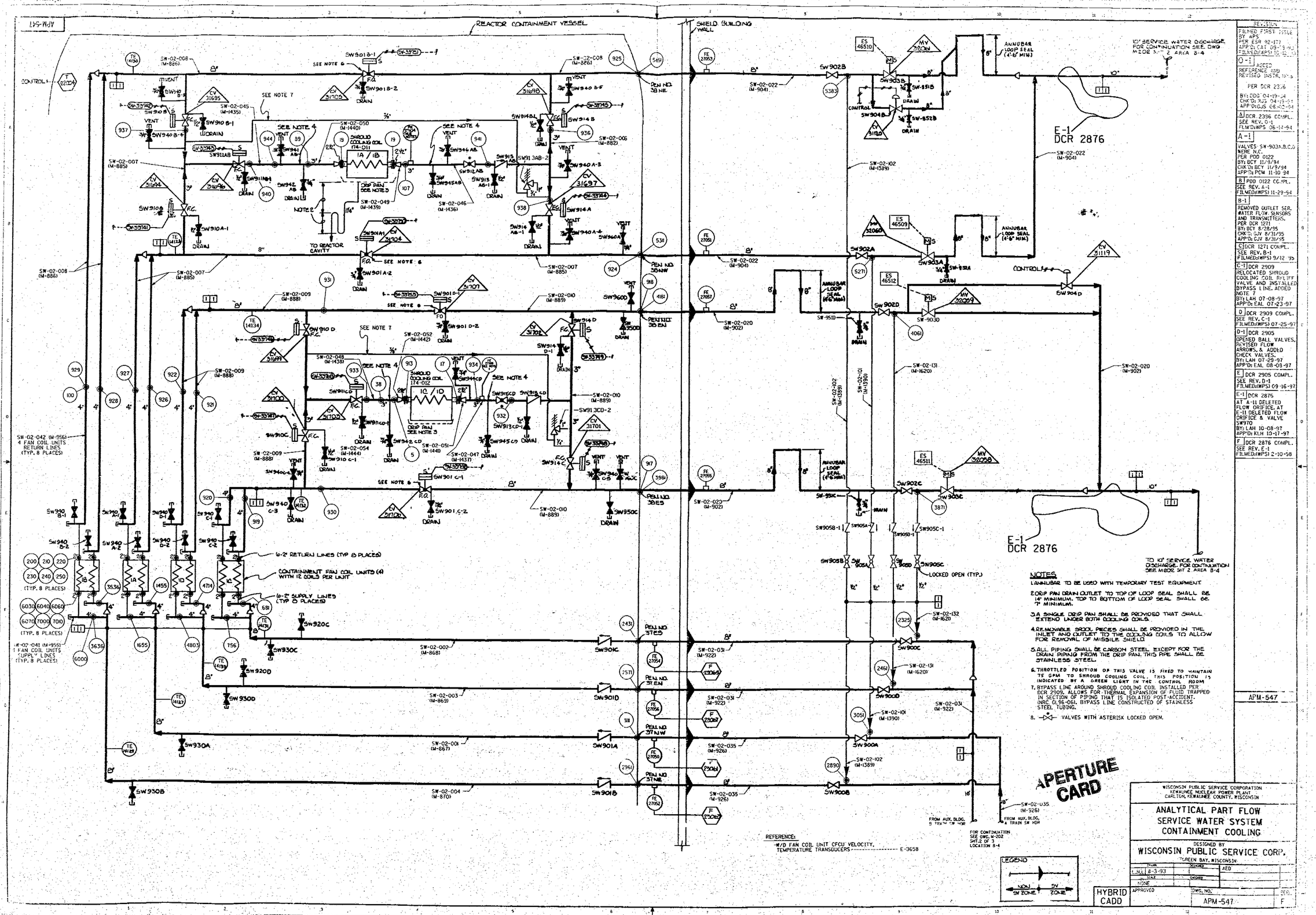

REVISION

FILMED FIRST ISSUE BY APS PER ESR 92-172 APP'D: CAT 09-3-92 FILMED:(APS) 10-12-93

0-1 ADDED REFERENCE AND REVISED INSTR. NOTE PER DCR 2316 BY: DDG 04-19-94 CHK'D: RJS 04-19-94 APP'D: GJS 06-13-94

A-1 DCR 2396 COMPL. SEE REV. 0-1 FILMED:WPS 06-14-94

A-1 VALVES SW-903A,B,C,D WERE N.C. PER PDD 0122 BY: BCY 11/9/94 CHK'D: BCY 11/9/94 APP'D: PCM 11-10-94

B PDD 0122 COMPL. SEE REV. A-1 FILMED:(WPS) 11-29-94

B-1 REMOVED OUTLET SER. WATER FLOW SENSORS AND TRANSMITTERS. PER DCR 1271 BY: BCY 8/28/95 CHK'D: GJV 8/31/95 APP'D: GJV 8/31/95

C DCR 1271 COMPL. SEE REV. B-1 FILMED:(WPS) 9/12/95

C-1 DCR 2909 RELOCATED SHROUD COOLING COIL RELIEF VALVE AND INSTALLED BYPASS LINE. ADDED NOTE 7 BY: LAH 07-08-97 APP'D: EAL 07-23-97

D DCR 2909 COMPL. SEE REV. C-1 FILMED:WPS) 07-25-97

D-1 DCR 2905 OPENED BALL VALVES. REVISED FLOW ARROWS, & ADDED CHECK VALVES. BY: LAH 07-29-97 APP'D: EAL 08-08-97

E DCR 2905 COMPL. SEE REV. D-1 FILMED:(WPS) 09-16-97

E-1 DCR 2876 AT A-11 DELETED FLOW ORIFICE. AT E-11 DELETED FLOW ORIFICE & VALVE SW970 BY: LAH 10-08-97 APP'D: KLH 10-17-97

F DCR 2876 COMPL. SEE REV. E-1 FILMED:(WPS) 2-10-98

NOTES

1. ANNUBAR TO BE USED WITH TEMPORARY TEST EQUIPMENT.
2. DRIP PAN DRAIN OUTLET TO TOP OF LOOP SEAL SHALL BE 14" MINIMUM. TOP TO BOTTOM OF LOOP SEAL SHALL BE 7" MINIMUM.
3. A SINGLE DRIP PAN SHALL BE PROVIDED THAT SHALL EXTEND UNDER BOTH COOLING COILS.
4. REMOVABLE SPOOL PIECES SHALL BE PROVIDED IN THE INLET AND OUTLET TO THE COOLING COILS TO ALLOW FOR REMOVAL OF MISSILE SHIELD.
5. ALL PIPING SHALL BE CARBON STEEL EXCEPT FOR THE DRAIN PIPING FROM THE DRIP PAN. THIS PIPE SHALL BE STAINLESS STEEL.
6. THROTTLED POSITION OF THIS VALVE IS FIXED TO MAINTAIN 75 GPM TO SHROUD COOLING COIL. THIS POSITION IS INDICATED BY A GREEN LIGHT IN THE CONTROL ROOM
7. BYPASS LINE AROUND SHROUD COOLING COIL INSTALLED PER DCR 2909. ALLOWS FOR THERMAL EXPANSION OF FLUID TRAPPED IN SECTION OF PIPING THAT IS ISOLATED POST-ACCIDENT. (NRC 0L96-061). BYPASS LINE CONSTRUCTED OF STAINLESS STEEL TUBING.
8. —⋈— VALVES WITH ASTERISK LOCKED OPEN.

APM-547

9808100211

50-305
Rec'd w/ ltr dtd 7/30/98
9808040232