TABLE OF CONTENTS

Section	Title	Page
3.0	**DESIGN OF STRUCTURES, COMPONENTS, EQUIPMENT, AND SYSTEMS**	
3.1	**CONFORMANCE WITH NRC GENERAL DESIGN CRITERIA**	**3.1-1**
3.1.1	INTRODUCTION	3.1-1
3.1.2	WBNP CONFORMANCE WITH GDCS	3.1-1
3.1.2.1	OVERALL REQUIREMENTS	3.1-1
3.1.2.2	PROTECTION BY MULTIPLE FISSION PRODUCT BARRIERS	3.1-5
3.1.2.3	PROTECTION AND REACTIVITY CONTROL SYSTEMS	3.1-12
3.1.2.4	FLUID SYSTEMS	3.1-17
3.1.2.5	REACTOR CONTAINMENT	3.1-30
3.1.2.6	FUEL AND RADIOACTIVITY CONTROL	3.1-35
3.2	**CLASSIFICATION OF STRUCTURES, SYSTEMS, AND COMPONENTS**	**3.2-1**
3.2.1	SEISMIC CLASSIFICATIONS	3.2-1
3.2.2	SYSTEM QUALITY GROUP CLASSIFICATION	3.2-1
3.2.2.1	CLASS A	3.2-2
3.2.2.2	CLASS B	3.2-2
3.2.2.3	CLASS C	3.2-2
3.2.2.4	CLASS D	3.2-2
3.2.2.5	RELATIONSHIP OF APPLICABLE CODES TO SAFETY CLASSIFICATION FOR MECHANICAL COMPONENTS	3.2-3
3.2.2.6	NONNUCLEAR SAFETY CLASS (NNS)	3.2-3
3.2.2.7	HEATING, VENTILATION AND AIR CONDITIONING (HVAC) SAFETY CLASSIFICATION	3.2-3
3.2.3	CODE CASES AND CODE EDITIONS AND ADDENDA	3.2-3
3.2.3.1	TVA DESIGN AND FABRICATION	3.2-3
3.2.3.2	PURCHASED MATERIALS AND COMPONENTS	3.2-4
3.3	**WIND AND TORNADO LOADING**	**3.3-1**
3.3.1	WIND LOADINGS	3.3-1
3.3.1.1	DESIGN WIND VELOCITY	3.3-1
3.3.1.2	DETERMINATION OF APPLIED FORCE	3.3-1
3.3.2	TORNADO LOADINGS	3.3-1
3.3.2.1	APPLICABLE DESIGN PARAMETERS	3.3-1
3.3.2.2	DETERMINATION OF FORCES ON STRUCTURES	3.3-2

TABLE OF CONTENTS

Section	Title	Page
3.3.2.3	ABILITY OF CATEGORY I STRUCTURES TO PERFORM DESPITE FAILURE OF STRUCTURES NOT DESIGNED FOR TORNADO LOADS	3.3-3
3.4	**WATER LEVEL (FLOOD) DESIGN**	**3.4-1**
3.4.1	FLOOD PROTECTION	3.4-1
3.4.2	ANALYSIS PROCEDURE	3.4-1
3.5	**MISSILE PROTECTION**	**3.5-1**
3.5.1	MISSILE SELECTION AND DESCRIPTION	3.5-2
3.5.1.1	INTERNALLY GENERATED MISSILES (OUTSIDE CONTAINMENT)	3.5-2
3.5.1.2	INTERNALLY GENERATED MISSILES (INSIDE CONTAINMENT)	3.5-5
3.5.1.3	TURBINE MISSILES	3.5-10
3.5.1.4	MISSILES GENERATED BY NATURAL PHENOMENA	3.5-23
3.5.1.5	MISSILES GENERATED BY EVENTS NEAR THE SITE.	3.5-23
3.5.1.6	AIRCRAFT HAZARDS	3.5-24
3.5.2	SYSTEMS TO BE PROTECTED	3.5-24
3.5.3	BARRIER DESIGN PROCEDURES	3.5-25
3.5.3.1	ADDITIONAL DIESEL GENERATOR BUILDING (AND OTHER CATEGORY I STRUCTURES ADDED AFTER JULY 1979)	3.5-28
3.5A	**ESTIMATES OF VELOCITIES OF JET PROPELLED MISSILES**	**3.5A-1**
3.6	**PROTECTION AGAINST DYNAMIC EFFECTS ASSOCIATED WITH THE POSTULATED RUPTURE OF PIPING**	**3.6-1**
3.6A	**PROTECTION AGAINST DYNAMIC EFFECTS ASSOCIATED WITH THE POSTULATED RUPTURE OF PIPING (EXCLUDING REACTOR COOLANT SYSTEM PIPING)**	**3.6-1**
3.6A.1	POSTULATED PIPING FAILURES IN FLUID SYSTEMS INSIDE AND OUTSIDE CONTAINMENT	3.6-8
3.6A.1.1	DESIGN BASES	3.6-8
3.6A.1.2	DESCRIPTION OF PIPING SYSTEM ARRANGEMENT	3.6-10
3.6A.1.3	SAFETY EVALUATION	3.6-10

TABLE OF CONTENTS

Section	Title	Page
3.6A.2	DETERMINATION OF BREAK LOCATIONS AND DYNAMIC EFFECTS ASSOCIATED WITH THE POSTULATED RUPTURE OF PIPING	3.6-11
3.6A.2.1	CRITERIA USED TO DEFINE BREAK AND CRACK LOCATION AND CONFIGURATION	3.6-11
3.6A.2.2	ANALYTICAL METHODS TO DEFINE FORCING FUNCTIONS AND RESPONSE MODELS	3.6-17
3.6A.2.3	DYNAMIC ANALYSIS METHODS TO VERIFY INTEGRITY AND OPERABILITY	3.6-21
3.6A.2.4	GUARD PIPE ASSEMBLY DESIGN CRITERIA	3.6-24
3.6A.2.5	SUMMARY OF DYNAMIC ANALYSIS RESULTS	3.6-25
3.6B	**PROTECTION AGAINST DYNAMIC EFFECTS ASSOCIATED WITH THE POSTULATED RUPTURE OF PIPING**	**3.6-26**
3.6B.1	BREAK LOCATIONS AND DYNAMIC EFFECTS ASSOCIATED WITH POSTULATED PRIMARY LOOP PIPE RUPTURE	3.6-26
3.6B.2	ANALYTICAL METHODS TO DEFINE FORCING FUNCTION AND RESPONSE MODELS	3.6-27
3.6B.3	DYNAMIC ANALYSIS OF THE REACTOR COOLANT LOOP PIPING EQUIPMENT SUPPORTS AND PIPE WHIP RESTRAINTS	3.6-29
3.7	**SEISMIC DESIGN**	**3.7-1**
3.7.1	SEISMIC INPUT	3.7-2
3.7.1.1	GROUND RESPONSE SPECTRA	3.7-2
3.7.1.2	DESIGN TIME HISTORIES	3.7-2
3.7.1.3	CRITICAL DAMPING VALUES	3.7-3
3.7.1.4	SUPPORTING MEDIA FOR SEISMIC CATEGORY I STRUCTURES	3.7-3
3.7.2	SEISMIC SYSTEM ANALYSIS	3.7-3
3.7.2.1	SEISMIC ANALYSIS METHODS	3.7-4
3.7.2.2	NATURAL FREQUENCIES AND RESPONSE LOADS FOR NSSS	3.7-21
3.7.2.3	PROCEDURES USED FOR MODELING	3.7-22
3.7.2.4	SOIL/STRUCTURE INTERACTION	3.7-23
3.7.2.5	DEVELOPMENT OF FLOOR RESPONSE SPECTRA	3.7-23
3.7.2.6	THREE COMPONENTS OF EARTHQUAKE MOTION	3.7-25
3.7.2.7	COMBINATION OF MODAL RESPONSES	3.7-26
3.7.2.8	INTERACTION OF NON-CATEGORY I STRUCTURES WITH SEISMIC CATEGORY I STRUCTURES	3.7-28

TABLE OF CONTENTS

Section	Title	Page
3.7.2.9	EFFECTS OF PARAMETER VARIATIONS ON FLOOR RESPONSE SPECTRA	3.7-29
3.7.2.10	USE OF CONSTANT VERTICAL LOAD FACTORS	3.7-29
3.7.2.11	METHODS USED TO ACCOUNT FOR TORSIONAL EFFECTS	3.7-29
3.7.2.12	COMPARISON OF RESPONSES - SET A VERSUS SET B	3.7-30
3.7.2.13	METHODS FOR SEISMIC ANALYSIS OF DAMS	3.7-30
3.7.2.14	DETERMINATION OF CATEGORY I STRUCTURE OVERTURNING MOMENTS	3.7-30
3.7.2.15	ANALYSIS PROCEDURE FOR DAMPING	3.7-31
3.7.3	SEISMIC SUBSYSTEM ANALYSIS	3.7-31
3.7.3.1	SEISMIC ANALYSIS METHODS FOR OTHER THAN NSSS	3.7-31
3.7.3.2	DETERMINATION OF NUMBER OF EARTHQUAKE CYCLES	3.7-32
3.7.3.3	PROCEDURE USED FOR MODELING	3.7-32
3.7.3.4	BASIS FOR SELECTION OF FREQUENCIES	3.7-34
3.7.3.5	USE OF EQUIVALENT STATIC LOAD METHOD OF ANALYSIS	3.7-35
3.7.3.6	THREE COMPONENTS OF EARTHQUAKE MOTION	3.7-35
3.7.3.7	COMBINATION OF MODAL RESPONSES	3.7-36
3.7.3.8	ANALYTICAL PROCEDURES FOR PIPING OTHER THAN NSSS	3.7-37
3.7.3.9	MULTIPLE SUPPORTED EQUIPMENT AND COMPONENTS WITH DISTINCT INPUTS	3.7-44
3.7.3.10	USE OF CONSTANT VERTICAL LOAD FACTORS	3.7-45
3.7.3.11	TORSIONAL EFFECTS OF ECCENTRIC MASSES	3.7-45
3.7.3.12	BURIED SEISMIC CATEGORY I PIPING SYSTEMS	3.7-45
3.7.3.13	INTERACTION OF OTHER PIPING WITH SEISMIC CATEGORY I PIPING	3.7-51
3.7.3.14	SEISMIC ANALYSES FOR FUEL ELEMENTS, CONTROL ROD ASSEMBLIES, CONTROL ROD DRIVES, AND REACTOR INTERNALS	3.7-51
3.7.3.15	ANALYSIS PROCEDURE FOR DAMPING	3.7-53
3.7.3.16	SEISMIC ANALYSIS AND QUALIFICATION OF CATEGORY I EQUIPMENT OTHER THAN NSSS	3.7-53
3.7.3.17	SEISMIC ANALYSIS AND DESIGN OF HVAC DUCT AND DUCT SUPPORT SYSTEMS	3.7-56
3.7.3.18	SEISMIC QUALIFICATION OF MAIN CONTROL ROOM SUSPENDED CEILING AND AIR DELIVERY COMPONENTS	3.7-60
3.7.4	SEISMIC INSTRUMENTATION PROGRAM	3.7-61

TABLE OF CONTENTS

Section	Title	Page
3.7.4.1	COMPARISON WITH REGULATORY GUIDE 1.12	3.7-61
3.7.4.2	LOCATION AND DESCRIPTION OF INSTRUMENTATION	3.7-61
3.7.4.3	CONTROL ROOM OPERATOR NOTIFICATION	3.7-63
3.7.4.4	CONTROLLED SHUTDOWN LOGIC	3.7-64
3.7.4.5	COMPARISON OF MEASURED AND PREDICTED RESPONSES	3.7-65
3.8	**DESIGN OF CATEGORY I STRUCTURES**	
3.8.1	**CONCRETE SHIELD BUILDING**	**3.8.1-1**
3.8.1.1	DESCRIPTION OF THE SHIELD BUILDING	3.8.1-1
3.8.1.1.1	EQUIPMENT HATCH DOORS AND SLEEVES	3.8.1-2
3.8.1.2	APPLICABLE CODES, STANDARDS, AND SPECIFICATIONS	3.8.1-3
3.8.1.3	LOADS AND LOADING COMBINATIONS	3.8.1-5
3.8.1.4	DESIGN AND ANALYSIS PROCEDURES	3.8.1-7
3.8.1.5	STRUCTURAL ACCEPTANCE CRITERIA	3.8.1-10
3.8.1.6	MATERIALS, QUALITY CONTROL AND SPECIAL CONSTRUCTION TECHNIQUES	3.8.1-11
3.8.1.6.1	MATERIALS	3.8.1-11
3.8.1.6.2	QUALITY CONTROL	3.8.1-11
3.8.1.6.3	CONSTRUCTION TECHNIQUES (HISTORICAL INFORMATION)	3.8.1-12
3.8.1.7	TESTING AND INSERVICE SURVEILLANCE REQUIREMENTS	3.8.1-13
3.8.2	**STEEL CONTAINMENT SYSTEM**	**3.8.2-1**
3.8.2.1	DESCRIPTION OF THE CONTAINMENT AND PENETRATIONS	3.8.2-1
3.8.2.1.1	DESCRIPTION OF THE CONTAINMENT	3.8.2-1
3.8.2.1.2	DESCRIPTION OF PENETRATIONS	3.8.2-1
3.8.2.2	APPLICABLE CODES, STANDARDS AND SPECIFICATIONS	3.8.2-3
3.8.2.2.1	CODES	3.8.2-3
3.8.2.2.2	DESIGN SPECIFICATION SUMMARY	3.8.2-4
3.8.2.2.3	NRC REGULATORY GUIDES	3.8.2-6
3.8.2.3	LOADS AND LOADING COMBINATIONS	3.8.2-7
3.8.2.3.1	DESIGN LOADS	3.8.2-7
3.8.2.3.2	LOADING CONDITIONS	3.8.2-9
3.8.2.4	DESIGN AND ANALYSIS PROCEDURES	3.8.2-12
3.8.2.4.1	INTRODUCTION	3.8.2-12

TABLE OF CONTENTS

Section	Title	Page
3.8.2.4.2	STATIC STRESS ANALYSIS	3.8.2-12
3.8.2.4.3	DYNAMIC SEISMIC ANALYSIS	3.8.2-13
3.8.2.4.4	NON-AXISYMMETRIC PRESSURE LOADING ANALYSIS	3.8.2-13
3.8.2.4.5	THERMAL ANALYSIS	3.8.2-14
3.8.2.4.6	PENETRATIONS ANALYSIS	3.8.2-15
3.8.2.4.7	INTERACTION OF CONTAINMENT AND ATTACHED EQUIPMENT	3.8.2-17
3.8.2.4.8	ANCHORAGE	3.8.2-17
3.8.2.5	STRUCTURAL ACCEPTANCE CRITERIA	3.8.2-18
3.8.2.5.1	MARGIN OF SAFETY	3.8.2-18
3.8.2.6	MATERIALS, QUALITY CONTROL, AND SPECIAL CONSTRUCTION TECHNIQUES	3.8.2-19
3.8.2.6.1	MATERIALS - GENERAL	3.8.2-19
3.8.2.6.2	CORROSION PROTECTION	3.8.2-22
3.8.2.6.3	PROTECTIVE COATINGS	3.8.2-24
3.8.2.6.4	TOLERANCES	3.8.2-24
3.8.2.6.5	VESSEL MATERIAL INSPECTION AND TEST	3.8.2-25
3.8.2.6.6	IMPACT TESTING	3.8.2-25
3.8.2.6.7	POST-WELD HEAT TREATMENT	3.8.2-25
3.8.2.6.8	WELDING	3.8.2-25
3.8.2.7	TESTING AND INSERVICE INSPECTION REQUIREMENTS	3.8.2-26
3.8.2.7.1	BOTTOM LINER PLATES TEST - HISTORICAL INFORMATION	3.8.2-26
3.8.2.7.2	VERTICAL WALL AND DOME TESTS - HISTORICAL INFORMATION	3.8.2-26
3.8.2.7.3	SOAP BUBBLE TESTS - HISTORICAL INFORMATION	3.8.2-26
3.8.2.7.4	OVERPRESSURE TESTS - HISTORICAL INFORMATION	3.8.2-26
3.8.2.7.5	LEAKAGE RATE TEST - HISTORICAL INFORMATION	3.8.2-26
3.8.2.7.6	OPERATIONAL TESTING - HISTORICAL INFORMATION	3.8.2-27
3.8.2.7.7	LEAK TESTING AIRLOCKS - HISTORICAL INFORMATION	3.8.2-27
3.8.2.7.8	PENETRATION TESTS - HISTORICAL INFORMATION	3.8.2-27
3.8.2.7.9	INSERVICE INSPECTION REQUIREMENTS	3.8.2-27
3.8.3	**CONCRETE INTERIOR STRUCTURE**	**3.8.3-1**
3.8.3.1	DESCRIPTION OF THE INTERIOR STRUCTURE	3.8.3-1
3.8.3.2	APPLICABLE CODES, STANDARDS AND SPECIFICATIONS	3.8.3-7

TABLE OF CONTENTS

Section	Title	Page
3.8.3.3	LOADS AND LOADING COMBINATIONS	3.8.3-13
3.8.3.4	DESIGN AND ANALYSIS PROCEDURES	3.8.3-16
3.8.3.5	STRUCTURAL ACCEPTANCE CRITERIA	3.8.3-31
3.8.3.6	MATERIALS, QUALITY CONTROL AND SPECIAL CONSTRUCTION TECHNIQUES	3.8.3-34
3.8.3.7	TESTING AND INSERVICE SURVEILLANCE REQUIREMENTS	3.8.3-38
3.8.3.8	ENVIRONMENTAL EFFECTS	3.8.3-38
3.8.4	**OTHER CATEGORY I STRUCTURES**	**3.8.4-1**
3.8.4.1	DESCRIPTION OF THE STRUCTURES	3.8.4-1
3.8.4.1.1	AUXILIARY-CONTROL BUILDING	3.8.4-1
3.8.4.2	APPLICABLE CODES, STANDARDS, AND SPECIFICATIONS	3.8.4-17
3.8.4.3	LOADS AND LOADING COMBINATIONS	3.8.4-21
3.8.4.4	DESIGN AND ANALYSIS PROCEDURES	3.8.4-23
3.8.4.5	STRUCTURAL ACCEPTANCE CRITERIA	3.8.4-35
3.8.4.6	MATERIALS, QUALITY CONTROL, AND SPECIAL CONSTRUCTION TECHNIQUES	3.8.4-37
3.8.4.7	TESTING AND INSERVICE SURVEILLANCE REQUIREMENTS	3.8.4-39
3.8.5	**FOUNDATIONS AND CONCRETE SUPPORTS**	**3.8.5-1**
3.8.5.1	DESCRIPTION OF FOUNDATIONS AND SUPPORTS	3.8.5-1
3.8.5.1.1	PRIMARY CONTAINMENT	3.8.5-1
3.8.5.1.2	FOUNDATIONS OF OTHER CATEGORY I STRUCTURES	3.8.5-1
3.8.5.2	APPLICABLE CODES, STANDARDS, AND SPECIFICATIONS	3.8.5-3
3.8.5.3	LOADS AND LOADING COMBINATIONS	3.8.5-4
3.8.5.4	DESIGN AND ANALYSIS PROCEDURE	3.8.5-4
3.8.5.4.1	PRIMARY CONTAINMENT FOUNDATION	3.8.5-4
3.8.5.4.2	AUXILIARY-CONTROL BUILDING	3.8.5-4
3.8.5.4.3	INTAKE PUMPING STATION	3.8.5-4
3.8.5.4.4	SOIL-SUPPORTED STRUCTURES	3.8.5-5
3.8.5.4.5	PILE SUPPORTED STRUCTURES	3.8.5-5
3.8.5.5	STRUCTURAL ACCEPTANCE CRITERIA	3.8.5-5
3.8.5.5.1	PRIMARY CONTAINMENT FOUNDATION	3.8.5-5
3.8.5.5.2	FOUNDATIONS OF OTHER CATEGORY I STRUCTURES	3.8.5-5
3.8.5.6	MATERIALS, QUALITY CONTROL, AND SPECIAL CONSTRUCTION TECHNIQUES	3.8.5-6

TABLE OF CONTENTS

Section	Title	Page
3.8.5.6.1	MATERIALS	3.8.5-6
3.8.5.6.2	QUALITY CONTROL	3.8.5-7
3.8.5.6.3	SPECIAL CONSTRUCTION TECHNIQUES	3.8.5-7
3.8.6	**CATEGORY I(L) CRANES**	**3.8.6-1**
3.8.6.1	POLAR CRANES	3.8.6-1
3.8.6.1.1	DESCRIPTION	3.8.6-1
3.8.6.1.2	APPLICABLE CODES, STANDARDS, AND SPECIFICATIONS	3.8.6-1
3.8.6.1.3	LOADS, LOADING COMBINATIONS, AND ALLOWABLE STRESSES	3.8.6-2
3.8.6.1.4	DESIGN AND ANALYSIS PROCEDURE	3.8.6-2
3.8.6.1.5	STRUCTURAL ACCEPTANCE CRITERIA	3.8.6-2
3.8.6.1.6	MATERIALS, QUALITY CONTROLS, AND SPECIAL CONSTRUCTION TECHNIQUES	3.8.6-3
3.8.6.1.7	TESTING AND IN-SERVICE SURVEILLANCE REQUIREMENTS	3.8.6-3
3.8.6.1.8	SAFETY FEATURES	3.8.6-3
3.8.6.2	AUXILIARY BUILDING CRANE	3.8.6-4
3.8.6.2.1	DESCRIPTION	3.8.6-4
3.8.6.2.2	APPLICABLE CODES, STANDARDS, AND SPECIFICATIONS	3.8.6-5
3.8.6.2.3	LOADS, LOADING COMBINATIONS, AND ALLOWABLE STRESSES	3.8.6-5
3.8.6.2.4	DESIGN AND ANALYSIS PROCEDURE	3.8.6-5
3.8.6.2.5	STRUCTURAL ACCEPTANCE CRITERIA	3.8.6-6
3.8.6.2.6	MATERIALS, QUALITY CONTROLS, AND SPECIAL CONSTRUCTION TECHNIQUES	3.8.6-6
3.8.6.2.7	TESTING AND IN-SERVICE SURVEILLANCE REQUIREMENTS	3.8.6-7
3.8.6.2.8	SAFETY FEATURES	3.8.6-7
3.8A	**SHELL TEMPERATURE TRANSIENTS**	**3.8A-1**
3.8B	**BUCKLING STRESS CRITERIA**	**3.8B-1**
3.8B.1	INTRODUCTION	3.8B-1
3.8B.2	SHELLS STIFFENED WITH CIRCUMFERENTIAL STIFFENERS	3.8B-1
3.8B.2.1	CIRCULAR CYLINDRICAL SHELLS UNDER AXIAL COMPRESSION	3.8B-1
3.8B.2.2	CIRCULAR CYLINDRICAL SHELLS IN CIRCUMFERENTIAL COMPRESSION	3.8B-2

TABLE OF CONTENTS

Section	Title	Page
3.8B.2.3	CIRCULAR CYLINDRICAL SHELLS UNDER TORSION	3.8B-2
3.8B.2.4	CIRCULAR CYLINDRICAL SHELLS UNDER BENDING	3.8B-3
3.8B.2.5	CIRCULAR CYLINDRICAL SHELL UNDER COMBINED LOADS	3.8B-4
3.8B.3	SHELLS STIFFENED WITH A COMBINATION OF CIRCUMFERENTIAL AND VERTICAL STIFFENERS	3.8B-5
3.8B.4	SPHERICAL SHELLS	3.8B-7
3.8B.2.1	THE CRITICAL BUCKLING STRESS IN THE SPHERICAL DOME, EXCEPT FOR EXTERNAL PRESSURE, WAS DETERMINED BY THE FOLLOWING EQUATION:	3.8B-7
3.8B.2.2	SPHERICAL SHELL UNDER COMBINED LOADS	3.8B-8
3.8B.3	FACTOR OF SAFETY	3.8B-8
3.8C	**DOCUMENTATION OF CB&I COMPUTER PROGRAMS**	**3.8C-1**
3.8C.1	INTRODUCTION	3.8C-1
3.8C.2	PROGRAM 1017-MODAL ANALYSIS OF STRUCTURES USING THE EIGEN VALUE TECHNIQUE	3.8C-1
3.8C.3	PROGRAM 1044-SEISMIC ANALYSIS OF VESSEL APPENDAGES	3.8C-1
3.8C.4	PROGRAM E1668-SPECTRAL ANALYSIS FOR ACCELERATION RECORDS DIGITIZED AT EQUAL INTERVALS	3.8C-3
3.8C.5	PROGRAM 1642-TRANSIENT PRESSURE BEAM ANALYSIS	3.8C-3
3.8C.6	PROGRAM E1623-POST PROCESSOR PROGRAM FOR PROGRAM E1374	3.8C-4
3.8C.7	PROGRAM E1374-SHELL DYNAMIC ANALYSIS	3.8C-5
3.8C.7.1	INTRODUCTION	3.8C-5
3.8C.8	PROGRAM E1622-LOAD GENERATION PREPROCESSOR FOR PROGRAM E1374	3.8C-6
3.8C.9	PROGRAM E1624 SPCGEN-SPECTRAL CURVE GENERATION	3.8C-7
3.8C.10	PROGRAM 781, METHOD OF MODELING VERTICAL STIFFENERS	3.8C-7
3.8C.11	PROGRAM 119-CHECK OF FLANGE DESIGN	3.8C-7
3.8C.12	PROGRAM 772-NOZZLE REINFORCEMENT CHECK	3.8C-7
3.8C.13	PROGRAM 1027-WRC 107 STRESS INTENSITIES AT LOADED ATTACHMENTS FOR SPHERES OR CYLINDERS WITH ROUND OR SQUARE ATTACHMENT	3.8C-8
3.8C.14	PROGRAM 1036M-STRESS INTENSITIES IN JUMBO INSERT PLATES	3.8C-8
3.8D	**COMPUTER PROGRAMS FOR STRUCTURAL ANALYSIS**	**3.8D-1**

TABLE OF CONTENTS

Section	Title	Page
3.8E	**CODES, LOAD DEFINITIONS AND LOAD COMBINATIONS FOR THE MODIFICATION AND EVALUATION OF EXISTING STRUCTURES AND FOR THE DESIGN OF NEW FEATURES ADDED TO EXISTING STRUCTURES AND THE DESIGN OF STRUCTURES INITIATED AFTER JULY 1979**	**3.8E-1**
3.8E.1	APPLICATION CODES AND STANDARDS	3.8E-1
3.8E.2	LOAD DEFINITIONS	3.8E-1
3.8E.3	LOAD COMBINATIONS - CONCRETE	3.8E-3
3.8E.4	LOAD COMBINATIONS - STRUCTURAL STEEL	3.8E-5
3.9	**MECHANICAL SYSTEMS AND COMPONENTS**	**3.9-1**
3.9.1	GENERAL TOPIC FOR ANALYSIS OF SEISMIC CATEGORY I ASME CODE AND NON-CODE ITEMS	3.9-1
3.9.1.1	DESIGN TRANSIENTS	3.9-1
3.9.1.2	COMPUTER PROGRAMS USED IN ANALYSIS AND DESIGN	3.9-1
3.9.1.3	EXPERIMENTAL STRESS ANALYSIS	3.9-3
3.9.1.4	CONSIDERATION FOR THE EVALUATION OF THE FAULTED CONDITION	3.9-3
3.9.2	DYNAMIC TESTING AND ANALYSIS	3.9-4
3.9.2.1	PREOPERATIONAL VIBRATION AND DYNAMIC EFFECTS TESTING ON PIPING	3.9-4
3.9.2.2	SEISMIC QUALIFICATION TESTING OF SAFETY-RELATED MECHANICAL EQUIPMENT	3.9-6
3.9.2.3	DYNAMIC RESPONSE ANALYSIS OF REACTOR INTERNALS UNDER OPERATIONAL FLOW TRANSIENTS AND STEADY-STATE CONDITIONS	3.9-8
3.9.2.4	PREOPERATIONAL FLOW-INDUCED VIBRATION TESTING OF REACTOR INTERNALS	3.9-10
3.9.2.5	DYNAMIC SYSTEM ANALYSIS OF THE REACTOR INTERNALS UNDER FAULTED CONDITIONS	3.9-12
3.9.2.6	CORRELATIONS OF REACTOR INTERNALS VIBRATION TESTS WITH THE ANALYTICAL RESULTS	3.9-21
3.9.3	ASME CODE CLASS 1, 2 AND 3 COMPONENTS, COMPONENT SUPPORTS AND CORE SUPPORT STRUCTURES	3.9-22
3.9.3.1	LOADING COMBINATIONS, DESIGN TRANSIENTS, AND STRESS LIMITS	3.9-22
3.9.3.2	PUMPS AND VALVE OPERABILITY ASSURANCE	3.9-29
3.9.3.3	DESIGN AND INSTALLATION DETAILS FOR MOUNTING OF PRESSURE RELIEF DEVICES	3.9-40

TABLE OF CONTENTS

Section	Title	Page
3.9.3.4	COMPONENT SUPPORTS	3.9-42
3.9.4	CONTROL ROD SYSTEM	3.9-47
3.9.4.1	DESCRIPTIVE INFORMATION OF CRDS	3.9-47
3.9.4.2	APPLICABLE CRDS DESIGN SPECIFICATIONS	3.9-47
3.9.4.3	DESIGN LOADINGS, STRESS LIMITS, AND ALLOWABLE DEFORMATIONS	3.9-47
3.9.4.4	CRDS PERFORMANCE ASSURANCE PROGRAM	3.9-47
3.9.5	REACTOR PRESSURE VESSEL INTERNALS	3.9-47
3.9.5.1	DESIGN ARRANGEMENTS	3.9-47
3.9.5.2	DESIGN LOADING CONDITIONS	3.9-48
3.9.5.3	DESIGN LOADING CATEGORIES	3.9-48
3.9.5.4	DESIGN CRITERIA BASIS	3.9-48
3.9.6	INSERVICE TESTING OF PUMPS AND VALVES	3.9-48
3.10	**SEISMIC DESIGN OF CATEGORY I INSTRUMENTATION AND ELECTRICAL EQUIPMENT**	**3.10-1**
3.10.1	SEISMIC QUALIFICATION CRITERIA	3.10-1
3.10.2	METHODS AND PROCEDURES FOR QUALIFYING ELECTRICAL EQUIPMENT AND INSTRUMENTATION	3.10-6
3.10.3	METHODS OF QUALIFYING TVA-DESIGNED SUPPORTS FOR ELECTRICAL EQUIPMENT INSTRUMENTATION AND CABLES	3.10-7
3.10.3.1	ELECTRICAL EQUIPMENT AND INSTRUMENTATION ASSEMBLIES	3.10-7
3.10.3.2	CABLE TRAYS AND SUPPORTS	3.10-7
3.10.3.3	CONDUIT AND SUPPORTS	3.10-8
3.10.3.4	CONDUIT BANKS	3.10-9
3.10.4	OPERATING LICENSE REVIEW	3.10-9
3.10.4.1	TVA SUPPLIED INSTRUMENTATION AND ELECTRICAL EQUIPMENT	3.10-9
3.11	**ENVIRONMENTAL DESIGN OF MECHANICAL AND ELECTRICAL EQUIPMENT**	**3.11-1**
3.11.1	EQUIPMENT IDENTIFICATION AND ENVIRONMENTAL CONDITIONS	3.11-1
3.11.1.1	IDENTIFICATION OF SAFETY SYSTEMS AND JUSTIFICATION	3.11-1
3.11.1.2	IDENTIFICATION OF EQUIPMENT IN HARSH ENVIRONMENTS	3.11-1
3.11.2	ENVIRONMENTAL CONDITIONS	3.11-2

TABLE OF CONTENTS

Section	Title	Page
3.11.2.1	HARSH ENVIRONMENT	3.11-2
3.11.2.2	MILD ENVIRONMENT	3.11-3
3.11.3	ELECTRICAL EQUIPMENT WITHIN THE SCOPE OF 10 CFR 50.49	3.11-3
3.11.4	QUALIFICATION TESTS AND ANALYSES	3.11-4
3.11.5	QUALIFICATION TEST RESULTS	3.11-4
3.11.6	LOSS OF HEATING, VENTILATING, AND AIR-CONDITIONING (HVAC)	3.11-4
3.11.7	ESTIMATED CHEMICAL AND RADIATION ENVIRONMENT	3.11-4
3.11.7.1	CHEMICAL SPRAY	3.11-4
3.11.7.2	RADIATION	3.11-5
3.12	**CONTROL OF HEAVY LOADS**	**3.12-1**
3.12.1	INTRODUCTION/LICECING BACKGROUND	3.12-1
3.12.2	SAFETY BASIS	3.12-1
3.12.3	SCOPE OF HEAVY LOAD HANDLING SYSTEM	3.12-1
3.12.4	CONTROL OF HEAVY LOADS PROGRAM	3.12-2
3.12.4.1	WBN COMMITMENTS IN RESPONSE TO NUREG-0612, SECTION 5.1.1	3.12-2
3.12.4.2	REACTOR PRESSURE VESSEL HEAD (RPVH) LIFTING PROCEDURES	3.12-4
3.12.5	SAFETY EVALUATION	3.12-6

LIST OF TABLES

Section	Title
TABLE 3.2-1	CATEGORY I STRUCTURES
TABLE 3.2-2	SUMMARY OF CRITERIA - MECHANICAL SYSTEM COMPONENTS
TABLE 3.2-2A	CLASSIFICATION OF SYSTEMS HAVING MAJOR DESIGN CONCERNS RELATED TO A PRIMARY SAFETY FUNCTION
TABLE 3.2-2B	CLASSIFICATION OF SYSTEMS NOT HAVING MAJOR DESIGN CONCERNS RELATED TO A PRIMARY SAFETY FUNCTION (SEE NOTE 2 BELOW)
TABLE 3.2-3	ELECTRICAL POWER SYSTEM EQUIPMENT DESIGNED TO OPERATE DURING AND AFTER A "SAFE SHUTDOWN EARTHQUAKE"
TABLE 3.2-4	SUMMARY OF CODES AND STANDARDS FOR SAFETY CLASS COMPONENTS OF THE WATTS BAR NUC LEAR PLANT CODE REQUIREMENTS
TABLE 3.2-5	NON-NUCLEAR SAFETY CLASSIFICATIONS
TABLE 3.2-6	TVA HEATING, VENTILATION, AND AIR CONDITIONING CLASSIFICATIONS
TABLE 3.2-7	CODE CASES AND PROVISIONS OF LATER CODE EDITIONS AND ADDENDA USED BY TVA FOR DESIGN AND FABRICATION
TABLE 3.5-1	SUMMARY OF POSTULATED CRDM MISSILE ANALYSIS
TABLE 3.5-2	TYPICAL POSTULATED VALVE MISSILE CHARACTERISTICS
TABLE 3.5-3	POSTULATED PIPING TEMPERATURE ELEMENT ASSEMBLY MISSILE CHARACTERISTICS
TABLE 3.5-4	CHARACTERISTICS OF OTHER MISSILES POSTULATED WITHIN REACTOR CONTAINMENT
TABLE 3.5-5	DELETED BY AMENDMENT 71; SEE SECTION 10.2.3.1
TABLE 3.5-6	TABULATED CALCULATION OF THE PROBABILITY OF EVENT H - THE RECEIPT OF UNACCEPTABLE DAMAGE
TABLE 3.5-7	TORNADO MISSILE SPECTRUM A FOR CATEGORY I STRUCTURES(1)
TABLE 3.5-8	TORNADO MISSILE SPECTRUM B DIESEL GENERATOR BUILDING EQUIPMENT DOORS(1)
TABLE 3.5-9	TORNADO MISSILE SPECTRUM C FOR CATEGORY I STRUCTURES(1)
TABLE 3.5-10	TABULATION OF THE PROBABILITY OF RECEIPT OF UNACCEPTABLE DAMAGE - PER CRITICAL STRUCTURE

LIST OF TABLES

Section	Title
TABLE 3.5-11	DELETED BY AMENDMENT 95
TABLE 3.5-12	DELETED BY AMENDMENT 95
TABLE 3.5-13	DELETED BY AMENEDMENT 95
TABLE 3.5-14	OUTDOOR SAFETY-RELATED FEATURES(1) (INCLUDING AIR INTAKES AND EXHAUSTS)
TABLE 3.5-15	DELETED BY AMENDMENT 95
TABLE 3.5-16	DELETED BY AMENDMENT 95
TABLE 3.5-17	TORNADO MISSILE SPECTRUM D(1)
TABLE 3.5-18	MINIMUM WALL AND ROOF THICKNESS REQUIREMENTS TO RESIST THE EFFECTS OF TORNADO MISSILE IMPACT(1)
TABLE 3.6-1	SUMMARY OF COMBINED STRESSES AT BREAK LOCATIONS - MAIN STEAM LINES (SHEET 1 OF 1)
TABLE 3.6-2	SUMMARY OF COMBINED STRESSES AT BREAK LOCATIONS - FEEDWATER LINES (SHEET 1 OF 2)
TABLE 3.6-3	SUMMARY OF COMBINED STRESSES AT BREAK LOCATIONS - AUXILIARY FEEDWATER SYSTEM STEAM SUPPLY LINES FOR UNIT 1 (SHEET 1 OF 1)
TABLE 3.6-3A	SUMMARY OF COMBINED STRESSES AT BREAK LOCATIONS - AUXILIARY FEEDWATER SYSTEM STEAM SUPPLY LINE FOR UNIT 2 (SHEET 1 OF 1)
TABLE 3.6-4	SUMMARY OF COMBINED STRESSES AT BREAK LOCATIONS - SI COLD LEG INJECTION (SHEET 1 OF 2)
TABLE 3.6-5	SUMMARY OF STRESSES AT BREAK LOCATIONS - RHR/SI HOT LEG RECIRCULATION, LOOP 4 (SHEET 1 OF 1)
TABLE 3.6-6	SUMMARY OF STRESSES AT BREAK LOCATIONS - SI HOT LEG RECIRCULATION LOOPS 1, 2, AND 3 (SHEET 1 OF 1)
TABLE 3.6-7	DELETED BY AMENDMENT 79
TABLE 3.6-8	DELETED PER AMENDMENT 64
TABLE 3.6-9	SUMMARY OF PROTECTION REQUIREMENTS - OUTSIDE CONTAINMENT4 - MAIN STEAM

LIST OF TABLES

Section	Title
TABLE 3.6-10	SUMMARY OF PROTECTION REQUIREMENTS - OUTSIDE CONTAINMENT4 - FEEDWATER
TABLE 3.7-1	PERIODS FOR SPECTRAL VALUES(1)
TABLE 3.7-2	STRUCTURAL DAMPING RATIOS USED IN ANALYSIS OF CATEGORY I STRUCTURES, SYSTEMS AND COMPONENTS
TABLE 3.7-2A	DELETED
TABLE 3.7-2B	DELETED
TABLE 3.7-3	SUPPORTING MEDIA FOR CATEGORY I STRUCTURES
TABLE 3.7-4	SHIELD BUILDING STRUCTURAL PROPERTIES (SET A)
TABLE 3.7-4A	LUMPED-MASS MODEL PROPERTIES OF SHIELD BUILDING MODEL (SET B AND SET C)
TABLE 3.7-5	SHIELD BUILDING NATURAL PERIODS
TABLE 3.7-5A	STEEL CONTAINMENT VESSEL ELEMENT PROPERTIES
TABLE 3.7-5B	STEEL CONTAINMENT VESSEL MASS POINT PROPERTIES
TABLE 3.7-5C	LUMPED-MASS MODEL PROPERTIES OF STEEL CONTAINMENT VESSEL MODEL
TABLE 3.7-6	INTERIOR CONCRETE ELEMENT PROPERTIES
TABLE 3.7-6A	LUMPED-MASS MODEL PROPERTIES OF INTERIOR CONCRETE STRUCTURE-HORIZONTAL MODEL - SET B AND SET C
TABLE 3.7-6B	LUMPED-MASS MODEL PROPERTIES OF INTERIOR CONCRETE STRUCTURE-VERTICAL MODEL - SET B AND SET C
TABLE 3.7-7	INTERIOR CONCRETE STRUCTURE - MASS POINT PROPERTIES (SET A)
TABLE 3.7-8	INTERIOR CONCRETE STRUCTURE - NORMAL MODES OF VIBRATION (SET A)
TABLE 3.7-9	AUXILIARY BUILDING ELEMENT PROPERTIES (SET A, SET B, AND SET C)
TABLE 3.7-9A	AUXILIARY BUILDING NODAL COORDINATES (SET B AND SET C)
TABLE 3.7-10	AUXILIARY BUILDING MASS POINT PROPERTIES (SET A, SET B, SET C)
TABLE 3.7-11	AUXILIARY BUILDING NATURAL PERIODS (SET A)
TABLE 3.7-12	NORTH STEAM VALVE ROOM ELEMENT PROPERTIES
TABLE 3.7-13	NORTH STEAM VALVE ROOM MASS POINT PROPERTIES

LIST OF TABLES

Section	Title
TABLE 3.7-13A	LUMPED-MASS MODEL PROPERTIES OF NORTH STEAM VALVE ROOM (NSVR) - HORIZONTAL MODEL (SET B, SET C)
TABLE 3.7-13B	LUMPED-MASS MODEL PROPERTIES OF NORTH STEAM VALVE ROOM (NSVR) - VERTICAL MODEL (SET B, SET C)
TABLE 3.7-14	NORTH STEAM VALVE ROOM NATURAL FREQUENCIES
TABLE 3.7-15	PUMPING STATION ELEMENT PROPERTIES
TABLE 3.7-15A	INTAKE PUMPING STATION BEAM ELEMENT PROPERTIES (SET B, SET C)
TABLE 3.7-16	PUMPING STATION MASS POINT PROPERTIES
TABLE 3.7-16A	INTAKE PUMPING STATION NODAL WEIGHT PROPERTIES (SET B AND SET C)
TABLE 3.7-16B	INTAKE PUMPING STATION NODAL COORDINATES (SET B AND SET C) (FEET UNITS)
TABLE 3.7-17	PUMPING STATION NATURAL PERIODS
TABLE 3.7-18	DIESEL-GENERATOR BUILDING ELEMENT PROPERTIES
TABLE 3.7-19	DIESEL-GENERATOR BUILDING MASS POINT PROPERTIES
TABLE 3.7-19A	LUMPED-MASS MODEL PROPERTIES OF DIESEL GENERATOR BUILDING - HORIZONTAL MODEL (SET B AND SET C)
TABLE 3.7-19B	LUMPED-MASS MODEL PROPERTIES OF DIESEL GENERATOR BUILDING - VERTICAL MODEL (SET B AND SET C)
TABLE 3.7-19C	LUMPED-MASS MODEL PROPERTIES OF REFUELING WATER STORAGE TANK - SEISMIC MODEL (SET B AND SET C)
TABLE 3.7-20	DIESEL-GENERATOR BUILDING NATURAL PERIODS
TABLE 3.7-21	WASTE-PACKAGING AREA ELEMENT PROPERTIES
TABLE 3.7-22	WASTE-PACKAGING AREA MASS POINT PROPERTIES
TABLE 3.7-23	WASTE-PACKAGING AREA NATURAL PERIODS
TABLE 3.7-23A	CDWE BUILDING SOIL DEPOSIT SHEAR MODULI AND SHEAR WAVE VELOCITIES
TABLE 3.7-23B	LUMPED-MASS MODEL PROPERTIES OF ADDITIONAL DIESEL GENERATOR BUILDING - HORIZONTAL MODEL
TABLE 3.7-23C	LUMPED-MASS MODEL PROPERTIES OF ADDITIONAL DIESEL GENERATOR BUILDING - VERTICAL MODEL
TABLE 3.7-24	DAMPING RATIOS FOR FLUID SYSTEM PIPING AND THEIR SUPPORTS ANALYZED BY NSSS VENDOR
TABLE 3.7-25	METHODS USED FOR SEISMIC ANALYSES OF CATEGORY I SYSTEMS AND COMPONENTS

LIST OF TABLES

Section	Title
TABLE 3.7-26	ALLOWABLE STRESSES FOR DUCT SUPPORTS
TABLE 3.8.1-1	(SHEET 1 OF 2) LOADING COMBINATIONS, LOAD FACTORS AND ALLOWABLE STRESSES FOR THE SHIELD BUILDING CONCRETE EXTERIOR CYLINDRICAL WALL, DOME AND BASE SLAB
TABLE 3.8.1-2	SHIELD BUILDING EQUIPMENT HATCH DOORS AND SLEEVE LOADS, LOADING COMBINATIONS, AND ALLOWABLE STRESSES
TABLE 3.8.2-1	ALLOWABLE STRESS CRITERIA - CONTAINMENT VESSEL (SHEET 1 OF 1)
TABLE 3.8.3-1	LOADING COMBINATIONS, LOAD FACTORS AND ALLOWABLE STRESSES FOR INTERIOR CONCRETE STRUCTURE (SHEET 1 OF 2)
TABLE 3.8.3-2	SUMMARY OF REPRESENTATIVE MAXIMUM STRESSES FOR THE INTERIOR CONCRETE STRUCTURE(1, 5)
TABLE 3.8.3-3	PERSONNEL ACCESS DOORS IN CRANE WALL LOADS, LOADING COMBINATIONS, AND ALLOWABLE STRESSES
TABLE 3.8.3-4	ICE CONDENSER ALLOWABLE LIMITS(3)
TABLE 3.8.3-5	SELECTION OF STEELS IN RELATION TO PREVENTION OF NON-DUCTILE FRACTURE OF ICE CONDENSER COMPONENTS(1)
TABLE 3.8.3-6	EQUIPMENT ACCESS HATCH SUMMARY OF ALLOWABLE STRESSES FOR DESIGN CONDITION
TABLE 3.8.3-7	ESCAPE HATCH - DIVIDER BARRIER FLOOR LOAD COMBINATIONS - ALLOWABLE STRESSES STRUCTURAL PARTS - (FY - 36,000 PSI) (SHEET 1 OF 2)
TABLE 3.8.3-8	AIR RETURN DUCT PENETRATION SUMMARY OF STRESSES FOR CONTROLLING DESIGN CONDITION DB LOCA - DL + SSE
TABLE 3.8.4-1	AUXILIARY-CONTROL BUILDING CONCRETE STRUCTURE LOADS, LOADING COMBINATIONS AND ALLOWABLE STRESSES
TABLE 3.8.4-2	AUXILIARY-CONTROL BUILDING STRUCTURAL STEEL LOADS, LOADING CONDITIONS AND ALLOWABLE STRESSES
TABLE 3.8.4.-3	CONTROL ROOM SHIELD DOORS LOADS, LOADING COMBINATIONS, AND ALLOWABLE STRESSES

LIST OF TABLES

Section	Title
TABLE 3.8.4-4	AUXILIARY BUILDING RAILROAD ACCESS HATCH COVERS LOADS, LOADING COMBINATIONS, AND ALLOWABLE STRESSES
TABLE 3.8.4-5	RAILROAD ACCESS DOOR LOADS, LOADING COMBINATIONS, AND ALLOWABLE STRESSES DOOR, EMBEDDED FRAME AND DOOR TRACK
TABLE 3.8.4-6	MANWAYS IN RHR SUMP VALVE ROOM LOADS, LOADING COMBINATIONS, AND ALLOWABLE STRESSES (PAGE 1 OF 2)
TABLE 3.8.4-7	PRESSURE CONFINING PERSONNEL DOORS LOADS, LOADING COMBINATIONS, AND ALLOWABLE STRESSES1 (ALL DOORS AS SHOWN IN TABLE 3.8.4-7A EXCEPT A55, A57, C20, C26, A101, A105, A216, AND A217)
TABLE 3.8.4-7A	LIST OF PERSONNEL ACCESS DOORS IN AUXILIARY / CONTROL BUILDING (PAGE 1 OF 1)
TABLE 3.8.4-7B	ABSCE AIR BOUNDARY DOORS (PAGE 1 OF 1)
TABLE 3.8.4-8	INTAKE PUMPING STATION LOADING CASES, ALLOWABLE STRESSES, FACTORS, FACTORS OF SAFETY, AND MATERIAL PROPERTIES
TABLE 3.8.4-9	CONCRETE RETAINING WALLS LOADING CASES ALLOWABLE STRESSES, FACTORS OF SAFETY, AND MATERIAL PROPERTIES
TABLE 3.8.4-10	SHEET PILE RETAINING WALL DESIGN LOADINGS, ALLOWABLE STRESSES, MATERIAL PROPERTIES
TABLE 3.8.4-11	TRAVELING WATER SCREENS (INTAKE PUMPING STATION) LOAD COMBINATIONS AND ALLOWABLE STRESSES
TABLE 3.8.4-12	DIESEL GENERATOR BUILDING LOADS, LOADING COMBINATIONS, ALLOWABLE STRESSES, AND MATERIAL PROPERTIES
TABLE 3.8.4-13	DIESEL GENERATOR BUILDING DOORS AND BULKHEADS LOADS, LOADING COMBINATIONS, AND ALLOWABLE STRESSES (PAGE 1 OF 2)
TABLE 3.8.4-14	DELETED BY AMENDMENT 39
TABLE 3.8.4-15	PRIMARY AND REFUELING WATER PIPE TUNNELS LOADS, LOAD COMBINATIONS, ALLOWABLE STRESSES, AND MATERIAL PROPERTIES
TABLE 3.8.4-16	CLASS 1E ELECTRIC SYSTEMS STRUCTURES LOADS, LOAD COMBINATIONS, ALLOWABLE STRESSES, AND MATERIAL PROPERTIES

LIST OF TABLES

Section	Title
TABLE 3.8.4-17	NORTH STEAM VALVE ROOM LOADING COMBINATIONS AND ALLOWABLE STRESSES
TABLE 3.8.4-18	NORTH STEAM VALVE ROOM STRUCTURAL STEEL LOADING COMBINATIONS AND ALLOWABLE STRESSES FOR STRUCTURAL STEEL
TABLE 3.8.4-19	ERCW STRUCTURES LOADS, LOAD COMBINATIONS, ALLOWABLE STRESSES, AND MATERIAL PROPERTIES
TABLE 3.8.4-20	REFUELING WATER STORAGE TANK FOUNDATION LOADS, LOAD COMBINATIONS AND MATERIAL PROPERTIES
TABLE 3.8.4-21	SPENT FUEL POOL GATES LOADS, LOADING COMBINATIONS, AND ALLOWABLE STRESSES
TABLE 3.8.4-22	ADDITIONAL DIESEL GENERATOR BUILDING LOADS, LOADING COMBINATIONS, DEFINITIONS OF LOAD TERMS
TABLE 3.8.4-23	WATERTIGHT EQUIPMENT HATCH COVERS LOADS, LOADING COMBINATIONS, AND ALLOWABLE STRESSES (PAGE 1 OF 2)
TABLE 3.8.6-1	POLAR CRANES LOADS, LOADING COMBINATIONS, AND ALLOWABLE STRESSES
TABLE 3.8.6-2	AUXILIARY BUILDING CRANE LOADS, LOADING COMBINATIONS, AND ALLOWABLE STRESSES
TABLE 3.8B-1	MULTIPLE LOAD COMBINATIONS VARIOUS PLANT CONDITIONS LOADING CONDITIONS
TABLE 3.8B-2	ALLOWABLE STRESS INTENSITIES PLUS BUCKLING LOAD FACTORS
TABLE 3.8D-1	BIAXIAL BENDING - USD
TABLE 3.8D-2	CONCRETE STRESS ANALYSIS
TABLE 3.8D-3	THERMCYL
TABLE 3.8D-4	TORSIONAL DYNANAL
TABLE 3.8D-5	DYNANAL
TABLE 3.8D-6	ROCKING DYNANAL
TABLE 3.8D-7	BAP222
TABLE 3.8D-8	DL42
TABLE 3.8D-9	PLTDL42
TABLE 3.8D-10	PNA 100 NOZZLE STRESSES (PEN X-57) NEXT TO SHELL
TABLE 3.8E-1	LIMITING VALUES OF ALLOWABLE STRESS

LIST OF TABLES

Section	Title
TABLE 3.9-1	DESIGN LOADING COMBINATIONS FOR ASME CODE CLASS 2 AND 3 COMPONENTS AND SUPPORTS ANALYZED BY WESTINGHOUSE, (EXCLUDING PIPE SUPPORTS) (A)
TABLE 3.9-2	STRESS CRITERIA FOR SAFETY RELATED ASME CLASS 2 AND 3 TANKS ANALYZED BY WESTINGHOUSE
TABLE 3.9-3	STRESS CRITERIA FOR CATEGORY I ASME CODE CLASS 2 AND CLASS 3 NONACTIVE PUMPS AND PUMP SUPPORTS ANALYZED BY WESTINGHOUSE
TABLE 3.9-4	STRESS CRITERIA FOR SAFETY RELATED ASME CODE CLASS 2 AND CLASS 3 VALVES ANALYZED BY WESTINGHOUSE
TABLE 3.9-5	MAXIMUM DEFLECTIONS UNDER DESIGN BASIS EVENT (IN)1,2,3,4
TABLE 3.9-6	DESIGN CRITERIA FOR ACTIVE PUMPS AND PUMP SUPPORTS ANALYZED BY WESTINGHOUSE
TABLE 3.9-7	LOAD SOURCES
TABLE 3.9-8	LOADING CONSTITUENTS AND STRESS LIMITS FOR ASME CLASS 1 PIPING
TABLE 3.9-9	LOADING CONSTITUENTS AND STRESS LIMITS FOR CATEGORY I ASME CLASS 2 AND 3 PIPING (SHEET 1 OF 2)
TABLE 3.9-10	LOADING CONSTITUENTS AND STRESS LIMITS FOR ACTIVE VALVE EVALUATION
TABLE 3.9-11	DELETED BY AMENDMENT 64
TABLE 3.9-12	DELETED BY AMENDMENT 64
TABLE 3.9-13A	DESIGN LOADS FOR CATEGORY I PIPING SUPPORTS
TABLE 3.9-13B	DESIGN LOADING COMBINATIONS FOR CATEGORY I ASME CODE CLASS 2 AND 3 LINE-MOUNTED*** COMPONENTS AND COMPONENT SUPPORTS ANALYZED BY TVA
TABLE 3.9-14	STRESS CRITERIA FOR CATEGORY I ASME CLASS 2 AND CLASS 3 TANKS ANALYZED BY TVA
TABLE 3.9-15	STRESS CRITERIA FOR CATEGORY I ASME CODE CLASS 2 AND CLASS 3 NONACTIVE PUMPS ANALYZED BY TVA
TABLE 3.9-16	STRESS CRITERIA FOR CATEGORY I ASME CODE CLASS 2 AND CLASS 3 NONACTIVE VALVES ANALYZED BY TVA
TABLE 3.9-17	ACTIVE VALVES FOR PRIMARY FLUID SYSTEMS
TABLE 3.9-18	STRESS LIMITS FOR ACTIVE CATEGORY I ASME CLASS 2 AND 3 PUMPS

LIST OF TABLES

Section	Title
TABLE 3.9-19	STRESS LIMITS FOR ACTIVE CATEGORY I ASME CLASS 2 AND 3 VALVES
TABLE 3.9-20	RELIEF VALVES IN CLASS 2 AUXILIARY SYSTEMS
TABLE 3.9-21	SUPPORT DESIGN ALLOWABLE STRESSES FOR CATEGORY I PIPING SUPPORTS
TABLE 3.9-22	DELETED BY AMENDMENT 51
TABLE 3.9-23	DELETED BY AMENDMENT 51
TABLE 3.9-24	DELETED BY AMENDMENT 51
TABLE 3.9-25	VALVES REQUIRED TO BE ACTIVE FOR DESIGN BASIS EVENTS
TABLE 3.9-26	INSERVICE INSPECTION CATEGORY VALVES
TABLE 3.9-27	ACTIVE SECTION III ASME-CODED COMPONENTS (EXCEPT VALVES) IN TVA SCOPE OF SUPPLY(1)
TABLE 3.9-28	ACTIVE PUMPS FOR PRIMARY FLUID SYSTEMS IN WESTINGHOUSE SCOPE OF SUPPLY AS APPLIED TO WATTS BAR NUCLEAR PLANT
TABLE 3.10-1	WBNP INSTRUMENTATION AND ELECTRICAL EQUIPMENT SEISMIC QUALIFICATION SUMMARY
TABLE 3.10-2	QUALIFICATION OF INSTRUMENTATION AND CONTROL EQUIPMENT
TABLE 3.10-3	WATTS BAR SEISMIC QUALIFICATIONS
TABLE 3.10-4	DELETED BY AMENDMENT 95
TABLE 3.10-5	ALLOWABLE STRESSES FOR CABLE TRAY SUPPORTS
TABLE 3.11-1	SYSTEMS (OR PORTIONS OF SYSTEMS) REQUIRED TO MITIGATE LOSS-OF-COOLANT ACCIDENTS AND/OR HIGH ENERGY LINE BREAKS
TABLE 3.11-2	COMPLIANCE WITH NRC CRITERIA AND STANDARDS

LIST OF TABLES

Section **Title**

THIS PAGE INTENTIONALLY BLANK

LIST OF FIGURES

Section	Title
FIGURE 3.3-1	VARIATIONS OF DIFFERENTIAL PRESSURE AND TANGENTIAL PLUS TRANSLATIONAL VELOCITY AS A FUNCTION OF THE DISTANCE FROM THE CENTER OF A TORNADO
FIGURE 3.5-1	ICE CONDENSER LOWER INLET DOOR OPENING, TYPICAL MISSILE TRAJECTORY ORIENTATION
FIGURE 3.5-2	PHYSICAL DIMENSIONS OF IMPORTANT POTENTIAL TURBINE MISSILES
FIGURE 3.5-3	TURBINE GENERATOR LOCATIONS
FIGURE 3.5-4	WATTS BAR NUCLEAR PLANT LAYOUT
FIGURE 3.5-5	CROSS-SECTIONAL ANALYSIS OF SUSCEPTIBILITY OF CRITICAL COMPONENTS TO UPWARD TURBINE MISSILE TRAJECTORIES
FIGURE 3.5-6	COMPARISON OF MISSILE FORMULAS (6-IN CYLINDRICAL MISSILE)
FIGURE 3.5-7	COMPARISON OF MISSILE FORMULAS (L6-IN CYLINDRICAL MISSILE)
FIGURE 3.5-8	DEPTH OF MISSILE PENETRATION FOR TORNADO (2-IN DIAMETER PIPE)
FIGURE 3.5-9	DEPTH OF MISSILE PENETRATION FOR TORNADO (2X4)
FIGURE 3.5-10	LP DISC MISSILES
FIGURE 3.5-11	LP CYLINDER & BLADE RING FRAGMENTS
FIGURE 3.6-1	SHAPE FACTORS
FIGURE 3.6-2	ISOMETRIC OF POSTULATED BREAK LOCATIONS (MAIN STEAM LINE FROM STEAM GENERATOR #1)
FIGURE 3.6-3	ISOMETRIC OF POSTULATED BREAK LOCATIONS (MAIN STEAM LINE FROM STEAM GENERATOR #2)
FIGURE 3.6-4	ISOMETRIC OF POSTULATED BREAK LOCATIONS (MAIN STEAM LINE FROM STEAM GENERATOR #3)
FIGURE 3.6-5	ISOMETRIC OF POSTULATED BREAK LOCATIONS (MAIN STEAM LINE FROM STEAM GENERATOR #4)
FIGURE 3.6-6	ISOMETRIC OF POSTULATED BREAK LOCATION (FEEDWATER LINE TO STEAM GENERATOR # 1)
FIGURE 3.6-7	ISOMETRIC OF POSTULATED BREAK LOCATION (FEEDWATER LINE TO STEAM GENERATOR # 2)
FIGURE 3.6-8	ISOMETRIC OF POSTULATED BREAK LOCATION

LIST OF FIGURES

Section	Title
	(FEEDWATER LINE TO STEAM GENERATOR # 3)
FIGURE 3.6-9	ISOMETRIC OF POSTULATED BREAK LOCATION (FEEDWATER LINE TO STEAM GENERATOR # 4)
FIGURE 3.6-10	ISOMETRIC OF POSTULATED BREAK LOCATIONS (AUXILIARY FEEDWATER STEAM SUPPLY LINES)
FIGURE 3.6-11	S.I. COLD LEG INJECTION LOOP 1 ISOMETRIC
FIGURE 3.6-12	S.I. COLD LEG INJECTION LOOP 4 ISOMETRIC
FIGURE 3.6-13	S.I. COLD LEG INJECTION LOOP 2 ISOMETRIC
FIGURE 3.6-14	ISOMETRIC OF POSTULATED BREAK LOCATIONS (SI COLD LEG INJECTION LOOP 3)
FIGURE 3.6-15	RHR/S.I. HOT LEG RECIRCULATION LOOP 4 ISOMETRIC
FIGURE 3.6-16	S.I. HOT LEG RECIRCULATION LOOP 2 ISOMETRIC
FIGURE 3.6-17	RHR HOT LEG RECIRCULATION LOOPS 1 AND 3 ISOMETRIC
FIGURE 3.6-18	DELETED BY AMENDMENT 79
FIGURE 3.6-19	DELETED -AMENDMENT 64
FIGURE 3.6-20	DELETED -AMENDMENT 64
FIGURE 3.6-21	MAIN STEAM LINE BREAK LOCATIONS OUTSIDE CONTAINMENT
FIGURE 3.6-22	MAIN STEAM LINE PIPE RUPTURE PROTECTION OUTSIDE CONTAINMENT
FIGURE 3.6-23	MAIN FEEDWATER LINE BREAK LOCATIONS OUTSIDE CONTAINMENT
FIGURE 3.6-24	MAIN FEEDWATER LINE PIPE RUPTURE PROTECTION OUTSIDE CONTAINMENT
FIGURE 3.7-1	SET A AND SET C SITE DESIGN RESPONSE SPECTRA SAFE SHUTDOWN EARTHQUAKE ROCK-SUPPORTED STRUCTURES 1/2% DAMPING
FIGURE 3.7-2	SET A AND SET C SITE DESIGN RESPONSE SPECTRA SAFE SHUTDOWN EARTHQUAKE ROCK-SUPPORTED STRUCTURES 1% DAMPING
FIGURE 3.7-3	SET A AND SET C SITE DESIGN RESPONSE SPECTRA SAFE SHUTDOWN EARTHQUAKE ROCK-SUPPORTED STRUCTURES 2% DAMPING
FIGURE 3.7-4	SET A AND SET C SITE DESIGN RESPONSE SPECTRA SAFE

LIST OF FIGURES

Section	Title
	SHUTDOWN EARTHQUAKE ROCK-SUPPORTED STRUCTURES 5% DAMPING
FIGURE 3.7-4A	SET B SITE SPECIFIC DESIGN RESPONSE SPECTRUM SAFE SHUTDOWN EARTHQUAKE (N-S) ROCK SUPPORTED STRUCTURES 1% DAMPING
FIGURE 3.7-4B	SET B SITE SPECIFIC DESIGN RESPONSE SPECTRUM SAFE SHUTDOWN EARTHQUAKE (N-S) ROCK SUPPORTED STRUCTURES 2% DAMPING
FIGURE 3.7-4C	SET B SITE SPECIFIC DESIGN RESPONSE SPECTRUM SAFE SHUTDOWN EARTHQUAKE (N-S) ROCK SUPPORTED STRUCTURES 3% DAMPING
FIGURE 3.7-4D	SET B SITE SPECIFIC DESIGN RESPONSE SPECTRUM SAFE SHUTDOWN EARTHQUAKE (N-S) ROCK SUPPORTED STRUCTURES 4% DAMPING
FIGURE 3.7-4E	SET B SITE SPECIFIC DESIGN RESPONSE SPECTRUM SAFE SHUTDOWN EARTHQUAKE (N-S) ROCK SUPPORTED STRUCTURES 5% DAMPING
FIGURE 3.7-4F	SET B SITE SPECIFIC RESPONSE SPECTRUM SAFE SHUTDOWN EARTHQUAKE (N-S) ROCK SUPPORTED STRUCTURES 7% DAMPING
FIGURE 3.7-4G	SPECIFIC DESIGN RESPONSE SPECTRUM SAFE SHUTDOWN EARTHQUAKE (E-W) ROCK SUPPORTED STRUCTURES 1% DAMPING
FIGURE 3.7-4H	SET B SITE SPECIFIC DESIGN RESPONSE SPECTRUM SAFE SHUTDOWN EARTHQUAKE (E-W) ROCK SUPPORTED STRUCTURES 2% DAMPING
FIGURE 3.7-4I	SET B SITE SPECIFIC DESIGN RESPONSE SPECTRUM SAFE SHUTDOWN EARTHQUAKE (E-W) ROCK SUPPORTED STRUCTURES 3% DAMPING
FIGURE 3.7-4J	SET B SITE SPECIFIC DESIGN RESPONSE SPECTRUM SAFE SHUTDOWN

LIST OF FIGURES

Section	Title
	EARTHQUAKE (E-W) ROCK SUPPORTED STRUCTURES 4% DAMPING
FIGURE 3.7-4K	SET B SITE SPECIFIC DESIGN RESPONSE SPECTRUM SAFE SHUTDOWN EARTHQUAKE (E-W) ROCK SUPPORTED STRUCTURES 5% DAMPING
FIGURE 3.7-4L	SET B SITE SPECIFIC DESIGN RESPONSE SPECTRUM SAFE SHUTDOWN EARTHQUAKE (E-W) ROCK SUPPORTED STRUCTURES 7% DAMPING
FIGURE 3.7-4M	SET B SITE SPECIFIC DESIGN RESPONSE SPECTRUM SAFE SHUTDOWN EARTHQUAKE (VERTICAL) ROCK SUPPORTED STRUCTURES 1% DAMPING
FIGURE 3.7-4N	SET B SITE SPECIFIC DESIGN RESPONSE SPECTRUM SAFE SHUTDOWN EARTHQUAKE (VERTICAL) ROCK SUPPORTED STRUCTURES 2% DAMPING
FIGURE 3.7-4O	SET B SITE SPECIFIC DESIGN RESPONSE SPECTRUM SAFE SHUTDOWN EARTHQUAKE (VERTICAL) ROCK SUPPORTED STRUCTURES 3% DAMPING
FIGURE 3.7-4P	SET B SITE SPECIFIC DESIGN RESPONSE SPECTRUM SAFE SHUTDOWN EARTHQUAKE (VERTICAL) ROCK SUPPORTED STRUCTURES 4% DAMPING
FIGURE 3.7-4Q	SET B SITE SPECIFIC DESIGN RESPONSE SPECTRUM SAFE SHUTDOWN EARTHQUAKE (VERTICAL) ROCK SUPPORTED STRUCTURES 5% DAMPING
FIGURE 3.7-4R	SET B SITE SPECIFIC DESIGN RESPONSE SPECTRUM SAFE SHUTDOWN EARTHQUAKE (VERTICAL) ROCK SUPPORTED STRUCTURES 7% DAMPING
FIGURE 3.7-4S	COMPARISONS OF H1 ARTIFICIAL TIME HISTORY PSDF WITH HORIZONTAL, 84TH PERCENTILE, AND MINIMUM REQUIRED, 84TH-PERCENTILE TARGET PSDFS
FIGURE 3.7-4T	COMPARISONS OF H2 ARTIFICIAL TIME HISTORY WITH HORIZONTAL, 84TH

LIST OF FIGURES

Section	Title
	PERCENTILE, AND MINIMUM REQUIRED, 84TH-PERCENTILE TARGET PSDFS
FIGURE 3.7-4U	COMPARISONS OF V ARTIFICIAL TIME HISTORY WITH VERTICAL, 84TH PERCENTILE, AND MINIMUM REQUIRED, 84TH- PERCENTILE TARGET PSDFS
FIGURE 3.7-5	LUMPED MASS MODEL FOR ANALYSIS OF CYLINDRICAL SHELL
FIGURE 3.7-5A	SEISMIC ANALYSIS MODEL FOR SHIELD BUILDING (SET B AND SET C)
FIGURE 3.7-6	FLOW CHART OF OPERATIONS FOR RESPONSE OF THE DOME
FIGURE 3.7-7	SHELL MODEL FOR DOME ANALYSIS-SHIELD BUILDING
FIGURE 3.7-7A	SEISMIC ANALYSIS HODEL FOR STEEL CONTAINMENT VESSEL (SET B AND SET C)
FIGURE 3.7-7B	CONTAINMENT VESSEL LUMPED MASS BEAM MODEL AND PROPERTIES
FIGURE 3.7-7C	SECTIONAL ELEVATION OF STEEL CONTAINMENT VESSEL AND LUMPED MASS MODEL FOR SEISMIC ANALYSIS
FIGURE 3.7-8	SECTIONAL ELEVATIONAL LOOKING NORTH LUMPED MASS MODEL FOR DYNAMIC ANALYSIS
FIGURE 3.7-8A	SEISMIC ANALYSIS MODEL FOR INTERIOR CONCRETE STRUCTURE (SET B AND SET C)
FIGURE 3.7-8B	SEISMIC ANALYSIS MODEL FOR INTERIOR CONCRETE STRUCTURE (SET B AND SET C)
FIGURE 3.7-8C	DYNAMIC MODEL FOR THE REACTOR PRESSURE VESSEL (RPV)
FIGURE 3.7-8D	DYNAMIC MODEL FOR THE REACTOR COOLANT LOOP 1
FIGURE 3.7-8E	DYNAMIC MODEL FOR THE REACTOR COOLANT LOOP 2
FIGURE 3.7-8F	DYNAMIC MODEL FOR THE REACTOR COOLANT LOOP 3
FIGURE 3.7-8G	DYNAMIC MODEL FOR THE REACTOR COOLANT LOOP 4
FIGURE 3.7-9	LUMPED MASS MODEL FOR DYNAMIC ANALYSIS-AUXILIARY CONTROL BUILDING
FIGURE 3.7-9A	ACB SEISMIC MODEL (SET B AND SET C)
FIGURE 3.7-10	SECTIONAL ELEVATION OF NORTH STEAM VALVE ROOM AND LUMPED MASS MODEL FOR SEISMIC ANALYSIS
FIGURE 3.7-10A	LUMPED-MASS STICK MODEL FOR THE NSVR

LIST OF FIGURES

Section	Title
	SUPERSTRUCTURE - YZ PLANE
FIGURE 3.7-10B	LUMPED-MASS STICK MODEL FOR THE NSVR SUPERSTRUCTURE - XZ PLANE
FIGURE 3.7-11	SECTIONAL ELEVATION OF INTAKE PUMPING STATION - LUMPED MASS MODEL FOR DYNAMIC ANALYSIS
FIGURE 3.7-11A	IPS SEISMIC MODEL
FIGURE 3.7-12	MATHEMATICAL MODEL FOR SOIL STRUCTURE INTERACTION
FIGURE 3.7-13	SECTIONAL ELEVATION OF DIESEL GENERATOR BUILDING LUMPED MASS MODEL FOR DYNAMIC ANALYSIS
FIGURE 3.7-13A	SEISMIC ANALYSIS MODEL FOR DIESEL GENERATOR BUILDING - YZ PLANE
FIGURE 3.7-13B	SEISMIC ANALYSIS MODEL FOR DIESEL GENERATOR BUILDING - XZ PLANE
FIGURE 3.7-13C	LUMPED-MASS STICK MODEL FOR REFUELING WATER STORAGE TANK
FIGURE 3.7-14	MATHEMATICAL MODEL FOR DYNAMIC ANALYSIS OF THE WASTE PACKAGING AREA
FIGURE 3.7-15	DELETED BY AMENDMENT 64
FIGURE 3.7-15A	CONDENSATE DEMINERALIZER WASTE EVAPORATOR BUILDING - LUMPED MODELS FOR NORMAL MODE ANALYSIS
FIGURE 3.7-15B	SEISMIC ANALYSIS MODEL FOR ADDITIONAL DIESEL GENERATOR BUILDING - YZ PLANE
FIGURE 3.7-15C	SEISMIC ANALYSIS MODEL FOR ADDITIONAL DIESEL GENERATOR BUILDING - XZ PLANE
FIGURE 3.7-15D	AUXILIARY CONTROL BUILDING - SET A VS. SET B ARS COMPARISON - OBE NORTH-SOUTH EL. 692.00
FIGURE 3.7-15E	AUXILIARY CONTROL BUILDING - SET A VS. SET B ARS COMPARISON - BE EAST-WEST EL. 692.0
FIGURE 3.7-15F	AUXILIARY CONTROL BUILDING - SET A VS. SET B ARS COMPARISON - OBE VERTICAL EL. 692.00
FIGURE 3.7-15G	AUXILIARY CONTROL BUILDING - SET A VS. SET B ARS COMPARISON - OBE NORTH-SOUTH EL. 814.25
FIGURE 3.7-15H	AUXILIARY CONTROL BUILDING - SET A VS. SET B ARS COMPARISON - OBE EAST-WEST E1. 814.25

LIST OF FIGURES

Section	Title
FIGURE 3.7-15I	AUXILIARY CONTROL BUILDING - SET A VS. SET B ARS COMPARISON - OBE VERTICAL E1. 814.25
FIGURE 3.7-16	DELETED - AMENDMENT 64
FIGURE 3.7-17	DELETED - AMENDMENT 64
FIGURE 3.7-18	DELETED - AMENDMENT 64
FIGURE 3.7-19	DELETED - AMENDMENT 64
FIGURE 3.7-20	DELETED - AMENDMENT 64
FIGURE 3.7-21	DELETED - AMENDMENT 64
FIGURE 3.7-22	DELETED - AMENDMENT 64
FIGURE 3.7-23	DELETED - AMENDMENT 64
FIGURE 3.7-24	DELETED - AMENDMENT 64
FIGURE 3.7-25	DELETED - AMENDMENT 64
FIGURE 3.7-26	DELETED - AMENDMENT 64
FIGURE 3.7-27	DELETED - AMENDMENT 64
FIGURE 3.7-28	DELETED - AMENDMENT 64
FIGURE 3.7-29	DELETED - AMENDMENT 64
FIGURE 3.7-30	DELETED - AMENDMENT 64
FIGURE 3.7-31	DELETED - AMENDMENT 64
FIGURE 3.7-32	DELETED - AMENDMENT 64
FIGURE 3.7-33	DELETED - AMENDMENT 64
FIGURE 3.7-34	DELETED - AMENDMENT 64
FIGURE 3.7-35	DELETED - AMENDMENT 64
FIGURE 3.7-36	DELETED - AMENDMENT 64
FIGURE 3.7-37	FLOW CHART FOR DEVELOPMENT OF FLOOR RESPONSE SPECTRA
FIGURE 3.7-38	DELETED - AMENDMENT 64
FIGURE 3.7-39	REACTOR, AUXILIARY, AND CONTROL BLDGS. - SEISMIC INSTRUMENTATION LOCATION OF SEISMIC INSTRUMENTS AND PERIPHERAL EQUIPMENT
FIGURE 3.7-40	REACTOR, AUXILIARY, AND CONTROL BUILDINGS SEISMIC INSTRUMENTATION LOCATION OF SEISMIC INSTRUMENTS AND PERIPHERAL EQUIPMENT
FIGURE 3.7-41	DIESEL GENORATOR BUILDING SEISMIC INSTRUMENTATION LOCATION OF SEISMIC

LIST OF FIGURES

Section	Title
	INSTRUMENTS AND PERIPHERAL EQUIPMENT
FIGURE 3.7-42	CONTROL BUILDING UNITS 1 AND 2 SEISMIC INSTRUMENTATION LOCATION OF SEISMIC INSTRUMENTS AND PERIPHERAL EQUIPMENT
FIGURE 3.7-43	CONTROL BUILDING UNITS 1 AND 2 SEISMIC INSTRUMENTATION LOCATION OF SEISMIC INSTRUMENTS AND PERIPHERAL EQUIPMENT
FIGURE 3.7-44	POWERHOUSE REACTOR UNIT 1 SEISMIC INSTRUMENTATION LOCATION OF SEISMIC INSTRUMENTS AND PERIPHERAL EQUIPMENT
FIGURE 3.7-45	POWERHOUSE REACTOR UNIT 1 SEISMIC INSTRUMENTATION LOCATION OF SEISMIC INSTRUMENTS AND PERIPHERAL EQUIPMENT
FIGURE 3.8.1-1	REACTOR BUILDING ELEVATION
FIGURE 3.8.1-2	REACTOR BUILDING UNITS 1 AND 2 CONCRETE STRUCTURAL SLAB ELEVATION 699.28 - OUTLINE
FIGURE 3.8.1-3	REACTOR BUILDING UNITS 1 AND 2 CONCRETE STRUCTURAL SLAB ELEVATION 699.28 OUTLINE
FIGURE 3.8.1-4	REACTOR BUILDING UNITS 1 AND 2 CONCRETE EXTERIOR WALL OUTLINE
FIGURE 3.8.1-5	CONCRETE EXTERIOR WALL OUTLINE
FIGURE 3.8.1-6	REACTOR BUILDINGS UNIT 1 AND 2 CONCRETE EXTERIOR WALL OUTLINE
FIGURE 3.8.1-7	REACTOR BUILDINGS UNIT 1 AND 2 CONCRETE DOME OUTLINE
FIGURE 3.8.1-8	REACTOR BUILDING UNITS 1 & 2 EQUIPMENT ACCESS DOORS ARRANGEMENT AND DETAILS
FIGURE 3.8.1-9	SHIELD BUILDING TEMPERATURE GRADIENT ELEVATION 728-745
FIGURE 3.8.2-1	STRUCTURAL STEEL CONTAINMENT VESSEL DESIGN DATA SHEET
FIGURE 3.8.2-2	REACTOR BUILDINGS UNITS 1 AND 2 STRUCTURAL STEEL CONTAINMENT VESSEL ANCHOR BOLT PLAN & BASE DETS - SHEET 1

LIST OF FIGURES

Section	Title
FIGURE 3.8.2-3	STRUCTURAL STEEL CONTAINMENT VESSEL INTERIOR ELEVATION - SHEET 2
FIGURE 3.8.2-4	REACTOR BUILDINGS UNITS 1 AND 2 EQUIPMENT ACCESS HATCH ARRANGEMENT AND DETAILS
FIGURE 3.8.2-5	REACTOR BUILDINGS UNITS 1 AND 2 PERSONNEL ACCESS LOCK ARRANGEMENT AND DETAILS
FIGURE 3.8.2-6	POWERHOUSE, AUXILIARY, REACTOR BUILDINGS UNITS 1 AND 2 MECHANICAL FUEL TRANSFER TUBE INSTALLATION
FIGURE 3.8.2-7	POWERHOUSE REACTOR BUILDINGS UNITS 1 AND 2 MECHANICAL CONTAINMENT PENETRATION
FIGURE 3.8.2-8	POWERHOUSE REACTOR BUILDING UNITS 1 - 2 MECHANICAL CONTAINMENT PENETRATIONS
FIGURE 3.8.2-9	DELETED BY AMENDMENT 64
FIGURE 3.8.2-10	TMD NODAL VOLUMES
FIGURE 3.8.2-11	TMD NODAL VOLUMES
FIGURE 3.8.2-12	CB & I CONTAINMENT SHELL MODEL
FIGURE 3.8.2-13	CB & I CONTAINMENT SHELL ANALYSIS FLOW MODEL
FIGURE 3.8.2-14	STRESS REDUCTION METHOD
FIGURE 3.8.3-1	REACTOR BUILDING UNITS 1 & 2 CONCRETE INTERIOR STRUCTURE OUTLINE
FIGURE 3.8.3-2	REACTOR BUILDING UNITS 1 & 2 CONCRETE INTERIOR STRUCTURE OUTLINE
FIGURE 3.8.3-3	REACTOR BUILDING UNITS 1 & 2 CONCRETE INTERIOR STRUCTURE OUTLINE
FIGURE 3.8.3-4	REACTOR BUILDING UNITS 1 & 2 CONCRETE INTERIOR STRUCTURE OUTLINE
FIGURE 3.8.3-5	REACTOR BUILDING UNITS 1 & 2 CONCRETE INTERIOR STRUCTURE OUTLINE
FIGURE 3.8.3-6	PLAN-UPPER COMPARTMENT; 1FT. = 0.3048M
FIGURE 3.8.3-7	PLAN-LOWER COMPARTMENT; 1FT. = 0.3048M
FIGURE 3.8.3-7A	REACTOR SHIELD WALL AND REFUELING CANAL - OUTLINE
FIGURE 3.8.3-7B	REACTOR BUILDING UNITS 1 & 2 CONCRETE REACTOR SHIELD WALL AND REFUELING CANAL - OUTLINE
FIGURE 3.8.3-7C	REACTOR BUILDING UNITS 1 & 2 CONCRETE REACTOR SHIELD WALL AND REFUELING CANAL - OUTLINE
FIGURE 3.8.3-7D	CONCRETE REACTOR SHIELD WALL AND REFUELING

LIST OF FIGURES

Section	Title
	CANAL - OUTLINE
FIGURE 3.8.3-7E	REACTOR BUILDING UNITS 1 & 2 MISCELLANEOUS STEEL REACTOR CAVITY EMBEDDED PARTS -SHEET 2
FIGURE 3.8.3-7F	REACTOR BUILDING UNITS 1 & 2 MISCELLANEOUS STEEL REACTOR CAVITY EMBEDDED PARTS - SHEET 3
FIGURE 3.8.3-7G	REACTOR BUILDING UNITS 1 & 2 MISCELLANEOUS STEEL REACTOR CAVITY EMBEDDED PARTS - SHEET 4
FIGURE 3.8.3-8	REACTOR BUILDING UNITS 1 & 2 PERSONNEL ACCESS DOORS THRU CRANE WALL DOORS - ARRANGEMENT
FIGURE 3.8.3-9	REACTOR BUILDING UNITS 1 & 2 PERSONNEL ACCESS DOORS THRU CRANE WALL DOOR - STRUCTURAL DETAILS
FIGURE 3.8.3-10	REACTOR BUILDING UNITS 1 & 2 PERSONNEL ACCESS DOORS THRU CRANE WALL DOORS MISC. DETAILS
FIGURE 3.8.3-11	REACTOR BUILDING UNITS 1 & 2 PERSONNEL ACCESS DOORS THRU CRANE WALL EMBEDDED FRAME
FIGURE 3.8.3-12	REACTOR BUILDING UNITS 1 & 2 ESCAPE HATCHES
FIGURE 3.8.3-13	REACTOR BUILDING UNITS 1 & 2 CONCRETE FLOOR - EL.756.63 OUTLINE
FIGURE 3.8.3-14	REACTOR BUILDING UNITS 1 & 2 MISCELLANEOUS STEEL REACTOR WELL HANDRAIL & MISSILE SHIELD ANCHOR BOLTS - EL 756.63
FIGURE 3.8.3-15	REACTOR BUILDING UNITS 1 & 2 MISCELLANEOUS STEEL FRAMES, GRATING AND EMB PARTS EL. 756.63 - SHEET 1
FIGURE 3.8.3-16	REACTOR BUILDING UNITS 1 & 2 MISCELLANEOUS STEEL FRAMES, GRATING AND EMB PARTS EL. 756.63 - SHEET 2
FIGURE 3.8.3-17	REACTOR BUILDING UNITS 1 & 2 MISCELLANEOUS STEEL SHIELD PLUGS & FRAMES EL. 756.63
FIGURE 3.8.3-18	REACTOR BUILDING UNITS 1 & 2 MISCELLANEOUS STEEL HATCH FRAME AND COVER EL. 756.63
FIGURE 3.8.3-19	TYPICAL DIVIDER FLOOR LOCA TEMPERATURE GRADIENTS
FIGURE 3.8.3-20	REACTOR BUILDING UNITS 1 & 2 CONCRETE STEAM GENERATOR AND PRESSURIZER ENCLOSURE - OUTLINE
FIGURE 3.8.4-1	CONCRETE GENERAL OUTLINE FEATURES
FIGURE 3.8.4-2	REACTOR, AUXILIARY & CONTROL BUILDINGS GENERAL OUTLINE FEATURES
FIGURE 3.8.4-3	CONCRETE GENERAL OUTLINE FEATURES
FIGURE 3.8.4-4	REACTOR, AUXILIARY & CONTROL BUILDINGS CONCRETE

LIST OF FIGURES

Section	Title
	GENERAL OUTLINE FEATURES
FIGURE 3.8.4-5	CONCRETE GENERAL OUTLINE FEATURES
FIGURE 3.8.4-6	REACTOR, AUXILIARY & CONTROL BUILDINGS CONCRETE GENERAL OUTLINE FEATURES
FIGURE 3.8.4-7	REACTOR, AUXILIARY & CONTROL BUILDINGS CONCRETE GENERAL OUTLINE FEATURES
FIGURE 3.8.4-8	REACTOR, AUXILIARY & CONTROL BUILDINGS CONCRETE GENERAL OUTLINE FEATURES
FIGURE 3.8.4-9	REACTOR, AUXILIARY & CONTROL BUILDINGS CONCRETE FLOOR DESIGN DATA
FIGURE 3.8.4-10	AUXILIARY BUILDINGS UNITS 1 & 2 RAILWAY ACCESS HATCH ARRANGEMENT & DETAILS (SHEET 1)
FIGURE 3.8.4-11	AUXILIARY BUILDING UNITS 1 & 2 RAILWAY ACCESS HATCH ARRANGEMENT AND DETAILS (SHEET 2)
FIGURE 3.8.4-12	AUXILIARY BUILDING UNITS 1 & 2 RAILWAY ACCESS DOOR ARRANGEMENT
FIGURE 3.8.4-13	AUXILIARY BUILDING UNITS 1 & 2 RAILWAY ACCESS DOORS DETAILS
FIGURE 3.8.4-14	AUXILIARY BUILDING UNITS 1 & 2 RAILWAY ACCESS DOORS FRAME DETAILS
FIGURE 3.8.4-15	AUXILIARY BUILDING UNITS 1 & 2 RAILWAY ACCESS DOORS HOIST MACHINERY ENCLOSURE DETAILS
FIGURE 3.8.4-16	RHR SUMP VALVE ROOM MANWAYS
FIGURE 3.8.4-17	POWERHOUSE, AUXILIARY REACTOR, & CONTROL BUILDINGS ARCHITECTURAL PLAN ELEVATION 708.0 AND 713.0
FIGURE 3.8.4-18	POWERHOUSE, AUXILIARY REACTOR, & CONTROL BUILDINGS ARCHITECTURAL PLAN ELEVATION 729.0 AND 737.0
FIGURE 3.8.4-19	ARCHITECTURAL PLAN ELEVATION 755.0 AND 757.0
FIGURE 3.8.4-20	POWERHOUSE, AUXILIARY REACTOR, & CONTROL BUILDINGS ARCHITECTURAL PLAN ELEVATION 772.0, 782.0 AND 786.0
FIGURE 3.8.4-21	POWERHOUSE AUXILIARY BUILDING PRESSURE CONFINING PERSONNEL DOORS ARRANGEMENT AND DETAILS (SHEET 1)
FIGURE 3.8.4-22	POWERHOUSE AUXILIARY BUILDING PRESSURE CONFINING PERSONNEL DOORS ARRANGEMENT AND DETAILS (SHEET

LIST OF FIGURES

Section	Title
	2)
FIGURE 3.8.4-23	POWERHOUSE AUXILIARY BUILDING PRESSURE CONFINING PERSONNEL DOORS ARRANGEMENT AND DETAILS (SHEET 3)
FIGURE 3.8.4-24	YARD-DIESEL GENERATOR BUILDING CONCRETE FLOORS AND WALLS OUTLINE (SHEET 1)
FIGURE 3.8.4-25	YARD-DIESEL GENERATOR BUILDING CONCRETE FLOORS AND WALLS OUTLINE (SHEET 2)
FIGURE 3.8.4-26	YARD-DIESEL GENERATOR BUILDING CONCRETE FLOORS AND WALLS OUTLINE (SHEET 3)
FIGURE 3.8.4-27	YARD-DIESEL GENERATOR BUILDING CONCRETE FLOOR AND WALLS OUTLINE (SHEET 4)
FIGURE 3.8.4-28	DIESEL GENERATOR BUILDING FLOOR AND WALL OUTLINE (SHEET 5)
FIGURE 3.8.4-29	YARD-DIESEL GENERATOR BUILDING CONCRETE FLOORS AND WALLS OUTLINE (SHEET 6)
FIGURE 3.8.4-30	DIESEL GENERATOR BUILDING UNITS 1 & 2 DOORS & BULKHEAD ARRANGEMENT
FIGURE 3.8.4-31	DIESEL GENERATOR BUILDING UNITS 1 & 2 DOORS AND BULKHEAD DETAILS (SHEET 1)
FIGURE 3.8.4-32	DIESEL GENERATOR BUILDING DOORS AND BULKHEAD DETAILS (SHEET 2)
FIGURE 3.8.4-33	YARD-DIESEL GENERATOR BUILDING CONCRETE FLOORS AND WALLS OUTLINE (SHEET 7)
FIGURE 3.8.4-34	DELETED -AMENDMENT 62
FIGURE 3.8.4-35	AUXILIARY BUILDING UNITS 1 & 2 CONCRETE PIPE TUNNELS AND TANK FOUNDATIONS OUTLINE (SHEET 1)
FIGURE 3.8.4-36	AUXILIARY BUILDING UNITS 1 & 2 CONCRETE PIPE TUNNELS AND TANK FOUNDATIONS OUTLINE (SHEET 2)
FIGURE 3.8.4-36A	AUXILIARY BUILDING UNITS 1 & 2 CONCRETE PIPE TUNNELS AND TANK FOUNDATIONS OUTLINE
FIGURE 3.8.4-36B	AUXILIARY BUILDING UNITS 1 & 2 CONCRETE PIPE TUNNELS AND TANK FOUNDATIONS
FIGURE 3.8.4-36C	AUXILIARY BUILDING UNITS 1 & 2 CONCRETE PIPE TUNNELS AND TANK FOUNDATIONS OUTLINE
FIGURE 3.8.4-37	YARD UNITS 1 & 2 CONCRETE MANHOLES AND DUCT RUNS OUTLINE AND REINFORCEMENT

LIST OF FIGURES

Section	Title
FIGURE 3.8.4-38	YARD UNITS 1 & 2 CONCRETE MANHOLES OUTLINE AND REINFORCEMENT (SHEET 1)
FIGURE 3.8.4-39	YARD UNITS 1 & 2 CONCRETE MANHOLES OUTLINE AND REINFORCEMENT (SHEET 2)
FIGURE 3.8.4-40	YARD UNITS 1 & 2 CONCRETE MANHOLES 4A-8A &5B-9B OUTLINE AND REINFORCEMENT (SHEET 3)
FIGURE 3.8.4-41	YARD UNITS 1 & 2 CONCRETE MANHOLE 4B OUTLINE AND REINFORCEMENT (SHEET 4)
FIGURE 3.8.4-42	YARD UNITS 1 & 2 CONCRETE MANHOLES OUTLINE AND REINFORCEMENT (SHEET 5)
FIGURE 3.8.4-43	MANHOLES OUTLINE AND REINFORCEMENT (SHEET 6)
FIGURE 3.8.4-44	YARD UNITS 1 & 2 CONCRETE MANHOLES 20, 21, 24 & 25 OUTLINE & REINFORCEMENT
FIGURE 3.8.4-45	YARD UNITS 1 & 2 CONCRETE MANHOLES 18, 19, 22, 23, 26 & 27 OUTLINE & REINFORCEMENT
FIGURE 3.8.4-46	YARD UNITS 1 & 2 CONCRETE MANHOLES & DUCT RUNS OUTLINE & REINFORCEMENT
FIGURE 3.8.4-46A	YARD UNITS 1 & 2 CONCRETE ERCW STRUCTURES OUTLINE AND REINFORCEMENT
FIGURE 3.8.4-47	AUXILIARY BUILDING UNITS 1 & 2 CONCRETE - NORTH STEAM VALVE ROOM OUTLINE
FIGURE 3.8.4-48	AUXILIARY BUILDING UNITS 1 & 2 CONCRETE - NORTH STEAM VALVE ROOM OUTLINE
FIGURE 3.8.4-49	AUXILIARY BUILDING UNITS 1 & 2 MISCELLANEOUS STEEL ACCESS PLATFORMS - MAIN STEAM VALVE ROOMS
FIGURE 3.8.4-49A	STRUCTURAL STEEL MAIN STEAM VALVE ROOM FRAMING AND ROOF DECKING
FIGURE 3.8.4-49B	DELETED BY AMENDMENT 79
FIGURE 3.8.4-49C	MECHANICAL MAIN STEAM RELIEF & SAFETY VALVE VENTS
FIGURE 3.8.4-50	INTAKE PUMPING STATION GENERAL OUTLINE FEATURE (SHEET 1)
FIGURE 3.8.4-51	WATER SUPPLY UNITS 1 & 2 INTAKE PUMPING STATION CONCRETE GENERAL OUTLINE FEATURE (SHEET 2)
FIGURE 3.8.4-52	WATER SUPPLY UNITS 1 & 2 INTAKE PUMPING STATION TRAVELING SCREENS ARRANGEMENT
FIGURE 3.8.4-53	WATER SUPPLY UNITS 1 & 2 CONCRETE RETAINING WALL

LIST OF FIGURES

Section	Title
	AT INTAKE PUMPING STATION - OUTLINE AND REINFORCEMENT
FIGURE 3.8.4-54	WATER SUPPLY UNITS 1 & 2 CONCRETE RETAINING WALL AT INTAKE PUMPING STATION - OUTLINE AND REINFORCEMENT
FIGURE 3.8.4-55	CONCRETE - RETAINING WALL AT INTAKE PUMPING STATION - OUTLINE AND REINFORCEMENT
FIGURE 3.8.4-56	YARD UNITS 1 & 2 CONCRETE ERCW STRUCTURES OUTLINE & REINFORCEMENT
FIGURE 3.8.4-56A	YARD UNITS 1 & 2 CONCRETE ERCW STRUCTURES OUTLINE & REINFORCEMENT
FIGURE 3.8.4-56B	YARD UNITS 1 & 2 CONCRETE ERCW STRUCTURES OUTLINE & REINFORCEMENT
FIGURE 3.8.4-56C	YARD UNITS 1 & 2 CONCRETE ERCW STRUCTURES OUTLINE & REINFORCEMENT
FIGURE 3.8.4-57	AUXILIARY BUILDING UNIT 1 CONCRETE ADDITIONAL EQUIPMENT BUILDING OUTLINE (SHEET 1)
FIGURE 3.8.4-58	AUXILIARY BUILDING UNIT 1 CONCRETE ADDITIONAL EQUIPMENT BUILDING OUTLINE (SHEET 2)
FIGURE 3.8.4-59	AUXILIARY BUILDING UNIT 1 CONCRETE ADDITIONAL EQUIPMENT BUILDING OUTLINE (SHEET 3)
FIGURE 3.8.4-60	CONCRETE PARTITION WALLS OUTLINE AND REINFORCEMENT (SHEET 1)
FIGURE 3.8.4-61	AUXILIARY BUILDING PARTITION WALLS (SHEET 2)
FIGURE 3.8.4-62	AUXILIARY BUILDING UNITS 1 & 2 CONCRETE PARTITION WALLS OUTLINE AND REINFORCEMENT
FIGURE 3.8.4-63	AUXILIARY BUILDING UNITS 1 & 2 CONCRETE PARTITION WALLS OUTLINE AND REINFORCEMENT
FIGURE 3.8.4-64	AUXILIARY BUILDING PARTITION WALLS (SHEET 5)
FIGURE 3.8.4-65	AUXILIARY BUILDING UNITS 1 & 2 CONCRETE PARTITION WALLS OUTLINE AND REINFORCEMENT
FIGURE 3.8.4-66	GENERAL LOCATION OF SETTLEMENT STATIONS
FIGURE 3.8.4-67	GENERAL LOCATION OF SETTLEMENT STATIONS
FIGURE 3.8.4-68	STRUCTURAL STEEL ERCW INTAKE PUMPING STATION MISSILE PROTECTION FRAMING (SHEET 2)
FIGURE 3.8.4-69	SPENT FUEL POOL FUEL POOL GATES ARRANGEMENTS
FIGURE 3.8.4-70	AUXILIARY BUILDING UNITS 1 & 2 SPENT FUEL POOL FUEL

LIST OF FIGURES

Section	Title
	POOL GATES STRUCTURAL DETAILS
FIGURE 3.8.4-71	SPENT FUEL POOL FUEL POOL GATES SEAL DETAILS
FIGURE 3.8.4-72	ADDITIONAL DIESEL GENERATOR BUILDING CONCRETE PILE SUPPORTED FOUNDATION
FIGURE 3.8.4-73	YARD - ADDITIONAL DIESEL GENERATOR BUILDING CONCRETE FLOOR EL. 742.0 OUTLINE
FIGURE 3.8.4-74	YARD ADDITIONAL DIESEL GENERATOR BUILDING CONCRETE EXTERIOR WALLS OUTLINE
FIGURE 3.8.4-75	YARD - ADDITIONAL DIESEL GENERATOR BUILDING CONCRETE EXTERIOR WALLS OUTLINE
FIGURE 3.8.4-76	YARD - ADDITIONAL DIESEL GENERATOR BUILDING CONCRETE INTERIOR WALLS - FLOOR EL. 742.0 OUTLINE
FIGURE 3.8.4-77	YARD - ADDITIONAL DIESEL GENERATOR BUILDING CONCRETE FLOOR EL. 760.5
FIGURE 3.8.4-78	YARD ADDITIONAL DIESEL GENERATOR BUILDING CONCRETE INTERIOR WALLS-FL EL. 760.5
FIGURE 3.8.4-79	YARD - ADDITIONAL DIESEL GENERATOR BUILDING CONCRETE ROOF EL. 774.0 OUTLINE
FIGURE 3.8.4-80	YARD ADDITIONAL DIESEL GENERATOR BUILDING CONCRETE MISSILE BARRIERS OUTLINE & REINFORCEMENT151
FIGURE 3.8.6-1	REACTOR BUILDING UNITS 1 & 2 175 TON POLAR CRANES ARRANGEMENT
FIGURE 3.8.6-2	REACTOR BUILDING UNITS 1 & 2 175 TON POLAR CRANES TROLLEY ARRANGEMENT AND DETAILS (SHEET 1)
FIGURE 3.8.6-3	REACTOR BUILDING UNITS 1 & 2 175 TON POLAR CRANES TROLLEY ARRANGEMENT AND DETAILS (SHEET 2)
FIGURE 3.8.6-4	175 TON POLAR CRANES BRIDGE DETAILS
FIGURE 3.8.6-5	REACTOR BUILDING UNITS 1 & 2 175 TON POLAR CRANES MISCELLANEOUS DETAILS (SHEET 1)
FIGURE 3.8.6-6	REACTOR BUILDING UNITS 1 & 2 175 TON POLAR CRANES MISCELLANEOUS DETAILS (SHEET 2)
FIGURE 3.8.6-7	AUXILIARY BUILDING UNITS 1 & 2 125 TON CRANE ARRANGEMENT
FIGURE 3.8.6-8	AUXILIARY BUILDING UNITS 1 & 2 125 TON CRANE TROLLEY ARRANGEMENT
FIGURE 3.8.6-9	AUXILIARY BUILDING UNITS 1 & 2 125 TON CRANE TROLLEY

LIST OF FIGURES

Section	Title
	DETAILS
FIGURE 3.8.6-10	AUXILIARY BUILDING UNITS 1 & 2 125 TON CRANE BRIDGE DETAILS
FIGURE 3.8.6-11	125 TON CRANE LIMIT SWITCH AND MECHANICAL STOP ARRANGEMENT
FIGURE 3.8A-1	SHELL WALL TEMPERATURE VERSUS TIME AFTER LOSS OF COOLANT
FIGURE 3.8A-2	TYPICAL TEMPERATURE TRANSIENT LOWER COMPARTMENT WALL
FIGURE 3.8B-1	BUCKLING STRESS COEFFICIENT, C_C , FOR UNSTIFFENED UNPRESSURIZED CIRCULAR CYLINDERS SUBJECTED TO AXIAL COMPRESSION
FIGURE 3.8B-2	INCREASE IN AXIAL-COMPRESSIVE BUCKLING-STRESS COEFFICIENT OF CYLINDERS DUE TO INTERNAL PRESSURE
FIGURE 3.8B-3	BUCKLING COEFFICIENTS FOR CIRCULAR CYLINDERS SUBJECTED TO EXTERNAL PRESSURE
FIGURE 3.8B-4	BUCKLING STRESS COEFFICIENT, C_S, FOR UNSTIFFENED UNPRESSURIZED CIRCULAR CYLINDERS SUBJECTED TO TORSION
FIGURE 3.8B-5	INCREASE IN TORSIONAL BUCKLING-STRESS COEFFICIENT OF CYLINDERS DUE TO INTERNAL PRESSURE
FIGURE 3.8B-6	BUCKLING-STRESS COEFFICIENT, C_B, FOR UNSTIFFENED UNPRESSURIZED CIRCULAR CYLINDERS SUBJECTED TO BENDING
FIGURE 3.8B-7	INCREASE IN BENDING BUCKLING-STRESS COEFFICIENT OF CYLINDERS DUE TO INTERNAL PRESSURE
FIGURE 3.8B-8	BUCKLING-STRESS COEFFICIENT, K_C, FOR UNPRESSURIZED CURVED PANELS SUBJECTED TO AXIAL COMPRESSION
FIGURE 3.8B-9	BUCKLING-STRESS COEFFICIENT, K_S, FOR UNPRESSURIZED CURVED PANELS SUBJECTED TO SHEAR
FIGURE 3.8B-10	BUCKLING-STRESS COEFFICIENT, K'_S, FOR UNPRESSURIZED CURVED PANELS SUBJECTED TO SHEAR
FIGURE 3.8C-1	VERTICAL STIFFENER MODEL
FIGURE 3.8C-2	POINTS OF STRESS CALCULATION
FIGURE 3.8C-3	JUMBO INSERT PLANT POINTS OF STRESS INTENSITIES
FIGURE 3.8C-4	DETERMINATION OF LOADS ON CENTER PENETRATION ASSOCIATED WITH MAXIMUM

LIST OF FIGURES

Section	Title
	STRESS INTENSITY
FIGURE 3.8C-5	PENETRATION ANALYSIS
FIGURE 3.8D-1	RESPONSE FOR EARTHQUAKE AVERAGING
FIGURE 3.8D-2	SPECTRAL RESPONSE
FIGURE 3.9-1	VIBRATION CHECK-OUT FUNCTIONAL TEST INSPECTION DATA
FIGURE 3.10-1	ORIENTATION OF CABLE TRAY AXES

LIST OF FIGURES

Section **Title**

THIS PAGE INTENTIONALLY BLANK

3.0 DESIGN OF STRUCTURES, COMPONENTS, EQUIPMENT, AND SYSTEMS

3.1 CONFORMANCE WITH NRC GENERAL DESIGN CRITERIA

3.1.1 Introduction

The Watts Bar Nuclear Power plant was designed to meet the intent of the "Proposed General Design Criteria for Nuclear Power Plant Construction Permits" published in July, 1967. The Watts Bar construction permit was issued in January, 1973. This FSAR, however, addresses the NRC General Design Criteria (GDC) published as Appendix A to 10 CFR 50 in July, 1971, including Criterion 4 as amended October 27, 1987.

Each criterion is followed by a discussion of the design features and procedures which meet the intent of the criteria. Any exception to the 1971 GDC resulting from the earlier commitments is identified in the discussion of the corresponding criterion. References to other sections of the FSAR are given for system design details.

3.1.2 WBNP Conformance with GDCs

3.1.2.1 Overall Requirements

Criterion 1 - Quality Standards and Records

Structures, systems, and components important to safety shall be designed, fabricated, erected, and tested to quality standards commensurate with the importance of the safety functions to be performed. Where generally recognized codes and standards are used, they shall be identified and evaluated to determine their applicability, adequacy, and sufficiency and shall be supplemented or modified as necessary to assure a quality product in keeping with the required safety function. A Quality Assurance Program shall be established and implemented in order to provide adequate assurance that these structures, systems, and components will satisfactorily perform their safety function. Appropriate records of the design, fabrication, erection and testing of structures, systems, and components important to safety shall be maintained by or under the control of the nuclear power unit licensee throughout the life of the unit.

Compliance

Discussions related to the applicable codes, design criteria and standards used in the design of particular systems are contained in the appropriate SAR sections and in Tables 3.2-1, 3.2-2, 3.2-3, 3.2-4 and 3.2-5.

The Quality Assurance Program conforms to the requirements of 10 CFR 50 Appendix B, "Quality Assurance Criteria for Nuclear Power Plants." Details of the program are given in Chapter 17.

Criterion 2 - Design Bases for Protection Against Natural Phenomena

Structures, systems, and components important to safety shall be designed to withstand the effects of natural phenomena such as earthquakes, tornadoes, hurricanes, floods, tsunami, and seiches without loss of capability to perform their safety functions. The design bases for these structures, systems, and components shall reflect:

(1) Appropriate consideration of the most severe of the natural phenomena that have been historically reported for the site and surrounding area, with sufficient margin for the limited accuracy, quantity, and period of time in which the historical data have been accumulated,

(2) Appropriate combinations of the effects of normal and accident conditions with the effects of the natural phenomena, and

(3) The importance of the safety functions to be performed.

Compliance

The structures, systems, and components important to safety are designed to either withstand the effects of natural phenomena without loss of capability to perform their safety functions, or to fail in the safest condition. Those structures, systems, and components vital to the shutdown capability of the reactor are designed to withstand the maximum probable natural phenomenon expected at the site, determined from recorded data for the site vicinity, with appropriate margin to account for uncertainties in historical data. Appropriate combinations of normal, accident, and natural phenomena structural loadings are considered in the plant design.

The nature and magnitudes of the natural phenomena considered in the design of the plant are discussed in Sections 2.3, 2.4, and 2.5. Sections 3.2 through 3.10 discuss the design of the plant in relationship to natural events. Seismic and safety classifications, as well as other pertinent standards and information, are given in the sections discussing individual structures and components.

Criterion 3 - Fire Protection

Structures, systems, and components important to safety shall be designed and located to minimize, consistent with other safety requirements, the probability and effect of fires and explosions. Noncombustible and heat-resistant materials shall be used wherever practical throughout the unit, particularly in locations such as the containment and control room. Fire detection and fighting systems of appropriate capacity and capability shall be provided and designed to minimize the adverse effects of fires on structures, systems, and components important to safety. Fire-fighting systems shall be designed to assure that their rupture or inadvertent operation does not significantly impair the safety capability of these structures, systems, and components.

Compliance

The plant is designed to minimize the probability of fires and explosions, and in the event of such occurrences to minimize the potential effects of such events to plant safety related equipment and personnel. Prime consideration was given to these requirements throughout the design process by providing for the duplication and physical separation of components in plant design and the use of materials classified as noncombustible and/or fire resistant wherever practical in safety-related areas of the plant. Equipment and facilities for fire protection, including detection, alarm, and extinguishment, are provided to protect both plant-equipment and personnel from fire, explosion, and the resultant release of toxic vapors. Fire-fighting systems are designed to assure that their rupture or inadvertent operation will not significantly impair systems important to safety. Portions of the fire-protection systems necessary to protect safety-related equipment in Class I structures are designed to seismic requirements.

The Fire Protection Systems provided are:

(1) High pressure water,

(2) Carbon dioxide, and

(3) Portable extinguishers.

The Fire Protection System is designed such that a failure of any component of the system or inadvertent operation:

(1) Does not cause a nuclear accident or significant release of radioactivity to the environment.

(2) Does not impair the ability of equipment to safely shutdown and isolate the reactor or limit the releases of radioactivity to the environment in the event of a postulated accident.

The Fire Protection Systems for the Watts Bar Nuclear Plant are discussed in Section 9.5.1. Protection from fire in the control room is discussed in Section 6.4.

Criterion 4 - Environmental and Missile Design Bases

Structures, systems, and components important to safety shall be designed to accommodate the effects of and to be compatible with the environmental conditions associated with normal operation, maintenance, testing, and postulated accidents, including loss-of-coolant accidents (LOCAs). These structures, systems, and components shall be appropriately protected against dynamic effects, including the effects of missiles, pipe whipping, and discharging fluids, that may result from equipment failures and from events and conditions outside the nuclear power unit.

Compliance

This criterion has been implemented as amended and published in the Federal Register, Volume 52, Number 207, October 27, 1987, 41288, which added the following:

> "However, dynamic effects associated with postulated pipe ruptures in nuclear power units may be excluded from the design basis when analyses reviewed and approved by the Commission demonstrate that the probability of fluid system piping rupture is extremely low under conditions consistent with the design basis for the piping."

Structures, systems, and components important to safety are designed to accommodate the effects of and to be compatible with the environmental conditions associated with normal operation, maintenance, testing, and postulated accidents. The associated environmental parameters are identified and incorporated in the design requirements and specifications. Particular care was given to the extreme environmental conditions associated with major incidents such as LOCAs. Required equipment and instrumentation are identified, environmental conditions such as temperature, pressure, humidity, and irradiation, are calculated, and the effects of the latter on the former were evaluated either analytically or experimentally. The dynamic effects associated with an accident were carefully identified and assurance given that the structures and systems (including engineered safeguards) assumed undamaged in the total assessment of the accident consequences are suitably protected.

Emergency core cooling components are austenitic stainless steel or equivalent corrosion resistant material and hence are compatible with the containment atmosphere over the full range of exposure during the post accident conditions.

Where vital components cannot be located away from potential missiles, protective walls and slabs, local missile shielding, and restraining devices are provided to protect the containment and engineered safety feature components within the containment against damage from missiles generated by the equipment failures associated with the design basis accident (DBA).

The environmental design of safety-related items is discussed in Section 3.8 on the design of structures; Sections 6.2.2 and 6.2.3 on containment heat removal and air purification; and Section 9.4 on ventilation systems. Safety- related systems and components used the input from these sections for design as discussed in Section 3.11. Missile and environmental protection is discussed in Sections 3.5 and 3.11, respectively.

Criterion 5 - Sharing of Structures, Systems, and Components

Structures, systems, and components important to safety shall not be shared among nuclear power units unless it is shown that such sharing will not impair significantly their ability to perform their safety functions, including, in the event of an accident in one unit, an orderly shutdown and cooldown of the remaining units.

Compliance

The structures important to safety that are shared are the Auxiliary Building (Section 3.8), Control Building (Section 3.8), Diesel Generator Building (Section 3.8), and the intake pumping station (Section 3.8). Shared safety- related systems include the essential raw cooling water (Section 9.2), component cooling water (Section 9.2), fire protection (Section 9.5), spent fuel cooling (Section 9.1), fuel oil storage tanks (Section 9.5), preferred and emergency electric power (Section 8.2 and 8.3, respectively), chemical and volume control (Section 9.3), radioactive waste (Chapter 11), emergency gas treatment system (Sections 6.2 and 6.5), and control and Auxiliary Building ventilation systems (Section 6.4). The vital dc power system is shared to the extent that a few loads (e.g., the vital inverters) in one nuclear unit are energized by the dc power channels assigned primarily to power loads of the other unit. In no case does the sharing inhibit the safe shutdown of one unit while the other unit is experiencing an accident. All shared systems are sized for all credible initial combinations of normal and accident states for the two units, with appropriate isolation to prevent an accident condition in one unit from carrying into the other. During the period of time when Unit 1 is licensed and Unit 2 is unlicensed, all portions of systems and structures important to the safe operation and safe shutdown of Unit 1 will be isolated and protected. For systems which are shared and have interface points, a means is provided for isolating and protecting the portions required for Unit 1 operation and safe shutdown from the balance of the Unit 2 systems which are not necessary or desirable for the operation and/or safe shutdown of Unit 1.

If the designated equipment configuration is revised to allow system testing or modification, appropriate action will be taken to ensure that the required system availability for accident mitigation is maintained.

3.1.2.2 Protection By Multiple Fission Product Barriers

Criterion 10 - Reactor Design

The reactor core and associated coolant, control, and protection systems shall be designed with appropriate margin to assure that specified acceptable fuel design limits are not exceeded during any condition of normal operation, including the effects of anticipated operational occurrences.

Compliance

The reactor core with its related coolant, control, and protection systems is designed to function throughout its design lifetime without exceeding acceptable fuel damage limits. The reactor trip system is designed to actuate a reactor trip for any anticipated combination of plant conditions when necessary to ensure that fuel design limits are not exceeded. The core design, together with reliable process and decay heat removal systems, provides for this capability under all expected conditions of normal operation with appropriate margins for uncertainties and anticipated transient situations, including the effects of loss of reactor coolant flow, trip of the turbine-generator, loss of normal feedwater and loss of both normal and preferred power sources.

Chapter 4 discusses the design bases and design evaluation of reactor components. Chapter 5 discusses the reactor coolant system. The details of the reactor trip and engineered safety features actuation system design and logic are discussed in Chapter 7. This information supports the accident analyses presented in Chapter 15.

Criterion 11 - Reactor Inherent Protection

The reactor core and associated coolant systems shall be designed so that in the power operating range the net effect of the prompt inherent nuclear feedback characteristics tends to compensate for a rapid increase in reactivity.

Compliance

A negative reactivity coefficient is a basic feature of core nuclear design as discussed in Chapter 4.

Criterion 12 - Suppression of Reactor Power Oscillations

The reactor core and associated coolant, control and protection systems shall be designed to assure that power oscillations which can result in conditions exceeding specified acceptable fuel design limits are not possible or can be reliably and readily detected and suppressed.

Compliance

Power oscillations of the fundamental mode are inherently eliminated by the negative Doppler and nonpositive moderator temperature coefficients of reactivity.

Oscillations due to xenon spatial effects in the radial, diametral and azimuthal overtone modes are heavily damped due to the inherent design and due to the negative Doppler and nonpositive moderator temperature coefficients of reactivity.

Oscillations due to xenon spatial effects in the axial first overtone mode may occur. Assurance that fuel design limits are not exceeded by xenon axial oscillations is provided as a result of reactor trip functions using the measured axial power imbalance as an input.

Oscillations due to xenon spatial effects in axial modes higher than the first overtone are heavily damped due to the inherent design and due to the negative Doppler coefficient of reactivity.

The stability of the core against xenon-induced power oscillations and the functional requirements of instrumentation for monitoring and measuring core power distribution are discussed in Section 4.3. Details of the instrumentation design and logic are discussed in Chapter 7.

Criterion 13 - Instrumentation and Control

Instrumentation shall be provided to monitor variables and systems over their anticipated ranges for normal operation, for anticipated operational occurrences, and for accident conditions as appropriate to assure adequate safety, including those

variables and systems that can affect the fission process, the integrity of the reactor core, the reactor coolant pressure boundary, and the containment and its associated systems. Appropriate controls shall be provided to maintain these variables and systems within prescribed operating ranges.

Compliance

Instrumentation and controls are provided to monitor and control neutron flux, control rod position, temperatures, pressures, flows, and levels as necessary to assure that adequate plant safety can be maintained. Instrumentation is provided in the reactor coolant system, steam and power conversion system, the containment, engineered safety features systems, radiological waste systems and other auxiliaries. Parameters that must be provided for operator use under normal operating and accident conditions are indicated in the control room in proximity with the controls for maintaining the indicated parameter in the proper range.

The quantity and types of process instrumentation provided measures safe and orderly operation of all systems over the full design range of the plant. These systems are described in Chapters 6, 7, 8, 9, 11 and 12.

Criterion 14 - Reactor Coolant Pressure Boundary

The reactor coolant pressure boundary shall be designed, fabricated, erected, and tested so as to have an extremely low probability of abnormal leakage, or rapidly propagating failure, and of gross rupture.

Compliance

The reactor coolant pressure boundary is designed to accommodate the system pressures and temperatures attained under all expected modes of plant operation, including all anticipated transients, and to maintain the stresses within applicable stress limits. In addition to the loads imposed on the piping under operating conditions, consideration is also given to abnormal loadings, such as pipe rupture and seismic loadings as discussed in Sections 3.6 and 3.7, respectively. The piping is protected from overpressure by means of pressure relieving devices as required by applicable codes.

Reactor coolant pressure boundary materials selection and fabrication techniques ensure a low probability of gross rupture or significant leakage.

The materials of construction of the reactor coolant pressure boundary are protected by control of coolant chemistry from corrosion which might otherwise reduce the structural integrity of the boundary during its service lifetime.

The reactor coolant pressure boundary has provisions for inspections, testing and surveillance of critical areas to assess the structural and leak tight integrity. The details are given in Section 5.2. For the reactor vessel, a material surveillance program conforming to applicable codes is provided.

Means are provided to detect significant uncontrolled leakage from the reactor coolant pressure boundary with indication in the control room as discussed in Section 5.2.

Criterion 15 - Reactor Coolant System Design

The reactor coolant system and associated auxiliary, control, and protection systems shall be designed with sufficient margin to assure that the design conditions of the reactor coolant pressure boundary are not exceeded during any condition of normal operation, including anticipated operational occurrences.

Compliance

Transient analyses presented in Section 5.2 lead to the conclusion that design conditions are not exceeded during normal operation. Protection and control set points are based on these transient analyses.

Additionally, reactor coolant pressure boundary components achieve a large margin of safety by the use of proven ASME materials and design codes, use of proven fabrication techniques, nondestructive shop testing and integrated hydrostatic testing of assembled components.

The effect of radiation embrittlement is considered in reactor vessel design, and surveillance samples monitor adherence to expected conditions throughout plant life.

Multiple safety and relief valves are provided for the reactor coolant system. These valves and their set points meet ASME criteria for over-pressure protection. The ASME criteria are satisfactory based on a long history of industry use. Chapter 5 discusses reactor coolant system design.

Criterion 16 - Containment Design

Reactor containment and associated systems shall be provided to establish an essentially leaktight barrier against the uncontrolled release of radioactivity to the environment and to assure that the containment design conditions important to safety are not exceeded for as long as postulated accident conditions require.

Compliance

The reactor containment (Section 6.2) is a freestanding, continuous steel membrane structure housing the reactor and various auxiliary components including the ice condenser. The ice condenser (Section 6.7) limits the initial containment pressure to a value less than design during a large LOCA. A concrete Shield Building surrounding the steel vessel allows for collection of any containment leakage, which is subsequently processed by the emergency gas treatment system (Section 6.5) before release to the environment. The containment also contains a spray system (Section 6.2) which supplements the ice condenser in limiting pressure and which also provides long-term cooling following a LOCA. The design pressure is not exceeded in any pressure transients which result from combining the effects of heat sources with minimal operation of the engineered safety features.

The containment system is designed to provide for protection of the public from the consequences of a LOCA based on a postulated break of the reactor coolant piping up to and including a doubled-ended break of the largest reactor coolant pipe. Periodic containment leak rate measurements ensure that the leaktight barrier is maintained.

Criterion 17 - Electric Power Systems

An onsite electric power system and an offsite electric power system shall be provided to permit functioning of structures, systems, and components important to safety. The safety function for each system (assuming the other system is not functioning) shall be to provide sufficient capacity and capability to assure that (1) specified acceptable fuel design limits and design conditions of the reactor coolant pressure boundary are not exceeded as a result of anticipated operational occurrences and (2) the core is cooled and containment integrity and other vital functions are maintained in the event of postulated accidents.

The onsite power sources, including the batteries, and the onsite electric distribution system, shall have sufficient independence, redundancy, and testability to perform their safety functions assuming a single failure.

Electric power from the transmission network to the onsite electric distribution system shall be supplied by two physically independent circuits (not necessarily on separate rights of way) designed and located so as to minimize to the extent practical the likelihood of their simultaneous failure under operating and postulated accident and environmental conditions. A switchyard common to both circuits is acceptable. Each of these circuits shall be designed to be available in sufficient time following a loss of all onsite alternating current power supplies and the other offsite electric power circuit, to assure that specified acceptable fuel design limits and design conditions of the reactor coolant pressure boundary are not exceeded. One of these circuits shall be designed to be available within a few seconds following a LOCA to assure that core cooling, containment integrity, and other vital safety functions are maintained.

Provisions shall be included to minimize the probability of losing electric power from any of the remaining sources as a result of, or coincident with, the loss of power generated by the nuclear power unit, the loss of power from the transmission network, or the loss of power from the onsite electric power sources.

Compliance

The capacity and capability of either the onsite or offsite electric power system is sufficient to assure that (1) specified fuel design limits and design conditions of the reactor coolant pressure boundary are not exceeded as a result of anticipated operational occurrences and (2) the core is cooled and containment integrity and other vital functions are maintained in the event of postulated accidents.

Offsite Electrical Power System

The offsite electrical power source consists of two physically independent circuits which are energized and available. The offsite sources are two independent 161-kV transmission lines terminating at the 161-kV switchyard, providing power to the plant,

on demand, via the common station service transformers to the onsite Class 1E distribution system.

Onsite Electrical Power System

The onsite electrical power system serves both nuclear power units and certain common plant equipment. It consists of two independent diesel generator systems, each system containing two diesel generator units, two redundant Class 1E electric power distribution trains, and four redundant vital instrument and control power channels, each provided with an uninterruptible ac power supply and distribution panel. A plant Class 1E dc power system is provided with four redundant divisions, each consisting of a battery, battery charger, and distribution panel. Each redundant onsite power supply, train, and channel has the capability and capacity to supply the required safety loads assuming the failure of its redundant counterpart.

For a detailed description and analysis of the offsite electrical power system and onsite electrical power system, see Sections 8.2 and 8.3, respectively.

Criterion 18 - Inspection and Testing of Electric Power Systems

Electric power systems important to safety shall be designed to permit appropriate periodic inspection and testing of important areas and features, such as wiring, insulation, connections, and switchboards, to assess the continuity of the systems and the condition of their components. The systems shall be designed with a capability to test periodically (1) the operability and functional performance of the components of the systems, such as onsite power sources, relays, switches, and buses, and (2) the operability of the systems as a whole and, under conditions as close to design as practical, the full operation sequence that brings the systems into operation, including operation of applicable portions of the protection system, and the transfer of power among the nuclear power unit, the offsite power system, and the onsite power system.

Compliance

Inspection

In addition to continuous surveillance by visual and audible alarms for any abnormal condition, the onsite power system is designed to permit inspection and checking of wiring, insulation, connections, and switchboards to the extent that personnel safety is not jeopardized, equipment not damaged, and the plant not exposed to accidental tripping.

On-Line Testing

The onsite power system is designed with provision for periodic testing during normal operation with the unit on line, to the extent that the plant is not exposed to accidental tripping and the reliability of the safety system not degraded. These features include provisions for starting and loading of onsite emergency diesel generators, and starting and loading of individual or groups of engineered safeguards to their respective buses. The system is also designed to permit testing of larger integrated segments of the system during planned cooldown of the reactor coolant system.

Off-Line Testing

The onsite power system is designed with facilities for a complete test of the operability of the system as a whole from initiation of protection system, starting and loading of the diesel generators, transfer of power sources and the full operational sequence of engineered safety features.

Inspection and testing of electrical power systems is further described in Sections 8.3.1.1 and 8.3.2.1.

Criterion 19 - Control Room

A control room shall be provided from which actions can be taken to operate the nuclear power unit safely under normal conditions and to maintain it in a safe condition under accident conditions including LOCAs. Adequate radiation protection shall be provided to permit access and occupancy of the control room under accident conditions without personnel receiving radiation exposures in excess of 5 rem whole body, or its equivalent to any part of the body, for the duration of the accident.

Equipment at appropriate locations outside the control room shall be provided (1) with a design capability for prompt hot shutdown of the reactor, including necessary instrumentation and controls to maintain the unit in a safe condition during hot shutdown, and (2) with a potential capability for subsequent cold shutdown of the reactor through the use of suitable procedures.

Compliance

The plant is provided with a separate structure designated as the Control Building. Within the Control Building are located control rooms, auxiliary instrument room, computer room, battery and dc equipment rooms (including space for instrument motor generator, etc), switchyard relay room, plant communications room and service facilities such as shift engineer office, kitchen, instrument shop, toilet facilities, and mechanical equipment room for heating, ventilating, and air conditioning equipment.

The main control room was provided with unit control panels for each of the two units, the switchyard, electrical recording, dc distribution, operation of the diesel generator system, and for those systems shared by the two units. The unit control panels contain those instruments and controls necessary for operation of the unit, functions such as the reactor and its auxiliary system, turbine generator, and the steam and power conversion systems. Selection of loading from the various plant electrical distribution boards such as the startup boards, common service board, shutdown boards, and motor control centers is accomplished from the unit control panels.

The control room is designed and equipped to minimize the effects of possible events such as fire, high radiation levels, and excessive temperature which might preclude occupancy. The main control room is continuously occupied by qualified operating personnel under all operating and accident conditions except in the case of events such as fire or smoke which could necessitate its evacuation. In the unlikely event that control room occupancy becomes impossible, provisions have been made to bring the reactor units to, and maintain them in, a hot shutdown condition, from a location

external to the main control room. By use of appropriate procedures and available equipment, the unit can also be brought to cold shutdown conditions.

Sufficient shielding, distance, and containment integrity are provided to assure that under postulated accident conditions control room personnel shall not be subjected to radiation doses which would exceed 5 rem to the whole body, or its equivalent to any part of the body, including doses received during both ingress and egress. Control room ventilation is provided by a system having a large percentage of recirculated air. After an accident, makeup air is automatically routed through a system of HEPA and charcoal filters.

The design of the control room for occupancy during accidents is discussed in Section 6.4. The heating, ventilation, and air conditioning of the Control Building is discussed in Section 9.4. Radiation doses to control personnel following a LOCA are evaluated in Section 15.5.3. Radiation protection design features are discussed in Section 12.3.

3.1.2.3 Protection and Reactivity Control Systems

Criterion 20 - Protection System Functions

The protection system shall be designed (1) to initiate automatically the operation of appropriate systems including the reactivity control systems, to assure that specified acceptable fuel design limits are not exceeded as a result of anticipated operational occurrences and (2) to sense accident conditions and to initiate the operation of systems and components important to safety.

Compliance

A fully automatic protection system (with appropriate redundant channels) is provided to cope with transients where insufficient time is available for manual corrective action. The design basis for all protection systems is in accord with IEEE Standard 279-1971. The reactor trip system automatically initiates a reactor trip when any appropriate monitored variable or combination of variables exceed the normal operating range. Setpoints are chosen to provide an envelope of safe operating conditions with adequate margin for uncertainties to ensure that fuel design limits are not exceeded.

Reactor trip is initiated by removing power to the rod drive mechanisms of all the full length rod cluster control assemblies. This will allow the assemblies to free fall into the core, rapidly reducing reactor power output.

The engineered safety features actuation system automatically initiates emergency core cooling, and other safeguards functions, by sensing accident conditions using redundant process protection system channels measuring diverse parameters. Manual actuation of safeguards is relied upon where ample time is available for operator action. The ESF actuation system also provides a reactor trip on manual or automatic safety injection (S) signal generation.

The response and adequacy of the protection systems is analyzed for all conditions specified by the ANS N18.2 standard through Condition IV.

For further discussion of the reactor trip system and engineered safety features actuation system, see Sections 7.2 and 7.3, respectively.

Criterion 21 - Protection System Reliability and Testability

The protection system shall be designed for high functional reliability and inservice testability commensurate with the safety functions to be performed. Redundancy and independence designed into the protection system shall be sufficient to assure that (1) no single failure results in loss of protection function and (2) removal from service of any component or channel does not result in a loss of the required minimum redundancy unless the acceptable reliability of operation of the protection can be otherwise demonstrated. The protection system shall be designed to permit periodic testing of its functioning when the reactor is in operation, including a capability to test channels independently to determine failures and losses of redundancy that may have occurred.

Compliance

The protection system is designed for high functional reliability and inservice testability. The design employs redundant logic trains, and measurement and equipment diversity.

The protection system is designed in accordance with IEEE Standard 279-1971. All safety actuation circuitry is provided with a capability for testing with the reactor at power. The protection systems, including the process protection system, nuclear instrumentation system and the engineered safety features test cabinet comply with Regulatory Guide 1.22 on periodic testing of protection system actuation functions. Under the present design, there are protective functions which are not tested at power. The functions can be tested under shutdown plant conditions, so that they do not interrupt power operation, as allowed by Regulatory Guide 1.22. For those process protection functions that may be tested in bypass, alarms are provided in the control room and at the process rack to indicate the bypassed condition. Additional information on the capability of the process protection system to be tested in the bypassed mode is provided in Section 7.2.2.2, Subsections 10, 11, 12, 13 and 14.

In those cases where equipment cannot be tested at power, it is only the actuation device function which is not tested. The logic associated with the actuation devices has the capability for testing at power. Such testing will disclose failures or reduction in redundancy which may have occurred. Removal from service of any single channel or component does not result in loss of minimum required redundancy. For example, a two-of-three function becomes a one-of-two function when one channel is removed. (Note that this is not true for the logic trains which are effectively a one-out-of-two logic.)

Semiautomatic testers are built into each of the two logic trains in a protection system. These testers have the capability of testing the major part of the protection system very rapidly while the reactor is at power. Between tests, a number of internal protection system points including the associated power supplies and fuses are continuously monitored. Outputs of the monitors are logically processed to provide alarms for

failures in one train and automatic reactor trip for failures in both trains. Self-testing provision is designed into each tester. Additional details can be found in Sections 7.2 and 7.3.

Criterion 22 - Protection System Independence

The protection system shall be designed to assure that the effects of natural phenomena, and of normal operating, maintenance, testing, and postulated accident conditions on redundant channels do not result in loss of the protection function, or shall be demonstrated to be acceptable on some other defined basis. Design techniques, such as functional diversity or diversity in component design and principles of operation, shall be used to the extent practical to prevent loss of the protection function.

Compliance

Design of protection systems includes consideration of natural phenomena, normal maintenance, testing and accident conditions such that the protection functions are always available.

Sufficient redundancy and independence is designed into the protection system to assure that no single failure, or removal from service of any component or channel of a system, will result in loss of the protection function. The minimum redundancy is exceeded in each protection function which is active with the reactor at power. Functional diversity and consequential location diversity are designed into the system. For example, loss of one feedwater pump would actuate one pressure reactor trip, one high-level trip, one low-level trip, and two temperature trips. The protective system is discussed in detail in Sections 7.2 and 7.3.

Criterion 23 - Protection System Failure Modes

The protection system shall be designed to fail into a safe state or into a state demonstrated to be acceptable on some other defined basis if conditions such as disconnection of the system, loss of energy (e.g., electric power, instrument air), or postulated adverse environments (e.g., extreme heat or cold, fire, pressure, steam, water, and radiation) are experienced.

Compliance

The protection system is designed with due consideration of the most probable failure modes of the components under various perturbations of the environment and energy sources. Each reactor trip and engineered safety features actuation channel (except for containment spray and switchover from injection to recirculation) is designed on the deenergize-to-trip principle so loss of power, disconnection, open-channel faults, and the majority of internal channel short-circuit faults cause the channel to go into its tripped mode. The protection system is discussed in Sections 7.2 and 7.3.

Criterion 24 - Separation of Protection and Control Systems

The protection system shall be separated from control systems to the extent that failure of any single control system component or channel, or failure or removal from service

of any single protection system component or channel which is common to the control and protection systems leaves intact a system satisfying all reliability, redundancy, and independence requirements of the protection system. Interconnection of the protection and control systems shall be limited so as to assure that safety is not significantly impaired.

Compliance

The protection system is separate and distinct from control systems. Control systems may be dependent on the protection system in that control signals are derived from protection system measurements where applicable. These signals are transferred to the control system by isolation devices which are classified as protection components. The adequacy of system isolation has been verified by testing under conditions of postulated credible faults. The failure or removal of any single control system component or channel, or failure or removal from service of any single protection system component or channel which is common to the control and protection system leaves intact a system which satisfies the requirements of the protection system. Distinction between channel and train is made in this discussion. The removal of a train from service is allowed only during testing of the train. For discussion of details of compliance, see Chapter 7.

Criterion 25 - Protection System Requirements for Reactivity Control Malfunctions

The protection system shall be designed to assure that specified acceptable fuel design limits are not exceeded for any single malfunction of the reactivity control systems, such as accidental withdrawal (not ejection or dropout) of control rods.

Compliance

The protection system is designed to limit reactivity transients so that fuel design limits are not exceeded. Reactor shutdown by full-length rod insertion is completely independent of the normal control function since the trip breakers interrupt power to the rod mechanisms regardless of existing control signals. Thus, in the postulated accidental withdrawal, (assumed to be initiated by a control malfunction) flux, temperature, pressure, level and flow signals would be generated independently. Any of these signals (trip demands) would operate the breakers to trip the reactor.

Analyses of the effects of possible malfunctions are discussed in Chapter 15. These analyses show that for postulated dilution during refueling, startup, or manual or automatic operation at power, the operator has ample time to determine the cause of dilution, terminate the source of dilution and initiate reboration before the shutdown margin is lost. The analyses show that acceptable fuel damage limits are not exceeded even in the event of a single malfunction of either system.

Criterion 26 - Reactivity Control System Redundancy and Capability

Two independent reactivity control systems of different design principles shall be provided. One of the systems shall use control rods, preferably including a positive means for inserting the rods, and shall be capable of reliably controlling reactivity

changes to assure that under conditions of normal operation, including anticipated operational occurrences, and with appropriate margin for malfunctions such as stuck rods, specified acceptable fuel design limits are not exceeded. The second reactivity control system shall be capable of reliably controlling the rate of reactivity changes resulting from planned, normal power changes (including xenon burnout) to assure acceptable fuel design limits are not exceeded. One of the systems shall be capable of holding the reactor core subcritical under cold conditions.

Compliance

Two reactivity control systems are provided. These are rod cluster control assemblies (RCCAs) and chemical shim (boric acid). The RCCAs are inserted into the core by the force of gravity.

During operation the shutdown rod banks are fully withdrawn. The full length control rod system automatically maintains a programmed average reactor temperature compensating for reactivity effects associated with scheduled and transient load changes. The shutdown rod banks along with the full length control banks are designed to shutdown the reactor with adequate margin under conditions of normal operation and anticipated operational occurrences thereby ensuring that specified fuel design limits are not exceeded. The most restrictive period in core life is assumed in all analyses and the most reactive rod cluster is assumed to be in the fully withdrawn position.

The boron system will maintain the reactor in the cold shutdown state independent of the position of the control rods and can compensate for xenon burnout transients.

Details of the construction of the RCCAs are presented in Chapter 4 and the operation is discussed in Chapter 7. The means of controlling the boric acid concentration is described in Chapter 9. Performance analyses under accident conditions are included in Chapter 15.

Criterion 27 - Combined Reactivity Control Systems Capability

The reactivity control systems shall be designed to have a combined capability, in conjunction with poison addition by the emergency core cooling system, of reliably controlling reactivity changes to assure that under postulated accident conditions and with appropriate margin for stuck rods the capability to cool the core is maintained.

Compliance

Sufficient shutdown capability is provided to maintain the core subcritical for any anticipated cooldown transient, e.g., accidental opening of a steam bypass or relief valve, or safety valve stuck open. This shutdown capability is achieved by a combination of RCCA insertion and automatic boron addition via the emergency core cooling system with the most reactive control rod assumed to be fully withdrawn. Manually controlled boric acid addition is used to supplement the RCCA in maintaining the shutdown margin for the long-term conditions of xenon decay and plant cooldown. For further discussion, see Sections 4.3 and 7.2.

Criterion 28 - Reactivity Limits

The reactivity control systems shall be designed with appropriate limits on the potential amount and rate of reactivity increase to assure that the effects of postulated reactivity accidents can neither (1) result in damage to the reactor coolant pressure boundary greater than limited local yielding nor (2) sufficiently disturb the core, its support structures or other reactor pressure vessel internals to impair significantly the capability to cool the core. These postulated reactivity accidents shall include consideration of rod ejection (unless prevented by positive means), rod dropout, steam line rupture, changes in reactor coolant temperature and pressure, and cold water addition.

Compliance

The maximum reactivity worth of control rods and the maximum rate of reactivity insertion employing control rods and boron removal are limited to values that prevent rupture of the reactor coolant system boundary or disruptions of the core or vessel internals to a degree that could impair the effectiveness of emergency core cooling.

The appropriate reactivity insertion rate for the withdrawal of RCCA and the dilution of the boric acid in the reactor coolant systems are specified in the Technical Specifications for the facility. The specification includes appropriate graphs that show the permissible mutual withdrawal limits and overlap of functions of the several RCCA banks as a function of power. These data on reactivity insertion rates, dilution and withdrawal limits are also discussed in Section 4.3. The capability of the chemical and volume control system to avoid an inadvertent excessive rate of boron dilution is discussed in Chapter 9. The relationship of the reactivity insertion rates to plant safety is discussed in Chapter 15.

Criterion 29 - Protection Against Anticipated Operational Occurrences

The protection and reactivity control systems shall be designed to assure an extremely high probability of accomplishing their safety functions in the event of anticipated operational occurrences.

Compliance

The protection and reactivity control systems are designed to assure an extremely high probability of fulfilling their intended functions. The design principles of diversity and redundancy coupled with a rigorous Quality Assurance Program and analyses support accomplishing this probability as does operating experience in plants using the same basic design. Section 4.2.3 and Sections 7.2 and 7.7 describe design bases and system design.

3.1.2.4 Fluid Systems

Criterion 30 - Quality of Reactor Coolant Pressure Boundary

Components which are part of the reactor coolant pressure boundary shall be designed, fabricated, erected, and tested to the highest quality standards practical.

Means shall be provided for detecting and, to the extent practical, identifying the location of the source of reactor coolant leakage.

Compliance

All reactor coolant system components are designed, fabricated, inspected and tested in conformance with ASME Boiler and Pressure Vessel Code, Section III.

Leakage is detected by an increase in the amount of makeup water required to maintain a normal level in the pressurizer. The reactor vessel closure joint is provided with a temperature monitored leakoff between double 0-rings.

Leakage inside the reactor containment is drained to the Reactor Building sump where the level is monitored. Leakage is also detected by measuring the airborne activity and humidity of the containment.

See Section 5.2 for compliance of reactor coolant system components with ASME Boiler and Pressure Vessel Code, Section III.

Criterion 31 - Fracture Prevention of Reactor Coolant Pressure Boundary

The reactor coolant pressure boundary shall be designed with sufficient margin to assure that when stressed under operating, maintenance, testing, and postulated accident conditions (1) the boundary behaves in a nonbrittle manner and (2) the probability of rapidly propagating fracture is minimized. The design shall reflect consideration of service temperatures and other conditions of the boundary material under operating, maintenance, testing, and postulated accident conditions and the uncertainties in determining (1) material properties, (2) the effects of irradiation on material properties, (3) residual, steady-state and transient stresses, and (4) size of flaws.

Compliance

Close control is maintained over material selection and fabrication for the reactor coolant system to assure that the boundary behaves in a nonbrittle manner. The reactor coolant system materials which are exposed to the coolant are corrosion resistant stainless steel or Inconel. The reference temperature RT_{NDT} of the reactor vessel material samples is established by Charpy V-Notch Tensile and 1/2 T compact tension tests. These tests also insure that materials with proper toughness properties and margins are used.

As part of the reactor vessel specification certain requirements which are not specified by the applicable ASME codes are performed, as follows:

(1) A complete independent review of the supplier stress analysis is conducted by Westinghouse on the reactor vessel. Independent stress analysis is conducted in selected areas to ascertain that the design conditions imposed by the Westinghouse specification have been adequately accounted for.

(2) The reactor vessel received a complete stress analysis, including analysis for cyclic pressure and temperature operation. The ASME Boiler and Pressure Vessel Code, Section III, "Nuclear Power Plant Components," Class 1 rules to which these components are designed generally exempt them from cyclic analysis by code Paragraph NB-3222.4 (d).

(3) Welding Preheat Requirements - On the reactor vessel, the non-mandatory preheat requirements for P1 and P12 material were performed on all weldments.

(4) Reactor Vessel Out-of-Roundness Requirements - To ensure uniform coolant flow, the Westinghouse out-of-roundness requirements on the cylindrical region in the area of the thermal shield are above code. Section III, Class 1 out-of-roundness requirements are stated in Paragraph NB-4221.1 of the code. This referenced paragraph states that the difference in inches between the maximum and minimum inside diameters at any cross section shall not exceed the smaller of (D + 50)/200 and D/100, where D is the nominal inside diameter in inches at the cross section under consideration. Westinghouse required the out-of-roundness to be less than 0.5 percent of the diameter in the cylindrical section of the vessel in the region of the thermal shield.

Special requirements were imposed by Westinghouse on the quality control procedure for both the basic materials of construction, and on various sub-assemblies and final assembly for the reactor coolant loop components. These requirements supplemented the rules for quality assurance stated in the applicable design codes. Examples of the special quality assurance requirements for the reactor vessel that are beyond code requirements are:

Ultrasonic Examinations

(1) A 100-percent shear wave ultrasonic test of plate material.

(2) An ultrasonic test of cladding bond.

(3) Weld buildup areas to which the core support pads are attached are examined 100 percent.

(4) Selected areas of completed vessel are ultrasonically mapped after hydrotest to provide a base for future in-service inspection.

(5) Ultrasonic examination of the entire volume of all full penetration welds and heat affected zones in primary pressure boundary welds. The testing was done during fabrication upon completion of the welding and intermediate heat treatment.

Dye Penetrant Testing

(1) Dye penetrant test all cladding surfaces and other vessel and head internal surfaces after hydrotest.

(2) Dye penetrant examine the weld between the bottom head and instrumentation tubes, after each layer of weld is deposited.

(3) Dye penetrant examine weld between CRDM housing and closure head and vent pipe and closure head after the first layer, each 1/4 inch of weld deposited and final surface.

(4) Dye penetrant examine weld between the lower core support pad and the vessel shell, after the first layer and each 1/2 inch of weld metal are deposited.

(5) Base metal or weld metal surfaces which are exposed to mechanical operations was dye penetrant or magnetic particle inspected.

Magnetic Particle Testing

(1) Magnetic particle examination of all exterior vessel and head surfaces after hydrotest.

(2) Magnetic particle examination of welds attaching the vessel supports, closure head lifting lugs, and refueling seal ledge to the reactor vessel, after the first layer and each 1/2 inch of weld metal are deposited.

(3) Magnetic particle examination of all closure stud surfaces after threading. Continuous circular and longitudinal magnetization was used.

(4) Magnetic particle examination of I.D. surfaces of carbon and low alloy steel products that have their properties enhanced by accelerated cooling. This inspection was performed after forming and prior to cladding.

The fabrication and quality control techniques used in the fabrication of the reactor coolant system were equivalent to those for the reactor vessel. The inspections of reactor vessel, pressurizer, piping and steam generator were governed by ASME code requirements.

The permissible pressure - temperature relationships for selected heatup and cooldown rates were calculated using the methods of ASME Code Section III Non-mandatory Appendix G. The change in RT_{NDT} due to irradiation during plant life was calculated using conservative methods and will be verified periodically by surveillance program irradiated material test data.

See Section 5.2 for further discussion of compliance.

Criterion 32 - Inspection of Reactor Coolant Pressure Boundary

Components which are part of the reactor coolant pressure boundary shall be designed to permit (1) periodic inspection and testing of important areas and features to assess their structural and leak-tight integrity, and (2) an appropriate material surveillance program for the reactor pressure vessel.

Compliance

The design of the reactor coolant pressure boundary provides the capability for accessibility during service life to the entire internal surfaces of the reactor vessel, certain external zones of the vessel including the nozzle to reactor coolant piping welds and the top and bottom heads, and external surfaces of the reactor coolant piping except for the area of pipe within the primary shielding concrete. The inspection capability complements the leakage detection systems in assessing the pressure boundary component's integrity. The reactor coolant pressure boundary will be periodically inspected under the provision of ASME Code, Section XI.

The RT_{NDT} properties of the reactor vessel core region forging, weldments and associated heat treated zones will be monitored by a surveillance program which is based on ASTM-E-185, Recommended Practice for Surveillance Testing on Structural Materials in Nuclear Reactors. Samples of reactor vessel plate materials will be retained and catalogued in case future engineering development shows the need for further testing.

The material properties surveillance program includes not only the conventional tensile and impact tests, but also fracture mechanics specimens. The observed shifts in RT_{NDT} of the core region materials with irradiation will be used to confirm the calculated limits to startup and shutdown transients.

To define permissible operating conditions below RT_{NDT}, a pressure range was established which is bounded by a lower limit for pump operation and an upper limit which satisfies reactor vessel stress criteria. To allow for thermal stresses during heatup or cooldown of the reactor vessel, an equivalent pressure limit was defined to compensate for thermal stress as a function of rate of change of coolant temperature. Since the normal operating temperature of the reactor vessel is well above the maximum expected RT_{NDT}, brittle fracture during normal operation is not considered to be a credible mode of failure. Additional details can be found in Section 5.2.

Criterion 33 - Reactor Coolant Makeup

A system to supply reactor coolant makeup for protection against small breaks in the reactor coolant pressure boundary shall be provided. The system safety function shall be to assure that specified acceptable fuel design limits are not exceeded as a result of reactor coolant loss due to leakage from the reactor coolant pressure boundary and rupture of small piping or other small components which are part of the boundary. The system shall be designed to assure that for onsite electric power system operation (assuming offsite power is not available) and for offsite electric power system operation (assuming onsite power is not available) the system safety function can be

accomplished using the piping, pumps, and valves used to maintain coolant inventory during normal reactor operation.

Compliance

The chemical and volume control system includes charging pumps and makeup paths that serve the safety function of maintaining reactor coolant inventory during normal operations and in the event of small reactor coolant leakages. The charging pumps can maintain reactor coolant pressure sufficiently high to allow orderly reactor shutdown for small tubing or small pipe breaks. Chapter 5 discusses the reactor coolant system, Section 9.3.4 discusses the chemical and volume control system, and Chapter 15 analyzes charging pump performance and fuel damage in event of postulated accidents. The offsite power system and onsite power system are discussed in Sections 8.2 and 8.3, respectively.

Criterion 34 - Residual Heat Removal (RHR)

A system to remove residual heat shall be provided. The system safety function shall be to transfer fission product decay heat and other residual heat from the reactor core at a rate such that specified acceptable fuel design limits and the design conditions of the reactor coolant pressure boundary are not exceeded.

Suitable redundancy in components and features, and suitable interconnections, leak detection, and isolation capabilities shall be provided to assure that for onsite electric power system operation (assuming offsite power is not available) and for offsite electric power system operation (assuming onsite power is not available) the system safety function can be accomplished, assuming a single failure.

Compliance

The RHR system includes two redundant trains of pumps and heat exchangers each having sufficient heat removal capability to ensure fuel protection. The system is Seismic Category I and is provided electric power by either the preferred power system or the diesel generators of the standby power system. The normal steam and power conversion system is used for the first stage cooldown (i.e., above 350°F and 400 psig). The auxiliary feedwater system provides guaranteed backup of the steam and power conversion system in this function. The systems together accommodate the single-failure criterion.

Section 5.5.7 describes the RHR System.

Criterion 35 - Emergency Core Cooling

A system to provide abundant emergency core cooling shall be provided. The system safety function shall be to transfer heat from the reactor core following any loss of reactor coolant at a rate such that (1) fuel and clad damage that could interfere with continued effective core cooling is prevented and (2) clad metal-water reaction is limited to negligible amounts.

Suitable redundancy in components and features, and suitable interconnections, leak detection, isolation, and containment capabilities shall be provided to assure that for onsite electric power system operation (assuming offsite power is not available) and for offsite electric power system operation (assuming onsite power is not available) the system safety function can be accomplished, assuming a single failure.

Compliance

The Emergency Core Cooling System (ECCS) design and safety analysis is in accordance with the NRC Acceptance Criterion for Emergency Core Cooling System for Light-Water Power Reactors of December 1973 (10 CFR 50.46).

By combining the use of passive accumulators, centrifugal charging pumps, safety injection pumps, and residual heat removal pumps, emergency core cooling is provided even if there should be a failure of any component in any system. The ECCS employs passive system of accumulators which do not require any external signals or source of power. Two independent and redundant pumping systems are also provided to supplement the passive accumulator system. These systems are arranged so that the single failure of any active component does not prevent meeting the short-term cooling requirements.

The primary function of the ECCS is to deliver borated cooling water to the reactor core in the event of a LOCA. This limits the fuel-clad temperature and thereby ensures that the core will remain intact and in place and fuel damage will not exceed that stipulated as a basis in the safety analysis (Chapter 15). This protection is afforded for:

(1) All pipe break sizes up to and including the hypothetical circumferential rupture of a reactor coolant loop,

(2) A loss of coolant associated with a rod ejection accident.

The ECCS is described in Section 6.3. The LOCA, including an evaluation of consequences, is discussed in Chapter 15.

Criterion 36 - Inspection of Emergency Core Cooling System

The emergency core cooling system shall be designed to permit appropriate periodic inspection of important components, such as spray rings in the reactor pressure vessel, water injection nozzles, and piping, to assure the integrity and capability of the system.

Compliance

Design provisions facilitate access to the critical parts of the reactor vessel internals, injection nozzles, pipes and valves for visual or nondestructive inspection.

The components outside the containment are accessible for leaktightness inspection during operation of the reactor.

Details of the inspection program for the reactor vessel internals are included in Section 5.4. Inspection of the ECCS is discussed in Section 6.3.

Criterion 37 - Testing of Emergency Core Cooling System

The emergency core cooling system shall be designed to permit appropriate periodic pressure and functional testing to assure (1) the structural and leaktight integrity of its components, (2) the operability and performance of the active components of the system, and (3) the operability of the system as a whole and under conditions as close to design as practical, the performance of the full operational sequence that brings the system into operation, including operation of applicable portions of the protection system, the transfer between normal and emergency power sources, and the operation of the associated cooling water system.

Compliance

The design provides for periodic testing of both active and passive components of the ECCS.

Proof tests of the components were performed in the manufacturer's shop. Preoperational system hydrostatic and performance tests demonstrate structural and leaktight integrity of components and proper functioning of the system. Thereafter, periodic tests demonstrate that components are functioning properly.

Design provisions include special instrumentation, testing, and sampling lines to perform the tests during plant shutdown to demonstrate proper automatic operation of the ECCS.

Each active component of the ECCS may be individually actuated on the normal power source at any time during plant operation to demonstrate operability. Components are actuated on the emergency power system during preoperational tests and subsequently during plant shutdown per Technical Specifications.

Details of the ECCS are found in Section 6.3, with periodic testing procedures identified in Section 6.3.4. Performance under accident conditions is evaluated in Chapter 15.

Criterion 38 - Containment Heat Removal

A system to remove heat from the reactor containment shall be provided. The system safety function shall be to reduce rapidly, consistent with the functioning of other associated systems, the containment pressure and temperature following any LOCA and maintain them at acceptably low levels.

Suitable redundancy in components and features, and suitable interconnections, leak detection, isolation, and containment capabilities shall be provided to assure that for onsite electric power system operation (assuming offsite power is not available) and for offsite electric power system operation (assuming onsite power is not available) the system safety function can be accomplished, assuming a single failure.

Compliance

Systems are provided to effect post-accident containment heat removal. The systems are classified as engineered safety features and as such incorporate a large degree of redundancy as well as being provided with multiple power supplies.

Containment heat removal is provided by the ice condenser and by containment sprays. The ice condenser is a passive system consisting of energy absorbing ice on which steam is condensed during and immediately after a LOCA. The condensation of steam on the ice limits the pressure and temperature to values less than containment design.

An air return system is used to circulate the containment gaseous inventory through the upper compartment, lower compartment, and ice condenser after the initial blowdown. This maintains proper mixing of the containment air and steam with the heat removal media, spray and ice, for the necessary heat removal.

The containment spray system sprays coolant automatically into the upper compartment containment atmosphere in the event of a large LOCA, thereby removing containment heat. The recirculation mode allows for a long-term heat removal by means of two spray systems, each of which contains redundant components including spray headers. The containment spray system consists of two completely separate trains consisting of pumps, heat exchangers, valves, and headers. The containment spray system is initiated automatically upon containment high pressure and is later manually realigned for proper operation in the recirculation mode. The residual heat removal spray contains two spray headers which are supplied from separate trains of the residual heat removal system by manual diversion of a portion of the low-pressure safety injection system flow during recirculation.

The loss of a single active component was assumed in the design of these systems. Emergency power system arrangements assure the proper functioning of the air return fan system, and the containment spray system and residual heat removal sprays.

The engineered safety features systems are discussed in Chapter 6; the electric power systems in Chapter 8; the protection systems in Chapter 7.

Criterion 39 - Inspection of Containment Heat Removal System

The containment heat removal system shall be designed to permit appropriate periodic inspection of important components, such as the torus, pumps, spray nozzles, and piping to assure the integrity and capability of the system.

Compliance

The ice condenser design includes provisions for visual inspections of the ice bed flow channels, doors, and cooling equipment. The air return fan system provides for visual inspection of the fans and the associated backflow dampers and for duct systems that are not embedded in concrete. The containment spray system and the RHR sprays are designed such that active and passive components can be readily inspected to demonstrate system readiness. Pressure contained systems are inspected for leaks

from pump seals, valve packing, flange joints, and relief valves. During operational testing of the containment spray pumps and RHR pumps, the portions of the systems subjected to pressure are inspected for leaks.

System design details are given in Section 6.2.

Criterion 40 - Testing of Containment Heat Removal System

The containment heat removal system shall be designed to permit appropriate periodic pressure and functional testing to assure (1) the structural and leaktight integrity of its components, (2) the operability and performance of the active components of the system, and (3) the operability of the system as a whole, and, under conditions as close to the design as practical, the performance of the full operational sequence that brings the system into operation, including operation of applicable portions of the protection system, the transfer between normal and emergency power sources, and the operation of the associated cooling water system.

Compliance

The containment heat removal systems described in Section 6.2 are designed to permit periodic testing so that proper operation can be assured. In some cases whole systems can be operated for test purposes. In others, individual components are operated for functional tests so that plant operations are not disrupted.

The ice condenser contains no active components, other than the ice condenser doors, which are required to function during an accident condition. Samples of the ice are taken periodically and tested for boron concentration. The lower inlet door opening force is measured when the reactor is in the shutdown condition. The position of the lower inlet doors is monitored at all times. Top deck door and intermediate deck doors are tested for operability during the shutdown condition. Air return fans and their associated backflow dampers are tested for operability while the reactor is shut down for refueling.

All active components of the containment spray system and the residual heat removal spray system are tested in place after installation. These spray systems receive initial flow tests to assure proper dynamic functioning. Further testing of the active components is conducted after component maintenance and in accordance with Technical Specifications. Air test lines, located upstream of the spray isolation valves, are provided for testing to assure that spray nozzles are not obstructed. Testing of transfer between normal and emergency power supplies is also conducted.

Criterion 41 - Containment Atmosphere Cleanup

Systems to control fission products, hydrogen, oxygen, and other substances which may be released into the reactor containment shall be provided as necessary to reduce, consistent with the functioning of other associated systems, the concentration and quality of fission products released to the environment following postulated accidents, and to control the concentration of hydrogen or oxygen and other substances in the containment atmosphere following postulated accidents to assure that containment integrity is maintained.

Each system shall have suitable redundancy in components and features, and suitable interconnections, leak detection, isolation, and containment capabilities to assure that for onsite electric power system operation (assuming offsite power is not available) and for offsite electric power system operation (assuming onsite power is not available) its safety function can be accomplished, assuming a single failure.

Compliance

The Shield Building, surrounding the primary containment, serves as a secondary containment. During accident conditions prior to containment isolation, primary and secondary containment purge exhaust is processed by the containment purge system filters prior to release to the atmosphere. The emergency gas treatment system (Section 6.2) maintains this secondary containment at a negative pressure during the entire post-accident period. The emergency gas treatment system also collects and processes the secondary containment atmosphere. After processing, the portion of this processed air necessary to assure a negative pressure is exhausted through the Shield Building exhaust vent. The remainder is recirculated and distributed in the secondary containment.

The Auxiliary Building serves to collect any equipment leakage during the recirculation of containment sump water. The Auxiliary Building ventilation system (Section 9.4) is isolated by the containment Phase A isolation signal. The Auxiliary Building gas treatment system (Section 9.4) then maintains the building at a negative pressure and processes any inleakage prior to release to the environment.

Post-accident hydrogen control within the containment is provided by the hydrogen mitigation system (Section 6.2.5). Distribution of the atmosphere within the containment is provided by the air return fan system (Section 6.8). The air return fan system also takes suction from each compartment to prevent stagnation and excessive accumulation of hydrogen.

Criterion 42 - Inspection of Containment Atmosphere Cleanup Systems

The containment atmosphere cleanup systems shall be designed to permit appropriate periodic inspection of important components, such as filter frames, ducts, and piping, to assure the integrity and capability of the systems.

Compliance

The emergency gas treatment system (Section 6.2) filtration train and fans and the containment purge filters (Section 9.4.6) are located in the Auxiliary Building and are designed to facilitate inspections. The dampers that control recirculation and exhaust of the emergency gas treatment system effluent are located inside the Shield Building and may be inspected during reactor shutdown.

The entire Auxiliary Building gas treatment system (Section 9.4.3) is located in the Auxiliary Building and is designed to facilitate inspection.

Criterion 43 - Testing of Containment Atmosphere Cleanup Systems

The containment atmosphere cleanup systems shall be designed to permit appropriate periodic pressure and functional testing to assure (1) the structural and leaktight integrity of its components, (2) the operability and performance of the active components of the systems such as fans, filters, dampers, pumps, and valves, and (3) the operability of the systems as a whole and, under conditions as close to design as practical, the performance of the full operational sequence that brings the systems into operation, including operation of applicable portions of the protection system, the transfer between normal and emergency power sources, and the operation of associated systems.

Compliance

The containment purge system (Section 9.4) is designed to permit testing to assure leaktightness of the filter trains; functional testing to assure operability of containment isolation valves; and performance testing to assure filter efficiency and to demonstrate the isolation valve closure in response to the accident mode isolation signal.

The emergency gas treatment system (Section 6.2) is designed to permit testing to assure leaktightness of the filtration trains; functional testing to assure operability of the fans, dampers, and instrumentation; and performance testing to assure overall operability of the system and to demonstrate the proper alignment of the system to the accident unit.

The Auxiliary Building gas treatment system (section 9.4) is designed to allow testing to assure the pressure and leaktightness of the filters, adsorbers, and the filtration train housing to assure the operability of the fans and dampers; and to assure the operability of the system as a whole. The system design will permit testing of the actuation signals, the isolation of the normal ventilation system, and the proper alignment of dampers.

The hydrogen mitigation system (Section 6.2.5) is designed to allow testing to assure the operability of the manual controls that place the systems in operation. The system is designed to permit, under conditions as close to design as practical, the operability of the system as a whole.

Criterion 44 - Cooling Water

A system to transfer heat from structures, systems, and components important to safety, to an ultimate heat sink shall be provided. The system safety function shall be to transfer the combined heat load of these structures, systems, and components under normal operating and accident conditions.

Suitable redundancy in components and features, and suitable interconnections, leak detection, and isolation capabilities shall be provided to assure that for onsite electric power system operation (assuming offsite power is not available) and for offsite electric power system operation (assuming onsite power is not available) the system safety function can be accomplished, assuming a single failure.

Compliance

A Seismic Category I Component Cooling System (CCS) (Section 9.2) is provided to transfer heat from the reactor coolant system reactor support equipment and engineered safety equipment to a Seismic Category I Essential Raw Cooling Water (ERCW) system (Section 9.2).

The CCS serves as an intermediate system and thus a barrier between potentially or normally radioactive fluids and the river water which flows in the ERCW system.

The CCS consists of two independent engineered safety subsystems, each of which is capable of serving all necessary loads under normal or accident conditions.

In addition to serving as the heat sink for the CCS, the ERCW system is also used as heat sink for the containment through use of the containment spray heat exchangers, and engineered safety equipment through use of compartment and space coolers. The ERCW system consists of two independent trains, each of which is capable of providing all necessary heat sink requirements. The ERCW system transfers heat to the ultimate heat sink (Section 9.2).

Electric power is discussed in Chapter 8.

Criterion 45 - Inspection of Cooling Water System

The cooling water system shall be designed to permit appropriate periodic inspection of important components, such as heat exchangers and piping, to assure the integrity and capability of the system.

Compliance

The integrity and capability of the component cooling water system (Section 9.2) and essential raw cooling water system (Section 9.2) will be monitored during normal operation by the Surveillance Instruction Program. Nonsafety related systems may be isolated temporarily for inspection. All major components will be visually inspected on a periodic basis.

The component cooling and essential raw cooling water pumps are arranged such that any pump may be isolated for inspection and maintenance while maintaining full plant operational capabilities.

Criterion 46 - Testing of Cooling Water System

The cooling water system shall be designed to permit appropriate periodic pressure and functional testing to assure (1) the structural and leaktight integrity of its components, (2) the operability and the performance of the active components of the system, and (3) the operability of the system as a whole and under conditions as close to design as practical, the performance of the full operational sequence that brings the system into operation for reactor shutdown and for LOCAs, including operation of applicable portions of the protection system and the transfer between normal and emergency power sources.

Compliance

The cooling water systems will be pressurized during plant operations; thus, the structural and leaktight integrity of each system and the operability and performance of their active components will be continuously demonstrated. In addition, normally idle portions of the piping system and idle components will be tested during plant shutdown. The emergency functions of the systems will be periodically tested out to the final actuated device in accordance with the Technical Specifications.

For details, see the discussions on electric power (Chapter 8), component cooling water (Section 9.2), essential raw cooling water (Section 9.2), and instrumentation and controls (Chapter 7).

3.1.2.5 Reactor Containment

Criterion 50 - Containment Design Basis

The reactor containment structure, including access openings, penetrations, and the containment heat removal system shall be designed so that the containment structure and its internal compartments can accommodate, without exceeding the design leakage rate and, with sufficient margin, the calculated pressure and temperature conditions resulting from any LOCA. This margin shall reflect consideration of (1) the effects of potential energy sources which have not been included in the determination of the peak conditions, such as energy in steam generators and energy from metal-water and other chemical reactions that may result from degraded emergency core cooling functioning, (2) the limited experience and experimental data available for defining accident phenomena and containment responses, and (3) the conservatism of the calculational model and input parameters.

Compliance

The containment structure, including access openings and penetrations, is designed with sufficient conservatism to accommodate, without exceeding the design leakage rate, the transient peak pressure and temperature associated with a postulated reactor coolant piping break up to and including a double-ended rupture of the largest reactor coolant pipe.

The containment design consists of a freestanding steel containment vessel and a separate outer reinforced concrete shield wall and roof. The ice condenser concept is used for energy absorption during a LOCA. The annular space between the containment vessel and the exterior shield wall forms a double barrier to fission products and is maintained at less than atmospheric pressure. The ice condenser, which is located inside the steel containment and consists of a suitable quantity of borated ice in a cold storage compartment, provides rapid energy absorption to maintain the containment vessel design pressure at a low level and to reduce the peak duration, thus reducing the potential for escape of fission products from the primary containment vessel.

The functional design of the containment is based upon the following assumptions and conditions:

(1) A design basis blowdown energy and mass release.

(2) Secondary energy released by safety injection.

(3) Carryover energy from zirconium-water reaction.

(4) Decay heat from the reactor at rated power.

(5) The single failure criterion is accommodated.

The internal design pressure of the containment is greater than the peak pressure occurring as the result of the complete blowdown of the reactor coolant through any rupture of the reactor coolant system up to and including the hypothetical double-ended severance of the largest reactor coolant pipe. The design pressure is not exceeded during any subsequent long-term pressure transient.

Refer to Section 3.8 for a description of containment, and to Section 6.2 for design basis details.

Criterion 51 - Fracture Prevention of Containment Pressure Boundary

The reactor containment boundary shall be designed with sufficient margin to assure that under operating, maintenance, testing, and postulated accident conditions (1) its ferritic materials behave in a nonbrittle manner and (2) the probability of rapidly propagating fracture is minimized. The design shall reflect consideration of service temperatures and other conditions of the containment boundary material during operation, maintenance, testing, and postulated accident conditions, and the uncertainties in determining (1) material properties, (2) residual, steady-state, and transient stresses, and (3) size of flaws.

Compliance

The containment vessel and its penetration sleeves meet the material, design and technical process requirements of ASME Boiler and Pressure Vessel Code, Section III, Class B. Charpy V-notch impact tests were made of the containment vessel material (ASTM A 516, Grade 70) 5/8 inch and greater, weld deposit, and the base metal weld heat affected zone employing a test temperature at least 30°F below minimum service temperature in accordance with ASME Code, Paragraph N-1210. This test measured the ductile to brittle transition with allowable values for energy absorption given in Tables N-421 and N-422. It insures that the material used will not behave in a brittle manner and that rapidly propagating fracture is minimized. The containment boundary design considered uncertainties in material properties, residual, steady-state and transient stresses, and material flaws along with conservative allowable stress levels for all stressed elements of the containment boundary. All material was examined for flaws that would adversely affect the performance of the material in its intended location. See Section 6.2 for further details.

Criterion 52 - Capability for Containment Leakage Rate Testing

The reactor containment and other equipment which may be subjected to containment test conditions shall be designed so that periodic integrated leakage rate testing can be conducted at containment design pressure.

Compliance

The reactor containment design permitted overpressure strength testing during construction and permits preoperational integrated leakage rate testing at containment design pressure and at reduced pressure, in accordance with Appendix J, 10 CFR 50. The reactor containment and other equipment which may be subjected to containment test conditions are designed so that periodic integrated leakage rate testing can be conducted at containment design pressure. All equipment which may be subjected to the test pressure is either vented to the containment, removed from the containment during the test, or designed to withstand the containment design pressure without damage.

The preoperational integrated leak tests at peak pressure verify that the containment, including the isolation valves and the resilient penetration seals, leaks less than the allowable value of 0.25 weight percent per day at peak pressure.

Details concerning the conduct of periodic integrated leakage rate tests are in Section 6.2.

Criterion 53 - Provisions for Containment Testing and Inspection

The reactor containment shall be designed to permit (1) appropriate periodic inspection of all important areas, such as penetrations, (2) an appropriate surveillance program, and (3) periodic testing at containment design pressure of the leaktightness of penetrations which have resilient seals and expansion bellows.

Compliance

The reactor containment and the containment isolation system (Section 6.2) are designed so that:

(1) Integrated leak rate tests can be run during plant lifetime (see compliance to Criterion 52).

(2) Visual inspections can be made of all important areas, such as penetrations.

(3) An appropriate surveillance program can be maintained (see Section 6.2).

(4) Periodic testing at containment design pressure of the leaktightness of isolation valves and penetrations which have resilient seals and expansion bellows is possible.

(5) The operability of the containment isolation system can be demonstrated periodically.

In testing locally the resilient seals and expansion bellows leakages, the guidelines for Type B tests in Appendix J to 10 CFR 50 will be followed.

Criterion 54 - Piping Systems Penetrating Containment

Piping systems penetrating primary reactor containment shall be provided with leak detection, isolation, and containment capabilities having redundance, reliability, and performance capabilities which reflect the importance to safety of isolating these piping systems. Such piping systems shall be designed with a capability to test periodically the operability of the isolation valves and associated apparatus and to determine if valve leakage is within acceptable limits.

Compliance

Containment isolation features are classified as Seismic Category I. These components required quality assurance measures which enhance reliability. The containment isolation design provides for a double barrier at the containment penetration in those fluid systems that are not required to function following a design basis event.

All piping systems penetrating the containment, in so far as practical, have been provided with test vents and test connections or have other provisions to allow periodic leak testing as required. Section 6.2.4.4 has further details on testing.

See Section 6.2.4 for general containment isolation details and Section 6.2.4.3 for exceptions to General Design Criteria 54, 55, 56, and 57.

Criterion 55 - Reactor Coolant Pressure Boundary Penetrating Containment

Each line that is part of the reactor coolant pressure boundary and that penetrates primary reactor containment shall be provided with containment isolation valves as follows, unless it can be demonstrated that the containment isolation provisions for a specific class of lines, such as instrument lines, are acceptable on some other defined basis:

(1) One locked closed isolation valve inside and one locked closed isolation valve outside containment; or

(2) One automatic isolation valve inside and one locked closed isolation valve outside containment; or

(3) One locked closed isolation valve inside and one automatic isolation valve outside containment. A simple check valve may not be used as the automatic isolation valve outside containment; or

(4) One automatic isolation valve inside and one automatic isolation valve outside containment. A simple check valve may not be used as the automatic isolation valve outside containment.

Isolation valves outside containment shall be located as close to containment as practical, and automatic isolation valves shall be designed to take the position that provides greater safety upon loss of actuating power.

Other appropriate requirements to minimize the probability or consequences of an accidental rupture of these lines or of lines connected to them shall be provided as necessary to assure adequate safety. Determination of the appropriateness of these requirements, such as higher quality in design, fabrication, and testing, additional provisions for inservice inspection, protection against more severe natural phenomena, and additional isolation valves and containment, shall include consideration of the population density, use characteristics, and physical characteristics of the site environs.

Compliance

The reactor coolant pressure boundary is defined as those piping systems and components which contain reactor coolant at design pressure and temperature. With the exception of the reactor coolant sampling lines, the entire reactor coolant pressure boundary, as defined above, is located entirely within the containment structure. All sampling lines are provided with remotely operated valves for isolation in the event of a failure. These valves also close automatically on a containment isolation signal.

All other piping and components which may contain reactor coolant are low pressure, low temperature systems which would yield minimal environmental doses in the event of failure.

The sampling system and low-pressure systems are described in Section 9.3. An analysis of malfunctions in these systems is included in Chapter 15.

Criterion 56- Primary Containment Isolation

Each line that connects directly to the containment atmosphere and penetrates primary reactor containment shall be provided with containment isolation valves as follows, unless it can be demonstrated that the containment isolation provisions for a specific class of lines, such as instrument lines, are acceptable on some other defined basis:

(1) One locked closed isolation valve inside and one locked closed isolation valve outside containment; or

(2) One automatic isolation valve inside and one locked closed isolation valve outside containment; or

(3) One locked closed isolation valve inside and one automatic isolation valve outside containment. A simple check valve may not be used as the automatic isolation valve outside containment; or

(4) One automatic isolation valve inside and one automatic isolation valve outside containment. A simple check valve may not be used as the automatic isolation valve outside containment.

Isolation valves outside containment shall be located as close to containment as practical, and automatic isolation valves shall be designed to take the position that provides greater safety upon loss of actuating power.

Compliance

At least two barriers are provided between the atmosphere outside the containment and the containment atmosphere, the reactor coolant system, or closed systems which are assumed vulnerable to accident forces.

Redundant valving is provided for piping that is open to the atmosphere and to the containment atmosphere. Additional details can be found in Section 6.2.

Criterion 57 - Closed Systems Isolation Valves

Each line that penetrates primary reactor containment and is neither part of the reactor coolant pressure boundary nor connected directly to the containment atmosphere shall have at least one containment isolation valve which shall be either automatic, or locked closed, or capable of remote manual operation. This valve shall be outside containment and located as close to the containment as practical. A simple check valve may not be used as the automatic isolation valve.

Compliance

Those lines that penetrate the containment, that do not communicate with either the reactor coolant pressure boundary or the containment atmosphere, and that are not affected by LOCA forces, are defined as closed systems. All lines penetrating the containment are designed to meet this GDC.

See Section 6.2.4 for a discussion of containment isolation valves.

3.1.2.6 Fuel and Radioactivity Control

Criterion 60 - Control of Releases of Radioactive Materials to the Environment

The nuclear power unit design shall include means to control suitably the release of radioactive materials in gaseous and liquid effluents and to handle radioactive solid wastes produced during normal reactor operation, including anticipated operational occurrences. Sufficient holdup capacity shall be provided for retention of gaseous and liquid effluents containing radioactive materials, particularly where unfavorable site environmental conditions can be expected to impose unusual operational limitations upon the release of such effluents to the environment.

Compliance

Liquid, gaseous, and solid radioactive waste processing equipment is provided. The principles of filtration, demineralization, evaporation, solidification and storage for decay are utilized as described in Chapter 11. Process monitoring is provided to control this equipment and regulate releases to the environment as described in Section 11.4.

Criterion 61 - Fuel Storage and Handling and Radioactivity Control

The fuel storage and handling, radioactive waste, and other systems which may contain radioactivity shall be designed to assure adequate safety under normal and postulated accident conditions. These systems shall be designed (1) with a capability to permit appropriate periodic inspection and testing of components important to safety, (2) with suitable shielding for radiation protection, (3) with appropriate containment, confinement, and filtering systems, (4) with a residual heat removal capability having reliability and testability that reflects the importance to safety of decay heat and other residual heat removal, and (5) to prevent significant reduction in fuel storage coolant inventory under accident conditions.

Compliance

The spent fuel pool and cooling system, fuel handling system, radioactive waste processing systems, and other systems that contain radioactivity are designed to assure adequate safety under normal and postulated accident conditions.

(1) Components are designed and located such that appropriate periodic inspection and testing may be performed.

(2) All areas of the plant are designed with suitable shielding for radiation protection based on anticipated radiation dose rates and occupancy as discussed in Section 12.1.

(3) Individual components which contain significant radioactivity are located in confined areas which are adequately ventilated through appropriate filtering systems.

(4) The spent fuel cooling systems provide cooling to remove residual heat from the fuel stored in the spent fuel pool. The system is designed for testability to permit continued heat removal.

(5) The spent fuel pool is designed such that no postulated accident could cause excessive loss of coolant inventory.

Radioactive waste treatment systems are located in the Auxiliary Building, which contains or confines leakage under normal and accident conditions.

The Auxiliary Building gas treatment system includes charcoal filtration which minimizes radioactive material release associated within a postulated spent fuel handling accident.

Fuel storage and handling is discussed in Section 9.1, and radioactive waste management in Chapter 11.

Criterion 62 - Prevention of Criticality in Fuel Storage and Handling

Criticality in the fuel storage and handling system shall be prevented by physical systems or processes, preferably by use of geometrically safe configurations.

Compliance

The restraints and interlocks provided for safe handling and storage of new or spent fuel are discussed in Section 9.1.

The center-to center distance between adjacent spent fuel assemblies together with the use of fixed Boral neutron absorber panels in the storage racks and burnup credit administrative controls on fuel assembly placement are sufficient to ensure subcriticality, even if unborated water is used to fill the spent fuel storage pool. Credit for borated water is permitted to maintain subcriticality for inadvertent misplacement of a fuel assembly, e.g., loading of a fresh fuel assembly in a storage cell designated for exposed fuel or placement outside of and adjacent to a rack module.

Layout of the fuel handling area is such that the spent fuel casks will never be required to traverse the spent fuel storage pool during removal of the spent fuel assemblies.

Criterion 63 - Monitoring Fuel and Waste Storage

Appropriate systems shall be provided in fuel storage and radioactive waste systems and associated handling area (1) to detect conditions that may result in loss of residual heat removal capability and excessive radiation levels and (2) to initiate appropriate safety actions.

Compliance

Failure in the spent fuel cooling system will result in control room annunciation and local temperature indication.

High radiation in the spent fuel storage (refuel floor) area will produce the following alarms:

(1) Main Control Room alarm from the spent fuel pool area accident monitors.
(2) Local and Main Control Room alarms from the refuel floor area monitor.
(3) Local alarm from a portable continuous air monitor located on the refuel floor.
(4) Main Control Room alarm from the Auxiliary Building Ventilation Radiation Monitor for high airborne radiation in the spent fuel storage area.

High radiation in the waste packagi.ng area will result in the following alarms:

(1) Main Control Room and local alarms from the waste packaging area monitor.
(2) Local alarms from a portable continuous air monitor located in the area.
(3) Main Control Room alarm from the Auxiliary Building Ventilation Radiation Monitor for high airborne radiation in the waste packaging area.

See Sections 9.1 and 12.3 and Chapter 11 for further details.

Criterion 64 Monitoring Radioactivity Releases

Means shall be provided for monitoring the reactor containment atmosphere, spaces containing components for recirculation of LOCA fluids, effluent discharge paths, and the plant environs for radioactivity that may be released from normal operations, including anticipated operational occurrences, and from postulated accidents.

Compliance

The facility contains means for monitoring the containment atmosphere and all other important areas during both normal and accident conditions to detect and measure radioactivity which could be released under any conditions. The monitoring system includes area gamma monitors, atmospheric monitors and liquid monitors with full indication in the control room. Alarms are provided to warn of high radioactivity.

Chapter 11 discusses the process and effluent radiation monitoring systems. Chapter 12 discusses the area and airborne radiation monitoring systems.

REFERENCES

None

3.2 CLASSIFICATION OF STRUCTURES, SYSTEMS, AND COMPONENTS

3.2.1 Seismic Classifications

The Watts Bar Nuclear Plant structures, systems, and components which perform a primary safety function have been designed to remain functional in the event of a Safe Shutdown Earthquake (SSE). These structures, systems, and components, designated as Seismic Category I, are those necessary to assure:

(1) The integrity of the reactor coolant pressure boundary.

(2) The capability to shut down the reactor and maintain it in a safe shutdown condition, or

(3) The capability to prevent or mitigate the consequences of accidents which could result in potential offsite exposures comparable to or in excess of the guideline exposures of 10 CFR Part 100.

These structures, systems, and components are classified in accordance with Regulatory Guide 1.29 unless exception is taken in detailed classificaition information provided in other sections of the FSAR, such as Table 3.2-2a, 3.2-6, etc.

Piping, pumps, valves, and other fluid system components which must retain limited structural integrity because their failure could jeopardize to an unacceptable extent the achievement of a primary safety function, because they form an interface between Seismic Category I and non-Seismic Category I plant features, or because they perform a secondary safety function, are designated by TVA as Seismic Category I(L) (i.e., limited requirements). Those fluid containing elements which are included in Seismic Category I(L) are seismically qualified to meet the intent of Position 2 of Regulatory Guide 1.29. Seismic Category 1(L) is subdivided into the following categories 1L(A) Pressure boundary and position retention and 1L(B) position retention.

Where portions of mechanical systems are Category I or I(L) and the remaining portions not seismically classified, the systems have been seismically qualified to a terminating anchor (or other appropriate analysis problem termination) beyond the defined boundary such as a valve, thus meeting Position 3 of Regulatory Guide 1.29.

All Category I safety-related structures, and portions of mechanical and electrical systems and components are listed in Tables 3.2-1, 3.2-2, 3.2-2a, 3.2-2b and 3.2-3. Those Category I(L) portions of mechanical systems are also listed in Table 3.2-2.

3.2.2 System Quality Group Classification

Fluid system components for the Watts Bar Nuclear Plant that perform a primary safety function are identified by TVA Classes A, B, or C (see Section 3.2.2.7 for HVAC Safety Classifications). These piping classes are assigned to fluid systems based on the ANS Safety Classes 1, 2a, and 2b, respectively, which are assigned to nuclear power plant equipment per the August 1970 Draft of ANSI N18.2, "Nuclear Safety Criteria for the

Design of Stationary Pressurized Water Reactor Plants." Fluid system components whose postulated failure would result in potential offsite doses that exceed 0.5 Rem to the whole body, or its equivalent to any part of the body, are identified as TVA Class D and are based on ANSI N18.2 (Aug., 1970 draft) Safety Class 3 and Regulatory Guide 1.26. The TVA piping classification system for WBNP does not conform strictly to the guidance of Regulatory Guide 1.26 (which was not in effect on the docket date for the Construction Permit). The ANS safety classification of each component has been considered in the various aspects of design, fabrication, construction, and operation.

3.2.2.1 Class A

Class A applies to reactor coolant pressure boundary components whose failure could cause a loss of reactor coolant which would not permit an orderly reactor shutdown and cool down assuming that makeup is only provided by the normal makeup system. Branch piping 3/8 inch inside diameter and smaller, or protected by a 3/8 inch diameter or smaller orifice, is exempted from Class A requirements. The branch piping for the pressurizer steam space instrumentation nozzles (0.83 inch inside diameter, or smaller) is also exempted from Class A requirements.

The components which are within the Reactor Coolant Pressure Boundary (RCPB) and meet all the following requirements may be classified as TVA Class G:

(1) Piping and associated components in the RCPB which penetrate containment excluding the actual penetration and its associated components.

(2) Piping and associated components which perform no primary safety function.

(3) Piping and associated components which are isolated by a normally closed valve off a line in the RCPB that meets the exclusion requirements of 10 CFR Part 50.55a paragraphs (c) (1) and (c) (2). An example would be the ECCS check valve leak test lines.

3.2.2.2 Class B

Safety Class B applies to those components of safety systems necessary to fulfill a system safety function. The classification is specifically applicable to containment and to components of those safety systems, or portions thereof, through which reactor coolant water flows directly from the reactor coolant system or the containment sump.

3.2.2.3 Class C

Class C applies to components of those safety systems that are important to safe operation and shutdown of the reactor but that do not recirculate reactor coolant.

3.2.2.4 Class D

Class D applies to components not in TVA Class A, B, or C whose failure would result in release to the environment of gaseous radioactivity normally held up for radioactive decay. This is being interpreted as those portions of systems whose postulated failure would result in calculated potential offsite doses that exceed 0.5 rem to the whole body or its equivalent to any part of the body.

3.2.2.5 Relationship of Applicable Codes to Safety Classification for Mechanical Components

The applicable codes used for the design, material selection, and inspection of components for the various safety classes are shown in Table 3.2-4. The applicable TVA classification and ANS Safety Classification for each of the fluid systems are tabulated in Table 3.2-2. TVA classifications are also delineated on flow diagrams which have been included as figures in those sections of the FSAR where the systems are discussed in detail.

3.2.2.6 Nonnuclear Safety Class (NNS)

Components that are used in Seismic Category I structures whose failure would not result in a release of radioactive products and are not required to function during an accident or malfunction within the reactor coolant pressure boundary have been assigned TVA Classifications G or K. Since these components complement components having a primary safety function during normal operation and may be in close proximity to them, they are seismically qualified as Seismic Category I(L) to the extent necessary to prevent an unacceptable influence on Safety Class equipment during a seismic event. Thus the minimum capability of primary system components is not compromised by the failure of a Class G or K component during a seismic event. Components which are assigned to TVA Class H or L, located inside Seismic Category I structures, are also designed as Seismic Category I(L). The applicable codes, along with the seismic classifications used for the design of the components covered by these classifications, are shown in Table 3.2-5. TVA Class P is assigned to specific sense lines located (in part or totally) in a non-seismic area.

3.2.2.7 Heating, Ventilation and Air Conditioning (HVAC) Safety Classification

Those portions of the HVAC Systems which are safety related have been assigned TVA classifications and have been designed to Seismic Category I and I(L) specifications as applicable. All equipment, components, duct work, etc., in the August 1970 Draft that are ANSI N18.2 Safety Classes 2a and 2b perform primary safety functions and are designed to Seismic Category I requirements, except as exempted in Table 3.2-6. Portions of systems not performing a safety function may need a degree of seismic qualification because their failure could produce an unacceptable influence on the performance of safety functions. These are designed to Seismic Category I(L) requirements. The applicable codes along with the seismic qualifications used for the design of the HVAC ducting are shown in Table 3.2-6 . See Sections 3.7.3.17 and 3.7.3.18 for details of seismic analysis and design of HVAC duct and duct support systems.

3.2.3 Code Cases and Code Editions and Addenda

3.2.3.1 TVA Design and Fabrication

The Code of Record of Section III of the ASME Code applied to systems within TVA's scope is the 1971 Edition with Addenda through Summer 1973. The use of later

Edition and Addenda, as permitted by paragraph NA-1140 of the ASME Code, is controlled to ensure the following:

(a) Later Edition and Addenda used has been accepted by the NRC through incorporation by reference in 10 CFR 50.55a.

(b) Related requirements necessary to support use of later Edition and Addenda are implemented in accordance with NA-1140.

(c) Code Cases used have been accepted by the NRC through incorporation by reference in either Regulatory Guide 1.84 or Regulatory Guide 1.85.

(d) Additional requirements added by either Regulatory Guide 1.84 or Regulatory Guide 1.85 are implemented.

A listing of Code Cases and provisions of later Code editions and addenda which have been used for design and fabrication is given in Table 3.2-7. A similar listing of Code Cases and provisions of later Code editions and addenda used in analysis of fluid systems is given in Section 3.7.3.8.1. Another similar listing for the RCS is given in Section 5.2.1.4. Code cases and provisions of later Code Editions and Addenda associated with Inservice Inspection and Inservice Testing are found in the Inservice Inspection and Inservice Testing programs. Exceptions to the system classification Code requirements associated with Generic Letter 89-09 may be found in notes on the flow diagrams.

3.2.3.2 Purchased Materials and Components

The Code of Record for components ordered by TVA is determined in accordance with 10 CFR 50.55a, footnote 5. Material ordered by TVA and supplied with certification to a later Edition and Addenda is controlled by a comparison of the Edition and Addenda to which it is certified to the Code of Record applicable to the application in which it is used. Deviations from the applicable Code of Record are reconciled prior to use of the material.

Material procured prior to the initiation of the Acceptable Suppliers List (ASL) program (approximately May 1978) has been addressed through an NRC approved alternative to the ASME Code paragraph NA-3451(a)[1]. Material

- procured as ASTM material,
- installed or to be installed in an ASME system,
- whose proof of survey or qualification by TVA of the manufacturer's quality assurance program at the time of procurement cannot be retrieved, and
- whose material specification is identical to the requirements of ASME Section II as stated by the ASME material specification,

is acceptable for use assuming all other attributes of the material and the documentation conform to ASME Code requirements.

REFERENCES

1. Letter from B.D. Liaw, NRC, to O. D. Kingsley, TVA, dated March 15, 1990, “NRC Inspection Report Nos. 50-390/90-02 and 50-391/90-02.”

2. Letter from Frederick J. Hebdon, NRR, to Mark O. Medford, TVA, dated February 22, 1993.

Table 3.2-1 Category I Structures

1.	Reactor Building (Shield Building, Steel Containment Vessel, and Interior Concrete)
2.	Auxiliary - Control Building
	a. Auxiliary Building portion
	b. Additional Equipment Building portion
	c. Control bay portion
	d. Waste packaging area
3.	Condensate Demineralizer Waste Evaporator Building
4.	Class 1E Electrical Systems Structures (Manholes, Handholes, and Conduit Banks)
5.	Diesel Generator Building
6.	ERCW Pipe Tunnels and RWST Foundations
7.	ERCW Structures
8.	North Steam Valve Room
9.	Intake Pumping Station and Retaining Walls
10.	Additional Diesel Generator Building
11.	Refueling Water Storage Tank (RWST).
12.	Underground Barrier.
13.	ERCW Standpipe Structures I and II and ERCW Discharge Overflow Structure.

Table 3.2-2 Summary of Criteria - Mechanical System Components
(Page 1 of 17)

Component	Scope (1)	TVA/ANS Safety Class (2)	Code (3)	QA Required (4)	Location (5)	Rad Source (6)	Seismic (7)
Reactor Vessel	W	A	(13)	X	C	X	I
Full Length CRDM Housing	W	A	III-1	X	C	X	I
CRDM Head Adapter Plugs	W	A	III-1	X	C	X	I
Steam Generators (Tube Side)	W	A	III-1	X	C	X	I
(Shell Side)	W	A(17)	III-1	X	C	X	I
Pressurizer	W	A	III-1	X	C	X	I
Reactor Coolant Pipe	W	A	III-1	X	C	X	I
Reactor Coolant Fittings	W	A	III-1	X	C	X	I
Reactor Coolant Fabricated Piping	W	A	III-1	X	C	X	I
Reactor Coolant Crossover Legs	W	A	III-1	X	C	X	I
Reactor Coolant Thermowell	W	A	III-1	X	C	X	I
Thimble Guide Tubing	W	A	III-1	X	C	X	I
Thimble Guide Couplings	W	A	III-1	X	C	X	I
Incore Instrument Thimble Assembly	W	B	III-2	X	C	X	I
Loop Bypass Line	W	A	III-1	X	C	X	I
Pressurizer Safety Valves	W	A	III-1	X	C	X	I
Power Operated Relief Valves	W	A	III-1	X	C	X	I
Pressurizer Relief Tank	W	G	VIII	X	C	P	I(L)

Table 3.2-2 Summary of Criteria - Mechanical System Components (Continued)
(Page 2 of 17)

Component	Scope (1)	TVA/ANS Safety Class (2)	Code (3)	QA Required (4)	Location (5)	Rad Source (6)	Seismic (7)
Reactor Coolant Pump	W	A	III-1	X	C	X	I
RCP Casing	W	A	III-1	X	C	X	I
Main Flange	W	A	III-1	X	C	X	I
Thermal Barrier	W	A	III-1	X	C	X	I
Thermal Barrier Heat Exchanger	W	C	(14)	X	C	X	I
No. 1 Seal Housing Bolts	W	A	III-1	X	C	X	I
Upper Seal Housing	W	B	III-1	X	C	X	I
Pressure Retaining Bolting	W	A	III-1	X	C	X	I
RCP Motor	W	2b	NEMA-MG1	X	C	-	I
Motor Rotor	W	2b	NA	X	C	-	I
Motor Shaft	W	2b	NA	X	C	-	I
Shaft Coupling	W	2b	NA	X	C	-	I
Spool Piece	W	2b	NA	X	C	-	I
Flywheel	W	2b	NA	X	C	-	I
Bearing (Motor Upper Thrust)	W	2b	NA	X	C	-	I
Motor Bolting	W	2b	NA	X	C	-	I
Motor Stand	W	2b	NA	X	C	-	I
Motor Frame	W	2b	NA	X	C	-	I

Table 3.2-2 Summary of Criteria - Mechanical System Components (Continued)
(Page 3 of 17)

Component	Scope (1)	TVA/ANS Safety Class (2)	Code (3)	QA Required (4)	Location (5)	Rad Source (6)	Seismic (7)
Upper Oil Reservoir (UOR)	W	2b	NA	X	C	P	I
Upper Oil Cooler	W	2b	(14)	X	C	P	I
Lube Oil Piping	W	2b	(14)	X	C	P	I
Lower Oil Reservoir (LOR)	W	2b	NA	X	C	P	I
LOR Cooling Coil - CC (supports only)	W	2b	NA	X	C	P	I
Motor Air Coolers	W	-	-	X	C	-	I(L)
Safety Injection System							
Safety Injection Pumps	W	B	III-2	X	AB	X	I
Accumulators (9)	W	B	III-2	X	C	P	I
Boron Injection Tank	W	B	III-2	X	AB	X	I
Refueling Water Storage Tank	T	B	III-2	X	O	P	I
Residual Heat Removal System							
RHR Pumps	W	B	III-2	X	AB	X	I
RHR Heat Exchangers (Tube)	W	B	III-2	X	AB	X	I
(Shell)	W	C	III-3	X	AB	P	I

Table 3.2-2 Summary of Criteria - Mechanical System Components (Continued)
(Page 4 of 17)

Component	Scope (1)	TVA/ANS Safety Class (2)	Code (3)	QA Required (4)	Location (5)	Rad Source (6)	Seismic (7)
Containment Spray System							
CS Pumps	T	B	III-2	X	AB	X	I
CS Heat Exchangers (Tube)	W	B	III-2	X	AB	X	I
(Shell)	W	C	III-3	X	AB	P	I
CS Nozzles	T	B	-	X	C	P	I
Primary Water Make-Up System							
Pump	T	G	ANSI B31.1	X	AB	-	I(L)
Tank Unit 1	T	G(22)	Note 25	X	O	-	I(L)
Tank Unit 2	T	G(26)	Note 26	X	O	---	I(L)
Chemical and Volume Control System Pumps							
Charging, Centrifugal	W	B	P&V-II	X	AB	X	I
Boric Acid Transfer	W	C	P&V-III	X	AB	-	I
Heat Exchangers							
Regenerative	W	B	III-2	X	C	X	I
Letdown (Tube)	W	B	III-2	X	AB	X	I
(Shell)	W	C	III-3	X	AB	P	I
Excess Letdown (Tube)	W	B	III-2	X	C	X	I
(Shell)	W	B	III-2	X	C	P	I
Seal Water (Tube)	W	B	III-2	X	AB	X	I
(Shell)	W	C	III-3	X	AB	P	I
Tanks							
Volume Control	W	B	III-2	X	AB	X	I
Boric Acid	W	C	III-3	X	AB	P	I
Boric Acid Batching	W	G	VIII	X	AB	-	I(L)

Table 3.2-2 Summary of Criteria - Mechanical System Components (Continued)
(Page 5 of 17)

Component	Scope (1)	TVA/ANS Safety Class (2)	Code (3)	QA Required (4)	Location (5)	Rad Source (6)	Seismic (7)
Chemical Mixing	W	G	VIII	X	AB	-	I(L)
Resin Fill	W	G	VIII	X	AB	-	I(L)
Demineralizers							
Mixed Bed	W	D	III-3	X	AB	X	I
Cation	W	D	III-3	X	AB	X	I
Steam Generator Blowdown System							
SG Blowdown Isolation Valves	T	B	III-2	X	AB	P	I
SG Blowdown Heat Exchangers	T	-	VIII	-	TB	P	-
Flash Tank	T	-	VIII	-	TB	P	-
Flash Tank Pumps	T	-	HIS	-	TB	P	-
Compressed Air System							
Service & Control Air Subsystem							
Compressors	T	H	-	-	TB	-	-
Receiver Tanks	T	H	VIII	-	TB	-	-
Air Dryers	T	H	VIII	-	TB	-	-
Auxiliary Control Air Subsystem							
Compressors	T	(19)	-	X	AB	-	I
Receiver Tanks	T	(19)	VIII	X	AB	-	I
Air Dryers	T	C	(14)	X	AB	-	I
Ice Condenser							
Ice Baskets	W	C	-	X	C	-	I
Lower Inlet Doors	W	C	-	X	C	-	I

Table 3.2-2 Summary of Criteria - Mechanical System Components (Continued)
(Page 6 of 17)

Component	Scope (1)	TVA/ANS Safety Class (2)	Code (3)	QA Required (4)	Location (5)	Rad Source (6)	Seismic (7)
Lattice Frames	W	C	-	X	C	-	I
Lattice Frame Columns	W	C	-	X	C	-	I
Lower Support Structure	W	C	-	X	C	-	I
Intermediate Deck Doors	W	C	-	X	C	-	I
Wall Panels	W	C	-	X	C	-	I
Floor Structures	W,T	C	-	X	C	-	I
Top Deck Doors	W	C	-	X	C	-	I
Air Handling Unit Supports	W	C	-	X	C	-	I
Top Deck Beams	W	C	-	X	C	-	I
Refrigeration System	W	-	-	X	C,AB	-	I(L)
Ice Machine	W	-	-	X	AB	-	I(L)
Ice Condenser Bridge Crane	W	-	-	X	C	-	I(L)
Floor Drain Gate	W	C	-	X	C	-	I
Containment Isolation System Valves	T	B	III-2	X	C,AB	X,P	I
Air Return Fans	T	(11)	AMCA IEEE	X	C	-	I
Component Cooling System							
Pumps	T	C	III-3	X	AB	P	I
Heat Exchangers (Tube)	T	C	III-3	X	AB	-	I
(Shell)	T	C	III-3	X	AB	P	I
Surge Tank	T	C	III-3	X	AB	P	I
Valve (Containment Isolation)	T	B	III-2	X	C	-	I
Valves	T	C	III-3	X	AB,C	-	I

Table 3.2-2 Summary of Criteria - Mechanical System Components (Continued)
(Page 7 of 17)

Component	Scope (1)	TVA/ANS Safety Class (2)	Code (3)	QA Required (4)	Location (5)	Rad Source (6)	Seismic (7)
Valves	T	G	B31.1	X	AB	-	I(L)
Valves	T	H	B31.1	-	CDWEB	-	
Seal Leakage Return Unit	T	L	-	X	AB	-	I(L)
Radioactive Waste Disposal System							
Tanks							
Laundry & Hot Shower	W	G	VIII	X	AB	X	I(L)
Chemical Drain	W	G	VIII	X	AB	X	I(L)
Reactor Coolant Drain	W	G	VIII	X	C	X	I(L)
Tritiated Drain Collector	W	G	VIII	X	AB	X	I(L)
Waste Condensate (See Note 23)	W	H	VIII	X	AB	X	I(L)
Spent Resin Storage	W	D	III-3	X	AB	X	I
Gas Decay	W	D	III-3	X	AB	X	I
Floor Drain Collector	W	G	VIII	X	AB	X	I(L)
CVCS Monitor	W	G	III	X	AB	P	I(L)
Cask Decontamination Collector	T	G	----	X	AB	P	I(L)
Pumps							
Reactor Coolant Drain Tank Pumps	W	G	B31.1	X	C	X	I(L)
Chemical Drain Tank Pump	W	G	B31.1	X	AB	X	I(L)
Laundry & Hot Shower Tank Pump	W	G	B31.1	X	AB	X	I(L)
Tritiated Equipment Drain Sump Pumps	W	G	B31.1	X	AB	X	I(L)
Waste Condensate Pumps (See Note 23)	W	H	B31.1	X	AB	X	I(L)
Tritiated Drain Collector Tank							
Discharge Pump	W	G	B31.1	X	AB	X	I(L)

Table 3.2-2 Summary of Criteria - Mechanical System Components (Continued)
(Page 8 of 17)

Component	Scope (1)	TVA/ANS Safety Class (2)	Code (3)	QA Required (4)	Location (5)	Rad Source (6)	Seismic (7)
Floor Drain Collector Tank Discharge Pump	W	G	B31.1	X	AB	X	I(L)
Aux. Condensate Demin Waste Evap Feed Pump (See Note 23)	W	G	B31.1	X	AB	X	I(L)
CVCS Monitor Tank Pump	W	G	B31.1	X	AB	P	I(L)
Cask Decon Collector Tank Pump	T	G	B31.1	X	AB	P	I(L)
Component							
Containment Pit Sump Pumps	W	G	B31.1	X	C	X	I(L)
AB Floor & Equip Drain Sump Pumps	W	G	B31.1	X	AB	P	I(L)
RB Floor & Equip. Drain Sump Pump	T	G	B31.1	X	C	X	I(L)
RB Floor & Equip Drain Pocket Sump Pump	T	G	B31.1	X	C	X	I(L)
AEB Floor & Equip. Drain Sump Pump	T	G	B31.1	X	AEB	P	I(L)
Miscellaneous							
Waste Gas Compressor Pkg.	W	D	III-3	X	AB	X	I
Waste Gas Filter	T	G	VIII	X	AB	X	I(L)
Nitrogen Manifold	T	G	-	X	AB	-	I(L)
Hydraulic Compactor	W	-	-	-	SB	P	-
Laundry Tank Basket Strainer	W	G	VIII	X	AB	P	I(L)
Cond Demin Waste Evaporator (See Note 23)	T	H	III-3	X	CDWEB	P	-

Table 3.2-2 Summary of Criteria - Mechanical System Components (Continued)
(Page 9 of 17)

Component	Scope (1)	TVA/ANS Safety Class (2)	Code (3)	QA Required (4)	Location (5)	Rad Source (6)	Seismic (7)
Fire Protection System							
Valves - Flood Mode & CI	T	C	III-3	X	C,AB,O,B,P	-	I
Valves - Balance of System	T	G	B31.1, UL/FM	X	C,AB,O,B,P,CB, DB,SB,CDWEB	-	I(L)
Fire Pumps (vertical turbine)	T	C	III-3	X	O	-	I
Station Ventilation System							
Containment Ventilation							
Containment Purge							
Fans (excluding Inst. Rm. Fan)	T	(11)	AMCA	X	AB	-	I(L)
Filters	T	(11)	-	X	AB	X	I
Dampers	T	(11)	-	X	AB	X	I
Ductwork	T	(11)	SMACNA	X	C,AB	X	I/I(L) (See Note20)
Upper Compartment CRDM & Instrument Room Cooling	T		---	X	C	P	I(L)
Fan/Coil Units	T	-	AMCA	X	C	P	I(L) (See Note 12)
Supply Air Filters	T	(11)	-	X	AB	-	I(L)
Lower Compartment Cooling Units							
Fans	T	(11)	AMCA	X	C	-	I
Motors	T	(11)	IEEE	X	C		I

Table 3.2-2 Summary of Criteria - Mechanical System Components (Continued)
(Page 10 of 17)

Component	Scope (1)	TVA/ANS Safety Class (2)	Code (3)	QA Required (4)	Location (5)	Rad Source (6)	Seismic (7)
Coils	T	-	ARI	X	C	P	I(L)(See Note 12)
Backdraft Dampers	T	(11)	ASME	X	C	-	I
Instrumentation/Controls	T	(11)	IEEE	X	C/CB	-	I
Ductwork/Accessories	T	(11)	SMACNA	X	C	P	I
Auxiliary Bldg. Ventilation							
Fan/Coil Units	T	(11)	AMCA	X	AB	-	I(L)
Filters	T	(11)	-	X	AB	-	I(L)
ESF Room Coolers	T	(11)	-	X	AB	P	I
Auxiliary Board Rooms Air-conditioning System	T	(11)	AMCA,ARI	X	AB	-	I
Shutdown Board Rooms Air-conditioning System	T	(11)	AMCA,ARI	X	AB	-	I
Other Air Conditioning Systems	T	(11)	AMCA,ARI	X	AB	-	I(L)
Control Bldg. Ventilation							
Fan	T	(11)	-	X	CB	-	I
Filters	T	(11)	-	X	CB	X	I
Air Conditioning Unit (MCR)	T	(11)	AMCA,ARI	X	CB	-	I
Air Conditioning Unit (Elec. Bd. Rm.)	T	(11)	AMCA,ARI	X	CB	-	I
RB Inst Rm Air Conditioning System	T	(11)	AMCA,ARI	X	RB	-	I(L)(See Note 21)
Diesel Bldg. Ventilation							

Table 3.2-2 Summary of Criteria - Mechanical System Components (Continued)
(Page 11 of 17)

Component	Scope (1)	TVA/ANS Safety Class (2)	Code (3)	QA Required (4)	Location (5)	Rad Source (6)	Seismic (7)
Exhaust System	T	(11)	AMCA	X	DB	-	I
Battery Hood Exhaust System	T	(11)	AMCA	X	DB	-	I
Elec Board Room Exhaust System Fans	T	(11)	AMCA	X	DB	-	I
Main Steam System							
Relief Valves	T	B	III-2	X	AB	-	I
Safety Valves	T	B	III-2	X	AB	-	I
MSIVs	T	B	III-2	X	AB	-	I
Isolation Bypass Valves	T	B	III-2	X	AB	-	I
Feedwater System							
MFIVs	T	B	III-2	X	AB	-	I
Auxiliary Feedwater System							
Auxiliary Feedwater Pumps							
Motor Driven	T	C	III-3	X	AB	-	I
Steam Turbine Drive	T	C	III-3	X	AB	-	I
Steam Dump Systems							
Turbine Bypass	W	-	-	-	TB	-	-
Spent Fuel Pit							
Spent Fuel Pit Heat Exch.							
(Tube)	W	C	III-3	X	AB	X	I

Table 3.2-2 Summary of Criteria - Mechanical System Components (Continued)
(Page 12 of 17)

Component	Scope (1)	TVA/ANS Safety Class (2)	Code (3)	QA Required (4)	Location (5)	Rad Source (6)	Seismic (7)
(Shell)	W	C	III-3	X	AB	X	I
Spent Fuel Pit Pump	W	C	III-3	X	AB	X	I
Spent Fuel Pit Filter	W	G	VIII	X	AB	X	I(L)
Spent Fuel Pit Demineralizer	W	G	VIII	X	AB	X	I(L)
Spent Fuel Pit Strainer	W	G	-	X	AB	X	I(L)
Spent Fuel Pit Skimmer Pump	W	G	-	X	AB	X	I(L)
Spent Fuel Pit Skimmer Strainer Assembly	W	G	-	X	AB	X	I(L)
Spent Fuel Pit Skimmer Filter	W	G	VIII	X	AB	X	I(L)
Purification Pumps	T	G	ANSI B31.1	X	AB	X	I(L)
Purification Filters	T	G	ANSI B31.1	X	AB	X	I(L)
Fuel Handling System							
Refueling Machine	W	-	-	X	C	-	I(L)
Reactor Vessel Head Lifting Device	W	-	-	X	C	-	-
Reactor Internals Lifting Device	W	-	-	X	C	-	-
Spent Fuel Pit Bridge & Hoist	W	-	-	X	AB	-	I(L)
Rod Cluster Cont. Handling Fixture	W	-	-	X	-	-	-
Reactor Vessel Stud Tensioner	W	-	-	X	-	-	-
Spent Fuel Handling Tool	W	-	-	X	-	-	-

Table 3.2-2 Summary of Criteria - Mechanical System Components (Continued)
(Page 13 of 17)

Component	Scope (1)	TVA/ANS Safety Class (2)	Code (3)	QA Required (4)	Location (5)	Rad Source (6)	Seismic (7)
Fuel Transfer System							
Fuel Transfer Tube & Flange	W	B	-	X	C,AB	P	I
Conveyor System & Controls	W	-	-	X	C,AB	P	-
New Fuel Storage Racks	W	-	-	X	AB	-	I
Spent Fuel Storage Racks	T	-	-	X	AB	X	I
Emergency Diesel Fuel Oil System To 7 Day Tanks							
Transfer Pumps	T	G	B31.1	X	DB	-	I(L)
Fuel Oil Tanks (7 Day)	T	I	VIII	X	DB	-	I
Raw Cooling Water System							
Pumps	T	-	-	-	O	-	-
Strainers	T	-	-	-	TB	-	-
Sampling System							
Sample Heat Exchanger	T	-	VIII	-	AB	X	-
Sample Vessel	T	-	VIII	-	AB	X	-
Delay Coil	T	B	III-2	X	C	X	I
Equipment Decontamination System							
Pump	W	-	-	-	AB	-	-
Tank	T	-	D100	-	AB	-	-

Table 3.2-2 Summary of Criteria - Mechanical System Components (Continued)
(Page 14 of 17)

Component	Scope (1)	TVA/ANS Safety Class (2)	Code (3)	QA Required (4)	Location (5)	Rad Source (6)	Seismic (7)
Filters							
Reactor Coolant	W	B	III-2	X	AB	X	I
Seal Water Return	W	B	III-2	X	AB	X	I
Seal Water Injection	W	B	III-2	X	AB	X	I
Boric Acid	W	C	III-3	X	AB	-	I
Miscellaneous							
Letdown Orifices	W	B	III-2	X	C	X	I
Boric Acid Blender	W	C	III-3	X	AB	-	I
Boron Recovery System (See Note 24)							
Pumps							
Holdup Tank Recirc.	W	D	P&V-III	X	AB	X	I
Gas Stripper Feed	W	D	P&V-III	X	AB	X	I
Monitor Tank	W	G	VIII	X	AB	P	I(L)
Tanks							
Holdup	T	D	III-3	X	AB	X	I
Monitor	T	G	VIII	X	AB	P	I(L)

Table 3.2-2 Summary of Criteria - Mechanical System Components (Continued)
(Page 15 of 17)

Component	Scope (1)	TVA/ANS Safety Class (2)	Code (3)	QA Required (4)	Location (5)	Rad Source (6)	Seismic (7)
Demineralizers							
Evaporator Feed Ion Exch	W	G	VIII	X	AB	X	I(L)
Evaporator Condensate	W	G	VIII	X	AB	X	I(L)
Filters							
Evaporator Feed Ion Exch	W	G	VIII	X	AB	X	I(L)
Evaporator Condensate	W	G	VIII	X	AB	X	I(L)
Concentrates	W	G	VIII	X	AB	X	I(L)
Miscellaneous							
Gas Stripper & Boric Acid Evap. Pkg.	W	(16)	(16)	X	AB	X	I(L)
Emergency Gas Treatment System							
Fans	T	(11)	AMCA	X	AB	P	I
Filters	T	(11)	-	X	AB	P	I
Moisture Separator	T	(11)	-	X	AB	P	I
Dampers	T	(11)	-	X	AB,C	P	I
Ducting	T	(11)	-	X	AB,C	P	I
Auxiliary Bldg. Gas Treatment System							
Fans	T	(11)	AMCA	X	AB	P	I
Filters	T	(11)	-	X	AB	P	I
Moisture Separator	T	(11)	-	X	AB	P	I

Table 3.2-2 Summary of Criteria - Mechanical System Components (Continued)
(Page 16 of 17)

Component	Scope (1)	TVA/ANS Safety Class (2)	Code (3)	QA Required (4)	Location (5)	Rad Source (6)	Seismic (7)
Dampers	T	(11)	-	X	AB,C	P	I
Ducting	T	(11)	-	X	AB,C	P	I
Essential Raw Cooling Water System Pumps	T	C	III-3	X	P	-	I
ERCW Pump Motor Bearing							
Cooling Coils	T	(18)	-	X	P	-	I
Containment Isolation Valves	T	B	III-2	X	C	-	I
Valves	T	C	III-3	X	AB	-	I
Valves (yard)	T	C	III-3	X	B	-	I
Valves (Station Air Compressor)	T	H	B31.1	-	TB	-	---
Valves (Auxiliary Air Compressor)	T	C	III-3	X	AB	-	I
Valves (Screen Wash Supply)	T	(15)	B31.1	X	P	-	I(L)(15)
Screen Wash Pumps	T	(15)	B58.1	X	P	-	I(15)
Automatic Backwashing Strainers	T	C	III-3	X	P	-	I
Valves (Discharge Header Air Release & Piping)	T	K	C512/B31.1	X	AB	---	I(L)
Flood Mode Boration Makeup System							
Aux. Boration Makeup Tank	T	C	III-3	X	AB	X	I
Aux. Charging Booster Pumps	T	H	B31.1	X	AB	X	I
Flood Mode Boration Demineralizer	T	H	B31.1	X	AB	X	IL)

Table 3.2-2 Summary of Criteria - Mechanical System Components (Continued)
(Page 17 of 17)

Component	Scope (1)	TVA/ANS Safety Class (2)	Code (3)	QA Required (4)	Location (5)	Rad Source (6)	Seismic (7)
Flood Mode Boration Filters	T	H	B31.1	X	AB	X	I(L)
Aux. Charging Pump	T	H	B31.1	X	AB	X	I(L)
Valves	T	H	B31.1	X	AB	X	I(L)
Valves	T	B	III-2	X	AB	X	I
Valves	T	C	III-3	X	AB	X	I

Notes:

(1) T = Tennessee Valley Authority

W = Westinghouse

(2) A = TVA Safety Class A

B = TVA Safety Class B

C = TVA Safety Class C

D = TVA Safety Class D

G = TVA Safety Class G

H = TVA Safety Class H

1, 2a, 2b, or 3 = ANS N18.2 Safety Class

I = Seismic Category I, part of structure

K = TVA Safety Class K

P = TVA Safety Class P

(3) The code class listed for an item is the minimum required. An item may have been obtained to a higher code level than that listed.

III = ASME Boiler and Pressure Vessel Code - Section III

III-1 = ASME Boiler and Pressure Vessel Code - Section III, Class 1

III-2 = ASME Boiler and Pressure Vessel Code - Section III, Class 2

III-3 = ASME Boiler and Pressure Vessel Code - Section III, Class 3

IIIa9 = ASME Boiler and Pressure Vessel Code - Section III, Article 9 "Protection Against Overpressure"

VIII = ASME Boiler and Pressure Vessel Code - Section VIII

P&V-I = ASME Code for Pumps and Valves for Nuclear Power, Class I

P&V-II = ASME Code for Pumps and Valves for Nuclear Power, Class II

P&V-III = ASME Code for Pumps and Valves for Nuclear Power, Class III

D100 = American Waterworks Association, Standard for Steel Tanks, Standpipes, Reservoirs, and Elevated Tanks for Water Storage, AWWA, D100

B31.1 = ANSI B31.1 1973 Edition through summer 1973 Addenda

ACI = American Concrete Institute

AMCA = Air Moving and Conditioning Association

ARI = Air Conditioning and Refrigeration Institute

HIS = Hydraulic Institute Standards

IEEE = Institute of Electrical and Electronics Engineers

NFPA = National Fire Protection Association

B58.1 = ANSI B58.1 Vertical Turbine Pumps

B73.1 = ANSI B73.1M Horizontal end Suction Centrifugal Pumps

UL/FM = Underwriters Laboratory or Factory Mutual

SMACNA = Sheet Metal and Air Conditioning Contractors National Association

C512 = American Waterworks Association, Air-Release, Air/Vacuum, and Combination Air Valves for Waterworks Services ANSI/AWWA, C512.

(4) Quality assurance required:

X = Yes, - = No

(5) C=Containment

AB =Auxiliary Building

AEB = Additional Equipment Bldg.

CB = Control Building

DB = Diesel Generator Building

SB = Service Building

CDWEB = Condensate Demineralizer

Waste Evaporator Building

O = Outdoors above ground

B = Buried in ground

P = ERCW Pumping Station

TB = Turbine Building

(6) X = Source of radiation

- = No source of radiation

P = Possible source of radiation

(7) I = Seismically qualified

I(L)= Limited seismic qualification

- = Not seismically qualified

(8) AMCA Class III and performance tested in accordance with AMCA Standard air moving devices.

(9) Performance test required.

(10) Deleted by FSAR Amendment 79

(11) Those components of the heating, ventilating, and air conditioning system (HVAC), which are not covered directly by the TVA piping classifications of Subsection 3.2.2, have been designed and constructed to standards and specifications which are equivalent to ANS Safety Class 2b.

(12) The lower compartment coolers are Seismic Category I except for the cooling coils which are Seismic Category I(L). The upper compartment, CRDM and instrument room coolers are Seismic Category I(L). None of the Reactor Building ventilation coolers are qualified to maintain ERCW pressure boundary integrity.

(13) Vessel was built to the requirements of ASME code but does not have code stamp.

(14) Acceptable for use within Regulatory Guide 1.26 Quality Group C system (ASME Section III, Class 3.) For the auxiliary air system, see also Note 1 of Table 3.2-2a.

(15) Although the screen wash pumps, piping and valves are required for plant safety, they were not purchased to TVA Class C standards. The pumps are seismically qualified, have limited QA, and were the best commercially available product for the service. The piping and valves are designed to TVA Class G and Seismic Category I(L) for pressure boundary integrity. For this application, this level of

qualification meets the intent of TVA Class C. Criteria requires that any future modifications or repair to the ERCW screen wash pumps, piping or valves are made to the requirements of TVA Class C.

(16) This component is actually a system containing many components. Those parts of the system that contain component cooling water are Safety Class C with design code of ASME III, Class 3. The remainder of the system is Safety Class G with design codes as identified in Table 3.2-5.

(17) The secondary chamber of the steam generators (shell side) are built to the ASME B&PV Code Section III, Division 1, Class 1, and applicable code interpretations and/or rulings. Although the shell side of the steam generator functions only dictate a TVA Class B, they were procured to comply with ASME Section III, Class 1. Therefore, repairs, modifications and/or additions shall be in accordance with the original contract specifications and drawing requirements.

(18) The ERCW pump motor bearing cooling coils, required for plant safety, were not purchased to TVA Class C standards. The vendor-supplied cooling coils have been seismically qualified and are considered safety-related and suitable for the intended service. For their application, the level of qualification meets the intent of TVA Class C at the motor interface.

(19) Although not purchased and stamped in accordance with ASME Section III Code Requirements, this equipment meets the highest available commercial quality standards.

(20) All purge air ductwork (supply and exhaust) inside the annulus and exhaust air ductwork from the Shield Building isolation valves 2-FCV-30-61 and -62 to 2–FCV-30-213 and -216 is Seismic Category I. Supply air ductwork from the ABSCE isolation valves 2-FCV-30-294 and -295 to the Shield Building isolation valves 2-FCV-30-2 and -5 and all purge air ductwork (supply and exhaust) inside primary containment up to the inboard containment isolation valves is Seismic Category I(L).

(21) All piping between the containment isolation valves is Seismic Category I. The piping up to the containment isolation valves on each side is Seismic Category I(L).

(22) This tank was procured to ASME III - 3 requirements.

(23) Not used for Unit 2 operation.

(24) The boron recycle (recovery) system is not required for the operation of Unit 2. See FSAR Section 9.3.7. The portions of this system which are used for the operation of Unit 2 are discussed in FSAR Section 9.3.4.

(25) The Primary Water Storage Tank (PWST) meets the ASME Section III, Class 3, design by analysis requirements with Seismic Class I(L) Forcing Functions for atmosphere tanks.

(26) The Unit 2 PWST was initially procured to ASME Section III-3 requirements and was subsequently downgraded to API-650. However, the Unit 2 PWST bottom plate and associated nozzles are Seismic Category I and were procured to the requirements of ANSI N45.2 (Safety Related). The remainder of the Unit 2 PWST is classified as Seismic Category IL(B).

Table 3.2-2a Classification of Systems Having Major Design Concerns Related to a Primary Safety Function (Page 1 of 9)

System	System Subsection	Safety Class ANS, N-18.2	TVA Class	Seismic Category
Auxiliary Control Air	Portions of the System necessary for containment isolation. (See Note 5)	2a	B	I
	Balance of system. (See Note 1 and Note 5). System boundary is considered to exist to the upstream side of the filters which tie the non-essential control air systems to the auxiliary control air lines.	2b	C	I
Boron Recycle (See Note 12)	Equipment used to provide a ready supply of concentrated boric acid (boric acid tanks, boric acid transfer pumps, boric acid filters, and associated pipes and valves).	2b	C (See Note 11)	I (See Note 11)
	Processing and Waste Holdup Equipment whose failure could result in a site boundary dose of 0.5 rem or more. (See Note 8) (gas stripper feed pumps, holdup tanks and holdup tank recirculation pumps, and associated piping and valves).	3	D	I
	Other equipment which carries minimal or no radioactive wastes and/or has no safety function to perform (monitor tank and pumps, evaporator condensate demineralizers, batching tank, gas stripper and boric acid evaporator packages, evaporator feed ion exchangers, condensate filters, concentrate filters, evaporator feed ion exchange filters, and associated pipes and valving).	-	G	I(L)

Table 3.2-2a Classification of Systems Having Major Design Concerns Related to a Primary Safety Function (Page 2 of 9)

System	System Subsection	Safety Class ANS, N-18.2	TVA Class	Seismic Category
Chemical and Volume Control	Equipment that circulates reactor coolant normally or during an accident (charging, letdown, excess letdown, seal water return lines; centrifugal charging pumps; volume control tank; and, miscellaneous associated lines and valves). (See Note 8)	2a	B	I
	Equipment necessary for boric acid addition (boric acid tanks, boric acid blender, lines and valves).	2b	C (See Note 11)	I (See Note 11)
	Equipment associated with radwaste cleanup whose failure could result in a 0.5 rem offsite dose (Mixed bed and cation demineralizers, associated piping and valves).	3	D	I
	Balance of equipment (resin fill and chemical mixing tanks, piping and valves).	-	G	I(L)
Component Cooling	Portions of the system necessary for containment isolation.	2a	B	I
	Major pressure boundary components.	2b	C	I
	Equipment inside the CDWE Building. (See Note 13)	-	H	-
	Sample heat exchangers, drains, and vents.	-	G or L	I(L)
Containment Spray	Major pressure boundary components.	2a	B	I

Table 3.2-2a Classification of Systems Having Major Design Concerns Related to a Primary Safety Function (Page 3 of 9)

System	System Subsection	Safety Class ANS, N-18.2	TVA Class	Seismic Category
Essential Raw Cooling Water	Portions of the system piping necessary for containment isolation.	2a	B	I
	Portions of the system piping required for plant safety. (See Notes 4, 10).	2b	C	I
	Portions of the system piping not required for plant safety, but in Seismic Category I structures.		G	I(L)
	Portions of the system piping not required for safety and/or not in Seismic Category I structures.	-	H	-
	Auxiliary control air compressors (see Note 1).	-	C	I
	HVAC equipment required for plant safety (see Note 2).	-	-	I
	HVAC equipment not required for plant safety (see Note 3)	-	-	I(L)
	Portions of the strainer backwash/backflush piping (see Note 6).	-	G	I(L)
Feedwater	Downstream of and including the anchors in the valve room exterior walls.	2a	B	I
	Flow transmitter sensing lines	-	P	-
	Upstream of the anchors.	-	H	-
Feedwater, Auxiliary	Downstream of and including the first anchor which is immediately up-stream of the check valve closest to and outside of containment.	2a	B	I
	Portions of the system not in SC-2a but required after a seismic event.	2b	C	I
	Condensate supply and other piping not required after a seismic event but in Seismic Category I structures.	-	G	I(L)

Table 3.2-2a Classification of Systems Having Major Design Concerns Related to a Primary Safety Function (Page 4 of 9)

System	System Subsection	Safety Class ANS, N-18.2	TVA Class	Seismic Category
	Balance of system.	-	H	-
Fire Protection High Pressure (HPFP)	Piping necessary to provide water to AFW system in the event of a flood above plant grade. Equipment necessary to provide makeup to the primary and spent fuel cooling systems in the event of a flood above plant grade.	2b	C	I
	Balance of equipment within Seismic Category I structures.	-	G	I(L)
	Remainder	-	H	-
Flood Mode Boration and Makeup (Auxiliary Charging)	Portion of the system necessary for containment isolation.	2a	B	I
	Piping essential for makeup and boration in the event of a flood above plant grade.	2b	C	I
	Balance of system.		H	I(L)
Fuel Oil	Equipment necessary to assure continuous, full power operation of the emergency diesel-generator sets for seven days following a loss of offsite power.	2b	C	I
	Balance of equipment in Seismic Category I structures which performs no safety function but needs to maintain pressure boundary.	-	G or H	I(L)
	Remainder	-	H	-

Table 3.2-2a Classification of Systems Having Major Design Concerns Related to a Primary Safety Function (Page 5 of 9)

System	System Subsection	Safety Class ANS, N-18.2	TVA Class	Seismic Category
Fuel Pool Cleaning and Cooling	Portions of the system required for containment isolation.	2a	B	I
	Portions of the system required to cool the spent fuel (heat exchangers, pumps, associated piping and valves).	2b	C	I
	Makeup water loop from the RWST through RWP pumps to isolation valve downstream of pumps SFP skimmer piping.	-	G (See Note 7)	I(L)
	Line from isolation valve downstream of RWP pumps to the SFPC loop	2b	C	I
	Balance of system.		G	I(L)
Heating, Ventilation, and Air Con-ditioning (HVAC)	System containment isolation valves and piping between valves.	2a	B	I
	HVAC components, ductwork, and piping located in the Reactor, Auxiliary, Control, and Diesel Generator Buildings that perform safety related air cooling and heating operations or essential air filtration and purification processes or that supply life supporting air (see Note 2).	2b	M,Q, or S	I
	Balance of system (see Note 3).	-	M,Q,S,U,V	I(L)
Hydrogen Analyzer	Portion of H_2 Analyzer system which supplies pure O_2 as reagent gas to H_2 Analyzer Panels and Vacuum Trap Assemblies located on sample tubing low points for H_2 Analyzer System. (see Note 9). (Unit 1 only)	-	-	I

Table 3.2-2a Classification of Systems Having Major Design Concerns Related to a Primary Safety Function (Page 6 of 9)

System	System Subsection	Safety Class ANS, N-18.2	TVA Class	Seismic Category
Ice Condenser	Portions of the system required to function during a DBA.	2b	C	I
	Portions of the system that provide a containment isolation function	2a	B	I
	System refrigeration piping	-	N	I(L)
	System refrigeration piping in Reactor Building.	-	M	I(L)
	Balance of system not classified as refrigeration piping (i.e. drains).	-	G or H	I(L)
Main Steam	Upstream of, and including the flued-head anchors in the valve room exterior walls.	2a	B	I
	Turbine impulse pressure transmitter sensing lines	-	P	-
	Downstream of the flued-head anchors.	-	H	-
Reactor Coolant	Equipment within the reactor coolant system boundary, failure of which could cause a Condition III or IV loss-of-coolant accident. (Components downstream of a 3/8 inch or smaller orifice are excluded).	1	A	I
	Portions of the system protected from reactor coolant pressure by a 3/8 inch or smaller orifice, reactor vent head ventilation system, and branch piping for the pressurizer steam space instrumentation nozzles (0.83 inch inside diameter, or smaller).	2a	B	I
	Portions of the system that provide a containment isolation function.	2a	B	I
	Safety and relief valve discharge piping.	-	G	I(L)
	Equipment that does not provide a safety function (pressurizer relief tank (PRT), primary water supply inside containment, nitrogen supply and vent headers to the PRT).	-	G	I(L)

Table 3.2-2a Classification of Systems Having Major Design Concerns Related to a Primary Safety Function (Page 7 of 9)

System	System Subsection	Safety Class ANS, N-18.2	TVA Class	Seismic Category
Residual Heat Removal (RHR)	Major pressure boundary components.	2a	B	I
Safety Injection (SI)	Balance of system that recirculates reactor coolant after an accident or prevents leakage of reactor coolant to points external to the system. (See Note 8).	2a	B	I
	Refueling water storage tank and SIS accumulators.	2a	B	I
	Piping from the SIS accumulators to the accumulator isolation valves, and from the RWST to SC-2a valves in the safety injection, RHR, charging pump, and containment spray pump suction lines.	2a	B	I
	Piping to CVCS holdup tanks.	2b	C	I
	Accumulators N_2 fill line.	-	G	I(L)
Steam Generator Blowdown	Piping and valves from the steam generators to and including the containment isolation valves	2a	B	I
	Piping and valves down stream of the containment isolation valves to Column U	-	G	I(L)
	Piping and valves down stream of Column U.	-	H	-
Waste Disposal	Portions of system that provide a containment isolation function.	2a	B	I
	Equipment whose failure could cause a site boundary dose of 0.5 rem or more (per RG 1.26). (See Note 8).	3	D	I
	Balance of system in Seismic Category I structures for which a component failure may cause damage to safety-related equipment.	-	G	I(L)
	Equipment not within Seismic Category I structures.	-	H	-

Table 3.2-2a Classification of Systems Having Major Design Concerns Related to a Primary Safety Function (Page 8 of 9)

System	System Subsection	Safety Class ANS, N-18.2	TVA Class	Seismic Category
Note 1:	Although not purchased and stamped in accordance with ASME Code Section III requirements, the auxiliary control air system compressors and dryers meet the highest commercial quality standards.			
Note 2:	Although not purchased under ASME Section III requirements, the HVAC equipment is required for plant safety and does meet the highest commercial quality standards. Safety Class 2b round flexible and triangular duct board ducting installed as part of the ceiling air delivery system in the main control room above the suspended ceiling is qualified to limited seismic requirements, analyzed to ensure that the ducting will remain in place, the physical configuration will be maintained such that flow will not be impeded, and the ducting pressure boundary will not be lost, and the ducting is constructed of standard commercial grade materials.			
Note 3:	Although not purchased under ASME Section III requirements, this HVAC equipment (except for the Reactor Building coolers) maintains the pressure boundary integrity of the ERCW system. Inside containment, the lower compartment coolers are Seismic Category I except for the cooling coils which are Seismic Category I(L). The upper compartment coolers, CRDM and instrument room coolers are Seismic Category I(L).			
Note 4:	Although the screen wash pumps, piping and valves are required for plant safety, they were not purchased to TVA Class C standards. The pumps are seismically qualified, have limited QA, and were the best commercially available product for the service. The piping and valves are designed to TVA Class G and Seismic Category I(L) for pressure boundary integrity. For this application, this level of qualification meets the intent of TVA Class C. Criteria requires that any future modifications or repair to the ERCW screen wash pumps, piping or valves are made to the requirements of TVA Class C. NRC Bulletin 83-06 "Nonconforming Materials Supplied By Tube-Line Corporation" has been evaluated for this system; Carbon Steel and Stainless Steel Program Plans were developed, presented to the NRC, verbally approved, initiated, completed, and reported to the NRC in the NRC Bulletin 83-06 report. The NRC Bulletin 83-06 and NCR GENMEB 8301 were closed and approved by the NRC Inspection Reports 50-390/84-03 and 50-391/84-03. The fittings that were installed and found to be acceptable are identified in Tables 3.1-6 and 3.1-7 of WB-DC-40-36 (Reference DIM WB-DC-40-36-18). The potential effect of unacceptable indications in radiographs of Tube-Line fittings welded with filler material has also been evaluated. The radiographs were supplied by Tube-Line as required by the material specification (ASME SA-403). Piping stress analysis was reviewed for Condition Adverse to Quality Report WBP890546. The review showed that stresses in the fittings are within ASME Section III allowable stresses even if the worst radiographic indications for each size fitting were to be transposed to the highest-stressed fitting. Authorization to use an alternative to the testing requirements of Section III Subsection ND-2000 of the ASME Code was provided by the NRC through a SER dated September 23, 1991.			
Note 5	Portions of the control air system were not pneumatic tested to the correct pressure. NRC Inspection Report Nos. 50-390/90-04 and 50-391/90-04 has approved an alternate acceptance to pneumatic test criterion.			
Note 6	The strainer backwash/backflush piping has been upgraded from Class G to Class G Seismic Category I(L) for pressure boundary integrity.			

Table 3.2-2a Classification of Systems Having Major Design Concerns Related to a Primary Safety Function (Page 9 of 9)

System	System Subsection	Safety Class ANS, N-18.2	TVA Class	Seismic Category
Note 7	Class G piping labeled with PBQA is analyzed for Seismic Category I(L) pressure boundary retention and is within the scope of the hydrostatic QA program (the valve seat terminates the PBQA boundary). All remaining Class G piping is seismically supported for position retention only.			
Note 8	Manual block valves exist in the discharge piping of the relief valves which provide overpressure protection for the volume control tank, the boron injection tank, and the waste gas compressors. ASME Code, Section III, Subsection NC/ND, Paragraph 7153 prohibits the placement of a block valve in the discharge of pressure relief devices unless the block valve is installed with positive controls and interlocks and means are provided such that the operation of the controls and interlocks can be verified. The following design and administrative features, evaluated and approved by NRC,[2] are an acceptable alternative to the ASME code requirements because they provide reasonable assurance that both stop valves would not be left closed during plant operation. Redundant flowpaths exist in the relief valve discharge piping, the locked-open block valves are installed in a controlled access location, and administrative procedures are in place to assure the locked-open position of the block valves.			
Note 9	Although not purchased under ASME Section III requirements, the O_2 supply bottles, related manifolds and vacuum trap assemblies are required for post-LOCA conditions and meet the highest commercial quality standards, and are qualified to WBNP Seismic Category I classification. (Unit 1 only)			
Note 10	Some welds in the buried portion of the ERCW System did not receive a Section III hydrostatic test visual examination. They did, however, receive a vacuum box examination after welding and the code required NDE. Additionally, a pressure test was performed and held for 1 hour, then a Section XI VT-2 test was performed using 1 psi/min pressure drop or a 2 gal/min loss for 10 min. This was approved by the NRC in Safety Evaluation Report, Supplement 12.			
Note 11	Although not originally purchased to ASME Section III and Seismic Category I requirements, the replacement immersion heater assemblies for boric acid tank A have been non-destructive tested and evaluated to be acceptable for the classification.			
Note 12	The boron recycle system is not required for operation of Unit 2. See FSAR Section 9.3.7. The portions of this system which are used for the operation of Unit 2 are discussed in FSAR Section 9.3.4.			
Note 13	Not used for Unit 2 operation.			

Table 3.2-2b Classification of Systems Not Having Major Design Concerns Related to a Primary Safety Function (See Note 2 below)

System Subsection	Safety Class ANS. N-18.2	TVA Class	Seismic Category
Portion of system necessary for primary containment isolation.	2a	B	I
Portion of system in Seismic Category I structures and not in a higher safety class (except refrigeration piping).	-	G, H or L (See Note 1)	I(L)
Balance of system (except refrigeration piping).	-	H, J, or L	-

Note 1: In special applications, where the code requirements for Class G are not appropriate, Class K may be used.

Note 2: All Entries Above Apply to the Following Systems:

Auxiliary Boiler	Hydrogen Cooling
Carbon Dioxide Storage, Fire Protection, and Purge	Layup Water Treatment
Chemical Cleaning	Lube Oil
Condensate	Makeup Water
Condenser Circulating Water	Potable Water
Condenser Tube Cleaning	Primary Water
Demineralized Water	Raw Cooling Water
Extraction Steam	Raw Service Water
Feedwater Treatment and Secondary Chemical Feed	Reheat Steam
Gland Seal Insulating Oil	Roof and Floor Drains
Gland Seal Water	Service Air and Non-Essential Control Air
Heater Drains and Vents	Station Drainage
	Turbine Drains and Misc. Piping, Vacuum primer.

Table 3.2-3 Electrical Power System Equipment Designed to Operate During and After a "Safe Shutdown Earthquake" (Page 1 of 4)

Equipment	Number Per Unit / Number In Plant	Qualified in Conformance (1) with IEEE 344-1971
6.9-kV Auxiliary Power System		
6.9-kV Shutdown Boards	2/4	Yes (2)
(Unit 1) 1A-A, 1B-B (Unit 2) 2A-A, 2B-B		
6.9-kV Shutdown Logic Relay Panels	2/4	Yes
(Unit 1) 1A-A, 1B-B (Unit 2) 2A-A, 2B-B		
6.9-kV/480V Shutdown Board Transformers	6/12	Yes
(2000 kVA) (Unit 1) 1A1-A, 1A-A, 1A2-A, 1B1-B, 1B-B, 1B2-B (Unit 2) 2A1-A, 2A-A, 2A2-A, 2B1-B, 2B-B, 2B2-B		
6.9-kV/480V Pressurizer Heater Backup Group Transformers (500 kVA)	2/4	Yes (3)
(Unit 1) 1A-A, 1B-B (Unit 2) 2A-A, 2B-B		
480V Auxiliary Power System		
480V Shutdown Boards	4/8	Yes
(Unit 1) 1A1-A, 1A2-A, 1B1-B, 1B2-B (Unit 2) 2A1-A, 2A2-A, 2B1-B, 2B2-B		
480V Reactor MOV Boards	4/8	Yes
(Unit 1) 1A1-A, 1A2-A,		
1B1-B, 1B2-B		
(Unit 2) 2A1-A, 2A2-A,		
2B1-B, 2B2-B		
480V Reactor Vent Boards	2/4	Yes
(Unit 1) 1A-A, 1B-B (Unit 2) 2A-A, 2B-B		
480V Control and Auxiliary		

Table 3.2-3 Electrical Power System Equipment Designed to Operate During and After a "Safe Shutdown Earthquake" (Page 2 of 4)

Equipment	Number Per Unit / Number In Plant	Qualified in Conformance (1) with IEEE 344-1971
Bldg. Vent Boards	4/8	Yes
(Unit 1) 1A1-A, 1B1-B,		
1A2-A, 1B2-B		
(Unit 2) 2A1-A, 2B1-B,		
2A2-A, 2B2-B		
480V Diesel Auxiliary Boards	4/8	Yes
(Unit 1) 1A1-A, 1B1-B, 1A2-A, 1B2-B (Unit 2) 2A1-A, 2B1-B, 2A2-A, 2B2-B		
480V Distribution Panelboards for Pressurizer Heater Backup Groups	2/4	Yes
(Unit 1) 1A-A, 1B-B (Unit 2) 2A-A, 2B-B		
480V Transfer Switch for Component Cooling System Pump C-S	-/1	Yes
120V AC Vital Plant Control Power System		
Static Inverter System Components	4/12	Yes
a. Auctioneer unit b. A transformer rectifier power supply c. A single phase static inverter with associated equipment for control, voltage, regulation, filtering, and instrumentation d. Regulated transformer bypass source with static and manual bypass switches		
(Unit 1) 1-I, 1-II, 1-III, 1-IV		
(Unit 2) 2-I, 2-II, 2-III, 2-IV		
(Spare) 0-I, 0-II, 0-III, 0-IV		

Table 3.2-3 Electrical Power System Equipment Designed to Operate During and After a "Safe Shutdown Earthquake" (Page 3 of 4)

Equipment	Number Per Unit / Number In Plant	Qualified in Conformance (1) with IEEE 344-1971
120V AC Vital Instrument Power Boards	4/8	Yes
(Unit 1) 1-I, 1-II, 1-III, 1-IV		
(Unit 2) 2-I, 2-II, 2-III, 2-IV		
125V DC Vital Plant Control Power System		
480V AC Vital Transfer Switches	-/4 Note (4)	Yes
Transfer SW I, II, III, IV		
125V DC Vital Battery Chargers	-/9 Note (4)	Yes
Chgrs I, II, III, IV, V		
Chgr 6-S, 7-S, 8-S, and 9-S		
Transfer Devices for Spare 125V DC		
Vital Battery Chargers	-/8 Note (4)	Yes
DC Transfer Switch 68DC1-S & 68DC2-S DC Transfer Switch 79DC1-S & 79DC2-S AC Transfer Switch 68AC1-S & 68AC2-S AC Transfer Switch 79AC1-S & 79AC2-S		
480V AC Vital Disconnect Panels Panel I, II, III, IV	-/4 Note (4)	Yes
125V DC Vital Batteries	-/4 Note (4)	
Batteries I & II Batteries III & IV		
125V DC Vital Battery Boards	-/4 Note (4)	Yes
I, II,		
III, IV		
Electrical Penetrations		
High Voltage Power Penetrations	4/8	Yes
Nuclear Instrument System Penetrations	4/8	Yes
Control Rod Position Indication Penetrations	1/2	Yes
Low Voltage, Power, Control, and Indication Penetrations	41/82	Yes
Thermocouple Penetrations	2/4	Yes
Onsite Electrical Power Source Components		

Table 3.2-3 Electrical Power System Equipment Designed to Operate During and After a "Safe Shutdown Earthquake" (Page 4 of 4)

Equipment	Number Per Unit / Number In Plant	Qualified in Conformance (1) with IEEE 344-1971
Diesel Generator Protective Relay Panels	2/4	Yes
(Unit 1) 1A, 1B (Unit 2) 2A, 2B		
Diesel Control Panels	2/4	Yes
125V Diesel Generator Batteries and Battery Racks	2/4	Yes
DC Distribution Panels	2/4	Yes
125V DC Battery Chargers	2/4	Yes
Standby Diesel Generators	2/4	Yes
(Unit 1) 1A-A, 1B-B (Unit 2) 2A-A, 2B-B		

1. Those equipment items procured prior to publication of IEEE 344-1971 were purchased under specifications which TVA believes conform to the intent of that document. Equipment procurement, modification, and evaluation activities after September 1, 1974 applied the IEEE 344-1975 standard for seismic qualification.
2. The 6.9-kV shutdown boards are qualified under Section 3.2.2.4.3 of IEEE 344-1971. The test unit withstood higher accelerations than shown on the frequency response spectrum for resonance at 1 percent damping.
3. The 500-kVA transformers were shown analytically to have lower stress under seismic loading conditions than the 2000-kVA transformers which were tested. The 500-kVA transformers are similar in design and construction to the 2000-kVA transformers.
4. The 125-V DC Vital Control Power System is not unitized therefore, numbers shown are on a per plant basis.

Table 3.2-4 Summary of Codes and Standards for Safety Class Components of The Watts Bar Nuclear Plant Code Requirements

Safety Class ANS N-18.2	TVA Class	Seismic Category	Code Classification Piping, Pumps, Valves, and Vessels	Remarks
1	A	I	ASME Code, Sec. III, Class 1	Note 1
2a	B	I	ASME Code, Sec. III, Class 2	Note 1
2b	C	I	ASME Code, Sec. III, Class 3	Notes 1,2,3
3	D	I	ASME Code, III, Class 3	Notes 1 & 3

NOTE:1) Equipment designated "Vendor-Supplied Safety-Related Equipment Packages" on the drawing meet the following requirements:

a. The vendor-supplied equipment packages (component and piping) contained within TVA piping systems classified as A, B, C, or D which do not meet the requirements of ASME Section III are installed and documented using the rules of ASME Section III, and manufacturer's instruction manuals, as requirements, except that the materials and equipment are not certified to Section III, and N-5 data report is not required. 10 CFR 50 Appendix B applies. In some cases there may be portions of these packages which are not safety-related (i.e., drains and vents past the first normally closed isolation valve) and do not require installation to these requirements.

b. Any substitute material used or repairs performed by construction shall be in accordance with the original contract specification and drawing requirements.

c. TVA Class D components are those whose postulated failure would result in potential offsite doses that exceed 0.5 Rem to the whole body, or its equivalent. Class D components do not perform a primary safety function.

d. Exception is taken to Note 1.a above for the auxiliary systems supplied on the diesel generator skid. The fuel oil, engine cooling water (except the ASME Section III, Class 3 heat exchangers), starting air and lubricating oil systems are designed per ANSI B31.1. They are designed to Seismic Category I and are within the 10CFR50 Appendix B QA program. Criteria requires that any modifications to this piping are performed to meet the intent of ASME Section III Class 3 (TVA Class C).

Table 3.2-4 Summary of Codes and Standards for Safety Class Components of The Watts Bar Nuclear Plant Code Requirements

Safety Class ANS N-18.2	TVA Class	Seismic Category	Code Classification Piping, Pumps, Valves, and Vessels	Remarks
2)	ANSI B31.1 code is an acceptable substitute for the ASME code for installation of piping and valves on Class C instrument lines attached to TVA Class M, Q, and S systems. 10 CFR 50 Appendix B applies.			
3)	Condition Adverse to Quality Report WBP 900336SCA and NRC Violation 390/90-15-02 identified lack of penetration and/or lack of fusion in ASME Code Section III, Class 3 butt welds made prior to September 26, 1990.			

Table 3.2-5 Non-Nuclear Safety Classifications

TVA Class	Seismic Category	Code Classification Piping	Pumps	Valves	Vessels
G	I(L)	ANSI B31.1	Manufac-turers Standards	ANSI B31.1 B16.5, or MSS-SP-66	ASME Code, Sec. VIII, Div. 1 Note 3
H	Note 1	ANSI B31.1	*	ANSI B31.1, B16.5, or MSS-SP-66	*
J	N/A	*	*	*	*
K	I(L)	*	*	*	*
L	Note 1	*	*	*	*
P	Note 2	*	*	*	*

*Code used is determined by the design requirements of the equipments

Note 1: Those portions of TVA Class H and L systems located inside Seismic Category I structures are Seismic Category I(L). The balance of these systems are not designed for seismic loading.

Note 2: This class applies to specific sensing lines which meet ASME Code Section III, Class 3 requirements except that inertia effects need not be used for design of lines in non seismic areas and independent verification by an Authorized Nuclear Inspector is not required for fabrication and installation. 10 CFR 50 Appendix B applies. N-5 data report is not required. Portions of sensing lines in Seismic Category I structures meet Seismic Category I(L) pressure boundary requirements.

Note 3: The Unit 2 Primary Water Storage Tank (PWST) shall be classified as API-650 in lieu of ASME Code Section VIII, Div. 1. The Unit 2 tank bottom plate and nozzles shall be qualified to Seismic Category I requirements and shall meet the requirements of 10 CFR 50, Appendix B; i.e., the Unit 2 PWST bottom plate and associated nozzles were procured to the requirements of ASTM N45.2 (Safety Related). The connecting tank piping located within the ABSCE shall be qualified to Seismic Category 1L(A) (pressure boundary & position retention) requirements. The remainder of the tank and piping shall be qualified to Seismic Category 1L(B) (position retention) requirements.

Table 3.2-6 TVA Heating, Ventilation, and Air Conditioning Classifications (Page 1 of 2)

TVA Class	ANS Safety Class	Code Jurisdiction	Seismic Category
M	2b*	ANSI B31.5	I or I(L)
N	None	ANSI B31.5	Note 1
Q	2b*	Round Duct, Steel, Spiral or Longitudinal Seam, Locked Seam or Welded (ASTM A211) and SMACNA High Velocity Duct Construction Standards, 2nd Edition, 1969. Criteria requires that future duct constructions after December 21, 1990, are performed in accordance with Specifications G-95, N3M-914, N3C-942 and Design Criteria WB-DC-40-31.8 (see Note 3). ANSI/ASME N509 (see Note 2).	I or I(L)
S	2b*	Rect. Duct, Steel, Locked Seam or Welded, SMACNA High Velocity Duct Construction Standards, 2nd Edition, 1969. Criteria requires that future duct constructions after December 21, 1990, are performed in accordance with Specifications G-95, N3M-914, N3C-942 and Design Criteria WB-DC-40-31.8 (see Note 3). ANSI/ASME N509 (see Note 2).	I or (L) Note 4
U	None	Round Duct, Steel, SMACNA Low Velocity Duct Construction Standards, 4th Edition, 1969. Criteria requires that future duct constructions after December 21, 1990, are performed in accordance with Specifications G-95, N3M-914, N3C-942 and Design Criteria WB-DC-40-31.8 (see Note 3).	I(L)
V	None	Rect. Duct, Steel, SMACNA Low Velocity Duct Construction Standards, 4th Edition, 1969. Criteria requires that future duct constructions after December 21, 1990, are performed in accordance with Specifications G-95, N3M-914, N3C-942 and Design Criteria WB-DC-40-31.8 (see Note 3).	I(L)

*TVA Class M, Q, and S designations are also used on heating, ventilation, and air-conditioning systems which have no ANS safety class requirements if seismic requirements are invoked.

Table 3.2-6 TVA Heating, Ventilation, and Air Conditioning Classifications (Page 2 of 2)

TVA Class	ANS Safety Class	Code Jurisdiction	Seismic Category
Note 1:	Those portions of TVA Class N systems located inside Seismic Category I structures are Seismic Category I(L). The balance of these systems are not designed for seismic loading.		
Note 2:	Those portions of TVA Classes Q and S Category I duct which are of welded construction, that are fabricated or repaired after January 12, 1987, meet the welding requirements of ANSI/ASME N509 1976. The workmanship samples are not required to have Penetrant Testing (PT) or Magnetic Testing (MT).		
Note 3:	All duct installations prior to December 21, 1990, were evaluated and qualified to meet the requirements of WB-DC-40-31.8.		
	All duct installations after December 21, 1990, shall be in accordance with specifications G-95, N3M-914, N3C-942, and Design Criteria WB-DC-40-31.8.		
Note 4	Safety Class 2b round flexible and triangular duct board ducting installed as part of this ceiling air delivery system in the main control room above the suspended ceiling is qualified to Seismic I(L) requirements, analyzed to ensue that the ducting will remain in place, the physical configuration will be maintained such that flow will not be impeded, the ducting pressure boundary will not be lost, and is constructed of standard commercial grade materials.		

Table 3.2-7 Code Cases and Provisions of Later Code Editions and Addenda Used By TVA for Design and Fabrication (Page 1 of 16)

Source Document	New Source	Provisions of Later Code	Related Requirements and Regulatory Guide Requirements	Examples When Used
I. CODE CASES				
A. DESIGN/MATERIAL RELATED				
N/A	N-192	Provides rules for use of flexible metal hose	Regulatory Guide 1.84, Rev 26 imposes the following addition to the requirements of Code Case N-192: The applicant should indicate system application, design and operating pressure/temperature rating of the flexible hose. Data to demonstrate compliance of the flexible hose with NC/ND–3649 particularly NC/ND-3649.4(e), are required to be furnished with the application.	Referenced in data report for some of the flexible metal hose assemblies.
N-224-1	N/A	Provides rules for the use of ASTM A-500 Grade B and ASTM A-501 as integrally welded attachments.		
N/A	N-304	Provides for use of other materials not listed in the appendices.	None	Code Case N-304 was originally approved by the NRC in Regulatory Guide 1.84, Rev. 20 dated November 1982. Subsequent revisions of the Code Case have continued to retain unrestricted approval.
NX-2000	N-188-1	Provides rules for using alloy 625 or 825 tubing that is welded without filler metal.	None	Materials to be used for flexible metal hose assemblies
N/A	N-514	Provides alternate analysis for pressure/temperature curves and low temperature overpressure protection (LTOP) system.	None	Pressure and Temperature Limits Report (PTLR)

Table 3.2-7 Code Cases and Provisions of Later Code Editions and Addenda Used By TVA for Design and Fabrication (Page 2 of 16)

Source Document	New Source	Provisions of Later Code	Related Requirements and Regulatory Guide Requirements	Examples When Used
B. FABRICATION/EXAMINATION/TESTING RELATED				
N-32-4	NA	Provides for alternative testing of inaccessible or embedded welded joints in piping.	Regulatory Guide 1.84, Rev. 26, accepts Code Case N-32-4 based on the following clarification and interpretation. Code Case N-32-4 does not replace paragraph NC/ND–6129, "Provisions For Embedded Or Inaccessible Welded Joints In Piping," of the Code. The intent of the Code Case is to provide additional testing above code requirements and permit liquid penetrant or magnetic particle testing in place of radiographic testing for Class 3 piping with 3/8 inch nominal wall or less. Paragraph 1 contains an additional requirement to the Code. It was, therefore, acceptable but unnecessary to include in the Code Case. Paragraph 2 is a variation in the volumetric examination technique and was acceptable as written. Paragraph 3 contains an additional requirement and is not a relaxation of the Code. It was, therefore, acceptable but unnecessary to include in the Code Case.	Used in G-29 Process Specification 3.M.9.1
N-127	NA	Provides for an alternative examination requirement for Class 1 and 2 welds made by an automatic welding process.	None	Used on the 47B333 drawings.
N-237-2	NA	Permits acceptance of open ended Class 2 or 3 piping within Class 2 or 3 vessels or tanks or into the gaseous atmosphere of Class MC vessels without hydrostatic testing	None	Used in G-29 Process Specification 3.M.9.1. Also invoked by NC/ND-6000.

Table 3.2-7 Code Cases and Provisions of Later Code Editions and Addenda Used By TVA for Design and Fabrication (Page 3 of 16)

Source Document	New Source	Provisions of Later Code	Related Requirements and Regulatory Guide Requirements	Examples When Used
N-240	NA	Permits acceptance of open ended piping without hydrostatic testing.	None	Used in G-29 Process Specification 3.M.9.1. Also invoked by NC/ND-6000.
N-241	NA	Safety and safety relief valve piping submerged in a suppression pool inside a Class MC or CC vessel may be exempted from hydrostatic testing.	None	Used in G-29 Process Specification 3.M.9.1. Also invoked by NC/ND-6000.
N-292	NA	Provides rules for addition of weld metal at weld end prep to meet dimensional and minimum wall considerations.	Regulatory Guide 1.84, Rev. 26 imposes the following requirement in addition to the requirements in Code Case N-292: Class 3 piping that is longitudinally welded and that has a weld efficiency factor of 1.0 as selected from Table ND-3613.4-1 should receive a 100% volumetric examination (RT or UT) of the deposited weld metal in accordance with the requirements of ND-5000.	Used to disposition NCR W-4-P.
N-316	NA	Provides for socket weld sizes <1.09 T_{NOM}.	None	Used to disposition NCRs 3702R R0, W-427-P R0, 3555R R0, 4135R R0, 4345R R1, 4739-0, 2217R, 4114, 5305-0, and 5833 R0.
N/A	N-341	Provides for a five year period of certification of Level III NDE personnel.	None	
C. QUALITY ASSURANCE RELATED				
N-272	NA	Allows information to be cross referenced or depicted on an attached drawing rather than physically attached to the data report.		
N-282	NA	Provides alternatives when Code data plates are removed.	None	Used in disposition of NCRs 1464R R1 and 3750.

Table 3.2-7 Code Cases and Provisions of Later Code Editions and Addenda Used By TVA for Design and Fabrication (Page 4 of 16)

Source Document	New Source	Provisions of Later Code	Related Requirements and Regulatory Guide Requirements	Examples When Used
II. CODE EDITION AND ADDENDA				
A. DESIGN/MATERIAL RELATED				
Sect II SA-36	74S76	Bend testing made an optional (supplemental) requirement	None	See Interpretation III-1-83-275. Used in G-62.
Sect II SA-515	74W74	Bend testing made an optional (supplemental) requirement	None	See Interpretation III-1-83-275. Used in G-62.
Sect II SA-516	74W74	Bend testing made an optional (supplemental) requirement	None	See Interpretation III-1-83-275. Used in G-62.
Sect II SA-283	74S76	Bend testing made an optional (supplemental) requirement	None	See Interpretation III-1-83-275. Used in G-62.
Sect II SA-479	74S76	Decreased the required elongation to 30% and reduction in area to 40%.	None	Used in G-62.
NCA-1140(e)	80W81	Permits the use of material certified to editions and addenda earlier than the Code of Record providing certain requirements are met.	None	Used in G-62
NE-4430	77W78	Deletes the minimum size of attachment pads	None	Used in disposition of NCR 3723R
ND-4435	74ED	Provides for certain minor permanent attachments to be made of uncertified material	None	Used to disposition NCR 5409 R1
NA	80S81	Deleted the paragraph limiting instrument take off size	None	Used to disposition NCR 2001R. Also involved in change number NC/ND3676-1
NE-3213.10	74ED	Provides for acceptance of locally over-stressed conditions	None	Used to disposition NCR 3250 R1

Table 3.2-7 Code Cases and Provisions of Later Code Editions and Addenda Used By TVA for Design and Fabrication (Page 5 of 16)

Source Document	New Source	Provisions of Later Code	Related Requirements and Regulatory Guide Requirements	Examples When Used
NC/ND-3612.4A	74W76	Provides for use of intervening isolation valves	None	
NA	80S81	Deletes requirements formerly in paragraph NC/ND-3676 affecting lagging of steam instrument lines.	None	This request has been generated to cover situations in which it is not possible to state with certainty that some provisions of later Codes have or have not been used at WBN.
NC/ND-3643.1	77S77	Adds provisions for making branch connections by means of complete penetration pipe to pipe welds.	None	This request has been generated to cover situations in which it is not possible to state with certainty that some provisions of later Codes have or have not been used at WBN.
NC/ND-2311	74W76	Lists materials exempted from impact testing. This provision exists in Section NB 2311 Summer 1972 Addenda which is referenced in Section NC/ND.	None	Requirements of later Code exempting certain materials from impact test for Class 2 and Class 3 systems.

Table 3.2-7 Code Cases and Provisions of Later Code Editions and Addenda Used By TVA for Design and Fabrication (Page 6 of 16)

Source Document	New Source	Provisions of Later Code	Related Requirements and Regulatory Guide Requirements	Examples When Used
ASME III, Appendix XVII, 2461.1	80ED	Bolting material allowable stress of non-pressure retention parts (i.e., motor actuator mounting screws).	None	For the analysis of non-pressure retention parts of 1-FCV-72-13 and -34 for Sect. increased valve closure thrust loops. SQN calc. SCG-4M-00786 was reviewed for WBN application. Since the 1971 ASME III NC Codes do not contain stress allowables for non-pressure retention parts, thus ASME III NC and Appendix XVII of 1980 Codes, Sect. 2461.1 rules will be used for the analysis. Ref. DCN-S-33722-A and MEB Calc. EPM-CDM-071092 and -071192.
B. FABRICATION/EXAMINATION/TESTING RELATED				
NX-4436	80W81	Permits limited welding of attachments to a piping system after it has been hydrostatically tested providing certain conditions are met.	None	Used in G-29 Process Specification 3.M.9.1.
NC-6129	77W78	Provides for alternative testing of inaccessible or embedded welding joints in piping.	None	Used in G-29 Process Specification 3.M.9.1.

Table 3.2-7 Code Cases and Provisions of Later Code Editions and Addenda Used By TVA for Design and Fabrication (Page 7 of 16)

Source Document	New Source	Provisions of Later Code	Related Requirements and Regulatory Guide Requirements	Examples When Used
NB-6128	77S78	Piping systems which serve as spray systems shall be hydrostatically tested to the rules of this section, except that the test may be performed with the spray nozzle attachment connections plugged. The spray nozzles and any connection beyond the run connections need not be hydrostatically tested.	None	Used in G-29 Process Specification 3.M.9.1. Also invoked by NC/ND-6000.
NX-6211	80S80	Air pockets in components or systems shall be minimized during the conduct of the hydrostatic test by providing vents at high points, or by flushing the system or by providing calculations to show that the entrapped air is dissolved at the pressure/temperature conditions existing during the test.	None	Used in G-29 Process Specification 3.M.9.1. Also invoked by NC/ND-6000.
NB-4622.1-1 (TBL)	74ED	PWHT holding time is specified to be: For T less than or equal to 1/2 inch, 30 minutes; For T greater than 1/2 inch but less than or equal to 2 inches (P number 1 & 3), 1 hour per inch; For T greater than 2 inches (P number 1 & 3), 2 hours plus 15 minutes per inch over 2 inches; For T greater than 1/2 inch but less than or equal to 5 inches (P number 4,5,6,7,11,11A), 1 hour per inch; For T greater than 5 inches (P number 4,5,6,7), 5 hours plus 15 minutes per inch over 5 inches. For T greater than 5-inches (P Number 11, 11A) one hour per inch.	None	Used in G-29 Process Specification 2.M.1.1.

Table 3.2-7 Code Cases and Provisions of Later Code Editions and Addenda Used By TVA for Design and Fabrication (Page 8 of 16)

Source Document	New Source	Provisions of Later Code	Related Requirements and Regulatory Guide Requirements	Examples When Used
NB-4623	74ED	For PWHT above 800°F, the rate of heating & cooling shall not exceed a rate of 400° per hour divided by the maximum thickness in inches of the material being heat treated but in no case more than 400°F per hour.	None	Used in G-29 Process Specification 2.M.1.1.
NB-4624.3	74ED	For PWHT, the minimum width of controlled band at each side of the weld on the face of the greatest weld width shall be the thickness of the weld or 2 inches whichever is less. (2.M.1.1 uses the minimum from 71S73 and the maximum from 74).	None	Used in G-29 Process specification 2.M.1.1. G-29 uses 2 times the thickness or 2 inches whichever is less. This is more conservative than the Code requires.
NC-4623	74ED	For PWHT above 800°F, the rate of heating & cooling shall not exceed a rate of 400° per hour divided by the maximum thickness in inches of the material being heat treated but in no case more than 400°F per hour.	None	Used in G-29 Process Specification 2.M.1.1.
NA	74ED	Deleted requirement of Code of Record Paragraph 4623.1 that furnace temperature be less than 400°F when the component is placed in it for PWHT.	None	Used in G-29 Process Specification 2.M.1.1.
NX-4453.1	83S83	Relative to examination of defect removal area (adds the following) this examination is not required where defect removal removes the full thickness of the weld and where the backside of the weld is not accessible for removal of examination materials.	None	Used in G-29 Process Specification 1.M.1.2.

Table 3.2-7 Code Cases and Provisions of Later Code Editions and Addenda Used By TVA for Design and Fabrication (Page 9 of 16)

Source Document	New Source	Provisions of Later Code	Related Requirements and Regulatory Guide Requirements	Examples When Used
ND-4231.2	74ED	Deletes Code of Record requirements for MT/PT examination of temporary attachment removal sites on Class 3 components. Permits temporary attachments but deletes the NDE examinations of removal areas.	None	Used in G-29 Process Specification 1.M.1.2.
NC/ND-6322	80S81	(By reference to NC/ND-6222) If the minimum test pressure of NC/ND-6221(a) or (d) is exceeded by 6% at any location, the upper limit shall be established by analysis using all loadings that may exist during the test.	NC/ND-6221(a) NC/ND-6221(d)	Used in G-29 Process Specification 3.M.12.1
NX-5110	74ED	(By reference to Section V T-732.2(B) which refers to T-733.2) Direct or rectified current shall be used at 700/N to 900/N amperes per inch OD up to 5 inches and 500/N to 700/N amperes per inch OD from 5 to 10 inches and 300/N to 500/N amperes per inch OD over 10 inches where N = # of turns.	T-733.2	Used in G-29 Process Specification 3.M.2.1.
NB-5110	74ED	(By reference to Section V T-733.2.) Direct or rectified current shall be used at 700 to 900 amperes per inch OD up to 5 inches and 500 to 700 amperes per inch OD from 5 to 10 inches and 300 to 500 amperes per inch OD over 10 inches.	None	Used in G-29 Process Specification 3.M.2.1.
NX-4427-1 (FIG)	80S80 80W81 Errata	Minimum size for socket weld fitting fillet weld (CX) = 1.09 T nominal.	None	Used in G-29 Process Specification 3.M.5.1.

Table 3.2-7 Code Cases and Provisions of Later Code Editions and Addenda Used By TVA for Design and Fabrication (Page 10 of 16)

Source Document	New Source	Provisions of Later Code	Related Requirements and Regulatory Guide Requirements	Examples When Used
NX-5110	74S75	(By Reference to Section V T-732.2) For encircling coils, direct or rectified current at 35,000 ampere-turns divided by the sum of 2 plus the L/D ratio of the test part shall be used for magnetization.	T-732.2(A) T-732.2(B)	Used in G-29 Process Specification 3.M.2.1.
NX-5110	74ED	(By reference to Section V T-731.3) Direct or rectified magnetizing current shall be used at a minimum of 100 and a maximum of 125 amperes per inch of prod spacing for sections greater than or equal to 3/4 inch. For sections less than 3/4 inch, amperage shall be 90-110 ampere per inch of prod spacing.	None	Used in G-29 Process Specification 3.M.2.1.
NX-5112	74ED	All NDE performed under this section shall be executed in accordance with detailed written procedures which have been proven by actual demonstration to the satisfaction of the inspector.	None	Used in G-29 Process Specification 3.M.2.1.
NX-5110	74W74	(By reference to Section V T-630(B)) The penetrant materials are acceptable if the residue does not exceed 0.005 grams or the total sulfur or halogen content shall not exceed 1% of the residue by weight.	None	Used in G-29 Process Specification 3.M.1.1.
NX-5110	74ED	(By reference to Section V T-662) A groove may be machined across the center of each face approximately 1/16 inch deep and 3/64 inch wide, or some other means should be provided to permit side by side comparison without interfering cross contamination between sides.	None	Used in G-29 Process Specification 3.M.1.1.

Table 3.2-7 Code Cases and Provisions of Later Code Editions and Addenda Used By TVA for Design and Fabrication (Page 11 of 16)

Source Document	New Source	Provisions of Later Code	Related Requirements and Regulatory Guide Requirements	Examples When Used
NX-5110	77W79	(By reference to Section V T-660) Permits qualification to be performed by the entire block at each temperature, photographing the results and comparing the photographs.	None	Used in G-29 Process Specification 3.M.1.1.
NX-5112	74ED	All non-destructive examinations shall be executed in accordance with detailed written procedures which have been proven by actual demonstration to the satisfaction of the inspector.	None	Used in G-29 Process Specification 3.M.1.1.
NX-5112	74ED	All non-destructive examinations shall be executed in accordance with detailed written procedures which have been proven by actual demonstration to the satisfaction of the inspector.	None	Used in G-29 Process Specification 3.M.7.1.
Section IX, QW-203	74ED	Allows welding procedure qualification in any position to qualify for all position production welds except as noted.	QW-405.2 which requires qualification in the vertical position with upward progression if fracture toughness (impact testing) is a requirement.	Used in G-29 Process Specification 1.M.1.2.
NC/ND-2578	74ED	Unacceptable surface defects may be removed by grinding or machining provided: The remaining thickness is not reduced below the minimum required; the depression after defect elimination, is blended uniformly.	None	Used in G-29 Process Specification 4.M.5.1.

Table 3.2-7 Code Cases and Provisions of Later Code Editions and Addenda Used By TVA for Design and Fabrication (Page 12 of 16)

Source Document	New Source	Provisions of Later Code	Related Requirements and Regulatory Guide Requirements	Examples When Used
ND-4130	74W76	Radiography is not required for welded repairs in material used in components provided that the welds joining these materials are not required to be radiographed, the extent of the welded repair does not exceed 10 square inches of surface area and the magnetic particle or liquid penetrant examination of the repair is made as required by ND-2539.4.	None	Used in G-29 Process Specification 4.M.5.1.
NB-4131 NC-4130	74W74	The time of examination of the weld repairs to weld edge preparations shall be in accordance with NB-5130. (NC-5130).	Since NB/NC-5130d did not exist in summer 1973, these two paragraphs from winter 1974 must be added.	Used in G-29 Process Specification 4.M.5.1.
NX-5110	74ED	(By reference to Section VT-535.1) The primary reference shall be equalized at 50% full screen height.	None	Used in G-29 Process Specification 3.M.7.1.
NB-4620 NB-4651	74ED	Ferritic alloy steel pipe that has been heated for bending shall receive a heat treatment in accordance with NB-4620. Exemptions are listed in Table NB-4622.3-1.	None	Used in G-29 Process Specification 4.M.2.1.
Sect V T-263.3	83W83	Provides for not using shims if the radiographic density requirements can be met.	None	Used in G-29 Process Specification 3.M.3.1.
NX-5112	74ED	All nondestructive examinations shall be executed in accordance with detailed written procedures which have been proven by actual demonstration to the satisfaction of the inspector.	None	Used in G-29 Process Specification 3.M.3.1.

Table 3.2-7 Code Cases and Provisions of Later Code Editions and Addenda Used By TVA for Design and Fabrication (Page 13 of 16)

Source Document	New Source	Provisions of Later Code	Related Requirements and Regulatory Guide Requirements	Examples When Used
NC/ND-3641.1(a)	71W73	Revise the definition of certain terms in Equation 3 and 4 to permit other means than pipe wall thickness to provide for mechanical strength.		Used in the following Calculations and NCRs: B26850423089, B26850508012, B26850710009, B26850710010, B26850808014, B26860611003, MEB850228009, WBP850211062, NCR4145RRO, NCR2217R. Also involved in Code changes NC-3641(A)-1-3, NC-3641(A)-1-4, NC-3641(A)-1-5, ND-3641(A)-1-3, ND-3641(A)-1-4, and ND-3641(A)-1-6.
NX-4311.3	80W81	Provides for use of capacitor discharge welding of thermocouples and strain gauges.	None	Used in G-29 Process Specification 1.M.4.3.
NC-4244(e)	74ED	Provides alternative for attachment of internally threaded bosses.	None	Used in Calculation B26850613072.
ND-5321	77W77	(By reference to Appendix VI, VI-1132) Provides minimum size for relevant RT indications.	None	Used to disposition CAQR WBP890600.
NX-5342	77ED	Defines nonrelevant condition as any indication with a major dimension of less than 1/16 of an inch. (MT examination).	None	

Table 3.2-7 Code Cases and Provisions of Later Code Editions and Addenda Used By TVA for Design and Fabrication (Page 14 of 16)

Source Document	New Source	Provisions of Later Code	Related Requirements and Regulatory Guide Requirements	Examples When Used
NB-4622.7	74ED	Provides for exemptions to otherwise mandatory post weld heat treatment based on P number, size, carbon content, and preheat.	None	Also invoked by NC/ND-4000.
TBL NX-4622.1-1	74S76	Provides for substitution of 200°F preheat for PWHT when carbon >0.30% and/or tensile strength >70 ksi for certain material applications.	None	Used in disposition of NCR 1146R and in the 47B333 drawings.
NX-4622.3-1 (TBL)	74ED	Provides additional exemptions to PWHT under conditions as described in Table.	New Paragraph NX-4622.3 - defines term "nominal thickness" as used in Table NX-4622.3-1.	Used on the 47B333 Drawings.
NB-5320 & NC-5320	77W77	(By reference to Appendix IV) Provides relevant size and spacing clarification for rounded indications for RT.	None	Provides acceptance criteria for rounded indications for RT
NB-5250 and NC-5261	77W78	Exempts welds of non-structural attachments from liquid penetrant or magnetic particle examination. Does not exempt the removal area of non-structural or temporary attachments.	None	WBPER910208
NB/NC/ND 6114.2	80S81	Provides exemption to requirement to re-hydro following repair by welding if repair weld is not required to be radiographed per NB/NC/ND-4453.4.	None	Used in G-29 process specification 3.M.9.1
NB 2510(a)	83S83	Seamless pipe, tube, and fittings 1"NPS and less need not be examined by the rules of this subarticle.	None	Use of examination requirements for ASME Section III, Class 1, 1" nominal pipe and smaller from a later edition. Invoke for 1" NPS and less, only.

Table 3.2-7 Code Cases and Provisions of Later Code Editions and Addenda Used By TVA for Design and Fabrication (Page 15 of 16)

Source Document	New Source	Provisions of Later Code	Related Requirements and Regulatory Guide Requirements	Examples When Used
Table NC-4622.3-1	74S76	Exempts PWHT in PI materials less than 1 1/2" thick provided 200 degrees F preheat is used.	None	Used to disposition WBP 900419PER
NX-4427	80W82	Allows fillet welds to be undersize 1/16 inch for 10% of length of weld.	None	Weld Project
NCA 1273	80S80	Exempts orifice plates not exceeding 1/2" nominal thickness which are clamped between flanges and used for flow measuring service only from the code.	None	Orifice Plates
NB 2538(a)4	77ED	Areas ground to remove oxide scale or other mechanically caused depressions...need not be PT or MT examined.	None	Provisions for not NDE examining impressions caused by mechanical means.
NB-4622.9	89ED	Increases the area which can be repaired by temper bead to 100 in^2 and up to 1/3 of base material thickness.	None	Steam generator manway repair or other locations as required.
C. QUALITY ASSURANCE RELATED				
NCA-4000	80W81	Provided more detailed QA program requirements.	None	Used in the NCM
NCA-8240	83S83	Provides alternatives when code data plates are removed.	None	Used in disposition of WBP880052, NCR 5577R0, NCR 5611R0, and NCR 5619R0.
NCA-8240(b)	80S81	Provides alternatives when code data plates are removed.	None	Use in disposition of NCR 3951R.

Table 3.2-7 Code Cases and Provisions of Later Code Editions and Addenda Used By TVA for Design and Fabrication (Page 16 of 16)

Source Document	New Source	Provisions of Later Code	Related Requirements and Regulatory Guide Requirements	Examples When Used
NX-2610b and c	77ED	Makes provision to exempt manufacturers of small products from certain QA program requirements.	None	Used in Disposition NCR GENMEB8402, NCR 5146-0, WBP880431, WBP889432, WBP880433, WBP880437, and WBP880438.
NCA 3800	89ED	Metallic material manufacturers and material suppliers Quality System program provides for non certificate holders QA Manual revision and date to be placed on the documentation and also provides documentation requirements for 1" bar stock.	None	QA programmatic requirements for vendors supplying materials and components.
N-520-3	NA	Under the provisions Watts Bar Unit 2 will complete documentation and Code Data report and Stamping for those portions of the plant which are suitable for use	None	Provide documentation to the N-Certificate Holder having overall responsibility to support WBN2 Completion.

THIS PAGE INTENTIONALLY BLANK

3.3 Wind and Tornado Loading

3.3.1 Wind Loadings

3.3.1.1 Design Wind Velocity

The Seismic Category I structures are designed for a 95-mile per hour wind, 30 feet above grade, with a 100 year recurrence interval. The wind was determined from Figure 1, ASCE paper 3269, "Wind Forces on Structures."[3] ANSI A58.1-1972, 'Building Code Requirements for Minimum Design Loads in Building and Other Structures'[4] is an acceptable alternative for determining design wind velocities and forces. The wind was applied for the full height of the structure. A gust factor of 1.1 is included for all wind loads and combinations of loads where wind is involved as recommended in ASCE paper 3269.[3]

3.3.1.2 Determination of Applied Force

The pressure and pressure distribution of wind loads on structures were determined by the methods described in ASCE Paper 3269.[3] The dynamic wind pressure, q, is defined as $q = 0.00256V^2$, where q is in psf and V is in mph. A gust factor of 1.1 is applied which redefines q as $q = 0.00256\ (1.1V)^2 = 0.00310V^2$. The wind pressure, p, in psf, is defined as p = Cq, where C is the pressure distribution coefficient (Cpe or Cpi) or the shape coefficient (C_D) determined from Table 4 in ASCE Paper 3269.[3]

For the analysis of box-shaped structures, a shape coefficient (C_D) of 1.3 is used which defines the wind pressure as p = 1.3q. Of the total pressure (p = 1.3q), 0.8q is applied to the windward wall, and 0.5q is applied to the leeward wall. Concurrently the end walls receive 0.7q negative pressure and the roof receives 0.5q uplift.

For the analysis of cylindrical structures, such as the Shield Buildings and storage tanks, the shape coefficients and pressure distribution coefficients are obtained from Table 4(f) of ASCE Paper 3269.[3]

3.3.2 Tornado Loadings

3.3.2.1 Applicable Design Parameters

All Category I structures except for the additional Diesel Generator Building are designed for a "funnel" of wind moving with a translational velocity of 60 miles per hour and having a rotational velocity of 300 miles per hour. Category I structures are also designed for an external depressurization of 3 psi occurring in 3 seconds.

The tornado loading for the Additional Diesel Generator Building and structures initiated after July 1979 is discussed in Section 2.3.1.

Information about the spectrum and pertinent characteristics of tornado-generated missiles is in Section 3.5.1.4.

3.3.2.2 Determination of Forces on Structures

The pressures and pressure distribution of wind forces on Category I structures due to tornado wind loadings were determined by following the recommendations of ASCE Paper 3269, 'Wind Forces on Structures'.[3] ANSI A.58.1-1972, 'Building Code Requirements for Minimum Design Loads in Building and Other Structures'[4] is used to provide an alternate method to determine tornado wind loads. The provisions for gust factors and variations of wind velocity with height are not applied. The dynamic wind pressure, q, is defined as $q = 0.00256V^2$, where q is in psf and V is in mph. The wind pressure, p, in psf, is defined as p = Cq, where C is the shape coefficient (C_D).

A 1.3 shape coefficient is included for box-shaped structures with vertical walls normal to the wind direction. The dynamic pressure load, p = 1.3q, due to tornadoes is applied to the structure walls and roof in the same manner as the wind loads in Section 3.3.1.

Cylindrical structures and tanks have the same shape coefficients applied as for wind loads in Section 3.3.1. The pressures are applied over the structures as shown in Table 4(f) of ASCE Paper 3269.[3]

The loadings of the wind force and the depressurization are considered to act concurrently. Coincident wind velocities and pressure drops for the design tornado are shown in Figure 3.3-1. The relationship between wind velocity and pressure in the design tornado shown in Figure 3.3-1 was developed based on Hoecker's studies of the Dallas tornado of 1957.[1,2]

Venting, when used as a design procedure for reducing the tornado-generated differential pressure, is accomplished by using blowoff panels that fail at a lower differential pressure. Upon relief of the differential pressure by the blowoff panel from the exterior wall of a room, the interior walls and slabs of these rooms are designed for the 3 psi pressure differential.

The effective loads on Category I structures due to tornado-generated missiles were determined using the procedures described in Section 3.5.3.

The effect of various combinations of tornado loadings were studied with respect to each Category I structure. The most adverse combination was selected individually for the design basis of each structure.

The tornado loadings are not considered to be coincident with accident or earthquake loadings.

Venting is utilized to reduce the effective tornado-generated differential pressure in portions of the Auxiliary Building. Four hundred square feet of relief panel area are provided in the roof over the spent fuel pool room and cask loading room at Elevation 814.75 for venting purposes during the tornado. The relief panels are held in place by gravity. An upward pressure of 0.25 psi is sufficient to offset the weight of the panels and cause them to be lifted from their nominal positions. Two corners of each panel are chained to the roof to prevent the panel from becoming a missile after it relieves.

The shutdown board room and, in general, the area between columns q and u at Elevation 757.0 is not part of that portion of the Auxiliary Building vented by design; however, the remainder of the building is considered to depressurize due to the vent area provided by the air intake openings and through ventilation penetrations. In addition, the Diesel Generator Building and the Intake Pumping Station are designed to depressurize due to the vent areas provided by the ventilation openings in those buildings.

The roof and exterior walls of the spent fuel pool room and cask loading area were evaluated for the effective tornado-generated pressure differential and were found to be within allowable stress limits. Air velocity induced by venting is expected to be high at the vent opening, but decrease rapidly within a few feet of the opening. No hazard to equipment is foreseen since the vents are located in the Auxiliary Building roof, well away from any essential equipment.

No hazard to equipment in these areas is foreseen due to the small pressure differential and low air velocities. Walls, ceilings, and floors separating areas experiencing depressurization during a tornado from areas not experiencing depressurization are designed to withstand the total tornado-generated pressure differential of 3 psi.

The analytical model employed in determining the effective differential pressures utilizes isentropic, perfect gas relations in a step-wise, steady-state first law analysis. The analysis determined pressure and temperature variations within the structure induced by the design base tornado defined in Section 3.3.2.1.

Pressure differentials and assorted air velocities are expected in all areas which depressurize due to the vented design of the building. In these areas, the partition walls have been checked for the differential pressure from depressurization. In the room(s) where the differential pressure exceeds the wall design, administrative operating instructions ensure that the doors will remain open during a tornado event to reduce the differential pressure to an acceptable value.

3.3.2.3 Ability of Category I Structures to Perform Despite Failure of Structures Not Designed for Tornado Loads

An investigation of the effect of tornado loading on the Turbine Building was made to determine the extent of failure of the structure as to collapse or to the possibility of generating missiles that could damage Category I structures and impair their ability to perform their intended design function.

The following information was determined:

(1) The metal siding panels will fail at loads considerably below the design tornado loading and will become missiles that could affect the Control Building. The siding will fail before the main girts are overloaded enough to cause failure. The failure of the parapet girts is likely, resulting in the release of 6WF15.5 in 4-foot lengths, 8C11.5 in 8-foot lengths, 18-inch x 3/8-inch plate in varying lengths, and 4ST8.5 in 7-foot lengths.

The roof of the Control Building was investigated for the above missiles and found to be adequately designed to resist the missiles.

(2) Following the failure of the siding, the structural steel framing of the building will be exposed to tornado forces acting upon the steel structure, equipment, piping, and other items of wind resistance. The resistance of the structure at this point will be sufficient to prevent collapse onto the Control Building.

(3) The turbine room cranes, if not anchored, could possibly be blown from the crane girders, either falling on the operating floor or out the end of the building onto the Control Building roof.

To preclude the occurrence of this event, the cranes will be anchored to stops at one end of the runway during tornado alerts, watches, and tornadoes.

(4) The potable water tanks and gland seal water tanks at Elevation 796.0 floor could be blown to the Control Building roof along with air intake hoods, auxiliary boiler stack, and heating and vent equipment on the Elevation 796.0 floor.

The Control Building roof was determined to be adequately designed to resist the described events.

The methods used to convert the tornado wind loadings into loads acting on the structures, as well as their distributions across the structures, were determined by following the recommendations of ASCE Paper 3269.[3]

REFERENCES

(1) Hoecker, W. H., 'Wind Speed and Air Flow Patterns in the Dallas Tornado and Some Resultant Implications', Monthly Weather Review, May 1960.

(2) Hoecker, W. H., 'Three Dimensional Pressure Pattern of the Dallas Tornado and Some Resultant Implications,' Monthly Weather Review, December 1961.

(3) ‘Wind Forces on Structures’, Final Report, Task Committee On Wind Forces, Committee on Loads and Stresses, Structural Division, Transactions, American Society of Civil Engineers, Publication Number 3269, Volume 126, Part II, (1961).

(4) ANSI A58.1-1972, "Building Code Requirements for Minimum Design Loads in Building and Other Structures," Committee A58.1, American National Standards Institute, 1972.

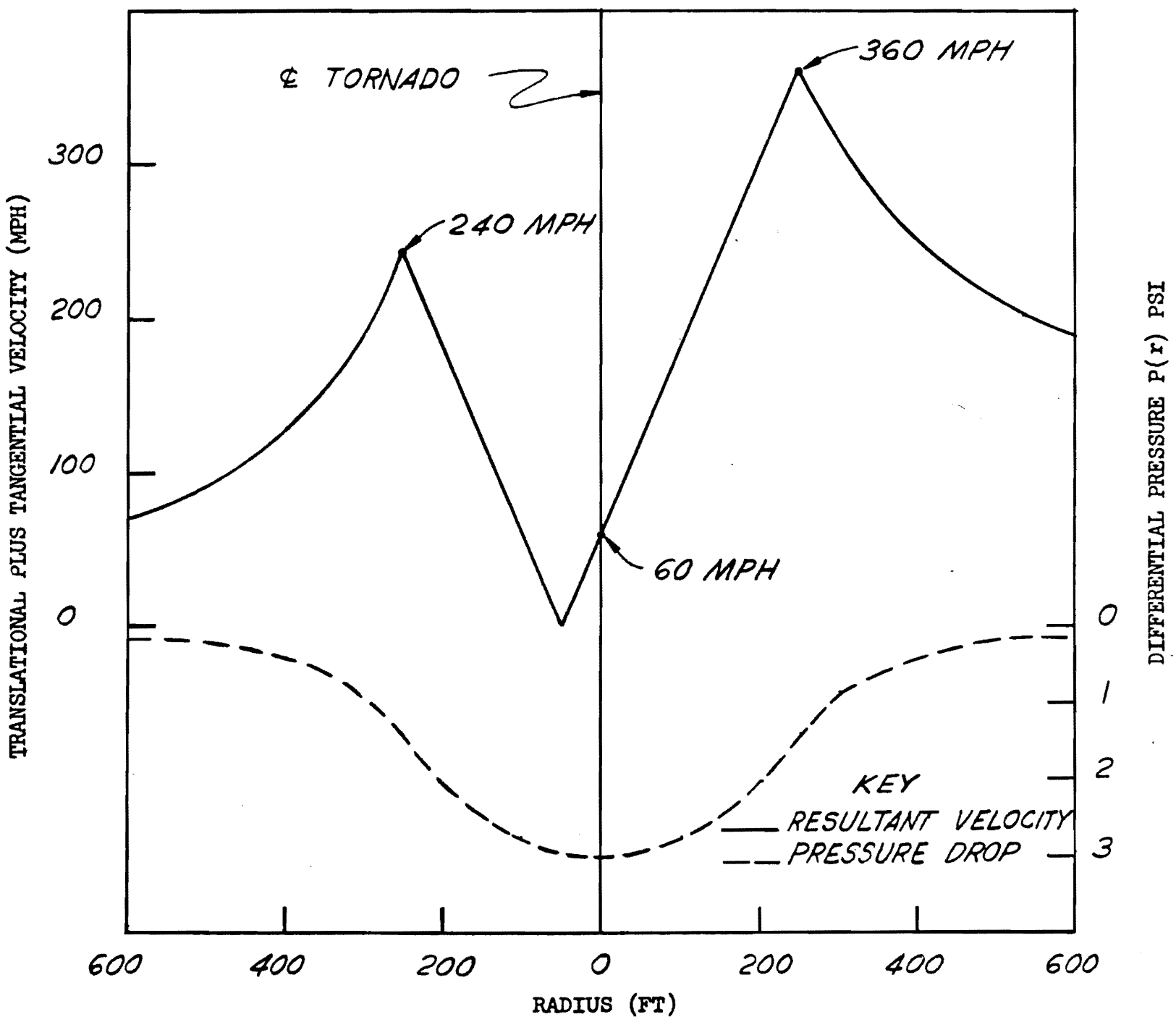

VARIATIONS OF DIFFERENTIAL PRESSURE AND TANGENTIAL PLUS TRANSLATIONAL VELOCITY AS A FUNCTION OF THE DISTANCE FROM THE CENTER OF A TORNADO

FIGURE 3.3-1

Figure 3.3-1 Variations of Differential Pressure and Tangential Plus Translational Velocity as a Function of the Distance from the Center of a Tornado

THIS PAGE INTENTIONALLY BLANK

3.4 WATER LEVEL (FLOOD) DESIGN

3.4.1 Flood Protection

The flood protection requirements and provisions for Category I structures are discussed in Sections 2.4.1.1, 2.4.2.2, 2.4.2.3, and 2.4.10.

3.4.2 Analysis Procedure

The methods and procedures by which the static and dynamic effects of the design basis flood conditions are applied to Category I structures are discussed in Sections 2.4.3.6 and 2.4.13.5.

REFERENCES

None.

THIS PAGE INTENTIONALLY BLANK

3.5 MISSILE PROTECTION

Category I structures have been analyzed and designed to be protected against a wide spectrum of credible missiles. Failure of certain rotating or pressurized components of equipment is credible and would presumably lead to generation of missiles. In addition, noncredible missiles are identified and justification is given for their not being a credible source of missiles. Tornado-generated missiles and missiles resulting from activities peculiar to the site are also discussed in this section. It is shown that the missile protection criteria to which the plant has been analyzed and protected comply with the intent of Criterion 4 of 10 CFR 50, Appendix A, General Design Criteria for Nuclear Power Plants.

A very basic premise for protection is to design components and equipment so that they will have a low potential for generation of missiles. In general, the design that results in reduction of missile generation potential promotes the long life and usability of a component, and is well within permissible limits of accepted codes and standards. The following general methods are used in the design, manufacture, and inspection of equipment:

(1) Pressurized equipment and sections of piping that from time to time may become isolated under pressure have been provided with pressure relief valves. (Relief valves are in accordance with ASME Section III or the appropriate industry standards.) These valves are present to ensure that no pressure buildup in equipment or piping sections will exceed the design limits of the materials involved.

(2) Components and equipment of the various systems have been designed and built to the standards established by the ASME or other equivalent industrial standard. A stringent quality control program has been enforced during manufacture, testing, and installation.

(3) Volumetric and ultrasonic testing where required by code, coupled with periodic inservice inspections of materials used in components and equipment, adds further assurance that any material flaws that could permit the generation of missiles will be detected.

The design bases to which the plant has been designed in order to meet the intent of the criterion are listed below.

Design Bases

(1) Protection shall be provided against potential missiles that could cause a loss-of-coolant accident (LOCA).

(2) Protection shall be provided against potential missiles that could result in the loss of ability to control the consequences of a LOCA, including both the necessity for core cooling and for retention of containment integrity.

(3) Protection shall be provided against potential missiles that could jeopardize functions necessary to bring the reactor to a safe shutdown condition during normal or abnormal conditions.

3.5.1 Missile Selection and Description

3.5.1.1 Internally Generated Missiles (Outside Containment)

The structures that are to be protected against damage from internally-generated missiles outside containment are listed in Table 3.2-1. The systems and components that are to be protected against damage from internally generated missiles outside containment include the ANS Safety Class equipment listed in Tables 3.2-2a, 3.2-2b, and 3.2-3.

A discussion of the individual structures and the systems and components inside these structures is provided below. In general, the systems and components important to safety located in the structures of Table 3.2-1 rely on redundancy and separation for protection from internal missiles generated by failure of high pressure system components. Missiles which result from pipe breaks are not considered. Missiles that are associated with overspeed failures of rotating components are considered a greater safety hazard than those generated by failure of high-pressure system components and are evaluated in more detail.

3.5.1.1.1 Shield Building

No rotating components which might generate missiles are installed between the primary containment and the Shield Building. No high-pressure system components whose failure could generate missiles are located in this area.

3.5.1.1.2 North and South Steam Valve Rooms

No rotating components are installed in these rooms. The barriers provided to limit pipe whip and jet impingement in these rooms also provide protection from any potential missiles generated by failure of any high-pressure system components. The main steam isolation valve stems and the main feedwater isolation valve stems are not postulated as credible missiles in these rooms as explained below.

Numerous features of the main steam isolation valve (MSIV) design and construction serve to prevent the valve stem from being ejected as a missile. The MSIV's are 32 inch wye, bi-directional globe valves that are air-opened, spring-closed, and qualified to ASME Section III, Class 2. Several components of the valve and operator would have to fail concurrently before the valve stem could be ejected. First, the pilot poppet is fastened onto the bottom end of the valve stem and backseated against the poppet cap. The lower segment of the valve stem has a larger diameter than the opening provided in the bonnet, the bottom spring seat, and the bottom bead of the air cylinder that the upper segment of the valve stem and the piston rod normally operate through.

The worst case failure tending to cause MSIV stem ejection would be the complete severance of the valve stem itself at the valve bonnet. This failure would eliminate the components and design features described thus far as barriers to valve stem ejection. The internal area of the stem, tending to eject it. However, the valve operator is designed to withstand the transmitted forces acting through the stem during the normal operation of the valve. These thrust forces are at least as great as those that would act on a broken stem. Thus, several additional components of the valve and operator would still have to fail before even this fractured segment of the valve stem could be ejected. First, the top of the valve stem is fastened into the bottom spring seat cap which is in turn bolted to the bottom spring seat. The air cylinder piston rod is located directly over the valve on the same axis and is inserted through the opening in the air cylinder bottom bead. The air cylinder piston and top head (each 3 inch plate) are also located over the valve stem, perpendicular to its axis. The combination of these valve and operator features precludes the MSIV stem (or a segment of it) from being postulated as a credible missile.

Similarly, various features of the main feedwater isolation valve (MFWIV) design and construction serve to prevent its valve stem from being ejected as a missile. The MFWIV's are 16 inch bolted bonnet, wedge gate valves with motor operators and are qualified to ASME Section III, Class 2. Several components of the valve and operator would have to fail concurrently before the stem could be ejected. First, the wedge gate holds the bottom end of the valve stem in a close-fitting ball-and-socket type arrangement. The lower segment of the valve stem itself is backseated against the valve bonnet. This segment has a larger diameter than the openings provided in the bonnet, the upper and lower yoke plates, and the motor operator that the upper segment of the valve stem normally operates through. The worst case failure tending to cause MFWIV stem ejection would be the severance of the stem itself above the backseat segment just described. For the same reasons as given previously for the MSIV, additional components of the MFWIV operator would still have to fail before even this fractured segment of the valve stem could be ejected. First, the upper stem segment is geared into the motor-driven worm shaft of the operator. Then, a pipe cap is bolted on top of the operator unit over the valve stem and perpendicular to its axis. This combination of valve and operator features precludes the MFWIV stem (or a segment of it) from being postulated as a credible missile.

3.5.1.1.3 Auxiliary Building

The only rotating component which was considered for overspeed condition is the auxiliary feedwater steam-driven pump. All other pumps are electrically driven and incapable of achieving an overspeed condition. The manufacturer of the steam turbine (Terry Turbine) has indicated that they have tested their solid wheel turbine under overspeed conditions and no missiles are generated. The pump itself (manufactured by Ingersoll-Rand) may develop missiles under overspeed conditions but its potential for damage is small because of the small size of any missiles postulated. The room containing the pump is oriented in such a manner as to minimize the potential for damage caused by postulated pump missiles.

Consideration of missiles associated with failure of high-pressure system components is handled by redundancy and separation of safety-related systems.

The internal walls and floors of the Auxiliary Building are constructed of reinforced concrete which limit the range of any potential internal missiles. In particular, the spent fuel pool is protected by at least one wall or floor of reinforced concrete from internal missiles generated in other parts of the Auxiliary Building.

The portions of the CVCS and SIS outside of containment are physically separated and protected by concrete barriers of sufficient strength to contain any postulated internally generated missiles.

3.5.1.1.4 Control Building

There are no credible potential internal missiles in this building. There are no rotating components which could have an overspeed failure and no high-pressure systems. The carbon dioxide fire protection system inside the Control Building is not pressurized until it is actuated.

3.5.1.1.5 ERCW Structures

At the Intake Pumping Station the essential raw cooling water (ERCW) pump motors are exposed to the atmosphere. A structural steel grillage system, discussed in Section 3.8.4, provides protection to the pumps from tornado missiles. A concrete shield wall separates the four motors of Train A from those of Train B. These components are arranged in a straight line over a distance of about 100 feet. An overspeed failure is not postulated for these pumps. Even if a failure were postulated, no credible trajectory of any resultant missile could damage enough components to reduce the number available to less than four. No credible failure of any high-pressure component could create a missile which could reduce the availability of pumps on the opposite power train.

No credible, potential internal missile sources are installed in the remainder of the ERCW structure.

3.5.1.1.6 ERCW Pipe Tunnels and RWST Foundations

No credible potential internal missile sources are installed in these structures.

3.5.1.1.7 Diesel Generator Building

Four emergency diesel generators, which are required to supply emergency power to certain engineered safety features, are each located inside a separate room in the Diesel Generator Building. Interior walls of reinforced concrete separate these generators. Additionally, a diesel generator C-S which may be substituted for any one of the normally aligned diesel generators is located within the separate Additional Diesel Generator Building.

There is a mechanical governor on the diesel engine of each diesel-generator unit which is designed to assume control of the engine when there is a tendency to

overspeed. In addition, the diesel generators have an overspeed trip which cuts off fuel to the diesel engine upon an overspeed condition. Consequently, no missiles are postulated for overspeed conditions of the generator. The diesel generator units are protected from the effects of a postulated failure of the carbon dioxide storage tank by an 18-inch thick reinforced concrete wall. Therefore, any missiles or pressure build-up generated by a rupture of the carbon dioxide storage tank would not damage essential equipment.

The vent path for the carbon dioxide storage tank compartment is through one set of standard double doors into a stairwell. If additional pressure relief is required, the vent path is through another set of standard double doors which open to the atmosphere from the stairwell.

3.5.1.2 Internally Generated Missiles (Inside Containment)

3.5.1.2.1 Missile Selection

Catastrophic failure of the reactor vessel, steam generators, pressurizer, reactor coolant pump casings, and piping leading to generation of missiles is not considered credible. Massive and rapid failure of these components is not postulated because of the material characteristics and inspections; quality control during fabrication, erection, and operation; conservative design; and prudent operation as applied to the particular component. The reactor coolant pump flywheel is not considered as a source of missiles for the reasons discussed in Section 5.2.6.

Nuclear steam supply components, which nevertheless are considered to have a potential for missile generation inside the reactor containment, are the following:

(1) Control rod drive mechanism housing plug, drive shaft, and the drive shaft and drive mechanisms latched together.

(2) Certain valves.

(3) Temperature sensor assemblies.

(4) Pressurizer instrument well and heaters.

Gross failure of a control rod mechanism housing sufficient to allow a control rod to be rapidly ejected from the core is not considered credible for the following reasons:

(1) Full length control rod drive mechanisms are shop tested at 4105 psig.

(2) The mechanism housings are individually hydro-tested to 3107 psig as they are installed on the head adapters of the reactor vessel and they are checked during the hydro-test of the completed reactor coolant system.

(3) Stress levels in the mechanism are not affected by system transients at power, or by thermal movement of the coolant loops.

(4) The mechanism housings are made of type 304 stainless steel. This material exhibits excellent notch toughness at all temperatures that will be encountered.

However, it is postulated that the top plug on the control rod drive mechanism will become loose and be forced upward by the water jet. The following sequence of events is assumed: The drive shaft and control rod cluster are forced out of the core by the differential pressure of 2500 psi across the drive shaft; the drive shaft and control rod cluster, latched together, are assumed fully inserted when the accident starts; after approximately 12 feet of travel, the rod cluster control spider hits the underside of the upper support plate; upon impact, the flexure arms in the coupling joining the drive shaft and control cluster fracture, completely freeing the drive shaft from the control rod cluster. The control cluster would be completely stopped by the upper support plate; however, the drive shaft would continue to be accelerated upward to hit the missile shield provided. This analysis is summarized in Table 3.5-1. For a description of the missile shield see Section 3.5.1.2.6.

Valve stems are considered to be extremely unlikely sources of missiles because of the design, construction qualifications, and testing of the valves. The isolation valves installed in the reactor coolant system have stems with a back seat. This effectively eliminates the possibility of ejecting valve stems even if the stem threads fail. Analysis shows that the back seat or the upset end would not penetrate the bonnet. Additional interference is encountered with air and motor operated valves.

Valves with nominal diameter larger than 2 inches have been designed against bonnet body connection failure and subsequent bonnet ejection by means of:

(1) Using the design practice of ASME Section VIII which limits the allowable stress of bolting material to less than 20% of its yield strength;

(2) Using the design practice of ASME Section VIII for flange design; and

(3) By controlling the load during the bonnet body connection stud tightening process.

The pressure containing parts are designed per code Class 1 requirements established by the ASME Section III Code.

The proper stud torquing procedures and the use of a torque wrench, with indication of the applied torque, limit the stress of the studs to the allowable limits established in the ASME Code.

This stress level is far below the material yield. The complete valves are hydrotested per the ASME Section III Code. The stainless steel bodies and bonnets are volumetrically and surface tested to verify soundness.

Valves with a nominal pipe size of 2 inches or smaller are forged and have screwed bonnet with canopy seal. The canopy seal is the pressure boundary while the bonnet

threads are designed to withstand the hydrostatic end force. The pressure containing parts are designed per criteria established by the ASME III Code specification.

Whereas valve missiles are not generally postulated as outlined in the above discussion, it was decided to conservatively review valves as though their bonnets or stems could become missiles. Representative of these are the valves in the region where the pressurizer extends above the operating deck. Valves in this region are the pressurizer safety valves, the motor-operated isolation valves in the relief line, the air-operated relief valves, and the air-operated spray valves. Although failure of these valves is unlikely, provisions are made to assure protection of safety-related equipment, including the containment liner, from hypothetical missiles from these valves (see Table 3.5-2).

The potential for other valve missiles in the lower compartment to damage safety equipment is assessed to be extremely limited. The same measures taken to prevent damage from other postulated non-valve missiles will be effective against damage from these hypothetical valve missiles. These measures include layout of the basic plant arrangement utilizing the design philosophy of physical separation of equipment and components through distance or by barriers. In consideration of the postulation that valve bonnet fragmentation may occur resulting in the ejection of a valve stem, valves are oriented such that any missile will strike such a barrier.

The only other postulated jet-propelled missiles from the reactor coolant piping and piping systems connected to the reactor coolant system is that represented by the temperature sensor assemblies, as listed in Table 3.5-3. The resistance temperature sensor assemblies are of two types: 'with well' and 'without well'. Two rupture locations have been postulated: around the weld (or thread) between the temperature element assembly and the boss for the 'without well' element, and the weld (or thread) between the well and the boss for the 'with well' element.

A temperature sensor is installed on the reactor coolant pumps close to the radial bearing assembly. A hole is drilled in the gasket and sealed on the internal end of a steel plate. In evaluating missile potential, it is assumed that this plate could break and the pipe plug on the external end of the hole could become a missile.

In addition, it is assumed that the weld between the instrumentation well and the pressurizer wall could fail and the well and sensor assembly could become a jet-propelled missile.

Finally, it is assumed that the pressurizer heaters could become loose and become jet-propelled missiles. Adequate barriers are provided for the missiles above to protect safety-related equipment.

3.5.1.2.2 Missile Description

The postulated control rod drive mechanism (CRDM) missiles are summarized in Table 3.5-1. The velocities of the missiles have been calculated using the method shown in Appendix 3.5A. The reactor coolant discharge rate from the break has been

calculated using the Burnell equation.[1] The coolant pressure has been assumed constant at the initial value. No spreading of the water jet has been assumed.

The missile characteristics of the bonnets of the typical valves in the region where the pressurizer extends above the operating deck are given in Table 3.5-2.

The missile characteristics of the postulated piping temperature sensor assemblies are given in Table 3.5-3. A 10-degree expansion half-angle water jet has been assumed. The missile characteristics of the piping pressure element assemblies are less severe than those of Table 3.5-3.

The characteristics of other missiles postulated within reactor containment are given in Table 3.5-4. A 10-degree expansion half-angle water jet has been assumed.

3.5.1.2.3 Electrical Cables

Electrical cables are not protected against damage from internal missiles. However, separation and redundancy of vital cables are such that any single failure within the protection system will not prevent proper protective action at the system level when required.

3.5.1.2.4 Upper Compartment

The generation of internal missiles inside the upper compartment is not postulated. Piping in this area is not used during normal operation. The upper compartment is protected from missiles generated in the lower compartment by the steel reinforced divider deck and missile shield and by the reinforced concrete walls of the upper portions of the steam generator and pressurizer compartments.

3.5.1.2.5 Ice Condenser Compartment

The generation of internal missiles inside the ice condenser is not postulated. Low energy refrigeration piping is not considered to be a potential missile source. Missiles generated in portions of the lower compartment will be prevented from entering the ice condenser compartment by the crane wall. The trajectory of missiles generated within the bottom regions of the lower compartment is such that the missiles will not pass through the inlet door openings in the lower crane wall except by ricochet. The potential for damage of such a ricocheting missile is considered negligible. This situation is shown in Figure 3.5-1. As can be seen in the figure, the location of the main portions of the reactor coolant system and of the other systems which connect to it are below Elevation 718 feet-0 inches, whereas the openings for the ice condenser lower inlet doors are between Elevation 746 feet-5 inches and Elevation 753 feet-9 inches.

3.5.1.2.6 Lower Compartment

The spectrum of missiles generated within the lower compartment is discussed in Sections 3.5.1.2.1 and 3.5.1.2.2. These missiles will not cause failure of vital systems inside the lower compartment. Particular attention was paid to the potential missile damage to the steel containment structure, the emergency core cooling system, and the containment isolation system.

Any missile generated within the lower compartment will not impair the integrity of the steel containment structure. Protection against the postulated missiles in the lower compartment was accomplished by locating a reinforced concrete wall (crane wall), a steel-reinforced concrete slab (divider deck), and steel-reinforced concrete removable blocks (control rod drive mechanism missile shield) between the primary reactor coolant system and the containment structure. Additionally, since there are openings in the crane wall, protection for the containment structure is enhanced by orienting potential missile sources, especially valve components, so that their anticipated trajectory will not permit them to pass through these openings.

The control rod drive mechanism missile shield has been located above the reactor vessel and will prevent the postulated missiles of the control rod drive system from striking the inside surface of the containment structure or the containment spray headers (see Table 3.5-1).

The accumulator tanks and associated check valves and piping are not credible sources of missiles for the containment structure. Components are prevented from becoming a source of damaging missiles by orienting the components so that anticipated missile trajectories are away from the containment structure. Some other high-pressure system components are located in the space between the crane wall and the steel containment structure. Protection is accomplished by orienting components so that the anticipated missile trajectories are away from the containment structure.

The emergency core cooling system (Section 6.3) includes four accumulator tanks which are located in separate rooms between the crane wall and the containment structure. The crane wall protects these tanks and their associated valves and piping from the postulated missiles generated within the lower compartment, and the Shield Building protects them from external missiles. The active components of the system (pumps, motors, and heat exchangers) are located in separate rooms in the Auxiliary Building. Therefore, these active components are protected from the postulated missiles generated within the lower compartment.

Isolation valves of the containment isolation system (Section 6.2.4) are located in three regions: 1) inside the containment structure, 2) between the containment structure and the Shield Building, and 3) outside the Shield Building. The isolation valves which are located inside the containment structure are protected from the postulated missiles generated in the lower compartment by the crane wall, and are protected from tornado-generated missiles by the Shield Building.

Even though the preceding methods have been used to protect the containment structure, emergency core cooling system, and the containment isolation system from potential internal missiles, the basic approach was to assure design adequacy against generation of missiles rather than to allow a missile to be generated and then try to contain the effects.

3.5.1.3 Turbine Missiles

3.5.1.3.1 Introduction

The Watts Bar turbine-generator unit was originally manufactured by Westinghouse Electric Corporation (now Siemens Energy, Inc.). The Watts Bar turbine-generator unit consists of a double-flow high pressure turbine and three double-flow low pressure turbines with extraction nozzles arranged for seven stages of feedwater heating. The turbine utilizes a Westinghouse designed electro-hydraulic control (EHC) system for control of both speed and load. The EHC system, composed of solid state electronic devices coupled through suitable electro-hydraulic transducers to a high-pressure hydraulic fluid system, provides control of the main stop, governing, intercept, and reheat stop valves of the turbine. Emergency speed protection is provided by a mechanical overspeed trip mechanism, backed up by an electrical overspeed trip circuit.

Additional turbine protection is provided that will trip the turbine on evidence of low condenser vacuum, abnormal thrust bearing wear, or low oil pressure. (See Section 10.2.4 for a complete list.) The turbine trip system is also equipped with solenoid-operated trip devices, which provide a means to initiate direct tripping of the turbine upon receipt of appropriate electrical signals, as shown in Figure 10.2-1. Also, when a turbine trip is initiated, the extraction system non-return valves are tripped to close by means of a pilot dump valve connected to the turbine trip system. For overpressure protection of the turbine exhaust hoods and the condenser, four rupture diaphragms which rupture at approximately 5 psig are provided on each turbine exhaust hood. Additional protective devices include exhaust hood high temperature alarm and manual trip.

Each stop, governing, reheating stop, and intercept valve is spring closed; therefore, it is necessary only to dump the high pressure fluid from under the servo-actuators to close the valves.

For additional details on the turbine, see Section 10.2.

3.5.1.3.2 Potential Missile Sources and Missile Characteristics

To evaluate the missile containing ability of its steam turbines, Westinghouse conducted a test program at its Research Laboratories. The tests involved spinning alloy steel discs to failure within various carbon steel containments. The discs were notched to ensure failure in a given number of segments at the desired speed. Tests results were correlated with various parameters descriptive of the missile momentum and energy and the geometry of the missile and containment.

The containments were of varying geometry but all were axisymmetric and concentric with the rotation axis of the disc. They ranged in complexity from a circular cylinder to containments which approximated actual turbine construction.

From these tests, logical criteria were evolved for predicting the missile containing ability of various turbine structures. In addition, the tests also served to determine the

mode of failure which certain structural shapes common to turbine construction undergo when impacted by a missile. This is important since the mode of failure has a great influence on the amount of energy absorbed by the turbine structure.

In 1979, a Westinghouse test program was initiated to develop guidelines for evaluating nonsymmetric impacts. Earlier tests had concentrated primarily on symmetric impacts whereas most disc collisions with the typical cylinder structure were of a nonsymmetrical type. Also in 1979, stress corrosion cracking was found in the keyway areas of several discs on low-pressure rotors being refurbished by Westinghouse. Consequently, in 1980 and 1981, Westinghouse reevaluated their turbine missile energies and probability analyses and developed a revised methodology to include the above failure mechanisms, the effects of an ultrasonic low-pressure turbine disc inspection and other miscellaneous changes resulting from the reevaluation.

In the past [Ref. 11], analyses assumed the probability of missile generation (P1) to be approximately 10^{-4} per turbine year for a favorably oriented unit, based on the historical failure rate. The strike probability (P2) was estimated on the basis of postulated missile sizes, shapes and energies and on available plant specific information such as turbine placement and orientation, number and type of intervening barriers, target geometry, and potential missile trajectories. The damage probability (P3) was generally assumed to be 1.0. The overall probability of unacceptable damage to safety-related systems (P4), which the sum over all targets of the product of these probabilities, was then evaluated for compliance with the NRC safety objective. This logic places the regulatory emphasis on the strike probability, that is, it necessitates that P2 be made less than or equal to 10^{-3}, and disregards all the plant specific factors that determine the actual P1 and its unique time dependency.

Although the calculation of strike probability is not difficult in principle, for the most part being not more than a straightforward ballistics analysis, it presents a problem in practice. The problem stems from the fact that numerous modeling approximations and simplifying assumptions are required to make tractable the incorporation into acceptable models of available data on the (1) properties of missiles, (2) interactions of missiles with barriers and obstacles, (3) trajectories of missiles as they interact with and perforate (or are deflected by) barriers, and (4) identification and location of safety-related targets. The particular approximations and assumptions made tend to have a significant effect on the resulting value of P2. Similarly, a reasonably accurate specification of the damage probability (P3) is not a simple matter because of the difficulty in defining the missile impact energy required to render given safety-related systems unavailable to perform their safety functions and the difficulty in postulating sequences of events that would follow a missile-producing turbine failure.

In view of operating experience and NRC safety objectives, the NRC staff has shifted emphasis in the reviews of the turbine missile issue from the strike and damage probability (P2xP3) to the missile generation probability (P1) and, in the process, has attempted to integrate the various aspects of the issue into a single, coherent evaluation.

Through experience of reviewing various licensing applications, the staff has concluded that P2xP3 analyses provide only "ball park" or "order of magnitude" values. Based on simple estimates for a variety of plant layouts, the staff also concludes that the strike and damage probability product (P2xP3) can be reasonably taken to fall in a characteristic narrow range which is dependent on the gross features of plant layout with respect to turbine generator orientation; i.e., (a) for favorably oriented turbine generators P2xP3 tends to lie in the range of 10^{-4} to 10^{-3}. In addition, detailed analyses such as those discussed in this evaluation show that, depending on the specific combination of material properties, operating environment, and maintenance practices, P1 can have values from 10^{-9} to 10^{-1} per turbine year depending on the turbine test and inspection intervals. For these reasons, in the evaluation of P4 (=P1xP2xP3), the probability of unacceptable damage to safety-related systems from potential turbine missile, the staff is giving credit for the product of the strike and damage probabilities of 10^{-3} for a favorably oriented turbine and 10^{-2} for an unfavorably oriented turbine, and is discouraging the elaborate calculation of these values.

The staff believes that maintaining an initial small value of P1 through turbine testing and inspection is a reliable means of ensuring that the objectives precluding turbine missiles and unacceptable damage to safety-related structures, systems, and components can be met. It simplifies and improves procedures for evaluation of turbine missile risks and ensures that the public health and safety is maintained.

For these reasons, strike and damage calculations were not performed for the current Watts Bar 2 licensing submittal and instead the missile analysis was updated for the new upgraded 13.9m2 rotors and documented in the current Missile Report [Ref. 13].

A missile probability analysis was performed for the Watts Bar 2 BB281-13.9m2 rotors with Advanced Disc Design shrunk-on discs. Based on conservative assumptions, the probability of an external missile for speeds up to 120% of rated speed is 2.13·E-6 for a disc inspection interval of 100,000 operating hours.

As documented in WCAP-16501-P [Ref. 18], Watts Bar 2 has elected to perform turbine valve test intervals at a frequency of every 6 months. This results in a probability of overspeed of 1.39 E-7 per year [Ref.13].

As summarized in the missile report [Ref. 13], these probabilities are well below the NRC limit of 1·E-4 per year for a favorably oriented unit.

The missile analysis methodology used was submitted to the NRC and approved in March 2004 [Ref. 12, which includes the NRC Safety Evaluation].

High-Pressure Turbine

High-Pressure Turbine Construction and Design

The high-pressure turbine element is of a double flow design, thus it is inherently thrust balanced. Steam from the four control valves enters at the center of the turbine

element through four inlet pipes, two in the base and two in the cover. These pipes feed both ends of the inner casing.

The high-pressure rotor is made of NiCrMoV alloy steel. The specified minimum mechanical properties are found in Section 10.2.3.1.

The main body of the rotor weighs approximately 130,500 lb. The approximate values of the transverse centerline diameter, the maximum diameter, and the main body length are 21 inch (533.4mm), 67 inch (1700mm), and 149 inch (3792mm), respectively.

The inner casing and guide blade carriers are made from stainless steel castings. The outer casing cover and base are made of carbon steel castings. The specified minimum mechanical properties are found in Section 10.2.3.1.

The approximate weights of the inner casing base and cover, guide blade carrier TS (turbine side), guide blade carrier GS (generator side), the outer casing cover, and the outer casing base are 53,500 lb., 23,810 lb, 19,400 lb, 110,500 lb., and 110,500 lb., respectively.

The casing cover and base are tied together by means of more than 100 studs. The stud material is an alloy steel for most of the joint periphery but with 12 Cr material in the blade ring fit and gland locations and having the following mechanical properties found in Section 10.2.3.1.

The studs have lengths ranging from 28 to 59 inches and diameters ranging from 2.5 in. to 3.5 in. About 90% of them have diameters ranging between 2.75 and 4 inches. The total stud cross-sectional area is approximately 620 in^2 and the total stud free-length volume is approximately 31,500 in^3.

Effects on HP Element of Turbine-Generator Unit Over-Speeding

Due to the very large margin between the high-pressure, spindlebursting speed and the maximum speed at which the steam can drive the unit with all the admission valves fully open, the probability of spindle failure is practically zero. Therefore, no missile will be developed during turbine runaway.

Evaluations of existing and new retrofit HP rotors were performed considering various failure modes to assess the potential for generating a missile [Ref. 20]. Ductile burst would require rotational speed beyond terminal speed as explained. Failure due to high cycle fatigue has not occurred in the past and the retrofit rotors have improved design safety factors. Failure due to low cycle fatigue is unlikely since rotor LCF is significantly greater than 10,000 start cycles for original and retrofit rotors.

Based on the successful operating history of nuclear HP rotors and the results of this evaluation, HP rotors of integral construction do not need to be considered when assessing missile generation probability of nuclear turbines.

Low-Pressure Turbine

Low-Pressure Turbine Construction and Design

The double flow low pressure turbine incorporates high efficiency blading, diffuser type exhaust and liberal exhaust hood design. The low pressure turbine cylinder is fabricated from steel plate to provide uniform wall thickness thus reducing thermal distortion to a minimum. The entire outer casing is subjected to low temperature exhaust steam.

The temperature drop of the steam from its inlet to the LP turbine to its exhaust from the last rotating blades is taken across two walls: an inner casing and a thermal shield. This precludes a large temperature drop across any one wall, except the thermal shield which is not a structural element, thereby virtually eliminating thermal distortion. The fabricated inner casing is supported by the outer casing at the horizontal centerline and is fixed transversely at the top and bottom and axially at the centerline of the steam inlets, thus allowing freedom of expansion independent of the outer casing. The inner casing is surrounded by the thermal shield. The steam leaving the last row of blades flows into the diffuser where the velocity energy is converted to pressure energy.

Material Properties

The outer cylinder and the inner casing are fabricated mainly of ASTM 515-GR65 or equivalent material. The minimum specified properties can be found in Section 10.2.3.1.

The low-pressure rotors are made of NiCrMoV alloy steel. The specified minimum mechanical properties can be found in Section 10.2.3.1.

The shrunk-on discs are made of NiCrMoV alloy steel. There are six discs shrunk on the shaft with three per flow. These discs experience different degrees of stress when in operation. Disc No. 3, starting from the transverse centerline, experiences the highest stress, while Disc No. 1 experiences the lowest. The minimum specified mechanical properties for the discs are shown in Section 10.2.3.1.

Effects on Low-Pressure Element of Turbine-Generator Unit Overspeeding

The bursting speed of each of the shrunk-on discs is calculated under the assumption that the disc will fail when the average tangential stress equals the maximum temperature corrected tensile strength of the disc materials. (No disc cracks are assumed. The effects of stress corrosion cracking on the low-pressure elements are discussed later in this section.) Disc 1 is calculated to fail at 177% of rated speed, Disc 2 at 174% and Disc 3 at 160%, respectively. Upon failure of any disk, further acceleration of the unit is assumed to halt because of extensive internal damage to the turbine.

Watts Bar Steam Plant

In addition to the turbine generator set at Watts Bar Nuclear Plant, there are four 3,600 rpm steam turbines at Watts Bar Steam Plant located approximately 3,600 feet from the nuclear plant (See Figure 3.5-3); however, these are not currently in operation. Therefore, they do not currently pose a hazard to the Watts Bar Nuclear Plant due to turbine missiles. In the event that the steam plant is reactivated, the turbine missile hazard analysis will be updated at that time. Potential missiles originating from any of these turbines will be considered in this analysis.

3.5.1.3.3 Primary Safety-Related Equipment Installations and Structures

The primary safety-related equipment installations and structures at the plant are those whose loss could lead to conditions in excess of the guidelines specified in 10 CFR 100. Items in this category are those in which a single strike by a potential turbine missile could result in a loss of the capability to function in the manner needed to meet these guidelines. At the Watts Bar Nuclear Plant, these are the a) Reactor Building, b) main control room, c) spent fuel pool, d) main steam valve rooms, and e) ERCW electrical conduits from manhole Nos. 1-3.

The Diesel Generator Building and Additional Diesel Generator Building were considered in the determination of unacceptable damage probability but are not listed in the previous paragraph because only a small portion of these structures must be considered. The redundancy of the diesel-generators and the separation between each diesel-generator make the buildings nearly invulnerable to a turbine missile strike. A turbine missile striking the barrier between trains A & B of the diesel generators could theoretically incapacitate both trains of emergency ac power; therefore, an area larger in section that the barrier is included in the analyses. The contribution of this area to the total probability of unacceptable damage is negligible.

The locations of these essential safety-related equipment installations and structures as well as their relationship to the potential turbine missile sources are shown in Figure 3.5-4.

Those safety-related equipment installations and structures not considered essential for the preservation of safety if struck by a dangerous turbine missile were those that are redundant.

Included in this group are the:

(1) Essential raw cooling water (ERCW) Intake Pumping Station - This station is considered to have sufficient redundance that a single turbine missile strike cannot cause unacceptable damage. The addition of a missile-resistant roof on this structure has further reduced the chance for any damage to this area from turbine missiles.

(2) Heating and ventilating equipment installations needed for temperature control of engineered safety features equipment. All installations of this kind are redundant and adequately separated to prevent a loss by single turbine missiles.

3.5.1.3.4 Turbine Missile Protection Criterion

The turbine missile protection criterion utilized in the design of the Watts Bar Nuclear Plant was that the probability of unacceptable damage should not be significant. In this instance, an event having a probability of causing unacceptable damage on the order of about 10^{-7} per year per reactor unit at the plant is not considered significant. Therefore, for the two-unit Watts Bar Nuclear Plant, an event having a probability of occurrence on the order of 2×10^{-7} will fulfill this criterion.

The turbine placement and orientation are shown in Figure 3.5-4. The orientation of the turbine axis is parallel with the containment. With the exception of the ERCW conduit, there are no essential systems or structures located inside the low trajectory missile zones defined in NRC Regulatory Guide 1.115.

For the ERCW conduit target, the strike probability due to a low trajectory turbine missile is considered to be zero since the rotation of the turbine will preclude a tangential missile from directly impacting the ERCW conduit as the turbine pedestal and Turbine Building structure provide barriers to the trajectory.

Although low trajectory missiles are excluded from plant design considerations, a probabilistic analysis has been performed for both low and high trajectory missiles.

3.5.1.3.5 Turbine Missile Hazard Evaluation

The turbine missile hazard evaluation made for the Watts Bar Nuclear Plant considers missiles produced during accidents at or near rated speed and at destructive overspeed. The evaluation also took into account different missile dispersions that are likely to occur for center disc missiles and for end disc missiles. This was done using the expression:

$Pr(H)$ = The probability of event H. Event H is the receipt of unacceptable damage.

$$
\begin{aligned}
Pr(H) = \; & N_1 x Pr(A_1)[Pr(B_1)Pr(C_1)Pr(D_1)Pr(F_1)Pr(G_1) \\
& +Pr(B_1)Pr(C_1)Pr(D_2)Pr(E)Pr(F_2)Pr(G_1) \\
& +Pr(B_2)Pr(C_1)Pr(D_1)Pr(F_3)Pr(G_2) \\
& +Pr(B_2)Pr(C_1)Pr(D_2)Pr(E)Pr(F_4)Pr(G_2) \\
& +Pr(B_3)Pr(C_2)Pr(D_1)Pr(F_5)Pr(G_3) \\
& +Pr(B_3)Pr(C_2)Pr(D_2)Pr(E)Pr(F_6)Pr(G_3)] \\
& +N_2 x Pr(A_2)[Pr(B_1)Pr(C_1)Pr(D_1)Pr(F_7)Pr(G_4) \\
& +Pr(B_1)Pr(C_1)Pr(D_2)Pr(E)Pr(F_8)Pr(G_4)
\end{aligned}
$$

$$+Pr(B_2)Pr(C_1)Pr(D_1)Pr(F_9)Pr(G_5)$$
$$+Pr(B_2)Pr(C_1)Pr(D_2)Pr(E)Pr(F_{10})Pr(G_5)$$
$$+Pr(B_3)Pr(C_2)Pr(D_1)Pr(F_{11})Pr(G_6)$$
$$+Pr(B_3)Pr(C_2)Pr(D_2)Pr(E)Pr(F_{12})Pr(G_6)]$$

where:

N_1	=	The number of turbogenerator sets at Watts Bar Nuclear Plant. In this instance, N_1=2.
N_2	=	The number of turbogenerator sets at Watts Bar Steam Plant. In this instance, N_2=4.
$Pr(A_l)$	=	The probability of event A_1 occurring per turbine year, Event A1 is the disintegration of a low-pressure turbine at the nuclear plant.
$Pr(A_2)$	=	The probability of event A_2 occurring per turbine year. Event A_2 is the disintegration of a 3,600 rpm turbine at Watts Bar Steam Plant.
$Pr(B_1)$	=	The probability of event B_1. Event B_1 is the fraction of the turbine disintegrations that will generate missiles with exit velocities in the lower portion of the rated speed missile spectrum.
$Pr(B_2)$	=	The probability of event B_2. Event B_2 is the fraction of the turbine disintegrations that will generate missiles with exit velocities in the upper portion of the rated speed missile spectrum.
$Pr(B_3)$	=	The probability of event B_3. Event B_3 is the fraction of over-speed turbine disintegrations occurring per turbine disintegration.
$Pr(C_1)$	=	The probability of event C_1. Event C_1 is the fraction of rated speed turbine disintegrations that produce dangerous missiles.
$Pr(C_2)$	=	The probability of event C_2. Event C_2 is the fraction of over-speed turbine disintegrations that produce dangerous missiles.
$Pr(D_1)$	=	The probability of event D_1. Event D_1 is the fraction of times that center disc missiles will be produced per dangerous missile producing turbine disintegration.
$Pr(D_2)$	=	The probability or event D_2. Event D_2 is the fraction of times that end disc missiles will be produced per dangerous missile producing turbine disintegration.
$Pr(E)$	=	The probability of event E. Event E is the fraction of times end disc missiles will be deflected towards essential plant equipment per end disc missile produced.
$Pr(F_l)$	=	The probability of event F_l. Event F_l is the fraction of times a center, disc missile from Watts Bar Nuclear Plant (WBNP) having an exit velocity in the lower portion of the rated speed missile velocity spectrum will strike essential equipment or structures.

$Pr(F_2)$ = The probability of event F_2. Event F_2 is the fraction of times an end disc missile from WBNP having an exit velocity in the lower portion of the rated speed missile velocity spectrum will strike essential equipment or structures.

$Pr(F_3)$ = The probability of event F_3. Event F_3 is the fraction of times a center disc missile from WBNP having an exit velocity in the upper portion of the rated speed missile velocity spectrum will strike essential equipment or structures.

$Pr(F_4)$ = The probability of event F_4. Event F_4 is the fraction of times an end disc missile from WBNP having an exit velocity in the upper portion of the rated speed missile velocity spectrum will strike essential equipment or structures.

$Pr(F_5)$ = The probability of event F_5. Event F_5 is the fraction of times an over-speed center disc missile from WBNP will strike essential equipment or structures.

$Pr(F_6)$ = The probability of event F_6. Event F_6 is the fraction of times an over-speed end disc missile from WBNP will strike essential equipment or structures.

$Pr(F_7)$ = The probability of event F_7. Event F_7 is the fraction of times a center disc missile from Watts Bar Steam Plant (WBSP) having an exit velocity in the lower portion of the rated speed missile velocity spectrum will strike essential equipment or structures.

$Pr(F_8)$ = The probability of event F_8. Event F_8 is the fraction of times an end disc, missile from WBSP having an exit velocity in the lower portion of the rated speed velocity spectrum will strike essential equipment or structures.

$Pr(F_9)$ = The probability of event F_9. Event F_9 is the fraction of times a center disc missile from WBSP having an exit velocity in the upper portion of the rated speed missile velocity spectrum will strike essential equipment or, structures.

$Pr(F_{l0})$ = The probability of event F_{10}. Event F_{10} is the fraction of times an end disc missile from WBSP having an exit velocity in the scooper portion of the rated speed missile velocity spectrum will strike essential equipment or structures.

$Pr(F_{11})$ = The probability of event F_{11}. Event F_{11} is the fraction of times an over-speed center disc missile from WBSP will strike essential equipment or structures.

$Pr(F_{12})$ = The probability of event F_{12}. Event F_{12} is the fraction of times an over-speed end disc missile from WBSP will strike essential equipment or structures.

$Pr(G_1)$ = The probability of event G_1. Event G_1 is the fraction of times that a strike by a rated speed missile with an exit velocity in the lower portion of the rated speed missile velocity spectrum from WBNP will result in the elimination of the capability provided by that safety-related equipment installation or structure.

$Pr(G_2)$ = The probability of event G_2. Event G_2 is the fraction of times that a strike by a rated speed missile with an exit velocity in the upper portion of the rated speed missile velocity spectrum from WBNP will result in the elimination of the capability provided by that safety-related equipment installation or structure.

$Pr(G_3)$ = The probability of event G_3. Event G_3 is the fraction of times that a strike by an over-speed missile from WBNP will result in the elimination of the safety-related equipment or structure.

$Pr(G_4)$ = The probability of event G_4. Event G_4 is the fraction of times that a strike by a rated speed missile with an exit velocity in the lower portion of the rated speed missile velocity spectrum from WBSP will result in the elimination of the capability provided by that safety-related equipment installation or structure.

$Pr(G_5)$ = The probability of event G_5. Event G_5 is the fraction of times that a strike by a rated speed missile with an exit velocity in the upper portion of the rated speed missile velocity spectrum from WBSP will result in the elimination of the capability provided by that safety-related equipment installation or structure.

$Pr(G_6)$ = The probability of event G_6. Event G_6 is the fraction of times that a strike by an overspeed missile from WBSP will result in the elimination of the safety-related equipment or structure.

Additional factors and interpretations utilized to make this expression represent conditions at Watts Bar Nuclear Plant are:

(1) The low-pressure turbine disintegration rate, $Pr(A_1)$, will be $7x10^{-5}$/year. Such a value is conservatively determined to represent state-of-the-art in References [2] and [10] for turbines.

(2) The 3,600 rpm turbine disintegration rate, $Pr(A_2)$, will be $1x10^{-4}$/year. This value represents current data failure rates, and does not consider less than 100% plant utilization or planned unit phase-out.

(3) The center of each turbine assembly was assumed to be the origin of the turbine missiles.

(4) Only one turbine disc from one turbine assembly was assumed to disintegrate in a turbine accident producing dangerous turbine missiles.

(5) The fraction of turbine disintegrations that will occur in the rated speed accident realm was assumed to be 0.8 and the fraction of turbine disintegrations that will occur in the overspeed accident realm was assumed to be 0.2. Such values were judged to be appropriate based on data provided in References [2] and [10]. This data source indicated that 14 known failures since 1951 occurred at or close to rated speed, and seven overspeed incidents occurred in that general span of time. This reference also indicated

that the incidents of overspeed, with or without failure, have decreased markedly since 1961 due to organized programs of checking all valves by load change tests. Consequently, the values 0.8 and 0.2 are considered to be appropriately weighted fractions.

(6) The rated speed accident missile speed spectrum was assumed to contain two domains and the overspeed accident missile speed spectrum was assumed to contain one domain. The first rated speed missile domain was created to represent missiles in the lower exit speed portion of the rated speed missile spectrum, while the second domain was created to represent missiles in the upper exit speed portion of the rated speed missile spectrum. It was then assumed that half of the rated speed spectrum fell in each of the two domains. Therefore, $Pr(B_1)=0.4$, $Pr(B_2)=0.4$, and for over-speed missiles, $Pr(B_3)=0.2$. From these determinations, consideration is given to both the high terminal speed missiles that are most likely to eliminate essential ESF functional capabilities in the event of impact and the higher likelihood of the lesser speed missiles to impact upon the essential equipment or structures in the two unit complex.

(7) The fraction of dangerous missiles produced per rated speed turbine disintegration was assumed to be 0.7, thus making $Pr(C_1)$ equal to 0.7. This is considered appropriate and quite conservative because 1) seven of the ten turbine disintegrations listed in Table 3 of Reference [1] for the 70,280 turbine years of operation produced missiles, and 2) all of the missiles under consideration were assumed to possess mass characteristics appropriate to causing maximum destruction potential. See item (11), below. The fraction of dangerous missiles produced per over-speed accident was assumed to be 1.0, thereby making $Pr(C_2)=1.0$.

(8) The fraction of missile-producing turbine accidents generating center disc missiles was assumed to be 0.9 while those generating end disc missiles was assumed to be 0.1. Therefore, $Pr(D_1)$ and $Pr(D_2)$ were set equal to 0.9 and 0.1, respectively.

(9) Half of the end disc missiles produced will be deflected away from safety-related components and structures. The basis for this judgment comes from the deflection range established for end disc missiles in Reference [4]. This reference indicates that end disc missile deflections during the turbine casing penetration process will most likely fall between 0° to 25°. Such a deflection pattern in the plant arrangements at Watts Bar Nuclear and Steam Plants, where all potential safety-related equipment lies on one side of a 180° sector defined by the disc plane of rotation indicates that half of the end disc missiles will be deflected away from any essential plant items. Therefore, Pr(E) is set equal to 0.5. It should be noted that the same reference indicates that center disc missiles can be deflected plus or minus 5° to the disc plane of rotation; therefore, any center disc missile may be deflected towards essential safety equipment or structures. For this reason, the angular bias function is not applicable to center disc missiles.

(10) A representative lumped missile speed value in each of the three exit speed domains defined in (6), above, was assumed. For the turbines at both power plants, exit speeds of 250 ft/sec and 350 ft/sec were assumed for missiles in the lower and upper portion of the rated speed accident missile domain, respectively. An exit speed of 550 ft/sec was assumed for missiles in the overspeed domain.

These assumptions appear very conservative. Evidence obtained from an analysis of the Gallatin turbine accident[3], shows that the most energetic missile had a speed not greater than 300 ft/sec. All the other 22 missiles produced in this accident weighing more than 100 pounds had exit speeds well below this value. Further support for this claim comes from References [2] and [10] where it is stated that the more probable missile velocities are between 200 and 500 ft/sec. An additional degree of conservatism is applied in this analysis by using an uncertainty function of +10% on all the turbine exit velocities.

(11) All dangerous missiles produced in turbine disintegrations are those having the highest kinetic energy after completion of the turbine penetration process. As indicated previously, these are disc fragments having about 1/4 of the disc mass. One fragment is assumed emitted per quadrant in the disc plane of rotation. Two of the fragments are therefore deflected into the ground around the turbine and cause no damage. Conservation of momentum principles indicate that the other two missiles in this worst case situation would emerge with upward directed trajectory on each side of the turbine axis of rotation. Because these missiles will be moving in opposite horizontal directions from each other, only one can present a threat to any given piece of equipment.

(12) A disablement factor of 0.5 was utilized to make the transformation from 250 ft/sec missile impact probabilities to unacceptable damage probabilities. Therefore, $Pr(G_1) = 0.5$. The basis for this is presented in Reference [2]. On page 195 it states that "With the cited concrete thickness (4.5 ft wall, 3.5 ft dome) a missile velocity of 300 ft/sec is not high enough to penetrate either a wall or a dome." On page 192, in the same reference, it is stated that "The kinetic energy may be reduced as much as 20% for high velocity, irregularly shaped missiles" to account for the effect of drag forces in air. In this instance, a 20% reduction in kinetic energy if utilized, would reduce the 250 ft/sec expected impact speed to approximately 225 ft/sec. However, for conservatism, the unreduced velocity of 250 ft/sec was used. At such a speed, a 0.5 disablement factor is judged to be appropriate. However, the disablement factor for strikes by all faster missiles was set equal to 1.0. Such a factor takes all impacts by other than 250 ft/sec missiles upon essential equipment installations or structures to be certain loss of service of the item struck.

Consequently, $Pr(G_2)$, $Pr(G_3)$, $Pr(G_4)$, $Pr(G_5)$, and $Pr(G_6)$ in the analytical model are equal to 1.0.

Strike probabilities upon the essential safety-related components and structures identified in Section 3.5.1.3.3 were calculated by the methodology described in Reference [4] and Item (10), above. Both two and three dimensional analyses were conducted.

The three dimensional analysis of the strike probability was an investigation to determine the probability that a missile will emerge from the turbine casing with the velocity vector directed toward essential safety-related items. The results obtained indicate that no missiles can emerge from any of the low-pressure turbines at a sufficiently low trajectory to strike these structures. (See Figure 3.5-5). Such findings indicate that there is no hazard to essential safety-related components or structures from missiles on the upward part of their trajectories.

The two dimensional analysis of the strike probability upon the safety-related components listed in Section 3.5.1.3.3 was an analysis to find the impact probabilities on these items during the downward part of the missile trajectory. Such analyses for rated speed and over-speed center disc and end disc missiles provided values for the only undefined factors in the turbine hazard evaluation equation given previously [$Pr(F_l)$, $Pr(F_2)$ ... $Pr(F_{12})$]. The results obtained from this analysis are presented in Table 3.5-6. This table shows the probability of unacceptable damage calculated in the manner described in the analytical model given previously. From this tabulation, it can be seen that the probability for unacceptable damage at the site totals 2.79×10^{-7} events/year.[14]

3.5.1.3.6 Turbine Missile Selection

Analyses described above indicate that the hazard from turbine missiles at the Watts Bar Nuclear Plant is not significant. A three dimensional analysis of the hazard showed that the probability of unacceptable damage due to turbine missiles on the upward portion of their flight was zero. A two dimensional analysis of the hazard from turbine missiles on their downward flight path showed that the probability of unacceptable damage was about 2.79×10^{-7} events/year at the nuclear plant site.

Since each step in the development of the analytical model described in Section 3.5.1.3.5 contains one or more conservative assumptions, all aspects associated with these two analyses support the contention that the turbine missile hazard at this plant is not significant.

In addition, the plant uses turbines designed, manufactured, installed, and operated in accordance with standards that minimize the possibility of an accident that may produce dangerous missiles. The unit has its essential, safety-related equipment installations and structures positioned to minimize the strike probability on these items. Probability of unacceptable damage for critical structure are presented in Table 3.5-10.

Such findings indicate that the potential for turbine generated missiles at the Watts Bar Nuclear Plant is credible, but not significant. Therefore, turbine missile hazards need not be considered in the design of the Watts Bar Plant.

3.5.1.4 Missiles Generated By Natural Phenomena

Category I structures at Watts Bar Nuclear Plant are designed for tornado- generated missiles based on the following:

(1) Spectrum A (see Table 3.5-7) was used in the design of:

(a) Manholes and protective slabs over manholes for Class 1E electric systems.

(b) Protection for Class 1E conduit duct runs.

(c) Hatch assemblies for personnel access openings to pipe tunnels A & B.

(d) Slabs supporting the ERCW piping at the Intake Pumping Station.

(e) Pipe encasement at the Diesel Generator Building.

(f) Refueling Water Storage Tank foundation.

(g) Roofs and walls of Category I structures except as noted for Spectrums B, C & D.

(h) Protection for diesel generator exhaust stacks.

(i) Protection for fuel oil storage tank vent lines in Diesel Generator Building.

(2) Spectrum B (see Table 3.5-8) was used in the design of the equipment doors and bulkheads on the Diesel Generator Building.

(3) Spectrum C (see Table 3.5-9) was used in the design of the structures not covered by Items 1, 2 or 4 (Intake pumping station structural steel roof, ERCW standpipe encasement, ERCW discharge overflow structure, and ERCW valve covers).

(4) Spectrum D (See Table 3.5-17) was used in the design of the Additional Diesel Generator Building and any additional Category I Structures after July 1979.

3.5.1.5 Missiles Generated by Events Near the Site.

There are no postulated accidental explosions in the vicinity of the site (See Section 2.2.3). The only significant nearby industrial activity is the Watts Bar Steam Plant. Turbine missiles from this plant are treated in Section 3.5.1.3. No other missiles are considered significant. Therefore, the Watts Bar Nuclear Plant need not be designed for protection against missiles generated by explosions of trucks, trains, ships, barges, industrial facilities, hydrogen storage tanks, pipelines and military facilities.

3.5.1.6 Aircraft Hazards

There is one federal airway passing within two miles of the nuclear facility. The probability per year of an aircraft crashing into the plant (P_{FA})[16] is estimated in the following manner:

$P_{FA} = C \times N \times A/w$

where:

C = inflight crash rate per mile for aircraft using airway.

w = width of airway (plus twice the distance from the airway edge to the site when the site is outside the airway) in miles.

N = number of flights per year along the airway, and

A = effective area of plant in square miles.

For the Watts Bar site, $C = 4.0 \times 10^{-10}$, w = 8 miles, N = 2 x 2,000/year, A = 0.01 mi^2. The value for N, per Section 2.2.2.5, was doubled to account for increases in aircraft traffic. Therefore, $P_{FA} = 2.0 \times 10^{-9}$/year. This conservative upper bound probability is less than the Standard Review Plan range of "1×10^{-7}" and indicates that further consideration of hazard from this federal airway is unnecessary.

There are no airports located within five miles of the site. There are no airports with projected operations greater than 500 d^2 movements per year located within 10 miles of the site or greater than 1,000 d^2 outside 10 miles, where d is the distance in miles from the site.

There are no military installations or any airspace use that might present a hazard to the site. Therefore, aircraft hazards need not be considered in the design of the Watts Bar Nuclear Plant.

3.5.2 Systems To Be Protected

Systems whose failure could lead to offsite radiological consequences or which are required for reactor shutdown and cooldown under normal and/or design basis conditions are listed in Table 3.2-1.

These include 1) the fluid handling equipment in ANS Safety Classes 1, 2a, 2b or 3 listed by system in Tables 3.2-2a and 3.2-2b, 2) Class 1E electrical systems and components listed in Table 3.2-3, and 3) the Heating, Ventilating, and Air Conditioning components in TVA Classes B, M, Q, and S as described in Table 3.2-2a. A more detailed discussion of required equipment and its safety-related implications may be found in the FSAR sections covering individual system.

It is important to note that all of the equipment referenced above is required for some safety-related function but not all at once. The list of required equipment for a particular missile event depends on the nature of the missile (whether it is associated

with or can cause a LOCA, whether or not the missile is being generated from a safety-related piece of equipment, etc). Hence, much of the missile damage consideration outside containment can be reduced to looking at those systems and components required for reactor shutdown, coolant system makeup, and for decay heat removal to the ultimate heat sink.

Table 3.5-14 lists outdoor features, including air intakes and exhausts, which may be required to perform a safety-related function coincident with or following the occurrence of a tornado.

For the Watts Bar Nuclear Plant the layout of structures and equipment is such that there are no systems or components which rely upon redundancy and separation alone for protection against externally generated missiles. There are however certain systems and components which, due to their location and/or separation of trains, are inherently protected against specific types of missiles. This protection by separation and location concept has been addressed where applicable in the missile analyses of Section 3.5.1.

3.5.3 Barrier Design Procedures

To arrive at a formula to use in computing penetration into concrete walls, a comparison was made of formulas listed in ORNL-NSIC-22, "Missile Generation and Protection in Lightwater-Cooled Power Reactor Plants." Four equations were studied in ORNL-NSIC-22 in connection with penetration in concrete. Two of these, the Army Corps of Engineers formula and the National Defense Research Committee formula, do not apply for impact velocities under 500 ft/sec and thus are not applicable here (velocity of 300 mph = 440 ft/sec). The remaining two equations are the modified Petry formula and the Ballistic Research Laboratory formula. These two formulas were compared for a 6-inch diameter missile of 100 pounds and a 16-inch diameter missile of 2,500 pounds with velocities in the range from 0 to 500 ft/sec. As seen in Figures 3.5-6 and 3.5-7, the Petry formula is the most conservative for velocities greater than 150 to 200 mph.

The following describes the barrier procedures utilized for concrete barriers. The depth to which a missile penetrated a concrete wall was estimated by use of the modified Petry formula.[6]

$$D' = 12\ KAV'\ [1 + e^{-4(a - 2)}]$$

where D' = depth of penetration V = impact velocity

K = A material constant A = weight of missile/impact area of missile

$$V' = \log_{10}\left[1 + \frac{V^2}{215{,}000}\right] \qquad a = \frac{T}{12KAV'}$$

T = wall thickness

The results are given in Figures 3.5-8 and 3.5-9. According to C. V. Moore,[7] spalling on the inside face of a wall does not occur for penetrations less than two-thirds the wall thickness.

Conservatism was assured by assuming nondeformable missiles in the penetration analysis using the modified Petry formula.

None of the postulated missiles described in Section 3.5.1, internal or external, will impair the capability of the engineered safety features to shut down the reactor or to maintain the reactor in a safe shutdown mode indefinitely. For portions of the engineered safety features located within the containment structure, protection against missiles generated inside containment is accomplished with the basic approach of assuring design adequacy against generation of credible missiles rather than to allow missile formation and try to contain the subsequent effects. Further, valves are oriented so that the trajectory of missiles will not likely pass through openings in the crane wall and the valve bonnets and stems will not penetrate the containment shell should they strike it. For these same engineered safety features, protection against tornado-generated missiles is provided by the Shield Building. If one of the pressurizer heaters in the bottom of the pressurizer should become loose and become a jet-propelled missile, it would move downward and could strike the pressurizer surge line beneath the pressurizer. The line will not be perforated and will not jeopardize the capability to bring the nuclear facility to a safe shutdown.

For those portions of the engineered safety features located outside the Shield Building and required for shutdown of the reactor and/or indefinite maintenance of the reactor in the safe shutdown mode, protection is provided against tornado-generated missiles. Protection is provided by locating these features within structures which have been designed to withstand damage by the spectrum of credible tornado-generated missiles.

The postulated missiles inside the containment as defined in Tables 3.5-1, 3.5-2, 3.5-3, and 3.5-4 have been investigated to determine their penetration characteristics. Penetration depths, or minimum thickness to just perforate, have been calculated based upon three commonly used equations. They are:

(1) The Stanford Equation.

(2) The Ballistics Research Laboratory Equation.

(3) The Recht and Ipson Equation.

The minimum thicknesses to just perforate a plate having the characteristics of SA–516-GR70 carbon steel represent the largest values obtained from the three above-mentioned equations. The worst case involves a penetration depth that is 45% of the actual containment thickness. Based upon the analysis, it is reasoned that none of the postulated missiles pose a threat to the integrity of the containment.

Tornado missile impact loads, where required, were calculated based upon several applicable techniques. Impact loads for all missiles of Spectrum A (Table 3.5-7) except missile A3, the 4,000-pound automobile at 50 miles per hour, were determined by the relationships presented in Reference [9].

Missile A3 loads were based on actual test results and analysis technique. Time histories of decelerations were obtained from the National Highway Safety Bureau for automobile crash tests early in a crash safety program. Their time histories were converted to shock spectra by the usual methods and dynamic load factors were plotted against period of structures or elements of structures. An envelope was then constructed enveloping all spectra.

To determine the automobile impact load on a structure or element of a structure, the natural period of the item was determined and the appropriate loading obtained from the shock spectra. This technique yields the maximum load irrespective of time.

Values obtained from this technique have been corroborated with subsequent reports by the National Highway Safety Bureau. In Reference [5], time histories of forces are presented for several automobile crash tests which are closely confirmatory. The impact loads obtained by the previously described methods were then applied to the structures and the structures were analyzed for the effect of the loads by conventional analytical methods. Impact loads from the missiles of Spectrum C (Table 3.5-9) were calculated using the procedures of Reference [8]. See Section 3.5.1.4 for a discussion of structures designed for Spectrum C.

Tornado missile protection for all safety-related buried piping is provided by one of the four protective schemes described below.

(1) 10 feet of compacted fine-grained soil.

(2) 7 feet of compacted crushed stone.

(3) 18 inches of conventional unreinforced concrete.

(4) 18 inches of roller-compacted unreinforced concrete.

In each scheme, a 12-inch cushion of either compacted sand or fine-grained earthfill is required over the top of the pipe.

The acceptability of each scheme has been verified by a full-scale test program[16] in which missiles from the NRC spectrum were dropped from a helicopter into test pits of crushed stone or earthfill and onto concrete slabs. The missiles used in the testing were:

(1.a) 1,500-pound utility pole,

(2.a) 12-inch diameter schedule 40 steel pipe,

(3.a) 1-inch diameter steel rod,

(4.a) 3-inch diameter schedule 40 steel pipe, and

(5.a) 6-inch diameter schedule 40 steel pipe.

Of these missiles, the 12-inch pipe and utility pole caused the greatest penetration depths. Impact velocities of 200-215 ft/s were achieved for both the utility pole and 12-inch pipe which equals or exceeds the design velocities for those missiles as listed in Tables 3.5-7 and 3.5-9. The protective thicknesses listed above are based on the maximum thicknesses observed in the test program and are, therefore, conservatively chosen.

It is concluded that the missile protection criteria to which the plant has been analyzed and protected against comply with Criteria 2 and 4 of 10 CFR 50, Appendix A, General Design Criteria for Nuclear Power Plants.

3.5.3.1 Additional Diesel Generator Building (And Other Category I Structures Added After July 1979)

The openings in the walls and roof for access, ventilation, air intakes, and exhaust discharge, are designed to withstand the effects from the tornado missiles listed in Spectrum D of Table 3.5-17. The 480V auxiliary board room (ABR) ventilation air intake vent is the only primary safety-related equipment located outside the Additional Diesel Generator Building not protected against tornado missiles. The roof opening for the ABR vent is protected against tornado missile entry by a missile shield installed inside the roof structure. In-lieu of protecting the ABR vent from tornado missiles, operator actions are specified in the event of a tornado warning to restore ventilation cooling to the ABR. Overall structural response evaluation of concrete barriers to tornado missile impact was performed using the general requirements of Appendix C, ACI 349-76, "Code Requirements For Nuclear Safety-Related Concrete Structures." Minimum concrete thickness required to resist penetration, perforation or backface scabbing from these tornado missiles are given in Table 3.5-18.

REFERENCES

(1) Burnell, J., 'The Flow of Boiling Water Through Nozzles, Orifices, and Pipes.' The Institute of Engineers, Australia, March 1946.

(2) Bush, Spencer H., 'Probability of Damage to Nuclear Components Due to Turbine Failures.' Nuclear Safety Magazine, Volume 14, No. 3, May-June 1973, pages 187-201.

(3) Proctor, L. D. 'Gallatin Turbine Disintegration Study,' TVA Document No. TI-275-4 RO, October 9, 1974.

(4) Semendares, S. N., 'Topical Report-Methods of Determining the Probability of a Turbine Missile Hitting a Particular Plant Region,' WCAP-7861, February 1972.

(5) DeLeys, Norman J., et al., 'Full Scale Crash Tests of Rigid Simulated Heavy Vehicle Underride Guard,' Cornell Aeronautical Laboratory, Inc., Buffalo, New York, March 1970. Report prepared for Department of Transportation, Federal Highway Administration, National Highway Safety Bureau, Washington, DC.

(6) Amirikan, A., 'Design of Protective Structures,' NP-3726, Bureau of Yards and Docks, Department of the Navy, Washington, DC, August 1950.

(7) Moore, C. V., 'The Design and Barricades for Hazardous Pressure Systems,' Nuclear Engineering and Design, Vol. 5, 1967, pp. 85-86.

(8) Design of Structures for Missile Impact', BC-TOP-9A, Revision 2 Topical Report, Bechtel Power Corporation, San Francisco, California, September 1974.

(9) Westinghouse Systems Standard Design Criteria, "Protection Criteria Against Dynamic Effects Resulting from Pipe Rupture" (Identification No. 1.19).

(10) Bush, S.H., "Probability of Damage to Nuclear Components Due to Turbine Failure." CONF-730304, Topical Meeting on Water Reactor Safety, Salt Lake City, Utah, March 26-28, 1973, pp. 84-104.

(11) Letter from Mr. Herbert N. Berkow, NRC Director, to Mr. Stan Dembkoski, SWPC Director, dated March 30, 2004, Subject: Final Safety Evaluation Regarding Referencing the Siemens Technical Report No. CT-27332, Revision 2, "Missile Probability Analysis for the Siemens 13.9m2 Retrofit Design of Low-Pressure Turbines by Siemens AG", TAC No. MB7964.

(12) Topical Report TP-04124-NP-A: "Missile Probability Analysis for the Siemens 13.9m2 Retrofit Design of Low-Pressure Turbine by Siemens AG", Submitted to the Nuclear Regulatory Commission, For Public Record, June 7, 2004, Siemens Westinghouse Power Corporation.

Note: Topical Report TP-04108-P-A: "Missile Probability Analysis for the Siemens 13.9m2 Retrofit Design of Low-Pressure Turbine by Siemens AG", Submitted to the Nuclear Regulatory Commission, Not For Public Record, June 7, 2004, Siemens Westinghouse Power Corporation. This is the proprietary version of the same report referenced above.

(13) CT-27467, Missile Report, TVA Watts Bar 2, BB281-13.9m2, October 6, 2009, Siemens Energy, Inc.

(14) Calculation TI-858, "Probability of Unacceptable Damage to the Diesel Generator Building from Turbine Missiles."

(15) Calculation TI-521, "Probability for Turbine Missile Strike Damage at Watts Bar Nuclear Plant."

(16) CEB Report CEB-81-20, "Testing of Protective Cover for Essential Buried Structures."

(17) U.S. Nuclear Regulatory Commission NUREG-0800, "Standard Review Plan," Section 3.5.1.6.III.2.

(18) WCAP-16501-P, Revision 0, "Extension of Turbine Valve Test Frequency Up to 6 Months for BB-296 Siemens Power Generation (Westinghouse) Turbines with Steam Chests", February 2006, Westinghouse Electric Company, LLC, Westinghouse Proprietary Class 2.

(19) Technical Instruction TI-227, "Turbine Integrity Program with Turbine Overspeed Protection (TIPTOP)", Revision 3, October 24, 2008, TVA Watts Bar Nuclear Plant.

(20) EC-02262, "Missile Generation Risk Assessment for Original and Retrofit Nuclear HP Rotors", December 17, 2002, Siemens Westinghouse Power Corporation.

Table 3.5-1 Summary of Postulated CRDM Missile Analysis

POSTULATED MISSILES	WEIGHT(5) (LB)	THRUST AREA (in^2)	IMPACT AREA (in^2)	IMPACT(1) VELOCITY(4) (Ft/SEC)	KINETIC(1) ENERGY (Ft-Lbs)
1. Mechanism Housing Plug	11	5.94(2)	7.07	450	34,600
2. Drive Shaft Assembly	136	2.41	2.41	179	69,800
3. Mechanism Housing(3) Plug And Drive Shaft Impacting On Same Missile Shield Spot	-	-	-	-	-
4. Drive Shaft Latched To Mechanism	1500	2.41	11.04	34	26,400

NOTES:

(1) Velocities and kinetic energies for a distance of 4.389(ft) between top of CRDM Housing and Missile Shield.

(2) Flow discharge area (equal to thrust area-no expansion of jet assumed).

(3) Assume drive shaft further pushes housing plug into shield.

(4) For the calculational methods, see Appendix 3.5A.

(5) Dry Weight

Table 3.5-2 Typical Postulated Valve Missile Characteristics

Missile Description	Weight (lb)	Flow Discharge Area (in^2)	Thrust Area (in^2)	Impact Area (in^2)	Weight to Impact Area Ratio (psi)	Terminal[1] velocity (fps)
Safety Relief Valve Bonnet (3" x 6" or 6" x 6")	350	2.86	80	24	14.5	110
3 Inch Motor Operated Isolation Valve Bonnet (plus motor and stem) (3")	400	5.5	113	28	14.1	135
2 Inch Air Operated Relief Valve Bonnet (plus stem)	75	1.8	20	20	3.75	115
3 Inch Air Operated Spray Valve Bonnet (plus stem)	120	5.5	50	50	2.4	190
4 Inch Air Operated Spray Valve	200	9.3	50	50	4	190

NOTES:

1. For the calculational methods, see Appendix 3.5A

Table 3.5-3 Postulated Piping Temperature Element Assembly Missile Characteristics

1.	For a tear around the weld between the boss and the pipe:		
	Characteristics	"without well"	"with well"
	Flow Discharge Area	0.11 in^2	0.60 in^2
	Thrust Area	7.1 in^2	9.6 in^2
	Missile Weight	11.0 lb	15.2 lb
	Area of Impact	3.14 in^2	3.14 in^2
	$\left[\frac{MissileWeight}{ImpactArea}\right]$	3.5 psi	4.84 psi
	Velocity (1)	20 ft/sec	120 ft/sec
2.	For a tear at the junction between the temperature element assembly and the boss for the "without well" element and at the junction between the boss and the well for the "with well" element.		
	Characteristics	"without well"	"with well"
	Flow Discharge Area	0.11 in^2	0.60 in^2
	Thrust Area	3.14 in^2	3.14 in^2
	Missile Weight	4.0 lb	6.1 lb
	Area of Impact	3.14 in^2	3.14 in^2
	$\left[\frac{MissileWeight}{ImpactArea}\right]$	1.27 psi	1.94 psi
	Velocity	75 ft/sec	120 ft/sec

NOTES:

1. For the calculational methods, see Appendix 3.5A

Table 3.5-4 Characteristics of Other Missiles Postulated Within Reactor Containment

	Reactor Coolant Pump Temperature Element	Instrument Well of Pressurizer	Pressurizer Heaters
Weight	0.25 lb	5.5 lb	15 lb
Discharge Area	0.50 in^2	0.442 in^2	0.80 in^2
Thrust Area	0.50 in^2	1.35 in^2	2.4 in^2
Impact Area	0.50 in^2	1.35 in^2	2.4 in^2
$\left[\frac{MissileWeight}{ImpactArea}\right]$	0.5 psi	4.1 psi	6.25 psi
Velocity(1)	260 ft/sec	100 ft/sec	55 ft/sec

NOTES:

1. For the calculational procedures, see Appendix 3.5A

Table 3.5-5 Deleted by Amendment 71; See Section 10.2.3.1

Table 3.5-6 Tabulated Calculation of the Probability of Event H - The Receipt of Unacceptable Damage

Event	NUCLEAR PLANT TURBINES						STEAM PLANT TURBINES					
	Rated Speed Missiles				Overspeed		Rated Speed Missiles				Overspeed	
	250 fps + 10%		350 fps + 10%		550 fps + 10%		310 fps + 10%		500 fps + 10%		865 fps + 10%	
	Center	End	Center	End	Center	End	Center	End	Center	End	Center	End
A	$7X10^{-5}$	$7X10^{-5}$	$7X10^{-5}$	$7X10^{-5}$	$7X10^{-5}$	$7X10^{-5}$	$1X10^{-4}$	$1X10^{-4}$	$1X10^{-4}$	$1X10^{-4}$	$1X10^{-4}$	$1X10^{-4}$
B	0.4	0.4	0.4	0.4	0.2	0.2	0.4	0.4	0.4	0.4	0.2	0.2
C	0.7	0.7	0.7	0.7	1.0	1.0	0.7	0.7	0.7	0.7	1.0	1.0
D	0.9	0.1	0.9	0.1	0.9	0.1	0.9	0.1	0.9	0.1	0.9	0.1
E	-	0.5	-	0.5	-	0.5	-	0.5	-	0.5	-	0.5
F	$6.72X10^{-3}$	$7.89X10^{-3}$	$3.42X10^{-3}$	$2.81X10^{-3}$	$7.67X10^{-4}$	$8.79X10^{-4}$	0	$2.91X10^{-5}$	0	$8.77X10^{-4}$	$3.32X10^{-6}$	$2.23X10^{-4}$
G	0.5	0.5	1.0	1.0	1.0	1.0	1.0	1.0	1.0	1.0	1.0	1.0
Subtotal	$5.93x10^{-8}$	$3.86x10^{-9}$	$6.04x10^{-8}$	$2.75x10^{-9}$	$9.66x10^{-9}$	$6.15x10^{-10}$	0	$4.07x10^{-11}$	0	$1.23x10^{-9}$	$5.98x10^{-11}$	$2.23x10^{-10}$
Subtotal			$1.37x10^{-7}$							$1.49x10^{-9}$		
H	(2 1800 rpm Turbines)x($1.37x10^{-7}$)+(4 3600 rpm Turbines)x($1.49x10^{-9}$) = $2.79x10^{-7}$ events per year											

Table 3.5-7 Tornado Missile Spectrum A for Category I Structures(1)

Missile(2)	Description	Design Velocity Exterior System ft/s (mi/h)	Design Velocity Roof Wall ft/s (mi/h)
A1	Wood plank, 2 in. x 4 in. x 12-ft long, weight 27 lbs	440 (300)	--
A2	Cross tie, 7 in. x 9 in. x 8.5 ft long, weight 186 lbs	440 (300)	--
A3	Automobile, weight 4000 lbs, up to 25 ft above grade at structure	73 (50)	--
A4	Steel pipe, 2-in. diameter, 7-ft long, weight 26 lbs	147 (100)	--
A5	Steel rod, 1-in. diameter x 3-ft long, weight 8 lbs	210 (143)	168 (115)
A6	Utility pole, 13.5 in. diameter x 35-ft long, weight 1490 lbs, up to 30 feet above grade	200 (136)	160 (109)

Notes:

(1) See Section 3.5.1.4.

(2) Missiles A1 through A4 were considered in original design. Missiles A5 and A6 were based on the structural adequacy of as-designed structures.

Table 3.5-8 Tornado Missile Spectrum B Diesel Generator Building Equipment Doors(1)

Missile	Description	Design Velocity ft/sec (mph)
B1	100-lb missile with 4-in. diameter for impact area	147 (100)
B2	10-ft length of 2 in. standard pipe impact endwise (weight = 36.5 lbs.)	147 (100)
B3	10-ft length of 1/2-in. standard pipe impacting endwise (weight 8.5 lbs.)	147 (100)
B4	Wood plank, 2 in. x 4 in. x 12 ft long, weight 27 lbs.	440 (300)
B5	Cross tie, 7 in. x 9 in. x 8.5 ft long, weight 186 lbs.	440 (300)
B6	Steel pipe, 2-in. diameter by 7 ft long, weight 26 lbs.	147 (100)

Missiles B1, B2, and B3 were considered in the design of the equipment doors. Additional protection is provided for missiles B4, B5, and B6.

Note:

1. See Section 3.5.1.4.

Table 3.5-9 Tornado Missile Spectrum C for Category I Structures(1)

		Design Velocity Exterior Wall ft/s (mi/h)	Design Velocity Roof System ft/s (mi/h)
C1	Wood plank, 4 in. x 12 in. x 12 ft., weight 200 lbs.	368 (251)	294 (200)
C2	Steel pipe, 3-in. diameter, 10-ft long, weight 78 lbs	268 (183)	215 (147)
C3	Steel rod, 1-in. diameter, 3-ft long, weight 8 lbs	259 (177)	207 (141)
C4	Steel pipe, 6-in. diameter, 15-ft long, weight 285 lbs	230 (157)	184 (125)
C5	Steel pipe, 12-in. diameter, 15-ft long, weight 743 lbs	205 (140)	165 (112)
C6	Utility Pole, 13-1/2-in. diameter, 35-ft long, weight 1490 lbs.	241 (164)	205 (140)
C7	Automobile, frontal area 20 ft^2, 4000 lbs, up to 30 ft above grade	100 (70)	80 (56)

NOTE:

(1) See Section 3.5.1.4.

Table 3.5-10 Tabulation of the Probability of Receipt of Unacceptable Damage - Per Critical Structure

	Rated Speed Missiles				Overspeed Missiles	
	250fps + 10%		350 fps + 10%		550 fps + 10%	
Structure	Center	End	Center	End	Center	End
Reactor Building #1	2.28×10^{-8}	1.35×10^{-9}	3.13×10^{-8}	7.04×10^{-10}	2.87×10^{-9}	7.59×10^{-11}
Reactor Building #2	2.38×10^{-8}	1.49×10^{-9}	2.88×10^{-8}	6.35×10^{-10}	2.67×10^{-9}	5.78×10^{-11}
Control Room	2.59×10^{-8}	5.61×10^{-10}	8.82×10^{-9}	2.04×10^{-10}	2.55×10^{-9}	5.85×10^{-11}
Spent Fuel Pool	6.17×10^{-10}	1.88×10^{-10}	3.34×10^{-9}	7.72×10^{-11}	3.18×10^{-10}	7.46×10^{-12}
Valve Room 1A	2.36×10^{9}	6.96×10^{-11}	1.95×10^{-9}	4.78×10^{-11}	1.96×10^{-10}	4.40×10^{-12}
Valve Room 1B	4.22×10^{-10}	1.48×10^{-10}	2.90×10^{-9}	6.70×10^{-11}	2.72×10^{-10}	7.11×10^{-12}
Valve Room 2A	2.61×10^{-9}	5.72×10^{-11}	1.50×10^{-9}	3.14×10^{-11}	1.32×10^{-10}	3.25×10^{-12}
Valve Room 2B	5.72×10^{-10}	1.72×10^{-10}	3.88×10^{-9}	9.86×10^{-11}	2.55×10^{-10}	5.85×10^{-12}
ERCW Conduit Run	3.95×10^{-8}	3.58×10^{-9}	3.56×10^{-8}	3.57×10^{-9}	9.02×10^{-9}	1.00×10^{-9}
Diesel Generator Bldg	0	1.14×10^{-10}	2.55×10^{-9}	7.03×10^{-11}	1.03×10^{-9}	1.15×10^{-11}
TOTALS	1.19×10^{-7}	7.73×10^{-9}	1.21×10^{-7}	5.51×10^{-9}	1.93×10^{-8}	1.23×10^{-9}

Table 3.5-11 Deleted by Amendment 95

Table 3.5-12 Deleted by Amendment 95

Table 3.5-13 Deleted by Amenedment 95

Table 3.5-14 Outdoor Safety-Related Features(1) (Including Air Intakes and Exhausts) (Sheet 1 of 2)

Feature	FSAR Figure	Tornado Protection
1. ERCW pumps, traveling screens, and ancillary features located on the deck of the intake pumping station.	3.8.4-50	Steel grillage roof system consisting of a series of wide flange beams (W21 x 49) spaced 9 inches on center and rotated 45 degrees. Walls of 15 inch reinforced concrete.
2. ERCW Standpipes	2.5-225	Reinforced concrete enclosure (15-inch clear cover)
3. ERCW Overflow Box	3.8.4-46a	Reinforced concrete cover (2-feet thickness)
4. ERCW yard piping	9.2-40	Buried with one of the following minimum covers: 18 inches of concrete, 7 feet of crushed stone, or 11 feet of earthfill.
5. RWST	3.8.4-35	3-1/2 feet high concrete wall with earth backfill surrounding tank to preserve necessary volume of water
6. Pipe tunnels	3.8.4-35	Buried reinforced concrete cover (2-feet thickness)
7. Diesel generator ventilation intakes and exhausts	3.8.4-26	Reinforced concrete canopy (1-foot thickness)
8. Diesel generator engine combustion air exhausts	3.8.4-26	Reinforced concrete curb, 3 feet high and 18 inches thick around the exhaust
9. Diesel generator electric board room air intakes (4 total)	3.8.4-26	Steel canopy with barrier protection (steel frame with 1 inch cover plate).
10. 480V transformer room, ventilation intakes and exhausts	1.2-1	Suspended steel grating (2-1/2 inch x 3/8 inch main bars and 1/2 in diameter connecting bars).
11. Vital battery room exhausts	1.2-1	Same as for Item 10 except the fifth Vital Battery Room is same as Item 9.
12. 480V board room condensing unit air intake and exhaust (train A)	1.2-1	Reinforced concrete roof parapet (a minimum of 12 inches thick and 3 feet high)
13. 480V board room condensing unit air intake (train B)	1.2-1	Reinforced concrete canopy (18 inches thick)

NOTE:

(1) This tabulation consists of these outdoor features which are safety-related in the event of a tornado and as defined in Branch Technical Position ASB3-2 of the Standard Review Plan for Section 3.5.1-4 "Missiles Generated by Natural Phenomena."

Table 3.5-14 Outdoor Safety-Related Features[1] (Including Air Intakes and Exhausts) (Sheet 2 of 2)

Feature	FSAR Figure	Tornado Protection
14. 480V board room condensing unit air exhaust (train B)	1.2-1	On roof of mechanical equipment rooms.
15. Class 1E duct banks and manholes	3.8.4-37	Buried with concrete protection (9 inch clear concrete cover for conduits; 12 inches total concrete thickness of manholes).
16. Fuel oil 7-day tank vent line (portion above roof)	3.8.4-26	Encased in reinforced concrete.
17. IPS El. 728' terrace roof openings which expose Cat. I electrical cable trays	3.8.4-50	Steel grating 4'-10" x 4' -10" Borden type C Style 18 size C A36, structural steel shroud (3/4" thickness), 18" thick precast concrete panels.
18. DGB & ADGB fuel oil 1-day tank vent lines (portions protruding from exterior walls)	3.8.4-27	Steel plate shrouds (2" cover plate thickness)
19. Vacuum Relief Ducts in Aux. Bldg. Roof, Units 1&2	1.2-1	Steel plate canopy (1/2" thickness) over existing duct opening
20. Diesel Generator Bldg. roof access hatches (two)	3.8.4-26	Structural steel plate shrouds under DGB roof. Steel plate thickness varies from 1/4" to 1/2", as required
21. Emergency Pressurizer Fan opening on Cont. Bldg. roof, column lines C10-C11 & n-q	1.2-1	Steel plate canopy (1/2" min. thick.) over opening
22. Toilet and locker room exhaust fan opening on Cont. Bldg. roof, column lines C2-C3 & n-q	1.2-1	Steel plate canopy (1/2" min. thick.) over opening
23. Battery room exhaust vent in Cont. Bldg. roof, column lines C3-C4 & n-q	1.2-1	Steel plate canopy (1/2" min. thick.) over opening

Table 3.5-15 Deleted by Amendment 95

Table 3.5-16 Deleted by Amendment 95

Table 3.5-17 Tornado Missile Spectrum D(1)

Missile Description	Weight (lb)	Cross Section	Length (ft)	Horizontal Velocity(2) (ft/sec)
Wooden Plank	115	4" x 12"	12	272
Steel Rod	9	1" dia	3	167
6" Schedule 40 Pipe	287	6" dia	15	171
12" Schedule 40 Pipe	743	12" dia	15	154
Utility Pole	1124	13-1/2" dia	35	180
Automobile	4000	6.5' x 4.3'	16.5	194

Notes:

(1) For Additional Diesel Generator Building and additional Category I structures after July 1979

(2) Vertical velocities of 70% of the postulated horizontal velocities are acceptable except for the 1 inch steel rod which shall have a vertical velocity equal to its horizontal velocity (167 ft/sec). These missiles are capable of striking in any horizontal or downward direction and at all elevations.

Table 3.5-18 Minimum Wall and Roof Thickness Requirements To Resist the Effects of Tornado Missile Impact(1)

Tornado Intensity Region	28-Day Concrete Strength (PSI)	Wall Thickness (Inches)	Roof Thickness (Inches)
Region I	3000	23	18
	4000	20	16
	5000	18	14

Note:

(1) For the Additional Diesel Generator Building and additional Category I structures added after July 1979.

THIS PAGE INTENTIONALLY BLANK

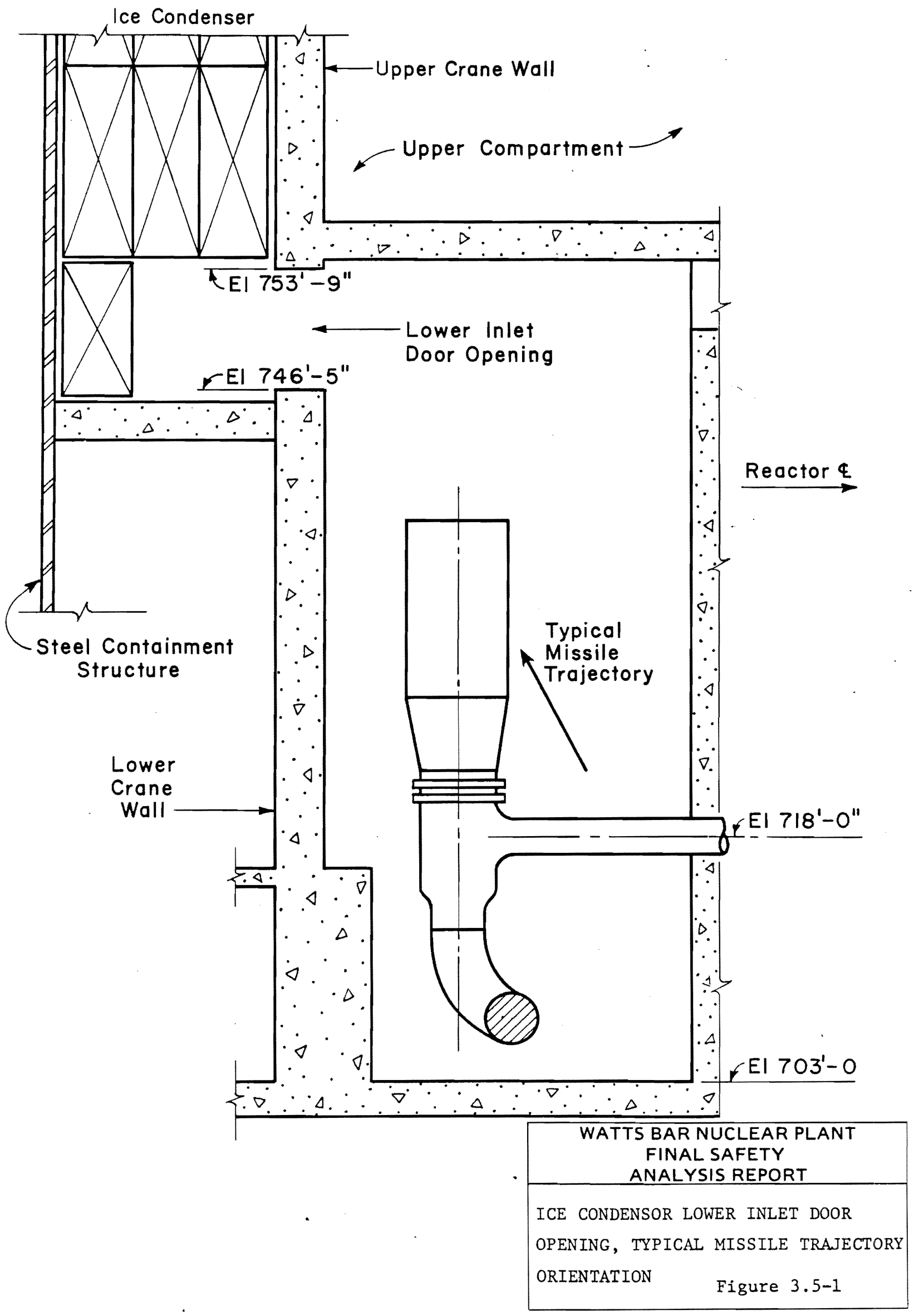

Figure 3.5-1 Ice Condenser Lower Inlet Door Opening, Typical Missile Trajectory Orientation

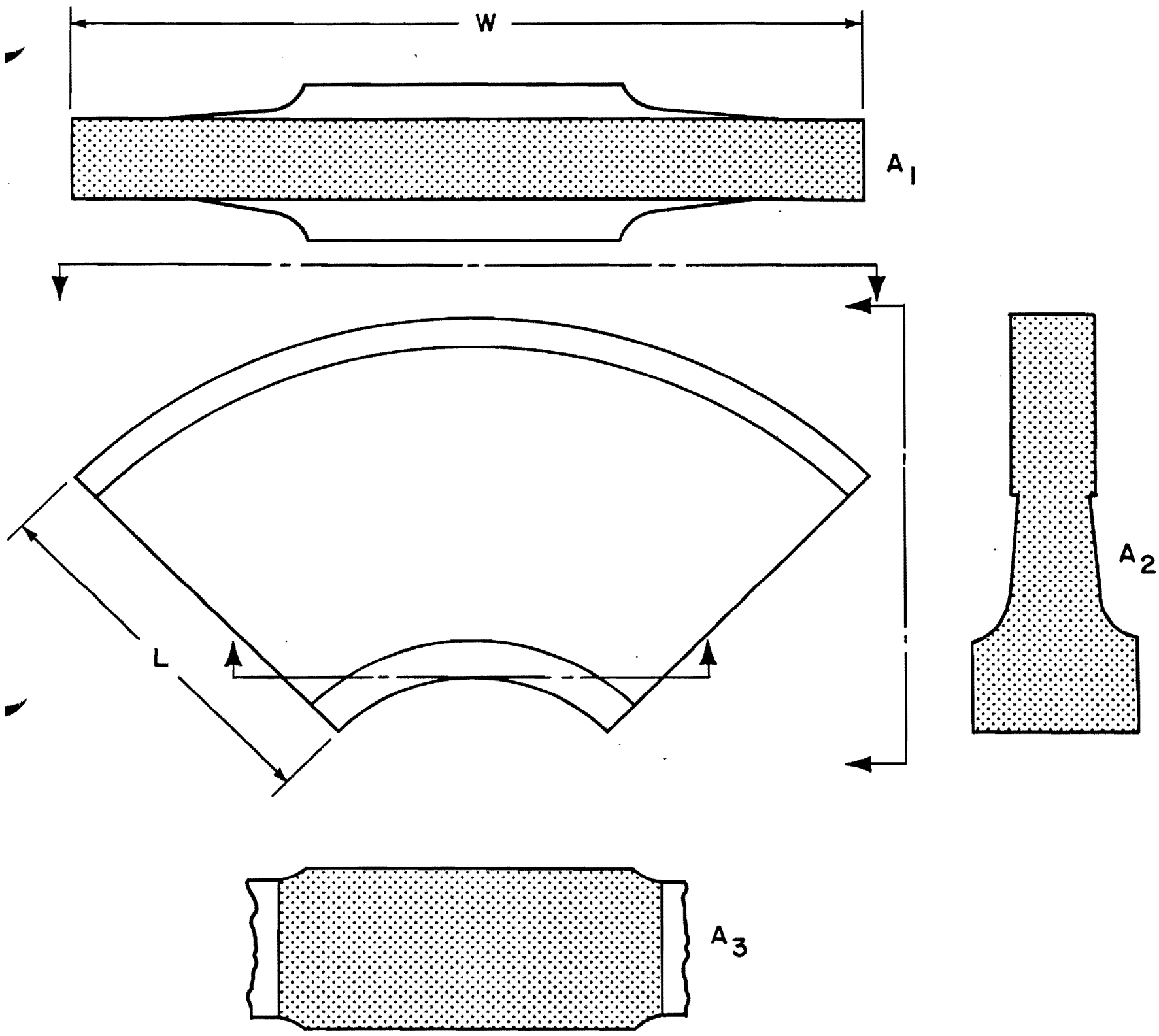

WATTS BAR NUCLEAR PLANT
FINAL SAFETY
ANALYSIS REPORT

PHYSICAL DIMENSIONS OF
IMPORTANT POTENTIAL
TURBINE MISSILES

Figure 3.5-2

Figure 3.5-2 Physical Dimensions of Important Potential Turbine Missiles

Security-Related Information - Withheld Under 10CFR2.390

Figure 3.5-3 Turbine Generator Locations

Security-Related Information - Withheld Under 10CFR2.390

Figure 3.5-4 Watts Bar Nuclear Plant Layout

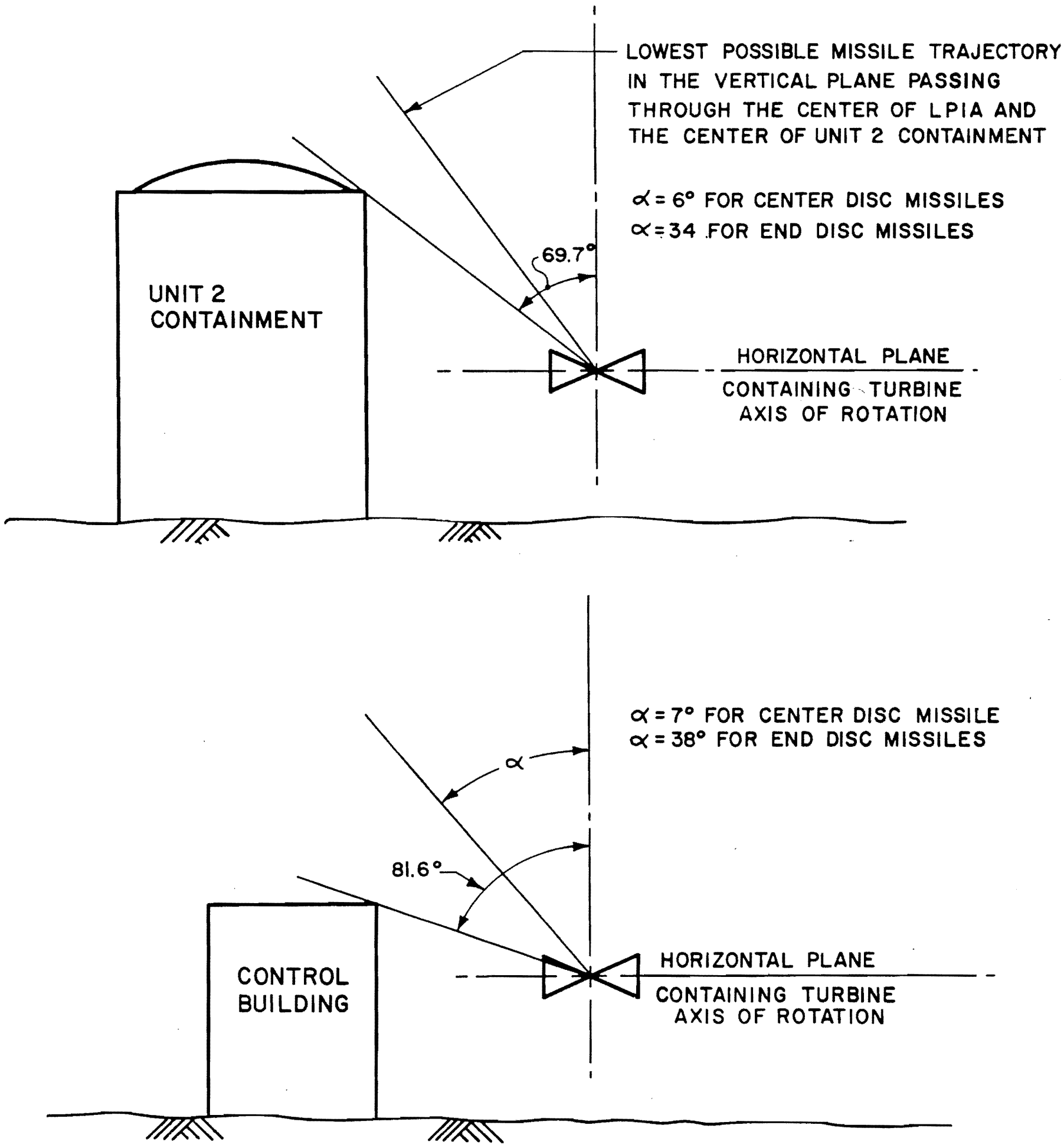

FIG.

WATTS BAR NUCLEAR PLANT
FINAL SAFETY
ANALYSIS REPORT

CROSS-SECTIONAL ANALYSIS OF SUSCEPTIBILITY OF CRITICAL COMPONENTS TO UPWARD TURBINE MISSILE TRAJECTORIES

Figure 3.5-5

Figure 3.5-5 Cross-Sectional Analysis of Susceptibility of Critical Components to Upward Turbine Missile Trajectories

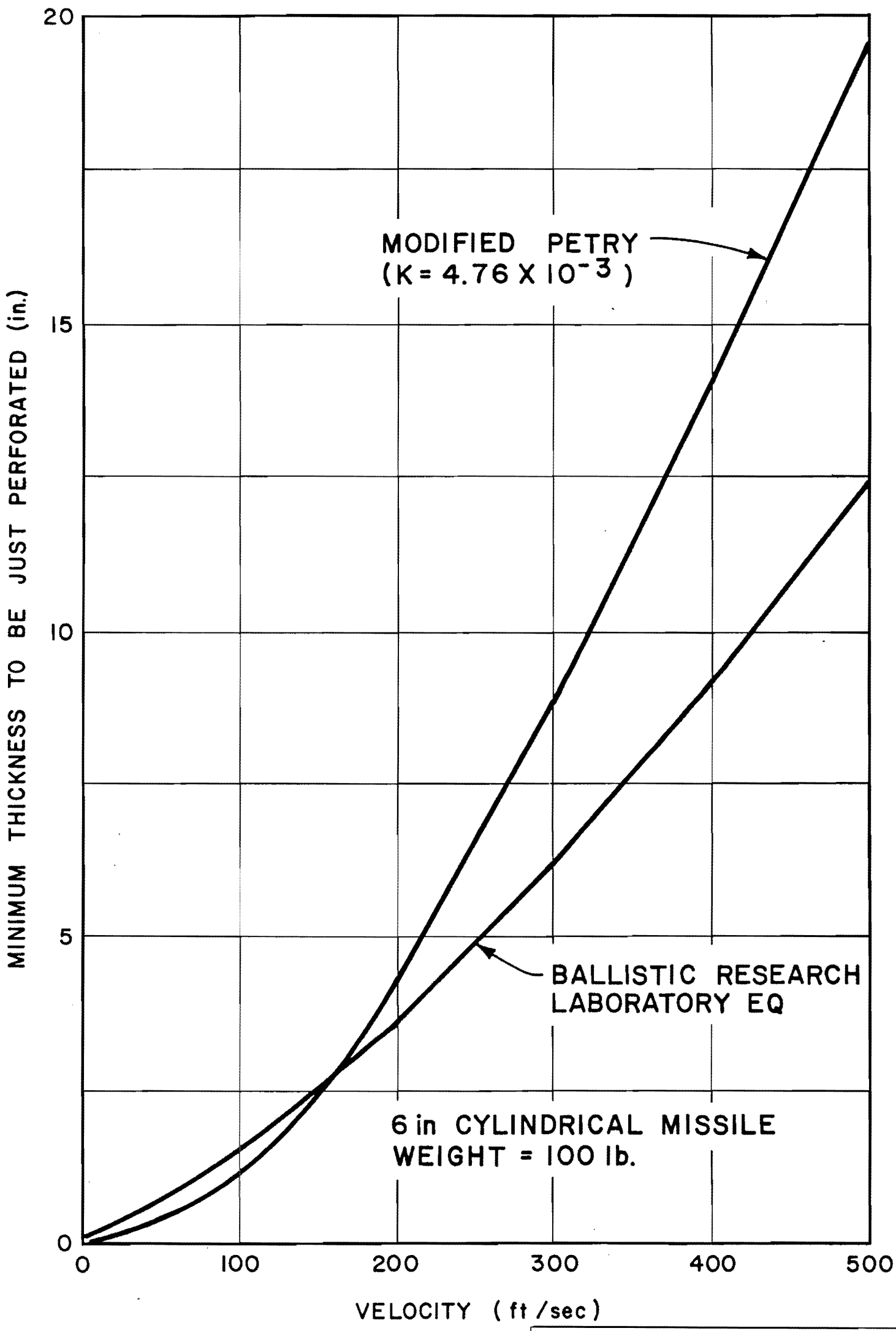

WATTS BAR NUCLEAR PLANT
FINAL SAFETY
ANALYSIS REPORT

COMPARISON OF MISSILE FORMULAS

Figure 3.5-6

Figure 3.5-6 Comparison of Missile Formulas (6-in Cylindrical Missile)

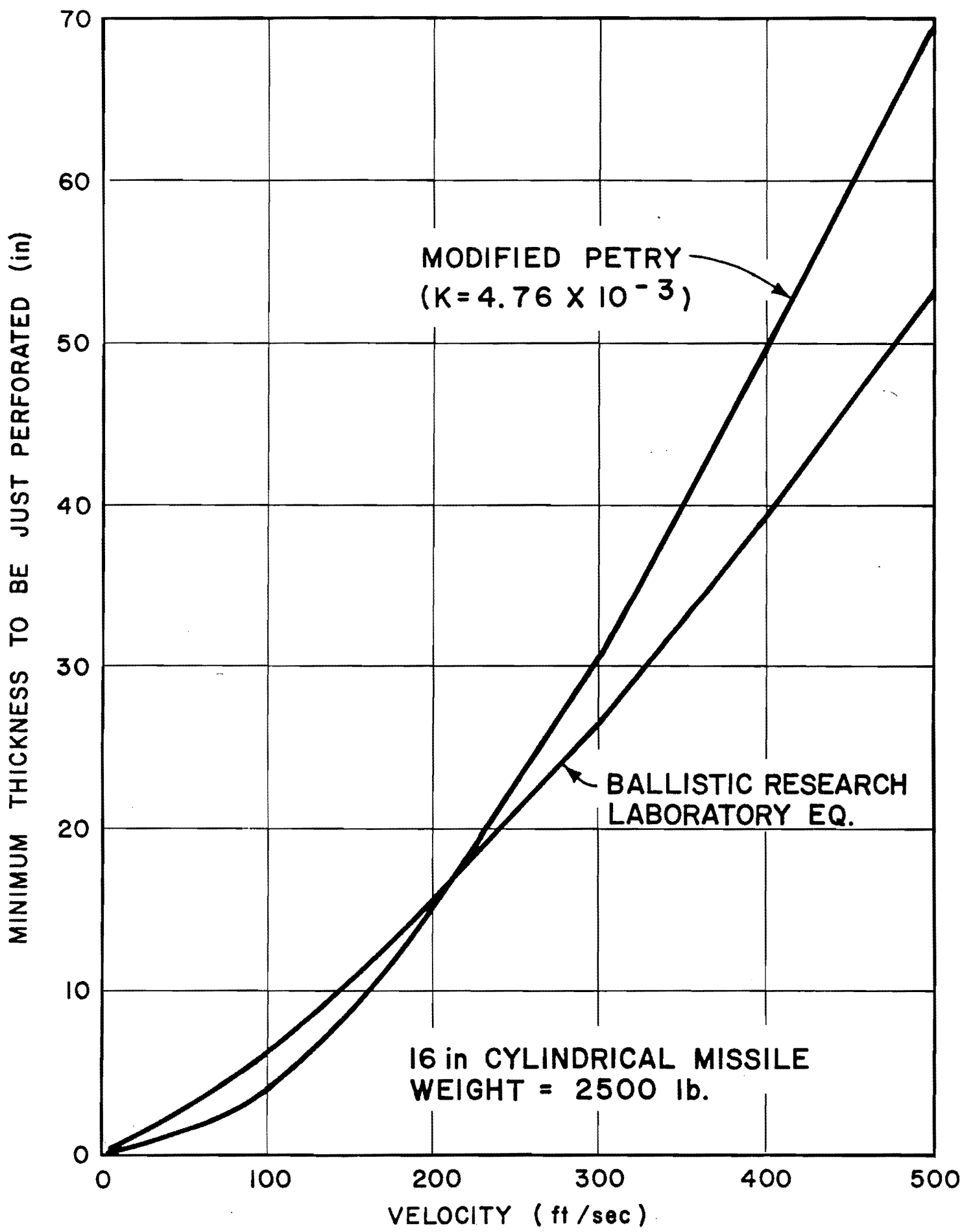

WATTS BAR NUCLEAR PLANT
FINAL SAFETY
ANALYSIS REPORT

COMPARISON OF MISSILE FORMULAS

Figure 3.5-7

Figure 3.5-7 Comparison of Missile Formulas (l6-in Cylindrical Missile)

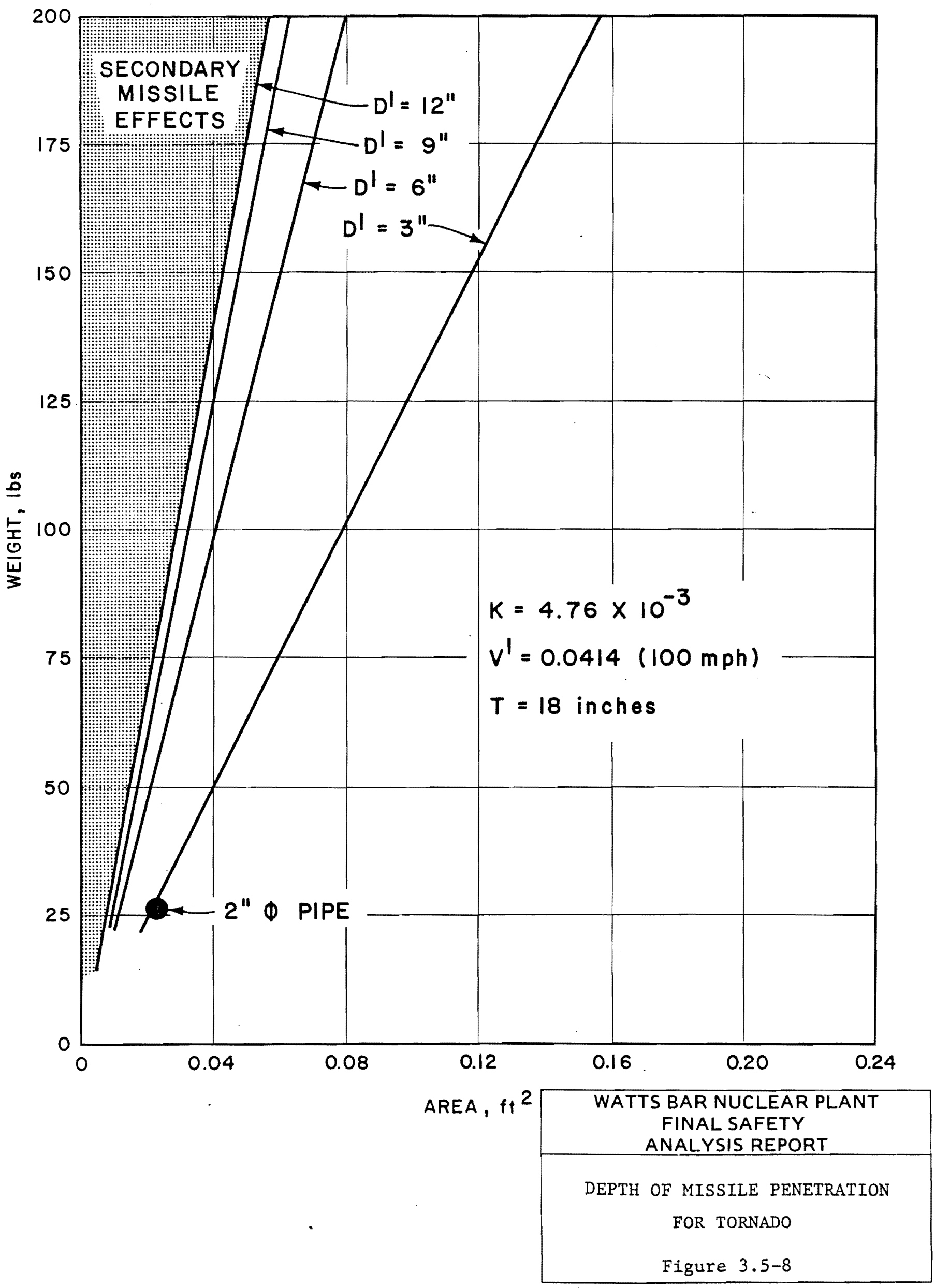

Figure 3.5-8 Depth of Missile Penetration for Tornado (2-in Diameter Pipe)

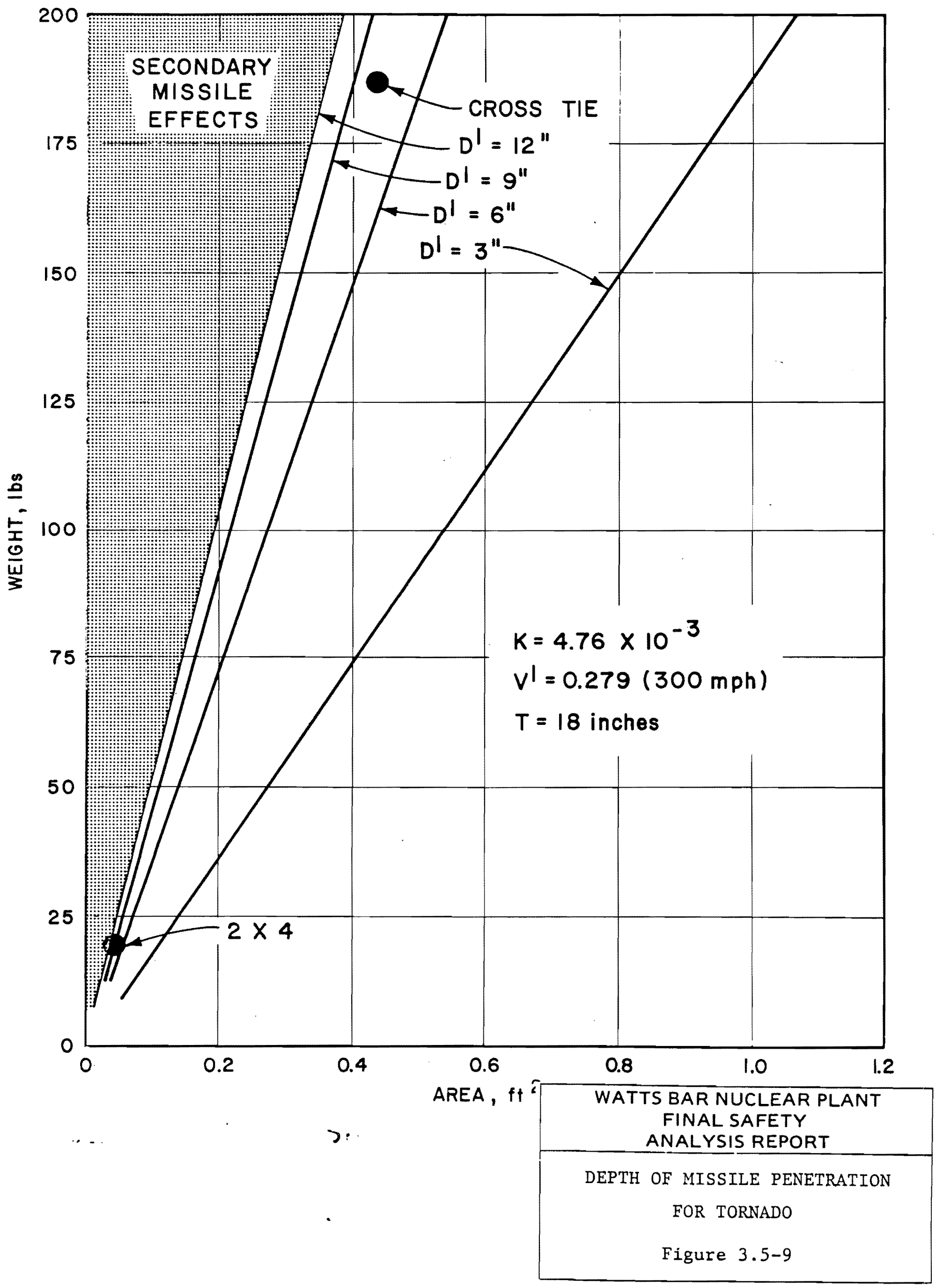

Figure 3.5-9 Depth of Missile Penetration for Tornado (2X4)

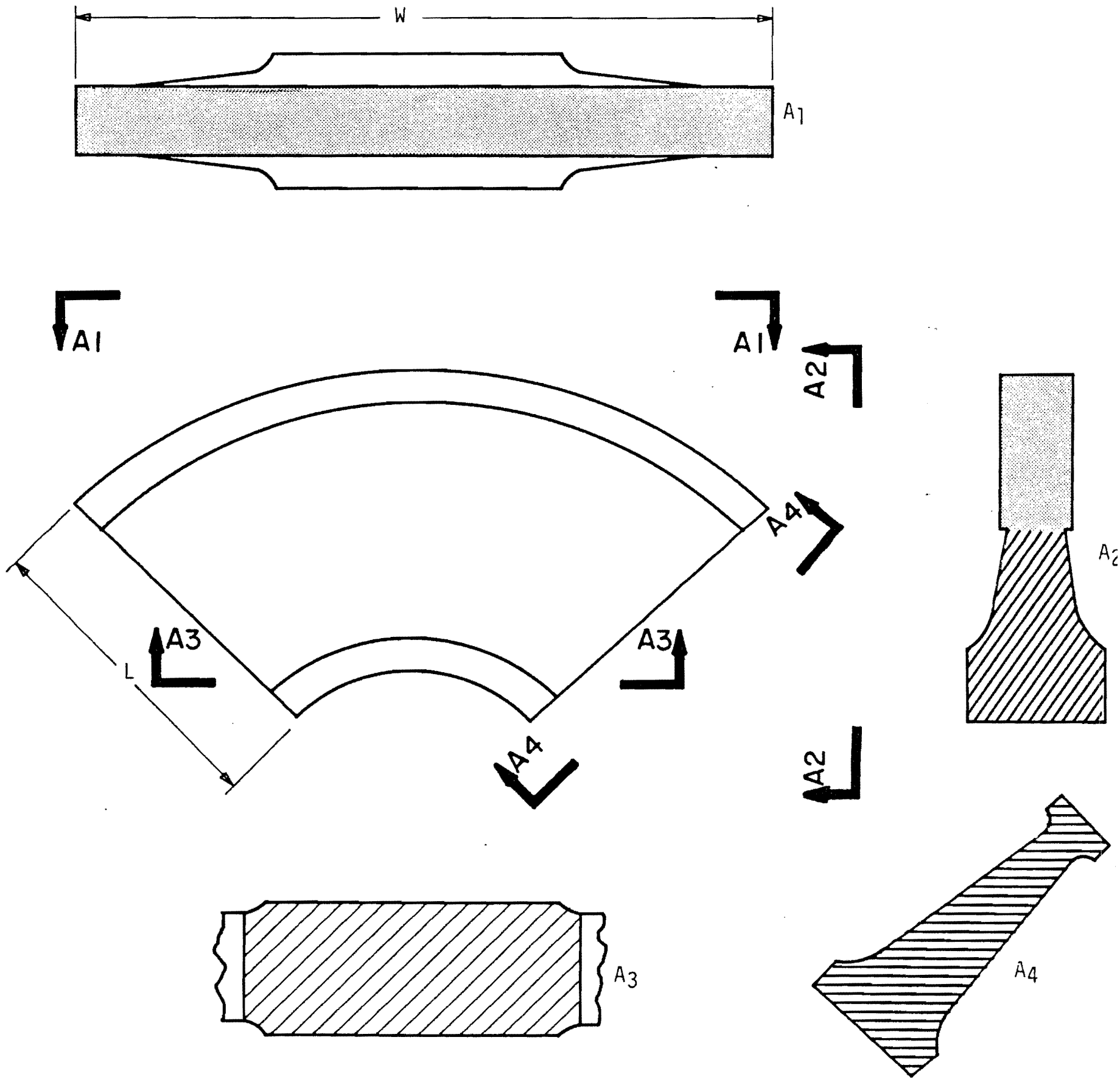

WATTS BAR NUCLEAR PLANT
FINAL SAFETY
ANALYSIS REPORT

LP DISC MISSILES
FIGURE 3.5-10

Added by Amendment 51

Figure 3.5-10 LP Disc Missiles

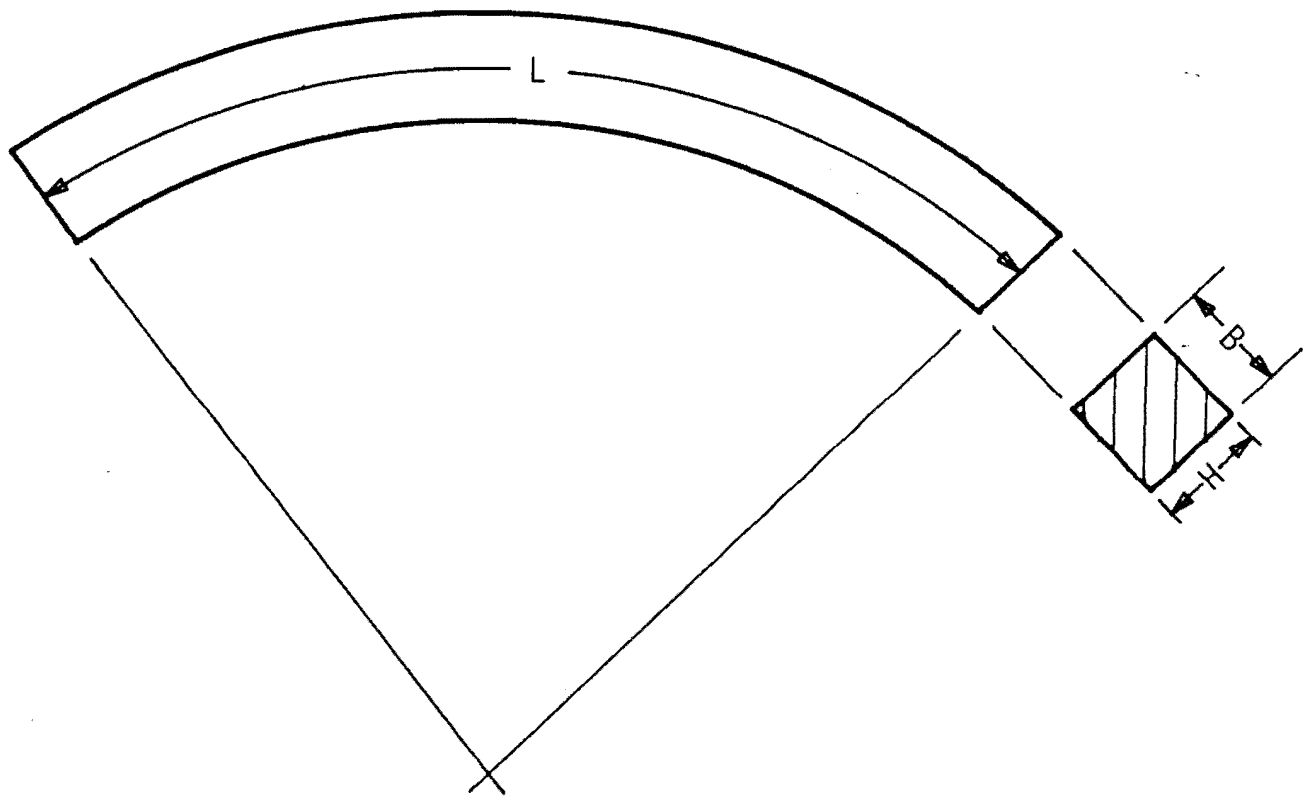

Added by Amendment 51

WATTS BAR NUCLEAR PLANT
FINAL SAFETY
ANALYSIS REPORT

LP CYLINDER & BLADE RING FRAGMENTS
FIGURE 3.5-11

Figure 3.5-11 LP Cylinder & Blade Ring Fragments

THIS PAGE INTENTIONALLY BLANK

3.5A ESTIMATES OF VELOCITIES OF JET PROPELLED MISSILES

A. Jet Stream Relations

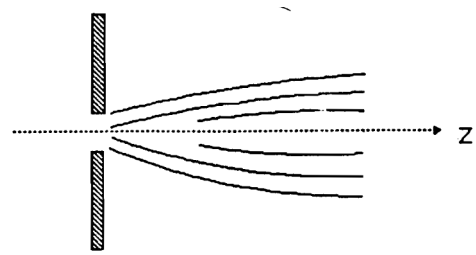

For steady flow, assuming bulk properties across a cross section of a "free jet," the following conservation relations hold between the orifice and any downstream position.

Continuity in axial direction:

(1) $$\dot{W} = G_o A_o = GA = PV_z A$$

From conservation of axial momentum:

(2) $$T_j = P_o A_o + \frac{\dot{W}}{g} V_o = PA + \frac{\dot{W}}{g} V_z = \left(P_o + \frac{G_o V_o}{g}\right) A_o$$

Where,

W = mass discharge rate

A = area of jet stream

V_z = axial fluid velocity

P = fluid pressure

G = mass flux rate

ρ = fluid density

T_j = total jet thrust

$$G_o = 0.61\sqrt{2\rho g(P_r - P_o)}$$

$$V_o = \sqrt{\frac{2g(P_r - P_o)}{\rho}}$$

P_o = orifice pressure

P_r = reservoir pressure

Subscript o refers to orifice conditions.

These relations indicate that mass flow rate and axial jet force are constant at any downstream plane even though pressure, area, density, and fluid velocity change from one downstream position to another.

B. Missile Acceleration

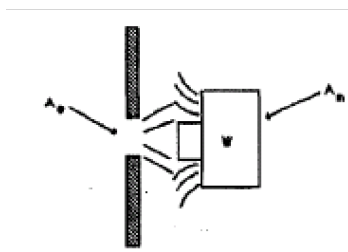

Assuming that fluid impinging on missile imparts all of its axial momentum to the missile and splashes radially out of the stream, the force balance on the missile is:

(3) $$\frac{W}{g}\frac{dV_m}{dt} = f(z)\left[P + \frac{G}{g}(V_z - V_m)\right]A3$$

Where,

f(z) = represents the fraction of the jet impinging

W = missile weight

V_m = missile velocity

For no expansion of jet, f(z) = 1, A = A_o ($A_m \geq A_o$ is assumed)

C. Effect on Jet Radial Expansion

For the general case, the missile would not receive the full thrust of the jet throughout its travel, and an estimate of f(z) with downstream distance is needed. For a first approximation, it is assumed that the jet expands with a constant half angle and that the thrust fraction, f(z), impinging on the missile is:

$$f(z) = 1 \qquad \text{for } A_m \geq A(z)$$
$$f(z) = A_m / A(z) \qquad \text{for } A_m \leq A(z)$$

Where,

$$A(z) = \pi(R_o + Z \tan \beta)^2$$

THIS PAGE INTENTIONALLY BLANK