SPECIFICATIONS
AND
DOCUMENTS

KEWAUNEE NUCLEAR POWER PLANT
UNIT 1

WISCONSIN PUBLIC SERVICE CORPORATION
GREEN BAY, WISCONSIN

KEWAUNEE NUCLEAR POWER PLANT SAFETY AND RELIEF VALVES PIPING QUALIFICATION REPORT

B&V PROJECT 9653

Issued: June 28, 1982

I hereby certify that this report was prepared by me or under my direct supervision and that I am a duly Registered Professional Engineer under the laws of the State of Wisconsin.

Charles J. Ross

Date June 28, 1982 Reg. No. E-21225

WISCONSIN
CHARLES J.
ROSS
E-21225
LEAWOOD,
KS.
PROFESSIONAL ENGINEER

BLACK & VEATCH
Consulting Engineers
Kansas City, Missouri

1982

8207150510 820712
PDR ADOCK 05000305
P PDR

KEWAUNEE NUCLEAR POWER PLANT

KEWAUNEE NUCLEAR POWER PLANT SAFETY AND RELIEF VALVES PIPING QUALIFICATION REPORT

JULY 1, 1982

Prepared by

BLACK & VEATCH Consulting Engineers

For

Wisconsin Public Service Corporation
Green Bay, Wisconsin

TABLE OF CONTENTS

		Page
1.0	SUMMARY	1-1
2.0	INTRODUCTION	2-1
2.1	NRC REQUIREMENTS	2-1
2.2	EPRI S/RV TEST PROGRAM AND OBJECTIVES	2-2
2.3	REPORT OBJECTIVES	2-2
3.0	KEWAUNEE S/R VALVE AND PIPING LAYOUT	3-1
3.1	DESCRIPTION OF THE KEWAUNEE SAFETY AND RELIEF VALVES	3-1
3.2	DESCRIPTION OF THE KEWAUNEE S/RV PIPING LAYOUT	3-7
4.0	EPRI S/RV TEST FACILITIES	4-1
4.1	COMBUSTION ENGINEERING TEST FACILITY	4-1
5.0	CONDITIONS WHICH MAY CAUSE KEWAUNEE SAFETY AND RELIEF VALVE ACTUATION	5-1
6.0	QUALIFICATION OF THE PROCEDURE TO DETERMINE PIPING LOADS DUE TO THE OPENING OF A SAFETY OR RELIEF VALVE	6-1
6.1	EPRI RELAP5 QUALIFICATION	6-2
6.2	QUALIFYING TEST AND TEST RESULTS	6-11
6.3	RELAP5/REPIPE MODEL AND DESCRIPTIONS	6-13
6.4	COMPARISONS BETWEEN CALCULATED AND TEST RESULTS	6-22
7.0	DETERMINATION OF THE KEWAUNEE PLANT SPECIFIC PIPING LOADS	7-1
7.1	RELAP5 PLANT SPECIFIC MODELS FOR DETERMINATION OF PIPING LOADS	7-1
7.2	KEWAUNEE PLANT SPECIFIC DISCHARGE PIPING LOAD RESULTS	7-24
8.0	KEWAUNEE PIPING STRESS ANALYSIS	8-1
8.1	KEWAUNEE ADLPIPE MODEL	8-1
8.2	DETERMINATION OF STRESS ALLOWABLES	8-7
8.3	PRELIMINARY EVALUATION OF KEWAUNEE PIPING STRESS AND RESULTS	8-11
8.4	UPSTREAM PRESSURE OSCILLATIONS	8-15
9.0	RECOMMENDATIONS AND ACTION PLAN	9-1
10.0	REFERENCES	10-1

TABLE OF CONTENTS (Continued)

		Page
APPENDIX A	RELAP5 CODE DESCRIPTION	
APPENDIX B	REPIPE PROGRAM DESCRIPTION	
APPENDIX C	TAC2D PROGRAM DESCRIPTION	
APPENDIX D	ADLPIPE PROGRAM DESCRIPTION	
APPENDIX E	EXPERIMENTAL RESULTS FOR CE TEST 908	

LIST OF TABLES

TABLE 3-1	PRESSURIZER AND PRESSURIZER RELIEF TANK DESIGN DATA FOR THE KEWAUNEE NUCLEAR POWER PLANT	3-4
TABLE 3-2	KEWAUNEE SAFETY VALVE PLANT SPECIFIC INFORMATION	3-5
TABLE 3-3	KEWAUNEE RELIEF VALVE PLANT SPECIFIC INFORMATION	3-9
TABLE 3-4	DESCRIPTION OF KEWAUNEE S/RV PIPING	3-10
TABLE 3-5	PIPELINE LIST PIPING SPECIFICATION--PIPE CODE A, B UPSTREAM PIPING - KEWAUNEE FSAR CLASS I	3-13
TABLE 3-6	PIPELINE LIST PIPING SPECIFICATION--PIPE CODE C, D, E, F DOWNSTREAM PIPING--KEWAUNEE FSAR CLASS II	3-14
TABLE 4-1	CE TEST FACILITY DESIGN PARAMETERS	4-4
TABLE 4-2	PARTIAL LIST OF CE TEST INSTRUMENTATION	4-12
TABLE 4-3	DESCRIPTION OF COMBUSTION ENGINEERING TEST FACILITY PIPING	4-18
TABLE 5-1	KEWAUNEE FSAR EVENTS WHICH CAUSED RELIEF OR SAFETY ACTUATION	5-2
TABLE 6-1	CE TESTS USED BY ITI FOR EVALUATION OF RELAP5/MOD1	6-3
TABLE 6-2	DOWNSTREAM PIPING DATA--CE TEST 908--WATER DOWNSTREAM	6-15
TABLE 6-3	CE 908 LOOP SEAL TEMPERATURE DISTRIBUTION AS CALCULATED WITH TAC2D	6-20
TABLE 7-1	RELAP5 INPUT PARAMETERS FOR THE KEWAUNEE TWO-SAFETY VALVE SIMULATION	7-3
TABLE 7-2	RELAP5 INPUT PARAMETERS FOR THE KEWAUNEE ONE-SAFETY VALVE SIMULATION	7-9

TABLE OF CONTENTS (Continued)

LIST OF TABLES (Continued)

		Page
TABLE 7-3	RELAP5 INPUT PARAMETERS FOR THE KEWAUNEE ONE-SAFETY AND ONE-RELIEF VALVE SIMULATION	7-14
TABLE 7-4	DOWNSTREAM PIPING DATA--KEWAUNEE--DOUBLE PORV	7-19
TABLE 7-5	TAC2D PARAMETERS USED IN THE KEWAUNEE LOOP SEAL TEMPERATURE PROFILE DETERMINATION	7-23
TABLE 7-6	KEWAUNEE LOOP SEAL TEMPERATURE DISTRIBUTION	7-26
TABLE 8-1	KEWAUNEE PIPING RESTRAINTS DESIGN SPECIFICATIONS	8-2
TABLE 8-2	ITT GRINNELL RESTRAINT DRAWINGS	8-3
TABLE 8-3	KEWAUNEE LUMP MASS DESCRIPTION FOR ADLPIPE CALCULATIONS	8-5
TABLE 8-4	LOAD COMBINATIONS FOR FSAR CLASS I PIPING AND COMPONENTS	8-8
TABLE 8-5	LOAD COMBINATIONS FOR FSAR CLASS II PIPING AND COMPONENTS	8-9
TABLE 8-6	DEFINITIONS AND LOAD ABBREVIATIONS	8-10
TABLE 8-7	FORCING FUNCTION LUMPED MASS APPLICATION POINTS AND DIRECTION COSINES	8-12

LIST OF FIGURES

FIGURE 3-1	KEWAUNEE S/RV DISCHARGE PIPING ISOMETRIC	3-2
FIGURE 3-2	KEWAUNEE NUCLEAR POWER PLANT SAFETY/RELIEF VALVES AND DISCHARGE PIPING LAYOUT	3-3
FIGURE 3-3	CROSS-SECTION VIEW OF KEWAUNEE CROSBY SAFETY VALVE	3-6
FIGURE 3-4	MASONEILAN RELIEF VALVE	3-11
FIGURE 4-1	SCHEMATIC OF THE CE TEST FACILITY	4-2
FIGURE 4-2	ISOMETRIC OF THE TEST FACILITY PIPING	4-3
FIGURE 4-3	DIAGRAM OF THE CROSBY 6M6 SAFETY VALVE	4-6
FIGURE 4-4	SPOOLPIECE DIAGRAM FOR THE CROSBY 6M6	4-7
FIGURE 4-5	DIAGRAM OF THE UPPER TEST STAND ASSEMBLY	4-8

TABLE OF CONTENTS (Continued)

LIST OF FIGURES (Continued)

		Page
FIGURE 4-6	DIAGRAM OF THE SECOND ELBOW PIPE SUPPORT ASSEMBLY	4-9
FIGURE 4-7	DIAGRAM OF THE THIRD ELBOW PIPE SUPPORT ASSEMBLY	4-10
FIGURE 4-8	CE TEST INSTRUMENTATION	4-14
FIGURE 4-9	EPRI/CE SAFETY VALVE TEST DATA ACQUISITION SYSTEM	4-16
FIGURE 4-10	ISOMETRIC OF CE TEST PIPING SAFETY VALVE WITH LOOP SEAL	4-19
FIGURE 4-11	DISCHARGE PIPING SIZE COMPARISON BETWEEN KEWAUNEE AND CE TEST FACILITY	4-21
FIGURE 6-1	COMPARISON PLOT OF ITI RELAP5/MOD1-CALCULATED PRESSURE WITH PT08 EXPERIMENTAL DATA, TEST 908	6-5
FIGURE 6-2	COMPARISON PLOT OF ITI RELAP5/MOD1-CALCULATED PRESSURE WITH PT09 EXPERIMENTAL DATA, TEST 908	6-5
FIGURE 6-3	COMPARISON PLOT OF ITI RELAP5/MOD1-CALCULATED PRESSURE WITH PT10 EXPERIMENTAL DATA, TEST 908	6-6
FIGURE 6-4	COMPARISON PLOT OF ITI RELAP5/MOD1-CALCULATED PRESSURE WITH PT11 EXPERIMENTAL DATA, TEST 908	6-6
FIGURE 6-5	COMPARISON PLOT OF ITI RELAP5/MOD1-CALCULATED SEGMENT 1 FORCE WITH EXPERIMENTAL DATA, TEST 908	6-7
FIGURE 6-6	COMPARISON PLOT OF ITI/CE DAGS-CALCULATED SEGMENT 1 FORCE WITH EXPERIMENTAL DATA, TEST 908	6-7
FIGURE 6-7	COMPARISON PLOT OF ITI RELAP5/MOD1-CALCULATED SEGMENT 2 FORCE WITH EXPERIMENTAL DATA, TEST 908	6-8
FIGURE 6-8	COMPARISON PLOT OF ITI/CE DAGS-CALCULATED SEGMENT 2 FORCE WITH EXPERIMENTAL DATA, TEST 908	6-8
FIGURE 6-9	COMPARISON PLOT OF ITI RELAP5/MOD1-CALCULATED SEGMENT 3 FORCE WITH EXPERIMENTAL DATA, TEST 908	6-9
FIGURE 6-10	COMPARISON PLOT OF ITI/CE DAGS-CALCULATED SEGMENT 3 FORCE WITH EXPERIMENTAL DATA, TEST 908	6-9

TABLE OF CONTENTS (Continued)

LIST OF FIGURES (Continued)

		Page
FIGURE 6-11	RELAP5 NODALIZATION OF THE CE TEST 908	6-14
FIGURE 6-12	TEST 908 LOOP SEAL TEMPERATURE PROFILE	6-18
FIGURE 6-13	CE 908 LOOP SEAL TAC2D MESH	6-19
FIGURE 6-14	CE 908 LOOP SEAL WATER TEMPERATURE DISTRIBUTION USING TAC2D	6-21
FIGURE 6-15	RELAP5/REPIPE CALCULATED RESULTS-WATER IN LOOP SEAL WHEN VALVE POPS-VERSUS CE TEST 908 RESULTS OF W32 AND W33	6-23
FIGURE 6-16	RELAP5/REPIPE CALCULATED RESULTS-WATER IN DOWNSTREAM PIPING WHEN VALVE POPS-VERSUS CE TEST 908 RESULTS OF W32 AND W33	6-24
FIGURE 7-1	RELAP5 NODALIZATION FOR KEWAUNEE TWO-SAFETY VALVE SIMULATION	7-2
FIGURE 7-2	RELAP5 NODALIZATION FOR KEWAUNEE ONE-SAFETY VALVE SIMULATION	7-8
FIGURE 7-3	RELAP5 NODALIZATION FOR KEWAUNEE ONE-SAFETY - ONE-RELIEF VALVE SIMULATION	7-13
FIGURE 7-4	RELAP5 NODALIZATION FOR KEWAUNEE TWO-RELIEF VALVE SIMULATION	7-18
FIGURE 7-5	KEWAUNEE LOOP SEAL TEMPERATURE DISTRIBUTION	7-25
FIGURE 7-6	KEWAUNEE LOOP SEAL WATER TEMPERATURE VARIATION	7-27
FIGURE 7-7	KEWAUNEE LOOP SEAL WATER TEMPERATURE VARIATION	7-28
FIGURE 8-1	KEWAUNEE S/RV DISCHARGE PIPING ADLPIPE LUMP MASS SKETCH	8-4

1.0 SUMMARY

This report was written to provide a status report of the Kewaunee safety and relief valve piping analysis and to provide an action plan and schedule for completion of the Kewaunee plant specific S/RV piping analysis. This report provides information which partially meets the requirements of NUREG 0737, Item II.D.1.A for safety and relief valve (S/RV) piping and supports qualification. The S/RV qualification is presented in another report entitled "Kewaunee Power Plant Safety and Relief Valve Qualification Report."

Part of the overpressure protection system (OPPS) for the Kewaunee Power Station contains two Crosby $6M_16$ safety valves with loop seals, two Masoneilan relief valves and associated piping which provide pressure relief to the Kewaunee-Westinghouse nuclear steam supply system (NSSS). Overpressure events occur in the primary system which may exceed the set points of first the relief valves and then the safety valves. The activation of these valves causes large forces to develop in the discharge piping which produces stresses in safety/relief valve piping network.

The U.S. Nuclear Regulatory Commission (NRC) in their report NUREG 0578 (Reference 1), "TMI-2 Lessons Learned Task Force Status Report and Short Term Recommendations," dated July 1979, recommended in Section 2.1.2 that utilities operating and constructing nuclear power plants develop a program for performance tests of power operated relief valves and self-activated safety valves which are used in the reactor primary coolant system. The requirement of NUREG 0578 was later incorporated into the "NRC Task Action Plan," NUREG 0660 (Reference 3) and it was further clarified in NUREG 0737, Item II.D.1.A (References 3 and 4). At the request of utilities with PWR's, EPRI developed and implemented a test program for power operated relief valves and safety valves. As part of this test program, load measurements were taken during the actuation of the tested valve at various downstream piping locations of one of the test facilities.

The EPRI testing program consisted of four major parts.

(1) Justification that the valves tested in the EPRI test program were applicable to the valves used in PWR OPPS.

(2) Justification that the test conditions used in the EPRI test program were applicable to the expected PWR operating and accident conditions.

(3) The relief and safety valve test results and test description.

(4) Verification and application of RELAP5/MOD1 for calculation of safety and relief valve discharge piping hydrodynamic loads.

This report deals specifically with the piping loads created by the opening of the Kewaunee safety and/or relief valves due to an overpressure event in the NSSS. As part of safety valve testing, the testing at the Combustion Engineering (CE) test also provided measured load data on the downstream piping which was used to qualify calculational procedures used to determine Kewaunee plant specific piping loads due to the actuation of a safety and/or relief valve(s).

Basically this report presents the descriptions of the Kewaunee plant specific S/RV and piping configuration and the description of the EPRI safety valve test facility (contained in Sections 3.0 and 4.0). Qualification of the calculation and method to determine the thermal/hydraulic loads on the Kewaunee S/RV piping is presented in Section 5.0. Plant specific Kewaunee S/RV discharge piping load calculations is presented in Section 6.0. The method used to determine piping stresses due to S/RV actuation and appropriate stress allowables are presented in Section 7.0. An action plan to complete the S/RV discharge piping evaluation is presented in Section 8.

The computer codes RELAP5/REPIPE were used to simulate various S/RV transients which produced thermal-hydraulic loads on the discharge piping. These loads were used as input to the stress code, ADLPIPE, to determine the piping stresses on the Kewaunee S/RV piping network. These stresses were then compared to the Kewaunee FSAR code allowables to determine the adequacy of the Kewaunee piping and piping restraint layout. These evaluations concluded that the stress allowables were exceeded by a safety valve actuation transient.

It was recommended that further evaluations be made to determine the most plausible piping, valve, and restraint design which will produce acceptable piping stresses (see Section 9.0 for specific information).

2.0 INTRODUCTION

An overpressure protection system (OPPS) is provided on each pressurized water reactor (PWR) to prevent over-pressurization of the primary coolant boundary. Part of the OPPS typically includes two or three spring loaded safety valves and one to three power operated relief valves, each in a separate piping system that extends from the pressurizer steam dome to a pressure suppression (relief) tank. The OPPS design details vary considerably among PWR power plants. Some contain a small water volume in a U-tube piping configuration preceding the safety valve which acts as a loop seal. A large number of different safety and relief valves are utilized in various system designs, and the discharge piping configurations vary from plant to plant.

Under all normal operating conditions and the majority of postulated transients, the safety or relief valves, if actuated, will pass high quality steam (after loop seal discharge, if present). The discharge of the water slug (if loop seal is present) followed by expanding steam in the S/RV discharge piping will cause large thermal-hydraulic forces to develop in the discharge piping.

2.1 NRC REQUIREMENTS

2.1.1 Performance Testing and Boiling Water Reactor and Pressurized-Water Reactor Relief and Safety Valves (Item II.D.1.A)

"Licensees and applicants are to determine the expected valve operating conditions through the use of analyses of accidents and anticipated operational occurrences referenced in Regulatory Guide 1.70, Revision 2. The single failures applied to these analyses are to be chosen so that the dynamic forces on the safety and relief valves are maximized. Test pressures shall be the highest predicted by conventional safety analysis procedures. Reactor coolant system relief and safety valve qualifications are to include qualification piping and supports, as well as the valves themselves."

2.1.1.1 Performance Testing of S/RV's. The following information should be provided in report form to the NRC.

(1) Evidence supported by test of S/RV functionability for expected operating and accident (non-ATWS) conditions must be provided to the NRC. The testing should demonstrate that the valves will open and reclose under the expected flow conditions.

Test data including criteria for success and failure of valves tested must be provided for NRC staff review and evaluation. These test data should include data that would permit plant-specific evaluation of discharge piping and supports that are directly tested. (These reports will be provided by EPRI.)

(2) Since it is not planned to test all valves on all plants, each licensee must submit to the NRC a correlation or other evidence to substantiate that the valves tested in the EPRI generic test program demonstrates the functionability of as-installed primary S/RV's. This correlation must show that the test conditions used are equivalent to expected operating and accident conditions as prescribed in the FSAR. The effect of as-built S/RV discharge piping on valve operability must also be accounted for, if it is different from the generic test loop piping.

2.2 EPRI S/RV TEST PROGRAM AND OBJECTIVES

The primary objective of the EPRI PWR Safety and Relief Valve Test Program was to provide full scale test data confirming the functionability of primary system power operated relief valves and safety valves for expected operating and accident conditions. The second objective of the program was to obtain sufficient piping thermal hydraulic load data to permit confirmation of models which may be utilized in plant unique analysis of safety and relief valve discharge piping systems.

2.3 REPORT OBJECTIVES

The primary objectives of this report are as follows.

(1) Present qualification of calculational procedure which was used to determine plant specific loads for the Kewaunee S/RV discharge piping.

(2) To determine the piping stresses created by the actuation of a safety and/or relief at the Kewaunee power plant.

(3) To present a plan which will define a S/RV discharge piping design able to keep piping stresses created by the actuation of a Kewaunee safety and/or relief valve under code allowable stresses.

3.0 KEWAUNEE S/R VALVE AND PIPING LAYOUT

Part of the OPPS for the Kewaunee-Westinghouse Nuclear Steam Supply System (NSSS) includes two spring loaded Crosby safety valves and two power operated Masoneilan relief valves. Each valve is in a separate piping system that extends from the pressurizer steam dome through the valves. Downstream of the valves, the discharge piping forms a common pipe for all valves and is discharged into the pressure relief tank. The Crosby safety valves upstream piping contain a small water volume (approximately four and a half gallons) in a U-tube piping configuration preceding the safety valves which acts as a loop seal. The water loop seals provide a protective barrier against corrosive gases and minimizes steam leakage.

The Kewaunee S/RV piping is shown in Figures 3-1 and 3-2. Figure 3-1 is an isometric of the as-built piping layout from the pressurizer to the pressure relief tank. Figure 3-1 contains all dimensions including valve designations and piping support designations. Figure 3-2 presents the line drawing of the S/RV piping layout. Other detailed design information is presented on Table 3-1.

3.1 DESCRIPTION OF THE KEWAUNEE SAFETY AND RELIEF VALVES

3.1.1 Kewaunee Safety Valves

The Kewaunee OPPS contains two safety valves which are designated PR-3A and PR-3B and are shown in Figures 3-1 and 3-2. These valves are set to open in the event of an overpressure transient in the primary system which exceeds 2,500 psia.

The pressurizer safety valves were designed using the ASME Boiler and Pressure Vessel Code Section III Nuclear Vessels Winter 1968 as designated in the Kewaunee FSAR (Reference 5).

Detailed information concerning the safety valves are given in Table 3-2 and References 6, 7, and 8.

The Kewaunee Safety Valve is of the Crosby Style HB-BP-86. A plant specific illustration of the safety valve is presented in Figure 3-3.

3.1.2 Kewaunee Power Operated Relief Valves

The Kewaunee OPPS contains two Masoneilan power operated relief valves (PORV) which are designated PR-2A and PR-2B and are shown in Figures 3-1

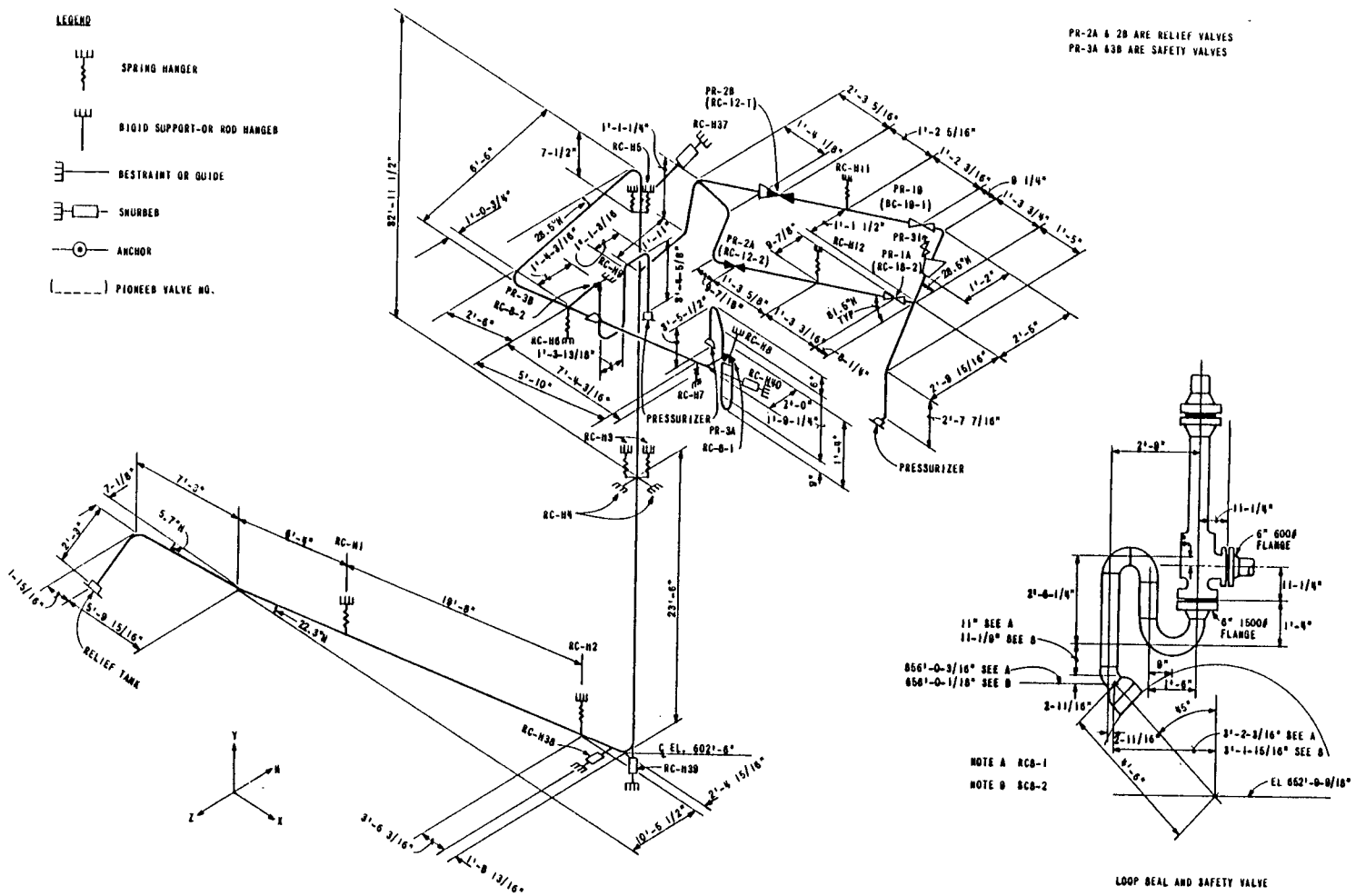

*See Reference 9

FIGURE 3-1
KEWAUNEE C/PV DISCHARGE PIPING GEOMETRY*

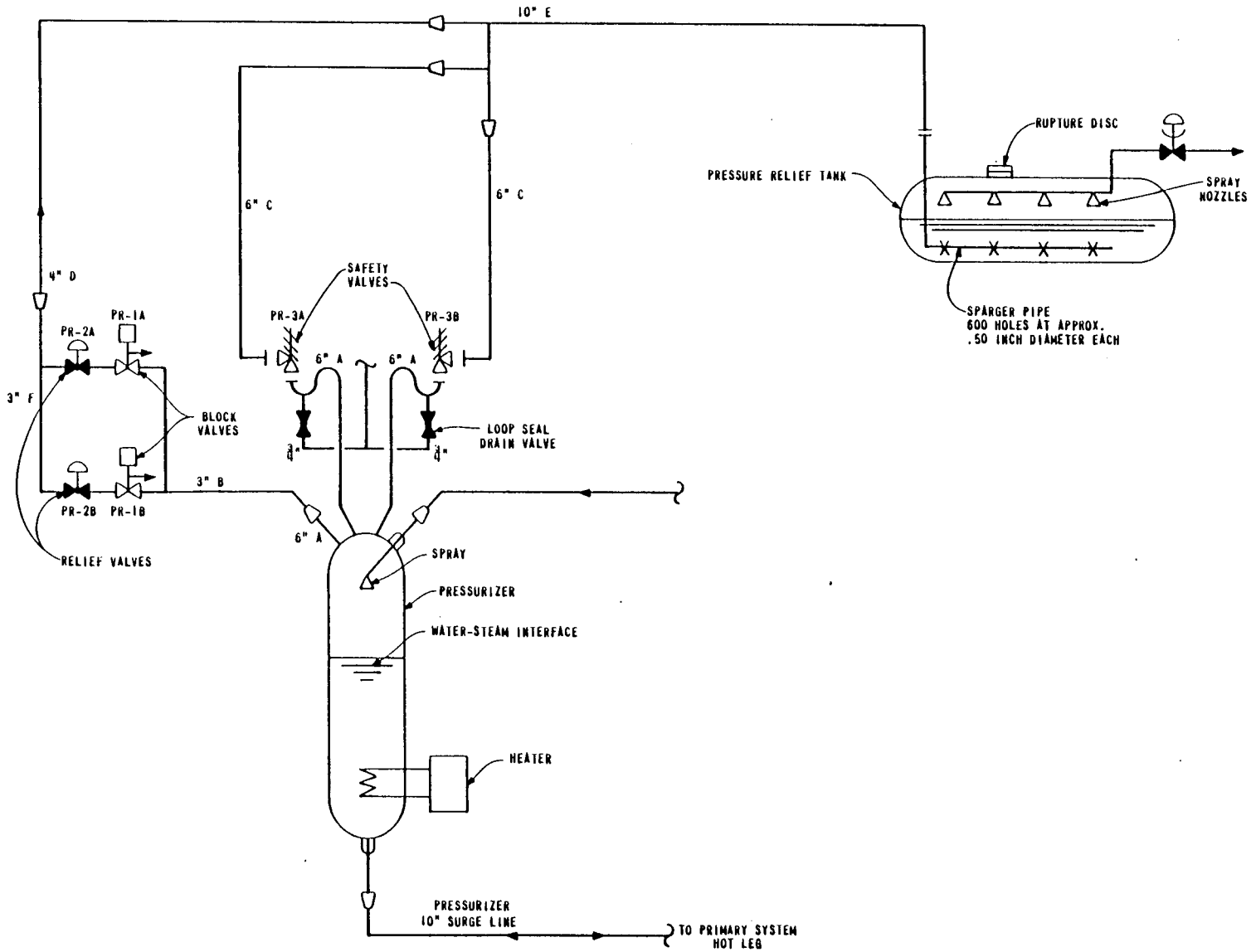

*See Reference 10

FIGURE 3-2
KEWAUNEE NUCLEAR POWER PLANT SAFETY/RELIEF VALVES AND DISCHARGE PIPING LAYOUT*

TABLE 3-1. PRESSURIZER AND PRESSURIZER RELIEF TANK DESIGN DATA FOR THE KEWAUNEE NUCLEAR POWER PLANT

Pressurizer	
Design/Operating Pressure, psig	2,485/2,235
Hydrostatic Test Pressure (cold), psig	3,107
Design/Operating Temperature, F	680/653
Water Volume, Full Power, ft^3*	600
Steam Volume, Full Power, ft^3	400
Surge Line Nozzle Diameter, in./Pipe Schedule	14/Sch 140
Shell ID, in./Minimum Shell Thickness, in.	84/4.1
Minimum Clad Thickness, in.	0.188
Electric Heaters Capacity, kW (total)	1,000
Heatup Rate of Pressurizer Using Heaters Only, F/h	55 (Approximately)
Power Relief Valves	
Number	2
Set Pressure (open), psig	2,335
Capacity, lb/h saturated steam/valve	179,000
Safety Valves	
Number	2
Set Pressure, psig	2,485
Capacity (ASME Rated Flow) lb/h/valve	345,000
Pressurizer Relief Tank	
Design Pressure, psig	100
Rupture Disc Release Pressure, psig	85
Design Temperature, F	340
Normal Water Temperature, F	120
Total Volume, ft^3	800
Rupture Disc Relief Capacity, lb/h	6.5×10^5

*60 per cent of net internal volume (maximum calculated power).

TABLE 3-2. KEWAUNEE SAFETY VALVE PLANT SPECIFIC INFORMATION

Safety Valve Information	
Number of Valves	2
Manufacturer	Crosby
Factory Order	901642
Assembly No.	52137
Drawing No.	H-52137
I.D. No.	6-RVS8L5B
Size	
Inlet	6" Schedule 160
Orifice	M_1; Area = 0.0207 ft^2
Outlet	6" Schedule 40S
Seating Materials	Stellite
Disc Holder and Construction	347 SST with Stellite Lands and Disc Bushing
Rated Flow	345,000 lb/h
Set Pressure	2,485 psig
Overpressure	3 Per Cent
Blowdown	5 Per Cent
Inlet Flange Rating	1,500 lb
Discharge Flange Rating	600 lb
Stamped Ring Settings	
Guide Ring	-96
Nozzle Ring	-18
Isometric Designation*	PR-3A, 3B

*See Figures 3-1 and 3-2 for location.

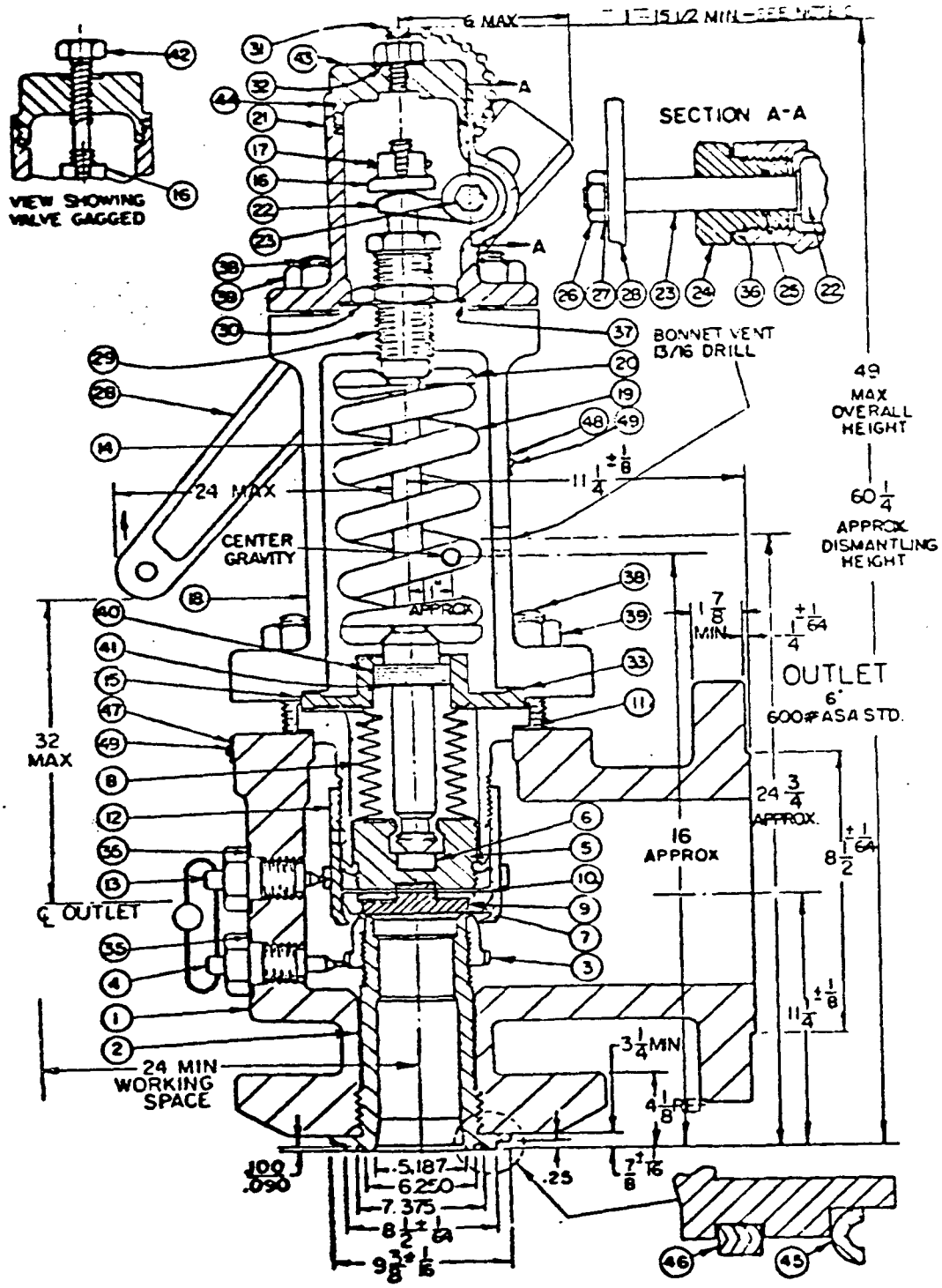

FIGURE 3-3
CROSS-SECTION VIEW OF KEWAUNEE CROSBY*
SAFETY VALVE

*Taken from Reference 11.

and 3-2. These valves are set to open in the event of an overpressure transient in the primary system which exceeds 2,335 psig.

The Kewaunee Masoneilan relief valves are top guided single seat globe valves with pneumatic actuators. An illustration of the Masoneilan relief valve is presented in Figure 3-4. During an overpressure event of the primary system, the valve plug is lifted off the seat by pneumatically loading the actuator.

Detailed information concerning the Kewaunee Masoneilan relief valve is presented in Table 3-3 and is given in References 6, 12, and 8.

3.2 DESCRIPTION OF THE KEWAUNEE S/RV PIPING LAYOUT

The details of the Kewaunee discharge piping is shown in Figures 3-1 and 3-2. A detailed description of the piping layout is presented in Table 3-4. Design specifications for the piping are presented for the upstream and downstream piping in Tables 3-5 and 3-6, respectively.

The upstream piping which includes the loop seals for the safety valves consist of 6-inch Schedule 160 piping approximately 10 feet from the pressurizer to the safety valve. The loop seals contain 4.6 gallons of 120 F water each. The loop seal is approximately 5 feet in center line length from the steam-water interface to the inlet of the valve. A temperature gradient of 73 F per inch was calculated to occur in the first 6 inches from the steam water interface into the water of the loop seal. A constant temperature of 120 F, i.e., assumed ambient temperature, is reached at approximately one foot from the steam-water interface.

Heat loss from the loop seal piping is primarily due to natural convection and radiation from the outside surface of the loop seal piping with the majority of the heat loss occurring in the first 6 inches of piping. TAC2D, a two-dimensional heat transfer computer code was used to determine the loop seal temperature distribution. More details concerning the TAC2D analyses are given in Appendix C.

The discharge piping from the safety valve PR-3A is 6-inch Schedule 40S piping. The distance from the safety valve to the center of the first elbow is approximately 1.8 feet. There is approximately 7.2 feet from the first elbow for safety valve PR-3A to the 10-inch by 10-inch by 6-inch tee where the 6-inch Schedule 40S discharge piping for safety valve PR-3B

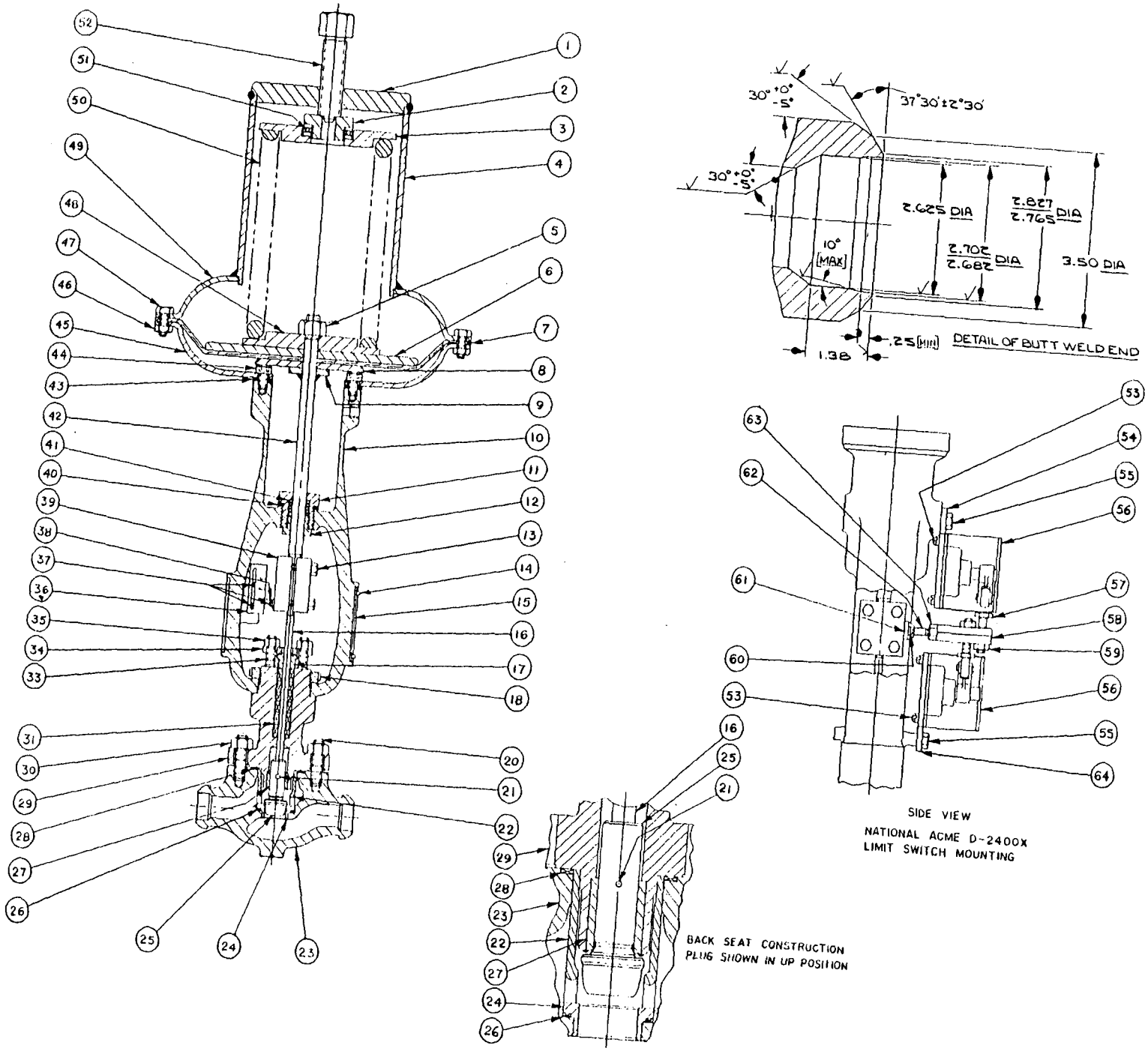

*Taken from Reference 6

FIGURE 3-4
MASONEILAN RELIEF VALVE*

TABLE 3-3. KEWAUNEE RELIEF VALVE PLANT SPECIFIC INFORMATION[a]

Relief Valve Information	
Number of Valves	2
Manufacturer	Masoneilan
Type	Globe
Assembly Drawing No.	A-8435
Identification No.	3-IA58RGP
Model No.	38-20721
Size	2"
Steam Flow Capacity Rated	179,000 lb/h
Steam Flow Capacity--Actual[b]	199,000 lb/h
Temperature at Flow	650 F
Set Point Pressure	2,335 psig
Inlet Flange Rating	1,500 lb
Discharge Flange Rating	1,500 lb
Allowable Applied Load[c]	35,600 in.-lb
Opening Pressure[c]	2,477
Closing Pressure[c]	2,216
Air-Operated Valve	
ASCO Solenoid Model No.	831654
Full Stroke	1-1/2"
Isometric Designation[d]	PR-2A; PR-2B

[a]Taken from References 8 and 13.

[b]Tested flow.

[c]Tested values.

[d]See Figures 3-1 and 3-2 for location.

TABLE 3-4. DESCRIPTION OF KEWAUNEE S/RV PIPING

Safety Valve PR-3A and PR-3B loop seal from the pressurizer to the center of the safety valve:

1. The loop seal is 6-inch SCH 160 piping.
2. There is 2.9 feet of vertical pipe from the pressurizer to the first 180 degree bend.
3. The first 180 degree bend has a circumferential length of 2.0 feet.
4. There is 0.8 feet of vertical pipe from the first 180 degree to the second 180 degree bend.
5. The second 180 degree bend has a circumferential length of 2.4 feet.
6. A rigid strut located at the end of the second 180 degree bend provides restraint in plane with the loop seal.
7. The vertical portion of the valve and flange is 0.9 feet long.

Safety valve PR-3A discharge piping from the center of the valve to the 10-inch by 10-inch by 6-inch tee:

1. The discharge piping is 6-inch SCH 40S.
2. The horizontal portion of the valve and flange is 0.9 feet long.
3. There is 0.5 feet of 6-inch horizontal piping from the valve to the first discharge elbow.
4. The first discharge elbow has a circumferential length of 0.8 feet.
5. There is approximately 6.8 feet of 6-inch horizontal piping from the first discharge elbow to the 10-inch by 10-inch by 6-inch tee. A snubber (RC-H40) located near the first discharge elbow provides axial restraint for the above horizontal piping.

Safety valve PR-3B discharge piping from the center of the valve to the 10-inch by 10-inch by 6-inch tee; the tee will be assumed to be the first discharge elbow:

1. The discharge piping is 6-inch SCH 40S.
2. The horizontal portion of the valve and flange is 0.9 feet long.
3. There is approximately 1.1 feet of horizontal piping from the center of the valve to the first discharge elbow. The horizontal piping beyond the first discharge elbow is restrained in the axial direction by snubber RC-H40.

TABLE 3-4 (Continued). DESCRIPTION OF KEWAUNEE S/RV PIPING

Safety valve RP-3A and PR-3B discharge piping from the 10-inch by 10-inch by 6-inch tee to the relief tank:

1. The discharge piping is 10-inch SCH 40S.
2. There is 1.25 feet of horizontal piping from the 10-inch by 10-inch by 6-inch tee to the second discharge elbow. This piping is restrained in the axial direction as previously mentioned.
3. The second discharge elbow has a circumferential length of 1.9 feet.
4. There is 4.0 feet of horizontal piping between the second discharge elbow and the third discharge elbow. This piping is restrained in the axial direction by snubber RC-H37 located just past the third discharge elbow.
5. Third discharge elbow has a circumferential length of 1.9 feet.
6. There is 56.4 feet of vertical piping between the third and the fourth discharge elbow. The piping is restrained in the axial direction by snubber RC-H38 located near the fourth discharge elbow. The vertical run of pipe is also restrained in the horizontal plane by guide RC-H4 at about mid-span.
7. The fourth discharge elbow has a circumferential distance of 1.9 feet.
8. There is 33.3 feet of horizontal piping between the fourth and fifth discharge elbow. This pipe is restrained in the axial direction of snubber RC-H39.
9. The fifth discharge elbow has a circumferential length of 1.9 feet.
10. There is 2.3 feet of piping from the fifth discharge elbow to the blowdown tank.

Pressurizer to 3-inch tee and 3-inch tee to relief valves PR-2A and PR-2B.

1. The piping is 3-inch SCH 160.
2. There is 2.2 feet of vertical pipe from the pressurizer to the first elbow.
3. The first elbow has a circumferential length of 0.6 feet.
4. There is 2.8 feet of horizontal pipe from the first elbow to the 3-inch tee.
5. There is 0.8 feet of horizontal piping from the 3-inch tee to center of block valve PR-1A.
6. There is 2.8 feet of horizontal piping from the block valve PR-1A to the center of relief valve PR-2A.
7. There is 2.4 feet of horizontal pipe from the 3-inch tee to the second elbow.

TABLE 3-4 (Continued). DESCRIPTION OF KEWAUNEE S/RV PIPING

8. The second elbow has a circumferential length of 0.6 feet.

9. There is 0.8 feet of horizontal piping from the second elbow to block valve PR-1B.

10. There is 2.4 feet of horizontal piping from block valve PR-1B to the center of relief valve PR-2B.

Relief valves PR-1B and PR-2B to the 3-inch by 4-inch branch connection. 3-inch by 4-inch branch connection to the 10-inch by 4-inch branch connection on the vertical discharge header.

1. The pipe is 3-inch and 4-inch SCH 40S.

2. There is 0.5 feet of horizontal 3-inch pipe from relief valve PR-2A to the first elbow.

3. The first elbow has a circumferential distance of 0.6 feet.

4. There is 1.3 feet of horizontal 3-inch pipe from the first elbow to the second elbow.

5. The second elbow has a circumferential distance of 0.3 feet.

6. There is 0.7 feet of horizontal 3-inch pipe from the second elbow to the 3-inch by 4-inch branch connection.

7. There is 2.5 feet of horizontal 4-inch pipe from relief valve PR-2B to the 3-inch by 4-inch branch connection.

8. The 0.4 feet of horizontal 4-inch pipe from the 3-inch by 4-inch branch connection to the third elbow.

9. The third elbow has a circumferential distance of 0.7 feet.

10. There is 1.0 feet of vertical 4-inch pipe from the third elbow to the fourth elbow.

11. The fourth elbow is a 45 degree elbow and has a circumferential length of 0.4 feet.

12. There is 1.0 feet of 4-inch pipe, 45 degrees from vertical, between the fourth elbow and the 10-inch by 4-inch branch connection.

TABLE 3-5. PIPELINE LIST PIPING SPECIFICATION--PIPE CODE A, B* UPSTREAM PIPING - KEWAUNEE FSAR CLASS I**

Design Conditions					
Pressure	2,510 psig (Max)	2,485 psig	2,485 psig		
Maximum Temperature	650 F	650 F	680 F		
Material--Stainless Steel of ASTM Specification listed below for each item.					
Pipe					
Size	3/4" to 3"		4"	8" and 10"	6" and 12" to 16"
Construction	Seamless		Seamless	Seamless	Seamless
ASTM Spec	A376 TP 304		A376 TP 316	A376 TP 316	A376 TP 316
Schedule	160		120	140	160
Fittings					
Size	2" and Smaller	3"	4"	8" and 10"	6" and 12" to 16"
Type	Forged	Seamless	Seamless	Seamless	Seamless
Joint	Socket Weld	Butt Weld	Butt Weld	Butt Weld	Butt Weld
ASTM Spec	A182 F 304	A403 WP 304	A403 WP 316	A403 WP 316	A403 WP 316
Rating	6000#	Schedule 160	Schedule 120	Schedule 140	Schedule 160
Flanges					
Size	2" and Smaller	3"	4"	8" and 10"	6" and 12" to 16"
Type	Forged	Forged	Forged	Forged	Forged
Joint	Socket Weld	Weld Neck	Weld Neck	Weld Neck	Weld Neck
ASTM Spec	A182 F 316	A182 F 316	A182 F 316	A182 F 316	A182 F 316
Rating	1500# RF	1500# RF	1500# RF	1500# RF	1500# RF
Bored to	Schedule 160	Schedule 160	Schedule 120	Schedule 140	Schedule 160

NOTES: Design of sizes 18" O.D. and larger subject to Wisconsin Public Service approval.

*See Figure 3-2 for location of A and B.

**Reference: Piping Specification Category 2501 received from Wisconsin Public Service.

TABLE 3-6. PIPELINE LIST PIPING SPECIFICATION--PIPE CODE C, D, E, F* DOWNSTREAM PIPING - KEWAUNEE FSAR CLASS II**

Design Conditions				
Pressure	600 psig	700 psig	875 psig	600 psig
Maximum Temperature	600 F	400 F	200 F	400 F
Material--Stainless Steel of ASTM Specification listed below for each item.				
Pipe				
Size		3/4" to 6"	8" and 10"	12" to 18"
Construction		Seamless	Seamless	Welded
ASTM Spec		A312 Type 304	A312 Type 316	A358 Class 1 Type 316
Schedule		40S	40S	40
Fittings				
Size	2" and Smaller	3" to 6"	8" and 10"	12" and 18"
Type	Forged	Seamless	Seamless	Welded
Joint	Socket Weld	Butt Weld	Butt Weld	Butt Weld
ASTM Spec	A182 F 304	A403 WP 304	A403 WP 316	A403 WP 316
Rating	3000#	Schedule 40S	Schedule 40S	Schedule 40
Flanges				
Size	2" and Smaller	3" to 6"	8" and 10"	12" and 18"
Type	Forged	Forged	Forged	Forged
Joint	Socket Weld	Welding Neck	Welding Neck	Welding Neck
ASTM Spec	A182 F 304	A182 F 304	A182 F 304	A182 F 304
Rating	600# RF	600# RF	600# RF	600# RF
Bored to	Schedule 40S	Schedule 40S	Schedule 40S	Schedule 40

*See Figure 3-2 for location of C, D, E, and F.

**Reference: Piping Specification Category 601 received from WPSC.

couples with the discharge piping from safety valve PR-3A. The distance from this coupling tee to the center of the next horizontal elbow is about 2.2 feet. The coupled discharge piping for both safety valves continues for approximately 6 feet to the center of the third horizontal elbow. The discharge piping continues to the pressure relief tank as shown in Figure 3-1 and as described in Table 3-4.

4.0 EPRI S/RV TEST FACILITIES

4.1 COMBUSTION ENGINEERING TEST FACILITY

The Combustion Engineering (CE) test facility was designed for full-flow tests of selected safety valves under a wide range of inlet fluid conditions and inlet piping configurations. In this section, a description is provided of the test facility, the test valves and piping, the instrumentation and measurements, as well as the data processing. Since the Kewaunee safety valve is a Crosby $6M_16$ safety valve with a loop seal, that part of the test facility which tested the Crosby 6M6 safety valve will be emphasized. Also, the measured load data used in this report was taken from the CE test facility. A more detailed description of the CE test facility can be found in Reference 14. Most of the following description was taken from References 14 and 15.

4.1.1 Overall Facility Description

Figure 4-1 shows a simplified schematic of the CE test facility. The major components of the facility were two large tanks with interconnected piping, a high pressure boiler, and a test valve with its associated inlet and discharge piping. By varying the initial fluid conditions in the tanks, the valve opening rate of the valve between the tanks, as well as the boiler flow, it was possible to simulate a wide range of transients which challenge the test valve. A more detailed drawing of the facility showing the loop seal inlet piping configuration is shown in Figure 4-2.

Table 4-1 presents design details of the CE facility. In addition to the equipment mentioned above, a recirculation pump and heaters were provided for each tank to maintain uniform fluid conditions in the tanks. Insulation and heat tracing were available so that the test valves could be heated to a specified uniform temperature. The back pressure on the test valve could be controlled by means of a back-pressure regulator valve or an orifice located in the discharge piping.

The test facility was located at the CE Kreisinger Development Laboratory in Windsor, CT. All pressure boundary parts were constructed in accordance with Section VIII of the ASME Boiler and Pressure Vessel Code and Power Piping, ANSI B31.1.

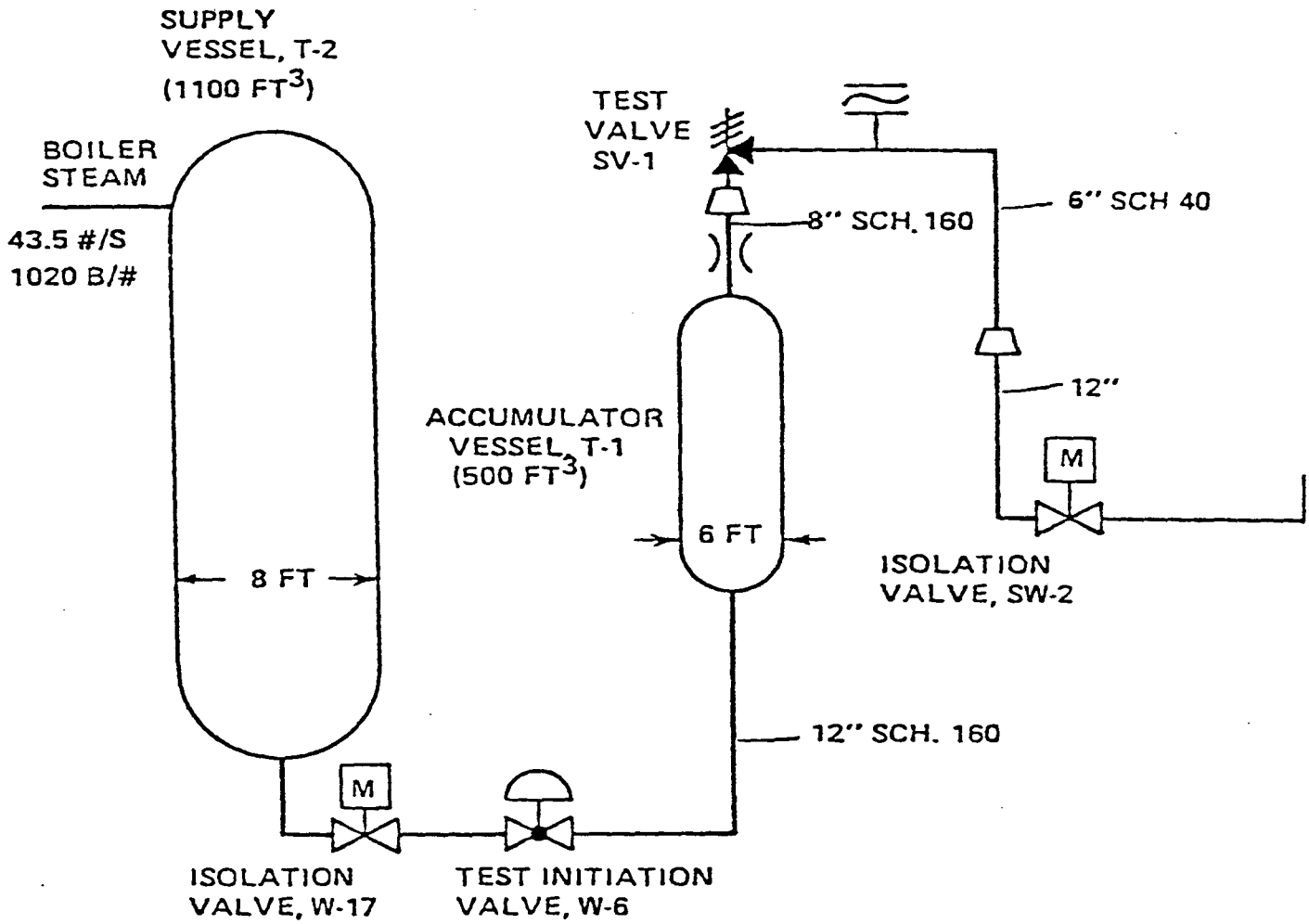

FIGURE 4-1
SCHEMATIC OF THE CE
TEST FACILITY*

*Taken from Reference 15.

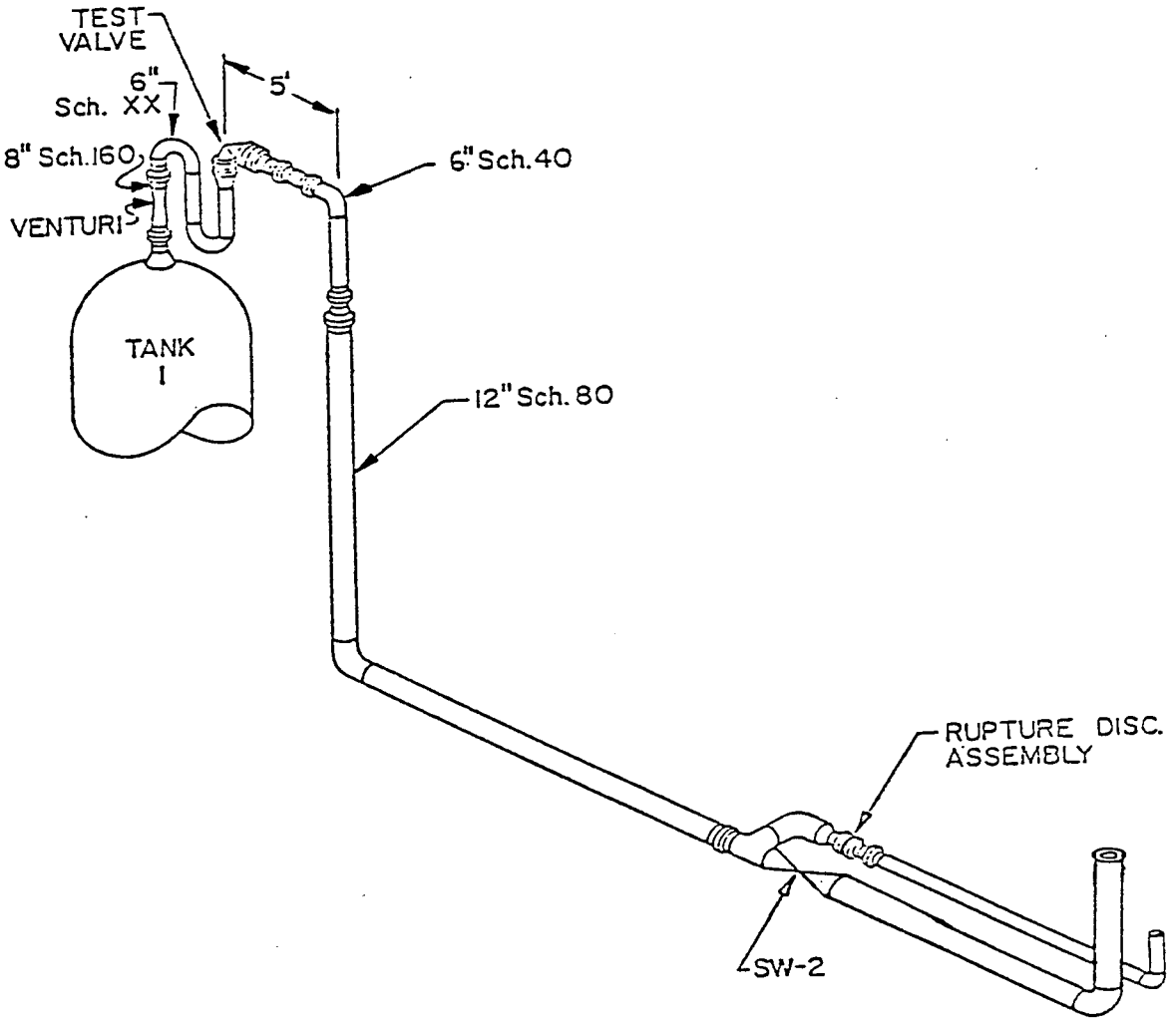

FIGURE 4-2
ISOMETRIC OF THE TEST FACILITY PIPING*

*Taken from Reference 15.

TABLE 4-1. CE TEST FACILITY DESIGN PARAMETERS

Piping and Components Upstream of Test Valve	
Design pressure	3,250 psig
Design temperature	700 F
Boiler capacity	150,000 lb/hr
Piping and Components Downstream of Test Valve	
Design pressure 700 F	1,000 psig
System Flow Capacity	
Continuous steam flow	150,000 lb/hr
Transient steam flow (15 seconds)	600,000 lb/hr*
Transient liquid flow (15 seconds)	5,500 gpm*

*The flow rates noted above are achieved by expansion or evaporation of the fluid in the larger accumulator tank. Additional capacity is available by supplementing accumulator capacity with that of the test facility boiler, either directly or as a driving head to push water through the test valve.

4.1.2 Test Valves and Piping

4.1.2.1 Description of Test Valves. Since the Crosby 6M6 safety valve represented the Kewaunee $6M_16$ safety valve performance at the CE test facility, a description of the Crosby 6M6 valve will be given here. More information related to valve justification is presented in Section 6.0.

A diagram of the Crosby 6M6 safety valve is shown in Figure 4-3. The valve is a spring-loaded safety valve manufactured by Crosby Valve and Gage Company, Wrentham, MA. The test valve model number was HB-BP-86, the serial number was N56964-00-0086, and the manufacturer's drawing number for the valve was Crosby DS-C-56964, Rev. C. An M orifice with a flow area of 0.0253 ft^2 was installed in the Crosby 6M6 valve during testing. The rated flow capacity of the valve with the M orifice was 420,000 lb/hr at the rated lift of 0.538 in.

4.1.2.2 Discharge Piping Description. Figure 4-4 shows a schematic diagram of the safety valve discharge piping for the Crosby 6M6. This figure indicates how the spoolpieces were connected for each test. Detailed drawings for the individual spoolpieces may be found in Reference 11.

4.1.2.3 Piping Support Description. The design approach established for the test loop piping supports was to provide supports which would facilitate experimental measurement of piping loads. Based on this design goal, extremely rigid dynamic support structures were designed for the test valve stand and test valve discharge piping.

The test valve stand is shown in Figure 4-5. This structure allowed most of the shear and moment at the test valve inlet flange to be transmitted through a pair of linkage assemblies.

In addition to the test valve stand, the discharge pipe was supported at the second discharge elbow, midway between the second and third discharge elbows and at the third discharge elbow. The structures at the second and third discharge elbows are shown in Figures 4-6 and 4-7, respectively. At the second discharge elbow, the pipe was restrained in both the horizontal and vertical directions utilizing solid members. The structure midway between the second and third discharge elbows also included hydraulic

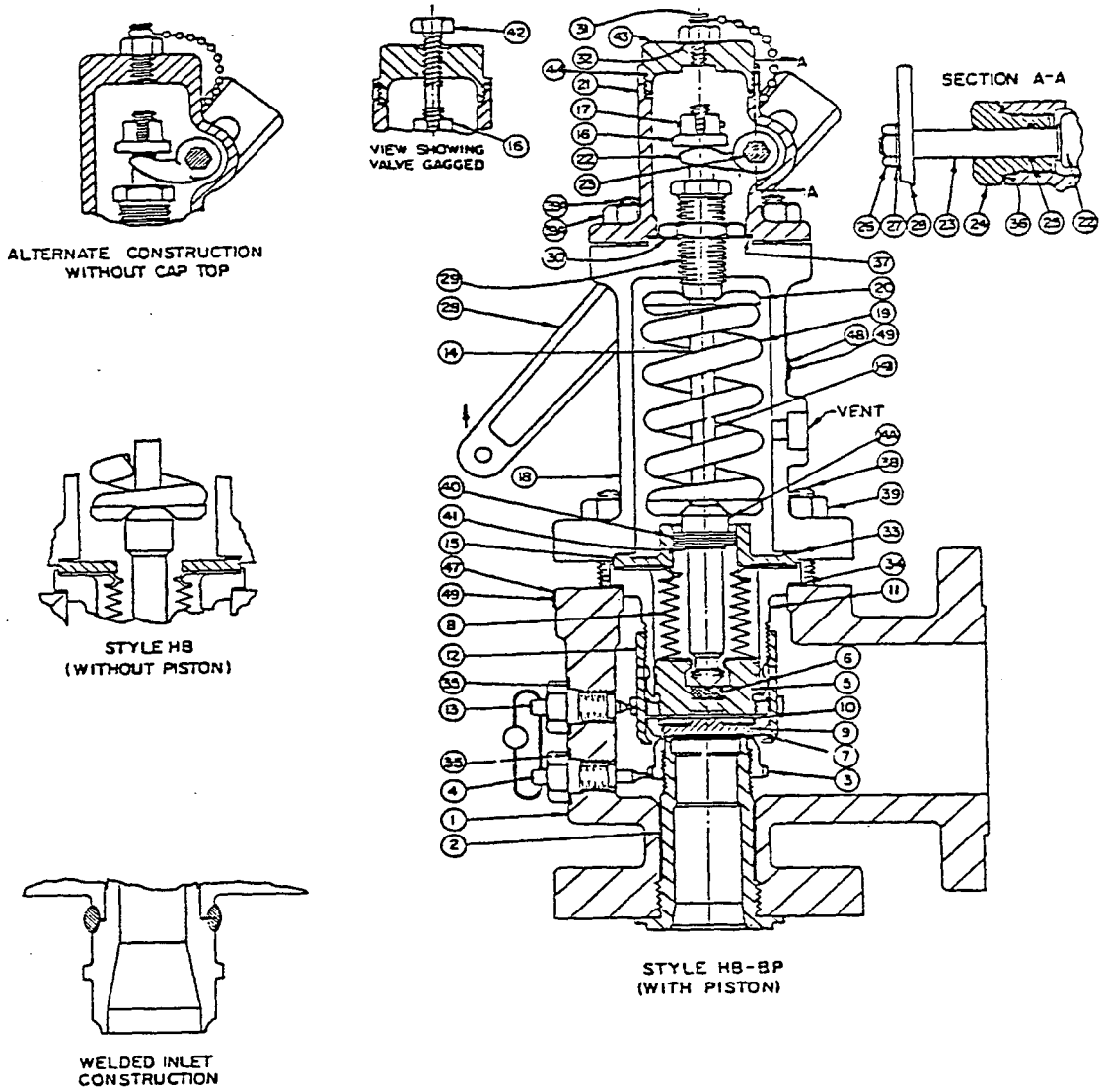

FIGURE 4-3
DIAGRAM OF THE CROSBY 6M6
SAFETY VALVE*

*Taken from Reference 6

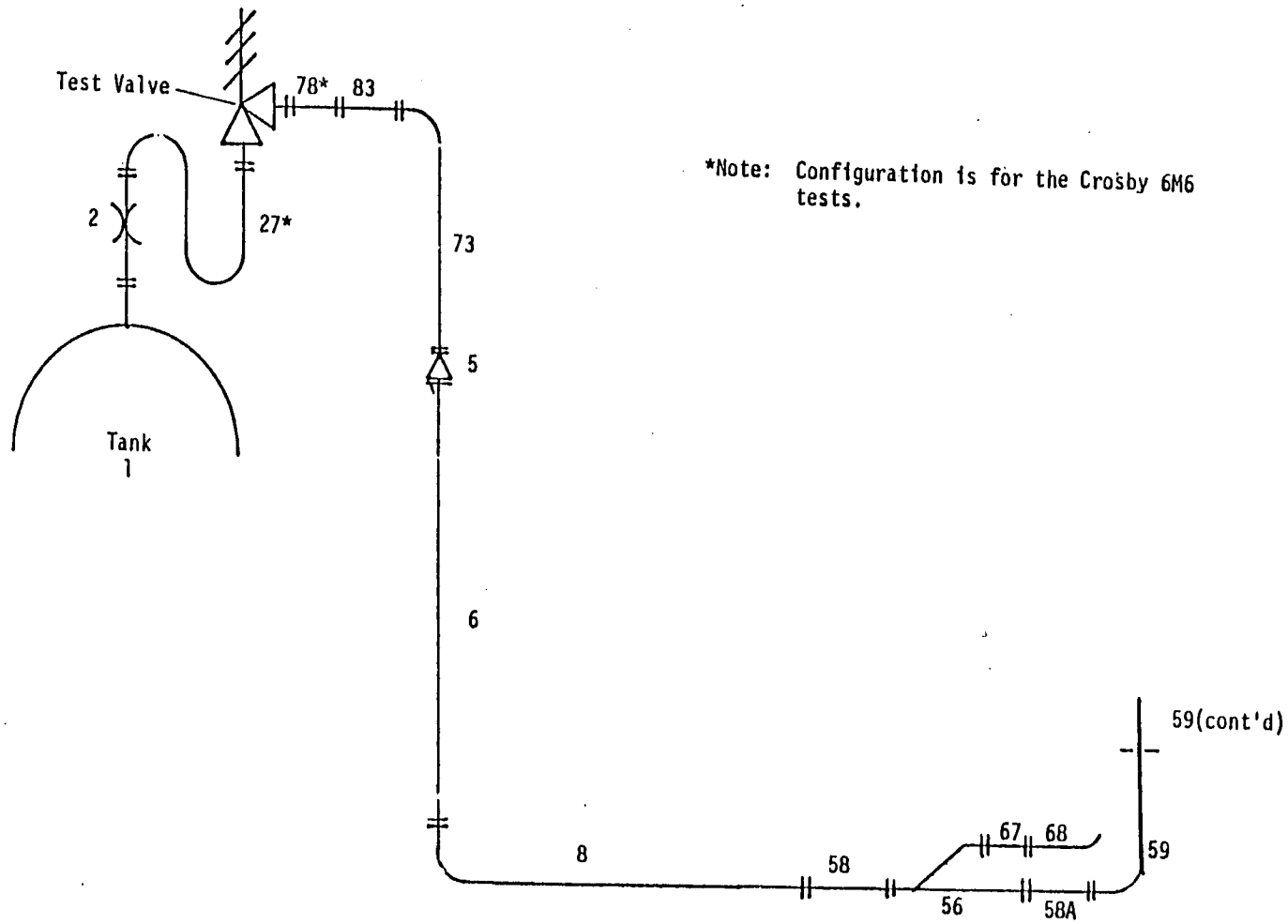

*Note: Configuration is for the Crosby 6M6 tests.

*Taken from Reference 15

FIGURE 4-4
SPOOLPIECE DIAGRAM FOR THE CROSBY 6M6*

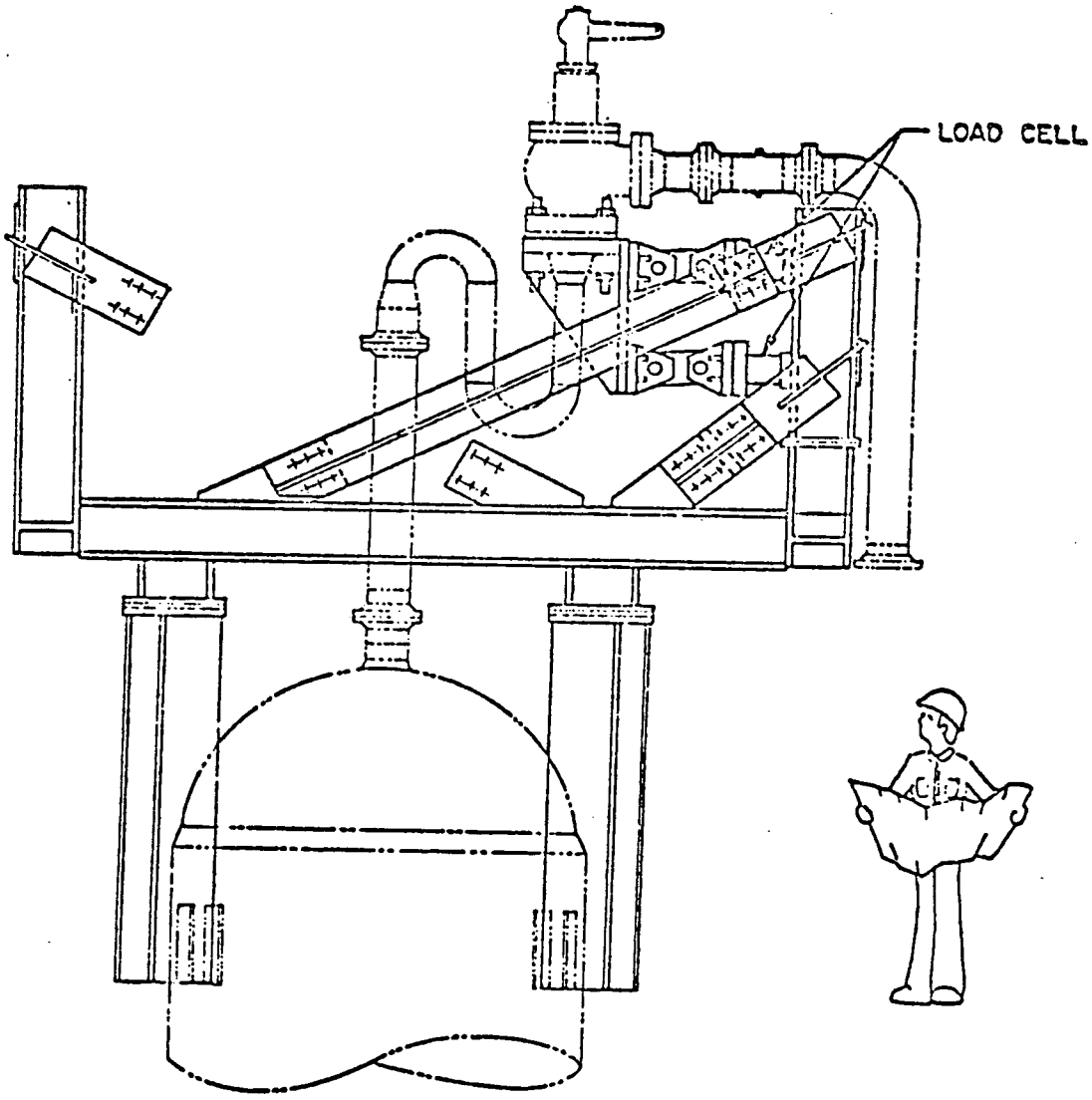

FIGURE 4-5
DIAGRAM OF THE UPPER TEST
STAND ASSEMBLY

*Taken from Reference 14.

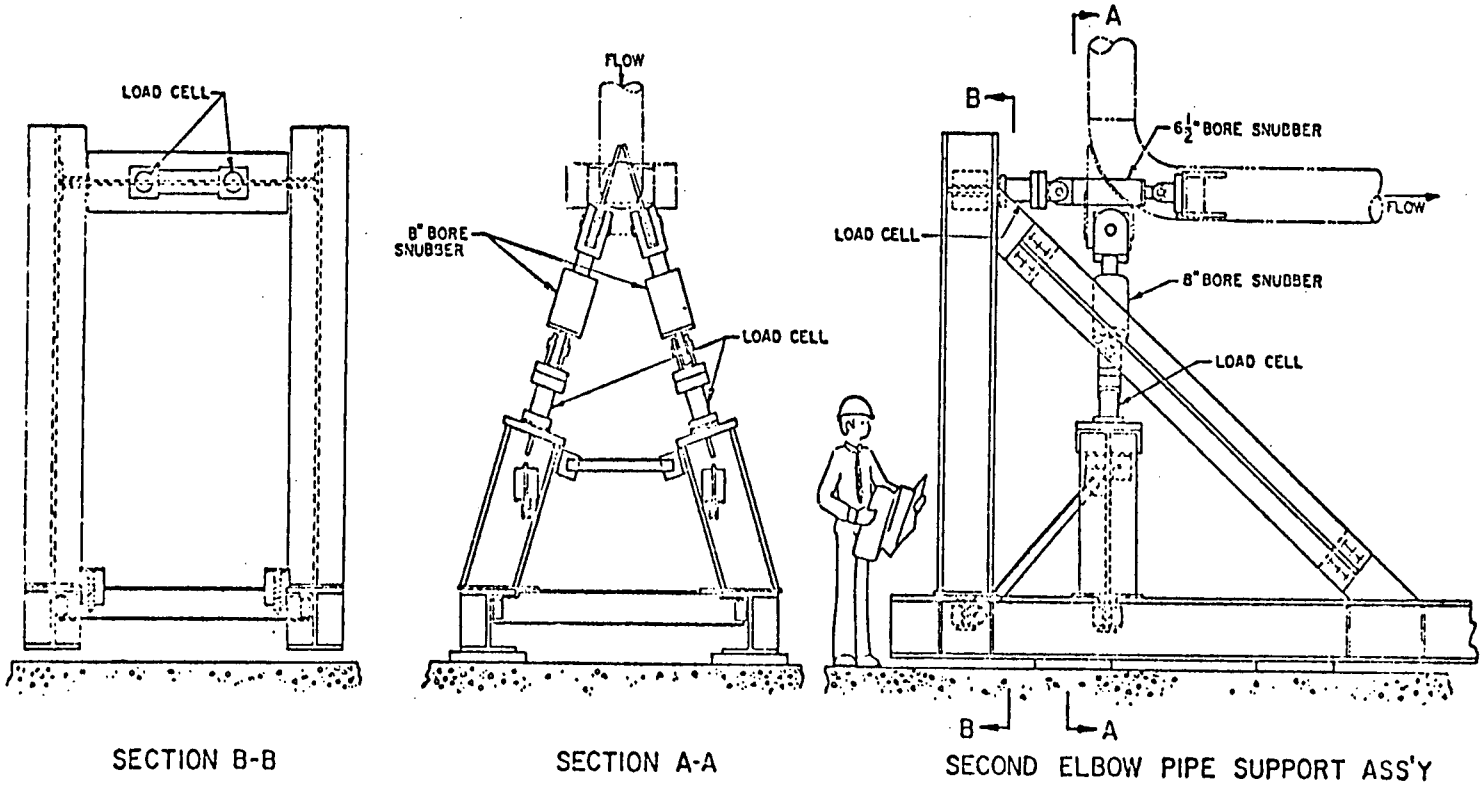

*Taken from Reference 14

FIGURE 4-6
DIAGRAM OF THE SECOND ELBOW PIPE SUPPORT ASSEMBLY*

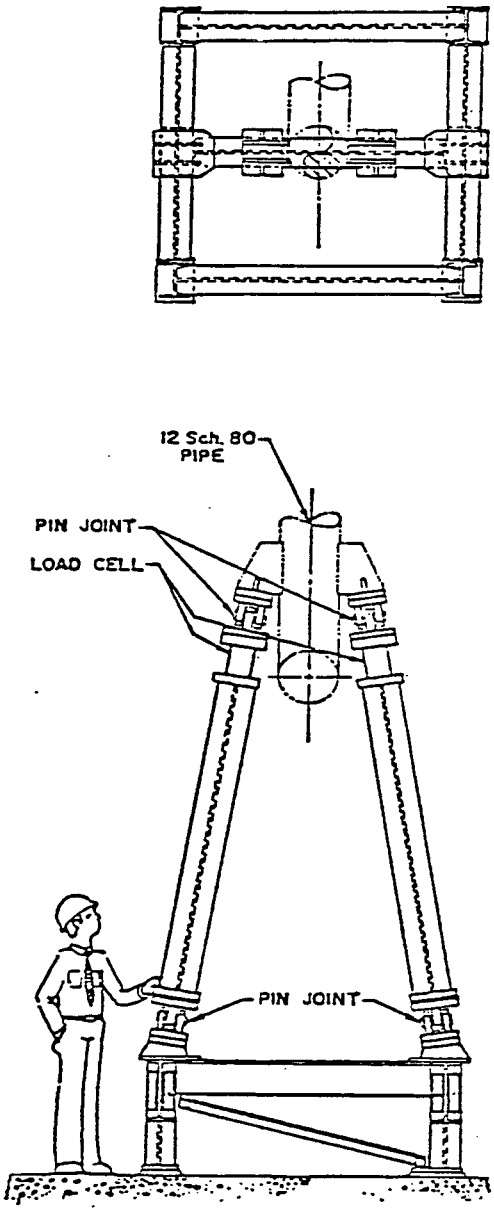

FIGURE 4-7
DIAGRAM OF THE THIRD ELBOW
PIPE SUPPORT ASSEMBLY

*Taken from Reference 14.

snubbers and was installed to restrict out-of-plane vibration of this relatively long section of pipe. The third elbow support allowed for free in-plane horizontal motion but was rigid vertically. A description of the load, strain, and displacement instrumentation installed for measuring valve and piping reaction forces is provided in Subsection 4.1.3.

4.1.3 Instrumentation and Measurements

The instrumentation utilized in the valve test facility may be divided into two groups: test instrumentation and process instrumentation. Test instrumentation consisted of those instruments that provided the basic data for assessing valve operability and for measurement of valve and piping reaction forces. Process instrumentation consisted of those instruments provided to aid in operating the test loop and monitoring equipment performance.

Table 4-2 presents a partial list of the instrumentation utilized in the valve test facility. Figure 4-8 shows the locations of the instrumentation. The instruments are described by measurement types in the following discussion.

4.1.3.1 Load Cell Measurements. Force measurements were made by summing the output of a pair of load-cell transducers. This summation was necessary because of the geometry of the pipe supports. The load cells were Lebow 3156 strain gage type transducers, with an accuracy of ±0.5 per cent of the full-scale value.

4.1.3.2 Pressure Measurements. Pressure measurements were made using strain gage-diaphragm type transducers. The accuracy of the 0-3,500 psia as well as the 0-1,500 psia measurements were ±0.27 per cent of the full-scale value.

4.1.3.3 Temperature Measurements. Transient temperature measurements were made using Type K thermocouples. The accuracy of these measurements was ±0.75 per cent of reading or 4.0 F, whichever was larger.

4.1.3.4 Mass Flow Measurements. Mass flow measurements were made by using a venturi. The venturi was a short-form type made by Vickery-Simms (Model Number V-11928-1).

4.1.3.5 Valve Stem Position Measurements. Valve stem position measurements were made using LVDT transducers.

TABLE 4-2. PARTIAL LIST OF CE TEST INSTRUMENTATION*

Instrument	Location	Range	Maximum Frequency (HZ)
LOAD CELL MEASUREMENTS			
WE 28 and 29	Support test valve inlet flange (x-axis)	± 25 kips ± 100 kips	200
WE 30 and 31	End of first vertical run discharge pipe (x-axis)	± 25 kips ± 100 kips	200
WE 32 and 33	End of first vertical run discharge pipe (y-axis)	± 25 kips ± 100 kips	200
WE 34 and 35	Support at exterior elbow (y-axis)	± 25 kips ± 100 kips	200
PRESSURE MEASUREMENTS			
PT 08	Valve exit	0-1500 psia	200
PT 09	First horizontal run discharge pipe	0-1500 psia	200
PT 10	Vertical run of discharge pipe at inlet to first elbow	0-1500 psia	200
PT 11	Pressure between SW-2 and SW-3	0-1500 psia	200
PT 12	Test valve inlet	0-3500 psia	500
TEMPERATURE MEASUREMENTS			
TE 19	Test valve inlet	0-800 F	2
TE 20	Test valve inlet	0-800 F	2
TE 40	Test valve outlet	0-800 F	2
TE 41	Test valve outlet	0-800 F	2
TE 42	Downstream of backpressure valve SW-3	0-800 F	2
TE 43	Inlet to second elbow in discharge pipe	0-800 F	2

*Taken from Reference 15.

TABLE 4-2 (Continued). PARTIAL LIST OF CE TEST INSTRUMENTATION*

Instrument	Location	Range	Maximum Frequency (HZ)
TEMPERATURE MEASUREMENTS (Continued)			
TE 44	Between valves SW-2 and SW-3	0-800 F	2
TE 45	Exit nozzle	0-800 F	2
TE 46	Inside discharge pipe wall in first horizontal run	0-800 F	2
TE 47	Inside discharge pipe wall in vertical run	0-800 F	2
TE 48	Inside discharge pipe wall in second horizontal run	0-800 F	2
TE 78	Test valve inlet pipe strain gage	0-800 F	2
TE 91	Test valve outlet flange strain gage	0-800 F	2
MASS FLOW MEASUREMENTS			
FT 24	Valve inlet venturi	0-40 psid	20
FT 25	Valve inlet venturi	0-40 psid	20
DISPLACEMENT MEASUREMENTS			
ZE 17	Test valve	± 5 inches	200
ZE 36	Test valve	± 5 inches	200

*Taken from Reference 15.

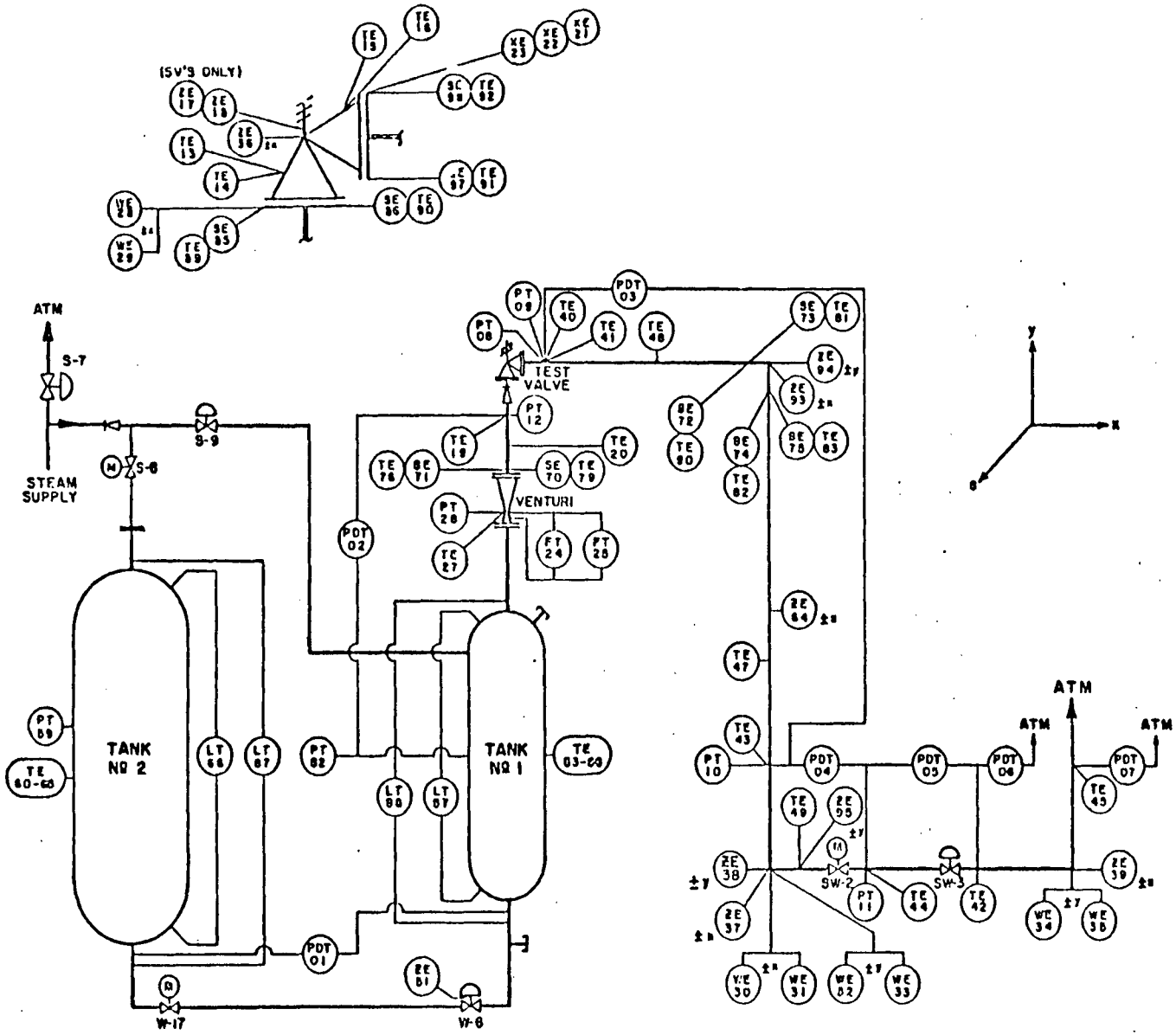

FIGURE 4-8
CE TEST INSTRUMENTATION*

*Taken from Reference 14.

4.1.4 Data Processing

The test program data acquisition system, illustrated schematically in Figure 4-9, provided for the acquisition of test data and processing and presentation of "quick look" data in engineering units. The data obtained were recorded with an on-line digital system. Selected high-frequency measurements were recorded simultaneously on an analog tape recorder.

The digital system consisted of the following hardware.

(1) A Data General S-140 Eclipse CPU with 256 kilobytes of memory and floating-point capabilities.

(2) A 192-channel multiplexer with a 14 bit analog-to-digital converter with a maximum conversion speed of 50,000 Hz.

(3) A 190 megabyte moving head disc unit.

(4) Two digital, nine-track dual-density (800/1,600 BPI) magnetic tape drives.

(5) Two cathode-ray tube terminals for system control.

(6) An 11-inch wide electrostatic type plotter.

(7) An 180-characters per second, 132-column printer.

The analog recording system consisted of a 42-track EMI magnetic tape record/playback unit. This unit was operated in a frequency-modulated (FM) mode for the acquisition of test data. Event time information was recorded on one track during testing. This feature allowed the location of a particular event on the tape for analysis. An interface between the analog and digital systems allowed the FM tapes to be digitized after the test had been completed.

A software package for the digital system was designed to meet the specific needs of the test program. Operational features of this software were divided into three groups: instrument/calibration history, on-line test loop monitoring, and data acquisition and processing. During pretest and post-test periods of loop operation, a monitor program provided the operations engineer with the pertinent loop-status information. This facilitated the process of bringing the loop to the required pretest conditions. Flexibility was designed into each of these areas to meet present and future requirements for the data package. The instrumentation and

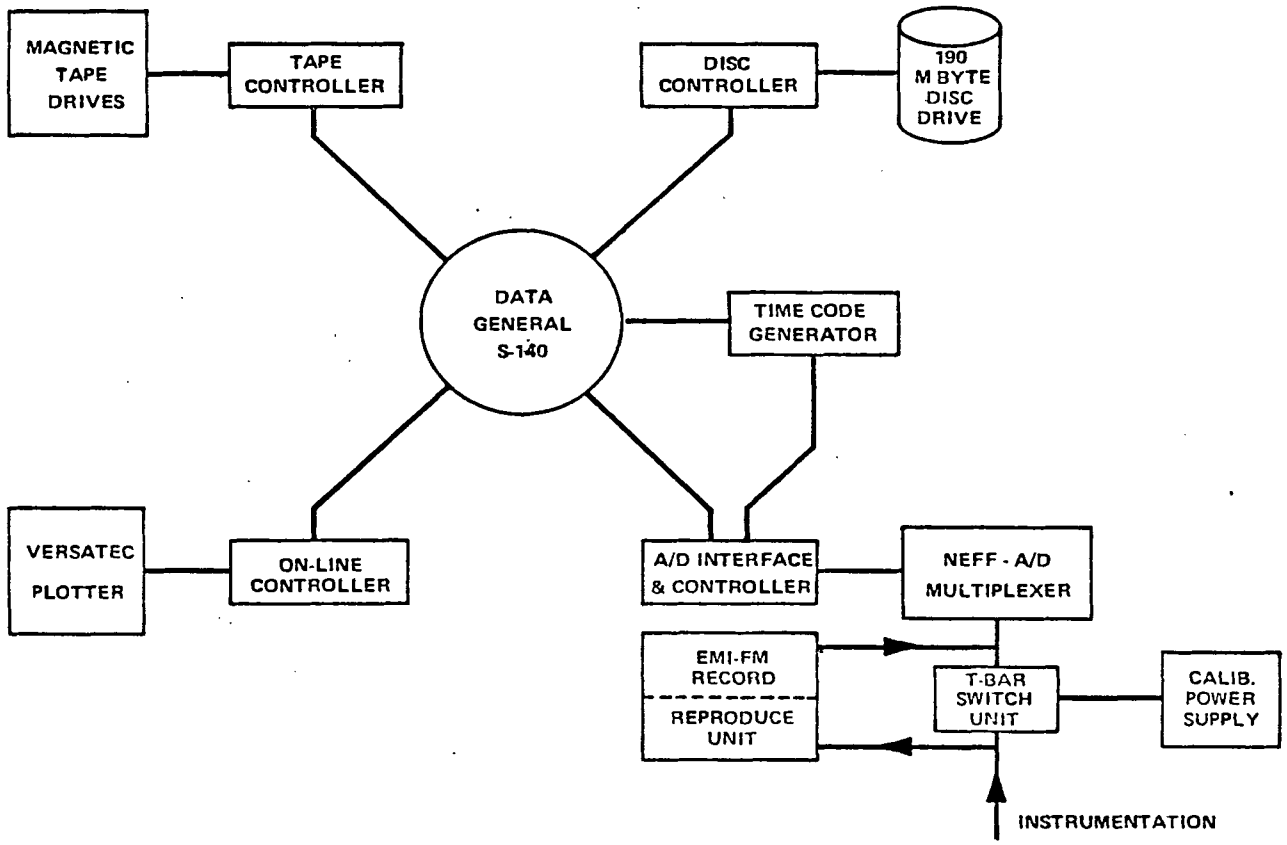

FIGURE 4-9
EPRI/CE SAFETY VALVE TEST
DATA ACQUISITION SYSTEM

*Taken from Reference 14.

calibration history programs compiled a comprehensive set of documentation detailing the measurement system for the duration of testing, thus providing traceability for the measurements made for each individual test.

The data acquisition program was designed to acquire data during loop transients. Data for each measurement was recorded according to the specifications provided in the instrumentation list. As the transient occurred, the data was logged in scan format on the 190-Mbyte disc unit. At the completion of a test, the data file was reorganized into a time-history format. This reorganized data, along with the calibration information for each instrument, was then transferred to magnetic tape for transmittal to the CE Data Center. To meet the requirements of test acceptance, a quick-look data reduction package was written. The measurement parameters required were converted to engineering units and plotted as time histories at the completion of each test. The software package was designed so that the specific parameters to be converted for plotting could be altered during the course of testing.

A software package was provided for the digitizing of FM data. These data were stored on the 190-Mbyte disk and then reorganized to time histories. This file was organized identically to the file generated from the digital data acquired during testing.

4.1.5 Comparison Between CE Test Facility Piping and Kewaunee S/RV Piping

Since the upstream and downstream piping geometrics are important parameters in the safety valve testing, a comparison between the CE Test Facility loop seal piping configuration used to test the Crosby 6M6 safety valve and the Kewaunee safety valve piping configuration is presented below.

The description of the CE Test Facility discharge piping is given in Table 4-3 and an isometric sketch of the CE Test Facility is shown in Figure 4-10.

S/RV piping configurations of the Kewaunee Power Station are shown in Figures 3-1 and 3-2. A detailed description of the Kewaunee S/RV piping layout is given in Table 3-4 of Subsection 3.2.

TABLE 4-3. DESCRIPTION OF COMBUSTION ENGINEERING TEST FACILITY PIPING

Loop seal piping and tank 1 to the center of the safety valve:

1. The loop seal is 8-inch Schedule 160 and 6-inch Schedule XX piping.
2. There is 4.7 feet of 8-inch pipe from the tank to first 180 degree bend.
3. The first 6-inch 180 degree bend has a circumferential length of 2.4 feet.
4. There is 1.1 feet of 6-inch vertical pipe from the first 180 degree bend to the second 180 degree bend.
5. The second 6-inch 180 degree bend has a circumferential length of 2.4 feet.
6. A rigid restraint located at the end of the second 180 degree bend provides support in plane with the loop seal.
7. There is 2.3 feet of 6-inch vertical pipe between the second 180 degree bend and the valve.
8. The vertical portion of the valve and flange is 0.9 feet long.

CE Test Facility discharge piping:

1. The discharge piping is 8-inch Schedule 40 and 12-inch Schedule 80.
2. The horizontal portion of the valve and flange is 0.9 feet long.
3. There is 3.9 feet of 8-inch horizontal piping from the valve to first discharge elbow.
4. The first discharge elbow has a circumferential length of 1.6 feet.
5. There is 7.0 feet of 8-inch vertical piping and 13.8 feet of 10-inch vertical piping between the first and second discharge elbow. This piping is restrained in the axial direction by a snubber located on the second discharge elbow.
6. The second discharge elbow has a circumferential length of 2.4 feet.
7. There is 21.4 feet of 12-inch horizontal piping between the second discharge elbow and a pair of snubbers providing horizontal and vertical support. This piping is also restrained axially by a snubber located on the second discharge elbow.
8. There is 16.7 feet of horizontal piping between the snubber pair and the third discharge elbow.
9. The third discharge elbow has a circumferential length of 2.4 feet. A rigid restraint provides vertical support at the third discharge elbow. The pipe then discharges to the atmosphere.

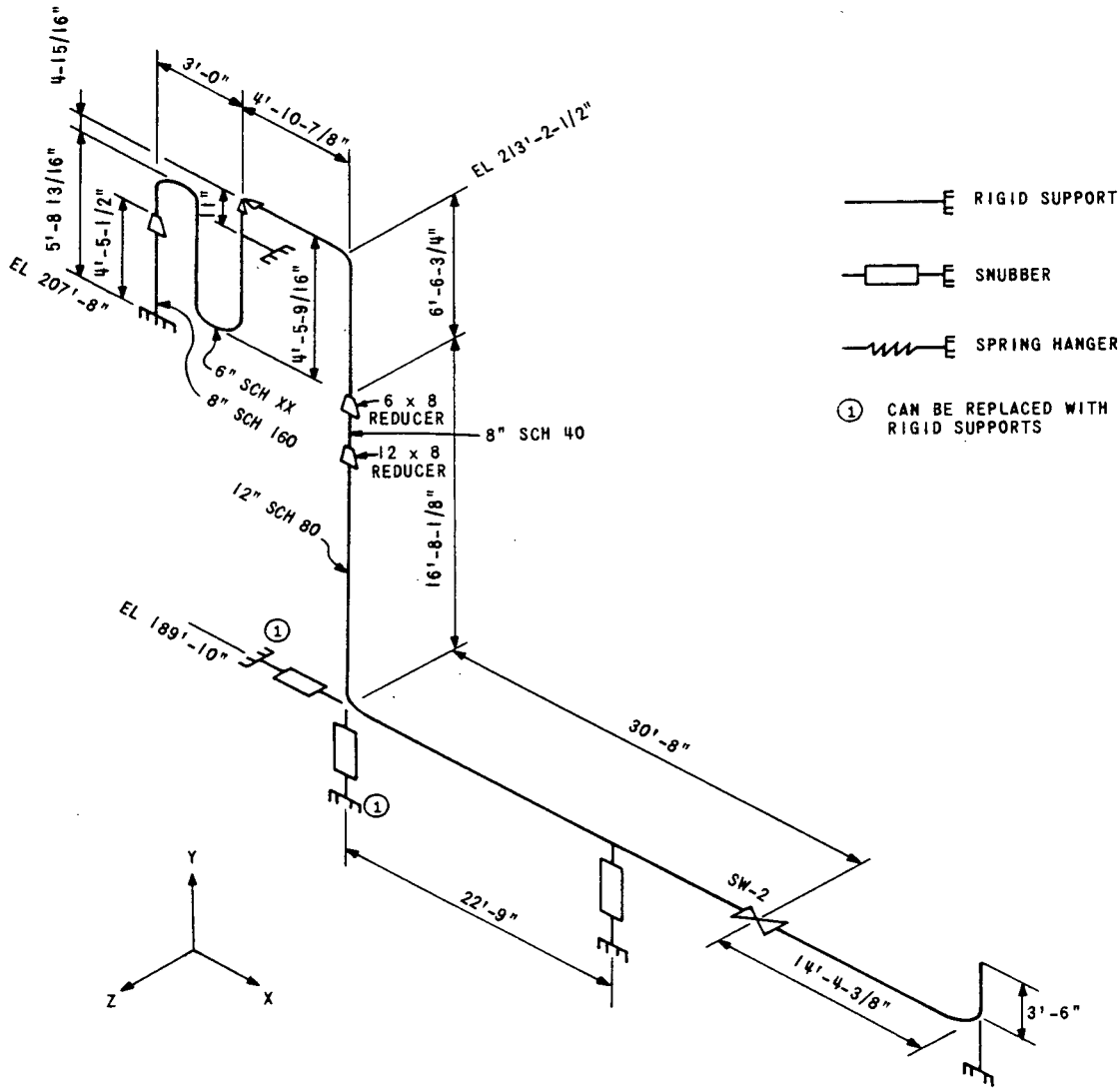

FIGURE 4-10
ISOMETRIC OF CE TEST PIPING
SAFETY VALVE WITH LOOP SEAL

The general discharge piping configurations for the CE Test Facility and the Kewaunee Power Plant are in good agreement as shown in Figure 4-11. It should be noted that the Kewaunee piping representation in Figure 4-11 is taken from the safety valve PR-3A. Both the test valve and the actual valve discharge into 6-inch Schedule 40 piping proceeds through a 90 degree elbow and expands through a reducer.

The major differences between the tested discharge piping and the Kewaunee discharge piping are (1) the length of the piping between elbows is longer for the CE facility, (2) the CE Test Facility piping expands into a 12-inch pipe whereas the Kewaunee piping expands into a 10-inch pipe, and (3) the first discharge elbow at the CE Test Facility is a vertical elbow whereas the Kewaunee first discharge elbow is a horizontal elbow.

These differences will produce significantly different loads between the test facility and Kewaunee S/RV discharge piping, and a direct application of the CE tested loads to the Kewaunee discharge piping is not appropriate since the loads produced in the Kewaunee discharge piping will be significantly lower.

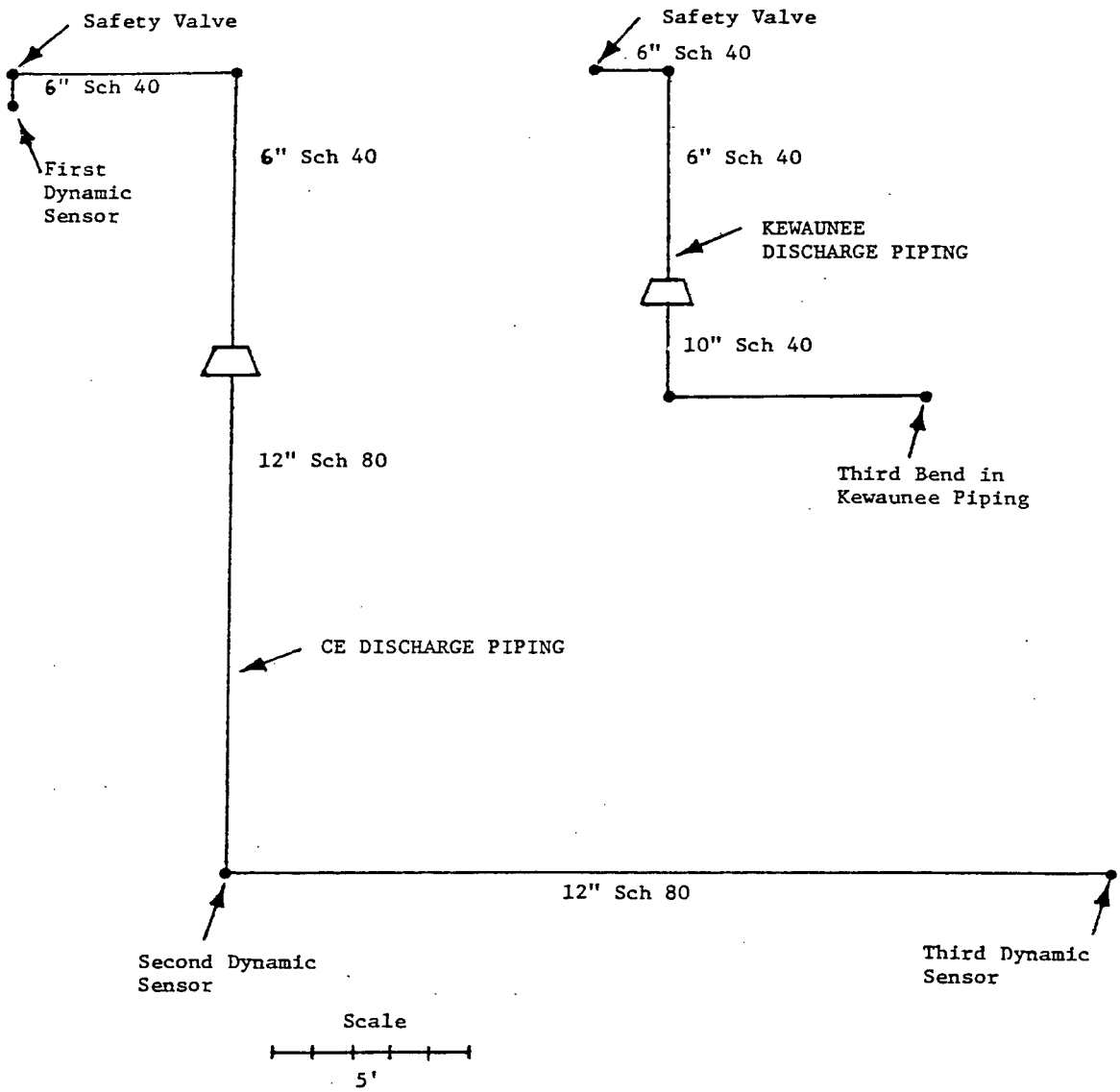

FIGURE 4-11
DISCHARGE PIPING SIZE
COMPARISON BETWEEN KEWAUNEE
AND CE TEST FACILITY

5.0 CONDITIONS WHICH MAY CAUSE KEWAUNEE SAFETY AND RELIEF VALVE ACTUATION

Many transients situations were evaluated in Kewaunee's FSAR Chapter (See Reference 5). These events which caused actuation of the Kewaunee relief or safety valves are presented in Table 5-1. Based on the results presented in the Kewaunee FSAR, the relief valves provided pressure relief for all evaluations. Some evaluations (i.e., Locked Rotor and Loss of Load accidents) were evaluated assuming the relief valves did not actuate. Of these two the Locked Rotor accident produced the greater pressure and pressure rise of 2,737 psia and 280 psi/second. The Locked Rotor transient was done using very conservative assumptions and is considered the upper bound transient for safety valve activation.

TABLE 5-1. KEWAUNEE FSAR EVENTS WHICH CAUSED RELIEF OR SAFETY ACTUATION

The following events cause the actuation of the safety and/or relief valves based on Kewaunee FSAR.

1. Uncontrolled RCCA withdrawal from full power terminated by over-temperature ΔT trip.
   - Relief valve actuation.
   - Maximum pressure, 2,350 psia at 42 seconds.
   - Maximum pressure ramp rate, 7.7 psi/seconds.
   - See Kewaunee FSAR Section 14.1.2 and Figure 14.1-8.
2. Locked rotor accident.
   - Safety actuation (relief valves would normally open but were left closed for this analysis).
   - Maximum pressure, 2,737 psia at 2.5 seconds.
   - Maximum pressure ramp rate, 304. psi/second.
   - See Kewaunee FSAR Section 14.1.8 and Figure 14.1-34.
3. Loss of Load accident with reactor control with pressurizer relief and spray valves beginning of life.
   - Relief valve actuation.
   - Maximum pressure, 2,450 psia at 15.5 seconds.
   - Maximum pressure ramp rate, 47 psi/seconds.
   - See Kewaunee FSAR Section 14.1.9, Figure 14.1-38.
   - Full credit assumed for pressurizer spray, relief valves and control and insertion. No credit taken for steam dump.
4. Loss of Load accident with reactor control with pressurizer relief and spray valve end of life.
   - Relief valve actuation.
   - Maximum pressure, 2,355 psia at 5 seconds.
   - Maximum pressure ramp rate, 43 psi/seconds.
   - See Kewaunee FSAR Section 14.1.9, Figure 14.1-40.
   - Full credit assumed for pressurizer spray, relief valves and control rod insertion.

TABLE 5-1 (Continued). KEWAUNEE FSAR EVENTS WHICH CAUSED RELIEF OR SAFETY ACTUATION

5. Loss of Load accident with no reactor control. No pressurizer relief or spray valves--beginning of life.
   - Safety valve actuation.
   - Maximum pressure, 2,545 psia at 8.5 seconds.
   - Maximum pressure ramp rate, 50 psi/seconds.
   - No credit taken for the pressurizer spray, relief valves, or steam dump.
6. Loss of Load accident with no reactor control, no pressurizer relief or spray valves, end of life.
   - Safety valve actuation.
   - Maximum pressure, 2,528 psia at 9 seconds.
   - Maximum pressure ramp rate, 48 psi/seconds.
   - No credit taken for the pressurizer spray, relief valves, or steam dump.
7. Rupture of control rod drive mechanism.
   - Relief valve actuation.
   - No transient curves.
   - For above FSAR and RESAR, the "System Overpress Analysis" indicates the reliefs may open. Relief actuation is covered under other events.
8. Loss of normal feedwater (from pipebreak, pump failure, valve malfunctions, or loss of off-site power)

   "The loss of normal feedwater does not result in any adverse condition in the core, because it does not result in water relief from the pressurizer relief or safety valve..." (pg 14.1-48 of Kewaunee PSAR).

6.0 QUALIFICATION OF THE PROCEDURE TO DETERMINE PIPING LOADS DUE TO THE OPENING OF A SAFETY OR RELIEF VALVE

There are several postulated reactor coolant system transients which may result in the actuation of the pressure relief system. These transients range from normal system transients to postulated accidents such as those analyzed in plant safety analysis reports. Typically, these plant transients result in a pressurization of the steam in the dome of the pressurizer which causes the relief and safety valves to open, thereby mitigating the overpressure transient. In most of the transients postulated, the valves open with the pressurizer steam dome full of saturated or slightly superheated steam.

Several types of valves are in service in PWR's. These valves include spring-loaded safety valves and various types of relief valves ranging from pilot-operated relief valves (PORV's) to air-operated globe-type control valves. Generally, the relief valves and safety valves differ in both flow capacity and opening rate. Typically, relief valves are low-capacity valves which may open on the order of hundreds of milliseconds whereas safety valves are high-capacity, fast-acting devices opening on the order of tens of milliseconds. The testing at the CE test facility focused on spring-loaded safety valves, and all of the results presented in this section are for this type of valve. (See Section 4.0 for description of CE test facility.)

Two basic pipe inlet geometries are used between the pressurizer and the safety valve in PWR's. One consists of a vertical run of pipe designed to maintain steam against the valve seat. The other consists of a piping loop configuration designed to maintain a subcooled water seal, or water loop seal, against the valve seat. This latter design has the advantage of limiting steam leakage through the valve under normal conditions.

The analysis of pressure relief-line transients is very complex and may involve the flow of nonequilibrium steam, water or two-phase mixtures through the valve into a discharge pipe generally containing air or nitrogen. The recently released RELAP5/MOD1 (see References 16, 17, and 18) code provides the capability to more accurately calculate the phenomena expected

to occur during pressure relief system transients. Appendix A of this report discusses the RELAP5/MOD1 code in more detail.

6.1 EPRI RELAP5 QUALIFICATION

As part of the EPRI S/RV testing program, EPRI contracted with Inter-Mountain Technology, Inc. (Reference 15) to qualify RELAP5/MOD1 for use in determining thermal/hydraulic loading on the S/RV discharge piping due to the activation of valves. The performance of RELAP5/MOD1 was demonstrated by comparison with test data from the CE safety valve tests for a range of test conditions.

Six CE tests were evaluated in the ITI report. These tests are presented in Table 6-1.

The loads and deflections recorded at the CE test facility were the combined result of two interrelated components. The first of these phenomena was the hydrodynamic loading resulting from safety valve fluid discharge. The second component of the recorded test data was the dynamic structural response of the test facility to these hydrodynamic loadings. If the test facility and its support system had been infinitely rigid, the measured data would have consisted of only the hydrodynamic loadings, and the hydrodynamic loads calculated using RELAP5/MOD1 analyses could have been compared directly with the recorded test data. Due to the structural response characteristics of the test facility, however, the recorded data deviated from the actual hydrodynamic loading. This phenomenon of dynamic response characteristics is present in all structures which are subjected to dynamic loadings. The magnitude of this phenomenon at the CE test facility was determined by performing a dynamic structural analysis which was done by Combustion Engineering and ITI (Reference 15). The purpose of the dynamic structural analyses which were performed as part of the EPRI/ITI evaluation of RELAP5/MOD1 was to enable the inclusion of the structural response in the comparison of RELAP5/ MOD1 load predictions with recorded test data.

The RELAP5/MOD1-predicted hydraulic loads in the form of time history forcing functions were used as input loads for the CE dynamic structural analysis. The RELAP5/MOD1 data consisted of four separate forcing functions which were applied at pipe segments. The stiffness matrix and inertia

TABLE 6-1. CE TESTS USED BY ITI FOR EVALUATION OF RELAP5/MOD1

Test Number	Valve	Actuation Pressure (psia)	Test Conditions
1411	Crosby 6M6*	2,410	Saturated steam actuation followed by steam discharge.
917	Crosby 6M6*	2,460	Hot water (350°F) loop seal actuation followed by steam discharge.
908	Crosby 6M6*	2,560	Cold water (80°F) loop seal actuation followed by steam discharge.
1017	Dresser 31739A**	2,530	Cold water (80°F) loop seal actuation followed by steam discharge.
1027	Dresser 31739A**	2,350	Subcooled liquid (620°F) actuation and discharge.

*6-inch pipe inlet and 6-inch pipe discharge.

**2.5-inch pipe inlet and 6-inch pipe discharge.

matrix of the structural model were calculated by the DYNAL version of the STRUDL computer code, described in Reference 15. The STRUDL stiffness matrix was then modified to include non-linear support stiffnesses by the DAGS computer code, which is also described in Reference 15. The RELAP5/MOD1 forcing functions were then applied to the modified stiffness matrix and the mass matrix with the DAGS computer code. The results of the DAGS analysis consisted of support load time histories.

To complete the EPRI/ITI evaluation of the RELAP5/MOD1 calculations, the results obtained from the DAGS analysis with RELAP5/MOD1 input were compared with experimental data obtained from the CE safety valve test facility. In addition, measured pressures were compared with the code calculations.

Detailed RELAP5 model descriptions and input listings to all the cases presented in Table 6-1 can be found in Reference 15.

Since the Kewaunee safety valve piping contains a Crosby $6M_16$ safety valve with a cold loop seal, only EPRI/ITI test comparisons with CE test 908 will be presented in this section.

ITI calculated pressures and forces for CE test 908 using RELAP5/MOD1 and CE DAGS can be found on Figures 6-1 through 6-10. Description of the referenced pressure measurement points (PT08, PT09, PT10, and PT11) and the load segments can be found in Section 4.0 of this report. The RELAP5/ MOD1 pressure calculation comparisons were in good agreement with the experimental results (see Figures 6-1 through 6-10). The measured pressure of PT09 (Figure 6-2) was determined by EPRI personnel to be a spurious pressure reading and deemed unrealistically high.

The RELAP5 force calculations for CE test dynamic sensors of Segment 1, Segment 2, and Segment 3 are presented in Figures 6-5 through 6-10. As can be seen from the figures, each force segment measurement has two associated figures. The first figures (Figures 6-5, 6-7, and 6-9) represent the force calculated using RELAP5 only compared against the measured load, and the second figures (Figures 6-6, 6-8, and 6-10) present the calculated results using RELAP5 and the DAGS structural calculation. As seen from these comparisons, the dynamic structural response of the CE test facility has a

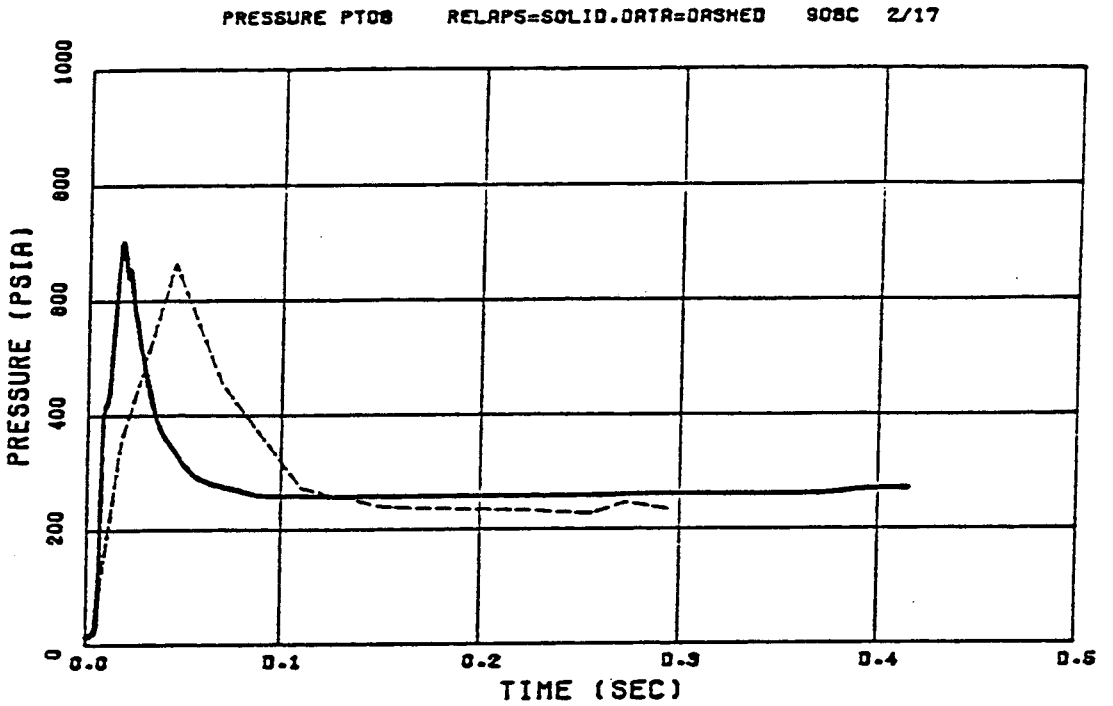

FIGURE 6-1. COMPARISON PLOT OF ITI RELAP5/MOD1-CALCULATED PRESSURE WITH PT08 EXPERIMENTAL DATA, TEST 908*

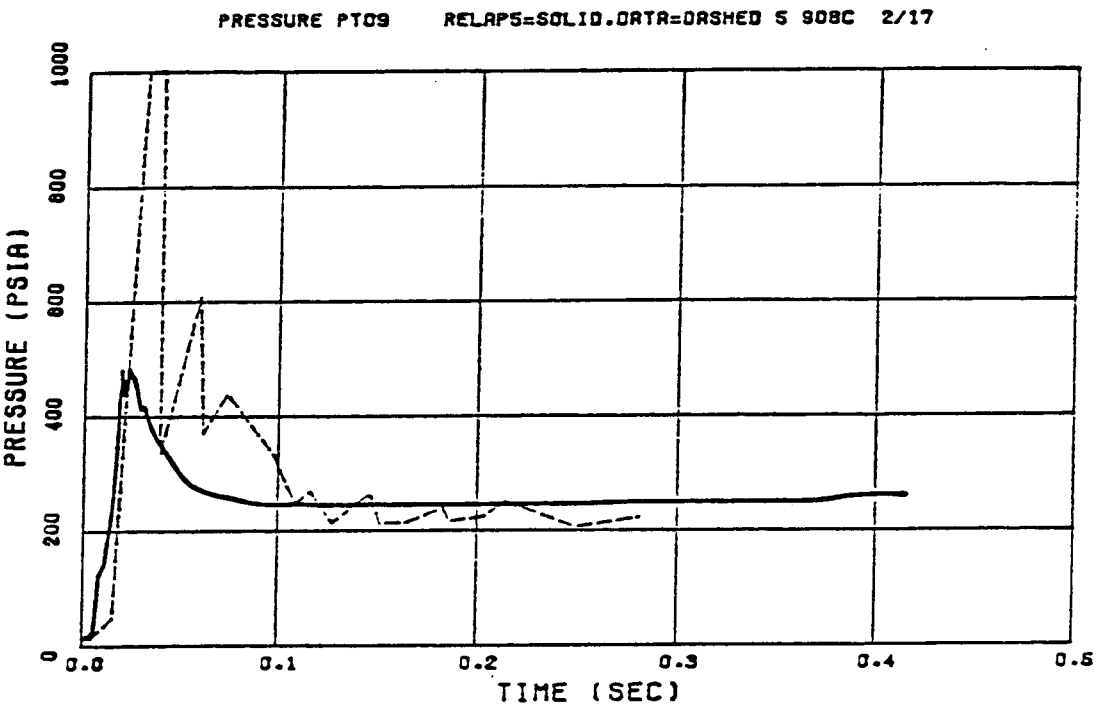

FIGURE 6-2. COMPARISON PLOT OF ITI RELAP5/MOD1-CALCULATED PRESSURE WITH PT09 EXPERIMENTAL DATA, TEST 908*

*Taken from Reference 15.

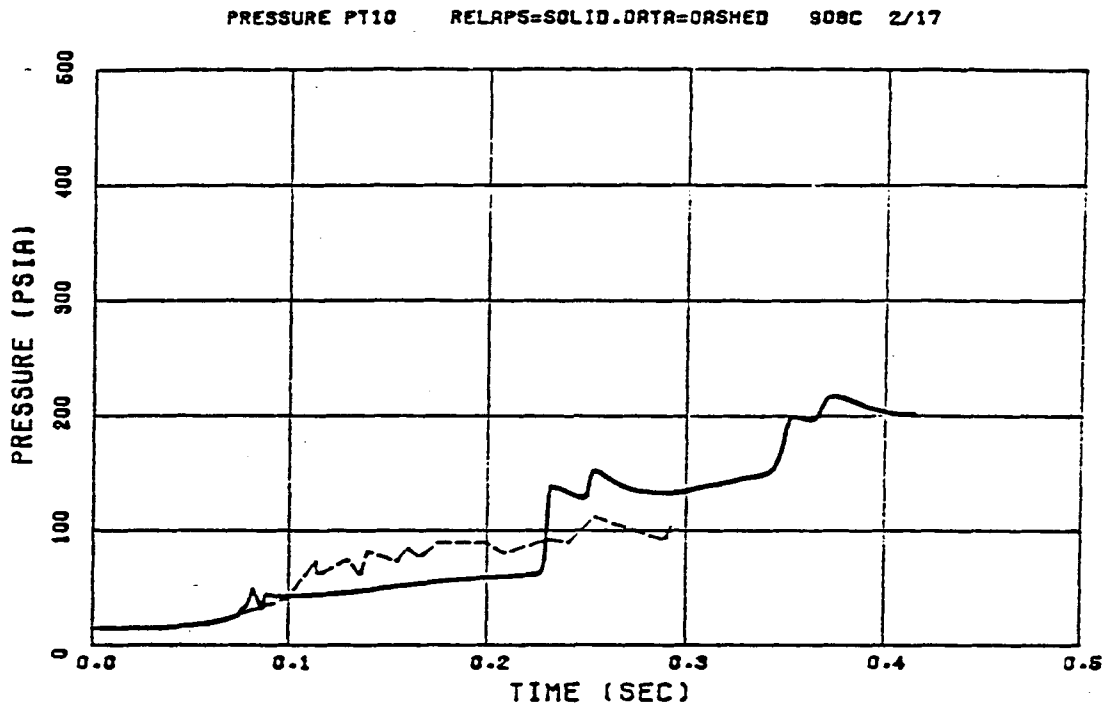

FIGURE 6-3. COMPARISON PLOT OF ITI RELAP5/MOD1-CALCULATED PRESSURE WITH PT10 EXPERIMENTAL DATA, TEST 908*

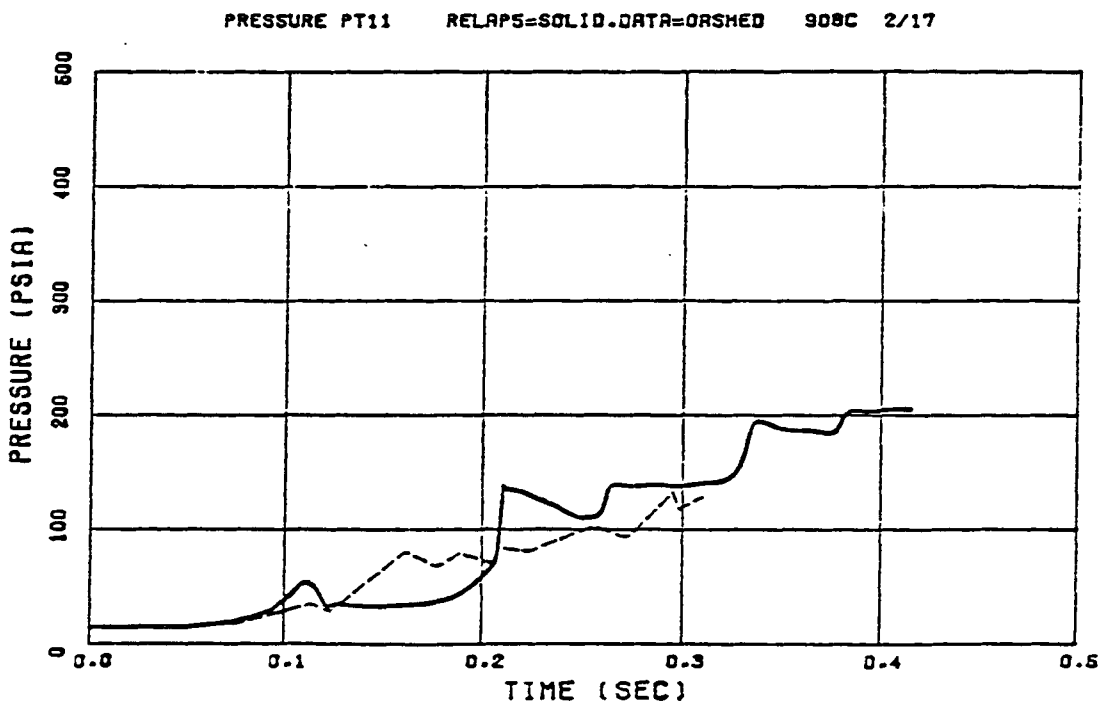

FIGURE 6-4. COMPARISON PLOT OF ITI RELAP5/MOD1-CALCULATED PRESSURE WITH PT11 EXPERIMENTAL DATA, TEST 908 *

*Taken from Reference 15.

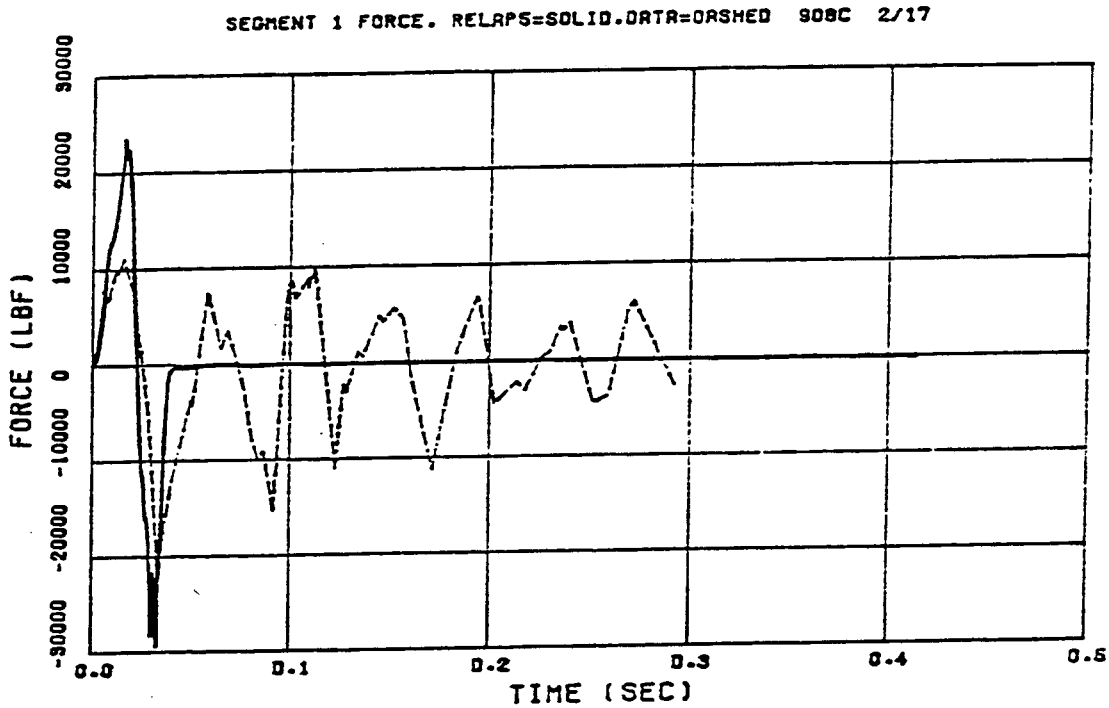

FIGURE 6-5. COMPARISON PLOT OF ITI RELAP5/MOD1-CALCULATED SEGMENT 1 FORCE WITH EXPERIMENTAL DATA, TEST 908*

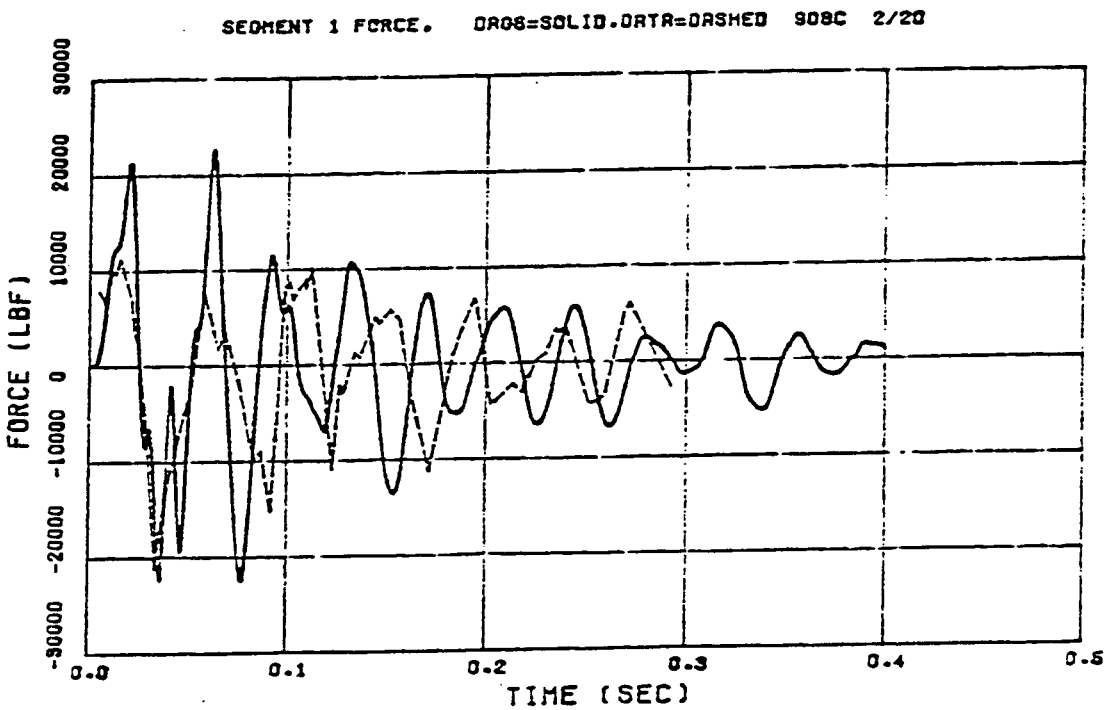

FIGURE 6-6. COMPARISON PLOT OF ITI/CE DAGS-CALCULATED SEGMENT 1 FORCE WITH EXPERIMENTAL DATA, TEST 908*

*Taken from Reference 15.

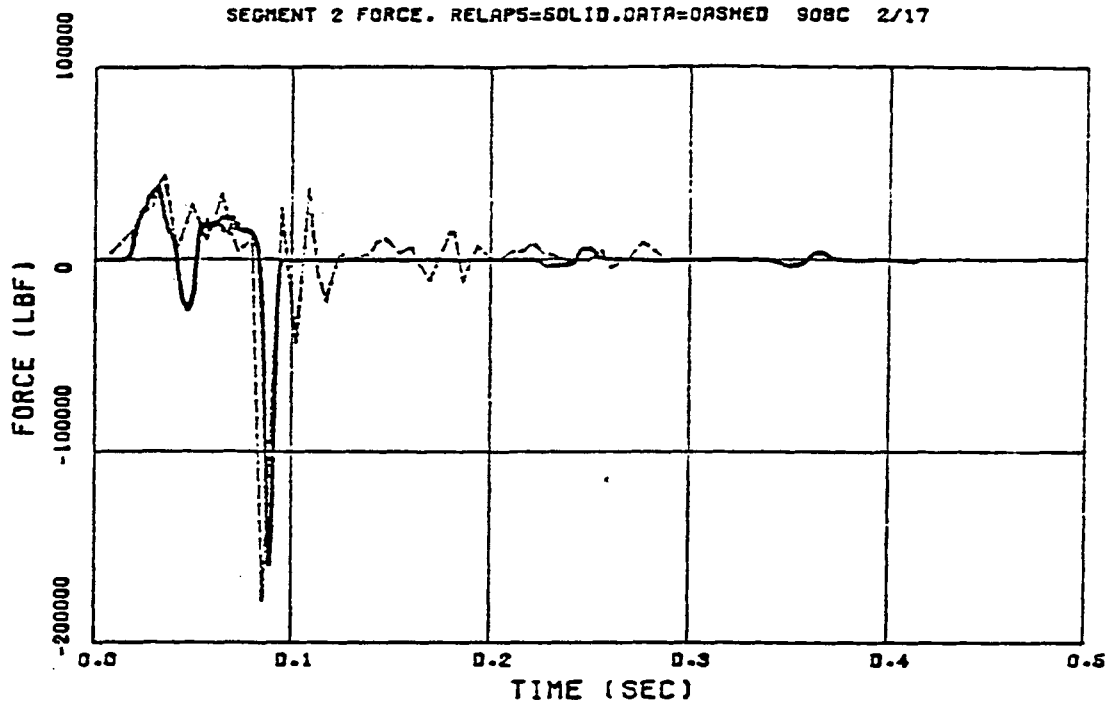

FIGURE 6-7. COMPARISON PLOT OF ITI RELAP5/MOD1-CALCULATED SEGMENT 2 FORCE WITH EXPERIMENTAL DATA, TEST 908*

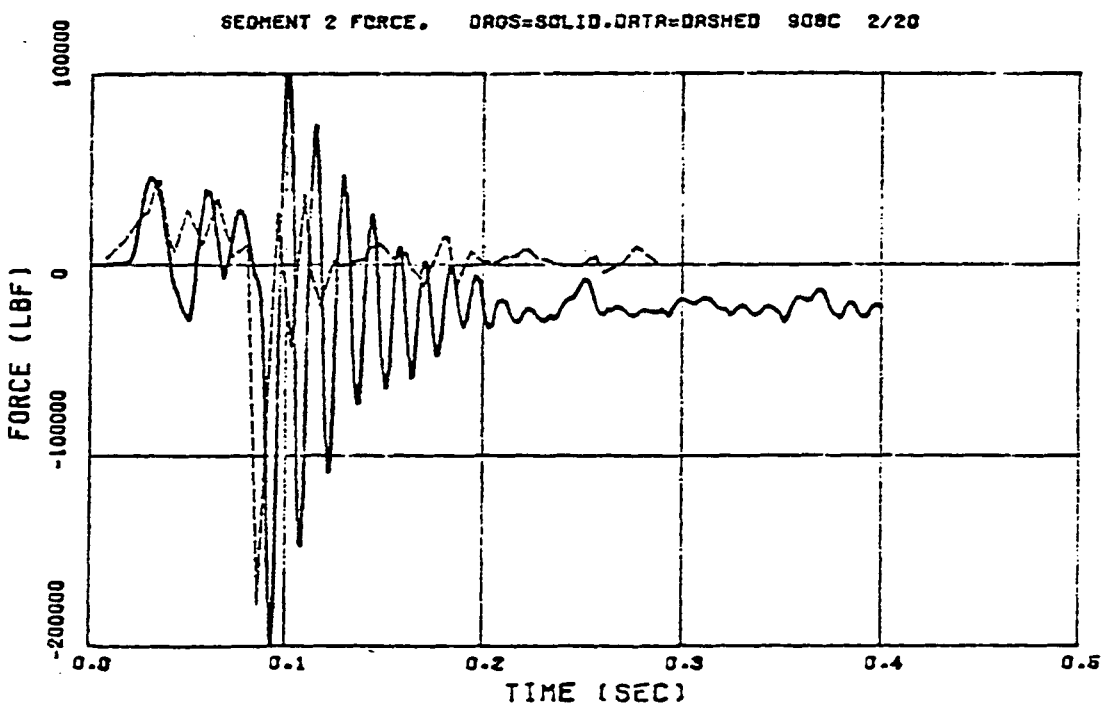

FIGURE 6-8. COMPARISON PLOT OF ITI/CE DAGS-CALCULATED SEGMENT 2 FORCE WITH EXPERIMENTAL DATA, TEST 908*

*Taken from Reference 15.

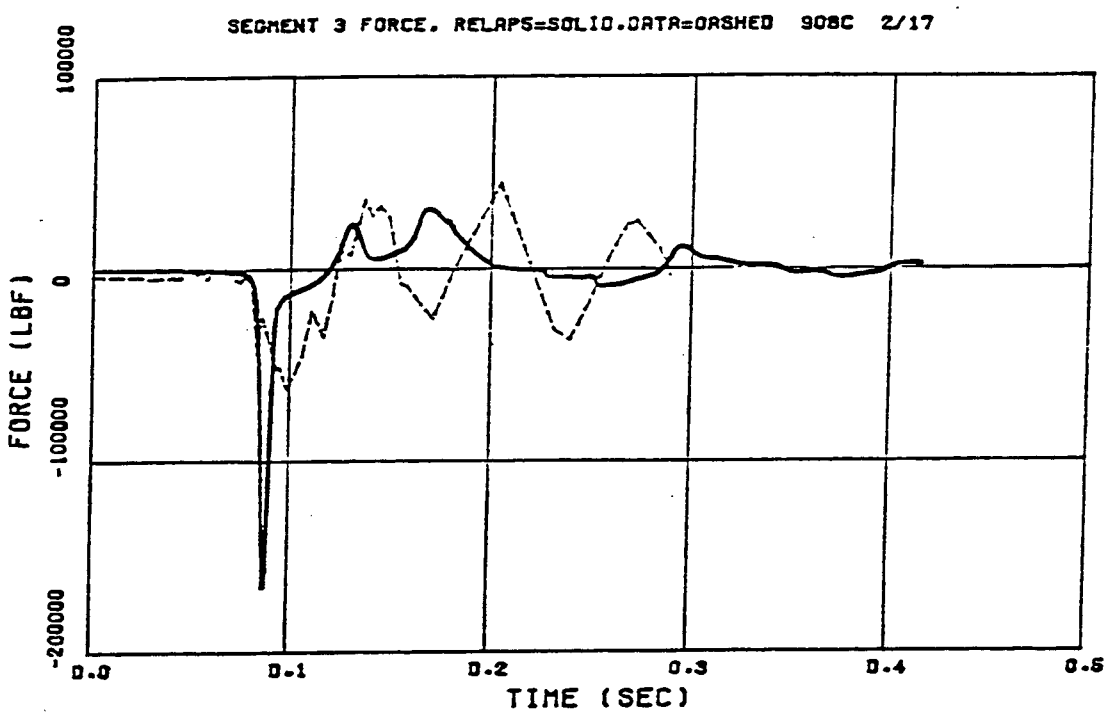

FIGURE 6-9. COMPARISON PLOT OF ITI RELAP5/MOD1-CALCULATED SEGMENT 3 FORCE WITH EXPERIMENTAL DATA, TEST 908*

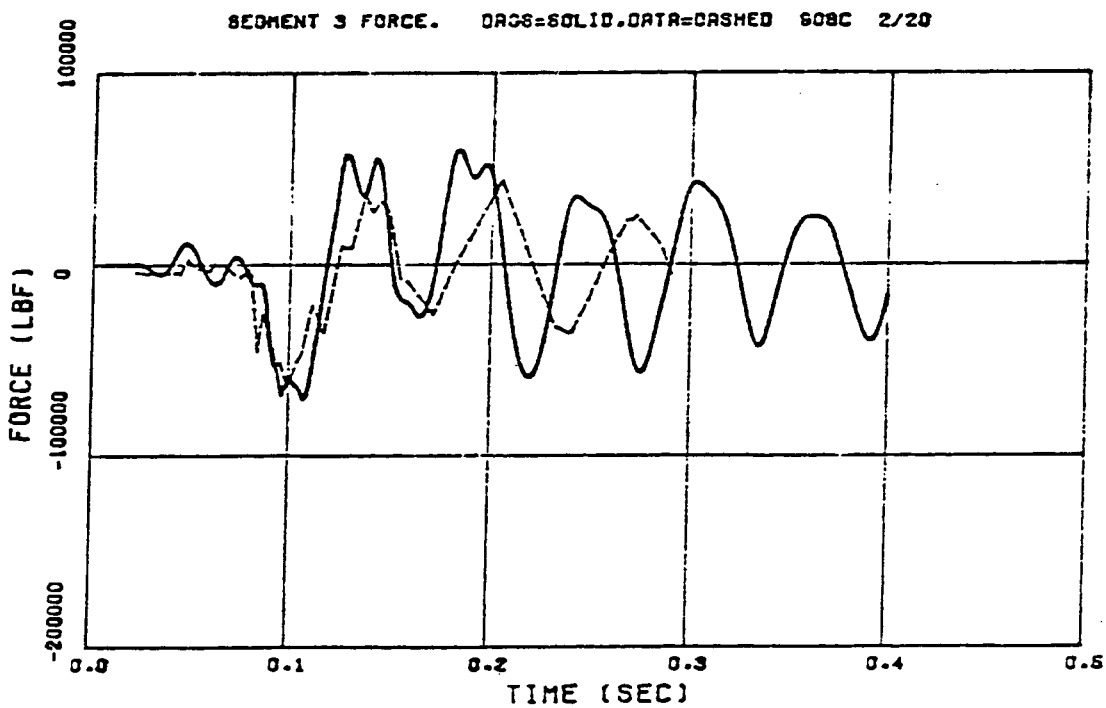

FIGURE 6-10. COMPARISON PLOT OF ITI/CE DAGS-CALCULATED SEGMENT 3 FORCE WITH EXPERIMENTAL DATA, TEST 908*

*Taken from Reference 15.

significant impact on the measured loads. The implication of this is that the measured loads at the CE test were actually a combination of the thermal/hydraulic loads and the structural response of the CE test facility. In all cases, once the structural response of the CE test facility was accounted for using the DAGS computer code, the RELAP5 prediction proved to be very good and in most cases RELAP5 predicted the peak load response without the DAGS interface.

In the course of the ITI investigations, several RELAP5 code modifications were made. Only one of these modifications was appropriate for use in the Kewaunee piping analysis. During the activation of a safety valve, the downstream air-water critical temperature can be exceeded. Modifications were made to RELAP5 to remove these programming limits. More information concerning this modification is given in Appendix A.

Several recommendations and conclusions were made by ITI. These are given in the following.

The capability of RELAP5/MOD1 for calculating the fluid-induced loads on piping downstream of safety and relief valves has been evaluated by comparing analytical results with test data from selected CE safety valve tests. The following conclusions were taken from the ITI evaluation (Reference 15).

(1) The RELAP5/MOD1 code can be used to calculate the transient thermal hydraulic processes which occur in the piping downstream of safety/relief valves following valve actuation. The code provided useful results for steam discharge, liquid-water discharge, and water-loop-seal-followed-by-steam discharge with downstream initial conditions of air and steam.

(2) RELAP5/MOD1-calculated parameters can be used as input for several calculational methods to provide useful engineering estimates of the hydrodynamic loads imposed on the discharge piping.

(3) The structural contribution to the measured experimental data must be taken into account when comparing calculated results with measured test data from the CE safety valve test facility.

(4) During this study it was observed that nodalization, time step selection, heat structure applications, and other code options can significantly affect computer running time.

(5) User input data and the selection of RELAP5/MOD1 code options can significantly affect calculated results. The following recommendations are offered in this regard.

(a) The nodalization of piping networks must be selected with the calculation of hydrodynamic forces in mind if results are to be used for that purpose. For steam discharge transients, the nodalization of short (less than 5 feet) piping lengths must include 8-10 control volumes to avoid underestimating hydrodynamic loads by more than 10 per cent. For water loop seal transients, the control volume size should be less than or equal to the water volume to avoid underestimation of loads due to numerical smearing.

(b) Estimation of the hydrodynamic loads for cases which involve a cold water (less than 212 F) loop seal, should be initialized with the loop seal water distributed in the first few control volumes downstream of the valve.

(c) For steam only discharge, piping heat transfer can significantly affect the thermal hydraulic behavior in the downstream piping. Best-estimate calculations of piping loads should include the effects of piping heat transfer. Computing costs can be reduced without changing results, by not using piping heat transfer at area changes.

(d) The alternate choking model in RELAP5/MOD1 should not be used in the discharge piping for relief and safety valve transient calculations.

6.2 QUALIFYING TEST AND TEST RESULTS

The post-processor computer code used on the Kewaunee plant specific analysis to convert the RELAP5 calculated parameters; i.e., pressures, velocities, densities, accelerations, etc., into thermal-hydraulic forces is the REPIPE post-processor (see Appendix B for discussion of this code).

The capabilities of RELAP5/REPIPE is demonstrated in this section. This was done to qualify modeling procedures which were used on the plant specific Kewaunee S/RV piping and to qualify the use of REPIPE for post-processor calculations.

Based on results of the ITI report (Reference 11) and CE test results, CE test 908 was chosen for comparison. This test is very representative of the Kewaunee pressurizer safety valve (PSV) and discharge piping configuration except for the following major differences.

(1) The valve orifice (i.e., valve flow area) for the Crosby 6M6 has approximately 21 per cent greater flow area than the Kewaunee Crosby $6M_1 6$ valve orifice (3.0 in^2 for M_1 orifice versus 3.64 in^2 for the M orifice).

(2) The loop seal water volume for test 908 was 1.18 ft^3 whereas the Kewaunee loop seal water volume is 0.7 ft^3. Therefore there is approximately 69 per cent more loop seal water in the tested 908 loop seal than in the Kewaunee loop seal.

(3) The Kewaunee plant specific safety valve plant specific discharge piping has shorter piping runs between the 90 degree elbows than the CE test facility discharge piping (see Figure 4-11 of Subsection 4.1.5).

The CE test 908 test results are presented in Appendix F and are given in Reference 15. In Appendix F, pressures and force measurements along with valve stem position and the venturi flow are presented. Basically the test results showed that the safety valve began to simmer when the accumulator tank 1 pressure (this tank at the CE test facility simulates the pressurizer) exceeded 2,580 psia. This simmering process took about 1.0 second. For test 908, the simmering time of the valve represents the clearing through the safety valve of the cold water in the loop seal. At approximately 34.3 seconds into the CE test 908 transient, the valve began to "pop" open. This popping process took about 0.012 second.

After the valve popped open, the saturated steam that passed through the safety valve from the accumulator tank 1, expanded behind the downstream water slug.

This expanding steam caused the water slug to accelerate through the downstream piping which created very large thermal-hydraulic forces on the piping system.

The largest of these forces was measured at W32 and W33 dynamic sensors for CE test 908. This peak load was measured to be 177,000 pounds and is shown in Appendix F for W32 and W33. This load is also shown in Figures 6-7 and 6-8 of this section.

6.3 RELAP5/REPIPE MODEL AND DESCRIPTIONS

A RELAP5/REPIPE model was developed to simulate CE test 908. Descriptions of RELAP5 and REPIPE are presented in Appendix A and B, respectively. A RELAP5 nodal diagram of CE test 908 is presented in Figure 6-11. A detailed description of the input parameters for this RELAP5 model is presented on Table 6-2.

6.3.1 Loop Seal Temperature Determination

Since the amount of subcooling in the loop seal is important for the determination of the downstream forces on the discharge piping, an evaluation of the temperature profile in the test 908 loop seal was made. EPRI (see References 15 and 19) provided outside thermocouple measurements of the loop seal. These measurements are presented in Figure 6-12. Since most of these measurements were made on the outside wall of the loop seal, an evaluation of the actual temperature profile for the water inside the pipe was made using the two-dimensional heat transfer code - TAC2D. A description of this code is given in Appendix C of this report.

The test 908 loop seal including piping steel thickness and ambient conditions was modeled using TAC2D to determine the actual temperature profile of the water in the test 908 loop seal piping. An illustration of the loop seal with the TAC2D mesh intervals indicated is presented in Figure 6-13. The TAC2D calculated results are presented in Table 6-3 and are shown in Figure 6-14.

The results of the TAC2D temperature profile calculation were integrated into the RELAP5 input by applying the appropriate water temperature to the appropriate RELAP5 control volume.

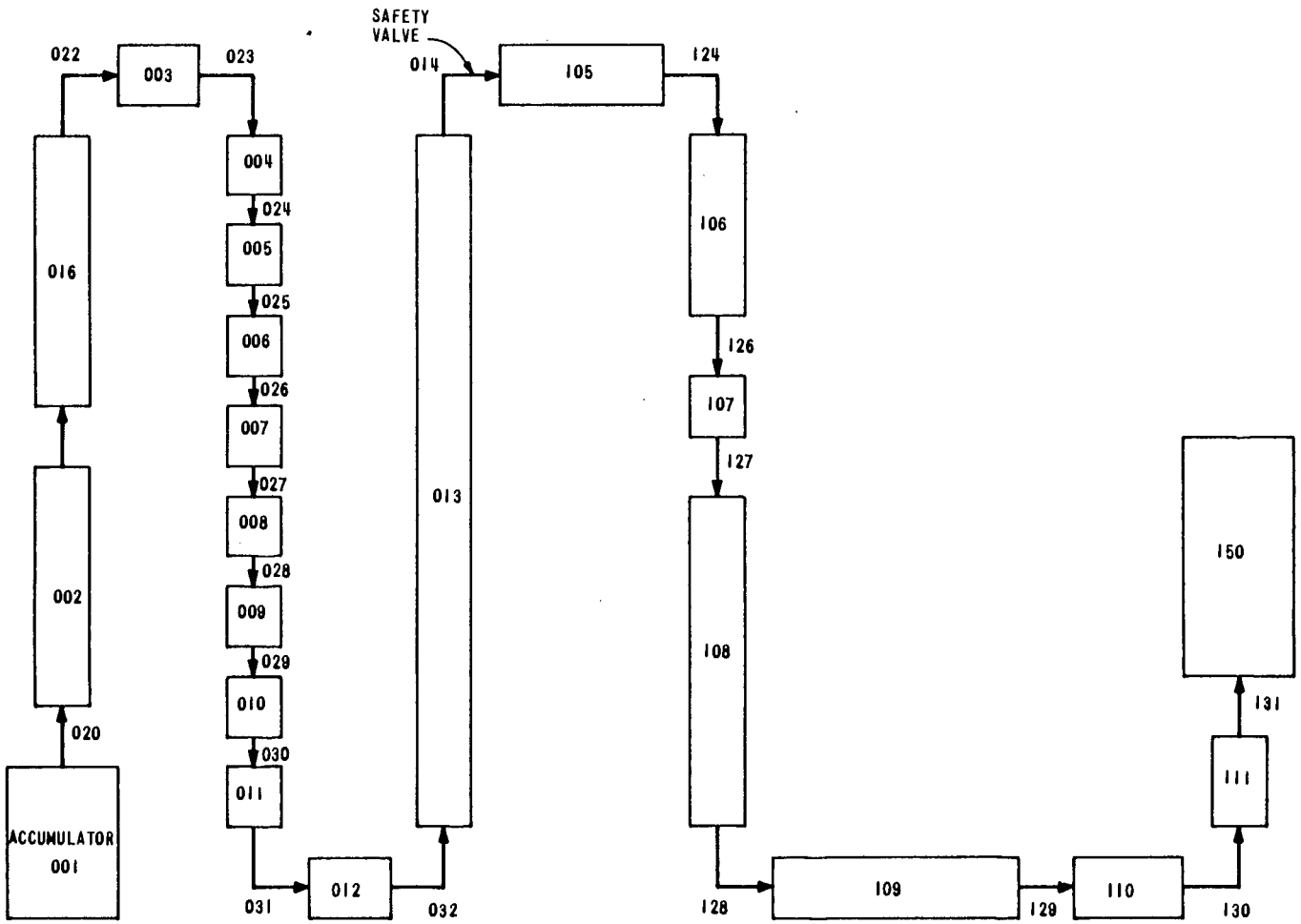

FIGURE 6-11

RELAP5 NODALIZATION OF THE CE TEST 908

TABLE 6-2. DOWNSTREAM PIPING DATA--CE TEST 908--WATER DOWNSTREAM*

Component	Component Type	Volume or Junction Number	Area sq ft	Length ft	Vertical Angle degrees	Initial Conditions**		Forward Loss	Reverse Loss	Description
001	TMDPVOL	V1	10.0	50.0	90.0	Table: Time - P - Q_S		--	--	Accumulator vessel volume = 500 cubic feet.
020***	SNGLJUN	J1	0.253	--	--	--		0.485	0.980	
002	PIPE	V1-2	0.253	1.629	90.0	P=2686.0	Q_S=1.0			Vertical segment from pressurizer.
		J1	0.253	--	--	--		0.0	0.0	
021	SNGLJUN	J1	0.144	--	--	--		0.103	0.114	Junction to venturi.
016	PIPE	V1-2	0.253	1.344	90.0	P=2686.0	Q_S=1.0	--	--	8-inch pipe into loop seal.
		J1	0.253	--	--	--		0.0	0.0	
022***	SNGLJUN	J1	0.131	--	--	--		0.188	0.231	8 by 6-inch reducer and first loop seal elbow.
003	PIPE	V1/J=0	0.131	1.745	0.0	P=2686.0	Q_S=1.0	--	--	Horizontal segment, top of loop seal.
023	SNGLJUN	J1	0.131	--	--	--		0.155	0.155	Second loop seal elbow.
004	PIPE	V1/J=0	0.131	0.326	-90.0	P=2686.0	Q_S=1.0	--	--	Vertical segment.
024	SNGLJUN	J1	0.131	--	--	--		0.0	0.0	
005	PIPE	V1/J=0	0.131	0.326	-90.0	P=2686.0	Q_S=1.0	--	--	Vertical segment.
025	SNGLJUN	J1	0.131	--	--	--		0.0	0.0	
006	PIPE	V1/J=0	0.131	0.326	-90.0	P=2686.0	Q_S=1.0	--	--	Vertical segment.
026	SNGLJUN	J1	0.131	--	--	--		0.0	0.0	
007	PIPE	V1/J=0	0.131	0.326	-90.0	P=2686.0	Q_S=1.0	--	--	Vertical segment.
027	SNGLJUN	J1	0.131	--	--	--		0.0	0.0	
008	PIPE	V1/J=0	0.131	0.326	-90.0	P=2686.0	Q_S=1.0	--	--	Vertical segment.
028	SNGLJUN	J1	0.131	--	--	--		0.0	0.0	
009	PIPE	V1/J=0	0.131	0.326	-90.0	P=2686.0	Q_S=1.0	--	--	Vertical segment.
029	SNGLJUN	J1	0.131	--	--	--		0.0	0.0	
010	PIPE	V1/J=0	0.131	0.326	-90.0	P=2686.0	Q_S=1.0	--	--	Vertical segment.
030	SNGLJUN	J1	0.131	--	--	--		0.0	0.0	
011	PIPE	V1/J=0	0.131	0.326	-90.0	P=2686.0	Q_S=1.0	--	--	Vertical segment.
031	SNGLJUN	J1	0.131	--	--	--		0.155	0.155	Third loop seal elbow.
012	PIPE	V1-3	0.131	0.785	0.0	P=2686.0	Q_S=1.0	--	--	Horizontal segment, bottom of loop seal.
		J1-2	0.131	--	--	--		0.0	0.0	
032	SNGLJUN	J1	0.131	--	--	--		0.155	0.155	Fourth loop seal elbow.

TABLE 6-2 (Continued). DOWNSTREAM PIPING DATA--CE TEST 908--WATER DOWNSTREAM

Component	Component Type	Volume or Junction Number	Area sq ft	Length ft	Vertical Angle degrees	Initial Conditions**			Forward Loss	Reverse Loss	Description
013	PIPE	V1-3	0.131	0.456	90.0	P=2686		Q_S=1.0	--	--	Vertical segment extending to S/RV.
		V4	0.131	0.456	90.0	P=2686	T=627		--	--	
		V5	0.131	0.456	90.0	P=2686	T=376		--	--	
		V6	0.131	0.456	90.0	P=2686	T=273		--	--	
		V7	0.131	0.456	90.0	P=2686	T=213		--	--	
		J1-6	0.131	--	--		--		0.0	0.0	
014***	VALVE-SRVVLV	J1	0.0182	--	--		--		0.9	0.9	S/RV.
105	PIPE	V1	0.201	0.669	0.0	P=14.7	T=165		--	--	Horizontal segment from S/RV to first elbow downstream.
		V2-3	0.201	0.653	0.0	P=14.7	T=132		--	--	
		V4	0.201	0.540	0.0	P=14.7	T=129.6		--	--	
		V5-8	0.201	0.551	0.0	P=14.7	T=117		--	--	
		J1-7	0.201	--	--		--		0.0	0.0	
124	SNGLJUN	J1	0.201	--	--		--		0.172	0.172	First elbow.
106	PIPE	V1-13	0.201	0.492	-90.0	P=14.7	T=80.0	Q_N=0.978	--	--	Vertical segment from first elbow to reducer.
		J1-12	0.201	--	--		--		0.0	0.0	
126	SNGLJUN	J1	0.201	--	--		--		0.0	0.0	
107	PIPE	V1	0.274	0.500	-90.0	P=14.7	T=80	Q_N=0.978	--	--	6 by 12-inch reducer.
		V2	0.347	0.448	-90.0	P=14.7	T=80	Q_N=0.978	--	--	
		V3	0.527	0.667	-90.0	P=14.7	T=80	Q_N=0.978	--	--	
		J1	0.274	--	--		--		0.033	0.026	
		J2	0.347	--	--		--		0.124	0.044	
127	SNGLJUN	J1	0.527	--	--		--		0.0	0.0	
108	PIPE	V1-29	0.706	0.508	-90.0	P=14.7	T=80	Q_N=0.978	--	--	Vertical segment from reducer to second elbow.
		J1-28	0.706	--	--		--		0.0	0.0	
128	SNGLJUN	J1	0.706	--	--		--		0.167	0.167	Second elbow.
109	PIPE	V1-20	0.706	1.515	0.0	P=14.7	T=80	Q_N=0.978	--	--	Horizontal segment from second elbow to gate valve mid-line.
		J1-19	0.706	--	--		--		0.0	0.0	
129	SNGLJUN	J1	0.706	--	--		--		0.15	0.15	

TABLE 6-2 (Continued). DOWNSTREAM PIPING DATA--CE TEST 908--WATER DOWNSTREAM

Component	Component Type	Volume or Junction Number	Area sq ft	Length ft	Vertical Angle degrees	Initial Conditions**			Forward Loss	Reverse Loss	Description
110	PIPE	V1-8	0.706	1.755	0.0	P=14.7	T=80	Q_N=0.978	--	--	Horizontal segment from gate valve mid-line to third elbow.
		J1-7	0.706	--	--		--		0.0	0.0	
130	SNGLJUN	J1	0.706	--	--		--		0.167	0.167	Third elbow.
111	PIPE	V1-2	0.706	0.583	0.0	P=14.7	T=80	Q_N=0.978	--	--	Vertical segment from third elbow to orifice.
		V3	0.559	0.583	0.0	P=14.7	T=80	Q_N=0.978	--	--	
		J1	0.706	--	--		--		0.0	0.0	
		J2	0.706	--	--		--				
131***	SNGLJUN	J1	0.083	--	--		--		1.29	1.29	Orifice.
150	TMDPVOL	V1	100.0	1.0E9	90.0	Table: Time - P - T - Q_N			--	--	Atmosphere.

*Assumptions: No choking was assumed to occur in pipe.
Wall friction was computed.
Nonequilibrium calculations were made (unequal phase temperatures).
Pipe roughness was assumed to be 0.00015.

**P = Pressure (psi)
T = Temperature (degrees F)
Q_N = Noncondensable quality (air)
Q_S = Static or equilibrium quality (steam)
Flag 2 has: P, Q_S
Flag 3 has: P, T
Flag 4 has: P, T, Q_N

***Abrupt area change is assumed for junction flag.

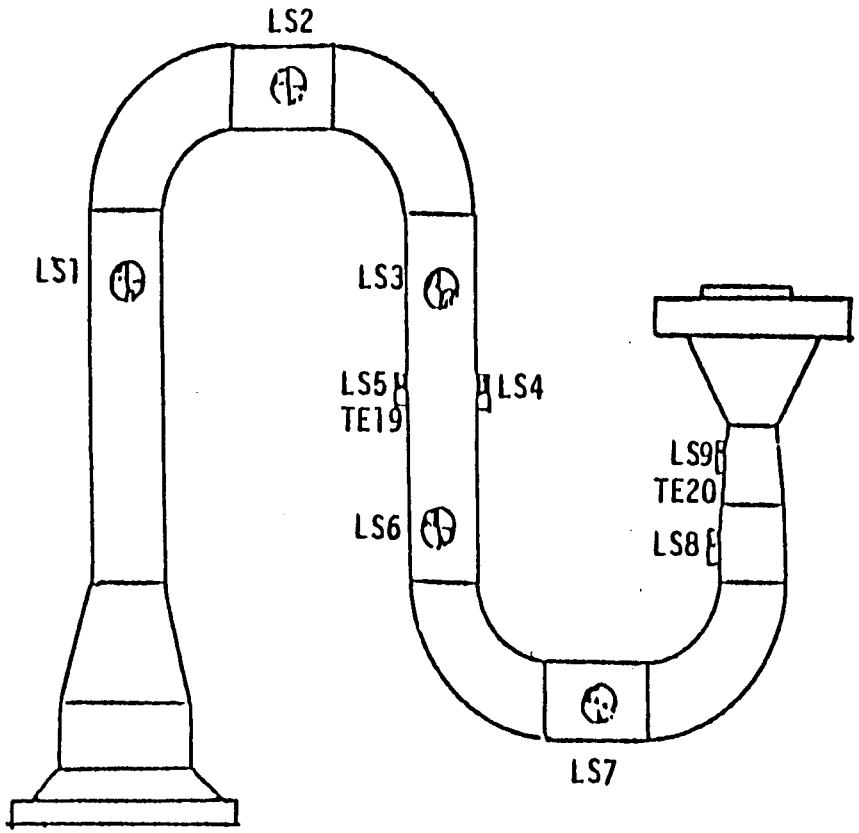

Outside Wall Temperatures

LS1 - 633.5°F
LS2 - 619.0°F
LS3 - 224.5°F
LS4 - 157.5°F
LS5 - 160.0°F
LS6 - 149.0°F
LS7 - 119.0°F
LS8 - 114.5°F
LS9 - 104.5°F

Fluid Temperatures

TE19 - 155°F
TE20 - 109°F

FIGURE 6-12
TEST 908 LOOP SEAL TEMPERATURE PROFILE*

*Taken from Reference 19

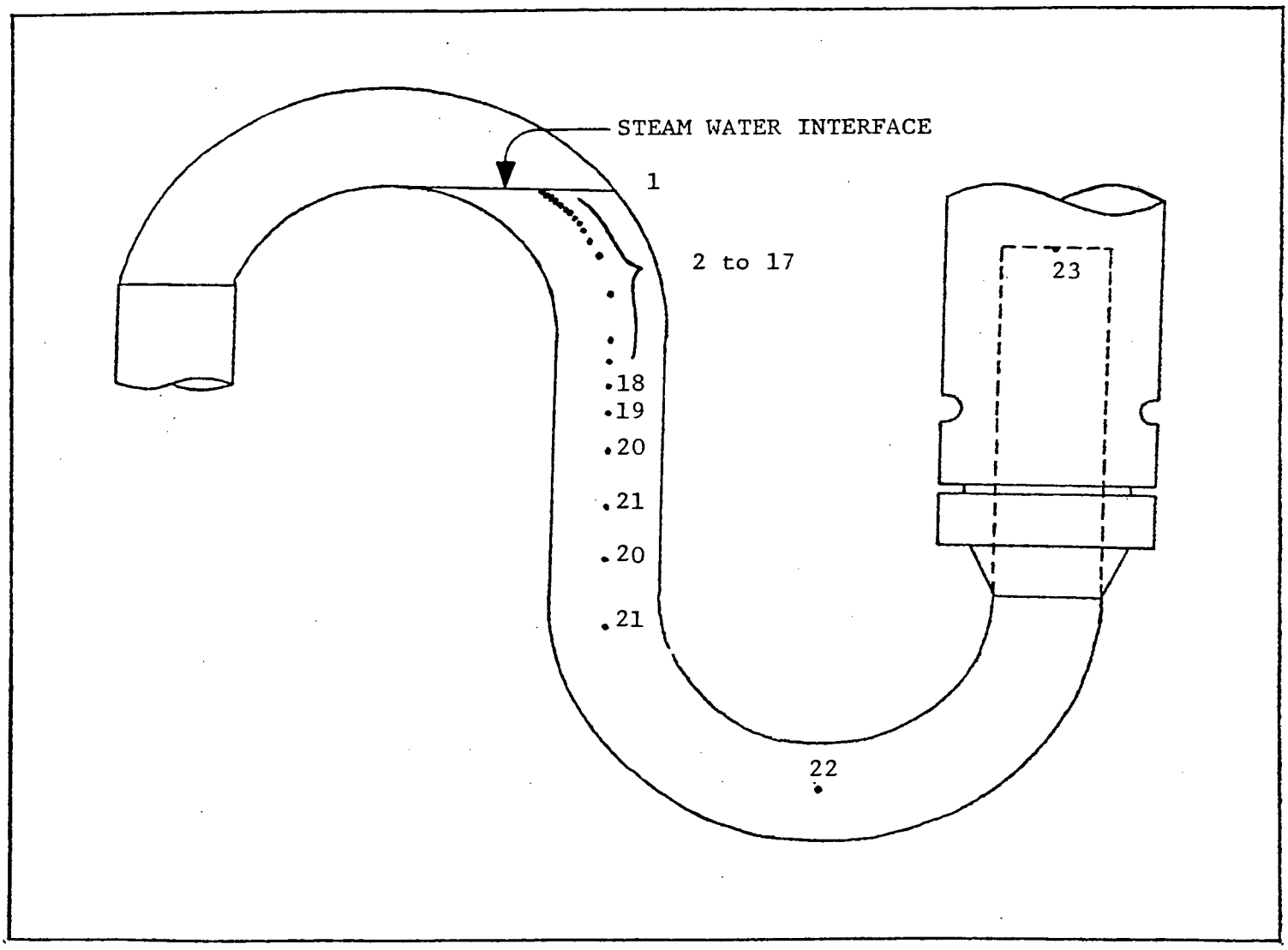

FIGURE 6-13
CE 908 LOOP SEAL TAC2D MESH

TABLE 6-3. CE 908 LOOP SEAL TEMPERATURE DISTRIBUTION AS CALCULATED WITH TAC2D

Node*	Distance** (ft)	Temperature (F)
1	.008	652
2	.025	645
3	.042	640
4	.058	635
5	.075	630
6	.094	625
7	.115	590
8	.135	568
9	.156	555
10	.188	530
11	.229	495
12	.292	450
13	.436	380
14	.604	325
15	.75	280
16	.938	248
17	1.146	210
18	1.458	180
19	1.875	155
20	2.292	140
21	2.708	130
22	3.790	115
23	8.160	102

*Refer to Figure 6-13.

**Measured from steam-water interface.

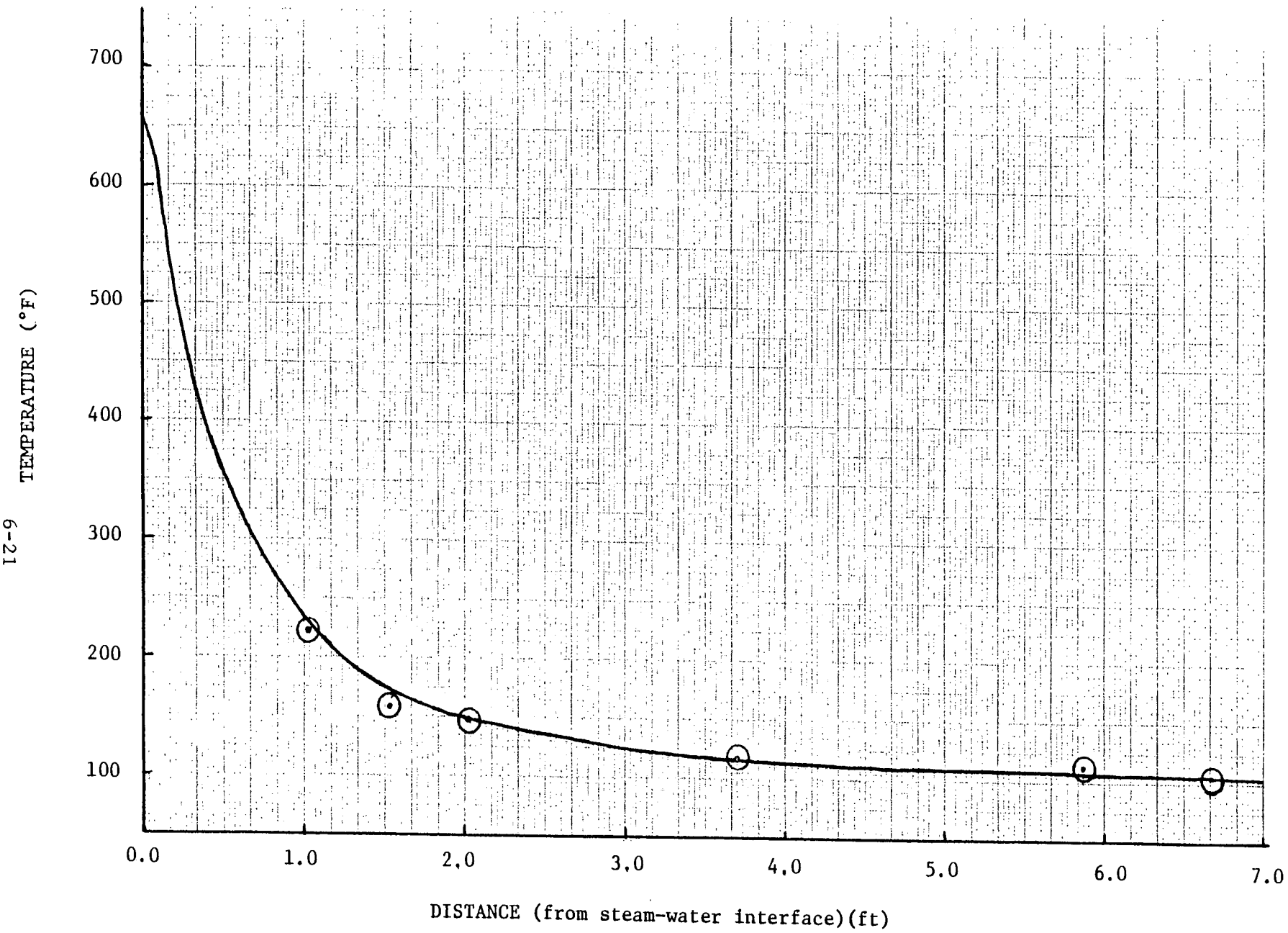

FIGURE 6-14
CE 908 LOOP SEAL WATER TEMPERATURE DISTRIBUTION
USING TAC2D

6.4 COMPARISONS BETWEEN CALCULATED AND TEST RESULTS

The RELAP5 model discussed in Subsection 6.3 was used to evaluate two situations for CE test 908.

The first RELAP5/REPIPE simulation was to assume that during the valve simmering time all subcooled water above 212 F was displaced as an intact water slug downstream of the safety valve. The second simulation was to "pop" the valve open with the water still in the loop seal, with only air at 82 F located downstream of the valve.

Since Segment 2 dynamic sensors (i.e., W32 and W33) produced the largest load reading for the CE test 908, Segment 2 loads will be the only loads presented for comparison.

As seen in Figures 6-15 and 6-16, RELAP5/REPIPE produced good peak load response agreement for both cases.

One can see that the upstream loop seal water case produced a delayed peak load. This is to be expected since in the actual testing most of the loop seal water did flow through the safety valve before the valve popped open.

The RELAP5/REPIPE results presented here demonstrate that the modeling methods used in this report for determining safety valve discharge piping loads are adequate to determine the Kewaunee plant specific piping loads.

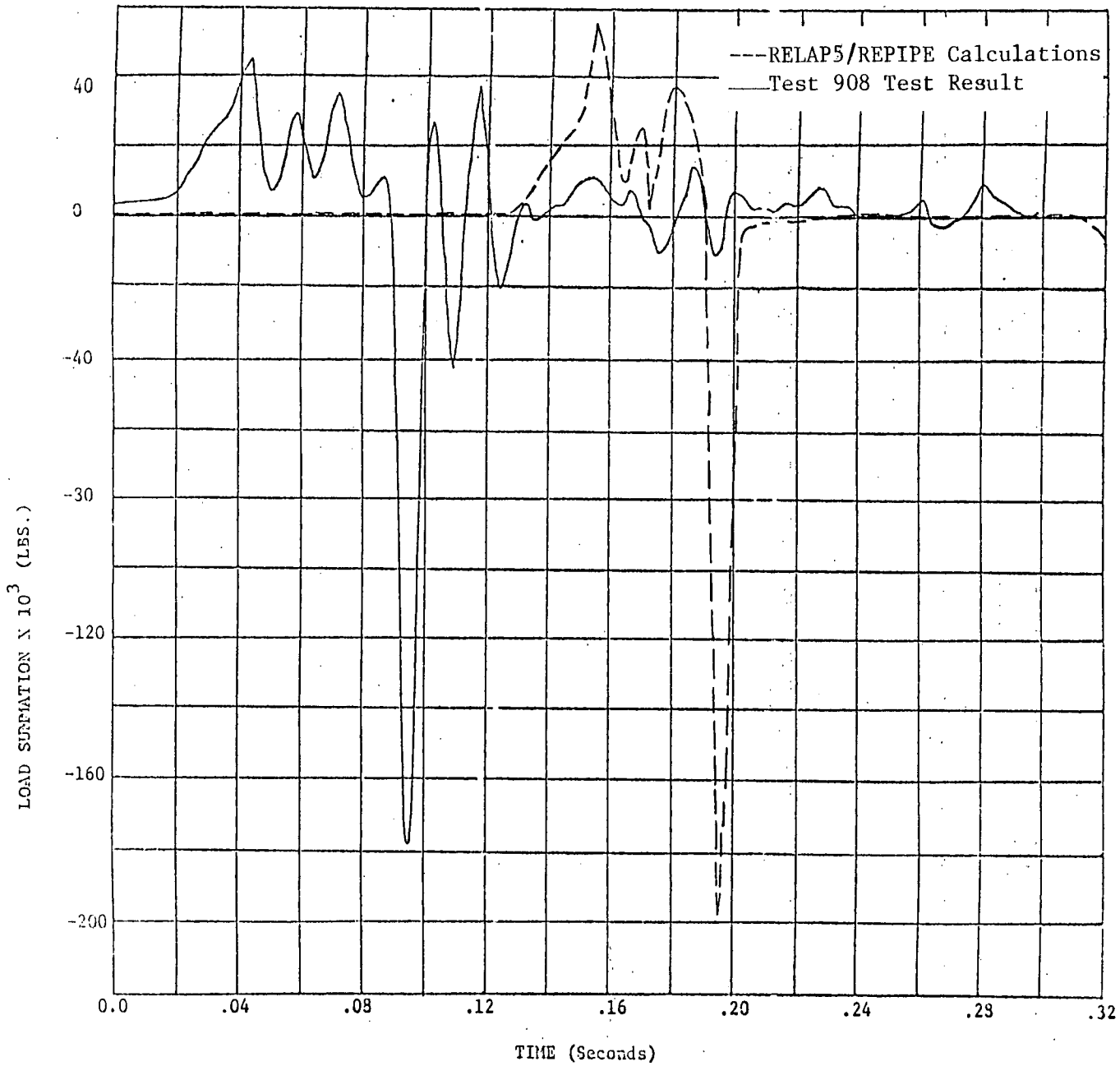

FIGURE 6-15
RELAP5/REPIPE CALCULATED RESULTS-WATER IN LOOP SEAL WHEN VALVE POPS-VERSUS CE TEST 908 RESULTS OF W32 AND W33*

*Test results taken from Reference 23

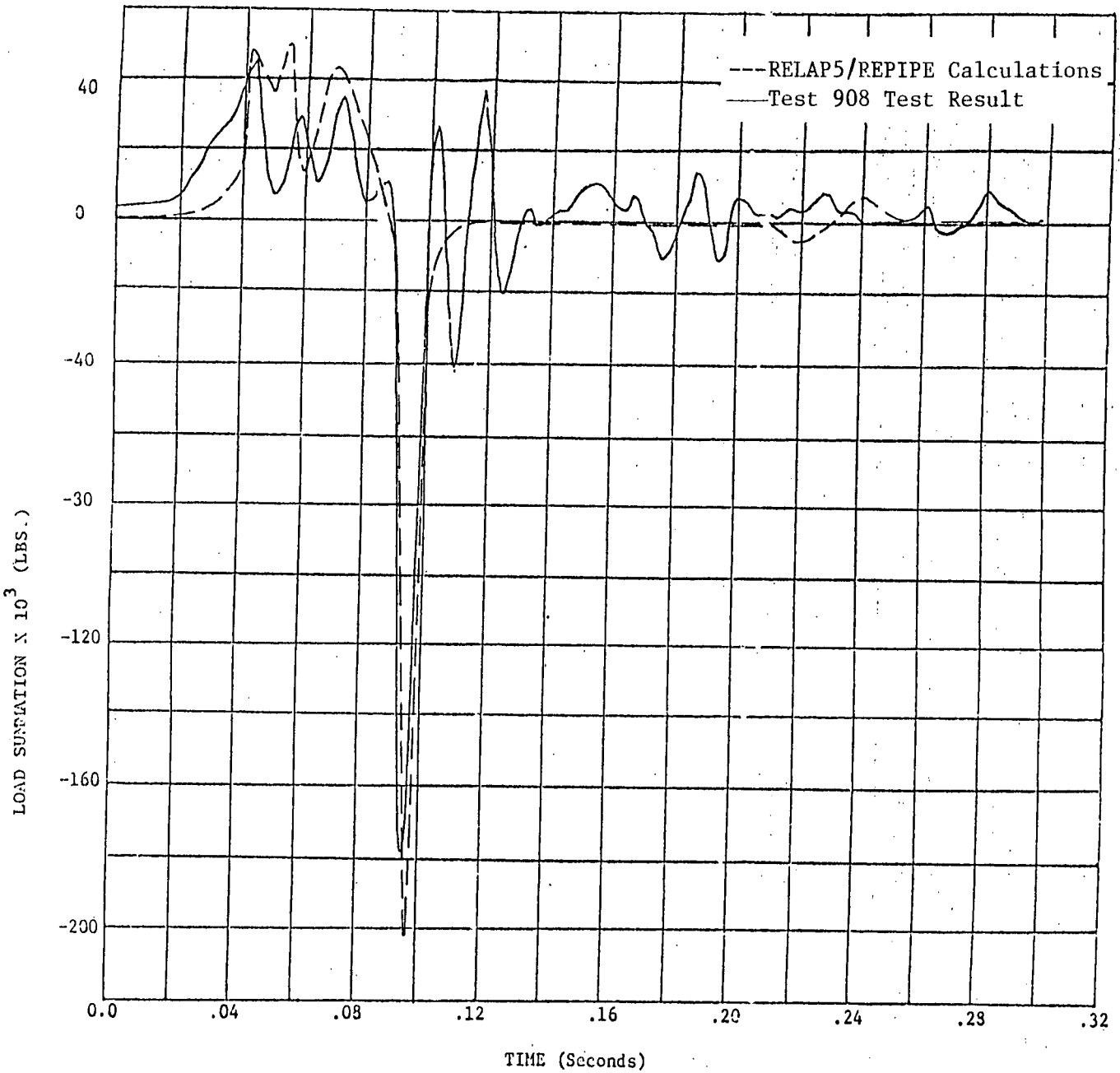

FIGURE 6-16
RELAP5/REPIPE CALCULATED RESULTS-WATER IN DOWNSTREAM PIPING WHEN VALVE POPS-VERSUS CE TEST 908 RESULTS OF W32 AND W33*

*Test results taken from Reference 23

7.0 DETERMINATION OF THE KEWAUNEE PLANT SPECIFIC PIPING LOADS

7.1 RELAP5 PLANT SPECIFIC MODELS FOR DETERMINATION OF PIPING LOADS

Detailed Kewaunee plant specific information concerning the safety and relief valves and the associated piping is presented in Section 3.0. This information was used to develop plant specific RELAP5 models of the Kewaunee safety and relief valve piping network. Four cases were considered: (1) the activation of two-safety valves simultaneously without the activation of the relief valves, (2) the activation of one-safety valve only, (3) the activation of one-safety valve and one-relief valve and (4) the activation of two-relief valves.

The RELAP5 nodal diagram and associated input information for the double safety valve actuation simulation are presented in Figure 7-1 and Table 7-1, respectively.

The RELAP5 nodal diagram and associated input information for the single safety valve actuation simulation are presented in Figure 7-2 and Table 7-2, respectively.

The RELAP5 nodal diagram and associated input information for the single safety-single relief valve actuation simulation are presented in Figure 7-3 and Table 7-3, respectively.

The RELAP5 nodal diagram and associated input information for the double-relief valve actuation simulation are presented in Figure 7-4 and Table 7-4, respectively.

7.1.1 Kewaunee Loop Seal Temperature Determination

As noted in Subsection 6.3.1, the amount of subcooling in the loop seal can be an important factor in determining the downstream forces on the discharge piping. Therefore the two-dimensional heat transfer computer code, TAC2D, was used to determine the temperature variation in the Kewaunee loop seal.

The Kewaunee safety valve loop seal was modeled using TAC2D to determine the actual temperature profile of the water in the Kewaunee loop seal. Important parameters used in the TAC2D analysis are presented in Table 7-5. An illustration of the Kewaunee loop seal with the TAC2D mesh intervals

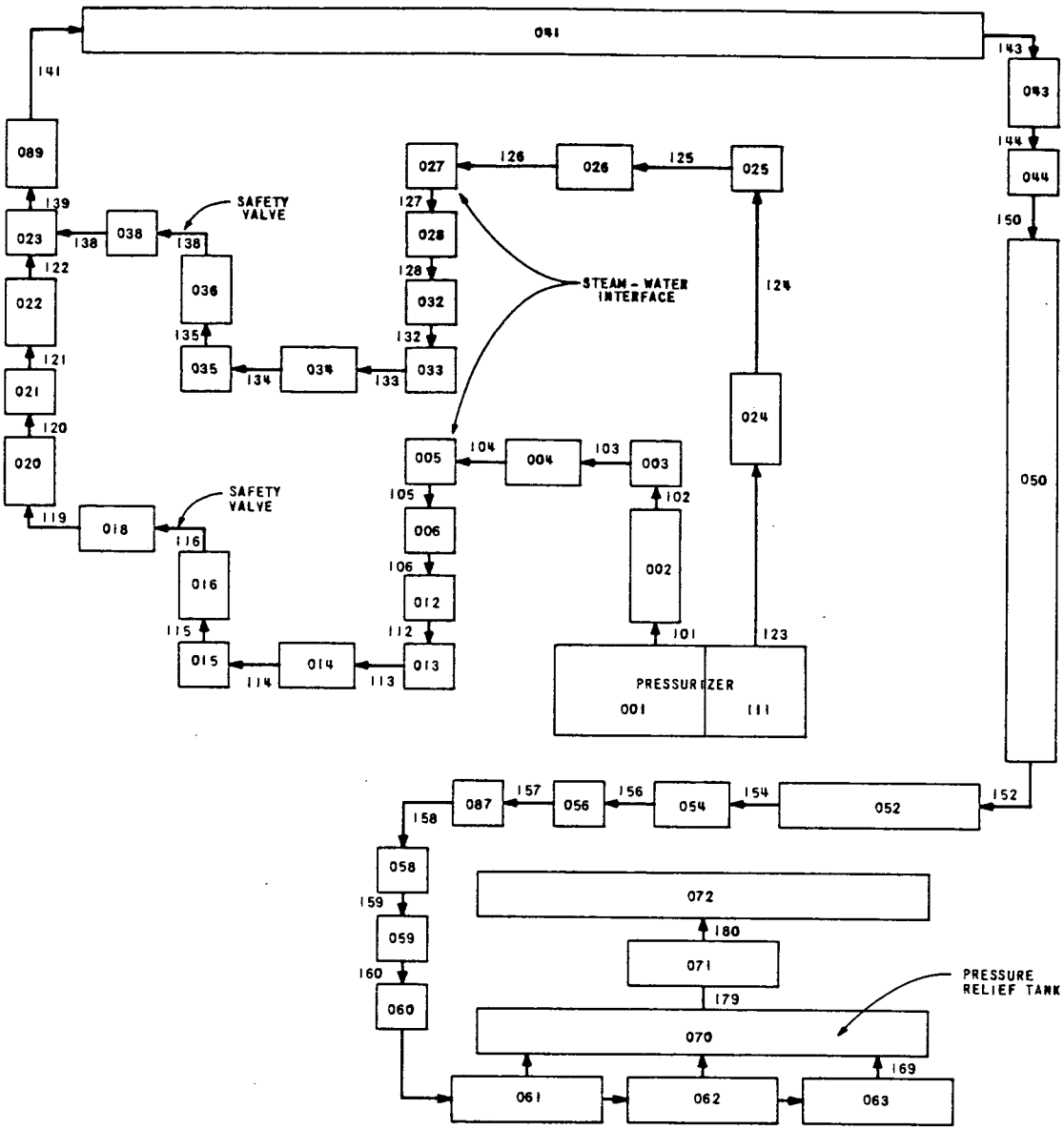

FIGURE 7-1
RELAP5 NODALIZATION FOR KEWAUNEE TWO-SAFETY VALVE SIMULATION

TABLE 7-1. RELAP5 INPUT PARAMETERS FOR THE KEWAUNEE TWO-SAFETY VALVE SIMULATION

Component	Component Type	Volume or Junction Number	Area sq ft	Length ft	Vertical Angle degrees	Initial Conditions**		Forward Loss	Reverse Loss	Description
001	TMDPVOL	V1	38.48	25.98	90.0	Table: Time - P - Q_S		--	--	Pressurizer Vessel - Volume = 1,000 cu ft.
101***	SNGLJUN	J1	0.147	--	--	--		.594	.992	
002	PIPE	V1-3	0.147	1.074	90.0	P=2686.0	Q_S=1.0	--	--	Vertical pipe from pressurizer to first loop seal elbow volume (Loop Seal A).
		J1-2	0.147	--	--	--		0.0	0.0	
102	SNGLJUN	J1	0.147	--	--	--		0.0	0.0	
003	SNGLVOL	V1	0.147	0.785	0.0	P=2686.0	Q_S=1.0	--	--	First loop seal elbow volume.
103	SNGLJUN	J1	0.147	--	--	--		0.195	0.195	First elbow junction.
004	PIPE	V1	0.147	0.584	0.0	P=2686.0	Q_S=1.0	--	--	Horizontal segment from first to second loop seal elbow volumes.
104	SNGLJUN	J1	0.147	--	--	--		0.0	0.0	
005	SNGLVOL	V1	0.147	0.594	0.0	P=2686.0	Q_S=1.0	--	--	Second loop seal elbow volume.
105	SNGLJUN	J1	0.147	--	--	--		0.160	0.160	Second elbow junction (steam/water interface).
006	SNGLVOL	V1	0.147	0.511	-90.0	P=2686.0	Q_S=1.0	--	--	Vertical loop seal segment.
106	SNGLJUN	J1	0.147	--	--	--		0.0	0.0	
012	SNGLVOL	V1	0.147	0.511	-90.0	P=2686.0	Q_S=1.0	--	--	Vertical loop seal segment.
112	SNGLJUN	J1	0.147	--	--	--		0.0	0.0	
013	SNGLVOL	V1	0.147	0.589	0.0	P=2686.0	Q_S=1.0	--	--	Third loop seal elbow volume.
113	SNGLJUN	J1	0.147	--	--	--		0.160	0.160	Third elbow junction.
014	PIPE	V1-2	0.147	0.536	0.0	P=2686.0	Q_S=1.0	--	--	Horizontal pipe from third to fourth loop seal elbow volumes.
		J1	0.147	--	--	--		0.0	0.0	
114	SNGLJUN	J1	0.147	--	--	--		0.0	0.0	
015	SNGLVOL	V1	0.147	0.589	0.0	P=2686.0	T=275.0	--	--	Fourth loop seal elbow volume.
115	SNGLJUN	J1	0.147	--	--	--		0.160	0.160	Fourth elbow junction.
016	PIPE	V1-2	0.147	0.465	90.0	P=2686.0	T=125.6	--	--	Vertical loop seal segment upstream from S/RV.
		J1	0.147	--	--	--		0.0	0.0	
116***	VALVE-SRVVLV	J1	0.017	--	--	--		0.9	0.9	S/RV.
018	PIPE	V1-4	0.201	0.500	0.0	P=14.7	T=120			Horizontal segment downstream from S/RV.
		J1-3	0.201	--	--	--		0.0	0.0	

TABLE 7-1 (Continued). RELAP5 INPUT PARAMETERS FOR THE KEWAUNEE TWO-SAFETY VALVE SIMULATION

Component	Component Type	Volume or Junction Number	Area sq ft	Length ft	Vertical Angle degrees	Initial Conditions**			Forward Loss	Reverse Loss	Description
119	SNGLJUN	J1	0.201	--	--		--		0.172	0.172	First elbow downstream from S/RV.
020	PIPE	V1-2	0.201	0.605	0.0	P=14.7	T=120	Q_N=.948	--	--	Horizontal pipe from first elbow to reducer.
		V3-11	0.201	0.512	0.0	P=14.7	T=120	Q_N=.948	--	--	
		J1-10	0.201	--	--		--		0.0	0.0	
120	SNGLJUN	J1	0.201	--	--				0.0	0.0	Junction at 6 inch end of reducer.
021	SNGLVOL	V1	0.375	0.500	0.0	P=14.7	T=120	Q_N=.948	--	--	Reducer (6 by 10 inches).
121	SNGLJUN	J1	0.375	--	--		--		0.0	0.0	Junction at 10 inch end of reducer.
022	PIPE	V1-3	0.548	0.577	0.0	P=14.7	T=120	Q_N=.948	--	--	Horizontal segment downstream from reducer.
		J1-2	0.548	--	--		--		0.0	0.0	
122	SNGLJUN	J1	0.548	--	--		--		0.0	0.0	
023	BRANCH	V1	0.548	0.500	0.0	P=14.7	T=120	Q_N=.948	--	--	
		J=0									
139	SNGLJUN	J1	0.548	--	--		--		0.0	0.0	
039	PIPE	V1-5	0.548	0.576	0.0	P=14.7	T=120	Q_N=.948	--	--	Horizontal segment upstream of second elbow.
		J1-4	0.548	--	--		--		0.0	0.0	
141	SNGLJUN	J1	0.548	--	--		--		0.172	0.172	Second elbow in downstream piping.
041	PIPE	V1-6	0.548	0.994	0.0	P=14.7	T=120	Q_N=.948	--	--	Horizontal pipe between second and third elbows.
		J1-5	0.548	--	--		--		0.0	0.0	
143	SNGLJUN	J1	0.548	--	--		--		0.172	0.172	Third elbow in downstream piping.
043	PIPE	V1-3	0.548	0.876	-90.0	P=14.7	T=120	Q_N=.948	--	--	
		J1-2	0.548	--	--		--		0.0	0.0	Vertical segment.
144	SNGLJUN	J1	0.548	--	--		--		0.0	0.0	
044	SNGLVOL	V1	0.548	1.0	-90.0	P=14.7	T=120	Q_N=.948	--	--	Vertical segment.
150	SNGLJUN	J1	0.548	--	--		--		0.0	0.0	
111	TMDPVOL	V1	38.48	25.98	90.0	Table:	Time - P - Q_S		--	--	Pressurizer Vessel - Volume = 1,000 cu ft
123***	SNGLJUN	J1	0.147	--	--		--		.594	.992	
024	PIPE	V1-3	0.147	1.074	90.0	P=2686.0		Q_S=1.0	--	--	Vertical pipe from pressurizer to first loop seal elbow volume (Loop Seal B).
		J1-2	0.147	--	--		--		0.0	0.0	

TABLE 7-1 (Continued). RELAP5 INPUT PARAMETERS FOR THE KEWAUNEE TWO-SAFETY VALVE SIMULATION

Component	Component Type	Volume or Junction Number	Area sq ft	Length ft	Vertical Angle degrees	Initial Conditions**			Forward Loss	Reverse Loss	Description
124	SNGLJUN	J1	0.147	--	--		--		0.0	0.0	
025	SNGLVOL	V1	0.147	0.785	0.0	P=2686.0		Q_S=1.0	--	--	First loop seal elbow volume.
125	SNGLJUN	J1	0.147	--	--		--		0.195	0.195	First elbow junction.
026	PIPE	V1	0.147	0.584	0.0	P=2686.0		Q_S=1.0	--	--	Horizontal segment from first to second loop seal elbow volumes.
126	SNGLJUN	J1	0.147	--	--		--		0.0	0.0	
027	SNGLVOL	V1	0.147	0.594	0.0	P=2686.0		Q_S=1.0	--	--	Second loop seal elbow volume.
127	SNGLJUN	J1	0.147	--	--		--		0.160	0.160	Second elbow junction (steam/water interface).
028	SNGLVOL	V1	0.147	0.511	-90.0	P=2686.0	T=476		--	--	Vertical loop seal segment.
128	SNGLJUN	J1	0.147	--	--		--		0.0	0.0	
032	SNGLVOL	V1	0.147	0.511	-90.0	P=2686.0	T=476		--	--	Vertical loop seal segment.
132	SNGLJUN	J1	0.147	--	--		--		0.0	0.0	
033	SNGLVOL	V1	0.147	0.589	0.0	P=2686.0	T=476		--	--	Third loop seal elbow volume.
133	SNGLJUN	J1	0.147	--	--		--		0.160	0.160	Third elbow junction.
034	PIPE	J1-2	0.147	0.589	0.0	P=2686.0	T=476		--	--	Horizontal pipe from third to fourth loop seal elbow volumes.
		J1	0.147	--	--		--		0.0	0.0	
134	SNGLJUN	J1	0.147	--	--		--		0.0	0.0	
035	SNGLVOL	V1	0.147	0.589	0.0	P=2686.0	T=476		--	--	Fourth loop seal elbow volume.
135	SNGLJUN	J1	0.147	--	--		--		0.160	0.160	Fourth elbow junction.
036	PIPE	V1-2	0.147	0.400	90.0	P=2686.0	T=476		--	--	Vertical loop seal segment upstream from S/RV.
		J1	0.147	--	--		--		0.0	0.0	
136***	VALVE-SRVVLV	J1	0.017	--	--		--		0.9	0.9	S/RV.
038	PIPE	V1-4	0.201	0.500	0.0	P=14.7	T=120	Q_N=.948			Horizontal segment downstream from S/RV.
		J1-3	0.201	--	--		--		0.0	0.0	
138	SNGLJUN	J1	0.201	--	--		--		0.0	0.0	Junction to branch component.
050	PIPE	V1-35	0.548	1.508	-90.0	P=14.7	T=120	Q_N=.948	--	--	
		J1-34	0.548	--	--		--		0.0	0.0	Vertical segment to fourth elbow.
152	SNGLJUN	J1	0.548	--	--		--		0.172	0.172	Fourth elbow in downstream piping.

TABLE 7-1 (Continued). RELAP5 INPUT PARAMETERS FOR THE KEWAUNEE TWO-SAFETY VALVE SIMULATION

Component	Component Type	Volume or Junction Number	Area sq ft	Length ft	Vertical Angle degrees	Initial Conditions**			Forward Loss	Reverse Loss	Description
052	PIPE	V1-15	0.548	2.094	0.0	P=14.7	T=120	Q_N=.948	--	--	Horizontal segment.
		J1-14	0.548	--	--		--		0.0	0.0	
154	SNGLJUN	J1	0.548	--	--		--		0.060	0.060	16.6 degree bend in downstream piping.
054	PIPE	V1-3	0.548	2.327	0.0	P=14.7	T=120	Q_N=.948	--	--	Horizontal segment.
		J1-2	0.548	--	--		--		0.0	0.0	
156	SNGLJUN	J1	0.548	--	--		--		0.172	0.172	Fifth elbow in downstream piping.
056	SNGLVOL	V1	0.548	3.332	-45.0	P=14.7	T=120	Q_N=.948	--	--	Volume from relief tank orifice to air/water interface within tank discharge pipe.
157	SNGLJUN	J1	0.548	--	--		--		0.0	0.0	Air/water interface within tank discharge pipe.
057	SNGLVOL	V1	0.548	2.000	-45.0	P=14.7	T=120		--	--	Volume below water surface to 45 degree bend in relief tank.
158	SNGLJUN	J1	0.548	--	--		--		0.103	0.103	45 degree bend in relief tank discharge pipe.
058	SNGLVOL	V1	0.548	1.650	-90.0	P=14.7	T=120		--	--	
159	SNGLJUN	J1	0.548	--	--		--		0.0	0.0	Vertical segment of discharge pipe.
059	SNGLVOL	V1	0.548	1.500	-90.0	P=14.7	T=120		--	--	
160	SNGLJUN	J1	0.548	--	--		--		0.172	0.172	90 degree bend in relief tank discharge pipe.
060	SNGLVOL	V1	0.548	1.500	0.0	P=14.7	T=120		0.0	0.0	Bend volume.
061***	BRANCH	V1	0.548	4.080	0.0	P=14.7	T=120		--	--	Horizontal discharge pipe.
		J1	0.548	--	--		--		0.0	0.0	
		J2	0.273	--	--		--		0.0	0.0	
		J3	0.548	--	--		--		0.0	0.0	
062***	BRANCH	V1	0.548	4.080	0.0	P=14.7	T=120		--	--	Horizontal discharge pipe.
		J1	0.273	--	--		--		0.0	0.0	
		J2	0.548	--	--		--		0.0	0.0	
063	SNGLVOL	V1	0.548	4.080	0.0	P=14.7	T=120		--	--	Horizontal discharge pipe.
169***	SNGLJUN	J1	0.285	--	--		--		0.0	0.0	
070	BRANCH	V1	106.65	5.629	90.0	P=14.7	T=120		--	--	Volume of water in 75 per cent full relief tank.
		J=0	--	--	--		--		--	--	

TABLE 7-1 (Continued). RELAP5 INPUT PARAMETERS FOR THE KEWAUNEE TWO-SAFETY VALVE SIMULATION

Component	Component Type	Volume or Junction Number	Area sq ft	Length ft	Vertical Angle degrees	Initial Conditions**			Forward Loss	Reverse Loss	Description
179	SNGLJUN	J1	106.6	--	--		--		0.0	0.0	Air/water interface within relief tank.
071	SNGLVOL	V1	106.6	1.876	90.0	P=14.7	T=120	Q_N=.948	--	--	Volume of air in 75 per cent full relief tank.
180***	VALVE-TRPVLV	J1	0.548	--	--		--		0.0	0.0	Rupture disk trips when P > 85.0 psi.
072	TMDPVOL	V1	30.0	1.0×10^{20}	90.0	P=14.7	T=82	Q_N=.983	--	--	Atmosphere.

*Assumptions: No choking was assumed to occur in pipe.
Wall friction was computed.
Nonequilibrium calculations were made (unequal phase temperatures).
Pipe roughness was assumed to be 0.00015.

**P = Pressure (psi)
T = Temperature (degrees F)
Q_N = Noncondensable quality (air)
Q_S = Static or equilibrium quality (steam)
Flag 2 has: P, Q_S
Flag 3 has: P, T
Flag 4 has: P, T, Q_N

***Abrupt area change is assumed for junction flag.

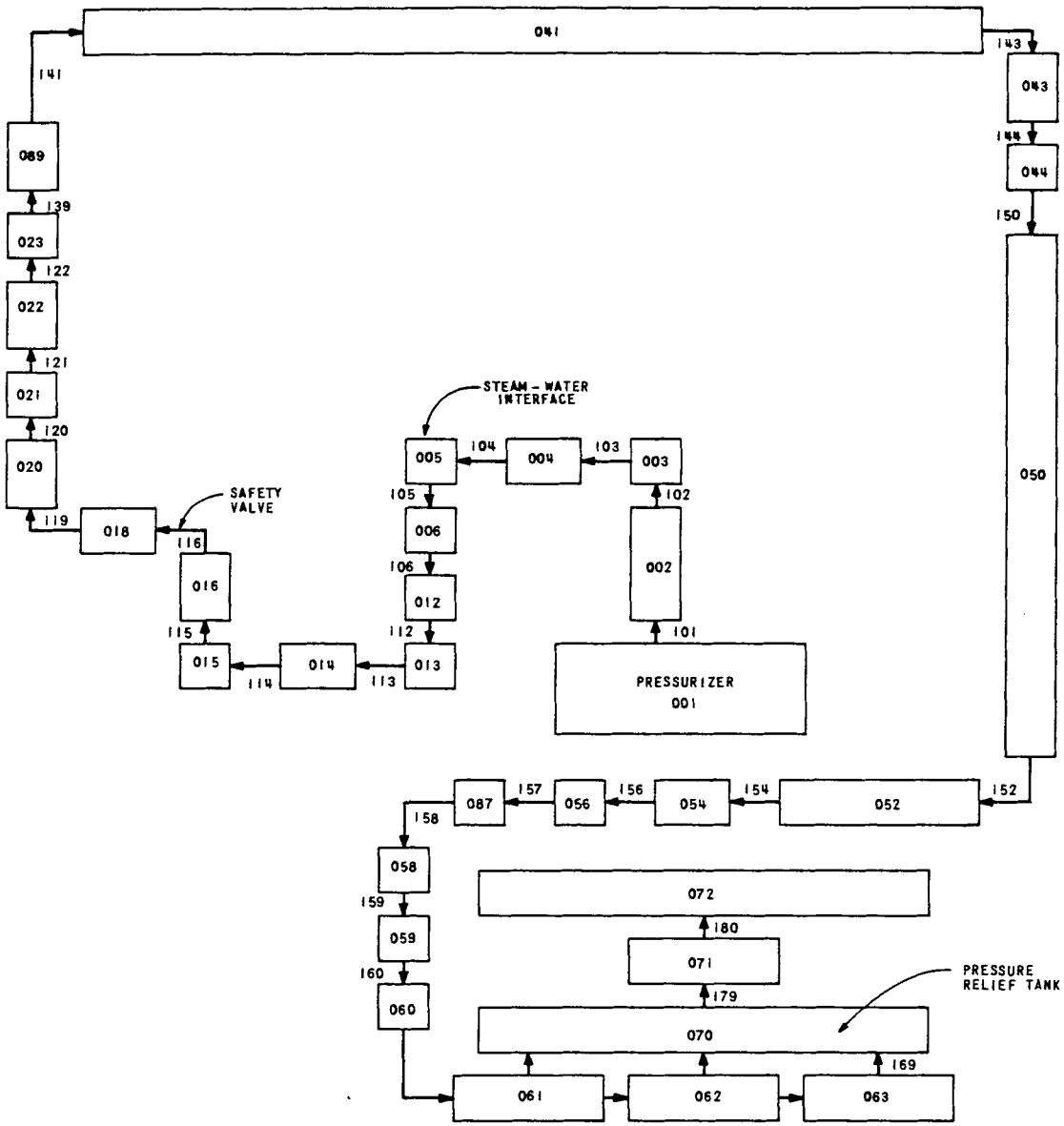

FIGURE 7-2
RELAP5 NODALIZATION FOR
KEWAUNEE ONE-SAFETY VALVE
SIMULATION

TABLE 7-2. RELAP5 INPUT PARAMETERS FOR THE KEWAUNEE ONE-SAFETY VALVE SIMULATION

Component	Component Type	Volume or Junction Number	Area sq ft	Length ft	Vertical Angle degrees	Initial Conditions**	Forward Loss	Reverse Loss	Description
001	TMDPVOL	V1	38.48	25.98	90.0	Table: Time - P - Q_S	--	--	Pressurizer Vessel - Volume = 1,000 cu ft.
101***	SNGLJUN	J1	0.147	--	--	--	.594	.992	
002	PIPE	V1-3	0.147	1.074	90.0	P=2686.0 Q_S=1.0	--	--	Vertical pipe from pressurizer to first loop seal elbow volume.
		J1-2	0.147	--	--	--	0.0	0.0	
102	SNGLJUN	J1	0.147	--	--	--	0.0	0.0	
003	SNGLVOL	V1	0.147	0.785	0.0	P=2686.0 Q_S=1.0	--	--	First loop seal elbow volume.
103	SNGLJUN	J1	0.147	--	--	--	0.195	0.195	First elbow junction.
004	PIPE	V1	0.147	0.584	0.0	P=2686.0 Q_S=1.0	--	--	Horizontal segment from first to second loop seal elbow volumes.
104	SNGLJUN	J1	0.147	--	--	--	0.0	0.0	
005	SNGLVOL	V1	0.147	0.594	0.0	P=2686.0 Q_S=1.0	--	--	Second loop seal elbow volume.
105	SNGLJUN	J1	0.147	--	--	--	0.160	0.160	Second elbow junction (steam/water interface).
006	SNGLVOL	V1	0.147	0.511	-90.0	P=2686.0 Q_S=1.0	--	--	Vertical loop seal segment.
106	SNGLJUN	J1	0.147	--	--	--	0.0	0.0	
012	SNGLVOL	V1	0.147	0.511	-90.0	P=2686.0 Q_S=1.0	--	--	Vertical loop seal segment.
112	SNGLJUN	J1	0.147	--	--	--	0.0	0.0	
013	SNGLVOL	V1	0.147	0.589	0.0	P=2686.0 Q_S=1.0	--	--	Third loop seal elbow volume.
113	SNGLJUN	J1	0.147	--	--	--	0.160	0.160	Third elbow junction.
014	PIPE	V1-2	0.147	0.536	0.0	P=2686.0 Q_S=1.0	--	--	Horizontal pipe from third to fourth loop seal elbow volumes.
		J1	0.147	--	--	--	0.0	0.0	
114	SNGLJUN	J1	0.147	--	--	--	0.0	0.0	
015	SNGLVOL	V1	0.147	0.589	0.0	P=2686.0 T=275.0	--	--	Fourth loop seal elbow volume.
115	SNGLJUN	J1	0.147	--	--	--	0.160	0.160	Fourth elbow junction.
016	PIPE	V1-2	0.147	0.465	90.0	P=2686.0 T=125.6	--	--	Vertical loop seal segment upstream from S/RV.
		J1	0.147	--	--	--	0.0	0.0	
116***	VALVE-SRVVLV	J1	0.017	--	--	--	0.9	0.9	S/RV.

TABLE 7-2 (Continued). RELAP5 INPUT PARAMETERS FOR THE KEWAUNEE ONE-SAFETY VALVE SIMULATION

Component	Component Type	Volume or Junction Number	Area sq ft	Length ft	Vertical Angle degrees	Initial Conditions**			Forward Loss	Reverse Loss	Description
018	PIPE	V1-4	0.201	0.500	0.0	P=14.7	T=120				Horizontal segment downstream from S/RV.
		J1-3	0.201	--	--		--		0.0	0.0	
119	SNGLJUN	J1	0.201	--	--		--		0.172	0.172	First elbow downstream from S/RV.
020	PIPE	V1-2	0.201	0.605	0.0	P=14.7	T=120	Q_N=.948	--	--	Horizontal pipe from first elbow to reducer.
		V3-11	0.201	0.512	0.0	P=14.7	T=120	Q_N=.948	--	--	
		J1-10	0.201	--	--		--		0.0	0.0	
120	SNGLJUN	J1	0.201	--	--				0.0	0.0	Junction at 6 inch end of reducer.
021	SNGLVOL	V1	0.375	0.500	0.0	P=14.7	T=120	Q_N=.948	--	--	Reducer (6 by 10 inches).
121	SNGLJUN	J1	0.375	--	--		--		0.0	0.0	Junction at 10 inch end of reducer.
022	PIPE	V1-3	0.548	0.577	0.0	P=14.7	T=120	Q_N=.948	--	--	Horizontal segment downstream from reducer.
		J1-2	0.548	--	--		--		0.0	0.0	
122	SNGLJUN	J1	0.548	--	--		--		0.0	0.0	
023	SNGLVOL	V1	0.548	0.500	0.0	P=14.7	T=120	Q_N=.948	--	--	
139	SNGLJUN	J1	0.548	--	--		--		0.0	0.0	
039	PIPE	V1-5	0.548	0.576	0.0	P=14.7	T=120	Q_N=.948	--	--	Horizontal segment upstream of second elbow.
		J1-4	0.548	--	--		--		0.0	0.0	
141	SNGLJUN	J1	0.548	--	--		--		0.172	0.172	Second elbow in downstream piping.
041	PIPE	V1-6	0.548	0.994	0.0	P=14.7	T=120	Q_N=.948	--	--	Horizontal pipe between second and third elbows.
		J1-5	0.548	--	--		--		0.0	0.0	
143	SNGLJUN	J1	0.548	--	--		--		0.172	0.172	Third elbow in downstream piping.
043	PIPE	V1-3	0.548	0.876	-90.0	P=14.7	T=120	Q_N=.948	--	--	
		J1-2	0.548	--	--		--		0.0	0.0	Vertical segment.
144	SNGLJUN	J1	0.548	--	--		--		0.0	0.0	
044	SNGLVOL	V1	0.548	1.0	-90.0	P=14.7	T=120	Q_N=.948	--	--	Vertical segment.
150	SNGLJUN	J1	0.548	--	--		--		0.0	0.0	
050	PIPE	V1-35	0.548	1.508	-90.0	P=14.7	T=120	Q_N=.948	--	--	
		J1-34	0.548	--	--		--		0.0	0.0	Vertical segment to fourth elbow.
152	SNGLJUN	J1	0.548	--	--		--		0.172	0.172	Fourth elbow in downstream piping.

TABLE 7-2 (Continued). RELAP5 INPUT PARAMETERS FOR THE KEWAUNEE ONE-SAFETY VALVE SIMULATION

Component	Component Type	Volume or Junction Number	Area sq ft	Length ft	Vertical Angle degrees	Initial Conditions**			Forward Loss	Reverse Loss	Description
052	PIPE	V1-15	0.548	2.094	0.0	P=14.7	T=120	Q_N=.948	--	--	Horizontal segment.
		J1-14	0.548	--	--		--		0.0	0.0	
154	SNGLJUN	J1	0.548	--	--		--		0.060	0.060	16.6 degree bend in downstream piping.
054	PIPE	V1-3	0.548	2.327	0.0	P=14.7	T=120	Q_N=.948	--	--	Horizontal segment.
		J1-2	0.548	--	--		--		0.0	0.0	
156	SNGLJUN	J1	0.548	--	--		--		0.172	0.172	Fifth elbow in downstream piping.
056	SNGLVOL	V1	0.548	3.332	-45.0	P=14.7	T=120	Q_N=.948	--	--	Volume from relief tank orifice to air/water interface within tank discharge pipe.
157	SNGLJUN	J1	0.548	--	--		--		0.0	0.0	Air/water interface within tank discharge pipe.
057	SNGLVOL	V1	0.548	2.000	-45.0	P=14.7	T=120		--	--	Volume below water surface to 45 degree bend in relief tank.
158	SNGLJUN	J1	0.548	--	--		--		0.103	0.103	45 degree bend in relief tank discharge pipe.
058	SNGLVOL	V1	0.548	1.650	-90.0	P=14.7	T=120		--	--	
159	SNGLJUN	J1	0.548	--	--		--		0.0	0.0	Vertical segment of discharge pipe.
059	SNGLVOL	V1	0.548	1.500	-90.0	P=14.7	T=120		--	--	
160	SNGLJUN	J1	0.548	--	--		--		0.172	0.172	90 degree bend in relief tank discharge pipe.
060	SNGLVOL	V1	0.548	1.500	0.0	P=14.7	T=120		0.0	0.0	Bend volume.
061***	BRANCH	V1	0.548	4.080	0.0	P=14.7	T=120		--	--	Horizontal discharge pipe.
		J1	0.548	--	--		--		0.0	0.0	
		J2	0.273	--	--		--		0.0	0.0	
		J3	0.548	--	--		--		0.0	0.0	
062***	BRANCH	V1	0.548	4.080	0.0	P=14.7	T=120		--	--	Horizontal discharge pipe.
		J1	0.273	--	--		--		0.0	0.0	
		J2	0.548	--	--		--		0.0	0.0	
063	SNGLVOL	V1	0.548	4.080	0.0	P=14.7	T=120		--	--	Horizontal discharge pipe.
169***	SNGLJUN	J1	0.285	--	--		--		0.0	0.0	
070	BRANCH	V1	106.65	5.629	90.0	P=14.7	T=120		--	--	Volume of water in 75 per cent full relief tank.
		J=0		--	--	--		--		--	--

TABLE 7-2 (Continued). RELAP5 INPUT PARAMETERS FOR THE KEWAUNEE ONE-SAFETY VALVE SIMULATION

Component	Component Type	Volume or Junction Number	Area sq ft	Length ft	Vertical Angle degrees	Initial Conditions**			Forward Loss	Reverse Loss	Description
179	SNGLJUN	J1	106.6	--	--		--		0.0	0.0	Air/water interface within relief tank.
071	SNGLVOL	V1	106.6	1.876	90.0	P=14.7	T=120	Q_N=.948	--	--	Volume of air in 75 per cent full relief tank.
180***	VALVE-TRPVLV	J1	0.548	--	--		--		0.0	0.0	Rupture disk trips when P > 85.0 psi.
072	TMDPVOL	V1	30.0	1.0×10^{20}	90.0	P=14.7	T=82	Q_N=.983	--	--	Atmosphere.

*Assumptions: No choking was assumed to occur in pipe.
Wall friction was computed.
Nonequilibrium calculations were made (unequal phase temperatures).
Pipe roughness was assumed to be 0.00015.

**P = Pressure (psi)
T = Temperature (degrees F)
Q_N = Noncondensable quality (air)
Q_S = Static or equilibrium quality (steam)
Flag 2 has: P, Q_S
Flag 3 has: P, T
Flag 4 has: P, T, Q_N

***Abrupt area change is assumed for junction flag.

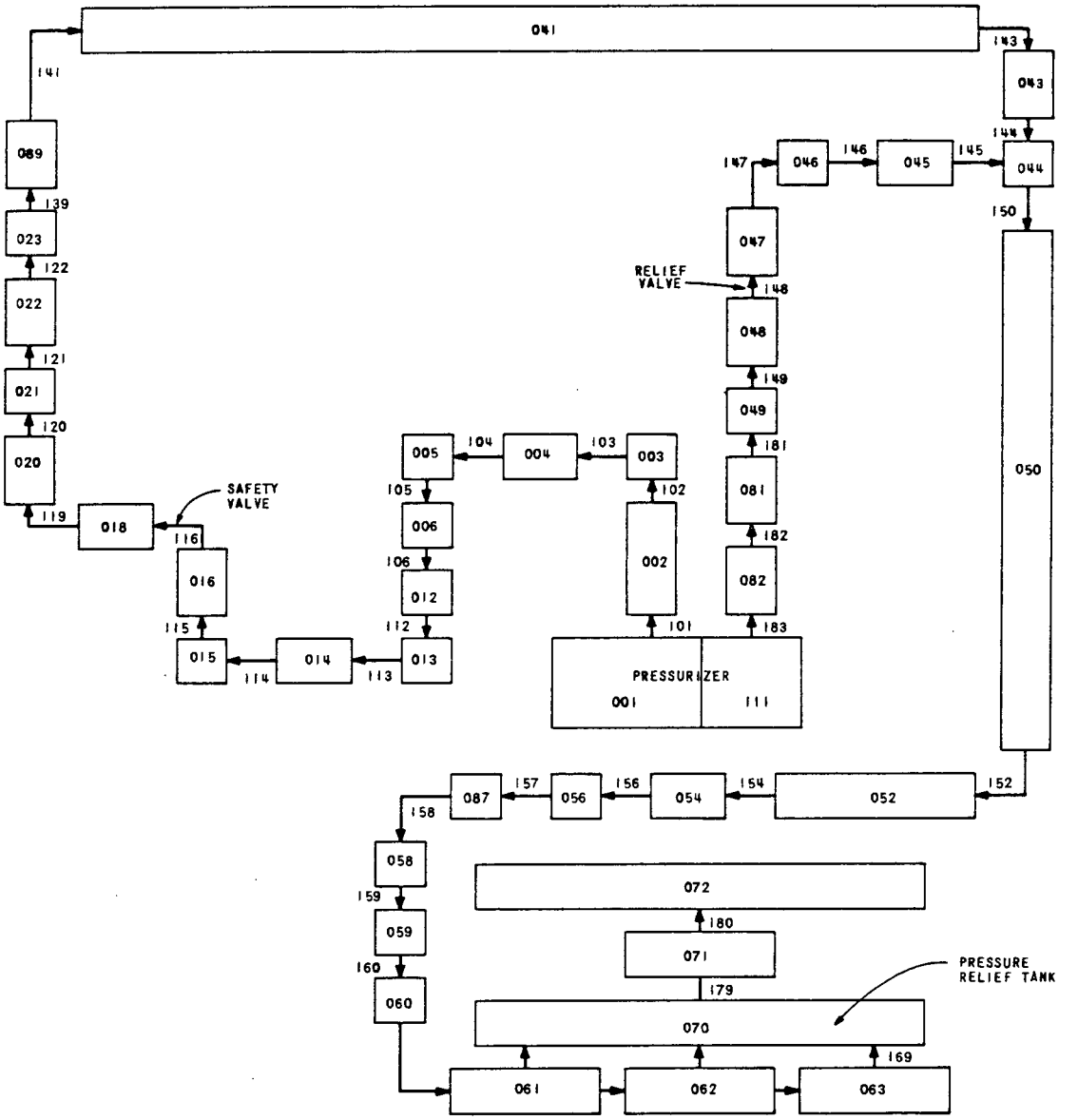

FIGURE 7-3
RELAP5 NODALIZATION FOR
KEWAUNEE ONE-SAFETY - ONE-
RELIEF VALVE SIMULATION

TABLE 7-3. RELAP5 INPUT PARAMETERS FOR THE KEWAUNEE ONE-SAFETY AND ONE-RELIEF VALVE SIMULATION

Component	Component Type	Volume or Junction Number	Area sq ft	Length ft	Vertical Angle degrees	Initial Conditions**		Forward Loss	Reverse Loss	Description
001	TMDPVOL	V1	38.48	25.98	90.0	Table: Time - P - Q_S		--	--	Pressurizer Vessel - Volume = 1,000 cu ft.
101***	SNGLJUN	J1	0.147	--	--	--		.594	.992	
002	PIPE	V1-3	0.147	1.074	90.0	P=2686.0	Q_S=1.0	--	--	Vertical pipe from pressurizer to first loop seal elbow volume.
		J1-2	0.147	--	--	--		0.0	0.0	
102	SNGLJUN	J1	0.147	--	--	--		0.0	0.0	
003	SNGLVOL	V1	0.147	0.785	0.0	P=2686.0	Q_S=1.0	--	--	First loop seal elbow volume.
103	SNGLJUN	J1	0.147	--	--	--		0.195	0.195	First elbow junction.
004	PIPE	V1	0.147	0.584	0.0	P=2686.0	Q_S=1.0	--	--	Horizontal segment from first to second loop seal elbow volumes.
104	SNGLJUN	J1	0.147	--	--	--		0.0	0.0	
005	SNGLVOL	V1	0.147	0.594	0.0	P=2686.0	Q_S=1.0	--	--	Second loop seal elbow volume.
105	SNGLJUN	J1	0.147	--	--	--		0.160	0.160	Second elbow junction (steam/water interfsce).
006	SNGLVOL	V1	0.147	0.511	-90.0	P=2686.0	Q_S=1.0	--	--	Vertical loop seal segment.
106	SNGLJUN	J1	0.147	--	--	--		0.0	0.0	
012	SNGLVOL	V1	0.147	0.511	-90.0	P=2686.0	Q_S=1.0	--	--	Vertical loop seal segment.
112	SNGLJUN	J1	0.147	--	--	--		0.0	0.0	
013	SNGLVOL	V1	0.147	0.589	0.0	P=2686.0	Q_S=1.0	--	--	Third loop seal elbow volume.
113	SNGLJUN	J1	0.147	--	--	--		0.160	0.160	Third elbow junction.
014	PIPE	V1-2	0.147	0.536	0.0	P=2686.0	Q_S=1.0	--	--	Horizontal pipe from third to fourth loop seal elbow volumes.
		J1	0.147	--	--	--		0.0	0.0	
114	SNGLJUN	J1	0.147	--	--	--		0.0	0.0	
015	SNGLVOL	V1	0.147	0.589	0.0	P=2686.0	T=275.0	--	--	Fourth loop seal elbow volume.
115	SNGLJUN	J1	0.147	--	--	--		0.160	0.160	Fourth elbow junction.
016	PIPE	V1-2	0.147	0.465	90.0	P=2686.0	T=125.6	--	--	Vertical loop seal segment upstream from S/RV.
		J1	0.147	--	--	--		0.0	0.0	
116***	VALVE-SRVVLV	J1	0.017	--	--	--		0.9	0.9	S/RV.
018	PIPE	V1-4	0.201	0.500	0.0	P=14.7	T=120			Horizontal segment downstream from S/RV.
		J1-3	0.201	--	--	--		0.0	0.0	
119	SNGLJUN	J1	0.201	--	--	--		0.172	0.172	First elbow downstream from S/RV.

TABLE 7-3 (Continued). RELAP5 INPUT PARAMETERS FOR THE KEWAUNEE ONE-SAFETY AND ONE-RELIEF VALVE SIMULATION

Component	Component Type	Volume or Junction Number	Area sq ft	Length ft	Vertical Angle degrees	Initial Conditions**			Forward Loss	Reverse Loss	Description
020	PIPE	V1-2	0.201	0.605	0.0	P=14.7	T=120	Q_N=.948	--	--	Horizontal pipe from first elbow to reducer.
		V3-11	0.201	0.512	0.0	P=14.7	T=120	Q_N=.948	--	--	
		J1-10	0.201	--	--		--		0.0	0.0	
120	SNGLJUN	J1	0.201	--	--				0.0	0.0	Junction at 6 inch end of reducer.
021	SNGLVOL	V1	0.375	0.500	0.0	P=14.7	T=120	Q_N=.948	--	--	Reducer (6 by 10 inches).
121	SNGLJUN	J1	0.375	--	--		--		0.0	0.0	Junction at 10 inch end of reducer.
022	PIPE	V1-3	0.548	0.577	0.0	P=14.7	T=120	Q_N=.948	--	--	Horizontal segment downstream from reducer.
		J1-2	0.548	--	--		--		0.0	0.0	
122	SNGLJUN	J1	0.548	--	--		--		0.0	0.0	
023	SNGLVOL	V1	0.548	0.500	0.0	P=14.7	T=120	Q_N=.948	--	--	
139	SNGLJUN	J1	0.548	--	--		--		0.0	0.0	
039	PIPE	V1-5	0.548	0.576	0.0	P=14.7	T=120	Q_N=.948	--	--	Horizontal segment upstream of second elbow.
		J1-4	0.548	--	--		--		0.0	0.0	
141	SNGLJUN	J1	0.548	--	--		--		0.172	0.172	Second elbow in downstream piping.
041	PIPE	V1-6	0.548	0.994	0.0	P=14.7	T=120	Q_N=.948	--	--	Horizontal pipe between second and third elbows.
		J1-5	0.548	--	--		--		0.0	0.0	
143	SNGLJUN	J1	0.548	--	--		--		0.172	0.172	Third elbow in downstream piping.
043	PIPE	V1-3	0.548	0.876	-90.0	P=14.7	T=120	Q_N=0.948	--	--	
		J1-2	0.548	--	--		--		0.0	0.0	Vertical segment.
144	SNGLJUN	J1	0.548	--	--		--		0.0	0.0	
111	TMDPVOL	V1	38.48	25.98	90.0	Table: Time - P - Q_S			--	--	
183***	SNGLJUN	J1	0.038	--	--		--		0.596	1.094	
082	PIPE	V1-5	0.038	0.508	90.0	P=2686.0		Q_S=1.0	--	--	Vertical pipe from pressurizer.
		J1-4	0.038	--	--		--		0.0	0.0	
182	SNGLJUN	J1	0.038	--	--		--		0.160	0.160	First 90 degree elbow from pressurizer.
081	PIPE	V1-11	0.038	0.528	0.0	P=2686.0		Q_S=1.0	--	--	Horizontal pipe between first and second elbows.
		J1-10	0.038	--	--		--		0.0	0.0	
181	SNGLJUN	J1	0.038	--	--		--		0.160	0.160	Second 90 degree elbow.
049	SNGLVOL	V1	0.038	0.801	0.0	P=2686.0		Q_S=1.0	--	--	Horizontal pipe from elbow to gate valve.
149	SNGLJUN	J1	0.038	--	--		--		0.0	0.0	Open gate valve.

TABLE 7-3 (Continued). RELAP5 INPUT PARAMETERS FOR THE KEWAUNEE ONE-SAFETY AND ONE-RELIEF VALVE SIMULATION

Component	Component Type	Volume or Junction Number	Area sq ft	Lengtb ft	Vertical Angle degreea	Initial Conditions**			Forward Loss	Reverse Loss	Description
048	PIPE	V1-5	0.038	0.543	0.0	P=2686.0		Q_S=1.0	--	--	Horizontal pipe upstream to PORV.
		J1-4	0.038	--	--		--		0.0	0.0	
148	VALVE-MTRVLV	J1	0.038	--	--		--		3.250	5.730	PORV.
047	PIPE	V1-5	0.088	0.497	0.0	P=14.7	T=120	Q_N=.948	--	--	Horizontal pipe downstream from PORV.
		J1-4	0.088	--	--		--		0.0	0.0	
147	SNGLJUN	J1	0.088	--	--		--		0.72	0.172	Third 90 degree elbow.
046	PIPE	V1-2	0.088	0.493	-90.0	P=14.7	T=120	Q_N=.948	--	--	Vertical segment downstream pipe.
		J1	0.088	--	--		--		0.0	0.0	
146	SNGLJUN	J1	0.088	--	--		--		0.103	0.103	45 degree elbow.
045	PIPE	V1-4	0.088	0.477	-45.0	P=14.7	T=120	Q_N=.948	--	--	Pipe segment inclined at 45 degrees.
		J1-3	0.088	--	--		--		0.0	0.0	
145***	SNGLJUN	J1	0.088	--	--		--		0.522	0.806	Tee junction.
044	BRANCH	V1	0.548	0.500	-90.0	P=14.7	T=120	Q_N=.948	--	--	Branch volume.
		J=0	--	--	--		--		--	--	
150	SNGLJUN	J1	0.548	--	--	--			0.0	0.0	
050	PIPE	V1-35	0.548	1.508	-90.0	P=14.7	T=120	Q_N=.948	--	--	
		J1-34	0.548	--	--		--		0.0	0.0	Vertical segment to fourth elbow.
152	SNGLJUN	J1	0.548	--	--		--		0.172	0.172	Fourtb elbow in downstream piping.
052	PIPE	V1-15	0.548	2.094	0.0	P=14.7	T=120	Q_N=.948	--	--	Horizontal segment.
		J1-14	0.548	--	--		--		0.0	0.0	
154	SNGLJUN	J1	0.548	--	--		--		0.060	0.060	16.6 degree bend in downstream piping.
054	PIPE	V1-3	0.548	2.327	0.0	P=14.7	T=120	Q_N=.948	--	--	Horizontal segment.
		J1-2	0.548	--	--		--		0.0	0.0	
156	SNGLJUN	J1	0.548	--	--		--		0.172	0.172	Fifth elbow in downstream piping.
056	SNGLVOL	V1	0.548	3.332	-45.0	P=14.7	T=120	Q_N=.948	--	--	Volume from relief tank orifice to air/water interface within tank discharge pipe.
157	SNGLJUN	J1	0.548	--	--		--		0.0	0.0	Air/water interface within tank discharge pipe.
057	SNGLVOL	V1	0.548	2.000	-45.0	P=14.7	T=120		--	--	Volume below water surface to 45 degree bend in relief tank.
158	SNGLJUN	J1	0.548	--	--		--		0.103	0.103	45 degree bend in relief tank discharge pipe.
058	SNGLVOL	V1	0.548	1.650	-90.0	P=14.7	T=120		--	--	

TABLE 7-3 (Continued). RELAP5 INPUT PARAMETERS FOR THE KEWAUNEE ONE-SAFETY AND ONE-RELIEF VALVE SIMULATION

Component	Component Type	Volume or Junction Number	Area sq ft	Length ft	Vertical Angle degrees	Initial Conditions**			Forward Loss	Reverse Loss	Description
159	SNGLJUN	J1	0.548	--	--		--		0.0	0.0	Vertical segment of discharge pipe.
059	SNGLVOL	V1	0.548	1.500	-90.0	P=14.7	T=120		--	--	
160	SNGLJUN	J1	0.548	--	--		--		0.172	0.172	90 degree bend in relief tank discharge pipe.
060	SNGLVOL	V1	0.548	1.500	0.0	P=14.7	T=120		0.0	0.0	Bend volume.
061***	BRANCH	V1	0.548	4.080	0.0	P=14.7	T=120		--	--	Horizontal discharge pipe.
		J1	0.548	--	--		--		0.0	0.0	
		J2	0.273	--	--		--		0.0	0.0	
		J3	0.548	--	--		--		0.0	0.0	
062***	BRANCH	V1	0.548	4.080	0.0	P=14.7	T=120		--	--	Horizontal discharge pipe.
		J1	0.273	--	--		--		0.0	0.0	
		J2	0.548	--	--		--		0.0	0.0	
063	SNGLVOL	V1	0.548	4.080	0.0	P=14.7	T=120		--	--	Horizontal discharge pipe.
169***	SNGLJUN	J1	0.285	--	--		--		0.0	0.0	
070	BRANCH	V1	106.65	5.629	90.0	P=14.7	T=120		--	--	Volume of water in 75 per cent full relief tank.
		J=0	--	--	--		--		--	--	
179	SNGLJUN	J1	106.6	--	--		--		0.0	0.0	Air/water interface within relief tank.
071	SNGLVOL	V1	106.6	1.876	90.0	P=14.7	T=120	Q_N=.948	--	--	Volume of air in 75 per cent full relief tank.
180***	VALVE-TRPVLV	J1	0.548	--	--		--		0.0	0.0	Rupture disk trips when P > 85.0 psi.
072	TMDPVOL	V1	30.0	1.0×10^{20}	90.0	P=14.7	T=82	Q_N=.983	--	--	Atmosphere.

*Assumptions: No choking was assumed to occur in pipe.
Wall friction was computed.
Nonequilibrium calculations were made (unequal pbase temperatures).
Pipe roughness was assumed to be 0.00015.

**P = Pressure (psi)
T = Temperature (degrees F)
Q_N = Noncondensable quality (air)
Q_S = Static or equilibrium quality (steam)
Flag 2 has: P, Q_S
Flag 3 has: P, T
Flag 4 has: P, T, Q_N

***Abrupt area change is assumed for junction flag.

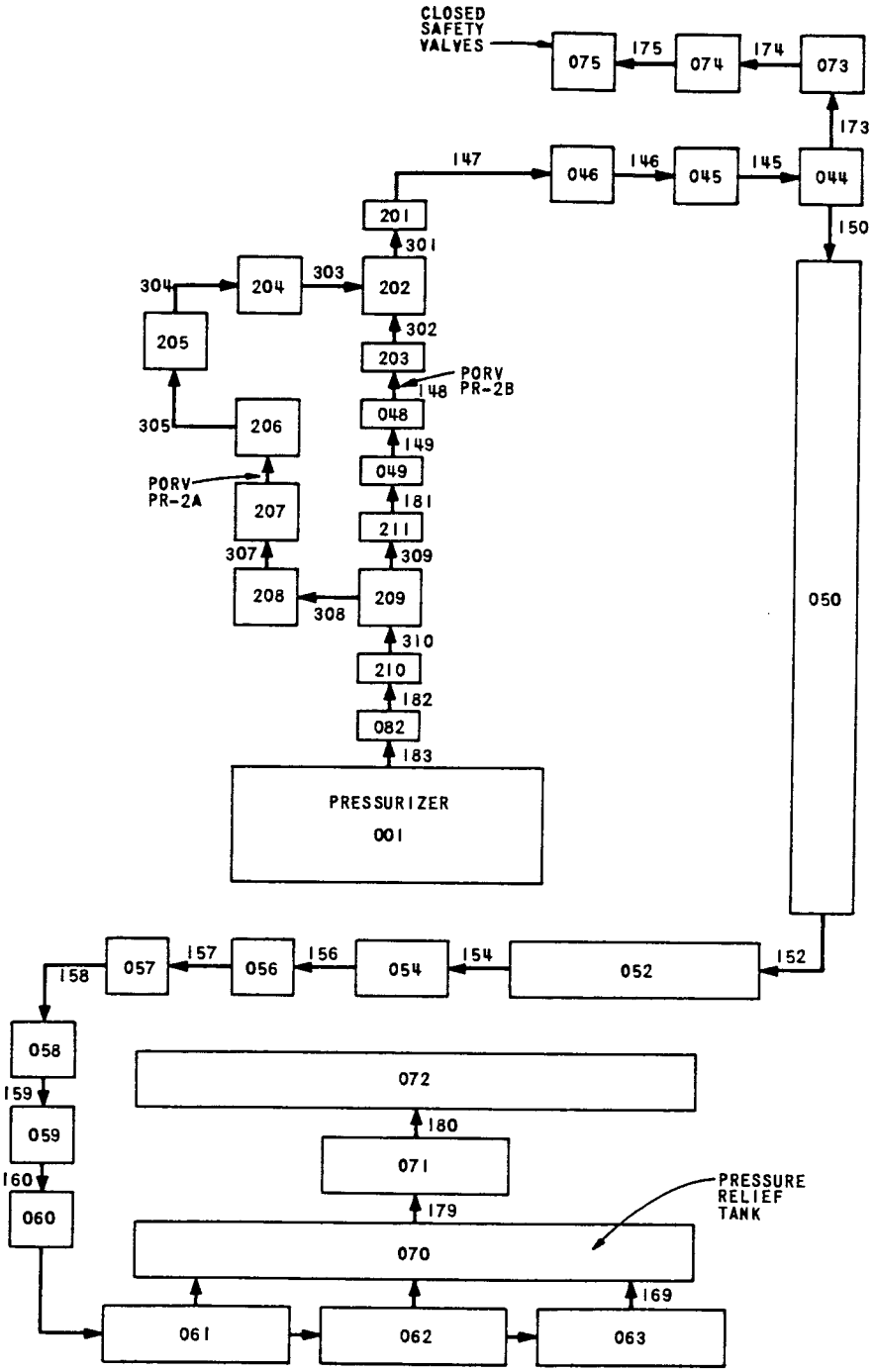

FIGURE 7-4
RELAP5 NODALIZATION FOR KEWAUNEE TWO-RELIEF VALVE SIMULATION

TABLE 7-4. DOWNSTREAM PIPING DATA--KEWAUNEE--DOUBLE PORV*

Component	Component Type	Volume or Junction Number	Area sq ft	Length ft	Vertical Angle degrees	Initial Conditions**			Forward Loss	Reverse Loss	Description
001	TMDPVOL	V1	38.48	25.98	90.0	Table: Time - P - Q_S			--	--	
183***	SNGLJUN		0.038	--	--		--		0.0	0.0	
082	PIPE	V1-5	0.038	0.508	90.0	P=2686.0		Q_S=1.0	--	--	Vertical pipe from pressurizer.
		J1-4	0.038	--	--		--		0.0	0.0	
182	SNGLJUN	J1	0.038	--	--		--		0.160	0.160	First 90 degree elbow from pressurizer.
210	PIPE	V1-6	0.038	0.528	0.0	P=2686.0		Q_S=1.0	--	--	Horizontal pipe from elbow to second PORV branch.
		J1-5	0.038	--	--		--		0.0	0.0	
310	SNGLEJUN	J1	0.038	--	--		--		0.0	0.0	
209	BRANCH	V1/J=0	0.038	0.500	0.0	P=2686.0		Q_S=1.0	--	--	Branch volume to second PORV.
309	SNGLJUN	J1	0.038	--	--		--		0.0	0.0	
211	PIPE	V1-5	0.038	0.484	0.0	P=2686.0		Q_S=1.0	--	--	Horizontal pipe from Branch Volume 209 to second elbow.
		J1-4	0.038	--	--		--		0.0	0.0	
181	SNGLJUN	J1	0.038	--	--		--		0.160	0.160	Second elbow in first branch.
049	SNGLVOL	V1	0.038	0.801	0.0	P=2686.0		Q_S=1.0	--	--	
149	SNGLJUN	J1	0.038	--	--		--		0.0	0.0	Open gate valve in first branch.
048	PIPE	V1-5	0.038	0.543	0.0	P=2686.0		Q_S=1.0	--	--	
		J1-4	0.038	--	--		--		0.0	0.0	
148	VALVE-MTRVLV	J1	0.038	--	--		--		3.250	5.730	First PORV.
203	PIPE	V1-3	0.088	0.497	0.0	P=14.7	T=120	Q_N=0.948	--	--	Volume from first PORV to Branch Volume 202 in first branch.
		J1-2	0.088	--	--		--		0.0	0.0	
302	SNGLJUN	J1	0.088	--	--		--		0.0	0.0	
202	BRANCH	V1/J=0	0.088	0.500	0.0	P=14.7	T=120	Q_N=0.948	--	--	Branch volume from second PORV.
308***	SNGLJUN	J1	0.038	--	--		--		0.0	0.0	
208	SNGLVOL	V1	0.038	0.785	0.0	P=2686.0		Q_S=1.0	--	--	Horizontal pipe from Branch Volume 209 to gate valve in second branch.
307	SNGLJUN	J1	0.038	--	--		--		0.0	0.0	Open gate valve in second branch.

*Abrupt area change is assumed for junction flag.

TABLE 7-4 (Continued). DOWNSTREAM PIPING DATA--KEWAUNEE--DOUBLE PORV*

Component	Component Type	Volume or Junction Number	Area sq ft	Length ft	Vertical Angle degrees	Initial Conditions**			Forward Loss	Reverse Loss	Description
207	PIPE	V1-6	0.038	0.489	0.0	P=2686.0		Q_S=1.0	--	--	Horizontal pipe from gate valve to PORV in second branch.
		J1-5	0.038	--	--		--		0.0	0.0	
306	VALVE-MTRVLV	J1	0.038	--	--		--		3.250	5.730	Second PORV.
206	PIPE	V1-2	0.051	0.450	0.0	P=14.7	T=120	Q_N=0.948	--	--	Horizontal pipe from PORV to second elbow in second branch.
		J1	0.051	--	--		--		0.0	0.0	
305	SNGLJUN	J1	0.051	--	--		--		0.173	0.173	Second elbow in second branch.
205	PIPE	V1-3	0.051	0.614	0.0	P=14.7	T=120	Q_N=0.948	--	--	Pipe from second elbow to 45 degree elbow in second branch.
		J1-2	0.051	--	--		--		0.0	0.0	
304	SNGLJUN	J1	0.051	--	--		--		0.104	0.104	45 degree elbow in second branch.
204	PIPE	V1-2	0.051	0.576	0.0	P=14.7	T=120	Q_N=0.948	--	--	Pipe from 45 degree elbow to Branch Volume 202 in second branch.
		J1	0.051	--	--		--		0.0	0.0	
303***	SNGLJUN	J1	0.051	--	--		--		0.0	0.0	
301	SNGLJUN	J1	0.088	--	--		--		0.0	0.0	
201	SNGLVOL	V1	0.088	0.493	0.0	P=14.7	T=120	Q_N=0.948	--	--	Horizontal pipe from Branch Volume 202 to third elbow.
147	SNGLJUN	J1	0.088	--	--		--		0.172	0.172	Third 90 degree elbow.
046	PIPE	V1-2	0.088	0.493	-90.0	P=14.7	T=120	Q_N=0.948	--	--	Vertical segment downstream pipe.
		J1	0.088	--	--		--		0.0	0.0	
146	SNGLJUN	J1	0.088	--	--		--		0.103	0.103	45 degree elbow.
045	PIPE	V1-4	0.088	0.477	-45.0	P=14.7	T=120	Q_N=0.948	--	--	Pipe segment inclined at 45 degrees.
		J1-3	0.088	--	--		--		0.0	0.0	
145	SNGLJUN	J1	0.088	--	--		--		0.522	0.806	Tee junction.
044	BRANCH	V1/J=0	0.548	0.500	-90.0	P=14.7	T=120	Q_N=0.948	--	--	Branch volume.
150	SNGLJUN	J1	0.548	--	--	--			0.0	0.0	
173	SNGLJUN	J1	0.548	--	--		--		0.0	0.0	
073	SNGLVOL	V1	0.548	3.129	90.0	P=14.7	T=120	Q_N=0.948	--	--	Vertical segment from branch to Structural Node 814.
174	SNGLJUN	J1	0.548	--	--		--		0.172	0.172	
074	SNGLVOL	V1	0.548	5.963	0.0	P=14.7	T=120	Q_N=0.948	--	--	Horizontal segment from Structural Node 814 to 813.

TABLE 7-4 (Continued). DOWNSTREAM PIPING DATA--KEWAUNEE--DOUBLE PORV*

Component	Component Type	Volume or Junction Number	Area sq ft	Length ft	Vertical Angle degrees	Initial Conditions**			Forward Loss	Reverse Loss	Description
175	SNGLJUN	J1	0.548	--	--		--		0.172	0.172	
075	SNGLVOL	V1	0.548	3.524	0.0	P=14.7	T=120	Q_N=0.948	--	--	Horizontal segment from Structural Node 813 to 806.
050	PIPE	V1-35	0.548	1.508	-90.0	P=14.7	T=120	Q_N=0.948	--	--	
		J1-34	0.548	--	--		--		0.0	0.0	Vertical segment to fourth elbow.
152	SNGLJUN	J1	0.548	--	--		--		0.172	0.172	Fourth elbow in downstream piping.
052	PIPE	V1-15	0.548	2.094	0.0	P=14.7	T=120	Q_N=0.948	--	--	Horizontal segment.
		J1-14	0.548	--	--		--		0.0	0.0	
154	SNGLJUN	J1	0.548	--	--		--		0.060	0.060	16.6 degree bend in downstream piping.
054	PIPE	V1-3	0.548	2.327	0.0	P=14.7	T=120	Q_N=0.948	--	--	Horizontal segment.
		J1-2	0.548	--	--		--		0.0	0.0	
156	SNGLJUN	J1	0.548	--	--		--		0.172	0.172	Fifth elbow in downstream piping.
056	SNGLVOL	V1	0.548	3.332	-45.0	P=14.7	T=120	Q_N=0.948	--	--	Volume from relief tank orifice to air/water interface within tank discharge pipe.
157	SNGLJUN	J1	0.548	--	--		--		0.0	0.0	Air/water interface within tank discharge pipe.
057	SNGLVOL	V1	0.548	2.000	-45.0	P=14.7	T=120		--	--	Volume below water surface to 45 degree bend in relief tank.
158	SNGLJUN	J1	0.548	--	--		--		0.103	0.103	45 degree bend in relief tank discharge pipe.
058	SNGLVOL	V1	0.548	1.650	-90.0	P=14.7	T=120		--	--	
159	SNGLJUN	J1	0.548	--	--		--		0.0	0.0	Vertical segment of discbarge pipe.
059	SNGLVOL	V1	0.548	1.500	-90.0	P=14.7	T=120		--	--	
160	SNGLJUN	J1	0.548	--	--		--		0.172	0.172	90 degree bend in relief tank discharge pipe.
060	SNGLVOL	V1	0.548	1.500	0.0	P=14.7	T=120		0.0	0.0	Bend volume.
061***	BRANCH	V1	0.548	4.080	0.0	P=14.7	T=120		--	--	Horizontal discharge pipe.
		J1	0.548	--	--		--		0.0	0.0	
		J2	0.273	--	--		--		0.0	0.0	
		J3	0.548	--	--		--		0.0	0.0	
062***	BRANCH	V1	0.548	4.080	0.0	P=14.7	T=120		--	--	Horizontal discharge pipe.
		J1	0.273	--	--		--		0.0	0.0	
		J2	0.548	--	--		--		0.0	0.0	
063	SNGLVOL	V1	0.548	4.080	0.0	P=14.7	T=120		--	--	Horizontal discharge pipe.
169***	SNGLJUN	J1	0.285	--	--		--		0.0	0.0	

TABLE 7-4 (Continued). DOWNSTREAM PIPING DATA--KEWAUNEE--DOUBLE PORV*

Component	Component Type	Volume or Junction Number	Area sq ft	Length ft	Vertical Angle degrees	Initial Conditions**			Forward Loss	Reverse Loss	Description
070	BRANCH	V1	106.65	5.629	90.0	P=14.7	T=120		--	--	Volume of water in 75 per cent full relief tank.
		J=0	--	--	--		--		--	--	
179	SNGLJUN	J1	106.6	--	--		--		0.0	0.0	Air/water interface within relief tank.
071	SNGLVOL	V1	106.6	1.876	90.0	P=14.7	T=120	Q_N=0.948	--	--	Volume of air in 75 per cent full relief tank.
180***	VALVE-TRPVLV	J1	0.548	--	--		--		0.0	0.0	Rupture disk trips when P > 85.0 psi.
072	TMDPVOL	V1	30.0	1.0×10^{20}	90.0	P=14.7	T=82	Q_N=0.983	--	--	Atmosphere.

*Assumptions: No choking was assumed to occur in pipe.
Wall friction was computed.
Nonequilibrium calculations were made (unequal phase temperatures).
Pipe roughness was assumed to be 0.00015.

**P = Pressure (psi)
T = Temperature (degrees F)
Q_N = Noncondensable quality (air)
Q_S = Static or equilibrium quality (steam)
Flag 2 has: P, Q_S
Flag 3 has: P, T
Flag 4 has: P, T, Q_N

***Abrupt area change is assumed for junction flag.

TABLE 7-5. TAC2D PARAMETERS USED IN THE KEWAUNEE LOOP SEAL TEMPERATURE PROFILE DETERMINATION

Problem geometry	Cylindrical
Number nodes in radial direction	21
Number nodes in axial direction	36
Steel properties	
Thermal conductivity (Btu/hr-ft-R)	10.0
Volumetric specific heat (Btu/ft^3-R)	64.1
Emissivity	0.45
Water properties	
Thermal conductivity (Btu/hr-ft-R)	0.349
Volumetric specific heat (Btu/ft^3-R)	58.3
Initial temperatures (F)	
Steam	653
Piping in steam region	645
Ambient air	120
Unit conductances at material interfaces (Btu/hr-ft^2-R)	
Steam/piping	1,150
Ambient air/bottom of valve	0.443
Ambient air/top of valve	0.877

Ambient air/piping

$$h_{air-pipe} = (1.0-((660.0-(2.0*(DR-460.0)-75.0))/585.0)**5.0)*1.39$$

where DR is linear average of metal and air temperatures in degrees R

Water/piping

$$h_{water-pipe} = (1.0-((653.0-(DR-460.0))/578.0)**0.6)*570.0$$

where DR is linear average of metal and water temperatures in degrees R

indicated is presented in Figure 7-5. The TAC2D calculated results are presented in Table 7-6 and are shown in Figures 7-6 and 7-7.

7.2 KEWAUNEE PLANT SPECIFIC DISCHARGE PIPING LOAD RESULTS

Based on the evaluations of the above four cases, the two worst case discharge piping loads were found to be during the two-safety valve actuation simulation with cold loop seals and during the one-safety valve actuation simulation with a cold loop seal. These piping loads were used to determine the appropriate moments and stresses on the S/RV piping and supports of the Kewaunee power plant as described in Section 8.

Subsequent to the cold loop seal stress evaluations discussed in Section 8, a two-safety valve actuation simulation with hot loop seals (average temperature of 476 F) was run using RELAP5/REPIPE to determine the loading on the Kewaunee discharge piping.

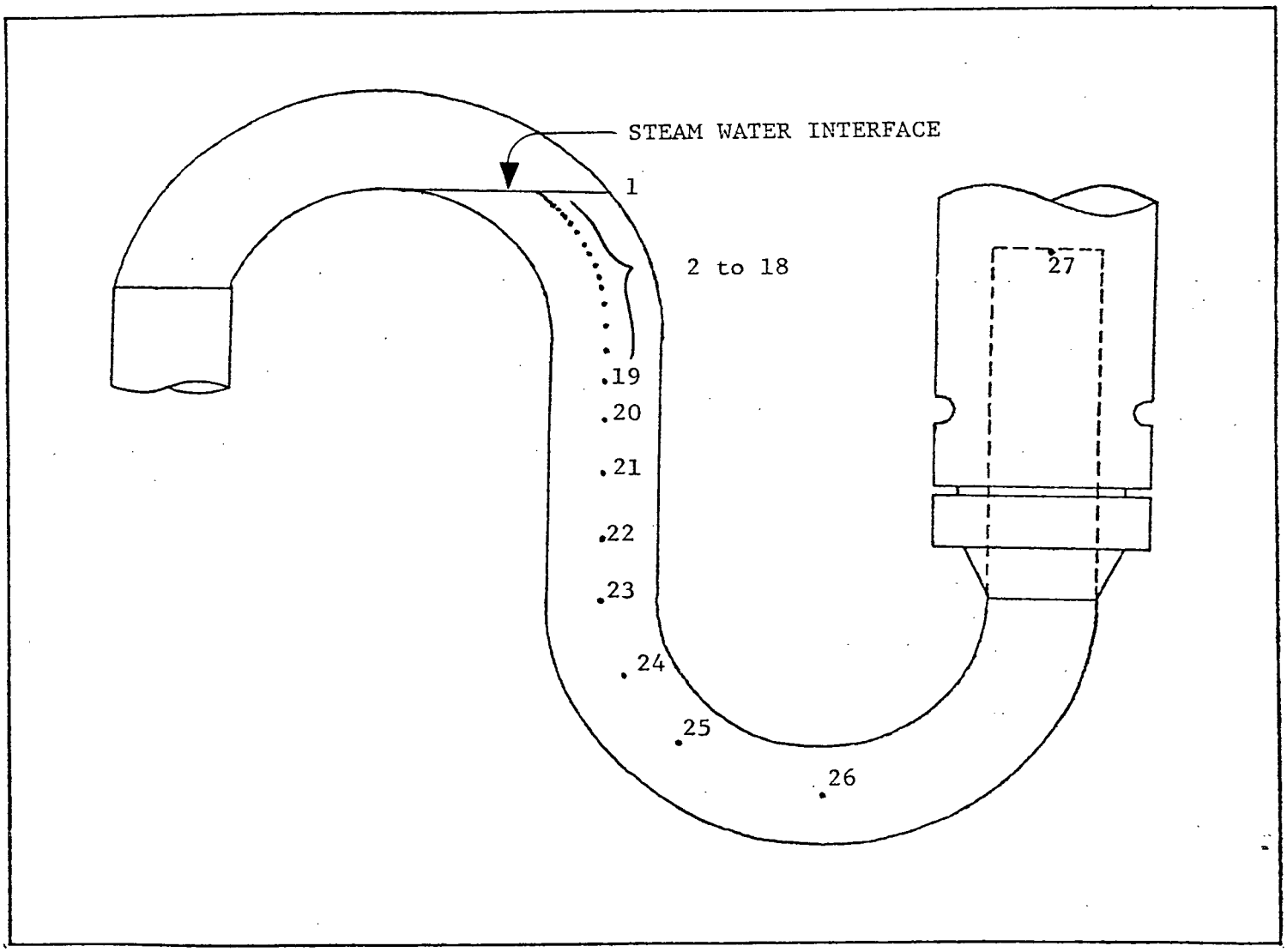

FIGURE 7-5
KEWAUNEE LOOP SEAL
TEMPERATURE DISTRIBUTION

TABLE 7-6. KEWAUNEE LOOP SEAL TEMPERATURE DISTRIBUTION

Node*	Distance** (ft)	Temperature
1	.008	618
2	.025	573
3	.042	536
4	.058	505
5	.075	478
6	.094	450
7	.115	423
8	.135	399
9	.156	377
10	.188	348
11	.229	315
12	.271	288
13	.313	264
14	.354	244
15	.396	227
16	.458	205
17	.542	183
18	.625	165
19	.75	145
20	.917	128
21	1.125	120
22	1.375	120
23	1.625	120
24	1.917	120
25	2.25	120
26	2.793	120
27	5.492	120

*Refer to Figure 7-5.

**Measure from steam-water interface.

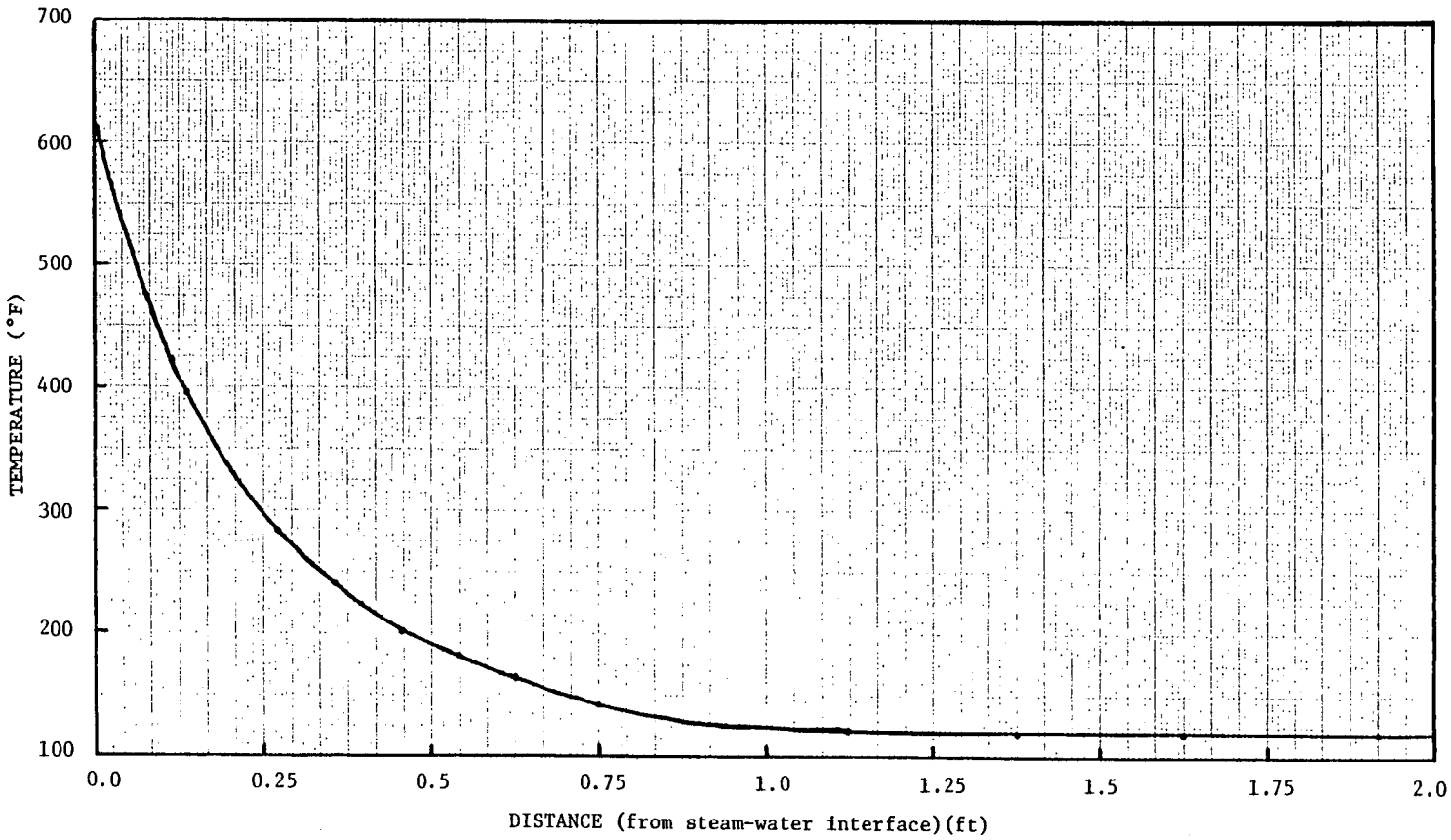

FIGURE 7-6
KEWAUNEE LOOP SEAL WATER TEMPERATURE VARIATION (0.0 to 2.0 FT)

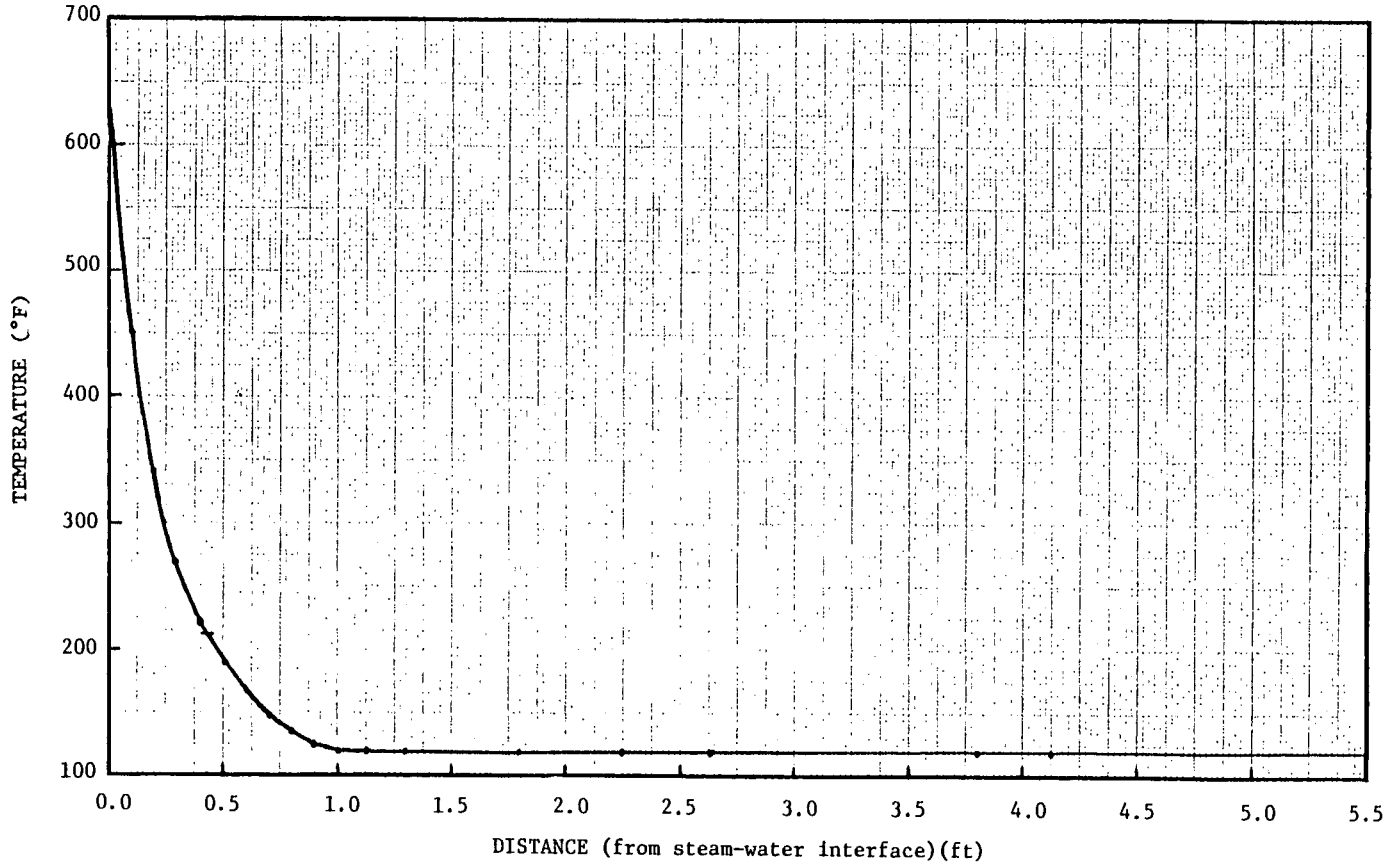

FIGURE 7-7
KEWAUNEE LOOP SEAL WATER TEMPERATURE VARIATION (0.0 TO 5.5 FT)

8.0 KEWAUNEE PIPING STRESS ANALYSIS

The pressurizer safety and relief valve piping and restraints will be analyzed in accordance with the Final Safety Analysis Report (FSAR) and utilizing current computer piping analysis programs.

8.1 KEWAUNEE ADLPIPE MODEL

The computer program used to analyze the Safety and Relief Valve (S/RV) piping is known commercially as "ADLPIPE" (see Reference 20). "ADLPIPE" will analyze piping stresses and predict restraint loading for static, dynamic and time dependent dynamic loading. "ADLPIPE" has been verified and is a recognized program in the public domain and has had sufficient history of use to justify its acceptability and validity. A description of "ADLPIPE" is given in Appendix D of this report.

The Kewaunee S/RV piping was originally designed to USA Standard Code for Pressure Piping USAS B31.1.0 1967 Edition and code cases to ASA B31.1-1955. The piping analysis was performed using "ADLPIPE" version D which meets or exceeds the requirements of the Kewaunee FSAR.

The piping system consists of inlet piping from the pressurizer to safety and relief valves and discharge piping which joins into a common header for discharge into the pressure relief tank. See Figure 3-2 of Section 3.0 for a schematic piping layout, Tables 3-8 and 3-9 of Section 3.0 for piping line listing, and Figure 3-1 of Section 3.0 for a dimensioned piping isometric. For a description of piping restraints see Table 8-1.

To perform a dynamic analysis the piping system distributed weight must be lumped at specified mass points. A listing of ITT Grinnell drawings is presented in Table 8-2. See Figure 8-1 and Table 8-3 for a description of the lumped masses. The dynamic earthquake analysis will utilize lumped mass points with an 800 designator. The dynamic time history analysis will utilize the same 800 lumped mass designator except near elbows where additional non-800 designators have been indicated. These non-800 lumped mass points are points of application for the time dependent forcing functions, which predict loading due to safety and/or relief valve actuation.

TABLE 8-1. KEWAUNEE PIPING RESTRAINTS DESIGN SPECIFICATIONS*

Support		C_L Pipe			Dir. Cosine				Rated Load
RC-H	PT	X (ft)	Y (ft)	Z (ft)	i	j	k	HGR TYP	Grinnell (lb)
8	22	38.7	657.9	15.5	.82	0	.57	Strut	4,556**
40	231	39.0	659.4	17.6	-.83	-.34	.45	Snubber	17,600
7	31	38.3	659.4	17.9	0	1.0	0	Spring Can	CL 721 HL 585
6	807	33.2	659.4	20.7	0	1.0	0	Spring Can	CL 876 HL 745
5	56	27.9	659.4	16.2	0	1.0	0	Spring Can	CL 1335 HL 1116
9	138	32.2	657.9	19.0	-.48	0	-.89	Strut	3,845**
37	57	27.9	655.9	16.1	.88	0	.48	Snubber	17,600
3	59	27.9	627.3	16.1	0	1.0	0	Spring Can	CL 731 HL 819
4	60	27.9	623.5	16.2	1.0	0	1.0	Guide	1,458***
39	61	27.9	604.0	16.2	.93	0	0.38	Snubber	17,600
38	63	26.1	602.5	16.9	-.13	-.94	-.32	Snubber	17,600
2	64	22.6	602.5	18.3	0	1.0	0	Spring Can	CL 1021 HL 1216
1	65	4.4	602.5	25.8	0	1.0	0	Spring Can	CL 924 HL 964
11	80	32.5	658.7	13.7	0	1.0	0	Spring Can	CL 1440 HL 1237
12	99	33.8	658.7	16.1	0	1.0	0	Spring Can	CL 1140 HL 971

*See Table 8-2 for ITT Grinnell drawings.

**Load reported by original analysis; review of ITT Grinnell standard components Figure 211 indicates a rated load of 8,000 pounds.

***Load reported by original analysis (Reference 23).

TABLE 8-2. ITT GRINNELL RESTRAINT DRAWINGS

Hanger No.	Reference Sketch No.	Date Drawn
RCH-1	4100	5/28/71
RCH-2	4101	5/28/71
RCH-3	4102	5/28/71
RCH-4	4104, 4105	5/29/71
RCH-5	4106	5/27/71
RCH-6	4108	5/29/71
RCH-7	4110	5/27/71
RCH-8	4111A	7/26/71
RCH-9	4112, 4112A	7/26/71
RCH-11	4114	5/28/71
RCH-12	4115	5/27/71
RCH-37	4145	1/7/74
RCH-38	4146	1/7/74
RCH-39	4147	1/8/74
RCH-40	4148	1/7/74

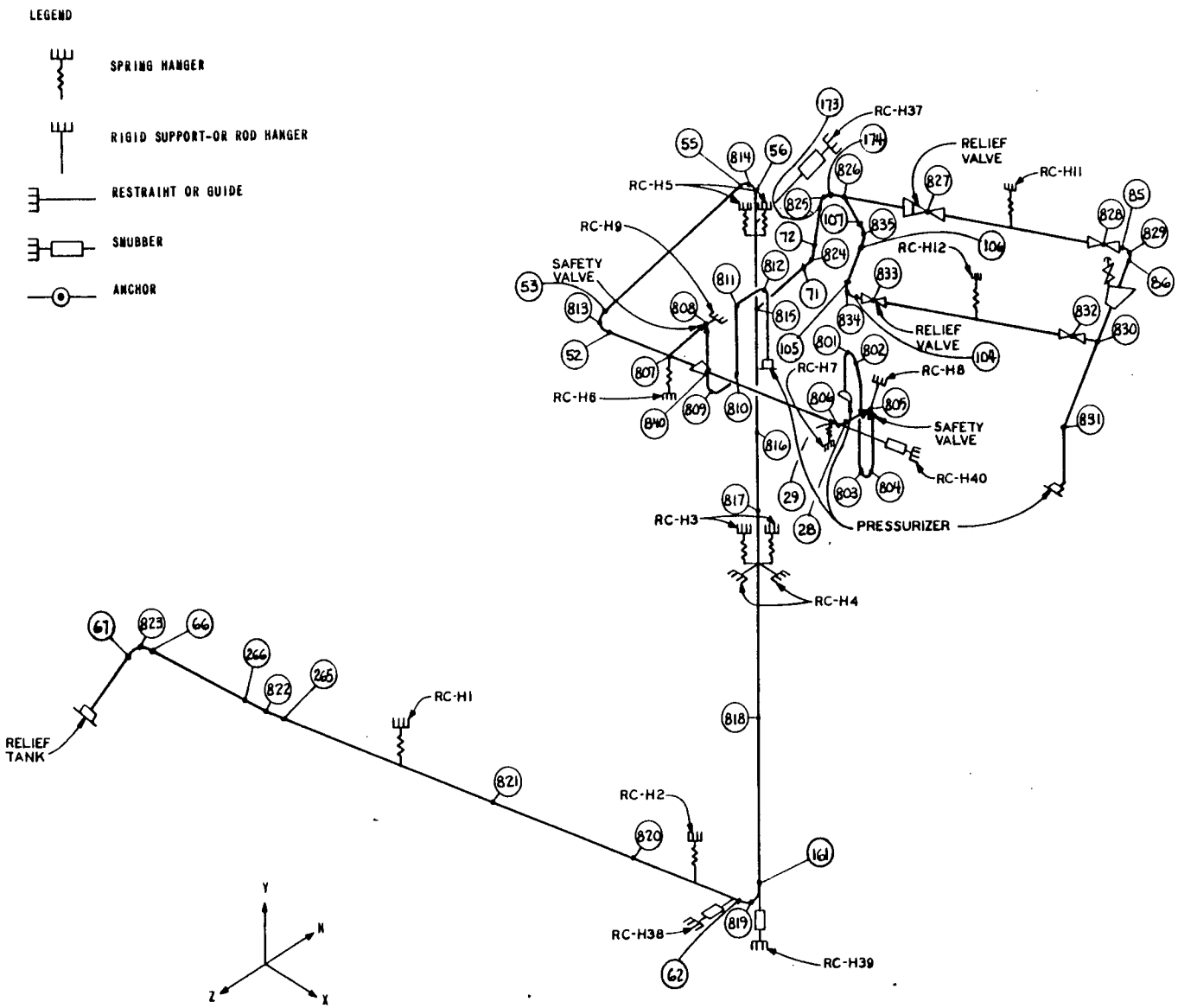

FIGURE 8-1
KEWAUNEE S/RV DISCHARGE PIPING ADLPIPE
LUMP MASS SKETCH

TABLE 8-3. KEWAUNEE LUMP MASS DESCRIPTION FOR ADLPIPE CALCULATIONS

Node	X (ft)	Y, Elev. (ft)	Z (ft)	Weight (lb)	Comments
C_L	34.3	652.8	16.5	N/A	Pressurizer
10	36.3	656.0	14.1	N/A	Anchor PR-3A Pressurization Connection
801	36.4	659.7	13.9	194.2	4.3' of 6" SCH 160
802	37.4	659.7	14.6	85.4	1.9' of 6" SCH 160
803	37.4	657.2	14.6	91.1	2.0' of 6" SCH 160
804	38.7	657.2	15.4	94.4	2.1' of 6" SCH 160
25	38.7	659.4	15.4	684.0	C_L Valve PR-3A
850	38.7	659.8	15.5	684.0	C.g. Valve PR-3A*
806	39.6	659.4	17.2	89.9	4.7' of 6" SCH 40S
807	33.2	659.4	20.7	99.4	1.9' of 10" SCH 40S and 1.1' of 6" SCH 40S
36	38.2	659.4	19.0	684.0	C_L Valve PR-3B
803	32.2	659.8	19.7	684.0	C.g. Valve PR-3B*
809	32.2	657.2	19.0	94.4	2.1' of 6" SCH 160
810	31.5	657.2	17.6	91.1	2.0' of 6" SCH 160
811	31.5	659.7	17.6	85.4	1.9' of 6" SCH 160
812	30.9	659.7	16.5	194.2	4.3' of 6" SCH 160
47	31.1	656.0	16.5	N/A	Anchor PR-3B Pressurization Connection
813	31.0	659.4	21.9	182.2	4.5' of 10" SCH 40S
814	27.9	659.4	16.2	200.3	4.9' of 10" SCH 40S
815	27.9	656.0	16.2	352.5	8.7' of 10" SCH 40S
816	27.9	642.0	16.2	516.7	12.8' of 10" SCH 40S
817	27.9	630.5	16.2	516.7	12.8' of 10" SCH 40S
818	27.9	616.5	16.2	566.7	14.0' of 10" SCH 40S
819	27.9	602.5	16.2	485.8	12.0' of 10" SCH 40S
820	18.6	602.5	20.0	404.5	10.0' of 10" SCH 40S
821	9.4	602.5	23.7	438.7	10.8' of 10" SCH 40S
822	-1.4	602.5	28.2	383.4	9.5' of 10" SCH 40S

TABLE 8-3 (Continued). KEWAUNEE LUMP MASS DESCRIPTION FOR ADLPIPE CALCULATIONS

Node	X (ft)	Y, Elev. (ft)	Z (ft)	Weight (lb)	Comments
823	-8.7	602.5	28.9	237.8	5.9' of 10" SCH 40S
68	-8.5	600.9	30.5	N/A	Anchor Relief Tank Connection
824	29.1	657.4	15.5	16.3	1.5' of 4" SCH 40S
825	29.1	658.5	15.3	10.0	1.0' of 4" SCH 40S
826	29.7	658.5	15.2	34.6	2.4' of 4" SCH 40S and 1.1' of 3" SCH 40S
76	31.3	658.6	14.3	480.0	C_L Valve PR-2B
827	31.3	661.2	14.3	480.0	C.g. Valve PR-2B*
82	33.7	658.8	13.0	527.0	C_L Valve PR-1B
828	33.7	Later	13.0	527.0	C.g. Valve PR-1B*
829	34.5	658.9	12.6	33.2	2.3' of 3" SCH 160
830	35.8	658.9	15.0	73.7	5.1' of 3" SCH 160
831	37.3	658.9	17.9	79.5	5.6' of 3" SCH 160
92	37.3	656.3	17.9	N/A	Anchor Pressurization Relief Valve Connection
96	35.1	658.9	15.4	527.0	C_L Valve PR-1A
832	35.1	Later	15.4	527.0	C.g. Valve PR-1A*
101	32.5	658.6	16.8	480.0	C_L Valve PR-2A
833	32.5	661.2	16.8	480.0	C.g. Valve PR-2A*
834	31.7	658.5	17.2	20.4	2.7' of 3" SCH 40S
835	30.8	658.5	15.5	16.7	2.2' of 3" SCH 40S
840	32.1	659.4	20.1	75.9	4.0' of 6" SCH 40S

*C.g.--Designates center of gravity.

8.2 DETERMINATION OF STRESS ALLOWABLES

The stress analysis for the S/RV piping and restraints will utilize the loading combinations (see FSAR Table B.7-1) and the stress allowables from the Kewaunee FSAR (see Table B.7-3 of the FSAR). In addition to the loading specified in the Kewaunee FSAR, piping stresses and restraint loading will be evaluated due to safety and relief valve actuation. See Tables 8-4, 8-5, and 8-6 of this report for piping specific loading combinations and definitions, respectively.

All inlet piping or piping from the pressurizer up to and including the safety and relief valves were analyzed as FSAR Class I piping. All downstream piping or piping past the safety and relief valves to the pressure relief tank were analyzed as FSAR CIass II. In order to ensure the validity of the computer analysis, all piping will be subjected to the loading defined in Table 8-4, Load Combination for FSAR Class I Piping. The upstream piping or FSAR Class I piping should maintain stresses below the allowables for each plant condition. The downstream piping or FSAR Class II piping should maintain stresses below the allowables for the normal and upset conditions. For emergency and faulted conditions the FSAR Class II piping should maintain piping stresses below FSAR Class I allowables up to the first guide RCH-4. This will ensure the integrity of the primary pressure boundary has not been influenced by downstream piping loading and deflections.

Table 8-1 of this report indicates restraint type and allowable load. The deflection for spring cans was determined from vendor supplied shop ITT Grinnell shop drawings. The snubbers allowable loads are the maximum recommended loads for 3-1/4-inch cylinder for ITT Grinnell snubber Figure No. 200. The allowable loading on the guide was determined from the reported load on the vendor supplied ITT Grinnell shop drawings. The allowable load on the sway struts was determined from ITT Grinnell Figure 211.

On May 11, 1982, a walk down of the safety and relief valve piping and restraints was performed. Existing restraints, pipe and structural attachments were verified. All restraints conform to ITT Grinnell drawings, or field measurements were taken as needed.

TABLE 8-4. LOAD COMBINATIONS FOR FSAR CLASS I PIPING AND COMPONENTS

Condition	Load Combination*	B31.1 Equation**	Stress Allowable	Remarks
Normal	DL + PI	11	S_h	Primary and normal loads
Upset	$DL + PI \pm [SO^2 + SA^2 + ST1^2]^{1/2}$	12	$1.2S_h$	Primary and occasional loads
	TE + TA	13	S_a	Secondary loads
	TE + TA + DL + PI	14	$S_a + S_h$	Secondary and primary loads to be evaluated only if Equation 13 is exceeded
Emergency	$DL + PI \pm [SS^2 + SA^2 + ST2^2]^{1/2}$	12	$1.8S_h$	Primary loads
Faulted	$DL + PI \pm [SS^2 + SA^2 + ST3]^{1/2}$	12	$2.4S_h$	Primary loads

*See Table 8-5 for definitions of symbols.

**See Reference 21.

TABLE 8-5. LOAD COMBINATIONS FOR FSAR CLASS II PIPING AND COMPONENTS

Condition	Load Combinations*	B31.1 Equation**	Stress Allowable	Remarks
Normal	DL + PI	11	S_h	Primary and normal loads
Upset	DL + PI + $[SO^2 + SA^2]^{1/2}$	12	$1.2S_h$	Primary and occasional loads
	TE + TA	13	S_a	Secondary loads
	DL + PI + TE + TA	14	$S_a + S_h$	Secondary and primary loads to be evaluated only if Equation 13 is exceeded

*See Table 8-5 for definition of symbols.

**See Reference 21.

TABLE 8-6. DEFINITIONS AND LOAD ABBREVIATIONS

DL	Dead Load
PI	Pressure
TE	Thermal Expansion
TA	Thermal Anchor Motions
SO	Operating Basis Earthquake (OBE)
SS	Design Basis Earthquake (DBE)
SA	Seismic Anchor Motions (OBE or DBE)
ST1	System Transient (2 relief valves)
ST2	System Transient (1 safety valve)
ST3	System Transient (2 safety valves)
S_h	Hot allowable stress as defined by USAS B31.1.0 1967
S_a	Allowable stress range for hot and cold stress allowables as defined by USAS B31.1.0 1967

8.3 PRELIMINARY EVALUATION OF KEWAUNEE PIPING STRESS AND RESULTS

8.3.1 Events Evaluated

The piping stress and restraint loading for the transient due to safety valve actuation are much larger than the other loading conditions. The preliminary report will, therefore, concentrate on piping stress and restraint loading due to safety valve actuation. The other events such as dead weight, seismic, thermal, and pressure will be included in the final stress report; however, they will not significantly increase the resultant stresses. The Kewaunee piping specific loading due to safety valve actuation yields a reasonable representation of the piping stress and restraint loading.

The following safety valve actuations were evaluated.

(1) One safety valve actuation with an average loop seal temperature of 120 F.

(2) Two safety valve actuations with an average loop seal temperature of 120 F.

(3) One safety valve actuation with an average loop seal temperature of 476 F.

(4) Two safety valve actuations with an average loop seal temperature of 476 F with three additional restraints.

(5) Two safety valve actuations with an average loop seal temperature of 476 F with six additional restraints.

The forcing function for the five events were applied to the piping system at specific lumped mass points. See Figure 8-1 for the lumped mass points and Table 8-7 for the direction cosines of the forcing function at each lumped mass point.

8.3.2 ADLPIPE Results

The as-built Kewaunee Nuclear Plant Safety and Relief Valve piping has several horizontal and vertical dynamic restraints which were designed and located to restrain the piping during a seismic or dynamic event. The existing restraints and piping network were modeled and the appropriate RELAP5 calculated piping specific forcing functions were used to determine the piping stresses. The computer program ADLPIPE was used to do this

TABLE 8-7. FORCING FUNCTION LUMPED MASS APPLICATION POINTS AND DIRECTION COSINES

Lumped Mass Point	Direction Cosines		
	i	j	k
28	0.4772	0.0	0.8788
807*	0.4772	0.0	0.8788
52	-0.8788	0.0	0.4772
55	-0.4772	0.0	-0.8788
161	0.0	-1.0	0.0
265	-0.9252	0.0	0.3795
66	-0.9951	0.0	0.0993

*Used for two safety valve actuations only.

analysis. Three areas of piping were monitored for stress as per the following description (see Figure 3-1). The loop seal piping includes all piping from the pressurizer to safety valves PR-3A and PR-3B. The relief valve piping includes all piping from the pressurizer to relief valves PR-2A and PR-2B. The downstream piping includes all piping from the safety and relief valves to restraint guide RC-H4 located on the vertical discharge riser.

The piping system, as built, was analyzed for one safety valve actuation (PR-3A) and two safety valve actuations. The forcing functions were generated based on a cold loop seal (i.e., ambient temperature of 120 F with no insulation). The single safety valve actuation analysis yielded piping stresses at several points that exceed the FSAR Class I emergency condition allowables in the loop seal piping and relief valve piping. In addition, the downstream piping up to guide RC-H4 had stresses exceeding the FSAR Class I emergency condition allowables. The double safety valve actuation analysis yielded piping stresses at several points that exceeded the FSAR Class I faulted condition allowables in the loop seal piping, the relief valve piping, and the downstream piping up to guide RC-H4.

The piping system, which has sufficient additional dynamic restraints to withstand a seismic event, is under-restrained for a dynamic event with large loading such as safety valve and/or relief valves actuation. The initial large loading, after safety actuation, at lump mass points 52 and 55 (see Figure 8-1) caused the piping system to deflect in the horizontal direction. This initial horizontal movement, in combination with the low vertical piping stiffness, caused the piping to pivot about snubber RC-H40. Snubber RC-H40 is attached to the horizontal run of pipe between lump mass points 806 and 840 by a pipe clamp-snubber arrangement. The pivoting due to the snubber-clamp arrangement yields negative vertical deflections near lump mass point 806 and positive vertical deflections near lump mass point 55. The relief valve piping which has a low vertical stiffness is induced to deflect in the vertical direction by the vertical displacement of the horizontal piping downstream of safety valves PR-3A and PR-3B.

The forces acting on the S/RV piping can be reduced if the loop seal water is maintained at a higher temperature. An average loop seal temperature of 467 F was assumed (this represents a water temperature below 300 F at valve inlet) and the resultant RELAP5/REPIPE calculated forcing functions were applied to the as-built piping system. One safety actuation (PR-3A) yielded piping stresses at several points which exceed the FSAR Class I emergency condition allowables in the loop seal, relief valve and the downstream piping up to guide RC-H4.

As previously discussed, the excessive stress can be traced in part to the relative low vertical stiffness of the S/RV piping. Several points for vertical snubber locations which were judged to restrict the vertical movement of the piping thereby reducing the piping stresses in the piping network were assumed. The piping was reanalyzed simulating these new snubber locations assuming an average loop seal temperature of 467 F with two safety valve actuations.

Two additional vertical snubbers and one guide were assumed and included in the ADLPIPE analysis. One vertical snubber was added about mid-span between variable supports RC-H6 and RC-H7 on the 6-inch downstream piping. A second vertical snubber was added about mid-span between lump mass points 52 and 55 on the 10-inch piping. A horizontal guide perpendicular to snubber RC-H37 was included on the vertical 10-inch riser just below the 10-inch by 4-inch branch connection. All loop seal piping stresses were maintained below FSAR Class I faulted condition allowables. The relief valve piping and the downstream piping exceed the FSAR Class I faulted condition allowables at several points while the majority of the pipe was within allowables.

In addition to the three restraints on the downstream piping, two snubbers and one sway strut were assumed on the relief valve piping and included in the ADLPIPE analyses. Two vertical snubbers were added to the 3-inch piping near variable supports RC-H11 and RC-H12, respectively. One horizontal strut was added on the 3-inch piping between lump mass points 86 and 830. Assuming the six additional restraints, the ADLPIPE analysis was rerun for two safety valve actuations with an average loop seal temperature of 467 F. The loop seal piping stresses were calculated to be below the

FSAR Class I faulted condition allowables. The majority of the downstream piping up to guide RC-H4 had calculated stresses below the FSAR Class I faulted condition allowables; however, several points in the downstream piping slightly exceeded the allowables. The majority of the relief valve piping stresses were calculated to be below the FSAR Class I faulted condition allowables; however, several points slightly exceeded the allowables.

8.4 UPSTREAM PRESSURE OSCILLATIONS

It was observed in CE test run 908 (Crosby 6M6 steam discharge test with high pressure ramp [~300 psi/sec] and a cold water [<200 F] filled loop seal) large pressure oscillations in the upstream of the safety valve. Due to a limitation in the upstream pressure sensor for test 908, the pressure measurements were "clipped" at about 3,400 psia. Subsequently, CE test 1406 which used the same test parameters as test 908 was run with the pressure sensor (PT105) range increased to 10,000 psia. In test 1406 upstream pressure oscillations were measured up to 8,600 psia. These pressure oscillations occurred while the valve was passing the cold water from the loop seal before the valve popped to full open.

Since the 8,600 psia pressure exceeded pressure allowables for the upstream piping, Westinghouse (Reference 22) did a detailed evaluation using the ITCH-1D computer. It was concluded that the large upstream pressure oscillations could be attributed to the frequency of the pressure sensor instrumentation line and the actual pressure oscillations that would be seen in the upstream piping would be less than 5,000 psia. Based on tests and analytical work done by Westinghouse, all acoustic pressures observed or calculated prior to or during safety valve discharge are below the maximum permissible pressure as defined by Westinghouse (see Reference 22).

9.0 RECOMMENDATIONS AND ACTION PLAN

As discussed in Subsection 8.3.2, the stress allowables for faulted conditions were exceeded in the safety and relief valve upstream and downstream piping when simulating the safety valve discharge loadings and associated pipe stresses using the present piping configuration with cold loop seals. The hot loop seal simulation also exceeded upstream piping stress allowables in some locations for the present piping configuration. Scoping studies indicated that the stresses were reduced significantly by placing snubbers at certain locations in the Kewaunee downstream piping. Based on these studies the following alternatives to the present Kewaunee safety valve and piping configuration will be evaluated.

(1) Evaluate the piping stress for cold loop seal discharge, optimizing the location of snubbers at various positions in the downstream piping. (The location of snubbers will primarily be restricted to space limitations.)

(2) Evaluate the piping stress for a hot loop seal discharge, optimizing the locations of snubbers at various positions in the downstream piping. The loop seal water can be heated by wrapping the loop seal piping with mirror insulation and sufficiently insulating the drain pipe at the bottom of the loop and the support strut adjacent to the safety valve. Preliminary discussions with Diamond Power-Mirror Insulation have indicated that the heating of the loop seal water can be accomplished by insulation. The limitation in heating the loop seal water is that the Crosby valve with loop seal internals cannot be exposed to water greater than 300 F.

(3) Evaluate the piping stress for a very hot loop seal (greater than 500 F), optimizing the location of snubber at various positions in the downstream piping. For this alternative, the safety valves must be replaced.

(4) Use the optimized location of snubber at various positions in the downstream piping and drain the loop seal so a steam environment

will exist in the loop seal piping. A continuous draining mechanism could be constructed by using the present loop seal drain pipe connected back into the pressurizer below the water level. The plant safety impact of doing this must be evaluated with respect to the drain piping and pressurizer interface.

Another implication of this alternative is the heat loss in the loop seal piping and in the drain pipe may be significant enough to reduce plant performance so insulation may be required for this piping. Also, the present safety valve must be replaced with a safety valve with steam internals.

(5) Place rupture disc or a spring loaded disc at the end of the first vertical discharge piping run. This rupture disc could be designed so that much of the jet impingement force would be impacted on the piping system to counter balance the thrust force of the discharging safety valve. The disc could be set to open at some predetermined force allowing the water slug to flow out of the discharge piping network and into the pressurizer vault. A spring loaded disc would have the advantage of resetting once the intial pressure surge has subsided thereby reducing the amount of water flowing into the pressurizer vault. The present safety valve could be used with a cold loop seal. A long plant outage may be required to install the pressure/water relief disc.

(6) The last alternative to investigate is to cut the loop seal out and place the safety valve on the vertical pipe exiting the pressurizer and in line with horizontal discharge piping. This alternative would require the replacement of the safety valves and a long plant outage to replace the piping.

If the first two alternatives listed above do not provide acceptable results, it is anticipated that alternatives (3) through (6) will be studied to assign a priority according to feasibility, impact on plant safety, and cost. It is estimated that 2 months will be required to study these alternatives.

Once a selection of the most plausible alternative is made, it is estimated that 6 months will be required to specify the new design and evaluate the new loads/stresses and issue appropriate documents.

10.0 REFERENCES

(1) NUREG-0578, "TMI-2 Lessons Learned Task Force Status Report and Short-Term Recommendations," Item 2.1.2, September 1979.

(2) NUREG-0660, "NRC Action Plan Developed as a Result of the TMI-2 Accident," Item II.D.1, May 1980.

(3) NUREG-0737, "Clarification of TMI Action Plan Requirements," Item II.D.1, November 1980.

(4) NRC letter, Eisenhut to All Licensees and Applicants, Subject: Revised Schedule for Completion of TMI Action Plan Item I.D.1, Relief and Safety Valve Testing (Generic Letter No. 81-36), September 29, 1981.

(5) "Kewaunee Nuclear Power Plant-Final Safety Analysis Report" Volumes 1-5, Wisconsin Public Service Corporation.

(6) "EPRI PWR SAFETY AND RELIEF VALVE TEST PROGRAM VALVE SELECTION/ JUSTIFICATION REPORT," MPR Associates, Inc., EPRI Research Project V102, Interim Report, (December 1981).

(7) "Equipment Specification 676279 - Pressurizer Safety Valves," Westinghouse Electric Corporation, Atomic Power Division (7/17/70).

(8) "Control Valve" Masoneilan International, Inc., 20,000 Series, Model No. 38-20721, Drawing No. CPI-18-55 Rev. J, (4/16/73).

(9) S/RV Isometric, "Reactor Coolant System Line 112," No. SKM-1526, Flour Power Services, Inc., (7/10/79).

(10) "Flow Diagram Reactor Coolant System," No. X-K100-10-P, Pioneer Service and Engineering Co., (1/25/72).

(11) "Nozzle Type Safety Relief Valve," Crosby Valve & Gage Co., Wrentham, Mass., Drawing No. H-52137-1, Rev. B. (5/30/74).

(12) William W. Clark, et. al., "EPRI/WYLE POWER OPERATED RELIEF VALVE TEST REPORT - PHASE III," EPRI Research Project V102-11, Wyle Laboratories, Interim Report, (March 1982).

(13) "Equipment Specification 676270-PORV," Westinghouse Electric Corporation, Atomic Power Division, (12/2/70).

(14) "EPRI/C-E PWR SAFETY AND RELIEF VALVE TEST PROGRAM SUMMARY PROGRAM DESCRIPTION," C-E Power Systems, Combustion Engineering, Inc.

(15) M. A. Langerman, et. al., "Application of RELAP5/MOD1 for Calculation of Safety and Relief Valve Discharge Piping Hydrodynamic Loads," Intermountain Technologies, Inc., Interim Report, (March 1982).

(16) J. A. Trapp, "Descriptive Evaluation of RELAP5," NP-2361 EPRI Research Project 1938-2, Practical Analysis and Computing, Inc., (April 1982).

(17) Richard J. Wagner, et. al., "RELAP5/MOD1 Code Manual Volume 2: Users Guide and Input Requirements," EG&G, Idaho, Inc., NUREG/CR-1826 Revision 2, (September 1981).

(18) Victor H. Ransom, et. al., "RELAP5/MOD1 Code Manual Volume 1: System Models and Numerical Methods," EG&G, Idaho, Inc., NUREG/CR-1826 Revision 2, (September 1981).

(19) "Piping Load Data for CE 900 Series Tests," EPRI letter data (December 11, 1981).

(20) "ADLPIPE Static and Dynamic Pipe Design and Stress Analysis," Arthur D. Little, Inc., Cambridge, Mass., input preparation manual version 10, August 1980.

(21) USA Standard Code for Pressure Piping, USAS B31.1.0-1967.

(22) E. M. Burns, et. al., "Review of Pressurizer Safety Valve Performance as Observed in the EPRI Safety and Relief Valve Test Program," Westinghouse Report, (to be issued July 1982).

(23) Original Stress Report, "Reactor Coolant System Line 112," Pioneer Service and Engineering Co., (June 9, 1971).

APPENDIX A

RELAP5 CODE DESCRIPTION

APPENDIX A
RELAP5 CODE DESCRIPTION

A.1 INTRODUCTION

The RELAP5/MOD1 computer code is described in this Appendix. The RELAP5/MOD1 code is a result of continued development beginning with the RELAP5/MODO code which was released to the National Energy Software Center (NESC), May 1979. The objective was to produce a more complete light water reactor (LWR) transient analysis capability. The MODO version was a pressurized water reactor (PWR) blowdown code. The MOD1 version extended the MODO capability to include models unique to small break situations and to include added capabilities for modeling accumulators, noncondensible gas, nucleonics, control systems, separators, and boron concentrations. The MOD1 code contains improvements in the flow regime maps, choked flow models, general code running time, and output edit.

The RELAP5/MOD1 code manual is self-contained and repeats some of the basic development material presented in the RELAP5/MODO code manual (Reference A-1). The repeated material has been appropriately revised to reflect the content of the MOD1 code version. One revision was made to RELAP5. This revision is presented in Table A-1.

A.2 GENERAL FEATURES OF RELAP5 AND COMPARISON TO RELAP4

The principal feature of RELAP5 (see References A-3 and A-4) is the use of a two-fluid, five-equation hydrodynamic model for two-phase flow. The five equations are a mass conservation equation for each phase, a momentum conservation equation for each phase, and an overall energy conservation equation. The one energy equation is supplemented by the assumption that one of the phases is at the saturated state. These equations allow a full two-velocity treatment and an adequate treatment of unequal temperature effects. Metastable states are allowed during vaporization and condensation. This advanced model replaces the one-fluid model with slip used in RELAP4. The new model also replaces RELAP4 submodels such as the bubble rise and enthalpy transport models.

RELAP5 relies exclusively on the two-fluid model with the possibility of using specialized constitutive relations in different parts of the

TABLE A-1. UPDATES TO CORRECT AIR-WATER STATE LOGIC

```
*COMPILE DEFINE,SECDIR
*IDENT ITIJAN82
*I  HXCR008.1094
C DONT CALL STH2X0  IF TG IS BEYIND CRITICAL
      IF(TG.GT.647.299) GO TO 267
*I HXCR008.1099
  267   CONTINUE
*/
*/ ****************ALL FOLLOWING UPDATES ARE TO ROUTINE STATE********
*/
*D HXCR008.1290
C IF PRESSURE EXCEED CRITICAL PRESSURE SET TMAX TO CRITICAL TEMP
C AND DONT CALL PSATPD ROUTINE.
 257  CONTINUE
      IF(P(I).GT.2.212E+07) GO TO 258
      CALL PSATPD(TMAX,P(I),DPDT,2,ERX)
*I HXCR008.1291
      GO TO 259
 258  CONTINUE
      TMAX=647.299
 259  CONTINUE
*D HXCR008.1339
 251  CONTINUE
      IF(IEF.NE.1) GO TO 252
      WRITE(OUTPUT,2000) TSAT,P(I),DTT
2000  FORMAT("0STATE FAILURE(LABEL 2000) FOR AIR-WATER EQUILIBRIUM STATE
     X CALCULATION."/1X," TRY RERUNNING USING NON-EQUILIBRIUM OPTION"
     X /1X,"TSAT  P(I) AND DTT ARE ",3E15.6)
      GO TO 1010
 252  CONTINUE
*I HXCR008.1478
C IF TEMP IS BEYOUND CRITICAL PT THEH CALL STH2X3 FOR LIQ PROPERTY
      IF(TF.GT.647.299) GO TO 514
*I HXCR008.1482
 514  CONTINUE
*D HXCR008.1515
2007  FORMAT("0 STATE ROUTINE(LABEL 2007) ERROR WITH AIR-WATER"
     X      /1X,"STATE OF AIR-WATER MIXTURE DOES NOT CONVERGE AFTER 20 IT
*D HXCR008.1544,1553
        SATT(I)=TMAX
*I HXCR008.1590
C DONT CALL STH2X0 IF TG IS GT CRITICAL TEMPERATURE
      IF(TG.GT.647.299) GO TO 271
*I HXCR008.1593
 271  CONTINUE
*D HXCR008.1628
      TG=AMAX1(TG-DTG,273.1601)
*D HXCR008.1630
     X   ) II=II+1
*D HXCR008.1636
2004  FORMAT("0  *******ERROR****STATE ROUTINE(LABEL 2004)  *ERROR*** "
     X      /1X,"STATE OF AIR-WATER MIXTURE DOES NOT CONVERGE AFTER 20 IT
*I HXCR008.1667
      IF(ERX) WRITE(OUTPUT,2010) PS
2010  FORMAT("0 ****ERROR***STATE FAILURE ON PSATPD CALL(LABEL 2010)
     X  PS=  ",E15.6)
*I HXCR008.1688
      IF(ERX) WRITE(OUTPUT,2011) PS
2011  FORMAT("0 ****ERROR***STATE FAILURE ON PSATPD CALL(LABEL 2011)
     X  PS=  ",E15.6)
*I HXCR008.1796
      IF(ERX) WRITE(OUTPUT,2012) TF
2012  FORMAT("0 ****ERROR***STATE FAILURE ON PSATPD CALL(LABEL 2012)
     X  PS=  ",E15.6)
*I HXCR008.1799
      IF(TG.GT.647.299) GO TO 310
*I HXCR008.1803
 310  CONTINUE
*D HXCR008.1846,1849
      TG=AMAX1(TG-DTG,273.1601)
      TF=AMAX1(TF-DTT,273.1601)
      IF(TF.EQ.273.1601 .OR.TG.EQ.273.1601) II=II+1
*D HXCR008.1855
2006  FORMAT("0   *****ERROR*****STATE ROUTINE(LABEL 2006)"
     X      /1X,"STATE OF AIR-WATER MIXTURE DOES NOT CONVERGE AFTER 20 IT
*D HXCR008.1902
C FORCE EQUAL TEMP APPROXIMATION ONLY IF STEAM IS SUBCOOLED MORE
C THAN 20C BELOW SATURATION TEMP( THE LIQUIDS TEMP)
      IF(TF.GT.TG+20.0) GO TO 400
*D HXCR008.2029
C FORCE EQUAL TEMP APPROXIMATION ONLY IF LIQUID IS SUPERHEATED MORE
C THAN 20C ABOVE SATURATION TEMP( THE VAPOR TEMP)
      IF(TF.LT.TG+20.0) GO TO 395
*D HXCR008.1945
2005  FORMAT("0 ******ERROR*****STATE ROUTINE(LABEL 2005) "
     X      /1X,"STATE OF AIR-WATER MIXTURE DOES NOT CONVERGE AFTER 20 IT
*I HXCR008.2048
C DONT CALL STH2X0 IF TG IS GT CRITICAL TEMPERATURE
      IF(TG.GT.647.299) GO TO 401
*I HXCR008.2053
 401  CONTINUE
*I HXCR008.2073
C IF TEMP  IS BEYOND CRITICAL PT THEN PSAT DOESNT EXIST
      IF(TG.GT.647.299) GO TO 409
*I HXCR008.2076
 409  CONTINUE
*D HXCR008.2103
      TG=AMAX1(TG-DTG,273.1601)
*D HXCR008.2105
     X   ) II=II+1
*D HXCR008.2116
2009  FORMAT("0                 ******ERROR*****STATE ROUTINE(LABEL 2009)  "
     X      /1X,"STATE OF AIR-WATER MIXTURE DOES NOT CONVERGE AFTER 20 IT
```

system. RELAP5 is designed to be primarily a one-dimensional program and this version has only one-dimensional volumes. The finite difference approximations to the conservation equations assume that fluid enters or leaves a one-dimensional volume only at its end. Thus, when following a mixture level is important or when a large spatial enthalpy gradient occurs such as in the reactor core, a larger number of volumes should be used with RELAP5 than with RELAP4. Given a large vertically oriented vessel with several pipes leaving at various elevations, RELAP4 might model that with one volume with junctions attached at the different elevation levels. When the vessel contains two-phase fluid with the liquid settling towards the bottom due to gravity, the bubble rise model would determine the varying mixtures of liquid and vapor entering the junctions. With RELAP5, separate volumes would be defined so that the different elevations of the pipes would be correctly modeled.

There are several reasons for the RELAP5 approach. First, the larger memories of current computers allow this approach to be implemented. Second, the superimposed models, especially the bubble rise model, are not compatible with the two-fluid equations which permit dynamic slip. Third, the superimposed models are themselves differential equations, and when combined with the basic hydrodynamic equations and the logic to merge them, the RELAP4 hydrodynamic model is more complex than the RELAP5 model. Careful consideration of storage requirements and coding practices has made it possible for RELAP5 with its larger number of volumes and junctions but simpler logic to be more cost effective than RELAP4.

Test problems have demonstrated the superiority of the RELAP5 approach. Tests with vertical pipes have shown the capability of the program to compute a sharp water-liquid interface to within one volume. Excellent agreements have been achieved with several experiements. In the limited cases where there are comparable RELAP4 and RELAP5 simulations, RELAP5 provides superior results. A feature in RELAP5, not available in RELAP4, allows a time advancement with excessive error to be discarded, and the advancement to be redone with smaller time steps.

It was stated above that the volumes currently allowed in RELAP5 are one-dimensional and flow was assumed to enter or leave a volume only at the

ends. A branching capability provides for the merging and splitting of flow paths. Several components of hydrodynamic systems such as tees have multidimensional phenomena. An application technique of the branching capability is presented that allows modeling of these components.

RELAP5, with its improved hydrodynamics, does not require the modeling care required with RELAP4/MOD5. The user can quite easily apply the principles of RELAP5 to model his pipe network. Although the user must ensure convergence of his problem calculation, the absence of specific program models such as bubble rise, slip, etc., reduces this task considerably.

A.3 RELAP5/MOD1 CAPABILITY

An assessment of RELAP5/MOD1 capabilities is presented in Reference A-2. Most applications discussed are checkout applications of the code and are described in more detail in Volume 3 of Reference A-1.

The RELAP5/MODO code is a one-dimensional, transient system analysis code designed for analyses of LWR LOCA and non-LOCA transients. Development of this version was terminated at a somewhat arbitrary point as a result of an NRC decision. Subsequent development of RELAP5 continued in support of experimental programs at the Idaho National Engineering Laboratory (INEL). The RELAP5/MOD1 code is the product of this continued development.

During development of RELAP5/MOD1, the code was used extensively for pre- and posttest predictions in the LOFT and Semiscale experimental programs at the INEL. Most of these experiments were small break LOCA's that motivated extension of RELAP5/MODO modeling to include mechanistic processes peculiar to small break phenomena. The transient calculations for small break experiments span time periods composed of thousands of seconds. Thus, calculational speed has become increasingly important. The calculational speed and modeling accuracy with RELAP5/MOD1 represent significant improvement over those available in past codes. While RELAP5/MOD1 is a significant step toward the goal of a complete LWR system code, there remain several areas that must continue to be developed. These include: thermal-hydraulic and fuel behavior under reflood conditions, even faster running capability, and increased user-conveniences.

RELAP5/MOD1 overall capability has been successfully applied to a wide range of problems. These applications include many separate-effects tests such as Edwards Pipe Blowdown Experiment, the Moby Dick Tests, the Mariken Experiment, the LOFT Wyle Orifice Calibration Tests, and the General Electric Corporation (GE) Level Swell Tests. The first two of these experiments (documented in the MODO manual) are representative of the RELAP5/MOD1 capability. Examples of application to the Mariken Test, LOFT Wyle Test, and GE Level Swell Test are given in Reference A-1. The code produced results in good agreement with the data in all the cases listed. Figure A-1 is a comparison of predicted and calculated mass discharge rates for Mariken Test 24. This application is a good test of the subcooled choked flow model and the code's ability to model liquid level in a tank. The LOFT Wyle Orifice Calibration Test requires modeling of stratified flow in a horizontal pipe as well as flow in a vertical vessel component. The predicted mass discharge rate is compared with data shown in Figure A-2. This experiment includes periods of subcooled and stratified two-phase choked flow discharge.

RELAP5/MOD1 was applied in the Semiscale and LOFT experimental programs at the INEL for experiment planning, pretest prediction, and posttest analyses. Several of these applications were selected as checkout problems presented in Volume 3 of Reference A-1. The best example to illustrate the overall system capability of the code is the application to LOFT Test L3-7. This is a small break test and pre- and posttest calculations were made with RELAP5. The pretest prediction of the system pressure is compared with the data shown in Figure A-3. The posttest calculation of the system pressure with only the steam generator main steam control valve leakage rate changed to correspond to the actual leak rate is compared with the data in Figure A-4.

RELAP5 utilizes mechanistic process models where possible, avoiding the use of optional models to describe the same phenomena. This leads to less ambiguity in system modeling and provides viable results with fewer trained personnel.

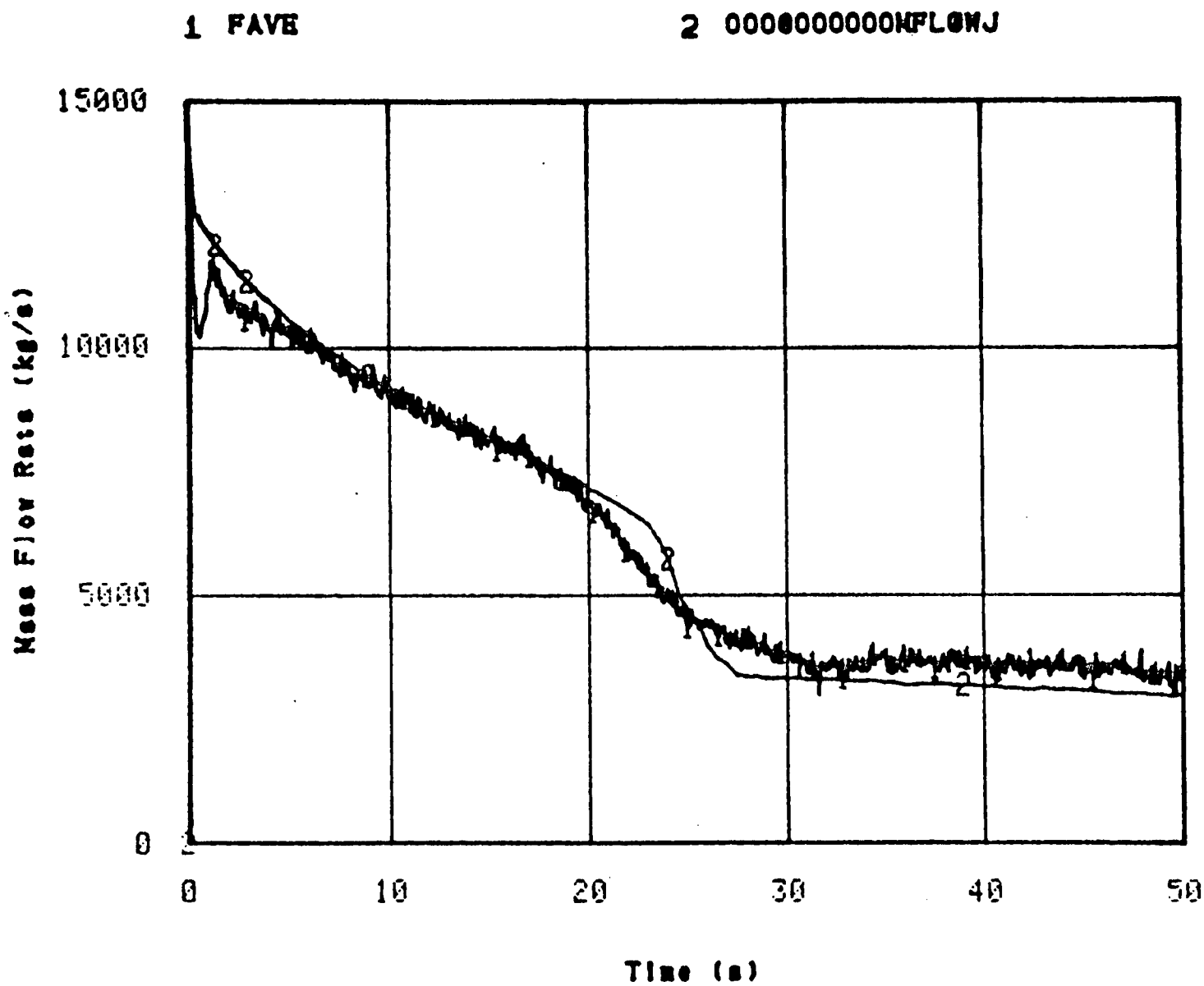

FIGURE A-1
MARIKEN TEST 24 MASS FLOWS*

*Taken from Reference A-4

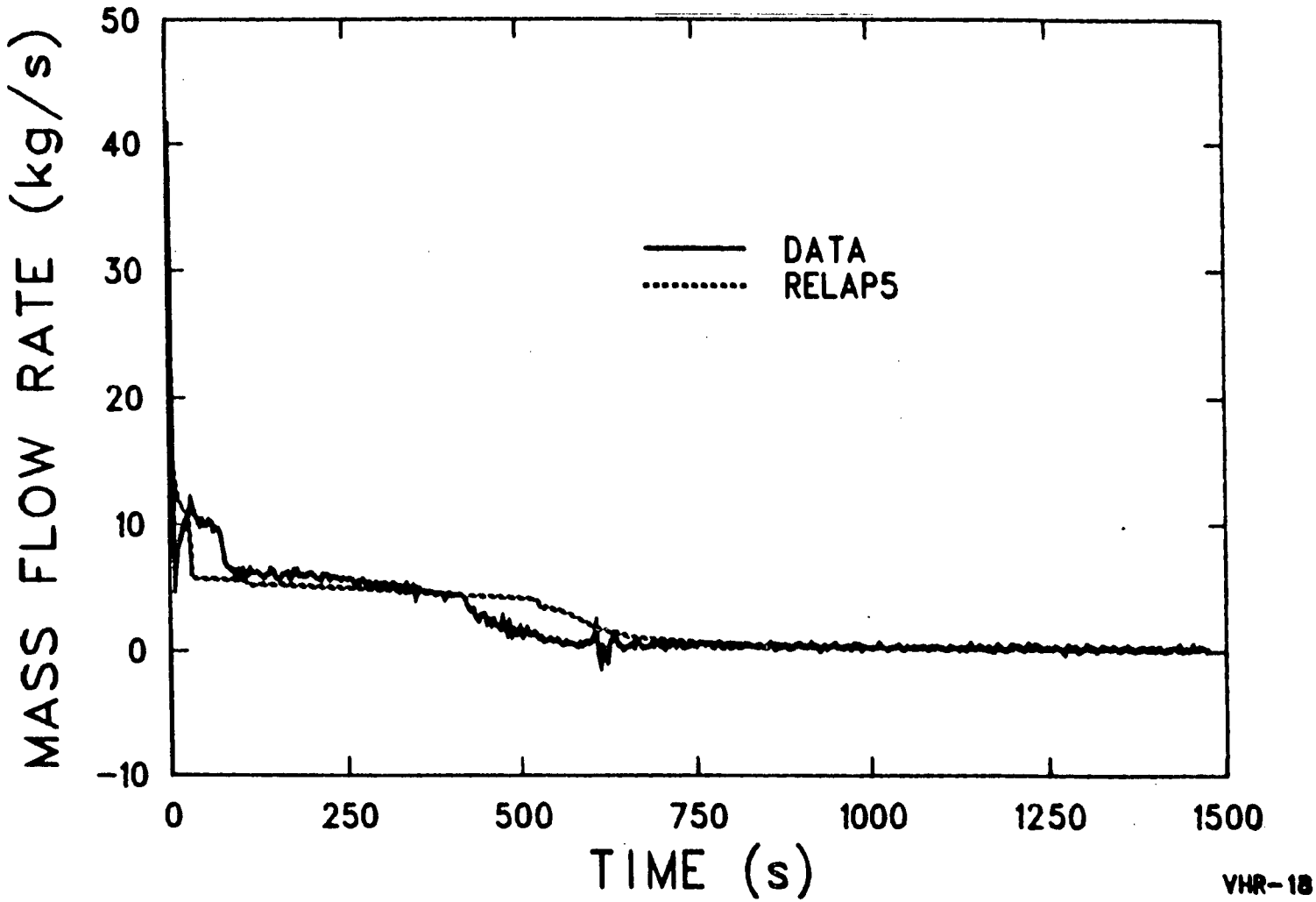

FIGURE A-2
RELAP5 WYLE SMALL BREAK TEST MASS FLOW*

*Taken from Reference A-4

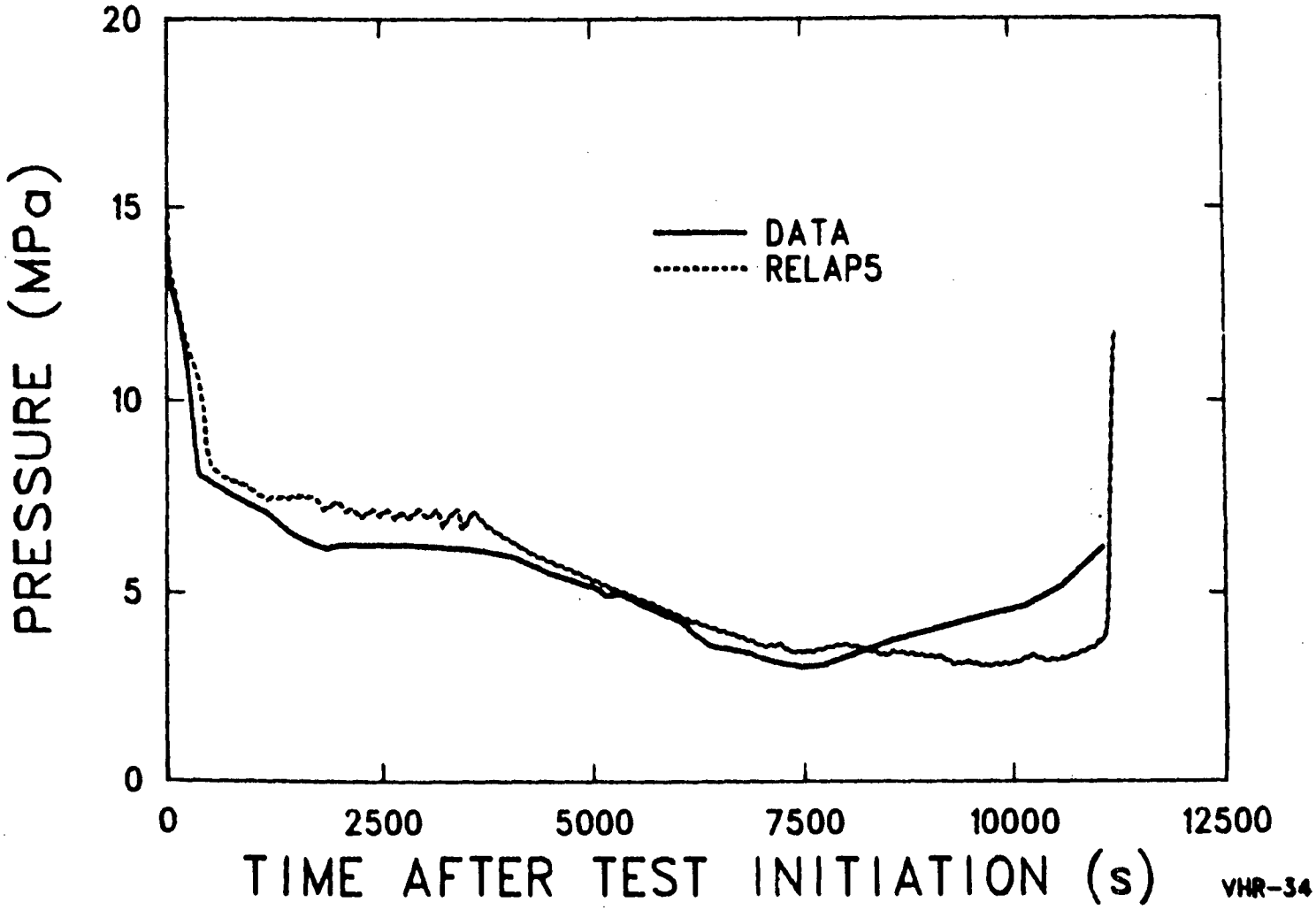

FIGURE A-3
RELAP5 LOFT L3-7 PREDICTION SYSTEM PRESSURE*

*Taken from Reference A-4

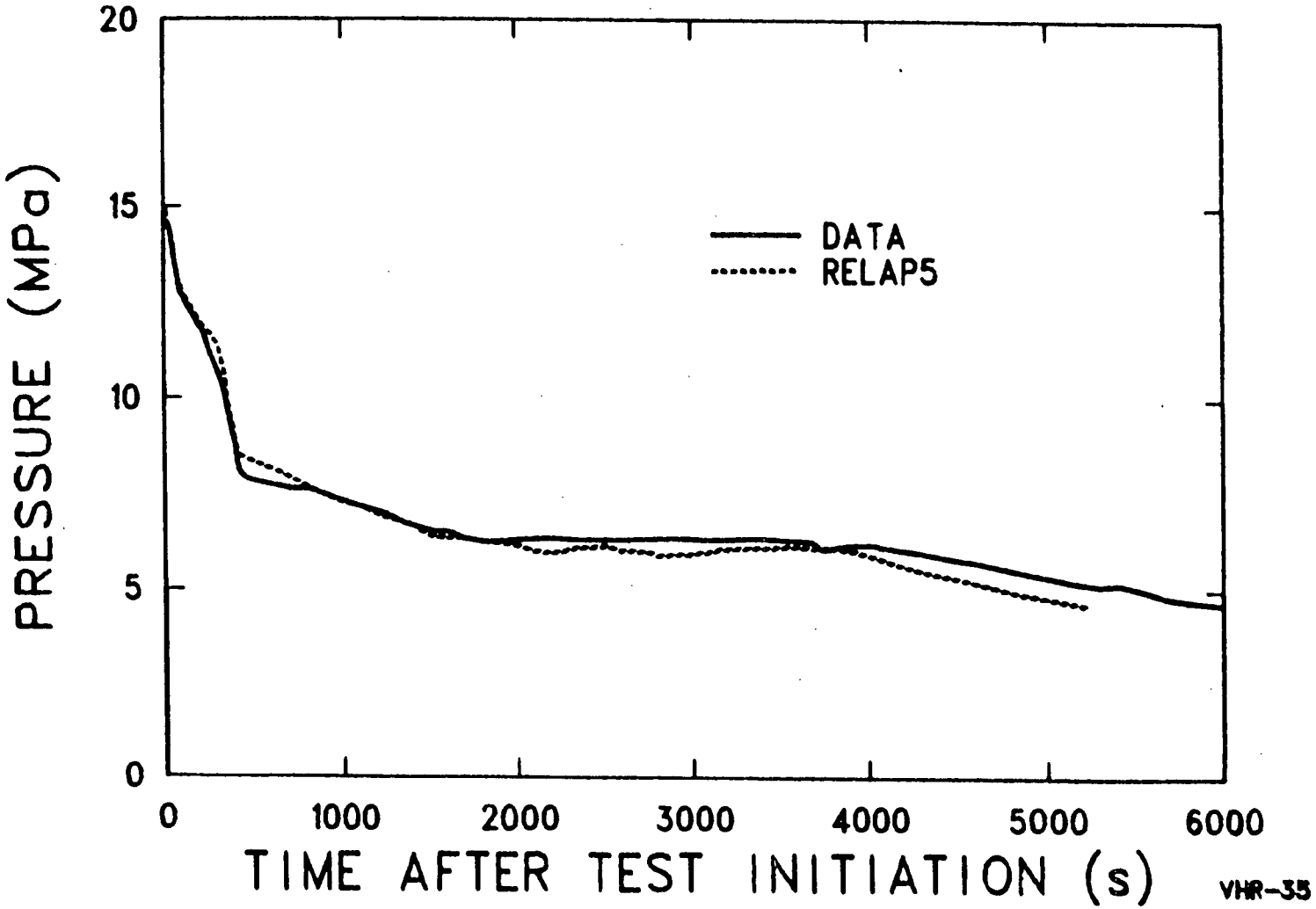

FIGURE A-4
RELAP LOFT L3-7 POSTTEST SYSTEM PRESSURE*

*Taken from Reference A-4

A.2.1 Numerical Scheme

The RELAP5 numerical scheme is based on a linear, semi-implicit, finite-difference integration scheme. The implicitness and use of donor-differencing for convective fluxes is sufficient to ensure stability for all time steps smaller than the material transport limit, and the linearity makes direct time step solution possible. Both of these factors contribute to fast execution. The stability has been tested numerically, applying the code to problems with exact analytical steady-state solutions and verifying that the transient calculation converges to the steady-state result. The stability was also tested in numerous cases with sudden changes imposed at boundaries. The transient results were calculated without evidence of numerical instability.

The basic numerical hydrodynamic model was developed in a pilot code where the stability, accuracy, and fast execution capability could be readily evaluated. Once these characteristics were established, the model was integrated into an efficient, user-oriented system code structure.

A.2.2 Development of the Hydrodynamic Model

The hydrodynamic model was selected after careful review of other advanced two-phase model development efforts. It was concluded that the model most consistent with existing knowledge is a five-field equation, two-fluid model. The model consists of the two phasic continuity equations, the two phasic momentum equations, and an overall energy equation. In this model, only two interphase constitutive relations are required: those for interphase drag and interphase mass exchange. An additional specification (that one-phase exists at the local saturation state) eliminates the need to specify energy transfer partitioning, either interphase or from the wall.

Special process models have been developed for abrupt area changes, branching, choking, pumps, accumulators, core neutronics, control systems, and valves. The fluid process models are based on the RELAP5 hydrodynamic model for quasi-steady conditions. This approach eliminates the need for localized fine nodalization and the attendant computational speed limitations resulting from a greater number of nodes and decreased Courant limit.

Some process and component models were obtained with little or no development work by transforming existing RELAP4 models to International System of Units (SI) and dynamic storage compatible with RELAP5. Examples of models obtained in this manner are those for pumps, valves, trips, neutronics, and certain input features.

A.4 RELAP5 EVALUATION OF S/RV

RELAP5 was used to evaluate the results of EPRI/Combustion Engineering test 908. A description of this evaluation is presented in Section 6.0 of this report. RELAP5 evaluations were also made as part of the EPRI S/RV test program and are presented in Reference A-5. As shown in Section 6.0 of this report, RELAP5 calculations provided good agreement with several of the CE test cases.

A.5 RELAP5 VERIFICATION

The execution of RELAP5 at three computer facilities was verified by comparing calculated results provided by INEL for the Edward's Pipe Prober with RELAP5 results calculated at the three computer facilities. Identical agreement was obtained in each case.

The three facilities are the Control Data Corporation's CDC-176 in Houston, Texas; the United Computer Corporation's CDC-176 in Dallas, Texas; and the Babcock & Wilcox CDC-7600 in Lynchburg, Virginia.

A.6 REFERENCES

(A-1) R. J. Wagner, et. al.," RELAP5/MODO User's Manual," Volumes 1-3, CDAP-TR-057, (May 1979).

(A-2) J. A. Trapp, "Descriptive Evaluation of RELAP5," NP-2361 EPRI Research Project 1938-2, Practical Analysis and Computing, Inc., (April 1982).

(A-3) Richard J. Wagner, et. al., "RELAP5/MOD1 Code Manual Volume 2: Users Guide and Input Requirements," EG&G, Idaho, Inc., NUREG/CR-1826 Revision 2, (September 1981).

(A-4) Victor H. Ransom, et. al., "RELAP5/MOD1 Code Manual Volume 1: System Models and Numerical Methods," EG&G, Idaho, Inc., NUREG/CR-1826 Revision 2, (September 1981).

(A-5) M. A. Langerman, et. al., "Application of RELAP5/MOD1 for Calculation of Safety and Relief Valve Discharge Piping Hydrodynamic Loads," Intermountain Technologies, Inc., Interim Report, (March 1982).

APPENDIX B

REPIPE PROGRAM DESCRIPTION

APPENDIX B
REPIPE PROGRAM DESCRIPTION

B.1 BASIC APPROACH AND CODE STRUCTURE

B.1.1 Basic Equations

REPIPE is based on the formulation devised by Moody (see Reference B-1) for calculation of the time dependent loading on a piping system. However, the approach used may be best explained by the treatment of Lahey and Moody (see Reference B-2).

To obtain the time dependent force acting on a piping segment, consider the portion of pipe between the two elbows in Figure B-1. The volume of fluid contained within the elbows is assumed to be small compared to the total volume of the segment. The forces acting on the segment may be broken into two groups. The first group contains the forces F_{11}, P_1, F_{22}, and p_2A_2 which have lines of action parallel to the pipe segments joined to each end of the control volume. The second group, forces F_1 and F_2, are parallel to the axis of the pipe segment under consideration. The ambient pressure, p_a, acts on the outer surface of the pipe and cancels everywhere except at areas A_1 and A_2. The force F_s is the wall shear.

The forces acting on the segment may be obtained by writing the momentum conservation equations. For the direction parallel to the segment axis, the following equations can be written.

$$F_1 - F_s - F_2 = [F_{11} - (p_1 - p_a)A_1 - (G_1^2 A_1)/(g_c\rho_1)]\cos\gamma_1$$
$$-[F_{22} - (p_2 - p_a)A_2\cdot(G_2^2A_2)/(g_c\rho_2)]\cos\gamma_2 + (1/g_c)\frac{\partial}{\partial t}\int_o^L GAdz \qquad (1)$$

Somewhat simpler momentum equations can be written by considering the control volume to be divided into two parts by the double dashed line shown in Figure B-1. This boundary is normal to the pipe axis. A momentum balance in this direction can be written for the left and right hand portions of the volume and is given as follows.

---

*Parts of this code description were taken from "Evaluation of the RELAP4/REPIPE System for Calculation of Transient Piping Forces on Systems Containing Water and Steam," Control Data Corporation, (July 1978).

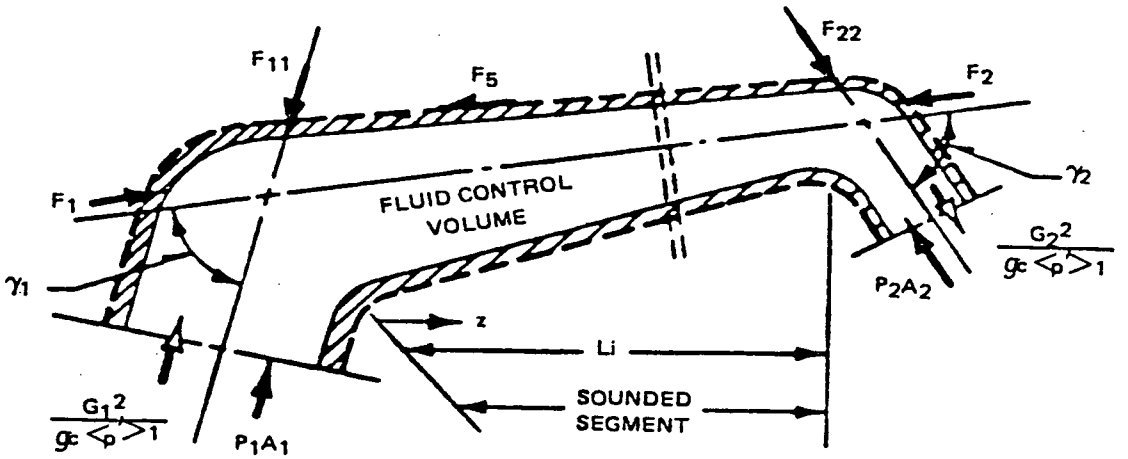

a. PIPE REACTION FORCES

FIGURE B-1
BOUNDED PIPING CONTROL
VOLUME*

*Extracted from [B-2]

$$[F_{11} - (p_1 - p_a)A_1 - (G_1^2 A_1)/(g_c \rho_1)]\sin\gamma_1 = 0 \quad (2)$$

$$[F_{22} - (p_2 - p_a)A_2 - (G_2^2 A_2)/(g_c \rho_2)]\sin\gamma_2 = 0 \quad (3)$$

Equations (1), (2), and (3) may be combined to obtain what Moody calls the "wave force," F_w and is given by

$$F_w = F_1 - F_2 - F_s = (1/g_c)\frac{\partial}{\partial t} \int_o^L GAdz \quad (4)$$

This wave force is due to the fluid acceleration and leads a thrust parallel to the direction of the fluid flow. The major reaction force, exerted by the pipe restraints, is then also parallel to the fluid flow.

A segment of the type just considered is designated as a "bounded" segment. One must also consider an open segment in which the fluid is discharging to the atmosphere. The force on such a segment can be obtained by considering the pipe segment of Figure B-1 but with $\gamma_2 = 0$, under conditions $F_{22} = 0$. By combining Equations (1) and (3), the force, F_N, on the discharging segment is given by

$$F_N = (1/g_c)\frac{\partial}{\partial t} \int_o^L GAdz + (p_2 - p_a)A_2 + (G_2^2 A_2)/(g_c \rho_2) \quad (5)$$

The force F_N may be considered the sum of the so-called wave force, F_w, and a "blowdown force," F_B, where

$$F_B = (p_2 - p_a)A_2 + (G_2^2 A)/g_c \rho) \quad (6)$$

Although the wave force will disappear at steady-state, the blowdown force will remain. It should be noted that, when the last piping segment is a right angle bend, the blowdown force perpendicular to the flow direction will be of the same magnitude as that given by Equation (6).

B.1.2 Code Structure

REPIPE is a post-processor to RELAP4 (see Reference B-3) and RELAP5 (see Reference B-4). The time-dependent fluid properties, velocity, and acceleration calculated by RELAP4 or RELAP5 are used by REPIPE to calculate pipe loadings.

REPIPE considers the piping to be divided into bounded legs and open legs. The wave forces on the bounded legs are computed via Equation (4) while the sum of wave and blowdown forces on the open leg is computed via Equation (5). The user must specify which flow junctions constitute the boundaries of the various legs and thus assign each RELAP control volume in the piping to one of the legs.

Consider the blowdown of the simple system shown in Figure B-2. The system may be modeled as shown in Figure B-3. The open leg is leg 4 and the reaction force, R_N, on leg 4 is given by

$$R_N = - P_g A_g - \rho_g V_g^2 A_g - \sum_{i=7}^{9} (L_i/g)\ (dW_i/dt) \tag{7}$$

where $W_i = G_i A_i$. Since the fluid acceleration dW_i/dt is calculated in the junction, the junction over which the sum is taken must be specified. The volume which is discharging must also be specified. The pressure at the discharge end will be atmospheric until critical flow occurs, and, at that time, P_g may be substantially above atmospheric.

In the bounded junctions the "wave force" is computed via Equation (4). Thus for leg 2

$$R_N = - \sum_{i=4}^{5} (L_i/g) dW_i/dt) \tag{8}$$

B.2 CODE ASSUMPTIONS AND LIMITATIONS

REPIPE uses a simple and straight forward approach which is based on well-accepted theory. However, it is necessary to recognize that REPIPE computes a one-dimensional approximation to three-dimensional behavior.

Whenever there is a change in piping direction (bend or elbow), forces are exerted in two directions to change the flow directions. Hence, the reaction force has components in two Cartesian directions. To avoid the necessity of a multidimensional approach, REPIPE considers all the piping, except for the length adjacent to the discharge, to be bounded by a bend at either end. Effectively, REPIPE considers the bends to be so placed that the net force on the piping due to direction changes is zero. The forces on the inlet bend exactly cancel the forces on the outlet bend when both

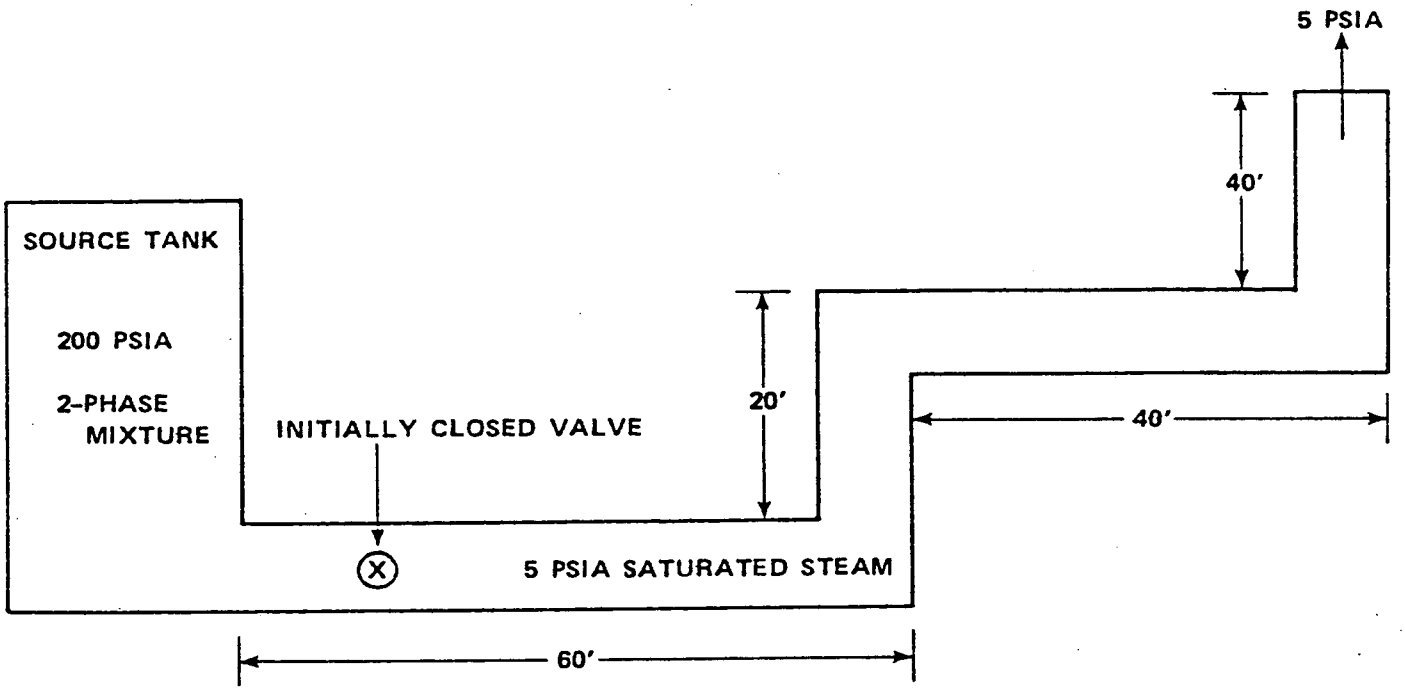

ALL PIPES DIA = 1-2/3 FT
VALVE FULLY OPEN AT 0.05 SEC

FIGURE B-2
ARRANGEMENT FOR BLOWDOWN PROBLEM*

*Taken from Reference B-8

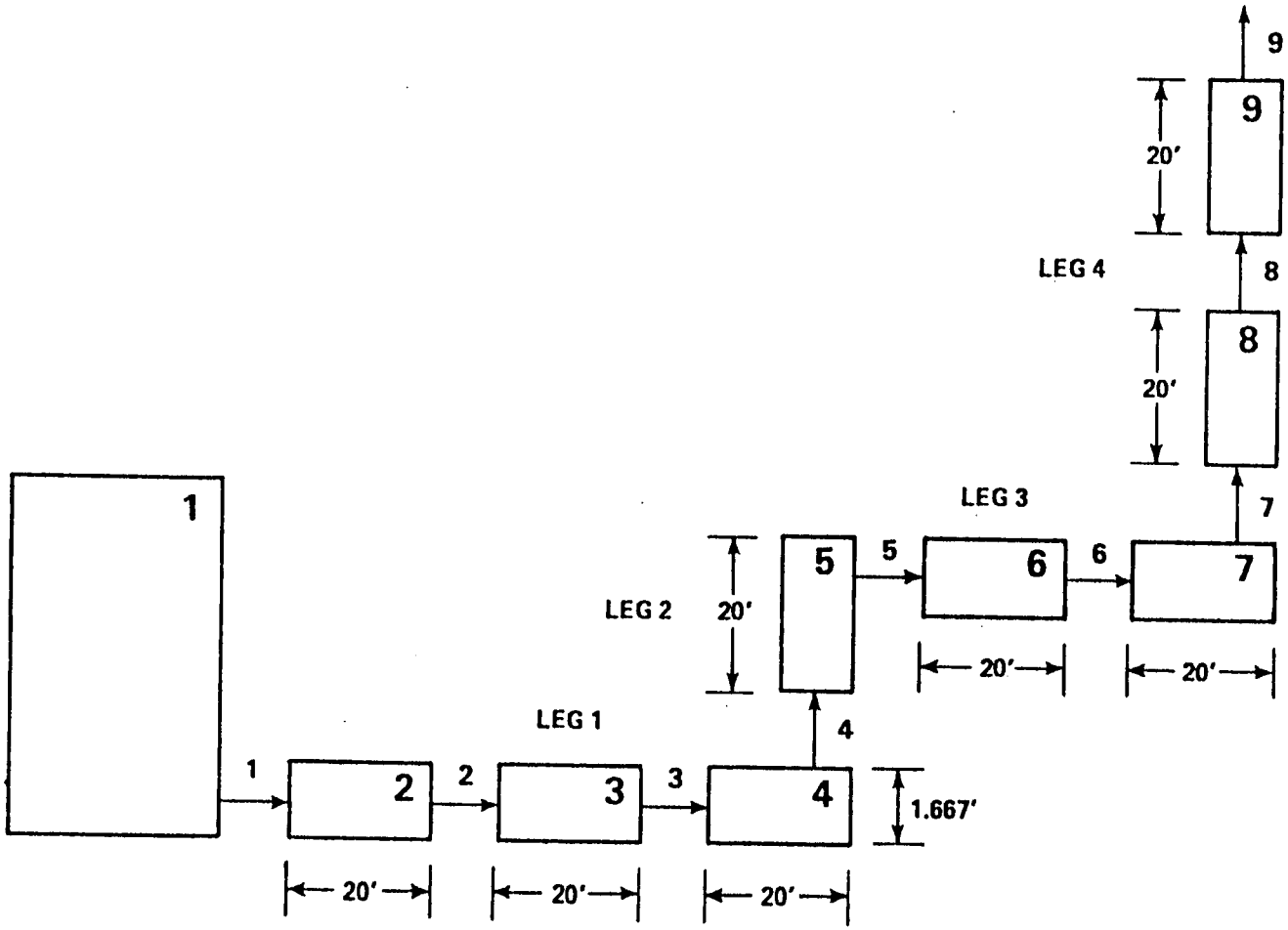

FIGURE B-3
RELAP/REPIPE MODELING OF BLOWDOWN PROBLEM*

*Taken from Reference B-8

bends subtend the same angle and are in the same plane. Obviously, if one bend is in the x-y plane and the other is in the y-z plane, this will not be true. REPIPE calculates the forces in the direction parallel to the axis of each piping segment but does not compute the forces in the two directions orthogonal to the segment axis.

In the unbounded segment at the discharge end of the piping, REPIPE assumes a bend at one end only. The bend is taken to be oriented in a manner such that the force parallel to the piping segment axis which is required to change the fluid direction is acting in the same direction as the force due to fluid acceleration.

It should be noted that both the wave force, defined by Equation (4), and the force on the discharge segment, defined by Equation (6), exclude the frictional, or shear, force on the piping. Thus, to obtain the total external force on the piping along the flow axis, it is necessary to add the frictional force as well as the multidimensional effects not considered by REPIPE.

REPIPE has modified the definitions of F_w and F_N when internal choking occurs within any volume. When such choking occurs, there can be an internal drag force on the pipe far in excess of that which would be calculated by a steady-state analysis. The additional drag force ($\Delta P_{choke} \times A_{choke}$) has therefore been added to the reaction force computed by REPIPE.

B.3 ABILITY OF RELAP4/REPIPE TO PREDICT KNOWN BEHAVIOR

To ascertain the ability of the RELAP4/REPIPE combination to predict piping reaction forces during transients, the program was used to model several problems for which measured forces or analytical solutions were available. The first of the problem chosen was the Edwards and O'Brien (see Reference B-5) blowdown of a 13.44 foot long pipe having an inside diameter of 2.88 inches. Based on results given by the Energy, Inc. (see Reference B-6), the RELAP4 models best fitting the observed pressures were selected and RELAP4 was rerun in conjunction with REPIPE. The geometry of the modeling used for this run is shown in Figure B-4.

The thrust force calculated from the Edwards and O'Brien data is shown in Figure B-5, while the results from REPIPE are shown in Figure B-6. It

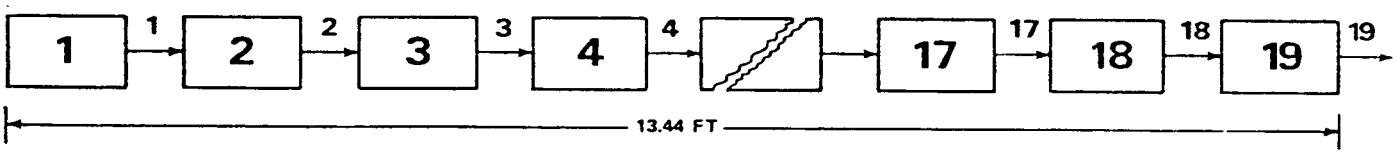

19 EQUAL VOLUMES

GEOMETRY OF EACH VOLUME

LENGTH = 0.70796 FT

AREA = 0.0452 FT^2

DIAMETER = 0.24 FT

VOLUME = 0.032 FT^3

INITIAL CONDITION

ALL VOLUMES 1000 PSIG, 467°F (SUBCOOLED)

FIGURE B-4
RELAP/REPIPE MODEL OF
EDWARDS AND O'BRIEN
EXPERIMENT*

*Taken from Reference B-8

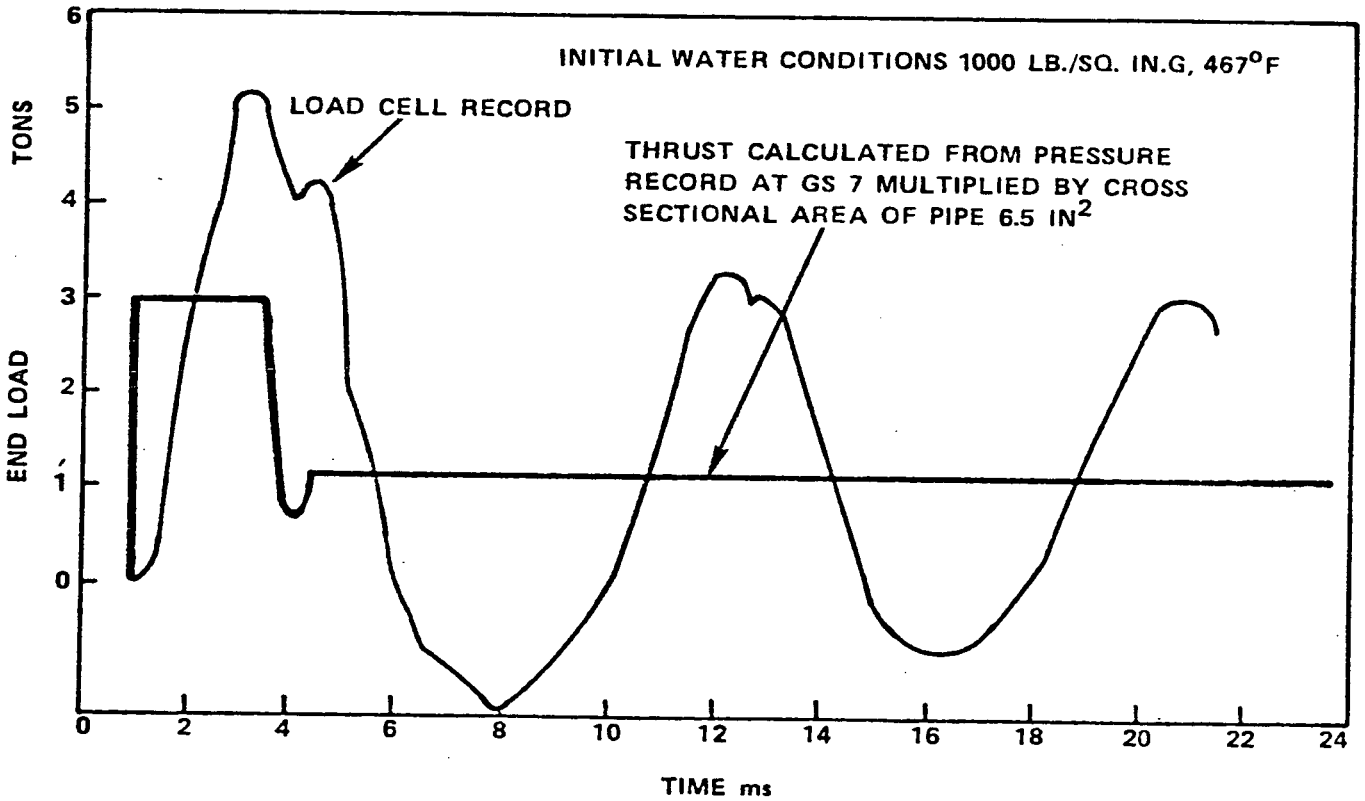

FIGURE B-5
EDWARDS AND O'BRIEN DATA*

*Taken from Reference B-8

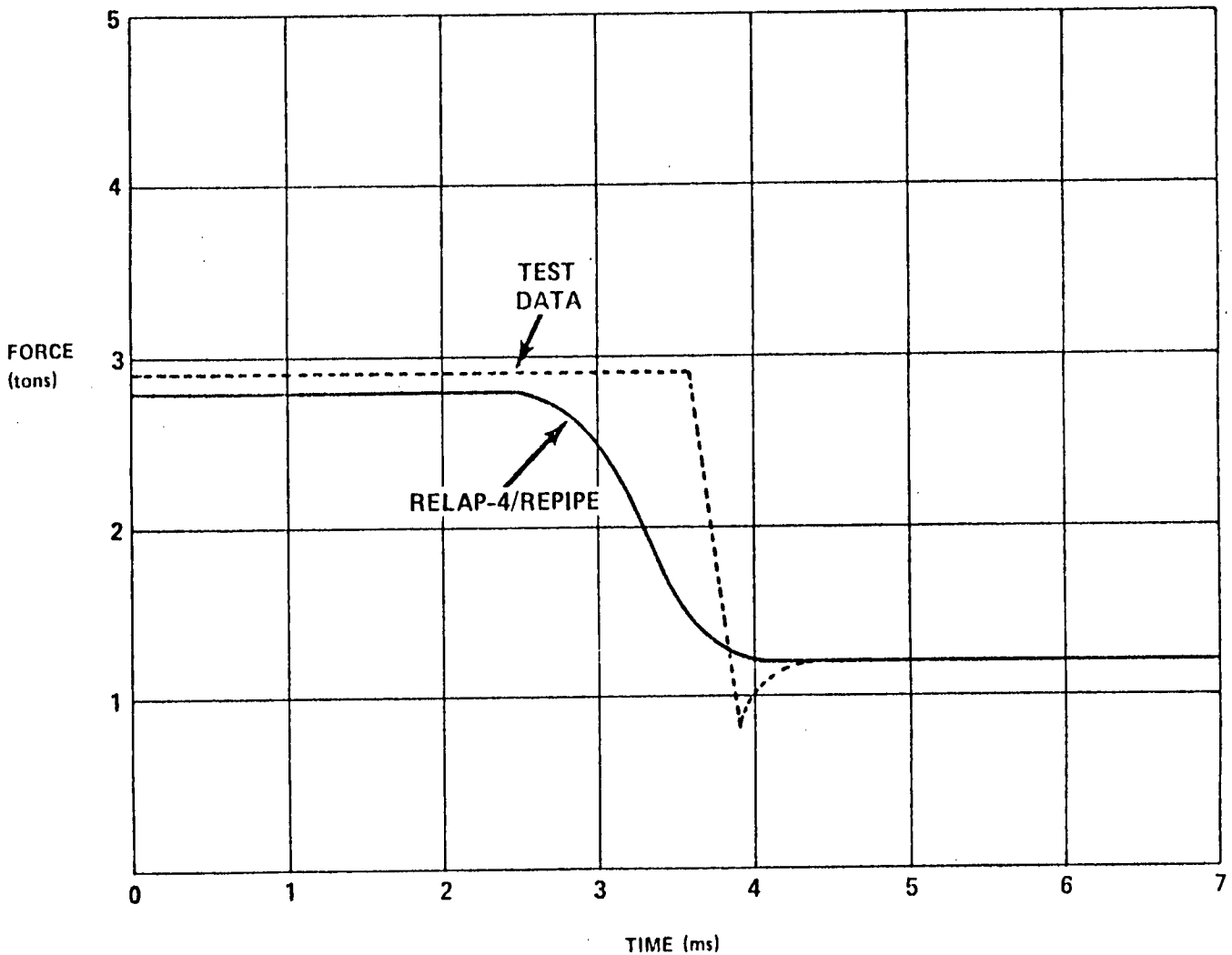

FIGURE B-6
REPIPE PREDICTIONS OF EDWARDS AND O'BRIEN EXPERIMENT*

*Taken from Reference B-8

is apparent that the predictions agree fairly well with the data in both magnitude and shape. These results are confirmatory of REPIPE's ability to calculate thrust properly when appropriate flows, pressures, and fluid properties are supplied by RELAP4. Obviously, greater disagreement would be seen if less appropriate RELAP4 modeling was used.

The second experiment examined was the blowdown experiment of Hanson (see Reference B-7). In this test, water at 60°F and 2,175 psia was blowdown from a two-segment pipe (see upper right of Figure B-8 for exact geometry of pipe). The blowdown was indicated by a rupture disk at one end. In the RELAP4 model, the large pipe was broken into eight control volumes and the small pipe into two volumes (see Figure B-7). The RELAP4/REPIPE results are compared to the experimental results in Figure B-8. Also shown are the results of a simplified analytical model derived by Moody (see Reference B-1). It can be seen that the REPIPE results match the experimental results quite well and are a considerable improvement over the simplified analytical model. In obtaining these results, a 0.2 msec break opening time was assumed. This is believed reasonable, but the sensitivity of the results to this assumption was not examined.

The final comparison of REPIPE to known results was made with a problem solved analytically by Lahey and Moody (see Reference B-2). The configuration considered (shown in Figure B-9) consisted of a large volume connected to a long pipeline. The pipeline is 160 feet long with segments of 64, 32, and 64 feet in length and with a flow area of 100 in^2. Initially, the system is full of saturated steam at 1,000 psia. The force time behavior was estimated on the three segments for an instantaneous rupture at the end of the pipeline.

A RELAP4 model of 21 volumes was used (see Figure B-10). However, it was assumed that the pipe was straight and at the same elevation because exact bend angles were not specified by Moody. This assumption is justified since Moody's analytical approach was also one-dimensional.

REPIPE was run to calculate the wave force on segments two and three and the sum of wave force plus blowdown force on segment one. The results of the initial computations showed lower forces on leg 2 than expected.

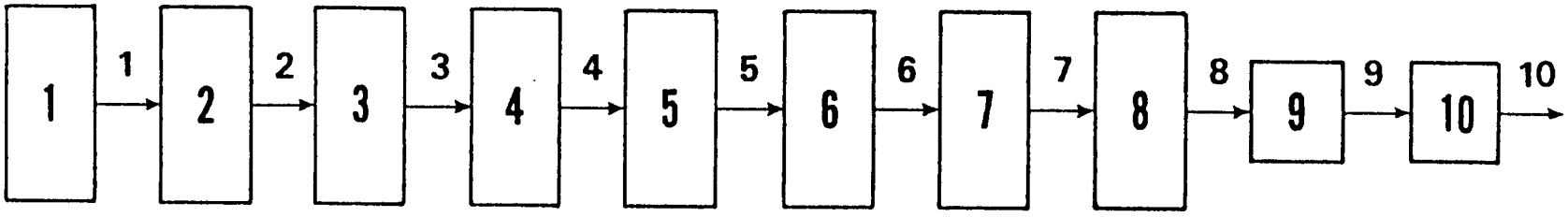

GEOMETRY DATA

8 EQUAL VOLUME

AREA = 0.0294 FT^2

DIAMETER = 0.193477 FT

LENGTH = 1.04166 FT

VOLUME = 0.030625 FT^3

2 EQUAL VOLUME

AREA = 0.0066 FT^2

DIAMETER = 0.09107 FT

LENGTH = 2.25 FT

VOLUME = 0.01485 FT^3

INITIAL CONDITION: P = 2175.0 PSIA
T = $60^{o}0$ F (SUBCOOLED)

FIGURE B-7
RELAP/REPIPE MODELING OF HANSON EXPERIMENT*

*Taken from Reference 8

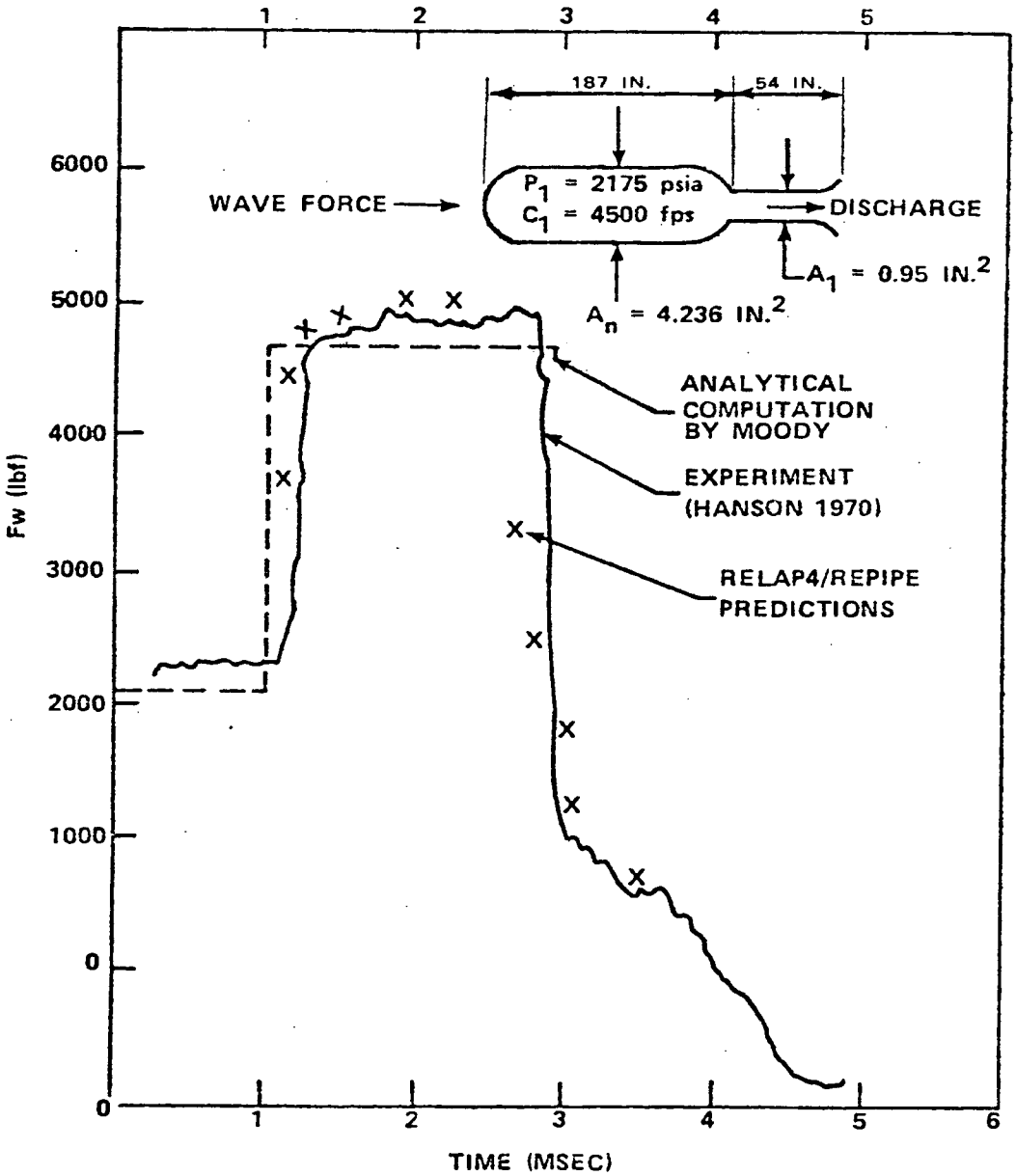

FIGURE B-8
COMPARISON OF PREDICTIONS
AND HANSON'S OBSERVATIONS*

*Extracted from Reference B-2

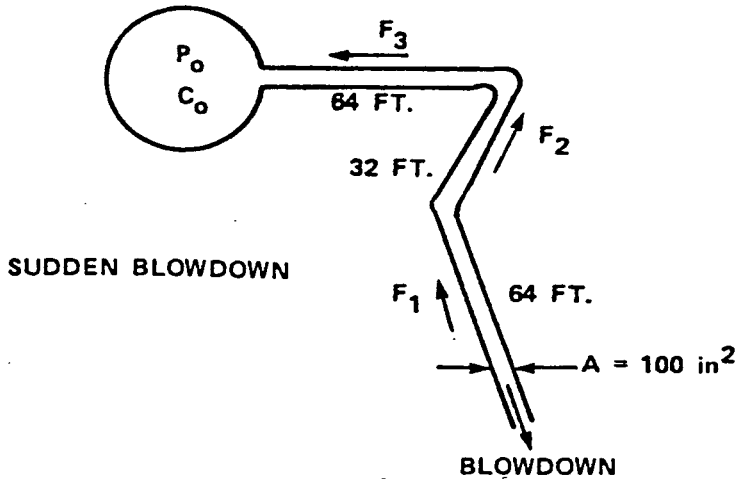

FIGURE B-9
CONFIGURATION USED FOR MOODY
AND LAHEY SAMPLE PROBLEM*

*Extracted from Reference B-2

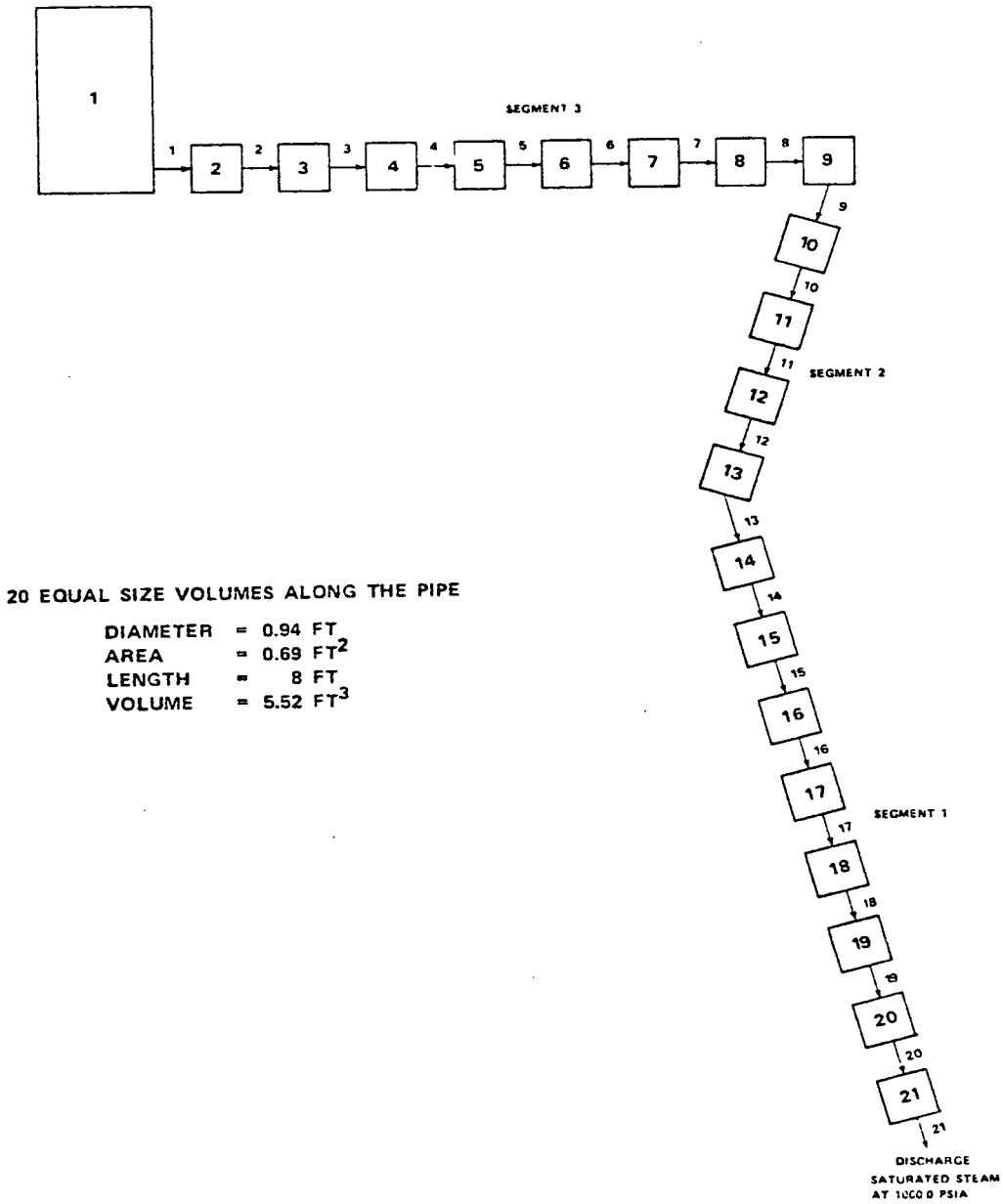

FIGURE B-10
RELAP MODEL FROM MOODY AND LAHEY PROBLEM*

*Taken from Reference B-8

Examination of the RELAP4 output indicated that the high friction in the line lead to a situation where both steam and water were present. Since Moody's analysis assumed all steam and frictionless flow, a large D_e was assigned to the line to keep friction low. When this was done the two-phase situation was avoided, and the results shown in Figure B-11 were obtained.

From comparison of the REPIPE calculations with Moody and Lahey's results, shown in Figure B-11, it may be seen that the wave forces on leg 2 and leg 3 agree very well with the analytical solution in shape and magnitude. The wave force in segment 1 is slightly low in the latter part of the transient, but otherwise the agreement is very good. Based on the results obtained previously with the Edwards and O'Brien problem (see Reference B-5), it seems likely that this slight underestimation is due to the inability of the compression pulse to penetrate the control volume discharging to the atmosphere. In an attempt to avoid this situation, the last control volume was replace by a T-branch and the problem rerun. The results, also shown on Figure B-11, indicate no significant improvement.

Although there is a slight underestimation of the force on segment 1 in the latter part of the transient, the overall agreement is quite good. The good agreement obtained in the sample problems indicates REPIPE to be correctly formulated and programmed.

B.4 ABILITY OF RELAP4/REPIPE TO MODEL TRANSIENTS OF INDUSTRIAL INTEREST

To examine the behavior of RELAP4/REPIPE under conditions similar to those under which it must be used commercially, more complex transients were examined; viz.: two-phase blowdown accross a relief valve and valve closure in a piping system containing a two-phase fluid.

B.4.1 Two-Phase Blowdown

Figure B-12 shows the schematics of the system used for this example. The system consists of a reservoir connected to a long pipe which discharges to the atmosphere. The reservoir is initially separated from most of the piping by a closed valve located 20 feet from the reservoir. The reservoir initially contains a two-phase mixture of steam and water at a pressure of 200 psia and a quality of 0.92. The piping downstream of the valve is assumed to contain saturated steam at 5 psia. The atmosphere is also assumed to be at 5 psia.

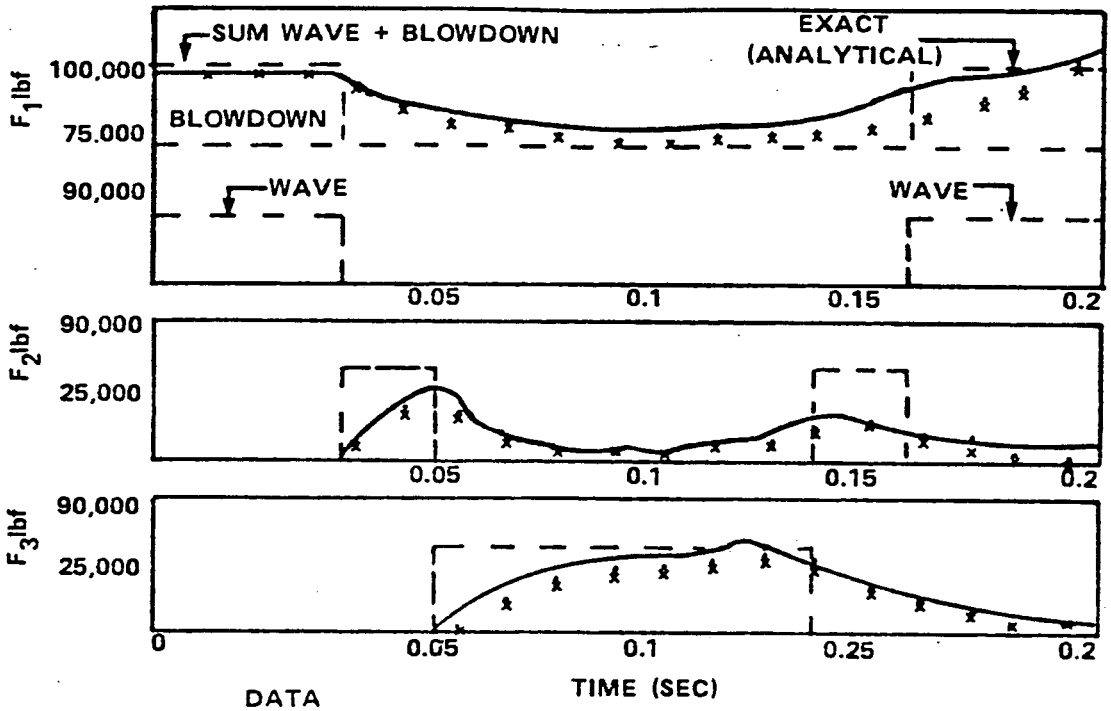

DATA

. . . : RELAP4 RESULTS WITH EQUIVALENT DIAMETER 1.0 E10

x x x: RELAP4 RESULTS WITH EQUIVALENT DIAMETER 1.0E10, WITH T-BRANCH

——: ANALYTICAL DATA

FIGURE B-11
COMPARISON OF ANALYTICAL SOLUTION AND RELAP4/REPIPE RESULTS FOR LAHEY-MOODY PROBLEM*

*Extracted from Reference B-2

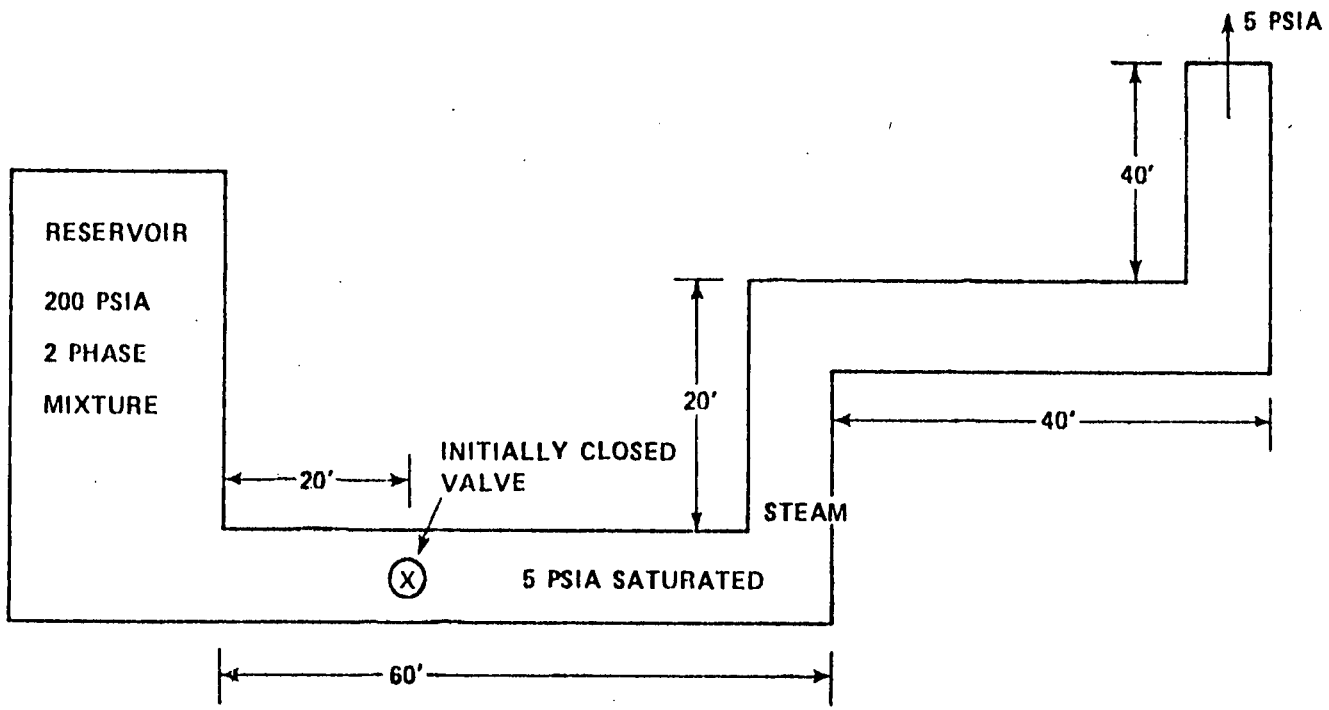

ALL PIPES WITH DIAMETER = 1.667 FT (1-2/3 FT)
VALVE AND RUPTURE END OF PIPE FULLY OPEN AT 0.05 SEC.

FIGURE B-12
SYSTEM USED FOR BLOWDOWN PROBLEM*

*Taken from Reference B-8

The piping is taken to be closed off initially by a rupture disk. Both valve and disk are taken to begin opening at the start of the transient (0.0 second), and they are fully open at 0.05 second. The high pressure differential causes a rapid blowdown and significant forces on the piping segments.

Figure B-13 shows the modeling used for the RELAP4 simulation of the system. Eight volumes were used for the piping and a single volume for the reservoir. The relative velocity between vapor and liquid in the reservoir was taken as 3 ft/sec (obtained by setting bubble rise velocity input at 3 ft/sec). Homogeneous flow is assumed in the piping.

As expected, high wave forces are seen as the fluid accelerates rapidly in the early portion of the transient. This is illustrated by the plots of the time variation in wave force on segments 1 and 2, shown in Figures B-14 and B-15. The forces shortly go to zero on these segments once the fluid has been accelerated. On the last segment, segment 4 (see Figure B-16), the loading force remains high due to the blowdown component. Note that in Figures B-14 through B-16 the reaction forces are plotted and hence the negative signs.

B.4.2 Valve Closing Example

Rapid valve closure in two-phase systems can produce substantial forces on a piping system. To examine RELAP/REPIPE's ability to treat such a situation, the configuration shown in Figure B-17 was used.

The system used differs from that used for the previous problem only in the addition of a second reservoir at the end of the piping and changing the valve location. Again the system is initially assumed to contain a steam-water mixture at a quality of 0.92 with a pressure gradient so that, prior to the transient, fluid is flowing at the rate of 595.0 lb_m/sec from reservoir 1 to reservoir 2. The valve at the entrance to reservoir 2 is assumed to close instantaneously at 10^{-5} seconds after the transient begins.

The RELAP4 noding (see Figure B-18) used for this problem used two volumes for each of the reservoirs and six volumes for the piping (total of eight volumes). The reservoirs were modeled as time dependent volumes which allowed conditions to be maintained constant in the reservoirs through-

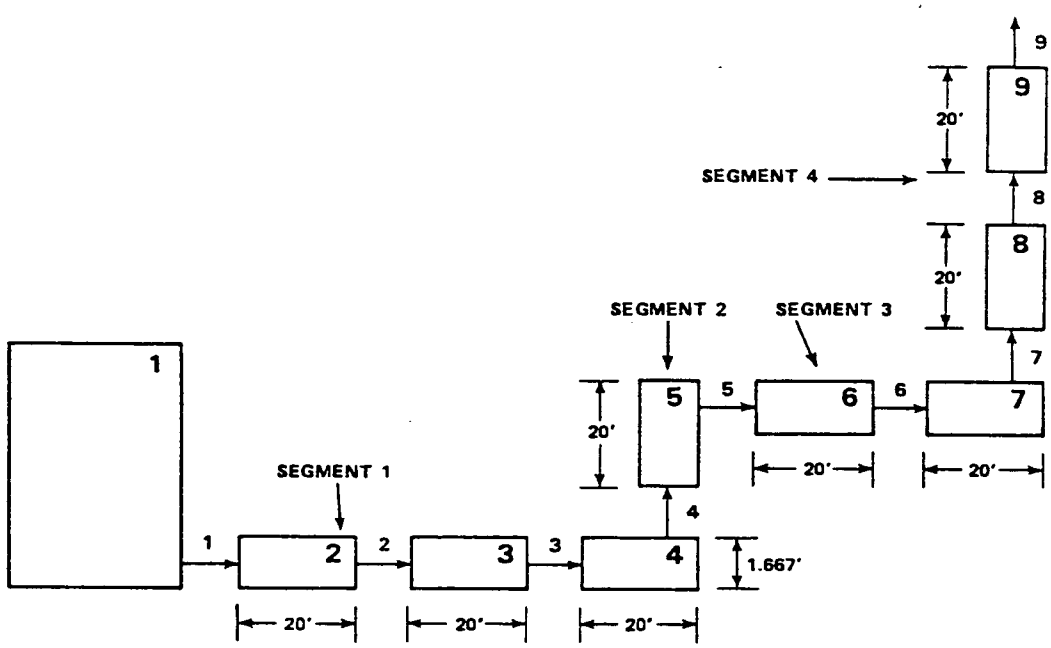

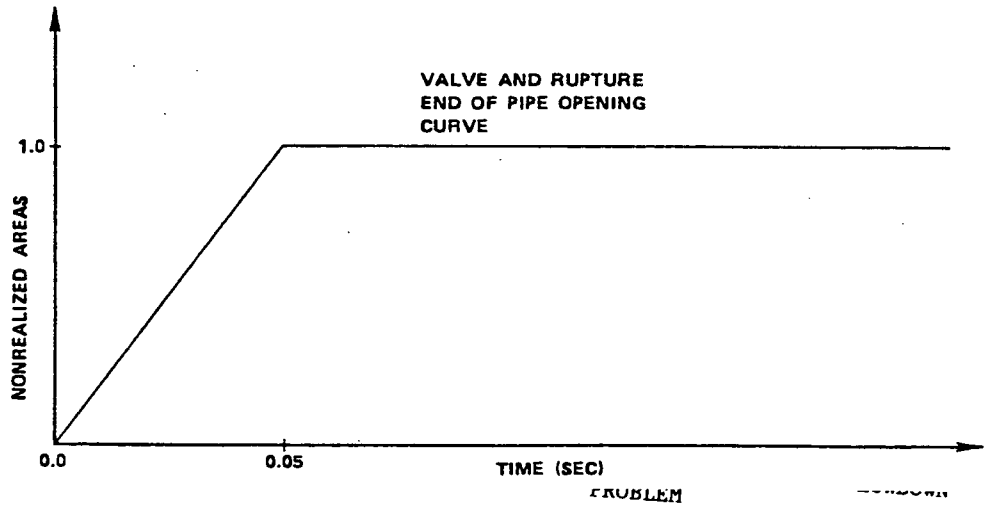

FIGURE B-13
RELAP MODELING FOR BLOWDOWN PROBLEM

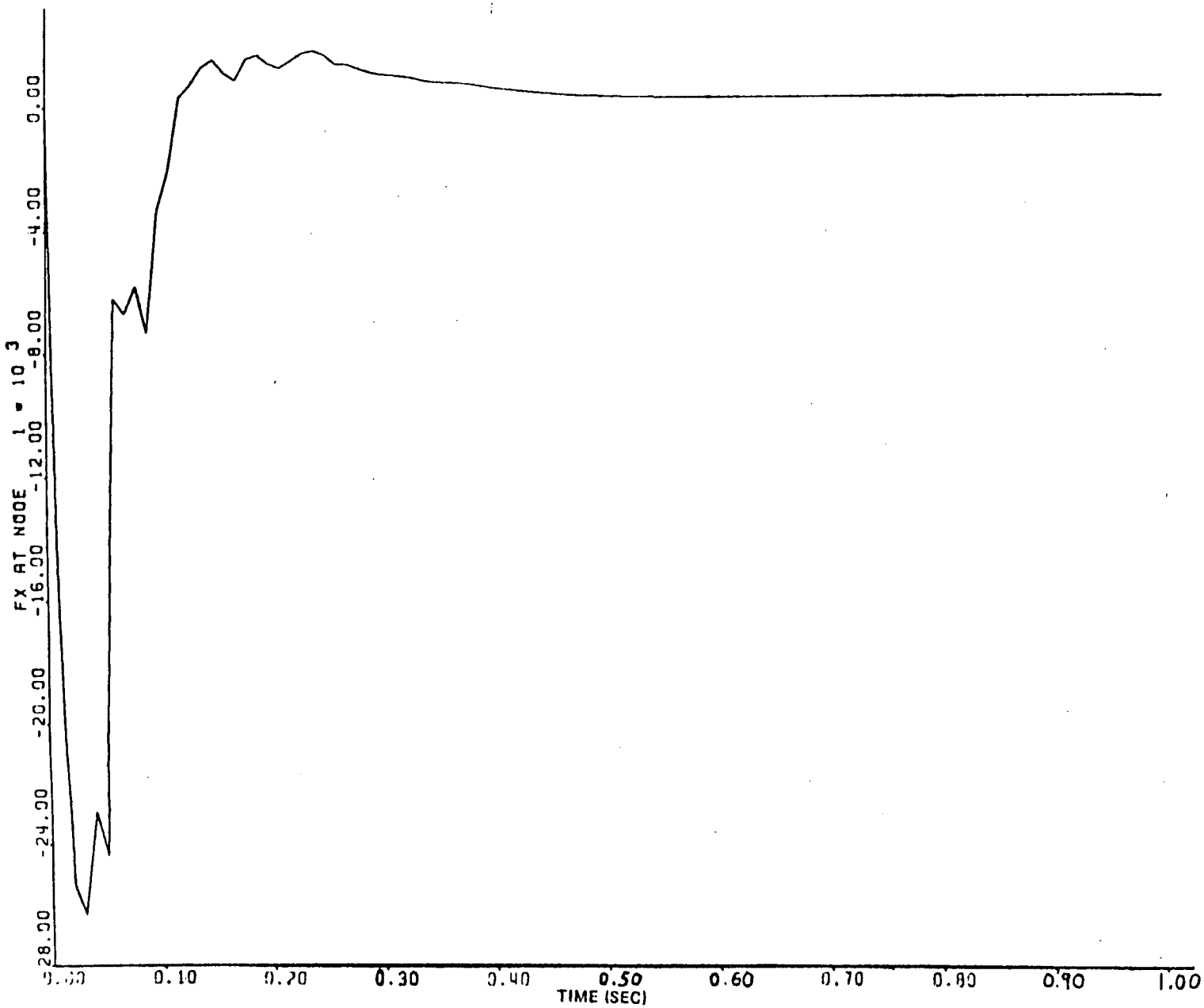

FIGURE B-14
WAVE FORCES ON SEGMENT 1 DURING BLOWDOWN*

*Taken from Reference B-8

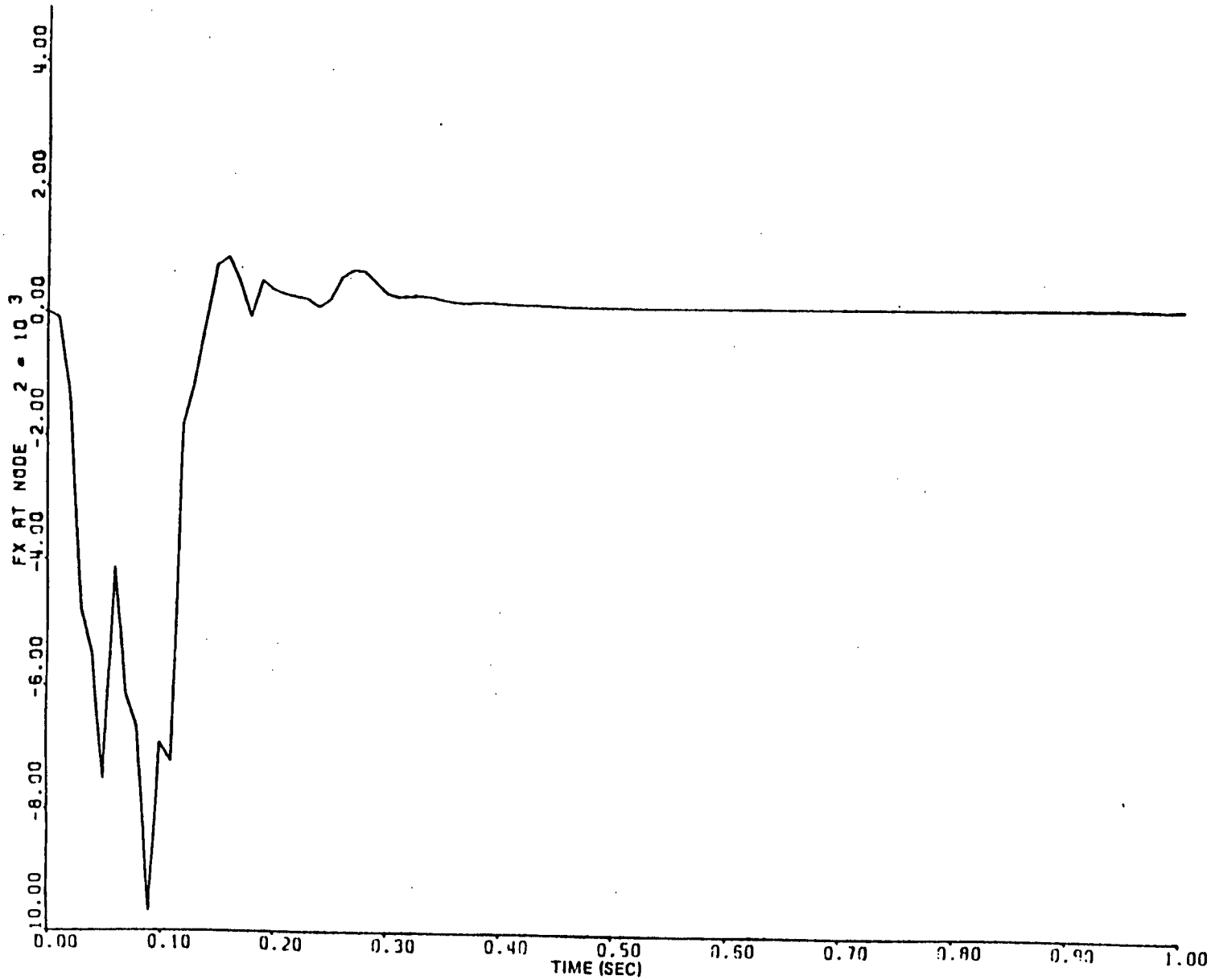

FIGURE B-15
WAVE FORCES ON SEGMENT 2 DURING BLOWDOWN*

*Taken from Reference B-8

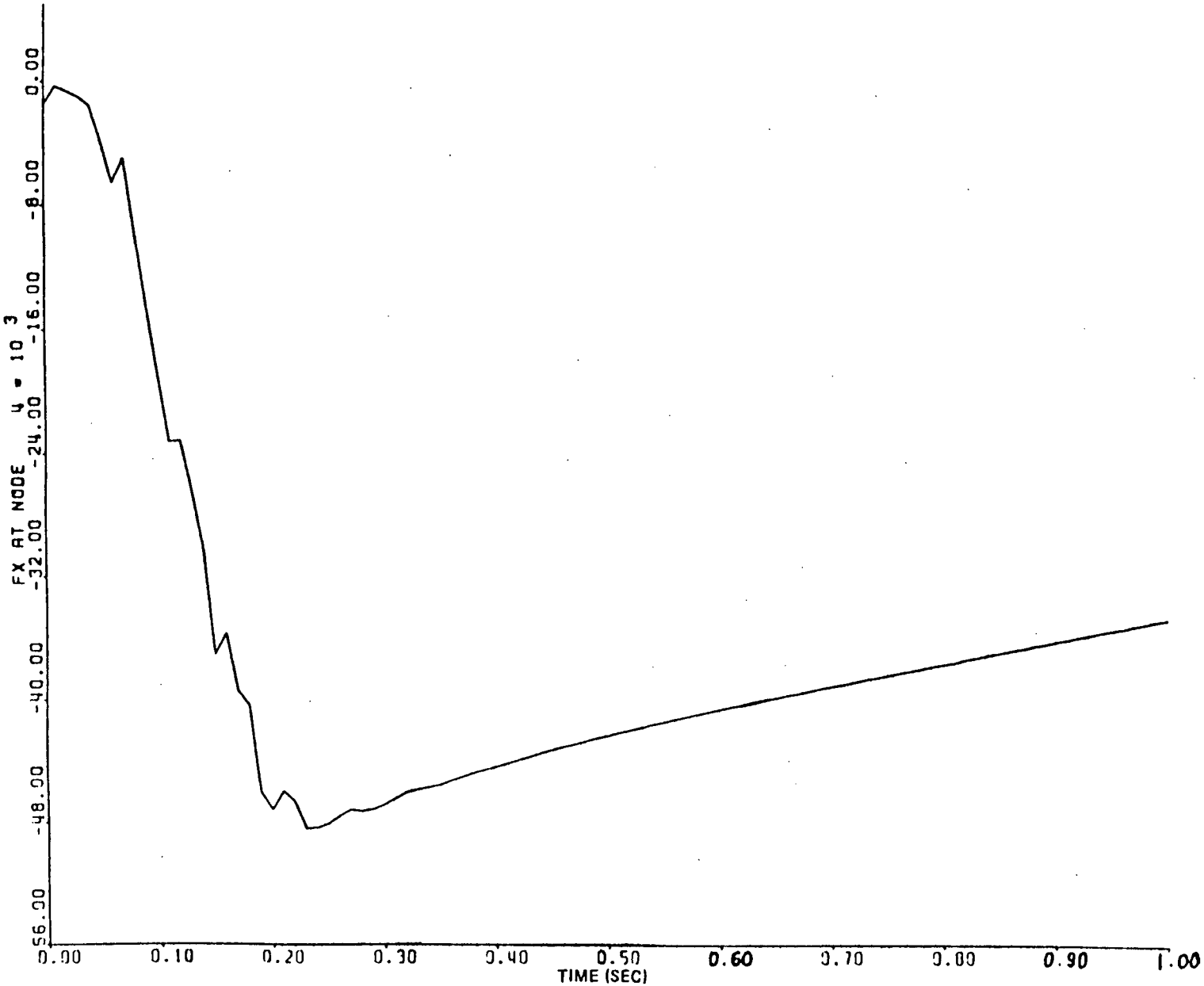

FIGURE B-16
WAVE AND BLOWDOWN FORCES ON SEGMENT 4*

*Taken from Reference B-8

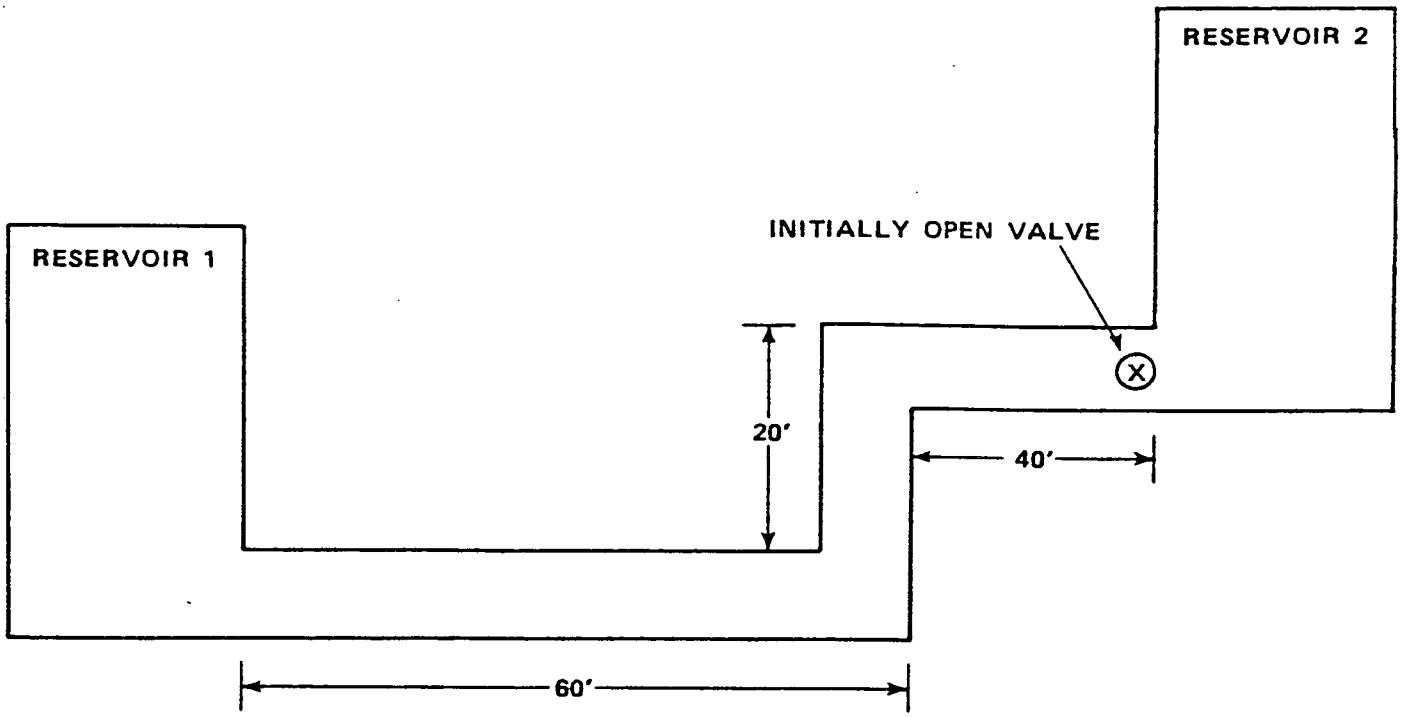

FIGURE B-17
SYSTEM USED FOR VALVE
CLOSURE PROBLEM*

*Taken from Reference B-8

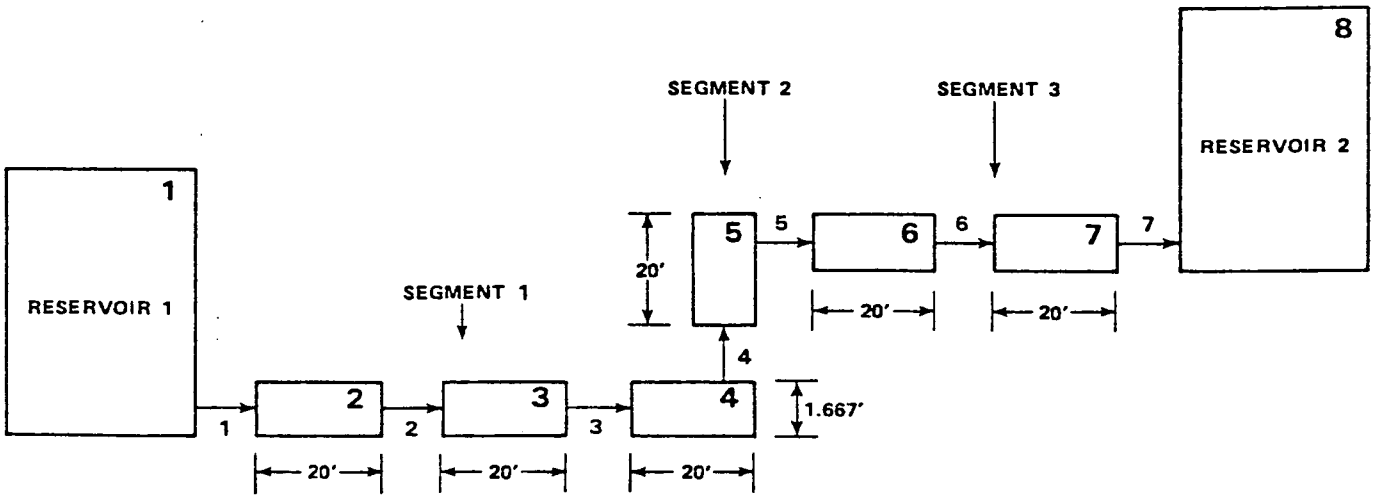

FIGURE B-18
RELAP MODELING OF VALVE
CLOSURE PROBLEM*

* Taken from Reference B-8

out the problem. The initial pressure distribution in the reservoirs and piping is shown in the table below.

PRESSURE DISTRIBUTION OF TEST CASE 2

Volume	Pressure psia
1	200.0
2	169.0
3	165.0
4	162.0
5	163.0
6	142.0
7	137.0
8	133.0

The time variation in loading in the second piping segment is shown in Figure B-19 and is of the form expected. The oscillatory forces seen are the result of the pressure pulses being reflected through the system. The forces are gradually damped by the usual dissipative mechanisms as the transient continues.

As shown in Subsection B.4, the RELAP/REPIPE package operated well when used for prediction of system behavior during blowdown across a relief valve and after rapid valve closure in simple piping configurations containing water-steam mixtures. Reference B-9 also presents evaluations using RELAP4/REPIPE in predicting piping forces.

B.5 ABILITY OF RELAP5/REPIPE TO MODEL SAFETY VALVE TRANSIENT

The ability of REPIPE in conjunction with RELAP4 has been demonstrated in the previous subsections. The ability of REPIPE in conjunction with RELAP5 to predict results from the Combustion Engineering test facility is shown in Section 6.0 of this report. With these comparisons it can be concluded that REPIPE is a viable post-processor of thermal-hydraulic calculations from either RELAP4 or RELAP5.

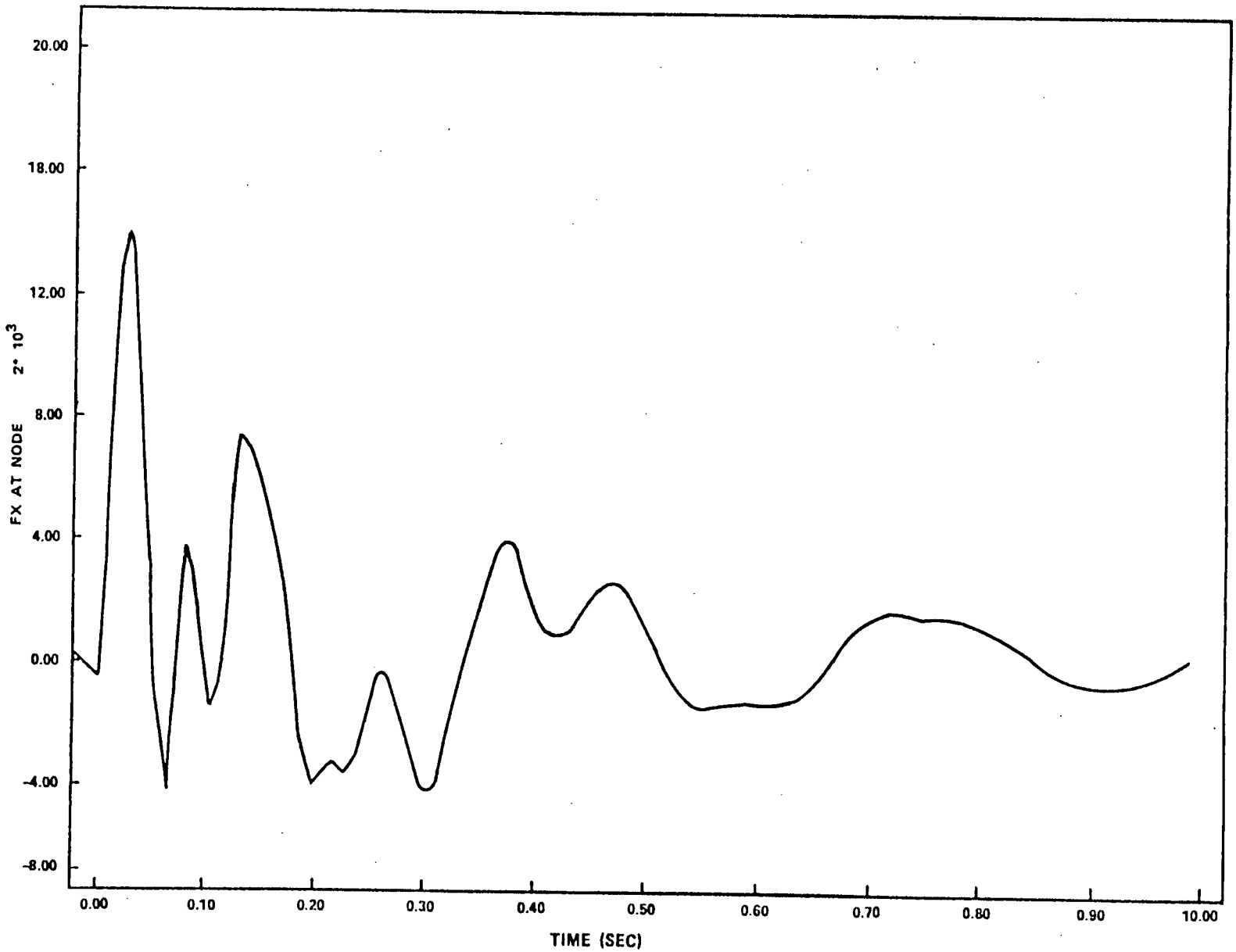

FIGURE B-19
LOADING OF SEGMENT 2 DURING TRANSIENT FOLLOWING VALVE CLOSURE*

*Taken from Reference B-8

B.6 REFERENCES

(B-1) F. J. Moody, "Time Dependent Pipe Forces Caused by Blowdown and Flow Stoppage," ASME Paper 73-FL-23 (1973).

(B-2) R. T. Lahey, Jr. and F. J. Moody, Thermal Hydraulics of a Boiling Water Reactor, p. 375, ANS, La Grange Park, Illinois (1977).

(B-3) Control Data Corp., "User's Manual for REPIPE" (1978).

(B-4) Victor H. Ransom, et. al., "RELAP5/MOD1 Code Manual," Vol. 1-2, EG&G, Idaho, Inc. NUREG/CR-1826 Revision 2, (September 1981).

(B-5) A. R. Edwards and T. P. O'Brien, "Studies of Phenomena Connected with Depressurization of Water Reactors," J. British Nuc. Energy Soc. 9, 125 (1970).

(B-6) G. R. Sawtelle, et al, "Comparison of RELAP4 Predictions with Standard Problems 1, 2, and 3," Electric Power Research Institute Report EPRI NP-205 (1976).

(B-7) G. H. Hanson, "Subcooled Blowdown Forces on Reactor System Components, Calculational Method and Experimental Conformation," Idaho Nuclear Corp. Report 1N-1354 (1970).

(B-8) "Evaluation of the RELAP4/REPIPE System for Calculation of Transient Piping Forces on Systems Containing Water and Steam," Control Data Corporation, (July 1978).

(B-9) Ming-Teh Hsu, et. al., "An Evaluation of Time-Dependent Loading Analysis on a Piping Network Using RELAP4/REPIPE," Nuclear Technology, Vol. 53 (April 1981).

APPENDIX C

TAC2D PROGRAM DESCRIPTION

APPENDIX C
TAC2D PROGRAM DESCRIPTION

C.1 GENERAL DESCRIPTION

TAC2D is a code for calculating steady-state and transient temperatures in two-dimensional problems by the finite difference method. It is written entirely in Fortran V. The configuration of the body to be analyzed is described in the rectangular, cylindrical, or circular (polar) coordinate system by orthogonal lines of constant coordinate called grid lines. The grid lines specify an array of nodal elements. Nodal points are defined as lying midway between the bounding grid lines of these elements. A finite difference equation is formulated for each nodal point in terms of its capacitance, heat generation, and heat flow paths to neighboring nodal points. A system of these equations is solved by an implicit method. More concerning the numerical technique is presented in Reference C-2.

Some advantages of the code are as follows.

(1) The geometrical input is simple.

(2) The input of thermal parameters is by Fortran V arithmetic statement functions. Many of the calculation variables (time, local temperature, local position, etc.) are available for use in these functions.

(3) Internal and external flowing coolants may be used.

(4) There may be internal and external thermal radiation.

(5) There is a wide selection of optional output.

The principal limitations of the code are as follows.

(1) The grid line system must be orthogonal in the rectangular, cylindrical, or circular coordinate system. Therefore, the sides of the nodal elements must also be orthogonal. The entire problem must be bounded by four grid lines in one of the coordinate systems. Difficulties in treating irregular boundaries can be overcome to some extent through the use of materials having specially chosen properties.

(2) All radiation is treated one-dimensionally.

(3) There are no provisions for thermal expansion or change of phase. Such special heat transfer situations could be included by extensions of the existing programming.

TAC2D has been assigned operational status. The machine requirement is a 65K Univac 1108, or equivalent. In addition to input-output, a maximum of four and a minimum of no tapes are required depending upon the code options being used.

C.2 BASIC CODE STRUCTURE

The digital computer code TAC2D* was developed at Gulf General Atomic for obtaining temperature solutions in the wide variety of two-dimensional thermal systems which are encountered in the field of nuclear engineering. Code calculations are governed by the heat conduction equation:

$$\nabla \cdot k\nabla T + q''' = \frac{\partial}{\partial t} \rho c T$$

where

k = thermal conductivity, Btu/h-ft-F

T = local temperature, F

q''' = volumetric heat generation rate, Btu/h-ft^3

ρ = density, lb/ft^3

c = specific heat, Btu/lb-F, and

t = time, h.

This equation is replaced by an equivalent set of linear finite difference equations, which is solved for the local temperatures at given points in time by the implicit numerical method given in Reference C-1. Steady-state results are found by extending a transient calculation to the limit where thermal equilibrium is attained. An option is available for performing this pseudo-transient calculation as efficiently as possible. If it is used, specific heats and time increments are determined as a part of the calculation rather than being given as input. In the finite difference equations, the local value of k may be an effective overall thermal conductivity which includes the effects of convection and/or radiation.

---

*The acronym TAC2D stands for "Thermal Analysis Code - Two-Dimensional."

The problem must be modeled within the geometry envelopes of one of the three coordinate systems shown in Figure C-1. The choice depends upon whether it is best described as a rectangle, a polar rectangle, or a cylinder. The code includes provision for both internal and external coolants. Use of internal coolants is optional but coolants flowing on the four outer surfaces must always be included to describe boundary conditions by assigning appropriate values to the coolant thermal parameters. There is provision for internal thermal radiation but its treatment is one-dimensional.

The purpose of this Appendix is to provide some information to describe TAC2D. The mathematical formulations used and a programmer's description of the code are given in Reference C-2.

TAC2D is actually one of two generalized heat transfer codes which have been developed at Gulf General Atomic.

A code was needed which could be easily used by persons not familiar with computer science. Toward this end, care was taken to keep all input and output within the scope of engineering terminology. Also, a system of input checking and easily interpreted error messages was included. As a final step, the user's manual was prepared to provide a comprehensive guide to code application and input. The result of the above provisions is that TAC2D is a "black box" type of code in which the user should be detached from programming and computer system aspects of the problem solution.

The features most desired in codes such as TAC2D are generality, simplicity of input, and economy of computer time. Generality can usually be increased only by partially sacrificing the latter two features. TAC2D was formulated under the basic philosophy of obtaining a trade-off among all three features which would be an optimum for economical solution of thermal problems typically encountered in the nuclear field.

General purpose heat transfer codes are usually developed in terms of a network of points connected by thermal resistances. In most codes, the arrangement of these points may be purely arbitrary. A high degree of generality is obtained at the expense of input simplicity since an individual set of data must usually be supplied for each point. If, on the other hand, it is chosen to confine the problem within the geometry envelope of

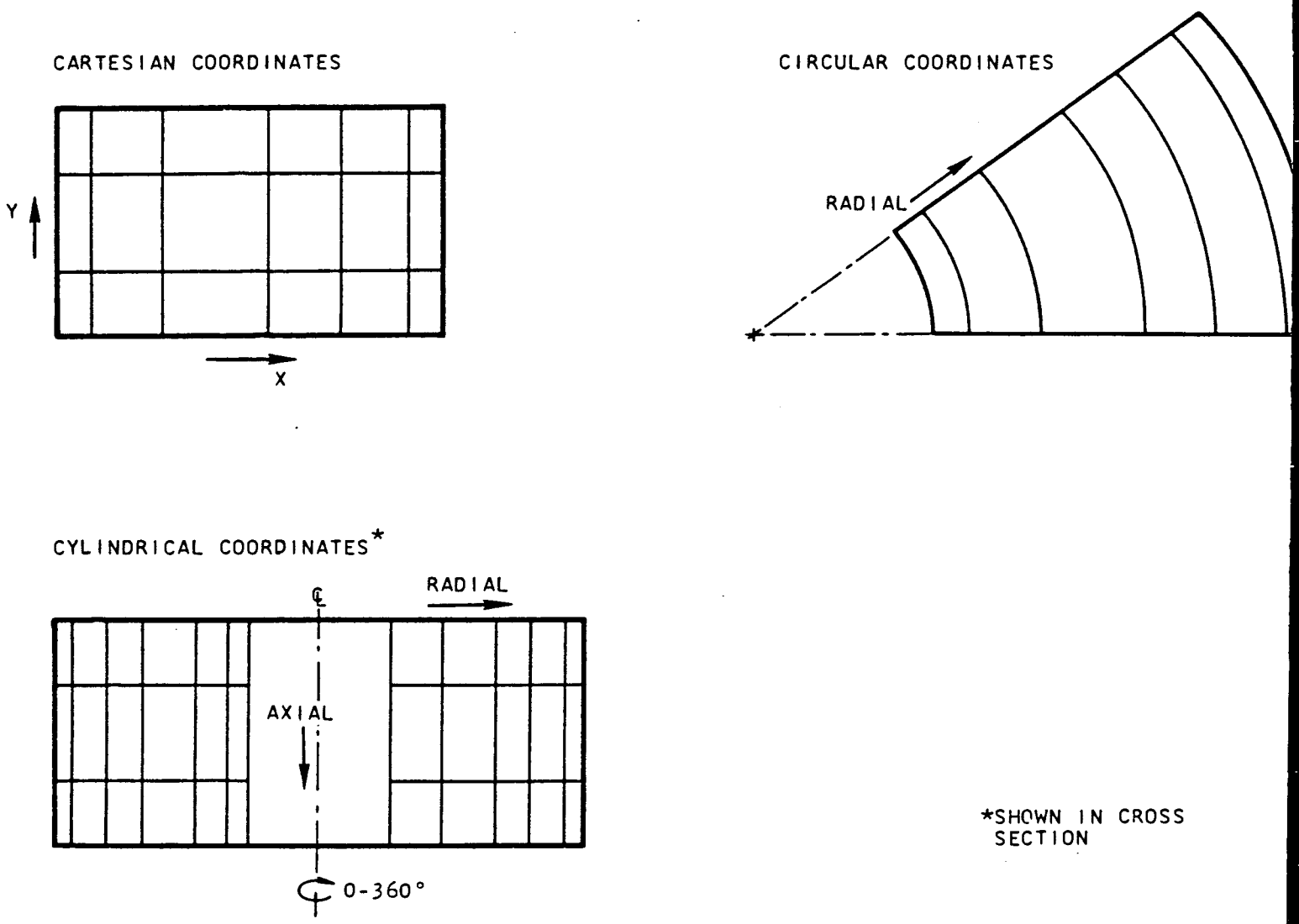

*SHOWN IN CROSS SECTION

FIGURE C-1
COORDINATE SYSTEMS FOR TAC2

one of the three coordinated systems shown in Figure C-1, the input complexity may be greatly reduced. The entire geometry and subdivision can be defined by giving the coordinates of constant coordinate lines, or grid lines, such as those illustrated in the figure. If the points are defined as lying midway between adjacent grid lines, then a region of points can be established by giving the four bounding grid lines of that region. Other input data such as that required to specify the resistances can be given in condensed form by referring to these regions rather than to the individual points which they contain. The above approach was used because experience indicated that a majority of the two-dimensional thermal systems for which temperature calculations were performed could be modeled within one of the geometry envelopes shown in Figure C-1. Furthermore, the computational algorithm applied in the solution for the point temperatures is the most efficient known and could not have been used had complete generality been maintained in the arrangement of the points.

Some of the definitions and instructions which are given in Reference C-2 are presented in terms of Cartesian coordinates (Figure C-1) only. These may be translated to the other two systems by means of the following correspondences.

Circular coordinates

x = radial; y = theta

Cylindrical coordinates

x = radial; y = axial

C.3 VERIFICATION METHOD USED ON TAC2D

TAC2D is operational on Black & Veatch's Univac system and is designated as MO1. Three test cases were run and compared to established results in several forms and from three sources. All results are contained in the MO1 program manual and the MO1 verification binders stored in the Black & Veatch computer group.

Test Case 1 was a right circular cylinder subject to convection and conduction. This was checked against analytical results from Reference C-3 and was found to be in good agreement.

Test Case 2 was a very complex HTGR blower impeller analysis done at Gulf General Atomic who originated TAC2D. The results were checked against the results obtained by Gulf General Atomic and given in the MO1 User's Manual.

Test Case 3 was a rectangular slab subject to conduction and convection with a normal coolant. The results were checked against both analytical results as well as the published results given in the TAC2D Verification Manual published by the Gulf General Atomic (Reference C-4) under the heading of Benchmark Problem 7.

All cases compared satisfactorily within 5 per cent or less of the theoretical or previously calculated results.

C.4 REFERENCES

(C-1) Peaceman, D. W. and Rachford, H. H., "The Numerical Solution of Parabolic and Elliptic Differential Equations," I. Soc. Indust. Appl. Math., Vol. 3, No. 1, pp. 28-41, March 1955.

(C-2) Clark, S. S. and Petersen, J. F., "TAC2D, A General Purpose Two-Dimensional Heat Transfer Computer Code - Mathematical Formulations and Programmer's Guide," USAEC Report GA-9262, Gulf General Atomic, September 1969.

(C-3) Carslaw, H. S. and Jaeger, J. C., Conduction of Heat in Solids, Oxford at the Clarendon Press, p. 227, 1959.

(C-4) Morcos, S. M. and Williams, K. A., "Code Verification and Benchmark Problems," Part C, GA-A13415, June 1975.

APPENDIX D

ADLPIPE PROGRAM DESCRIPTION

APPENDIX D
ADLPIPE PROGRAM DESCRIPTION

D.1 BASIC APPROACH AND DESCRIPTION

ADLPIPE is a piping stress evaluation computer code developed by Arthur D. Little, Inc. This program uses the transfer matrix approach to analyze the flexibility of multiple branch and closed loop piping systems subject to thermal, uniform, and concentrated loadings, both static and dynamic. Dynamic response is obtained by the modal superposition method. All calculations are in accordance with the requirements of ANSI B31.1 Power Piping Code and the ASME Section III Boiler and Pressure Vessel Code.

The piping system may contain translational elastic (spring and solid hangers), torsional elastic (weak spring), and constant effort (loadings) restraints, flexible anchors (gimbals), flexible joints (sleeves), bellows expansion joints, components (valves), internal pressure, insulation and shielding on the system, arbitrary section beams, rigid body elements, and mitered elbows.

The input consists of geometry, physical properties, and loads required. Dynamic loads are input in the form of a response spectra, time history of forces in tabular form or time-dependent forces as polynomial or trigonometric functions. The input of network point coordinates and straight member projections can be plotted.

Output for the structural options consist of the system geometry, forces and moments in the global coordinate system, rotations, translations, and attendant stresses for every element in the piping system. The program has the capability for storing results of various loading conditions on files to be combined in a subsequent run into the equations provided in the codes.

The version of ADLPIPE used for the piping analysis is version D. The analysis was run on the Babcock & Wilcox CDC-7600 computer facility at Lynchburg, Virginia.

D.2 ADLPIPE VERIFICATION

ADLPIPE version D is verified to ANSI B31.1 Power Piping Code and ASME Section III Boiler and Pressure Vessel Code. The program has been verified by Arthur D. Little, Inc with the following checks.

(1) All piping and non-piping members have been checked for correct intensification factors and stress indices application.

(2) The determination of moments, forces, deflections, and rotations has been checked against known results.

(3) All code equation solutions and summaries for ANSI B31.1 and ASME III have been checked.

In addition, Black & Veatch has performed the following verifications of ADLPIPE version D.

(1) The formation of a stiffness matrix and resultant moments and forces were checked and compared to hand generated calculations.

(2) The correct input and usage of enforced displacements were compared to hand generated results.

(3) The thermal deflections in all coordinate directions were compared to hand generated results.

(4) The application of stress intensification factors and code equation stress were verified against ANSI B31.1 criteria.

(5) The dynamic modal summation technique was checked against Nuclear Regulatory Guide 1.92.

(6) The dynamic analysis, including calculation of natural frequencies, mode shapes, modal deflections, and moments, was verified against a public domain computer program.

(7) The dynamic time history and seismic analysis load summary methodology has been checked against hand generated results.

APPENDIX E

EXPERIMENTAL RESULTS FOR CE TEST 908

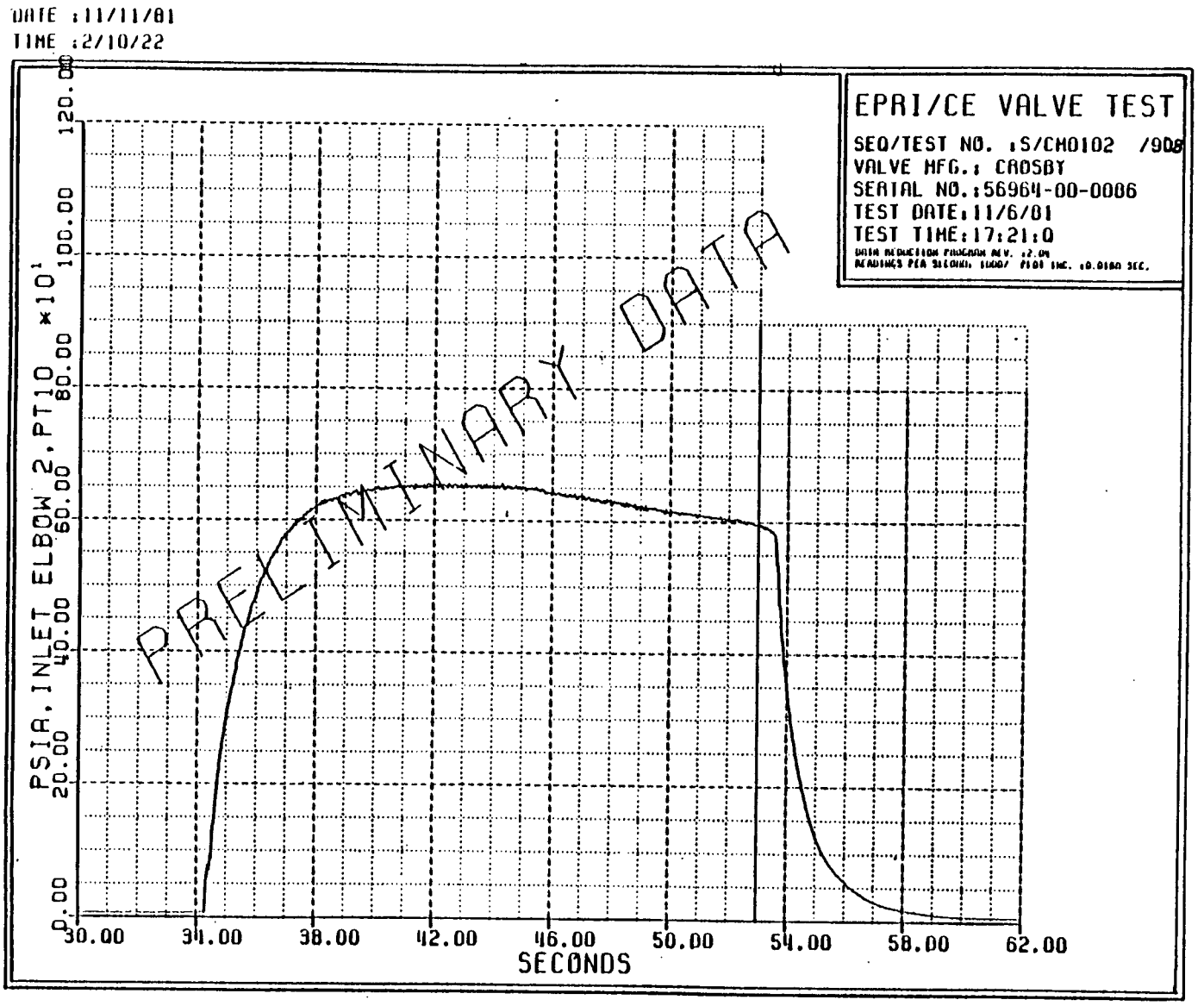

FIGURE E-1
PRESSURE IN VERTICAL DISCHARGE RUN AT PIO, TEST 908*

*Taken from Reference E-1

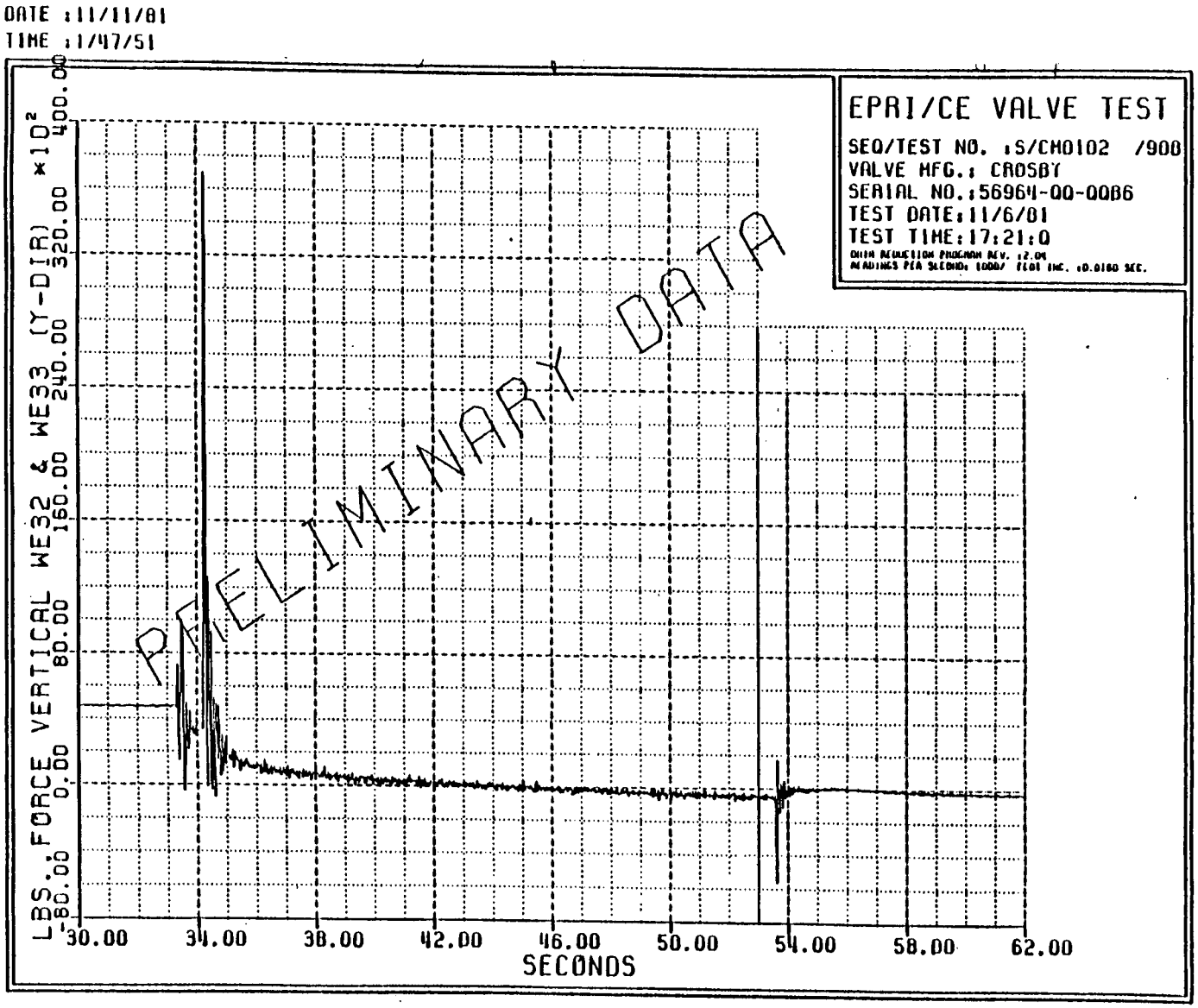

FIGURE E-2
VERTICAL LOAD AT END OF FIRST VERTICAL DISCHARGE PIPE AT W32 AND W33, TEST 908*

*Taken from Reference E-1

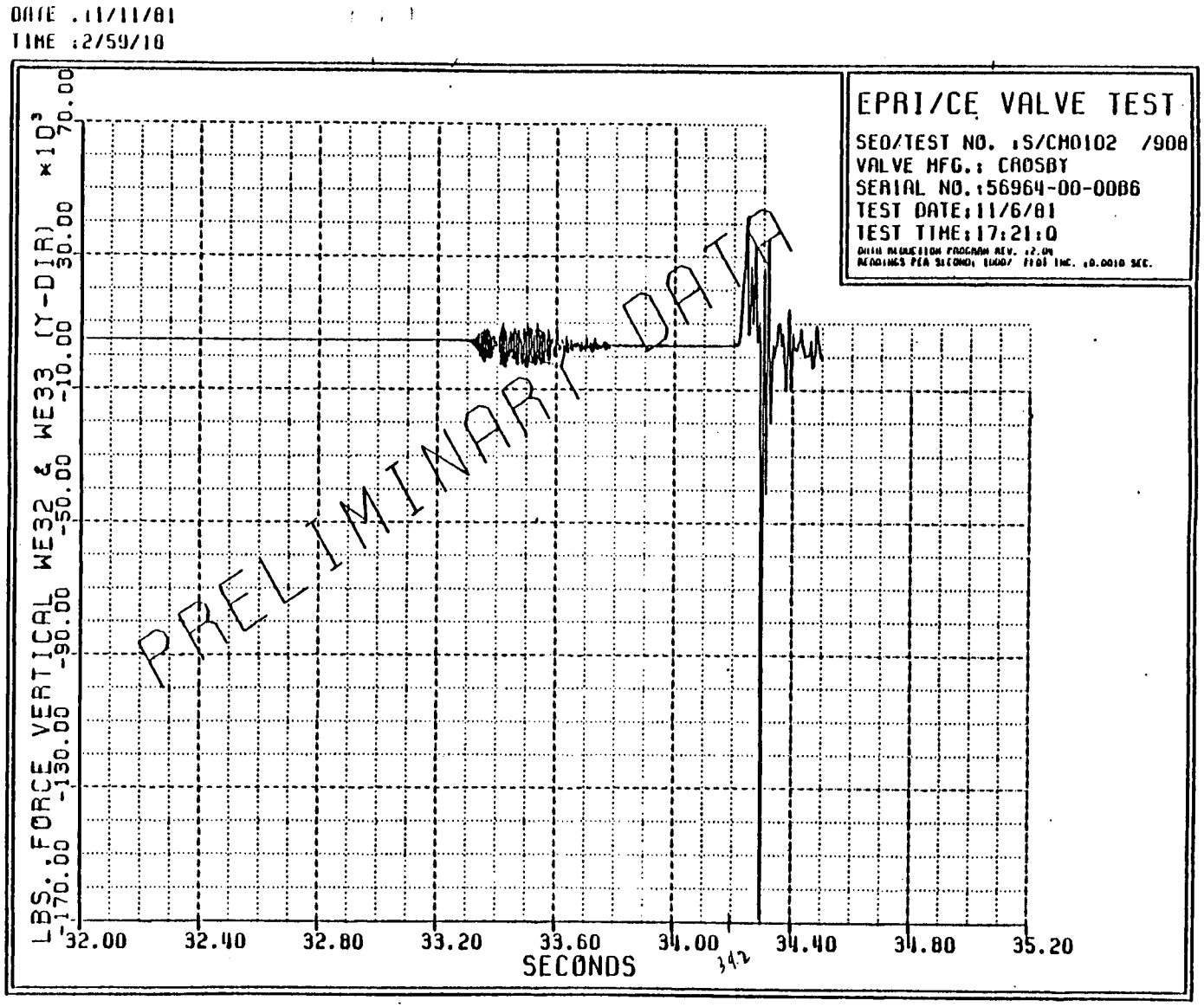

FIGURE E-3
VERTICAL LOAD AT END OF FIRST VERTICAL DISCHARGE PIPE AT W32 AND W33, TEST 908*

*Taken from Reference E-1

DATE :11/23/81
TIME :0/36/42

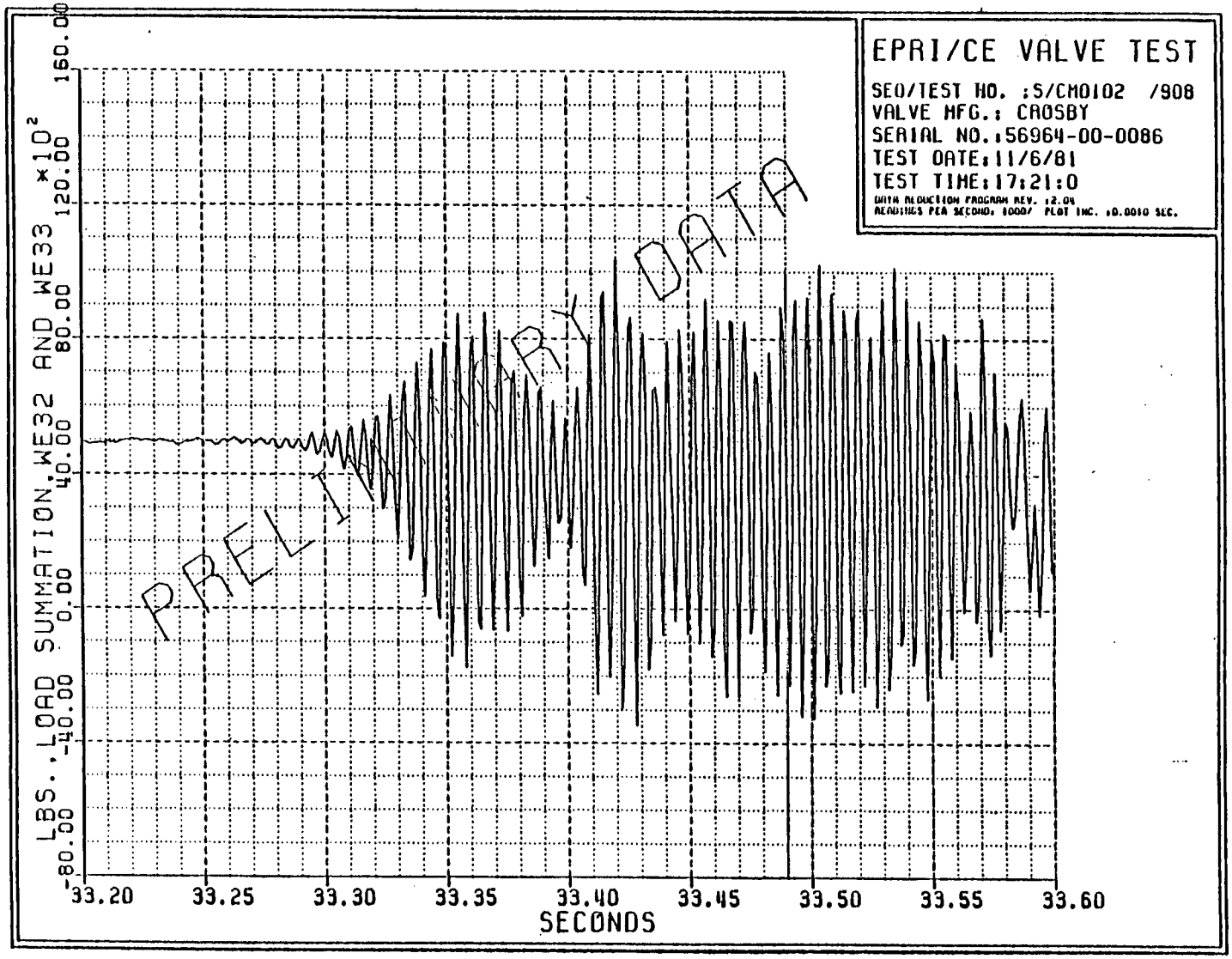

VERTICAL LOAD AT END OF FIRST VERTICAL DISCHARGE PIPE, AT TEST 908

DATE :11/23/81
TIME :0/38/10

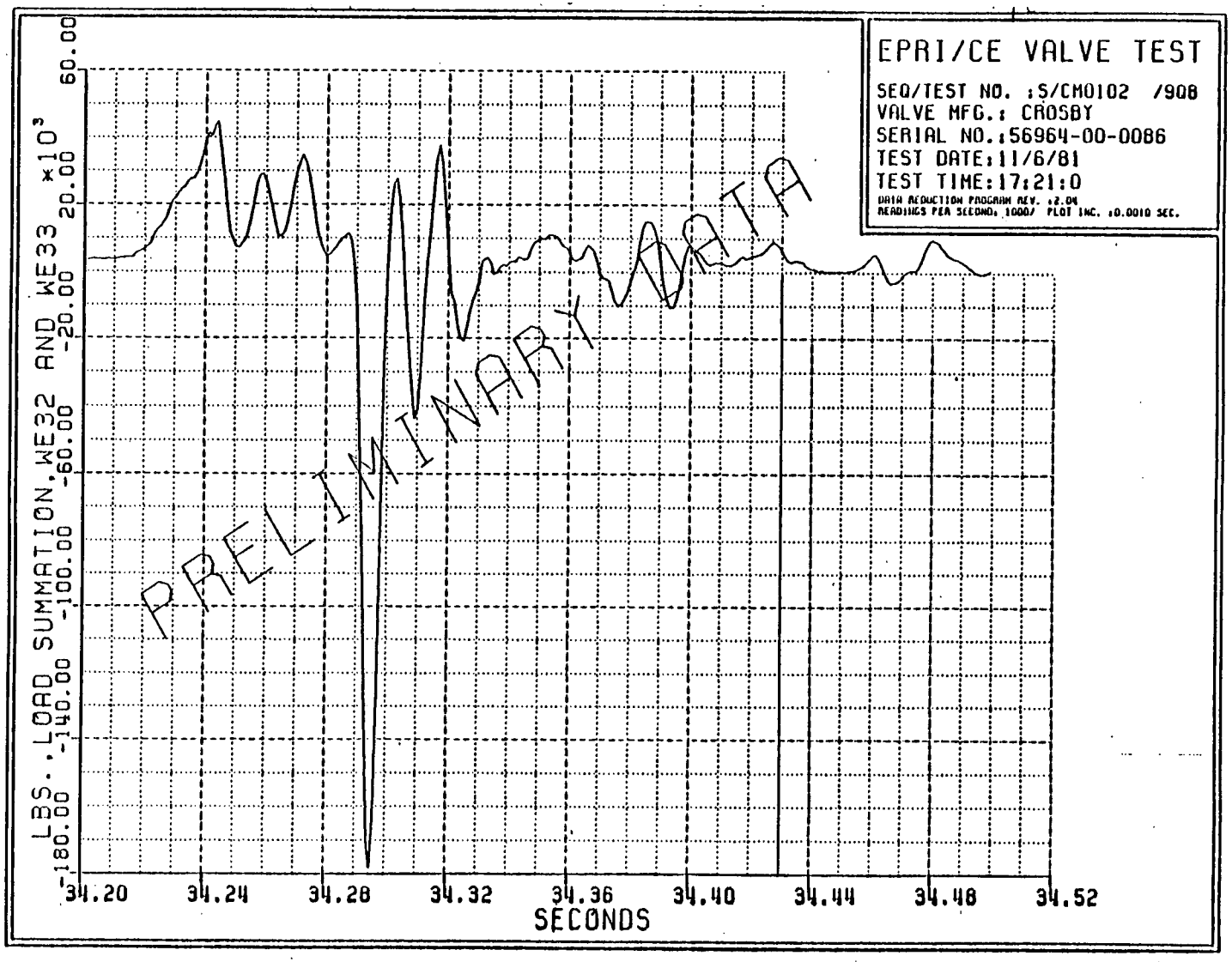

VERTICAL LOAD AT END OF FIRST VERTICAL DISCHARGE PIPE, TEST 908

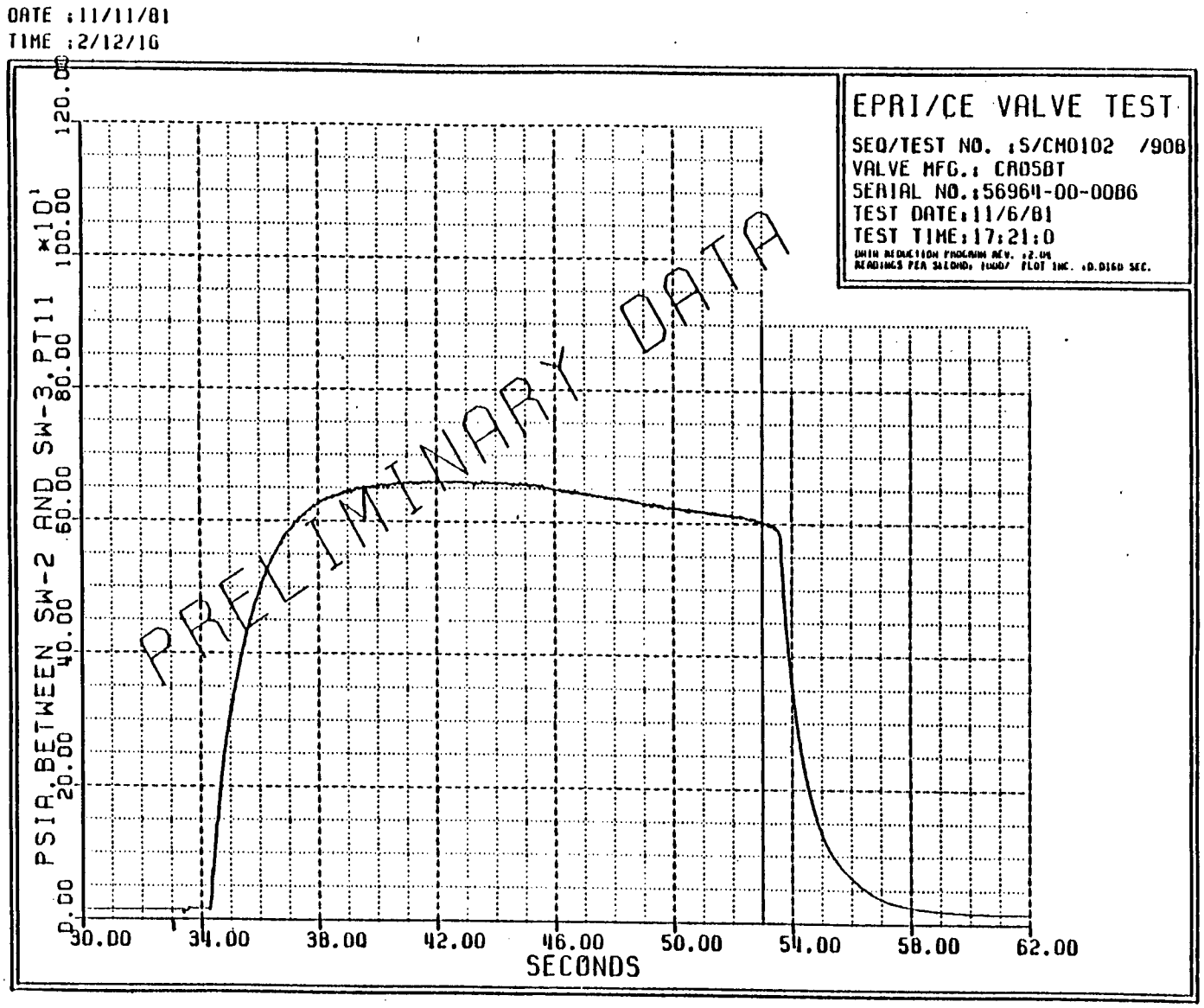

PRESSURE BETWEEN SW-2 AND SW-3, TEST 908

DATE :11/6/81
TIME: 18/10/16

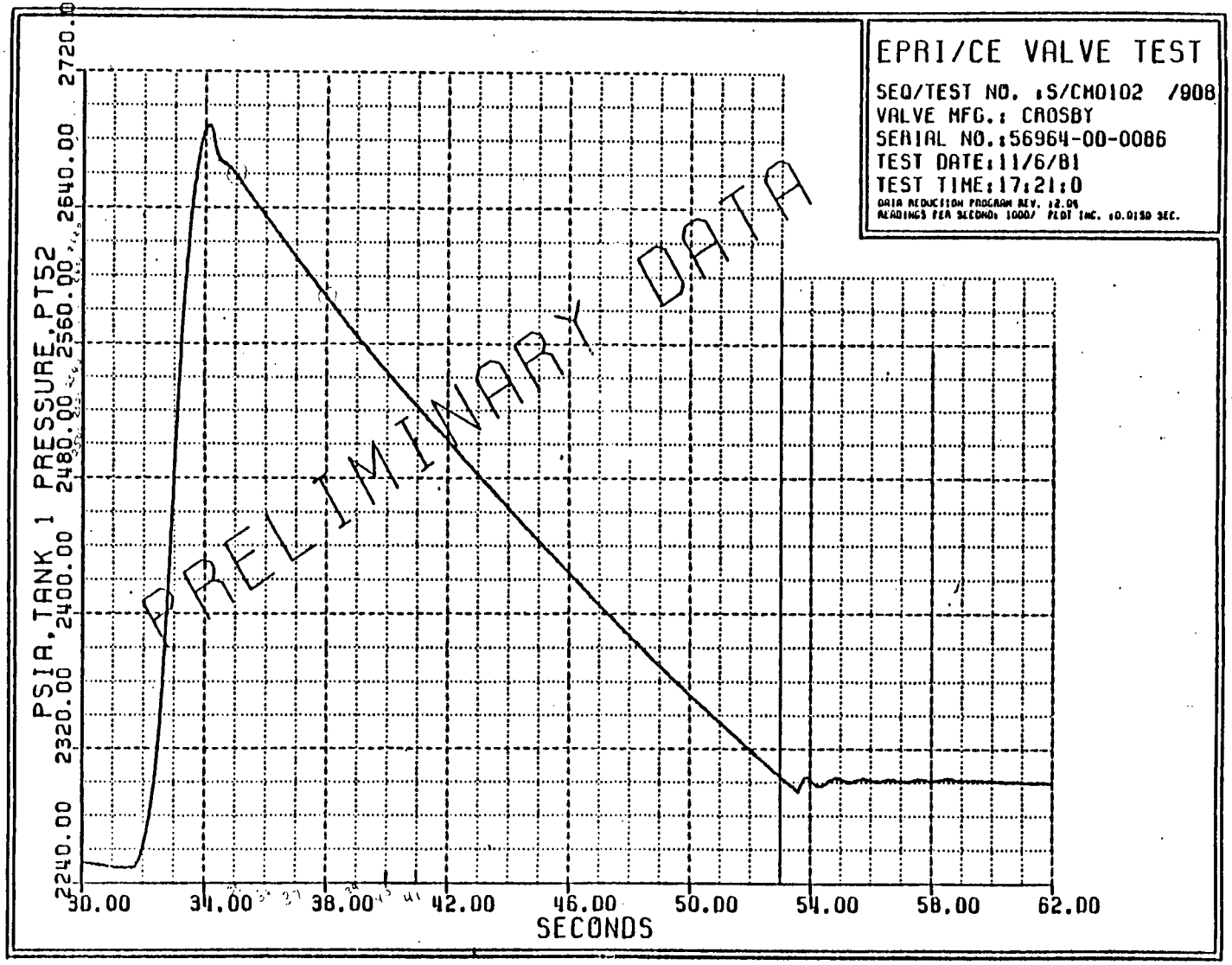

PRESSURE IN DRUM 1, TEST 908

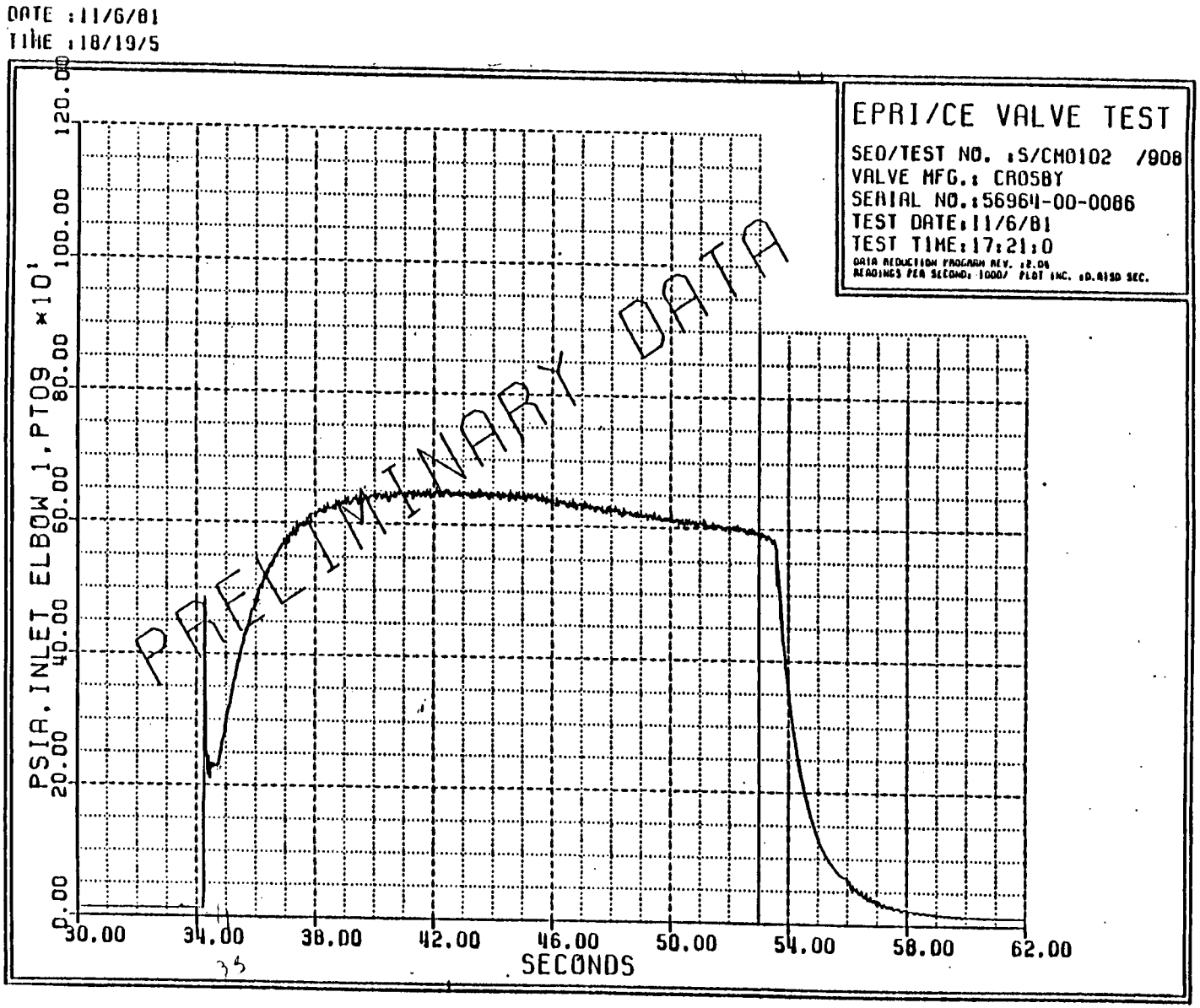

PRESSURE IN FIRST HORIZONTAL RUN DISCHARGE PIPE,
TEST 908

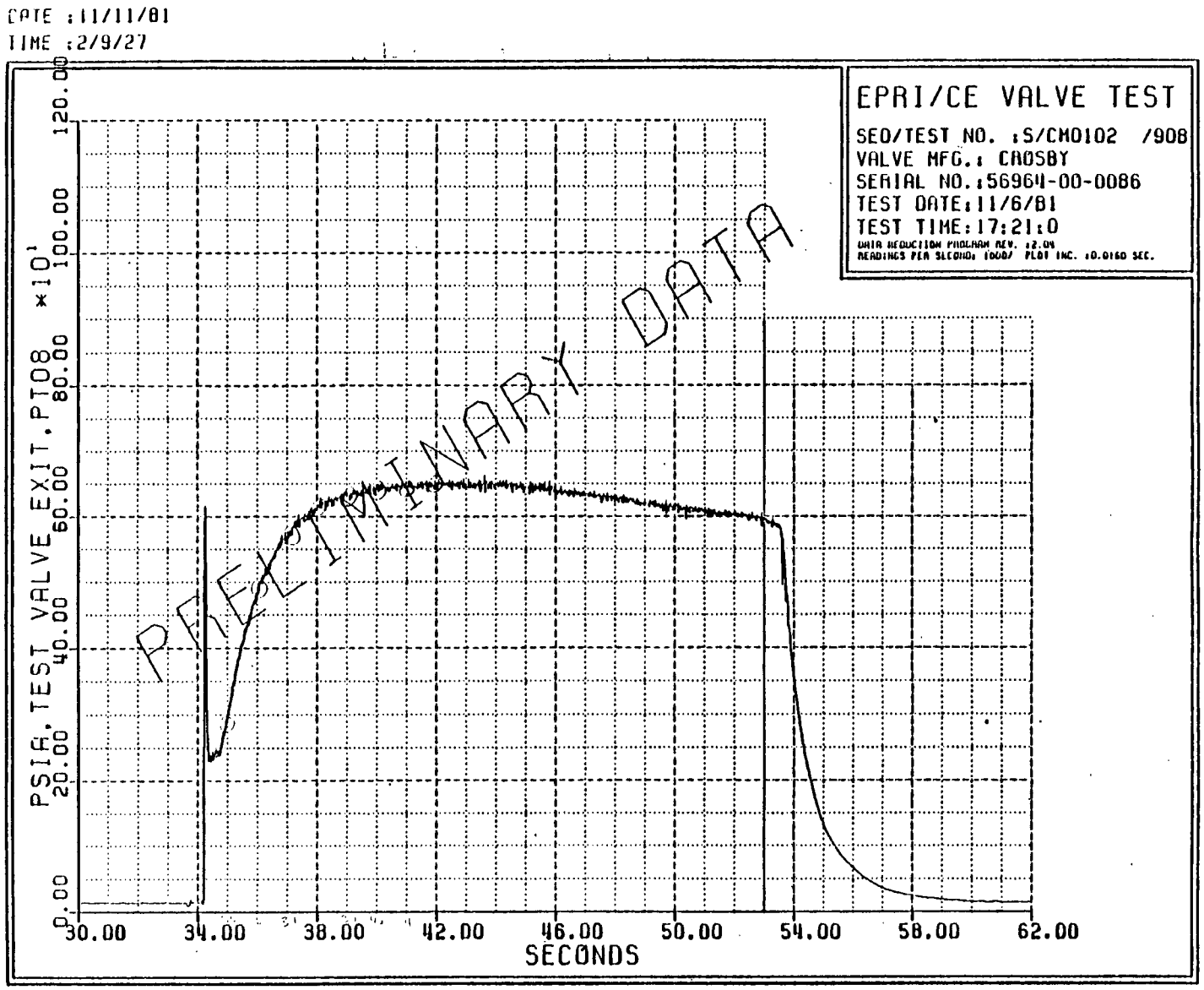

PRESSURE AT VALVE EXIT, TEST 908

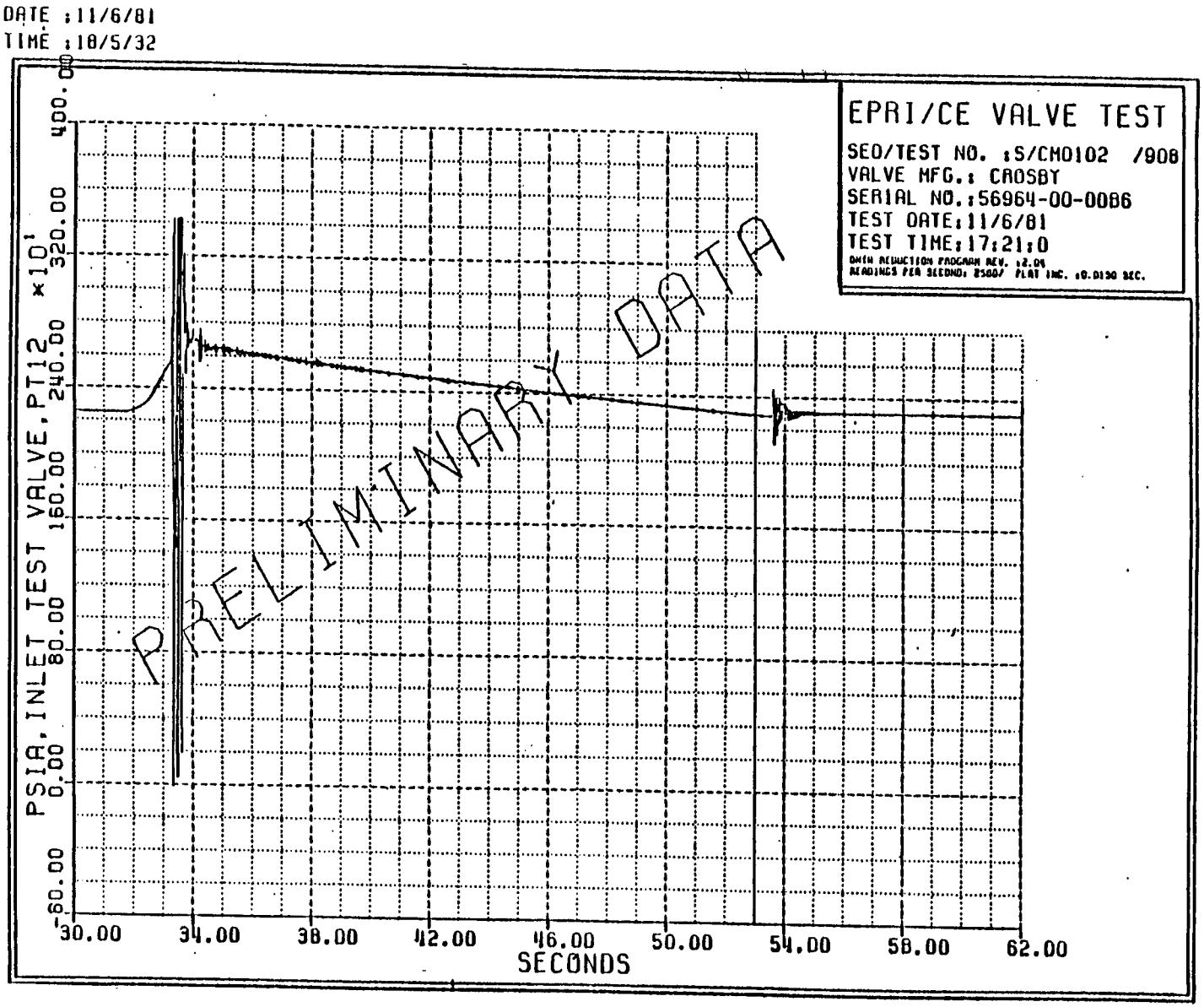

PRESSURE AT VALVE INLET, TEST 908

DATE :3/26/82
TIME :6/32/52

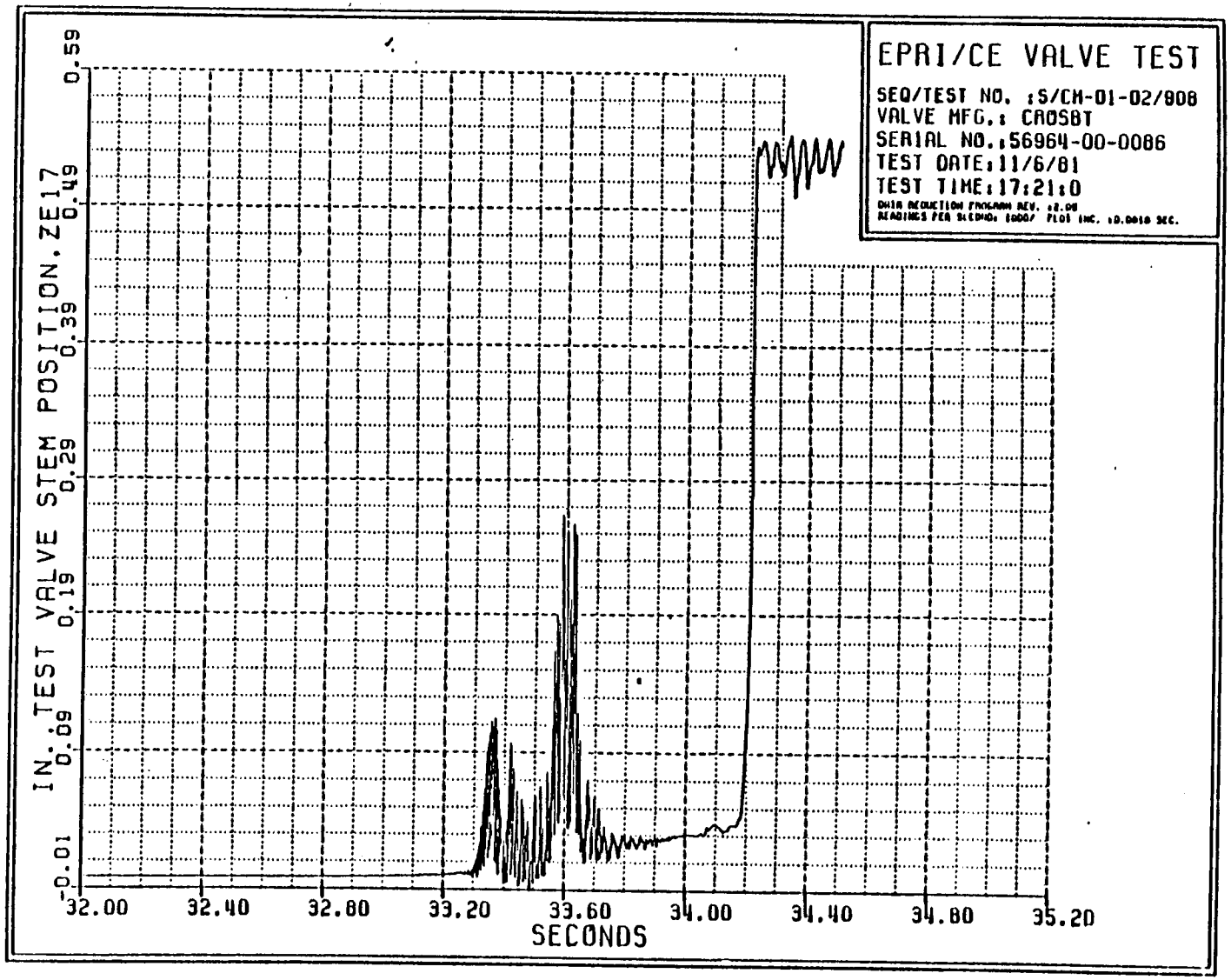

VALVE STEM POSITION, TEST 908

DATE :3/30/82
TIME :15/14/0

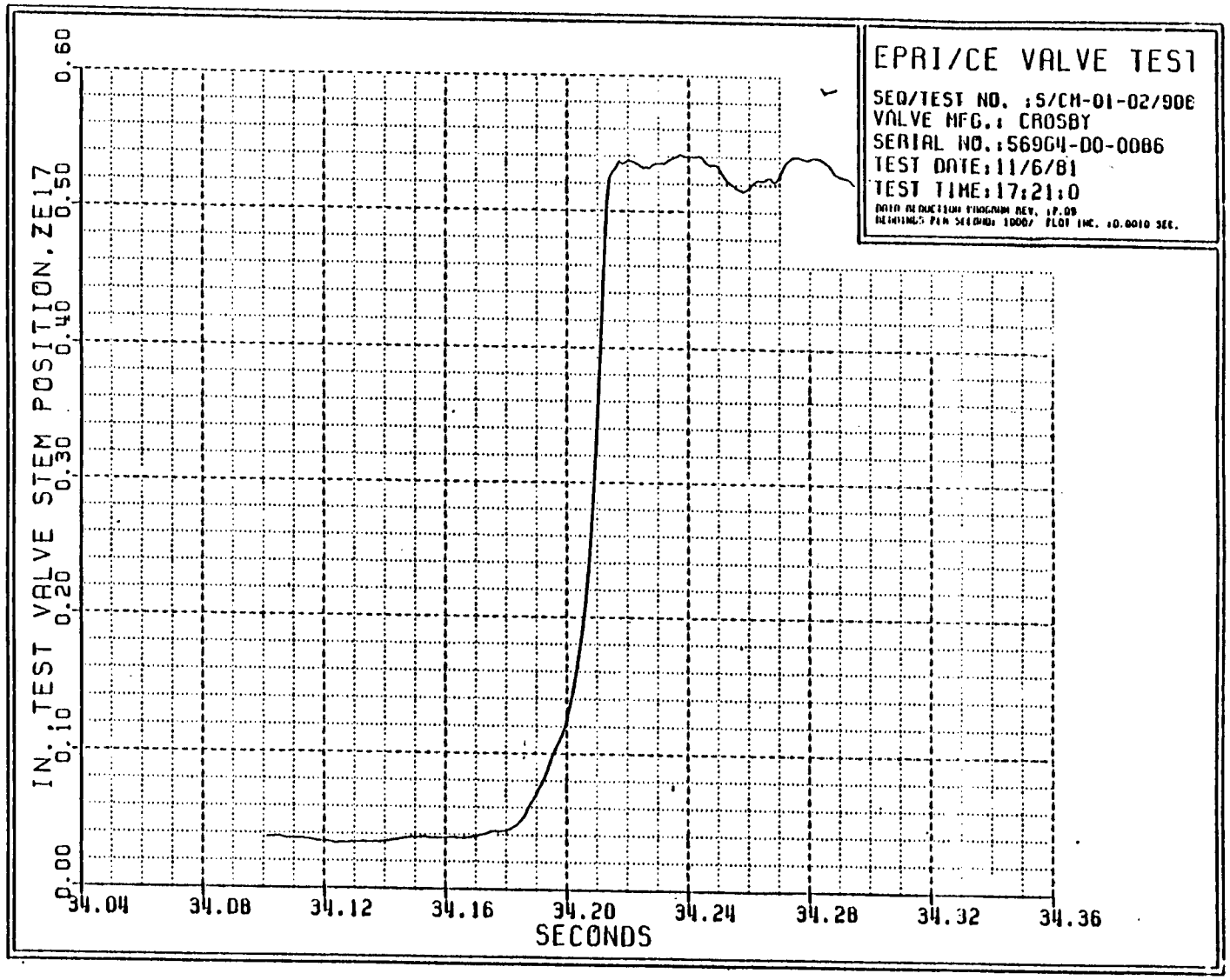

VALVE STEM POSITION, TEST 908

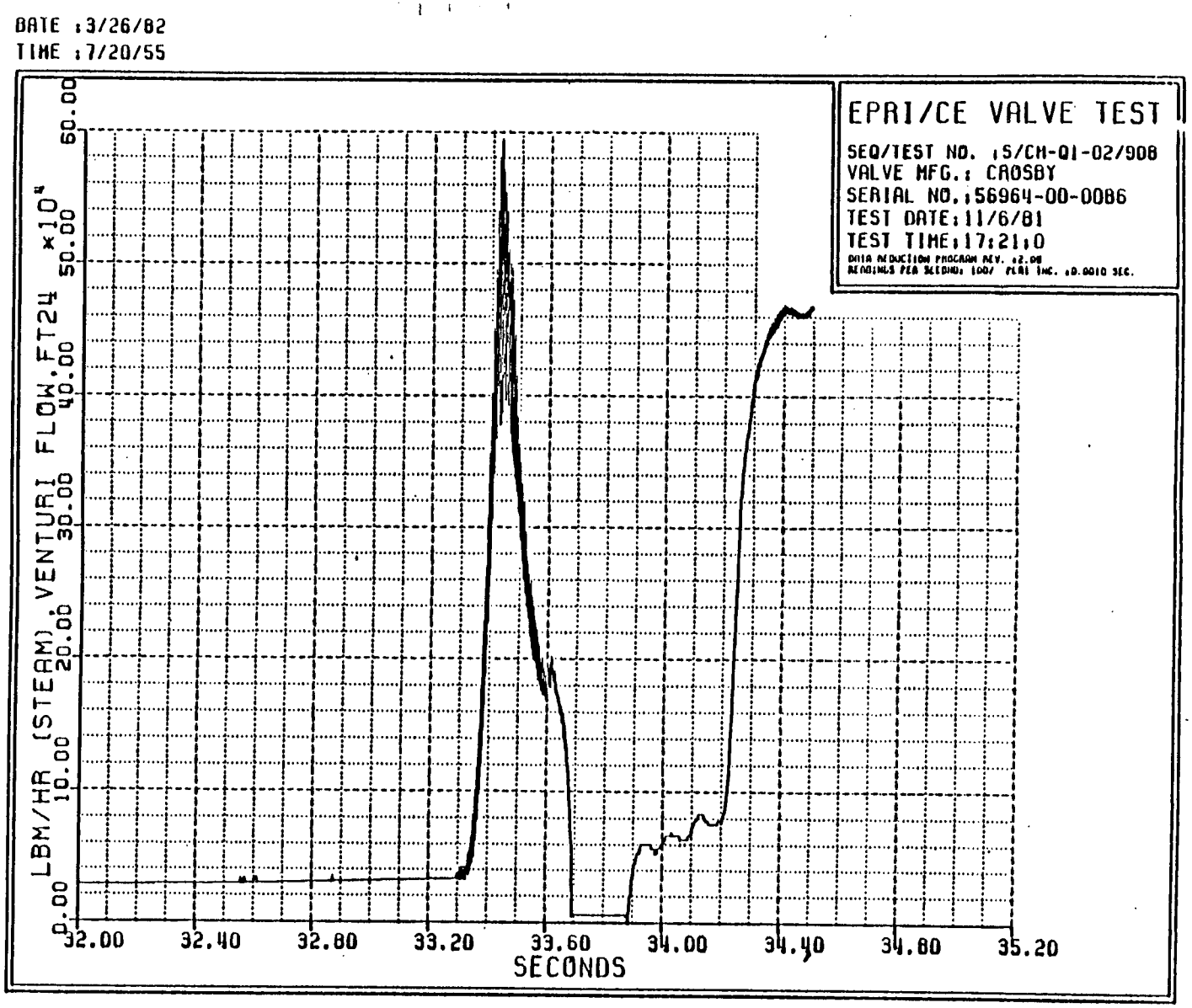

STEAM VENTURI FLOW, TEST 908