Proceedings of PVP2011
2011 ASME Pressure Vessels and Piping Division Conference
July 17-21, 2011, Baltimore, Maryland

PVP2011-57642

NRC Welding Residual Stress Validation Program International Round Robin Program and Findings

Howard J. Rathbun*‡
Office of Nuclear Regulatory Research, US Nuclear Regulatory Commission, Washington, DC

Lee F. Fredette, Paul M. Scott
Battelle Memorial Institute, Columbus, OH

Aladar A. Csontos, David L. Rudland
Office of Nuclear Regulatory Research, US Nuclear Regulatory Commission, Washington, DC

ABSTRACT

The U.S. Nuclear Regulatory Commission (NRC) and the Electric Power Research Institute (EPRI) are working cooperatively under a memorandum of understanding to validate welding residual stress (WRS) predictions in pressurized water reactor (PWR) primary cooling loop components containing dissimilar metal (DM) welds. These stresses are of interest as DM welds in PWRs are susceptible to primary water stress corrosion cracking (PWSCC) and tensile weld residual stresses are the primary driver of this degradation mechanism. The NRC/EPRI weld residual stress (WRS) analysis validation program consists of four phases, with each phase increasing in complexity from laboratory size specimens to component mock-ups and cancelled-plant material.

This paper discusses Phase 2 of the WRS characterization program involving an international round robin analysis project in which participants analyzed a prototypic reactor coolant pressure boundary component. Mock-up fabrication, WRS measurements and comparison with predicted stresses through the DM weld region are described.

The results of this study show that, on average, analysts can develop WRS predictions that are a reasonable estimate for actual configurations as quantified by measurements. However, the scatter in predicted results from analyst to analyst can be quite large. For example, in this study, the scatter in WRSs through the centerline of the main DM weld (prior to stainless steel weld application) predicted by analysts is approximately +/- 200 to 300 MPa at 3 standard deviations for axial stresses and +/- 300 to 400 MPa at 3 standard deviations for hoop stresses. Sensitivity studies that vary important parameters, such as material hardening behavior, can be used to bound such large variations.

INTRODUCTION

In pressurized-water reactor (PWR) coolant systems, nickel based dissimilar metal (DM) welds are typically used to join carbon steel components, including the reactor pressure vessel, steam generators, and the pressurizer, to stainless steel piping. Figure 1 shows a cross-section of a representative nozzle to piping connection, including the DM weld [1,2]. In Figure 1, the DM weld is indicated as "Alloy 82/182 Butt Weld." The DM weld is fabricated by sequentially depositing weld passes as high-temperature molten metal that cools, solidifies, and contracts, retaining stresses that approach or, potentially, exceed the material's yield strength.

These DM welds are susceptible to primary water stress-corrosion cracking (PWSCC) as an active degradation mechanism that has led to reactor cooling system pressure boundary leakage. PWSCC is driven by tensile weld residual stresses (WRS) and other applied loads within the susceptible DM weld material. Hence, proper assessment of these stresses is essential to accurately predict PWSCC flaw initiation, growth and stability.

Recent improvements in computational efficiency have facilitated advances in WRS predictions, but no universally accepted guidelines for these analyses have been established. Therefore, the assumptions and estimation techniques employed

* Responsible author address: MS-CSB 5C7M, Washington, DC 20555 e-mail: howard.rathbun@nrc.gov Phone: 301-251-7647 Fax: 301-251-7420

‡ This material is declared a work of the U.S. Government and is not subject to copyright protection in the United States. Approved for public release; distribution is unlimited. The views expressed herein are those of the authors and do not represent an official position of the U.S. NRC or Battelle Memorial Institute.

vary from analyst to analyst, causing large variability in the predicted residual stress profiles for a given weld.

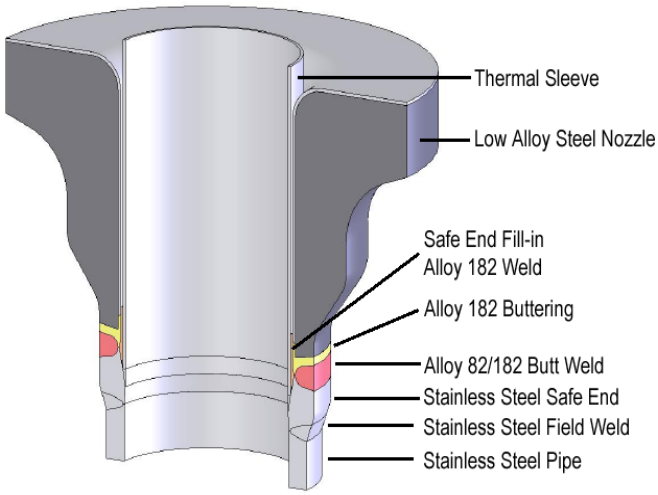

Figure 1. Representative Nozzle Cross Section

The U.S. Nuclear Regulatory Commission (NRC) staff and its contractors are completing a WRS analysis validation program aimed at both (1) refining computational procedures for residual stress simulations in DM welds, and (2) developing and categorizing the uncertainties in the resulting residual stress predictions. This program consists of four phases, with each phase increasing in complexity. Parts of this program are being cooperatively completed with the Electric Power Research Institute (EPRI) under a Memorandum of Understanding (MOU).[2][3]

The second phase of this program consists of an analytical international round-robin for validation of predicted WRSs in a prototypical PWR pressurizer surge nozzle geometry. This paper provides a summary of the round robin mock-up design, fabrication, WRS measurement, and FE analysis. The results from the round robin are to be validated through comparison of predicted residual stress fields with a variety of physical measurements performed on the mock-up. The validation is double blind, i.e., the FE analysis and measurement participants are not allowed to compare their results before submission, permitting the NRC staff to develop unbiased measures of uncertainties in WRS predictions.

The objectives of this research program include:

• Support the NRC's Office of Nuclear Reactor Regulation (NRR) development of appropriate WRS/flaw evaluation review guidelines.

• Perform independent confirmatory research on industry guidance for performing WRS analysis.

• Assess and evaluate the near-term adequacy of industry's mitigation activities where WRS minimization is necessary.

• Improve WRS finite element analysis (FEA) predictive methodologies.

• Assess variability of WRS (mean, scatter, and distribution).

• Determine estimates for the uncertainty and distribution of WRS, which are needed in probabilistic analyses (e.g., xLPR Code – eXtremely Low Probability of Rupture [4]).

MOCK-UP NOZZLE DESIGN AND FABRICATION

The geometry chosen for the WRS round robin is representative of a pressurizer surge nozzle, due to its safety significance and relevance to flaw evaluation [5]. The overall geometry is shown in Figure 2. For this mock-up, the nozzle (SA-105 nozzle from a cancelled reactor) is attached to a hot-rolled steel plate to represent the stiffness of the nozzle in service. The stiffened nozzle is buttered with Alloy 82 (AWS A5.14, ERNiCr-3, UNS N06082) weld material, post weld heat treated and then welded to a forged F316L stainless steel safe-end. Finally, the safe end is welded to a TP316 stainless steel, 14-inch diameter Schedule 160 stainless steel pipe using a TP308 weld.

The mock-up is fabricated in the following four steps. The carbon steel nozzle is buttered with 137 passes of Alloy 82. After heat treating and machining the butter, 40 passes of Alloy 82 are deposited to make up the main DM weld. The root of the main weld is then machined and 27 passes deposited with Alloy 82 to make up the 360 degree fill-in weld. At this point, residual stress measurements are made on the DM welds. The residual stress measurements are followed by the TP308 stainless steel safe-end to pipe weld, with a second set of residual stress measurements made investigating the effect of the safe-end to pipe weld. For the main DM weld and fill-in weld, laser profilometry measurements are made to map the contour of each weld pass.

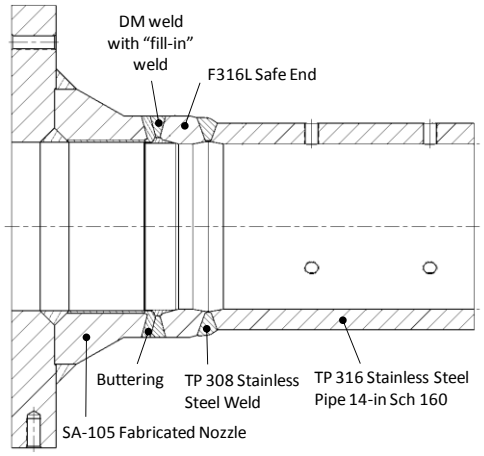

Figure 2. Mock-Up Nozzle

[2] The U.S. NRC and the EPRI signed a MOU to allow and encourage cooperation in nuclear safety research that benefits both the NRC and industry. This MOU is authorized under Section 31 of the Atomic Energy Act and Section 205 of the Energy Reorganization Act. The WRS Analysis Validation Project is being conducted under an addendum to the MOU to allow the NRC and EPRI to cooperatively and efficiently perform research on this project.

Temperature during mock-up welding is recorded as a function of time using thermocouples placed on the ID and OD. Six thermocouples are placed on the top center location during the butter welding (three thermocouples each on the ID and OD). Thermocouple measurements are also made at both the 45 degree and 90 degree locations (again three thermocouples each on the ID and OD). For the repair and fill-in weld, the same thermocouple location could not be used and the locations of the ID thermocouples were shifted axially.

The materials for each component of the mock-up are shown in Table 1.

Table 1. Nozzle Mock-Up Materials

Component	Material
Nozzle	Carbon steel (SA-105)
DM weld (including buttering, and fill-in)	Alloy 82: AWS A5.14 ERNiCr-2 (UNS N06082)
Safe end	F316L forged stainless steel
Stainless Pipe	TP 316 stainless steel, 14-inch diameter Schedule 160
Stainless Steel Weld	TP 308stainless steel

The main DM weld is deposited using gas tungsten arc welding (GTAW) with 40 passes of 0.045-in. (1.1-mm)-diameter Inconel 82 welding wire being fed externally. Typical welding parameters for the main DM weld are given in Table 2.

Table 2. Typical Parameters for Main DM Weld

Parameter	Value
Current	220-285 A
Voltage	10.7-11.2 V
Travel Speed	2.54 mm/s

After the main DM weld is completed, the ID is machined to simulate the cavity for a 360 degree weld repair. The fill-in weld is deposited using GTAW with a total of 27 passes. The typical welding parameters used to deposit each weld pass are listed in Table 3.

Table 3. Typical Parameters for Fill-in Weld

Parameter	Value
Current	200 A
Voltage	15.5 V
Travel Speed	2.54 mm/s

The safe end to stainless steel pipe weld with material TP308 is completed in 28 passes with weld parameters given in Table 4.

Table 4. Typical Parameters for Stainless Steel Weld

Parameter	Value
Current	90 - 147 A
Voltage	9.2 - 26 V
Travel Speed	1.27 mm/s

WELD RESIDUAL STRESS MEASUREMENTS

To provide data against which the FE analyses can be validated, a suite of WRS measurements are made on the round robin mock-up. For this configuration, the through-wall axial and hoop stresses are of greatest interest since, in in-plant configurations, these stresses lead to circumferential and axial flaws, respectively. The measurement strategy involves using multiple measurement techniques to develop the full profile of surface, sub-surface, and through-thickness stress distributions. Two categories of WRS measurement techniques currently exist:

1. Strain-relief based, in which the stressed material is separated, resulting deformations are measured, and the original residual stresses back-calculated (e.g., deep hole drilling, incremental hole drilling, contour and slitting techniques)[6,7];

2. Diffraction based, in which stressed material lattice spacing is measured and compared to representative stress-free material (e.g., neutron diffraction and x-ray diffraction techniques) [8,9].

For the round robin mockup, incremental hole drilling (IHD) and X-ray diffraction (XRD) are chosen for surface measurements, and deep hole drilling / incremental deep hole drilling (DHD/iDHD) [6] is chosen for through-thickness measurements. Neutron diffraction WRS measurements have not been taking on the round robin mock-up, but may be completed in the future. One primary goal of the round robin study is to assess the effect of the safe end to stainless steel pipe weld on stresses in the main DM weld. Hence, the above suite of WRS measurements are taken before and after completion of the safe end to stainless steel weld. Figure 3 shows the location of the various WRS measurements taken: the DHD/iDHD measurements are taken through the centerline of the DM weld and the XRD measurements are taken along axial lines on the ID and OD of the DM weld. The IHD measurements were taken on the ID and OD of the DM weld. Two sets of measurements are taken for each technique, both prior to and following the stainless steel weld, diametrically opposed to one another.

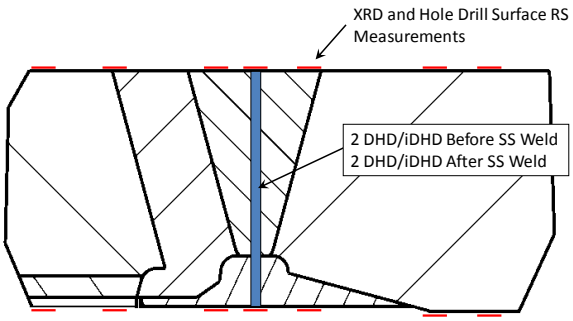

Figure 3. Measurement Locations

Figures 4 and 5 show the DHD/iDHD WRS measurement results for both axial and hoop stress components before application of the stainless steel weld as a function of through thickness distance from the inner diameter (ID) to the outer diameter (OD) through the centerline of the DM weld. As is typical of configurations in which the final weld passes are completed on the ID, the pre-stainless steel weld axial stress component is highly tensile at the ID and follows a commonly observed profile thereafter. Equilibrium considerations require that, on average, the integrated through-wall area under the axial stress distribution curve equate to zero. This is reasonably observed in the DHD/iDHD results, indicating that the component's stress distribution is axi-symmetric. The pre-stainless steel weld hoop stress distribution remains highly tensile between approximately 200 and 500 MPa.

In the current paper, only DHD/iDHD results are presented and discussed. The XRD and IHD results will be presented in a future publication.

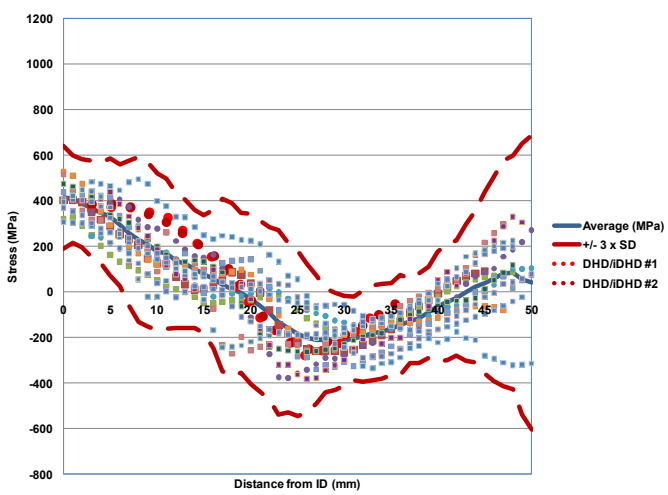

Figure 4. Axial Stress Before Stainless Steel Weld. Measured results (DHD/iDHD) are as indicated and the remaining data points are round robin analyst FE results.

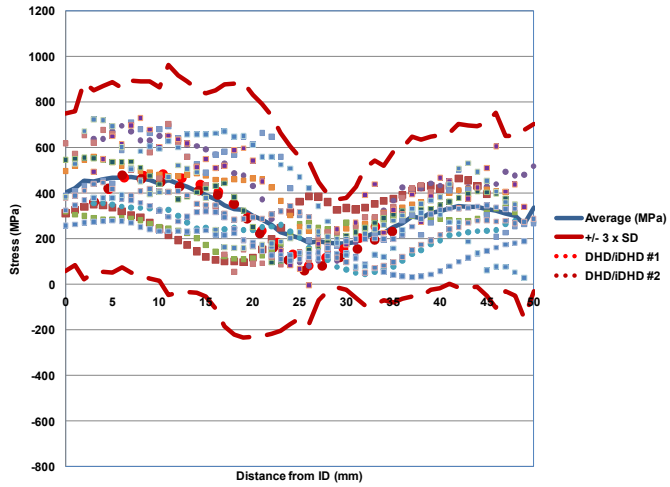

Figure 5. Hoop Stress Before Stainless Steel Weld. Measured results (DHD/iDHD) are as indicated and the remaining data points are round robin analyst FE results.

WRS measurements taken after the stainless steel weld are shown in Figures 6 and 7. The effect of the stainless steel weld is apparent: inner diameter axial and hoop stresses are significantly reduced. This observation is important since a stress corrosion crack may initiate at a location of tensile stress on the pipe ID; hence, SCC initiation likelihood is lowered where ID stresses are reduced.

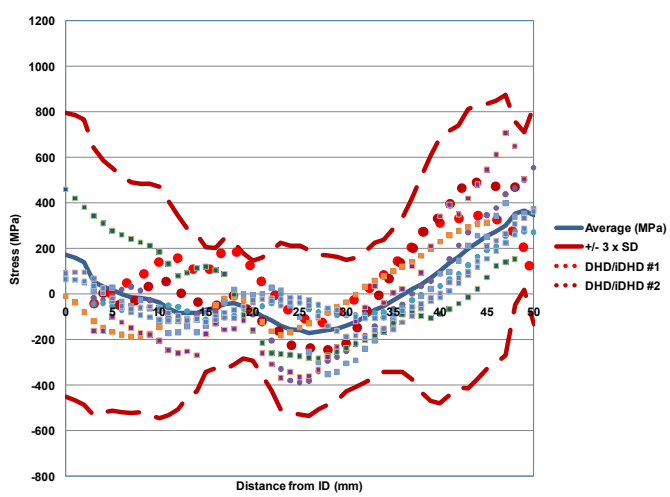

Figure 6. Axial Stress After Stainless Steel Weld. Measured results (DHD/iDHD) are as indicated and the remaining data points are round robin analyst FE results.

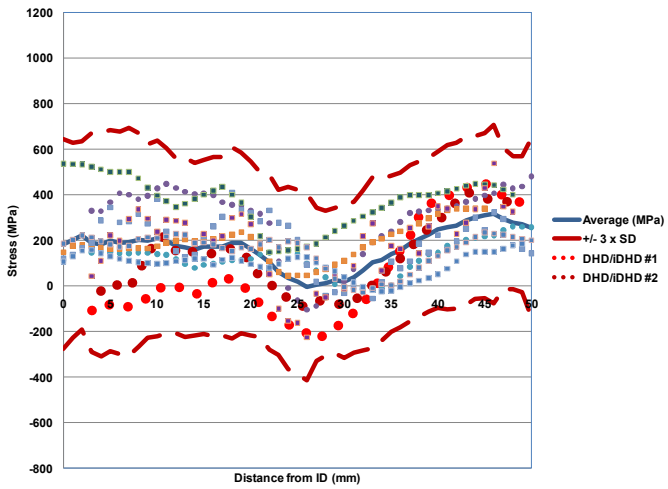

Figure 7. Hoop Stress After Stainless Steel Weld. Measured results (DHD/iDHD) are as indicated and the remaining data points are round robin analyst FE results.

FINITE ELEMENT ANALYSIS

For the analysis portion of the round robin, 17 participant groups from 8 different countries performed FEA modeling of the mock-up geometry fabrication process. Note that although there are 17 participants in the round robin, as of the date of this writing, not all participants have submitted their results. Due to the dissemination of the measurement results via this publication, subsequent analysis results received cannot be considered "blind".

To provide consistency with the WRS measurement conditions, the round robin FE analysis was broken down into two portions:

1. Analysis of main DM weld, ID machining and re-weld application.

2. Analysis of safe end to stainless steel pipe weld application (focusing on the resulting change in stress distribution in the main DM weld).

In the original analysis protocol, the first analysis described above was broken down into portions where the analysts were required to use their own material mechanical properties, and without the benefit of thermocouple temperature measurements. Subsequently, material properties appropriate to the actual mock-up and thermocouple data were provided to the analysts. These iterations in the protocol were found to have a small effect on the results provided by analysts; hence, for brevity, the differences in these results are not provided here.

In completing the round robin, each analyst is asked to provide line plots for axial and hoop stress components through the centerline of the main DM weld. Since the measurements are taken at room temperature, the analysis results are extracted at room temperature after the final step of the welding procedure.

Additional parameters of secondary importance are requested in the initial Round Robin problem statement, including radial stress, strain components, temperature time history at thermocouple locations, distortion measurements and calculated heat affected zone size. To retain brevity in the current work, these comparisons will be reported in future publications.

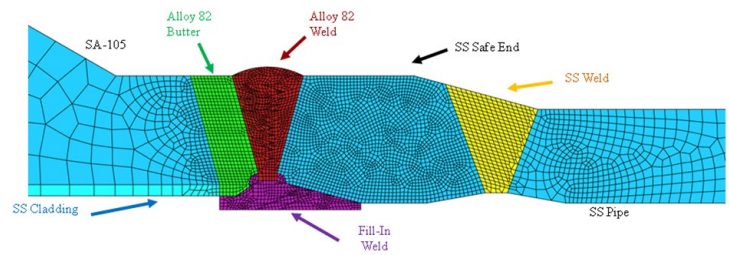

Figure 8. Typical FEA Model Geometry

Figure 8 shows a typical FE geometry for the WRS round robin. Figures 4 and 5 show the axial and hoop stress distributions, respectively, through the centerline of the DM weld prior to the application of the stainless steel weld reported by the various round robin analysts. The results are plotted vs. through thickness distance from the ID to the OD. At one millimeter increments, the results are averaged and +/- 3 standard deviation values calculated and plotted. For the axial stresses, the general trend in the average calculated result is in reasonable agreement with the measured results, although there is a significant difference in some portions of the curves. The scatter in the FE results is large, with +/- 200 to 300 MPa at 3 standard deviations. For the hoop stresses, the same general comments can be made, although the scatter is significantly larger, with +/- 300 to 400 MPa at 3 standard deviations.

Figures 6 and 7 show the calculated axial and hoop stress distributions, respectively, through the centerline of the DM weld after application of the stainless steel weld. Once again, the average and +/- 3 standard deviation values are provided as solid blue and dotted red lines, respectively. For the axial stress component, the average of the calculated values follows a similar trend to the through-wall DHD/iDHD measurements, but the actual values differ by up to approximately 200 MPa in places. Clearly, the average calculated axial ID stress is reduced by approximately 200 MPa to near zero. Regarding the hoop stress component in Figure 8, the calculated result average shows a similar trend to the measured data, however the stress magnitudes differ by up to approximately 300 MPa in portions of the curve.

DISCUSSION

There is clearly a significant amount of scatter in the calculated residual stress profiles; it would be unreasonable to anticipate that a particular analysis result represents a highly accurate representation of a residual stress distribution in an

actual component. In the context of flaw evaluation, since initiation, growth and stability depend strongly on residual stress profiles, either a conservative margin must be placed on calculated residual stresses, or appropriate parameter variation sensitivity studies be performed. Although the average measurements and FE analysis results differ in places by significant stress levels, given the overall scatter in the results, to a reasonable approximation, they do occupy the same distribution.

In reviewing input parameters provided by round robin participants, the stress results are highly sensitive to some parameters and models, and relatively insensitive to others. Of highest significance is the assumed weld material hardening behavior. Generally, analysts who apply an isotropic strain hardening law calculate higher stresses than those who apply kinematic hardening; results from these two types of hardening law are at the high end of the distribution of results for isotropic hardening and low end for kinematic hardening. This implies that, in flaw evaluation studies, variation in hardening law would be an appropriate sensitivity study.

Applying as-deposited weld properties yields higher stress values than annealed properties. In the current study mock-up fabrication, the butter is heat treated (which may be better represented by annealed mechanical properties), and the main DM weld is not (which may be better represented by as-deposited mechanical properties).

The order of bead deposition, bead geometry and fabrication play an important role in calculated stresses. The effect of the stainless steel weld to significantly reduce the ID stresses has been demonstrated in this study. Further, to gain greater accuracy, the weld should be modeled as close to the known fabrication sequence as possible. For example, the fabrication sequence of DM weld, groove machining and re-weld used in the current study (and typical of how many nozzles were fabricated in the current fleet of operating reactors) is critical to obtaining a stress distribution that falls within the correct distribution. The ID groove is representative of a repair weld; hence, for future evaluations, evidence of a weld repair should be modeled in the analysis. Uncertainty in the existence of a weld repair could be addressed with a sensitivity study.

Somewhat surprisingly, the results appear to be relatively insensitive to the form of the heat input model. It appears that as long as the total amount of heat input is correct (i.e. as long as the power is applied over an appropriate amount of time) then the results will be valid. Note that the time over which the heat is applied is also an important parameter, i.e. the correct amount of heat energy applied over a very long time frame will yield very different thermal and structural results.

There is no inherent reason why different FEA codes should provide different results. For example, preliminary sensitivity studies completed with the ANSYS [10] and ABAQUS [11] FEA codes have shown that the two codes are capable of providing effectively identical results. Early on in the investigation, it was felt that the treatment of annealing is fundamentally different in the two codes; however, the results indicate that, when properly applied by the analyst, the two codes provide consistent results. The results of these and other sensitivity studies will be presented in a future publication.

CONCLUSIONS

The results of a double blind international weld residual stress round robin are presented. Based on measured and calculated residual stress profiles, the mock-up fabricated in the current study has good correlation to known in-plant configurations.

In the current study, the average of the measured results occupies the same distribution as the FE calculated results. As a corollary, in future assessments, a statistical uncertainty must be taken into consideration. For example, in this study, for axial stress, an uncertainty of roughly +/- 200 MPa between analysis and measurement results is reasonable at any particular point in the weld cross section.

While the round robin participants did a good job of calculating residual stress profiles, in future flaw evaluation analyses of actual in-plant components, sensitivity studies of important parameters (such as strain hardening law assumption and order of weld bead deposition), are critical. Weld bead geometry approximation is important, but matching the precise bead cross section geometry appears unnecessary: rectangular cross section beads are generally easier, more efficient, and provide sufficient accuracy.

ACKNOWLEDGMENTS

The authors would like to thank the following:

- Paul Crooker of EPRI and John Broussard of Dominion Engineering Incorporated for technical cooperation in the joint NRC-EPRI program
- Dr. Matthew Kerr for many insightful discussions
- Pacific Northwest National Laboratory, Edison Welding Institute and Richard Olson at Battelle Memorial Institute for Mockup Design/Fabrication
- Engineering Mechanics Corporation of Columbus for providing material properties for the round robin
- Veqter, Ltd. of the United Kingdom for DHD/iDHD measurements

REFERENCES

[1] Shim, D. J., Kalyanam, S., Punch, E., Zhang, T., Brust, F.W., Wilkowski, G., Goodfellow, A., and Smith, M., “Advanced Finite Element Analysis (AFEA) Evaluation for Circumferential and Axial PWSCC Defects”, Proceedings of the 2010 ASME Pressure Vessel Piping conference, Seattle, WA, Paper PVP2010-25162, July 2010.

[2] Rudland, D., Zhang, T., Wilkowski, G., Csontos, A., 2008 “Welding Residual Stress Solutions for Dissimilar Metal Surge Line Nozzles Welds,” ASME Pressure Vessels and Piping Conference, PVP2008-61285, Chicago, Illinois.

[3] Addendum to the Memorandum of Understanding (MOU) between NRC's Office of Nuclear Regulatory Research and Electric Power Research Institute, Inc. on Cooperative Nuclear Safety Research”, NRC ADAMS Accession Number ML103490002, 2/15/2011.

[4] Rudland, D., Kurth, R., Bishop, B., Mattie, P., Klasky, H., Harris, D., 2010 “Development of Computational Framework and Architecture for Extremely Low Probability of Rupture (XLPR) Code,” ASME Pressure Vessels and Piping Conference, PVP2010-25963, Seattle, Washington.

[5] US Nuclear Regulatory Commission, Office of Nuclear Regulatory Research, Division of Engineering, Component Integrity Branch: International Weld Residual Stress Round Robin Problem Statement.

[6] Kingston, E. J., Stefanescu, D., Mahmoudi, A. H., Truman, C. E., and Smith, D. J., “Novel Applications of the Deep-Hole Drilling Technique for Measuring Though-Thickness Residual Stress Distributions,” Journal of ASTM International, April 2006, Vol. 3, No. 4.

[7] Fredette, L.F., Kerr, M., Rathbun, H.J., Broussard, J.E., "NRC/EPRI Welding Residual Stress Validation Program - Phase III Details and Findings," ASME Pressure Vessels and Piping Conference, PVP2011- 57645, Baltimore, Maryland.

[8] Wang, X-L., Feng, Z., Spooner, S. Hubbard, C. R., and Taljat, B., 1998. “Characterization of Welding Residual Stresses with Neutron Diffraction,” Proc. Taiwan Int. Welding Conf., 155-161.

[9] Noyan, I.C., Cohen J.B., Residual Stress Measurement by Diffraction and Interpretation, NewYork: Springer-Verlag: 1987.

[10] ANSYS Finite Element Computer Code, Version 12.1, ANSYS, Inc., Canonsburg, PA.

[11] ABAQUS User Manual, Simulia, Dassault Systems, version 6.10, 2010.