REGULATORY INFORMATION DISTRIBUTION SYSTEM (RIDS)

ACCESSION NBR:8103310652 DOC.DATE: 81/03/23 NOTARIZED: NO DOCKET #
FACIL:50-305 Kewaunee Nuclear Power Plant, Wisconsin Public Servic 05000305
AUTH.NAME AUTHOR AFFILIATION
MATHEWS,E.R. Wisconsin Public Service Corp.
RECIP.NAME RECIPIENT AFFILIATION
VARGA,S.A. Operating Reactors Branch 1

SUBJECT: Forwards addl info re rating valve operator at various openings.Analysis indicates valve & operator are qualified to accept LOCA induced loads.Four oversize drawings encl. Aperture cards will be available in PDR.

DISTRIBUTION CODE: A001S COPIES RECEIVED:LTR 1 ENCL 1 SIZE: 30+H
TITLE: General Distribution for after Issuance of Operating License

NOTES:I&E:3 copies all material. 05000305

	RECIPIENT ID CODE/NAME		COPIES LTTR	COPIES ENCL	RECIPIENT ID CODE/NAME		COPIES LTTR	COPIES ENCL
ACTION:	VARGA,S.	04	13	13				
INTERNAL:	D/DIR,HUM FAC	08	1	1	DIR,DIV OF LIC		1	1
	I&E	06	2	2	NRC PDR	02	1	1
	OELD	11	1	0	OR ASSESS BR	10	1	0
	REG FILE	01	1	1				
EXTERNAL:	ACRS	09	16	16	LPDR	03	1	1
	NSIC	05	1	1				

Aperture Dist

Send Drawings to:

BC

APR 3 1981

TOTAL NUMBER OF COPIES REQUIRED: LTTR ~~39~~ 42 ENCL ~~37~~ 40

NRC-81-42

WISCONSIN PUBLIC SERVICE CORPORATION

P.O. Box 1200, Green Bay, Wisconsin 54305

March 23, 1981

Mr. Steven A. Varga, Chief
Operating Reactors Branch #1
Division of Licensing
U. S. Nuclear Regulatory Commission
799 Roosevelt Road
Glen Ellyn, IL 60137

Dear Mr. Varga:

Operating License DPR-43
Docket 50-305
Letter of December 23, 1980, from Mr. Varga to Mr. E. R. Mathews
Letter of February 5, 1981, from Mr. E. R. Mathews to Mr. Steven A. Varga

The questions in Enclosures 1 and 2 of the above referenced letter have been reviewed.

In the course of this review, additional information on the valve operator was obtained by the valve manufacturer. This information concerns the rating of the valve operator at various openings. Factoring this information into the analysis previously prepared for Wisconsin Public Service, the conclusion was drawn that the valve and operator are qualified to accept LOCA induced loads.

Based on this conclusion, we will remove the limit stops installed during the 1980 refueling outage in accordance with the provisions of 10CFR50.59.

Our response is delayed from the 45 day time period requested in the referenced letter. This is in accordance with arrangements made with you in our February 5, 1981, letter.

Very truly yours,

ER Mathews

E. R. Mathews, Vice President
Power Supply & Engineering

snf

Enc.

cc - Mr. Robert Nelson, NRC Resident Inspector
RR #1, Box 999, Kewaunee, WI 54216

A001
S
1/1
APERTURE Dist.
SEND DRAWING to:
BC.

8103310652

P

KEWAUNEE NUCLEAR POWER PLANT
REQUEST FOR ADDITIONAL INFORMATION REGARDING
LONG TERM OPERABILITY OF CONTAINMENT PURGE
AND VENT VALVES
PART 1

1. Please clarify the description of valve installation and orientation; provide a diagram disclosing essential information.

The valve orientation and installation is depicted by drawings M627, M628, M629 and M648 which are enclosed.

2. Are C_t values used for T_d determination considered applicable to Kewaunee valves based on consideration of installation, i.e., relation to upstream elbows, shaft orientation relative to upstream elbows, disc closure direction, flow direction (off-set discs).

The analysis performed considered the actual direction of flow. This flow resulted in higher torque to the valve/operator. The effect of upstream piping has been ignored as a conservative approach. The worse case is determined to be a single valve closure with containment pressure on one side and atmosphere on the other. It is in this configuration in which the analysis was done.

3. Is 2 second valve closure time the maximum time allowed by Tech Specs. If not, what is maximum time allowed.

There is no closure time required by the Kewaunee Technical Specifications.

4. Confirm that modifications made to limit openings to 65° provides sufficient torque margin to seat valve against seating and bearing torque.

The modification will be reversed at the next refueling outage resulting in valves in their original conditions.

5. Are the solenoid valves and operators seismically and environmentally qualified for the plant specified conditions?

The solenoid valves and operators are fully qualified.

6. Has the valve assembly (operator and valve body) been seismically qualified? How?

The valve assembly has been qualified by analysis.

7. Is there a post-LOCA operational requirement for these valves? Have the valves been reviewed for operation capability under these post-LOCA conditions?

There is no post-LOCA requirement for the vent and purge valves to operate.

8. Are the manufacturers required/recommended preventive maintenance practices being followed:

   a. Valve seats and seals

   b. Operators

   c. Solenoid valves

The valves are leak tested annually in accordance with Section 4.4 of the Kewaunee Technical Specifications. This testing along with cycling during refueling operations is sufficient to assure operability of these valves.

9. Describe the ASME Section XI inservice testing being conducted on or planned for the valves.

The valves are subject to the integrated leak rate test as well as their own leak rate test. This is described in Section 4.4 of the Kewaunee Technical Specifications.

KEWAUNEE NUCLEAR POWER PLANT

REQUEST FOR ADDITIONAL INFORMATION REGARDING

LONG TERM OPERABILITY OF CONTAINMENT PURGE

AND VENT VALVES

PART II

1. The Δ P across the valve is in part predicated on the containment pressure and gas density conditions. What were the containment conditions used to determine the Δ P's across the valve at the incremental angle positions during the closure cycle?

   The containment pressure trend is taken from figure 14.3-23 of the Kewaunee FSAR. No credit was taken for a reduction of containment pressure due to valve closure time. That is, the containment pressure was considered constant and was taken to be the maximum pressure during the valve closure sequence.

2. Were the dynamic torque coefficients used for the determination of torques developed, based on data resulting from actual flow tests conducted on the particular disc shape/design/size? What was the basis used to predict torques developed in valve sizes different (especially larger valves) than the sizes known to have undergone flow tests?

   The dynamic torque coefficients were developed using a 5" scale model with dry air as the medium. These are dimensionless coefficients derived from standard dimensional analysis and modeling techniques. Such techniques are described in "Fluid Mechanics," by Strecter, Fourth Edition. Pratt has successfully applied such data for torque analyses on valves exceeding 10 feet in diameter.

3. Were installation effects accounted for in the determination of dynamic torques developed? Dynamic torques are known to be affected for example, by flow direction through valves with off-set discs, by downstream piping backpressure, by shaft orientation relative to elbows, etc. What was the basis (test data or other) used to predict dynamic torques for the particular valve installation?

   Installation effects were taken into account in the flow analysis of these valves. The direction of flow through the valve was taken into account, however, the effect of upstream piping is conservatively ignored. The effects of valve orientation relative to the pipe axis are considered insignificant for compressible fluid flow.

   Based on theoretical limits and Pratt test data, the highest torque value will be experienced by a valve with direct valve inlet with rounded inlet throat-nozzle. This is the configuration used in the Kewaunee analysis.

4. When comparing the containment pressure response profile against the valve position at a given instant of time, was the valve closure rate vs. time (i.e., constant or other) taken into account? For air operated valves equipped with spring return operators, has the lag time from the time the valve receives a signal to the time the valve starts to stroke been accounted for?

Note: Where a butterfly valve assembly is equipeed with spring to close air operators (cylinder, diaphragm, etc.), there typically is a lag time from the time the isolation signal is received (solenoid valve usually de-energized) to the time the operator starts to move the valve. In the case of an air cylinder, the pilot air on the opening side of the cylinder is approximately 90 psig when the valve is open, and the spring force available may not start to move the piston until the air on this opening side is vented (solenoid valve de-energizes) below about 65 psig, thus the lag time.

When comparing the containment pressure trend against the valve position, a constant closure time of 2 seconds was used. In addition, a delay time of 2.2 seconds between event initiation and the start of valve stroking was used. The pressure at 4.2 seconds from the event initiation was used to generate the flow profile.

5. Provide the necessary information for the table shown below for valve positions from the initial open position to the seated position (10° increments if practical).

Valve Position (90° = full open)	*Predicted ΔP*	*Maximum ΔP*
10°	24.66	75 psi
20°	24.52	75 psi
30°	24.29	75 psi
40°	23.98	75 psi
50°	23.60	75 psi
60°	23.16	75 psi
70°	22.67	75 psi
80°	22.15	75 psi
90°	21.61	75 psi

6. What Code, standards or other criteria, was the valve designed to? What are the stress allowables (tension, shear, torsion, etc.) used for critical elements such as disc, pins, shaft yoke, etc. in the valve assembly? What load combinations were used?

The valves were designed to "Draft ASME Code for Pumps and Valves for Nuclear Power" dated November, 1968 and the March, 1970 Addendum.

The following table summarizes the allowable stress values.

Valve Component	Stress Name	Stress Level	Allowable Stress
Trunnion Weldment Assy.	Combined Trunnion Weld Shear Stress	2,150	.5 Sm 8,850
	Combined Tensile Stress in Trunnion	1,635	Sm 17,700
	Combined Tensile Stress in Trunnion Base Weld	1,636	Sm 17,700
	Local Bending Stress in Body	13,000	Sm 18,900
Disc	Maximum Disc Stress	11,740	Sm 18,900
Shaft	Maximum Shaft Stress	15,730	Sm 19,800
Shaft Retainer Assembly	Retainer Shear Stress	2,750	.5 Sm 9,900
	Retainer Bearing Stress	14,000	Sm 19,800
	Bolt Tensile Stress	21,000	Sm 46,200
	Shaft Groove Shear Stress	1,800	.5 Sm 9,900
Hub Block Assembly	Keyway Bearing/(Shear Str.) Stress	(15,720)	Sm 17,700
	Max. Combined Bolt Stress	26,565	Sm 46,200
Thrust Bearing Assembly	T. Washer Normal Bearing Stress	374	1,200
	T. Washer Seismic Bearing Stress	1,870	8,000
	Adjusting Screw Shear Stress	6,240	.5 Sm 10,000
	Adjusting Screw Tensile Stress	14,800	Sm 20,000
	Retaining Screw Tensile Stress	17,700	Sm 45,200
	Cover Shear Stress	2,600	15 Sm 9,450

Notes:

1. Seismic accelerations are 5 g's. simultaneously applied in each of three mutually perpendicular directions.

2. Analysis pressure is 65 psig.

3. Allowable stresses are at 300°F.

7. For those valve assemblies (with air operators) inside containment, has the containment pressure rise (backpressure) been considered as to its effect on torque margins available (to close and seat the valve) from the actuator? During the closure period, air must be vented from the actuators opening side through the solenoid valve into this backpressure. Discuss the installed actuator bleed configuration and provide basis for not considering this backpressure effect a problem on torque margin. Valve assembly using 4 way solenoid valve should especially be reviewed.

The operators on the purge and vent valves at Kewaunee are air to open and spring to close. Containment backpressure will have no effect on closing since the same backpressure will also be present at the inlet side of the cylinder, and the differential pressure will be the same during normal operation.

8. Where air operated valve assemblies use accumulators as the fail-safe feature, describe the accumulator air system configuration and its operation. Provide necessary information to show the adequacy of the accumulator to stroke the valve i.e. sizing and operation starting from lower limits of initial air pressure charge. Discuss active electrical components in the accumulator system, and the basis used to determine their qualification for the environmental conditions experienced. Is the accumulator system seismically designed?

This does not apply to Kewaunee.

9. For valve assemblies requiring a seal pressurization system (inflatable main seal), describe the air pressurization system configuration and operation including means used to determine that valve closure and seal pressurization have taken place. Discuss active electrical components in this system, and the basis used to determine their qualification for the environmental condition experienced. Is this system seismically designed.

For this type valve, has it been determined that the "valve travel stops" (closed position) are capable of withstanding the loads imposed at closure during the DBA-LOCA conditions.

This does not apply to Kewaunee.

10. Where it is planned to limit the opening angle of the butterfly valve to less than 90°; describe the modification made to the valve assembly to limit the opening angle? With this modification, is there sufficient torque margin available from the operator to overcome any dynamic torques developed that tend to oppose valve closure, starting from the valve's initial open position? Is there sufficient torque margin available from the operator to fully seat the valve? Consider seating torques required with seats that have been at low ambient temperatures.

The containment purge and vent valves at Kewaunee have been modified to limit the valve opening to 65°. We have received updated information from the operator manufacturer, through the valve manufactures which further delineates torque values at various valve openings. As a result of this additional information, the valve manufacturers now concludes that the valve

opening need not be restricted. We plan to remove the limit stops during the next refueling outage in accordance with the provisions of 10CFR50.59.

11. Does the maximum torque developed by the valve during closure exceed the maximum torque rating of the operators? Could this affect operability?

The maximum torque developed by the valve during dynamic flow conditions developed as a result of a LOCA condition does not exceed the maximum torque rating of the valve operator.

12. Describe the tests and/or analysis performed to establish the qualification of the valve to perform its intended function under the environmental conditions exposed to during and after the DBA following its long term exposure to the normal plant environment.

Long term operability of the Containment Vent and Purge Valves is assured by the integrated leak rate test as described in Section 4.4 of the Kewaunee Technical Specifications and individual leak rate tests as described in the same section.

13. What basis is used to establish the qualification of the valve, operators, solenoids, valves? How was the valve assembly (valve/operators) seismically qualified (test, analysis, etc.)?

The basis used to seismically qualify the vent and purge valves is described in the report from Henry Pratt Co. dated June 25, 1980. Pages concerning seismic analysis are included as an attachment. The solenoid valves were replaced with fully qualified solenoid valves as a result of work performed under the requirements of IE Bulletin 79-01B.

Nuclear Purge Valve Stress Analysis

INTRODUCTION

Described briefly in the following pages is the analysis used in verifying the structural adequacy of the main elements of the butterfly valve. Each element is described separately in its own, appropriately titled section.

Seismic loads were made an integral part of the analysis by the inclusion of the acceleration constants g_x, g_y, g_z. Should they not be present in any of the directions of interest, simply set the appropriate value of g_i to zero.

The symbols g_x, g_y, and g_z represent accelerations in the x, y, and z directions respectively. These directions are defined with respect to the valve body centered coordinate system illustrated in the figure 1. Specifically x is along the pipe axis. z is along the shaft axis. y is perpendicular to x & z and in the direction forming a right hand triad with them.

Valve orientation with respect to gravity is taken into account by adding the appropriate quantity to the seismic loads. The justification for doing this is that a gravitational load is completely equivalent to a 1 "g" seismic load.

As an example of including gravitational loads, consider a valve oriented so that z is vertical and subjected to seismic loads G_x, G_y, and G_z. The appropriate values for g_x, g_y, and g_z would be:

$$g_x = G_x$$

$$g_y = G_y$$

$$g_z = 1 + G_z$$

Throughout the analysis, reference is made to a "banjo" assembly. This is the assembly consisting of the disc, the stub shafts, the hub blocks, and the mounting hardware. It is termed a "banjo" assembly simply because it resembles a banjo in appearance, and this is an easy way to refer to it. The main elements of the banjo assembly are identified in figure 2.

FIGURE 1

VALVE BODY CENTERED
COORDINATE SYSTEM

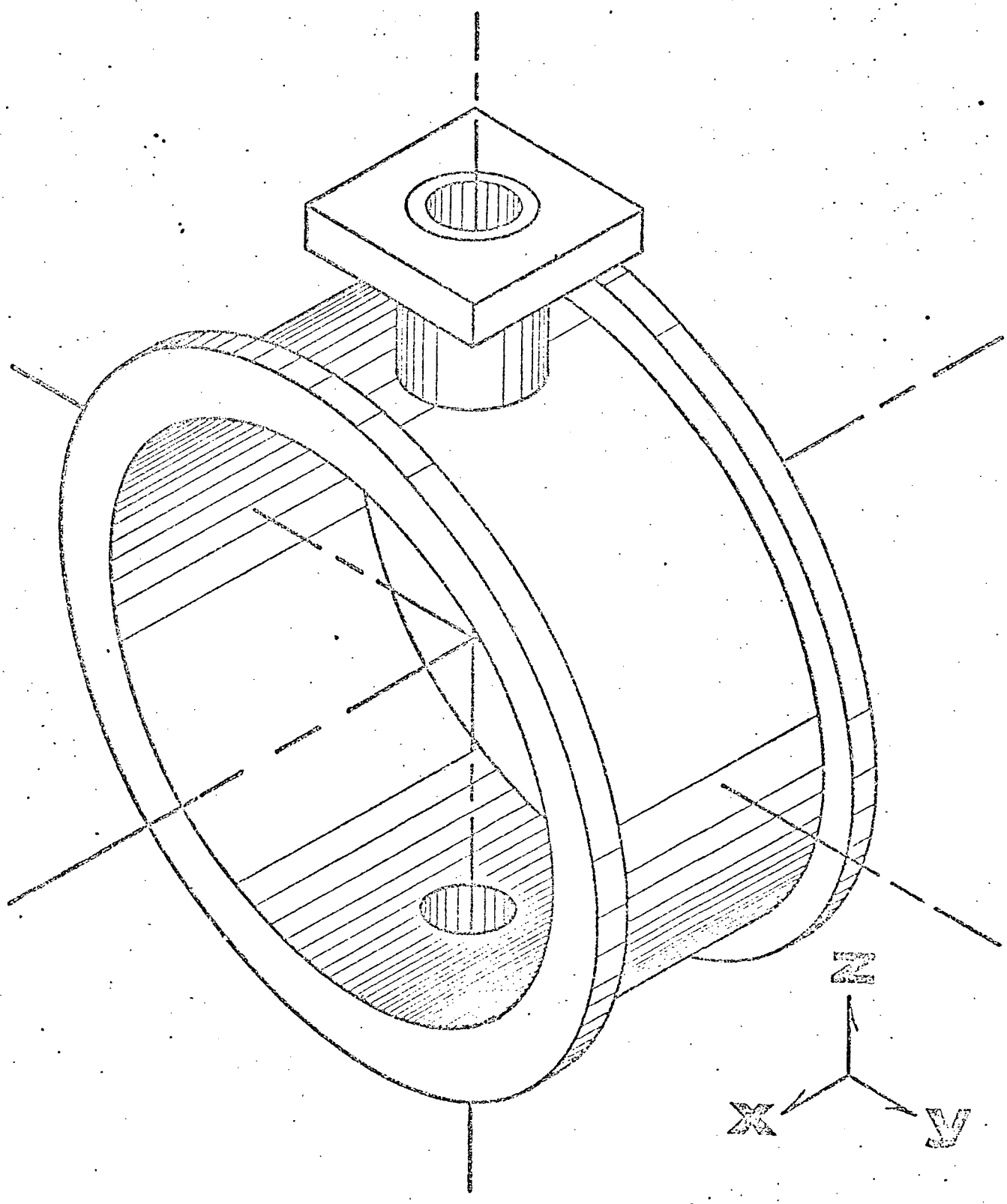

HH-4-71

FIGURE 2 - ESSENTIAL FEATURES OF BANJO ASSEMBLY

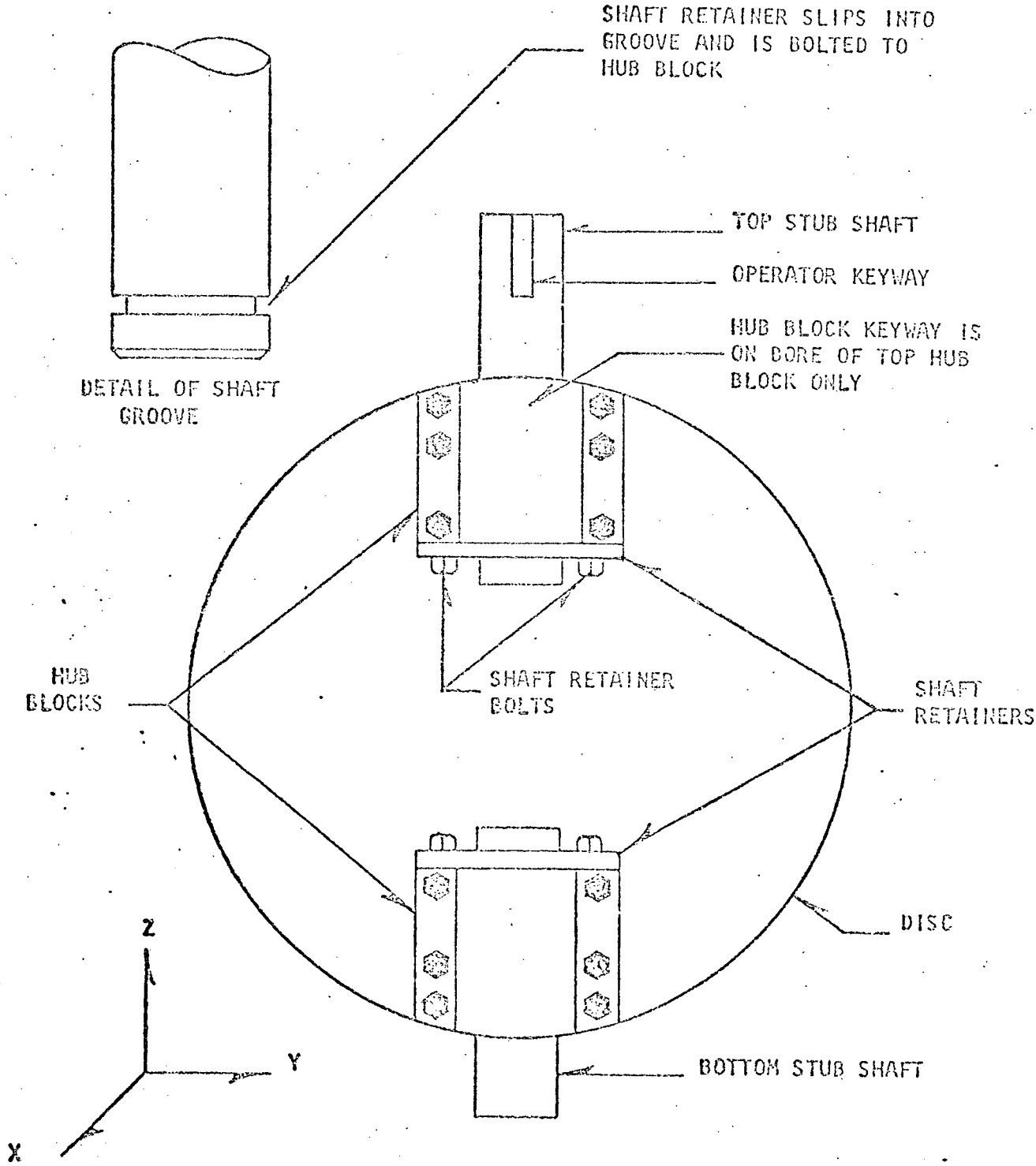

JH 5-71

FLANGE ANALYSIS

The flange analysis is in accordance with Appendix II, Para. VA-56 of Section VIII, Division I, of the ASME Codes for Pressure Vessels and AWWA C-207.

BODY ANALYSIS

The body analysis consists of calculations in accordance with Article 4 of the "Draft ASME Code for Pumps and Valves for Nuclear Power" dated Nov., 1968 and the March, 1970 Addendum plus one additional calculation. This additional calculation was included in order to take into account the effect of seismic loads on body principle stress levels. The specific formulas used in analyzing the body are detailed below. Note that the nomenclature on all code specified calculations is identical to that used in Article 4 of the code.

1. Primary membrane stress - Sub-article 452.3 of the pump and valve code specifies the most highly stressed portion of the body under internal pressure as being at the neck to flow passage junction. It also states rules for calculating the primary membrane stresses in this region based on projected areas of body metal and fluid. In a butterfly valve, this region corresponds to the junction of the trunion with the body shell. If the code rules are applied in this area, the resulting value is considerably less than if a section of body not containing the trunion were considered. For such a body section, $A_f/A_m < R_m/h$; where A_f and A_m are respectively the projected area of fluid and metal as specified in the code. R_m and h are defined below.

   The specific formula used to calculate primary membrane stress was:

   $$P_m = (R_m/h + 1/2)\ p$$

   where: R_m = shell mean radius-inches
   p = internal pressure-psig
   h = shell thickness-inches

2. Primary plus secondary stress due to internal pressure - This stress is calculated using the formula specified in paragraph 452.4a of the Pump and Valve Code. The formula is:

   $$Q_p = C_p\ (r_i/t_e + .5)\ p$$

   where: C_p = 3
   p = internal pressure-psig
   t_e = body wall thickness-in.
   r_i = inner radius of body-in.

3. Secondary stresses due to pipe reaction - These are calculated using the equations of section 452.4B of the Pump and Valve code. More specifically, these are:

$$Ped = \frac{F_d S}{G_d}$$

$$Peb = \frac{C_b F_b S}{G_b}$$

$$Pet = \frac{2F_b S}{G_t}$$

where: Ped = direct, or axial, load effect-psi
Peb = bending load effect-psi
Pet = torsional load effect-psi
F_b = bending modulus of standard connected pipe per figures 452.4b of pump and valve code-inches
F_d = 1/2 the cross sectional area of standard connected pipe-inches^2
C_b = stress index for body bending secondary stress per section 452.4b
S = 30,000 per section 452.4b
G_d = valve body section area-inches^2
G_t = valve body section torsional modulus-inches^3
G_b = valve body section bending modulus-inches^3

4. Thermal Secondary Stress - This stress is calculated per section 452.4c of the Pump and Valve code. More specifically, the formulas used were:

$QT = 375\ h^2$ for austenetic steel

$QT = 120\ h^2$ for ferritic steel

where: QT = thermal secondary stress
h = thickness of valve body

5. Combined Stress Intensity - This quantity, as specified in section 452.4 of the Pump and Valve code is given by the formula:

$$Sn = Qp + Pe + 2Q_T$$

where: Sn = combined stress intensity
Qp is given under number 2, above.
Q_T is given under number 4, above.
Pe is the largest of Ped, Peb, Pet as given in number 3, above.

6. Fatigue Stresses - The value taken for comparison with figures 452.5 (a) and 452.5 (b) of the Pump and Valve code is the larger of the following, as given in section 452.5:

$$S_{p1} = 2Qp/3 + Peb/2 + 1.3\ Q_T$$

$$S_{p2} = .4Q_p + Peb$$

where all terms are as previously defined

7. Valve body primary plus secondary stresses due to internal pressure, flange moments, and inertial loads - This is the extra, non-codified, body stress calculation. Principle stresses resulting from combined loads of internal pressure, flange moments, and seismic accelerations are calculated at two sections of the body. The sections are where the flange joins the body and at the centerline of the valve shaft. The larger of the calculated values is then taken as Sa. The formula used for calculating the stress is the result of an analysis where the valve body was considered to be a ring stiffened shell subjected to the above-mentioned loadings. Details of this analysis are not included here because of their length. However, the results are summarized in the following equations:

$$S_a = 1/2\ P + 1/2\ (Q_{p1} + Q_{p2}) + 1/2\ \sqrt{(Q_{p1} - Q_{p2})^2 + 4\ y^2}$$

where: Y = sum of shear stresses due to inertia torques and inertia transverse shear-psi
Q_{p1} = axial stresses-psi
Q_{p2} = circumferential stresses-psi
P = internal pressure-psig

The quantities, Y, Q_{p1}, and Q_{p2} are calculated from the following formulas:

$$Y = \frac{2WRo}{\pi\ (Ro^4 - Ri^4)} \left[E_c\ g_x + L\ (g_y^2 + g_z^2)^{1/2} \right]$$

$$Q_{p1} = PRm/2h + 6M/h^2 + \frac{W}{\pi}\ \frac{RoL\ (g^2_y + g^2_z)^{1/2}}{Ro^4 - Ri^4} + \frac{gx}{2Rmh}$$

$$Q_{p2} = PRm/h + 6\nu\ M/h^2 - wE/Rm$$

where: P = internal pressure-psig
W = valve weight-pounds
Ro = outside radius of valve body-inches
Ri = inside radius of valve body-inches
L = valve length-inches
E_c = valve body eccentricity-inches
Rm = mean radius of valve body-inches
h = valve body thickness-inches
E = young's modulus-psi
ν = poisson's ratio
g_x, g_y, g_z = acceleration constants
w = deflection of valve body-inches
M = local bending moment per unit circumference-pounds

Note: W and M are calculated in a separate analysis, the details of which are not included here.

TRUNION WELDMENT ASSEMBLY

For convenience in discussion, the trunion weldment assembly is considered to consist of the top trunion plate, the top trunion, the welds, and the body material immediately adjacent to the trunion. Figure 3 illustrates the elements of the assembly and defines some of the nomenclature used in the analysis.

Each element of the assembly was analyzed, and the results of the analyses are briefly described below. Note that the trunion stresses are defined in terms of applied forces Fx, Fy, and Fz and applied moments Mx, My, and Mz. These are the forces and moments which are experienced on the top surface of the trunion plate as a result of operator extended mass and seismic accelerations. Figure 4 defines these forces and the geometry of the operator extended mass with respect to the valve.

1. Combined shear stress in trunion plate welds - The most severe loading in the top trunion plate occurs in the weld region and is the result of combined torsional plus seismic loads. The combined shear stress in the weld can be calculated using the following equations.

$$\sigma = (\tau^2 + \sigma_s^2)^{1/2}$$

where: $\tau = M_z / \pi O^2 F$

$\sigma_s = SMO/2FI + F_z/2\pi OF$

$M = (M^2_x + M^2_y)^{1/2}$

I = area moment of inertia of trunion-in^4

τ = torsional shear stress-Pd/in^2

σ_s = shear stress-Pd/in^2

F_z is defined in figure 4

Mx, My, Mz are defined in figure 4

S, O, F are defined in figure 3

FIGURE 3

TOP TRUNION ASSEMBLY

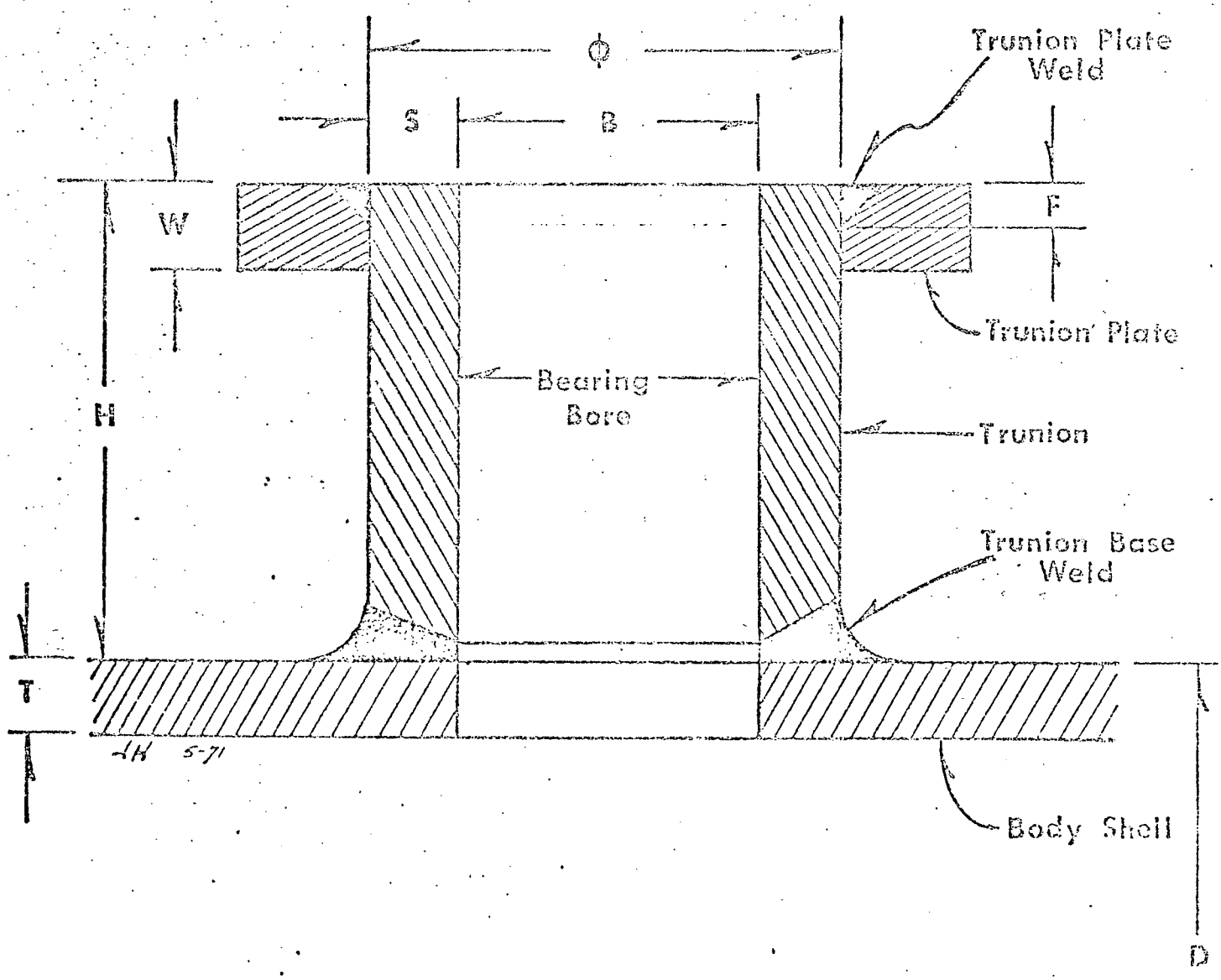

FIGURE 4

FORCES AND GEOMETRY OF TRUNION LOADING

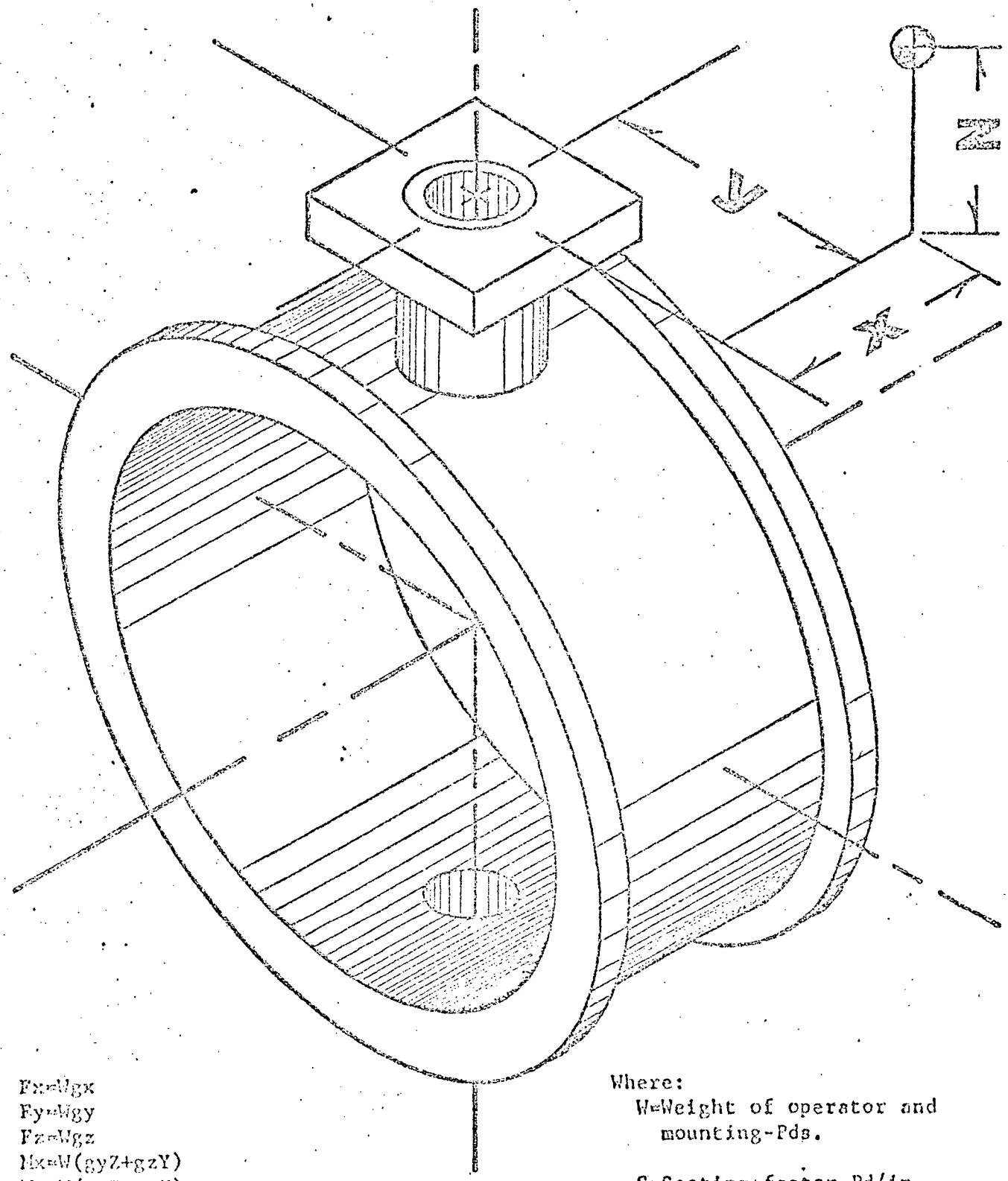

$F_x = Wg_x$
$F_y = Wg_y$
$F_z = Wg_z$
$M_x = W(g_yZ + g_zY)$
$M_y = W(g_xZ + g_zX)$
$M_z = W(g_yX + g_xY) + SD^2$

Where:

W=Weight of operator and mounting-Pds.

S=Seating factor-Pd/in.

D=Valve diameter-inches.

g_x, g_y, g_z=Seismic acceleration constants.

2. Combined equivalent tensile stress in trunion - The most severe trunion loading occurs at the base of the trunion and is the result of combined torsional plus seismic loads. In this area, the highest level of equivalent tensile stress can be calculated using the following formulas:

$$\sigma_E = (\sigma_T^2 + 4\sigma_S^2)^{1/2}$$

where: $\sigma_S = \frac{M_Z O}{4I}$

$$\sigma_T = \frac{MO}{2I} + \frac{F_Z}{(.785)(O^2-B^2)}$$

$$M = \left[(M_x + F_y H)^2 + (M_y + F_x H)^2\right]^{1/2}$$

I = area moment of inertia of trunion-in^4
Fx,Fy,Fz are defined in Figure 4
Mx,My,Mz are defined in Figure 4
H,O,B are defined in Figure 3

3. Stress in trunion base weld - The trunion base weld is a high quality, full penetration weld which is accomplished by use of a backing strip which is subsequently machined off. Joint efficiency is, therefore, considered to be 100%, and the results of the previous calculation apply here also.

4. Local bending stress in body - The failure mode of prime concern in the valve body due to trunion loading is local bending. The site of most severe local bending is at the base of the trunion. Bending stress in this region was approximated by considering the moment, M, as defined in calculation no. 2 above to be resisted across a section of body shell of width equal to the trunion outside diameter. This is equivalent to considering the moment as being applied at mid-point to a rectangular strip of width "O" and thickness "T". The formula for calculating this stress is:

$$\sigma_B = \frac{6M}{OT^2}$$

where: M is defined in calculation no. 2, above.
O and T are defined in Figure 3.

The actual stresses experienced in the valve body should be well below the value calculated using the above formula.

DISC ANALYSIS

For an air purge valve, the worst load combination which occurs on the disc is combined pressure plus seismic loads. Since the disc is simply a flat plate, the seismic loading will be uniformly distributed over the surface area of the disc. This is equivalent to a hydrostatic type pressure load. Therefore, the effect of seismic loading is included in the analysis by the addition of an "equivalent seismic pressure", Pe.

The highest stresses are present at the center of the disc and can be considered as being the result of simultaneous bending about two perpendicular axes, the y axis and the z axis. The specific formula for calculating this stress is given below:

$$\sigma = \frac{(P + P_e)\, d}{t} \left[36 \quad (.125\pi\, a + .113d)^2 + \frac{d^2}{4} \right]^{1/2}$$

where:
- Pe = equivalent seismic pressure = wtgx - psi
- w = weight density of disc - Pd/in^3
- t = thickness of disc - inches
- gx = acceleration constant
- P = applied pressure - psig
- d = diameter of disc - inches
- a = unsupported shaft length - inches

It usually occurs, however, that disc thickness is dictated by deflection requirements and that disc stresses are well below code allowable levels. Similar to the stress calculation, maximum disc deflection is calculated by considering simultaneous bending about the y and z axes. Seismic loads are included by the addition of an equivalent seismic pressure to the hydrostatic pressure. Maximum disc deflection is kept below a limit which the valve is designed to be able to accommodate while maintaining bubble tightness.

SHAFT ANALYSIS

Because of the manner in which the purge valve is used, fluid dynamic loadings can be neglected. Therefore, the worst loading condition on the shaft will be either a combination of torsional plus seismic loads or a combination of pressure plus seismic loads. Both of these conditions were checked using the formulas listed below. Columnar tensile and compressive loads on the shaft were not considered because of their obviously small effect on stress levels.

1. Shaft Stress due to torsion plus seismic loads.

$$\sigma = \frac{1}{2}\sigma_B + \frac{1}{2}\left[\sigma_B^2 + 4\sigma_T^2\right]^{1/2}$$

where: σ_B = bending stress = $\frac{16W(gx^2 + gy^2)^{1/2}a}{\pi d^3}$

σ_T = torsional stress = $\frac{16}{\pi d^3} \times T_S$

W = weight of banjo assy. - Pds.
a = unsupported shaft length - inches

d = shaft diameter - inches
gx, gy = acceleration constants
T_S = MAX. TORQUE (≈ 125 GOO INLBS)

2. Shaft Stresses due to pressure plus seismic loads - Both shear and bending stresses are calculated. However, they are not combined since their maxima occur at different locations on the cross section.

$$\sigma_S = \frac{2}{3A}\left[(\pi D^2 P/4 + Wg_x)^2 + (Wg_y)^2\right]^{1/2}$$

$$\sigma_B = \left[\sigma_x^2 + \sigma_y^2\right]^{1/2}$$

where: $\sigma_x = \frac{32(.125\,\pi D^2 P + .5\,Wg_x)a}{\pi d^3}$

$$\sigma_y = \frac{16Wg_y a}{\pi d^3}$$

A = cross sectional area of shaft - in^2
P = applied pressure - psig
D = disc diameter - inches
d = shaft diameter - inches
W = weight of banjo - pounds
a = unsupported shaft length - inches
gx, gy = acceleration constants

SHAFT RETAINER ASSEMBLY

For purposes of convenience in description, the shaft retainer assembly is considered to consist of the shaft retainer, the shaft retainer bolts, and the grooved end of the stub shaft. The shaft retainer was checked for shear tear out and bearing stresses. The shaft retainer bolts were checked for tensile stresses assuming all four retainer bolts to be equally loaded. The grooved end of the shaft was checked for shear tear out and bearing stress. Formulas for calculating each of these stresses are listed below:

1. Shear stress in retainer

$$\sigma_{Sr} = \frac{2Wg_z}{\pi d t}$$

2. Bearing stress on retainer and groove

$$\sigma_B = \frac{8Wg_z}{\pi (d^2 - dr^2)}$$

3. Tensile stress in retainer bolts

$$\sigma_T = \frac{Wg_z}{4A}$$

4. Shear tear out of shaft groove

$$\sigma_{SS} = \frac{2Wg_z}{\pi d_r L}$$

where:
- W = weight of banjo - pounds
- d = shaft diameter - inches
- dr = diameter of retainer bore - inches
- t = shaft retainer thickness - inches
- A = tensile area of retainer bolts - in^2
- L = length of shaft after groove - inches
- g_z = acceleration constant

HUB BLOCK ASSEMBLY

The hub block assembly is considered to consist of the hub block, the hub block retaining bolts, and the hub block keyway. The two stresses of primary concern in the hub block assembly are the keyway stresses and the combined tensile plus shear stresses in the hub block bolts. The analysis of each of these is explained below.

1. Hub Block Keyway - The hub block keyway can be safely designed by keeping the compressive bearing stress on the keyway face below the allowable stress level for the hub block material. The bearing stress is calculated using the following formula:

$$\sigma_B = \frac{4}{dKL} \times T_B$$

where:

d = shaft diameter - inches
K = key height - inches
L = key length - inches
T_B = MAX. TORQUE

2. Hub Block Bolt Stress - The hub block bolts are sized and located such that the maximum combined shear plus tensile stress does not exceed the code allowable value for the bolting material. Stresses are combined in accordance with the formula:

$$\sigma = \left[\sigma_t^2 + 4\sigma_s^2\right]^{1/2}$$

where: σ = combined stress level
σ_t = tensile stress
σ_s = shear stress

Combined stresses are calculated for both the top and bottom hub blocks. The reason for this is simply that the hub blocks experienced different loadings. The worst load combination for the top hub block is combined torsion, plus pressure, plus seismic loads with no seismic load in the z direction. The worst load combination for the lower hub block is combined pressure plus seismic loads.

For the top hub block:

$$\sigma_s = \frac{Wg_y}{9A_t}$$

$$\sigma_T = \frac{1}{A_t}\left\{\left[\frac{\gamma D^2 P}{8} + \frac{Wg_x}{2}\right]\left[\frac{1}{6} + \frac{(U+E)C}{2(A^2+B^2+C^2)}\right] + \left[\frac{Wg_y F}{6} + \frac{KD^2}{3}\right]\left[\frac{G+H}{G^2+(G+H)^2}\right]\right\}$$

For the bottom hub block:

$$\sigma_s = \frac{W}{9A_T}\left(g^2{}_y + 4g^2{}_z\right)^{1/2}$$

$$\sigma_T = \frac{1}{A_t}\left\{\left[\frac{\gamma D^2 P}{8} + \frac{Wg_x}{2}\right]\left[\frac{1}{6} + \frac{(U+E)C}{2(A^2+B^2+C^2)}\right] + \frac{Wg_y F(G+H)}{6\left[G^2+(G+H)^2\right]} + \frac{Wg_z FC}{2(A^2+B^2+C^2)}\right\}$$

where: A_t = bolt tensile area - in^2
D = disc diameter - inches
P = applied pressure - psig
W = banjo weight - pounds
gx, gy, gz = acceleration constants
U = unsupported shaft length - inches
K = seating factor - Pd/in
A, B, C, E, F, G, H = distances as defined in figure 5 - inches

FIGURE 5

HUB BLOCK
DIMENSIONS

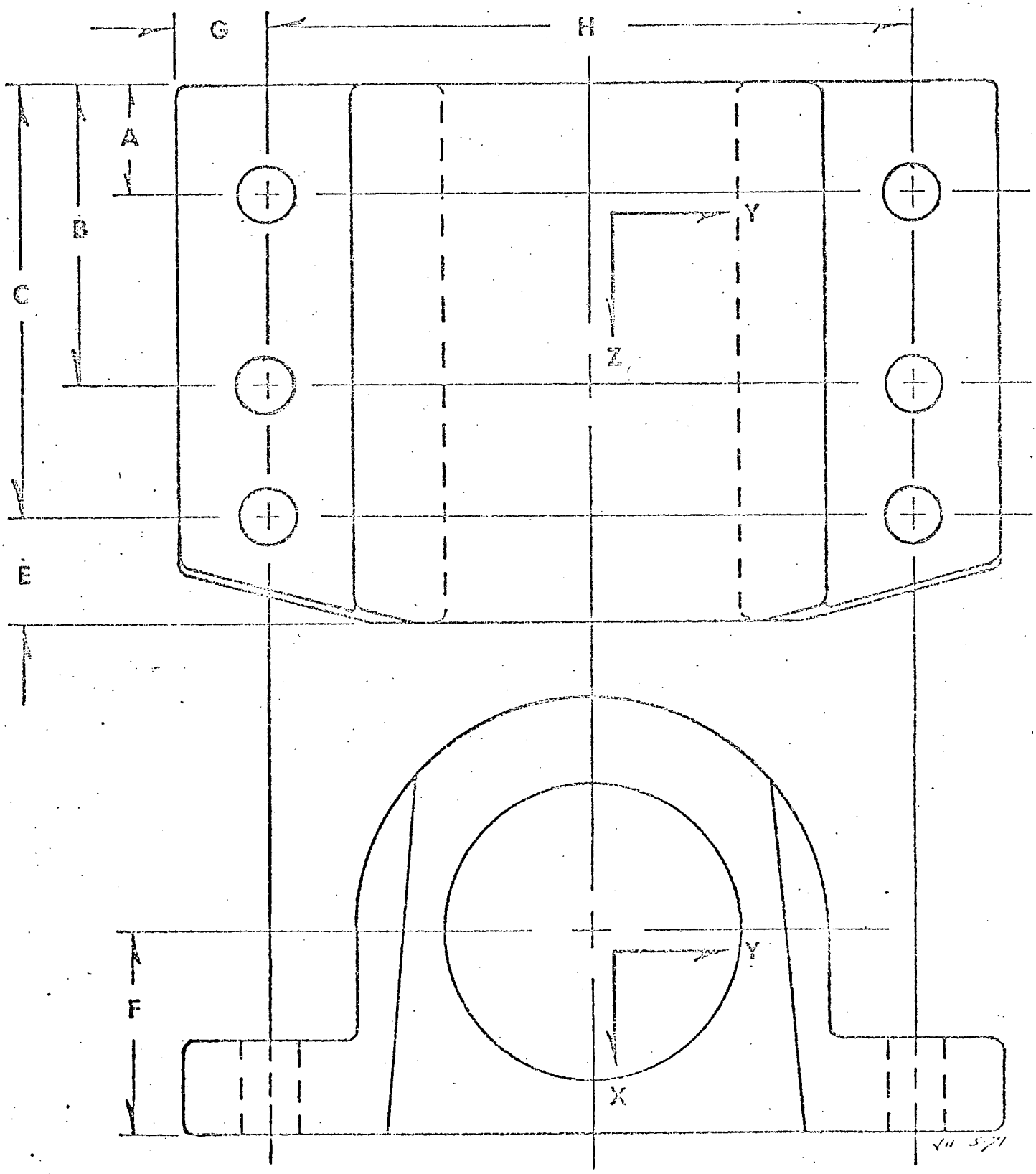

THRUST BEARING ASSEMBLY

The thrust bearing assembly provides restraint in the z direction for the banjo assembly, thus assuring the disc edge remains correctly positioned to maintain sealing capability. Structural adequacy of the assembly was checked using the six formulas listed below. Specific elements of the thrust bearing as referred to below are identified in figure 6.

1. Normal bearing stress on thrust washer.

$$\sigma_{bn} = \frac{W}{A_1}$$

2. Seismic bearing stress on thrust washer.

$$\sigma_{bs} = \frac{g_z W}{A_1}$$

3. Shear stress in adjusting screw head.

$$\sigma_{sn} = \frac{g_z W}{\pi D t}$$

4. Tensile stress in adjusting screw.

$$\sigma_{ta} = \frac{g_z W}{A_2}$$

5. Shear stresses in cover.

$$\sigma_{sc} = \frac{g_z W}{.9 \ \pi D T}$$

6. Tensile stress in retaining screws.

$$\sigma_{tr} = \frac{g_z W}{4 A_3}$$

where: W = banjo weight - pounds
A_1 = bearing area of thrust washer - in^2
g_z = acceleration constant
D = diameter of adjusting screw - inches
t = thickness of adjusting screw head - inches
A_2 = tensile area of adjusting screw - $in.^2$
T = cover thickness - inches
A_3 = tensile area of retaining screws - $in.^2$