Enclosure 3 to TN E-30938

TN-LC Transportation Package
Safety Analysis Report, Revision 0,
Document No. TN-LC-0100
(Non-proprietary, Public version)

NON-PROPRIETARY

AREVA

TRANSNUCLEAR, INC.

TN-LC
TRANSPORTATION PACKAGE

SAFETY ANALYSIS REPORT

Revision 0
May 2011

7135 Minstrel Way, Suite 300 • Columbia, MD 21045

TABLE OF CONTENTS

TABLE OF CONTENTS i
DEFINITIONS xii
Chapter 1 General Information 1-1
1.1 Introduction 1-1
1.2 Package Description 1-2
1.2.1 Packaging 1-2
1.2.2 Contents 1-5
1.2.3 Special Requirements for Plutonium 1-6
1.2.4 Operational Features 1-6
1.3 References 1-7
1.4 Appendices 1-8
1.4.1 Drawings of TN-LC Packaging and TN-LC-NRUX, TN-LC-MTR, TN-LC-TRIGA, and TN-LC-1FA Baskets 1.4.1-1
1.4.2 TN-LC-NRUX Basket 1.4.2-1
1.4.2.1 TN-LC-NRUX Basket Description 1.4.2-1
1.4.2.2 TN-LC-NRUX Basket Contents 1.4.2-2
1.4.2.3 References 1.4.2-3
1.4.3 TN-LC-MTR Basket 1.4.3-1
1.4.3.1 TN-LC-MTR Basket Description 1.4.3-1
1.4.3.2 TN-LC-MTR Basket Contents 1.4.3-2
1.4.3.3 References 1.4.3-3
1.4.4 TN-LC-TRIGA Basket 1.4.4-1
1.4.4.1 TN-LC-TRIGA Basket Description 1.4.4-1
1.4.4.2 TN-LC-TRIGA Basket Contents 1.4.4-2
1.4.4.3 References 1.4.4-3
1.4.5 TN-LC-1FA Basket 1.4.5-1
1.4.5.1 TN-LC-1FA Basket Description 1.4.5-1
1.4.5.2 TN-LC-1FA Basket Contents 1.4.5-2
1.4.5.3 References 1.4.5-4

Chapter 2 TN-LC Transport Package Structural Evaluation 2-1
2.1 Structural Design 2-1
2.1.1 Discussion 2-1
2.1.2 Design Criteria 2-5
2.1.3 Weights and Centers of Gravity 2-8
2.1.4 Identification of Codes and Standards for Package Design 2-8
2.2 Materials 2-9
2.2.1 Material Properties and Specifications 2-9
2.2.2 Chemical, Galvanic, or Other Reactions 2-9
2.2.3 Effects of Radiation on Materials 2-12
2.3 Fabrication and Examination 2-13
2.3.1 Fabrication 2-13
2.3.2 Examination 2-13
2.4 General Requirements for All Packages 2-14
2.4.1 Minimum Package Size 2-14
2.4.2 Tamper-Indicating Feature 2-14
2.4.3 Positive Closure 2-14
2.5 Lifting and Tie-Down Standards for All Packages 2-15
2.5.1 Lifting Devices 2-15
2.5.2 Tie-Down Devices 2-16
2.6 Normal Conditions of Transport 2-17
2.6.1 Heat 2-18
2.6.2 Cold 2-19
2.6.3 Reduced External Pressure 2-19
2.6.4 Increased External Pressure 2-20
2.6.5 Shock and Vibration 2-20
2.6.6 Water Spray 2-22
2.6.7 Free Drop 2-22
2.6.8 Corner Drop 2-23
2.6.9 Compression 2-23
2.6.10 Penetration 2-23
2.6.11 Fabrication Stresses 2-23
2.6.12 Lid Bolt and Bottom Plug Bolts 2-23
2.6.13 Fatigue Analysis of the Containment Boundary 2-24
2.6.14 Summary of Normal Condition Cask Body Structural Analysis 2-24
2.6.15 Structural Evaluation of the Cask Baskets under Normal Condition Loads 2-25

2.7 Hypothetical Accident Conditions 2-26
2.7.1 Free Drop 2-26
2.7.2 Crush 2-29
2.7.3 Puncture 2-29
2.7.4 Thermal 2-30
2.7.5 Immersion–Fissile Material 2-31
2.7.6 Immersion–All Packages 2-31
2.7.7 Deep Water Immersion Test 2-31
2.7.8 Summary of Damage 2-31
2.8 Accident Conditions for Air Transport of Plutonium 2-33
2.9 Accident Conditions for Fissile Material Packages for Air Transport 2-34
2.10 Special Form 2-35
2.11 Fuel Rods 2-36
2.12 References 2-37
2.13 Appendices 2-39
2.13.1 TN-LC Cask Body Structural Evaluation 2.13.1-1
2.13.1.1 Introduction 2.13.1-1
2.13.1.2 Description of the TN-LC Cask 2.13.1-2
2.13.1.3 Boundary Conditions 2.13.1-11
2.13.1.4 Load Cases and Load Combinations 2.13.1-12
2.13.1.5 NCT Loads Structural Evaluations 2.13.1-16
2.13.1.6 HAC Loads Structural Evaluations 2.13.1-19
2.13.1.7 NCT Stress Evaluation 2.13.1-23
2.13.1.8 HAC Stress Evaluation 2.13.1-26
2.13.1.9 Stress Classification Paths 2.13.1-29
2.13.1.10 Stress Linearization Method 2.13.1-30
2.13.1.11 References 2.13.1-31
2.13.2 TN-LC Cask Lid and Bottom Plug Closure Bolt Analyses 2.13.2-1
2.13.2.1 Purpose 2.13.2-1
2.13.2.2 Lid Bolt Load Calculations 2.13.2-3
2.13.2.3 Lid Bolt Load Combinations 2.13.2-7
2.13.2.4 Lid Bolt Stress Calculations 2.13.2-9
2.13.2.5 Lid Bolt Results 2.13.2-12
2.13.2.6 Lid Bolt Fatigue Analysis 2.13.2-13
2.13.2.7 Bottom Plug Bolt Fatigue Analysis 2.13.2-15
2.13.2.8 Minimum Engagement Length for Bolt and Flange 2.13.2-16
2.13.2.9 Bottom Plug Bolt Analysis 2.13.2-18
2.13.2.10 Conclusions 2.13.2-30

2.13.2.11 References 2.13.2-31
2.13.3 TN-LC Cask Lead Slump and Containment Boundary Buckling Analysis 2.13.3-1
2.13.3.1 Introduction 2.13.3-1
2.13.3.2 Finite Element Model 2.13.3-2
2.13.3.3 Material Properties 2.13.3-3
2.13.3.4 Loading and Boundary Conditions 2.13.3-4
2.13.3.5 FEA Results 2.13.3-5
2.13.3.6 Conclusions 2.13.3-6
2.13.3.7 References 2.13.3-7
2.13.4 TN-LC Structural Analysis of the Neutron Shield Shell 2.13.4-1
2.13.4.1 Introduction 2.13.4-1
2.13.4.2 Description 2.13.4-2
2.13.4.3 Materials Properties and Stress Criteria 2.13.4-3
2.13.4.4 Finite Element Model Description 2.13.4-4
2.13.4.5 Applied Load 2.13.4-5
2.13.4.6 Analysis Results 2.13.4-6
2.13.4.7 Summary of Results 2.13.4-8
2.13.4.8 References 2.13.4-9
2.13.5 TN-LC Cask Lifting and Tie-Down Devices Structural Evaluation 2.13.5-1
2.13.5.1 Purpose 2.13.5-1
2.13.5.2 Analysis 2.13.5-2
2.13.5.3 Results 2.13.5-12
2.13.5.4 Conclusions 2.13.5-13
2.13.5.5 References 2.13.5-14
2.13.6 TN-LC Cask Containment Boundary Fatigue Evaluation 2.13.6-1
2.13.6.1 Purpose 2.13.6-1
2.13.6.2 Assumptions 2.13.6-2
2.13.6.3 Calculations 2.13.6-3
2.13.6.4 Conclusions 2.13.6-6
2.13.6.5 References 2.13.6-7
2.13.7 TN-LC Lid Closure Evaluation Due to Delayed Impact 2.13.7-1
2.13.7.1 Introduction 2.13.7-1
2.13.7.2 Finite Element Model 2.13.7-2
2.13.7.3 Boundary and Initial Conditions 2.13.7-4
2.13.7.4 Results 2.13.7-5
2.13.7.5 Sensitivity Studies 2.13.7-7
2.13.7.6 Conclusion 2.13.7-8
2.13.7.7 References 2.13.7-9

2.13.8 TN-LC Basket Structural Evaluation 2.13.8-1
2.13.8.1 Introduction 2.13.8-1
2.13.8.2 Approach 2.13.8-2
2.13.8.3 Loading 2.13.8-3
2.13.8.4 Design Criteria 2.13.8-4
2.13.8.5 TN-LC-1FA Baskets 2.13.8-5
2.13.8.6 TN-LC-MTR Basket 2.13.8-17
2.13.8.7 TN-LC-TRIGA Basket 2.13.8-25
2.13.8.8 TN-LC-NRUX Basket 2.13.8-30
2.13.8.9 References 2.13.8-43
2.13.9 TN-LC Basket Dynamic Load Factor Determination 2.13.9-1
2.13.9.1 Introduction 2.13.9-1
2.13.9.2 Natural Frequencies during End Drop 2.13.9-2
2.13.9.3 Basket Side Drop ANSYS Analysis 2.13.9-3
2.13.9.4 Summary of Results and Conclusion 2.13.9-7
2.13.9.5 References 2.13.9-8
2.13.10 TN-LC Transport Package Thermal Expansion Evaluation 2.13.10-1
2.13.10.1 Purpose 2.13.10-1
2.13.10.2 Methodology 2.13.10-2
2.13.10.3 Results and Conclusions 2.13.10-10
2.13.10.4 References 2.13.10-11
2.13.11 TN-LC Fuel Assemblies and Fuel Elements under Impact Loads 2.13.11-1

Proprietary Information Withheld Pursuant to 10 CFR 2.390

2.13.11.2 MTR and TRIGA Fuel Element Evaluation 2.13.11-14
2.13.11.3 References 2.13.11-20
2.13.12 TN-LC Transport Package Impact Limiter Analysis using LS-DYNA 2.13.12-1
2.13.12.1 Description of Impact Limiters and Load Path 2.13.12-1
2.13.12.2 Analysis Approach 2.13.12-2
2.13.12.3 MP197 1/3 Scale LS-DYNA Benchmark Analysis 2.13.12-3
2.13.12.4 TN-LC Impact Limiter Analysis 2.13.12-5
2.13.12.5 Sensitivity Studies 2.13.12-11
2.13.12.6 Impact Limiter Bolt Evaluation 2.13.12-12
2.13.12.7 References 2.13.12-17
2.13.13 TN-LC Transport Cask and Basket ASME Code Alternatives 2.13.13-1
2.13.13.1 Introduction 2.13.13-1
2.13.13.2 References 2.13.13-2

Chapter 3 Thermal Evaluation 3-1
3.1 Description of Thermal Design Criteria 3-1
3.1.1 Design Features 3-3
3.1.2 Contents Decay Heat 3-5
3.1.3 Summary Tables of Temperatures 3-5
3.1.4 Summary Tables of Maximum Pressures 3-6
3.2 Material Properties and Component Specifications 3-7
3.2.1 Material Properties 3-7
3.2.2 Component Specifications 3-18
3.3 Thermal Evaluation under Normal Conditions of Transport 3-19
3.3.1 Thermal Models 3-19
3.3.2 Heat and Cold 3-33
3.3.3 Maximum Normal Operating Pressure 3-36
3.3.4 Thermal Evaluation for Loading/Unloading Operations 3-41
3.4 Thermal Evaluation under Hypothetical Accident Conditions 3-47
3.4.1 Initial Conditions 3-47
3.4.2 Fire Test Conditions 3-48
3.4.3 Maximum Temperatures and Pressure 3-52
3.4.4 Maximum Thermal Stresses 3-54
3.4.5 Accident Conditions for Fissile Material Packages for Air Transport 3-54
3.5 References 3-55
3.6 Appendices 3-57
3.6.1 Macros for Heat Transfer Coefficient 3-58
3.6.2 TN-LC Cask Mesh Sensitivity 3-64
3.6.3 Sensitivity Analysis for Material Properties 3-65
3.6.4 Mesh Sensitivity of Fuel Basket Models 3-66
3.6.5 Effective Properties for the Homogenized TN-LC-1FA Basket with PWR Fuel Assembly 3-69
3.6.6 Effective Thermal Properties of the PWR and BWR Fuel Assemblies 3-74
3.6.7 Bounding Transverse Fuel Effective Thermal Conductivity for UO_2, MOX, and EPR Irradiated Fuels 3-77
Chapter 4 Containment 4-1
4.1 Description of Containment System 4-1
4.1.1 Containment Boundary 4-1
4.2 Containment under Normal Conditions of Transport (Type B Packages) 4-4
4.2.1 Containment of Radioactive Material 4-4
4.2.2 Pressurization of Containment Vessel 4-4
4.2.3 Containment Criteria 4-4

4.3 Containment under Hypothetical Accident Conditions (Type B Packages) 4-5
4.3.1 Fission Gas Products 4-5
4.3.2 Containment of Radioactive Material 4-5
4.3.3 Containment Criterion 4-5
4.4 Special Requirements 4-6
4.5 References 4-7
Chapter 5 Shielding Evaluation 5-1
5.1 Description of the Shielding Design 5-1
5.1.1 Design Features 5-1
5.1.2 Summary Tables of Maximum Radiation Levels 5-1
5.2 Source Specification 5-3
5.2.1 Crud Evaluation for Shielding 5-3
5.3 Shielding Model 5-5
5.3.1 Configuration of Source and Shielding 5-5
5.3.2 Material properties 5-6
5.3.3 Notes on VYAL-B Mixing and Installation 5-7
5.4 Shielding Evaluation 5-9
5.4.1 Methods 5-9
5.4.2 Input and Output Data 5-9
5.4.3 Flux-to-Dose-Rate Conversion 5-9
5.4.4 External Radiation Levels 5-9
5.5 References 5-12
5.6 Appendices 5-13
5.6.1 TN-LC-MTR Basket Shielding Evaluation 5-6.1-1
5.6.1.1 Description of the Shielding Design 5.6.1-1
5.6.1.2 Source Specification 5.6.1-3
5.6.1.3 Shielding Model 5.6.1-7
5.6.1.4 Shielding Evaluation 5.6.1-9
5.6.1.5 Appendices 5.6.1-12
5.6.2 TN-LC-NRUX Basket Shielding Evaluation 5.6.2-1
5.6.2.1 Description of the Shielding Design 5.6.2-1
5.6.2.2 Source Specification 5.6.2-3
5.6.2.3 Shielding Model 5.6.2-5
5.6.2.4 Shielding Evaluation 5.6.2-6
5.6.2.5 Appendix 5.6.2-9
5.6.3 TN-LC-TRIGA Basket Shielding Evaluation 5.6.3-1
5.6.3.1 Description of the Shielding Design 5.6.3-1
5.6.3.2 Source Specification 5.6.3-3

5.6.3.3 Shielding Model 5.6.3-7
5.6.3.4 Shielding Evaluation 5.6.3-9
5.6.3.5 Appendices 5.6.3-12
5.6.4 TN-LC-1FA Basket Shielding Evaluation 5.6.4-1
5.6.4.1 Description of the Shielding Design 5.6.4-1
5.6.4.2 Source Specification 5.6.4-3
5.6.4.3 Shielding Model 5.6.4-10
5.6.4.4 Shielding Evaluation 5.6.4-13
5.6.4.5 Appendices 5.6.4-19
Chapter 6 Criticality Evaluation 6-1
6.1 Description of the Criticality Design 6-1
6.1.1 Design Features 6-1
6.1.2 Summary Table of Criticality Evaluation 6-1
6.1.3 Criticality Safety Index 6-2
6.2 Fissile Material Contents 6-3
6.3 General Considerations 6-4
6.3.1 Model Configuration 6-4
6.3.2 Material properties 6-4
6.3.3 Computer Codes and Cross Section Libraries 6-4
6.3.4 Demonstration of Maximum Reactivity 6-4
6.4 Single Package Evaluation 6-5
6.5 Evaluation of Package Arrays under Normal Conditions of Transport 6-6
6.6 Package Arrays under Hypothetical Accident Conditions 6-7
6.7 Fissile Material Packages for Air Transport 6-8
6.8 Benchmark Evaluations 6-9
6.9 References 6-10
6.10 Appendices 6-11
6.10.1 TN-LC-MTR Basket Criticality Evaluation 6.10.1-1
6.10.1.1 Description of the Criticality Design 6.10.1-1
6.10.1.2 Fissile Material Contents 6.10.1-3
6.10.1.3 General Considerations 6.10.1-5
6.10.1.4 Single Package Evaluation 6.10.1-9
6.10.1.5 Evaluation of Package Arrays under Normal Conditions of Transport 6.10.1-14
6.10.1.6 Package Arrays under Hypothetical Accident Conditions 6.10.1-16
6.10.1.7 Fissile Material Packages for Air Transport 6.10.1-17
6.10.1.8 Benchmark Evaluations 6.10.1-18
6.10.1.9 Appendix 6.10.1-22

6.10.2 TN-LC-NRUX Basket Criticality Evaluation 6.10.2-1
6.10.2.1 Description of the Criticality Design 6.10.2-1
6.10.2.2 Fissile Material Contents 6.10.2-3
6.10.2.3 General Considerations 6.10.2-4
6.10.2.4 Single Package Evaluation 6.10.2-7
6.10.2.5 Evaluation of Package Arrays under Normal Conditions of Transport 6.10.2-9
6.10.2.6 Package Arrays under Hypothetical Accident Conditions 6.10.2-10
6.10.2.7 Fissile Material Packages for Air Transport 6.10.2-11
6.10.2.8 Benchmark Evaluations 6.10.2-12
6.10.2.9 Appendix 6.10.2-15
6.10.3 TN-LC-TRIGA Basket Criticality Evaluation 6.10.3-1
6.10.3.1 Description of the Criticality Design 6.10.3-1
6.10.3.2 Fissile Material Contents 6.10.3-3
6.10.3.3 General Considerations 6.10.3-5
6.10.3.4 Single Package Evaluation 6.10.3-8
6.10.3.5 Evaluation of Package Arrays under Normal Conditions of Transport 6.10.3-10
6.10.3.6 Package Arrays under Hypothetical Accident Conditions 6.10.3-11
6.10.3.7 Fissile Material Packages for Air Transport 6.10.3-12
6.10.3.8 Benchmark Evaluations 6.10.3-13
6.10.3.9 Appendix 6.10.3-16
6.10.4 TN-LC-1FA Basket Criticality Evaluation 6.10.4-1
6.10.4.1 Description of the Criticality Design 6.10.4-1
6.10.4.2 Fissile Material Contents 6.10.4-4
6.10.4.3 General Considerations 6.10.4-5
6.10.4.4 Single Package Evaluation 6.10.4-11
6.10.4.5 Evaluation of Package Arrays under Normal Conditions of Transport 6.10.4-14
6.10.4.6 Package Arrays under Hypothetical Accident Conditions 6.10.4-15
6.10.4.7 Fissile Material Packages for Air Transport 6.10.4-16
6.10.4.8 Benchmark Evaluations 6.10.4-17
6.10.4.9 Appendix 6.10.4-19
Chapter 7 Package Options 7-1
7.1 TN-LC Package Loading 7-1
7.1.1 TN-LC Cask Preparation for Loading 7-1
7.1.2 TN-LC Cask Wet Loading 7-2
7.1.3 TN-LC Cask Dry Loading 7-4
7.1.4 TN-LC Cask Preparation for Transport 7-5

7.2 TN-LC Package Unloading 7-7
7.2.1 Receipt of Loaded TN-LC Package from Carrier 7-7
7.2.2 Removal of Contents from TN-LC Cask 7-8
7.3 Preparation of Empty Package for Transport 7-11
7.4 Other Operations 7-12
7.4.1 Assembly Verification Leakage Testing of the Containment Boundary 7-12
7.5 References 7-15
7.6 Glossary 7-16
7.7 Appendices 7-17
7.7.1 TN-LC-NRUX Basket Wet and Dry Loading and Unloading 7.7.1-1
7.7.1.1 TN-LC-NRUX Basket Wet Loading 7.7.1-1
7.7.1.2 TN-LC-NRUX Basket Dry Loading 7.7.1-3
7.7.1.3 TN-LC-NRUX Basket Wet Unloading 7.7.1-4
7.7.1.4 TN-LC-NRUX Basket Dry Unloading 7.7.1-5
7.7.2 TN-LC-MTR Basket Wet and Dry Loading and Unloading 7.7.2-1
7.7.2.1 TN-LC-MTR Basket Wet Loading 7.7.2-1
7.7.2.2 TN-LC-MTR Basket Dry Loading 7.7.2-3
7.7.2.3 TN-LC-MTR Basket Wet Unloading 7.7.2-4
7.7.2.4 TN-LC-MTR Basket Dry Unloading 7.7.2-5
7.7.3 TN-LC-TRIGA Basket Wet and Dry Loading and Unloading 7.7.3-1
7.7.3.1 TN-LC-TRIGA Basket Wet Loading 7.7.3-1
7.7.3.2 TN-LC-TRIGA Basket Dry Loading 7.7.3-3
7.7.3.3 TN-LC-TRIGA Basket Wet Unloading 7.7.3-4
7.7.3.4 TN-LC-TRIGA Basket Dry Unloading 7.7.3-5
7.7.4 TN-LC-1FA Wet and Dry Loading and Unloading 7.7.4-1
7.7.4.1 TN-LC-1FA Basket Wet Loading 7.7.4-1
7.7.4.2 TN-LC-1FA Basket Dry Loading 7.7.4-3
7.7.4.3 TN-LC-1FA Basket Wet Unloading 7.7.4-5
7.7.4.4 TN-LC-1FA Basket Dry Unloading 7.7.4-6
Chapter 8 Acceptance Tests and Maintenance Program 8-1
8.1 Acceptance Tests 8-1
8.1.1 Visual Inspection and Measurements 8-1
8.1.2 Weld Examinations 8-1
8.1.3 Structural and Pressure Tests 8-2
8.1.4 Containment Boundary Leakage Tests 8-2
8.1.5 TN-LC Cask Component and Material Tests 8-3
8.1.6 Shielding Tests 8-4
8.1.7 Neutron Absorber Tests 8-6

8.1.8 Thermal Tests 8-13
8.2 Maintenance Program 8-14
8.2.1 Structural and Pressure Tests 8-14
8.2.2 Leakage Tests 8-14
8.2.3 Component and Material Tests 8-14
8.2.4 Periodic Thermal Tests 8-15
8.2.5 Miscellaneous Tests 8-16
8.3 References 8-17

DEFINITIONS

Containment Boundary: The enclosure formed by the cask inner shell welded to the top and bottom flanges, the top closure lid and the bottom plug, their inner seals, and the vent and drain ports and seals.

Containment System: The assembly of containment components of the TN-LC packaging intended to retain the radioactive material during transport.

Criticality Safety Index (CSI): The dimensionless number (rounded up to the next tenth) assigned to and placed on the label of a fissile material package, to designate the degree of control of accumulation of packages containing fissile material during transportation.

Exclusive Use: The sole use by a single consignor of a conveyance for which all initial, intermediate, and final loading and unloading are carried out in accordance with the direction of the consignor or consignee. The consignor and the carrier must ensure that any loading or unloading is performed by personnel having radiological training and resources appropriate for safe handling of the consignment. The consignor must issue specific instructions, in writing, for maintenance of exclusive use shipment controls, and include them with the shipping paper information provided to the carrier by the consignor.

Fuel Basket: A cavity structure that can accept a fuel assembly of the type for which it is designed:

- TN-LC-NRUX: for transport of NRU and/or NRX fuel assemblies;
- TN-LC-MTR: for transport of MTR fuel assemblies;
- TN-LC-TRIGA: for transport of TRIGA fuel assemblies;
- TN-LC-1FA: for transport of BWR or PWR fuel assemblies, or of a 25-pin can.

Impact Limiters (IL): A set of fully enclosed energy absorbers that are attached to the top and bottom of the TN-LC cask during transport.

Maximum Normal Operating Pressure (MNOP): The maximum gauge pressure that would develop in the containment system in a period of 1 year under the heat condition specified in 10CFR71.71(c)(1), in the absence of venting, external cooling by an ancillary system, or operational controls during transport.

Minimum Enrichment: The minimum assembly average enrichment. Natural uranium blankets are not considered in determining minimum enrichment.

Neutron Absorber Material (Poison Plates): A generic term used in this SAR to indicate any neutron absorber material.

Neutron Shield: A material used to thermalize and capture neutrons emanating from the radioactive spent nuclear fuel.

SAR: An acronym of Safety Analysis Report.

TN-LC Transport Cask or TN-LC Cask: The device engineered to hold high level waste, including spent nuclear fuel, in a safe configuration.

TN-LC Packaging: The assembly of components necessary to ensure compliance with the packaging requirements of 10CFR Part 71. It may consist of one or more receptacles, absorbent materials, spacing structures, thermal insulation, radiation shielding, and devices for cooling or absorbing mechanical shocks. The vehicle, tie-down system, and auxiliary equipment may be designated as part of the packaging.

TN-LC Transport (Transportation) Package: The TN-LC packaging together with its radioactive contents as presented for transport.

Chapter 1
General Information

TABLE OF CONTENTS

1.1 Introduction 1-1
1.2 Package Description 1-2
1.2.1 Packaging 1-2
1.2.2 Contents 1-5
1.2.3 Special Requirements for Plutonium 1-6
1.2.4 Operational Features 1-6
1.3 References 1-7
1.4 Appendices 1-8
1.4.1 Drawings of TN-LC Packaging and TN-LC-NRUX, TN-LC-MTR, TN-LC-TRIGA, and TN-LC-1FA Baskets 1-8
1.4.2 TN-LC-NRUX Basket 1-8
1.4.3 TN-LC-MTR Basket 1-8
1.4.4 TN-LC-TRIGA Basket 1-8
1.4.5 TN-LC-1FA Basket 1-8

LIST OF TABLES

Table 1-1 Nominal Dimensions and Weights of the TN-LC Packaging 1-9
Table 1-2 Basket Configurations in the TN-LC Packaging 1-10

LIST OF FIGURES

Figure 1-1 General Arrangement of the TN-LC Packaging 1-11

Chapter 1
General Information

NOTE: References in this Chapter are shown as [1], [2], etc. and refer to the reference list in Section 1.3.

1.1 Introduction

This chapter presents a general introduction and description of the Transnuclear TN-LC transport package. This application seeks authorization of the TN-LC transport package as a B(U)F-96, category I, spent fuel transport packaging container in accordance with the provisions of Title 10, Part 71 of the Code of Federal Regulations [1]. This Safety Analysis Report (SAR) describes the design features and presents the safety analyses which demonstrate that the TN-LC transport package complies with applicable requirements of 10CFR71. The format and content of this document follow the guidelines of Regulatory Guide 7.9 [2].

The TN-LC packaging has been developed for exclusive- use transport of irradiated test, research, and commercial reactor fuel in a closed transport vehicle or an ISO container. The fuel is primarily of three basic types: highly enriched aluminum-uranium plate fuel, highly enriched aluminum-uranium pin fuel, and commercial light water reactor fuel assemblies and pins. Within the package, the fuel is contained in basket structures specifically designed for each fuel type that provide for suitable heat rejection and criticality control.

The packaging consists of a payload basket, a shielded cask body, a shielded closure lid, and top and bottom impact limiters. The packaging is of conventional design and utilizes ASME Type 304 and Type XM19 stainless steel as its primary structural materials. The packaging is designed to provide leak-tight containment of the radioactive contents under all normal conditions of transport (NCT) and hypothetical accident conditions (HAC).

The TN-LC packaging may be loaded or unloaded either in a spent fuel pool or a hot cell environment. The cask body is provided with a test/vent port and a drain port. The package is designed to be transported singly, with its longitudinal axis horizontal, by highway truck or by rail in exclusive use. The TN-LC transport package is 230 inches long and 66 inches in diameter.

Based on the criticality assessment provided in Chapter 6, Criticality Evaluation, the Criticality Safety Index for the TN-LC transport package is 100 in accordance with 10CFR71.59 [1].

Based on the shielding assessment provided in Chapter 5, Shielding Evaluation, per 10CFR71.47(b)(4), the TN-LC transport package shall be transported by private carrier, and personnel in occupied locations shall wear dosimetry devices (except the for the transport of the TN-LC-NRUX basket).

Transnuclear, Inc., has an NRC approved quality assurance program (Docket Number 71-0250) which satisfies the requirements of 10CFR71 Subpart H [1].

1.2 Package Description

This section presents a basic description of the TN-LC transport package components and construction. General arrangement drawings are provided in Appendix 1.4.1.

1.2.1 Packaging

The TN-LC packaging can be used to transport several types of Boiling Water Reactor (BWR), Pressurized Water Reactor (PWR), Mixed Oxide Fuel (MOX), and Evolutionary Pressurized Reactor (EPR) fuel assemblies and/or fuel pins. Additional payloads include National Research Universal Reactor (NRU), National Experimental Reactor (NRX), Material Test Reactor (MTR), and Training, Research and Isotope, General Atomics Reactor (TRIGA) fuel assemblies and fuel elements. The fuel is contained in specific baskets which fit into the TN-LC transport cask. The TN-LC transport package is limited to a maximum heat load of 3.0 kW depending on the fuel and basket being transported. Specific fuel and basket information is presented in Section 1.2.2.

The TN-LC packaging is shown in Figure 1-1 and consists of the following components:

- A TN-LC transport cask consists of a containment boundary, structural shell, gamma shielding material, and solid neutron shield. The transport cask cavity contains an inert gas atmosphere.
- One set of removable trunnions are bolted to plates which are welded to the outer shell of the cask. There are also two pocket trunnions in the bottom flange that are used for rotating the cask and may be used for horizontal cask lifting.
- Impact limiters consisting of balsa and redwood blocks encased in stainless steel shells are attached to each end of the TN-LC transport cask during shipment. Each impact limiter is held in place by eight attachment bolts.
- There are four TN-LC basket designs (TN-LC-NRUX, TN-LC-MTR, TN-LC-TRIGA, and TN-LC-1FA) with multiple fuel types and configurations for use with the TN-LC transport cask. Details for each basket type are provided in Appendices 1.4.2 through 1.4.5. The baskets are designed to drain water readily when loading occurs in a fuel pool. The basket assembly locates and supports the fuel assemblies/elements, transfers heat to the cask inner shell, and provides neutron absorption (with or without poison plates) to satisfy nuclear criticality requirements.
- As there are different basket heights (and combinations of stacked baskets), stainless steel or aluminum spacers are provided to limit axial movement of the payload.

1.2.1.1 TN-LC Cask Body

The TN-LC transport cask body is a right circular cylinder 197.5 inches long and 30 inches in diameter (not including the impact limiter attachments and the neutron shield). It is composed of top and bottom end flange forgings connected by inner and outer shells. Thick lead shielding is located between the two cylindrical shells, in the bottom end assembly, and in the lid. The

payload cavity has a diameter of 18 inches and a minimum length of 182.5 inches. The end flanges are made from ASME SA-182, Type FXM19 stainless steel forgings. The bottom end of the cask has a drain to allow removal of water from the payload cavity and bottom plug for cask operations. A test port with a sealing washer is provided for testing the cask bottom access port cover seal.

The inner and outer shells are made from ASME SA-240, Type XM19 plate. Except for the closure bolts, trunnions and impact limiter attachments, the package is of primarily welded construction, using austenitic stainless steel. The inner and outer shells each may have two or more full penetration longitudinal seam welds and may have circumferential butt welds. The inner shell is 1 inch thick and is welded to each end structure using a full penetration weld. The outer shell is 1.5 inches thick and is connected to each end structure using a full penetration weld.

The cask is lifted using two removable martensitic stainless steel trunnions (SA-182 F6NM) which are bolted to the cask body using eight 1-8 UNC bolts. The threaded holes in the upper end cask structure have thread inserts for improved durability.

On the outside of the outer shell, in the region not covered by the impact limiters, is a neutron shield composed of an outer sheet (neutron shield shell) of 0.25 inch thick Type 304 stainless steel, separated from the outer shell by twenty aluminum shield boxes which are filled with neutron absorbing material. The outside diameter of the cask including neutron shield and neutron shield shell is 38.5 inches.

A set of eight 1-8 UNC bolts is used to attach each of two impact limiters. Two of the bolt holes are contained in the trunnion attachment blocks and the other six are within attachment blocks which are welded to the cask shell and extend through the neutron shield. The attachment is completed with 16-inches long attachment bolts which pass through the impact limiter and thread into the attachment blocks described above.

All lead shielding is made from ASTM B29 copper lead. The annular lead shield is cast-in-place through the upper end structure and is nominally 3.5 inches thick. The shield at the bottom is made from lead sheet material that is packed firmly into place or poured and is also nominally 3.5 inches thick. The bottom lead cavity is closed using a 1.5 inch stainless steel plate.

The closure lid is machined from an ASME SA-182 F304 forging. It is attached to the cask using twenty 1-8 UNC ASME SA-540 Grade B23 Class 1 hex head bolts and stainless steel washers. The mating holes in the cask body are fitted with heavy duty thread inserts for improved durability. The mating surface of the lid features a step relief located at the bolt circle. This relief prevents any contact between the lid and the body outside of the bolt circle, thus preventing prying loads from being applied to the closure bolts. The closure lid includes two fluorocarbon O-ring seals of 0.25 inch cross-sectional diameter. The inner O-ring is the containment seal, and the outer is the test seal.

The gross weight of the loaded package is 51,000 lbs including a payload of 7,100 lbs. Table 1-1 summarizes the dimensions and weights of the TN-LC packaging components.

Trunnions, attached to the cask body, are provided for lifting and handling operations, including rotation of the packaging between the horizontal and vertical orientations. The TN-LC transport package is transported in the horizontal orientation on a specially designed shipping frame with the lid end facing the direction of travel.

The spent fuel payload in the TN-LC transport cask is shipped dry in a helium atmosphere. The heat generated by the spent fuel is rejected to the environment by conduction, convection and radiation. No forced cooling is required. TN-LC packaging markings are specified on Appendix 1.4.1 drawing.

1.2.1.1.1 Containment Vessel

The containment boundary for the TN-LC transport cask consists of the inner shell, the bottom flange, the bottom plug, the bottom plug inner O-ring, the top flange, the lid, the lid inner O-ring and vent and drain port plug bolts and seals. The containment system prevents leakage of radioactive material from the cask cavity and allows pre-shipment leakage testing of the assembled cask configuration.

The containment vessel prevents leakage of radioactive material from the cask cavity. It also maintains an inert atmosphere (helium) in the cask cavity. Helium within the cask assists in heat removal and provides an inert environment to protect the fuel assemblies/elements. To preclude air in-leakage, the cask cavity is pressurized with helium to above atmospheric pressure.

The TN-LC packaging containment system is designed, fabricated, examined and tested in accordance with the requirements of Subsection NB [3] of the ASME Code to the maximum practical extent. In addition, the design meets the requirements of Regulatory Guides 7.6 [4] and 7.8 [5]. Alternatives to the ASME Code are discussed in Chapter 2. The construction of the containment boundary is shown in the drawing provided in Appendix 1.4.1. The design of the containment boundary is discussed in Chapter 2, and the fabrication requirements (including examination and testing) of the containment boundary are discussed in Chapter 4.

1.2.1.1.2 Gamma and Neutron Shielding

The lead and steel shells of the TN-LC transport cask provide shielding between the fuel and the exterior surface of the package for the attenuation of gamma radiation.

Neutron shielding is provided by a borated resin compound surrounding the outer shell. The resin compound is cast into long, slender aluminum containers. The containers are constructed from 6063 aluminum. The thickness of the resin is 3.75 inches. The array of resin-filled containers is enclosed within a 0.25 inches thick outer stainless steel shell. In addition to serving as resin containers, the aluminum containers provide a heat conduction path from the cask body to the neutron shield shell.

Non-containment welds are examined in accordance with the requirements of ASME B&PV Code Subsection NF [6].

The structural analysis of the TN-LC transport package is presented in Chapter 2.

1.2.1.2 Tiedown and Lifting Devices

There are two trunnion attachment blocks on the cask and two pocket trunnions in the bottom flange. The pocket trunnions are used to support the bottom of the cask during rotation. They may also be used for horizontal lifting. The trunnion attachment blocks accommodate removable trunnions for handling, lifting, and rotating the cask. These trunnion blocks are attached to the structural shell. The TN-LC transport cask trunnions have a single shoulder and are designed to be single failure proof. The trunnions are fabricated and tested in accordance with ANSI N14.6 [7]. During transport, four plugs, containing neutron shielding material, are bolted to the cask to prevent radiation streaming.

When the cask is in the horizontal position, a shear key slot on the bottom of the cask transfers the longitudinal tie-down loads. The shear key slot is welded to the structural shell and protrudes through the neutron shield. During transport, the receptacle interfaces with the shear key attached to the transport skid.

1.2.1.3 Impact Limiters

The front and rear impact limiters, shown in Appendix 1.4.1 drawings, absorb energy during impact events by crushing balsa and redwood blocks. The two impact limiters are identical. Each has an outside diameter of 66 inches and a height of 27.75 inches. The inner and outer shells are Type 304 stainless steel joined by radial gussets of the same material. The metal structure locates, supports, confines, and protects the wood energy absorption material.

Each impact limiter is attached to the TN-LC transport cask by eight 1-8 UNC bolts made from SA-540 grade B23 class 1 material. The attachment bolts are designed to keep the impact limiters attached to the cask body during all NCT and HAC.

Each impact limiter is provided with four fusible plugs that are designed to melt during a fire accident, thereby relieving excessive internal pressure. Each impact limiter has four hoist rings for handling and two support angles for supporting the impact limiter in a vertical position during storage. The hoist rings are threaded into the reinforcement blocks which are welded to the impact limiter gusset plates, while the support angles are welded to the outer shell. Prior to transport, the impact limiter hoist rings are removed and replaced with bolts.

The functional description, as well as the performance analysis of the impact limiters, is provided in Chapter 2.

1.2.2 Contents

There are four basket designs provided for transport in the TN-LC packaging. Multiple fuel types are permitted in each basket. Details for each basket type are provided in Appendices 1.4.2 through 1.4.5. Table 1-2 lists each basket type provided for transport along with the required fuel spacers. In addition, the table lists the SAR appendix where the payload details can be found for each basket design. The TN-LC cask is designed and evaluated as shown in this SAR to transport the following contents:

- 1 intact PWR Assembly

- 1 intact BWR Assembly
- Up to 25 intact PWR (including MOX and EPR) or BWR fuel rods in a 25 pin can basket
- Up to 26 intact NRU Fuel Assemblies
- Up to 26 intact NRX Fuel Assemblies
- Up to 54 intact MTR Fuel Assemblies
- Up to 180 intact TRIGA Fuel Elements

Shipments in the TN-LC transport cask shall not exceed the following limits:

(a) The fuel and content limits specified in Appendices 1.4.2 through 1.4.5.

(b) Only one cask per conveyance is allowed.

(c) The maximum decay heat for any payload is 3.0 kW.

(d) Radiation standards shall meet the requirements of 10CFR71.47 and 10CFR71.51.

(e) Surface contamination shall meet the requirements of 10CFR71.87.

(g) The maximum number of fuel rods (pins) in the pin can basket is specified in Appendix 1.4.5.

1.2.3 Special Requirements for Plutonium

The TN-LC transport package may contain plutonium in excess of 0.74 Tbq (20 Ci) per package. As such, the plutonium is in solid form within the fuel matrix and must remain in the solid form.

1.2.4 Operational Features

The TN-LC transport package is not considered to be operationally complex and is designed to be compatible with reactor fuel pool loading/unloading at nuclear power plants, research reactors, Savannah River Site and Idaho National Laboratory. The package is also designed to be compatible with hot cells in Europe (as an example: French CEA Cadarache STAR facility, Belgian Nuclear Research Centre (SCK-SEN), German Institute for Transuranium Elements (ITU), Studsvik's facility in Sweden, and Paul Scherrer Institute (PSI) in Switzerland) and the United States (as an example: Oak Ridge National Laboratory, Idaho National Laboratory, and General Electric Vallecitos Nuclear Center). All operational features are readily apparent from inspection of the General Arrangement Drawings provided in Appendix 1.4.1, Section 1.4.1.1. The sequential steps to be followed for cask loading and unloading operations are provided in Chapter 7. The acceptance tests and maintenance program are specified in Chapter 8.

1.3 References

1. 10CFR71, Packaging and Transportation of Radioactive Material.

2. USNRC Regulatory Guide 7.9, "Standard Format and Content of Part 71 Applications for Approval of Packages for Radioactive Material," Rev. 2, March 2005.

3. American Society of Mechanical Engineers, ASME Boiler And Pressure Vessel Code, Section III, Division 1 - Subsection NB, 2004 edition including 2006 Addenda.

4. USNRC Regulatory Guide 7.6, "Design Criteria for the Structural Analysis of Shipping Cask Containment Vessel," Rev. 1, March 1978.

5. USNRC Regulatory Guide 7.8, "Load Combinations for the Structural Analysis of Shipping Cask," Rev. 1, March 1989.

6. American Society of Mechanical Engineers, ASME Boiler and Pressure Vessel Code, Subsection NF, 2004 edition including 2006 Addenda.

7. ANSI N14.6-1993, "American National Standard For Radioactive Materials-Special Lifting Devices for Shipping Containers Weighing 10,000 Pounds (4500 Kg) or More," American National Standards Institute, Inc., New York, New York.

1.4 Appendices

1.4.1 Drawings of TN-LC Packaging and TN-LC-NRUX, TN-LC-MTR, TN-LC-TRIGA, and TN-LC-1FA Baskets

1.4.2 TN-LC-NRUX Basket

1.4.3 TN-LC-MTR Basket

1.4.4 TN-LC-TRIGA Basket

1.4.5 TN-LC-1FA Basket

Table 1-1
Nominal Dimensions and Weights of the TN-LC Packaging

Nominal Dimensions (inches)	
TN-LC packaging overall length with impact limiters	230.00
TN-LC packaging overall length without impact limiters	197.50
TN-LC transport cask impact limiter outside diameter	66.00
TN-LC transport cask outside diameter (w/o impact limiters)	38.50
TN-LC transport cask cavity inner diameter	18.00
TN-LC transport cask cavity length (minimum)	182.50
TN-LC transport cask inner shell radial thickness	1.00
TN-LC transport cask lead gamma shield radial thickness	3.50
TN-LC transport cask body outer shell	1.50
TN-LC transport cask lid thickness	7.50
TN-LC transport cask bottom thickness	7.50
TN-LC transport cask resin and aluminum box thickness	4.00
TN-LC transport cask neutron shield thickness	3.75
Nominal Weights (lb)	
Weight of Contents	7,100
Empty weight of TN-LC Packaging with lid and impact limiters	43,900
Cask lid	1,000
Weight of impact limiters	3,000
Total loaded weight of TN-LC Packaging (without transport skid)	51,000

Note: Weight rounded up to nearest 100 lbs.

Table 1-2
Basket Configurations in the TN-LC Packaging

Basket Type	Subbasket Type	Spacer Required	SAR Appendix with Detailed Contents Description	Maximum Heat Load (kW)
TN-LC-NRUX	---	Yes	1.4.2	0.39
	---	Yes	1.4.2	0.39
TN-LC-MTR	---	Yes	1.4.3	1.5
TN-LC-TRIGA	---	Yes	1.4.4	1.5
TN-LC-1FA	1-PWR	Yes	1.4.5	3.0
	1-BWR	Yes	1.4.5	2.0
	25 Pin Can	No	1.4.5	3.0

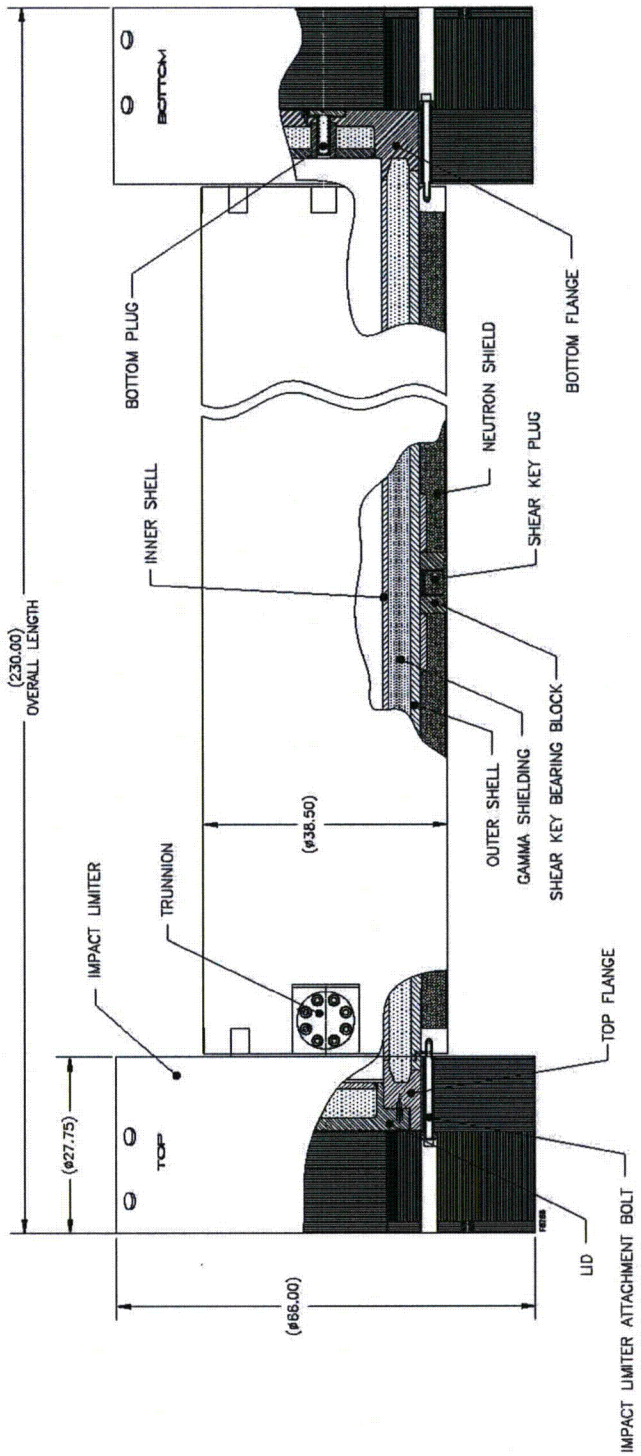

Figure 1-1
General Arrangement of the TN-LC Packaging

Appendix 1.4.1
TN-LC Transport Package Drawings

Drawing Number	Title
65200-71-01 Revision 0	TN-LC Cask Assembly (11 sheets)
65200-71-02 Revision 0	TN-LC Transport Package Regulatory Plate (1 sheet)
65200-71-20 Revision 0	TN-LC Impact Limiter Assembly (3 sheets)
65200-71-21 Revision 0	TN-LC Transport Package Transport Configuration (1 sheet)

Drawing Number	Title
65200-71-40 Revision 0	TN-LC-NRUX Basket, Basket Assembly (5 sheets)
65200-71-50 Revision 0	TN-LC-NRUX Basket, Basket Tube Assembly (5 sheets)

Drawing Number	Title
65200-71-60 Revision 0	TN-LC-MTR Basket, General Assembly (4 sheets)
65200-71-70 Revision 0	TN-LC-MTR Basket, Fuel Bucket (2 sheets)

Drawing Number	Title
65200-71-80 Revision 0	TN-LC-TRIGA Basket (5 sheets)

Drawing Number	Title
65200-71-90 Revision 0	TN-LC-1FA Basket (5 sheets)
65200-71-96 Revision 0	TN-LC-1FA BWR, Sleeve and Hold-Down Ring (2 sheets)
65200-71-102 Revision 0	TN-LC-1FA 25 Pin Can Basket (5 sheets)

PROPRIETARY AND SECURITY RELATED INFORMATION WITHHELD UNDER 10 CFR 2.390

REVISION	DESCRIPTION	DATE
0	FIRST ISSUE	05/31/11

ALL DIMENSIONS ARE NOMINAL UNLESS A SPECIFIC TOLERANCE IS INDICATED WITH THE DRAWING DIMENSION

DIMENSIONS ARE IN INCHES AND DEGREES UNLESS OTHERWISE SPECIFIED. DIMENSIONING IN ACCORDANCE WITH ASME Y14.5M-1994.

INTERPRET WELD SYMBOLS PER ANSI / AWS 2.4

TRANSNUCLEAR
AN AREVA COMPANY

SAFETY ANALYSIS REPORT

TN-LC CASK ASSEMBLY

DRAWING NO.	SCALE	SHEET
65200-71-01	NONE	1 OF 11

PROPRIETARY AND SECURITY RELATED INFORMATION WITHHELD UNDER 10 CFR 2.390

PROPRIETARY AND SECURITY RELATED INFORMATION WITHHELD UNDER 10 CFR 2.390

DRAWING NO.	SHEET	REVISION
65200-71-01	3 OF 11	0

PROPRIETARY AND SECURITY RELATED INFORMATION WITHHELD UNDER 10 CFR 2.390

DRAWING NO.	SHEET	REVISION
65200-71-01	4 OF 11	0

PROPRIETARY AND SECURITY RELATED INFORMATION WITHHELD UNDER 10 CFR 2.390

DRAWING NO.	SHEET	REVISION
65200-71-01	5 OF 11	0

PROPRIETARY AND SECURITY RELATED INFORMATION WITHHELD UNDER 10 CFR 2.390

DRAWING NO.	SHEET	REVISION
65200-71-01	6 OF 11	0

PROPRIETARY AND SECURITY RELATED INFORMATION WITHHELD UNDER 10 CFR 2.390

PROPRIETARY AND SECURITY RELATED INFORMATION WITHHELD UNDER 10 CFR 2.390

DRAWING NO.	SHEET	REVISION
65200-71-01	8 OF 11	0

PROPRIETARY AND SECURITY RELATED INFORMATION WITHHELD UNDER 10 CFR 2.390

DRAWING NO.	SHEET	REVISION
65200-71-01	9 OF 11	0

PROPRIETARY AND SECURITY RELATED INFORMATION WITHHELD UNDER 10 CFR 2.390

DRAWING NO.	SHEET	REVISION
65200-71-01	10 OF 11	0

PROPRIETARY AND SECURITY RELATED INFORMATION WITHHELD UNDER 10 CFR 2.390

DRAWING NO.	SHEET	REVISION
65200-71-01	11 OF 11	0

PROPRIETARY AND SECURITY RELATED INFORMATION WITHHELD UNDER 10 CFR 2.390

REVISION	DESCRIPTION	DATE
0	FIRST ISSUE	05/31/11

ALL DIMENSIONS ARE NOMINAL UNLESS A SPECIFIC TOLERANCE IS INDICATED WITH THE DRAWING DIMENSION

DIMENSIONS ARE IN INCHES AND DEGREES UNLESS OTHERWISE SPECIFIED. DIMENSIONING IN ACCORDANCE WITH ASME Y14.5M-1994.

INTERPRET WELD SYMBOLS PER ANSI / AWS 2.4

TRANSNUCLEAR
AN AREVA COMPANY

SAFETY ANALYSIS REPORT
TN-LC TRANSPORT CASK
REGULATORY PLATE

DRAWING NO.	SCALE	SHEET
65200-71-02	NONE	1 OF 1

PROPRIETARY AND SECURITY RELATED INFORMATION WITHHELD UNDER 10 CFR 2.390

REVISION	DESCRIPTION	DATE
0	FIRST ISSUE	05/31/11

ALL DIMENSIONS ARE NOMINAL UNLESS A SPECIFIC TOLERANCE IS INDICATED WITH THE DRAWING DIMENSION

DIMENSIONS ARE IN INCHES AND DEGREES UNLESS OTHERWISE SPECIFIED. DIMENSIONING IN ACCORDANCE WITH ASME Y14.5M-1994.

INTERPRET WELD SYMBOLS PER ANSI / AWS 2.4

TRANSNUCLEAR
AN AREVA COMPANY

SAFETY ANALYSIS REPORT

TN-LC
IMPACT LIMITER ASSEMBLY

DRAWING NO.	SCALE	SHEET
65200-71-20	NONE	1 OF 3

DRAWING NO. 65200-71-20 SHEET 1 OF 3

PROPRIETARY AND SECURITY RELATED INFORMATION WITHHELD UNDER 10 CFR 2.390

DRAWING NO.	SHEET	REVISION
65200-71-20	2 OF 3	0

PROPRIETARY AND SECURITY RELATED INFORMATION WITHHELD UNDER 10 CFR 2.390

DRAWING NO.	SHEET	REVISION
65200-71-20	3 OF 3	0

PROPRIETARY AND SECURITY RELATED INFORMATION WITHHELD UNDER 10 CFR 2.390

REVISION	DESCRIPTION	DATE
0	FIRST ISSUE	05/31/11

ALL DIMENSIONS ARE NOMINAL UNLESS A SPECIFIC TOLERANCE IS INDICATED WITH THE DRAWING DIMENSION

DIMENSIONS ARE IN INCHES AND DEGREES UNLESS OTHERWISE SPECIFIED. DIMENSIONING IN ACCORDANCE WITH ASME Y14.5M-1994.

INTERPRET WELD SYMBOLS PER ANSI / AWS 2.4

TRANSNUCLEAR
AN AREVA COMPANY

SAFETY ANALYSIS REPORT
TN-LC TRANSPORT PACKAGING
TRANSPORT CONFIGURATION

DRAWING NO.	SCALE	SHEET
65200-71-21	NONE	1 OF 1

PROPRIETARY AND SECURITY RELATED INFORMATION WITHHELD UNDER 10 CFR 2.390

REVISION	DESCRIPTION	DATE
0	FIRST ISSUE	05/31/11

ALL DIMENSIONS ARE NOMINAL UNLESS A SPECIFIC TOLERANCE IS INDICATED WITH THE DRAWING DIMENSION

DIMENSIONS ARE IN INCHES AND DEGREES UNLESS OTHERWISE SPECIFIED. DIMENSIONING IN ACCORDANCE WITH ASME Y14.5M-1994.

INTERPRET WELD SYMBOLS PER ANSI / AWS 2.4

TRANSNUCLEAR
AN AREVA COMPANY

SAFETY ANALYSIS REPORT
TN-LC-NRUX BASKET
BASKET ASSEMBLY

DRAWING NO.	SCALE	SHEET
65200-71-40	NONE	1 OF 5

PROPRIETARY AND SECURITY RELATED INFORMATION WITHHELD UNDER 10 CFR 2.390

DRAWING NO.	SHEET	REVISION
65200-71-40	2 OF 5	0

PROPRIETARY AND SECURITY RELATED INFORMATION WITHHELD UNDER 10 CFR 2.390

DRAWING NO.	SHEET	REVISION
65200-71-40	3 OF 5	0

PROPRIETARY AND SECURITY RELATED INFORMATION WITHHELD UNDER 10 CFR 2.390

DRAWING NO.	SHEET	REVISION
65200-71-40	4 OF 5	0

PROPRIETARY AND SECURITY RELATED INFORMATION WITHHELD UNDER 10 CFR 2.390

DRAWING NO.	SHEET	REVISION
65200-71-40	5 OF 5	0

PROPRIETARY AND SECURITY RELATED INFORMATION WITHHELD UNDER 10 CFR 2.390

REVISION	DESCRIPTION	DATE
0	FIRST ISSUE	05/31/11

ALL DIMENSIONS ARE NOMINAL UNLESS A SPECIFIC TOLERANCE IS INDICATED WITH THE DRAWING DIMENSION

DIMENSIONS ARE IN INCHES AND DEGREES UNLESS OTHERWISE SPECIFIED. DIMENSIONING IN ACCORDANCE WITH ASME Y14.5M-1994.

INTERPRET WELD SYMBOLS PER ANSI / AWS 2.4

TRANSNUCLEAR
AN AREVA COMPANY

SAFETY ANALYSIS REPORT
TN-LC-NRUX BASKET
BASKET TUBE ASSEMBLY

DRAWING NO.	SCALE	SHEET
65200-71-50	NONE	1 OF 5

DRAWING NO. 65200-71-50 SHEET 1 OF 5

PROPRIETARY AND SECURITY RELATED INFORMATION WITHHELD UNDER 10 CFR 2.390

DRAWING NO.	SHEET
65200-71-50	2 OF 5

DRAWING NO.	SHEET	REVISION
65200-71-50	2 OF 5	0

PROPRIETARY AND SECURITY RELATED INFORMATION WITHHELD UNDER 10 CFR 2.390

DRAWING NO.	SHEET	REVISION
65200-71-50	3 OF 5	0

PROPRIETARY AND SECURITY RELATED INFORMATION WITHHELD UNDER 10 CFR 2.390

DRAWING NO.	SHEET	REVISION
65200-71-50	4 OF 5	0

PROPRIETARY AND SECURITY RELATED INFORMATION WITHHELD UNDER 10 CFR 2.390

DRAWING NO.	SHEET	REVISION
65200-71-50	5 OF 5	0

PROPRIETARY AND SECURITY RELATED INFORMATION WITHHELD UNDER 10 CFR 2.390

REVISION	DESCRIPTION	DATE
0	FIRST ISSUE	05/31/11

ALL DIMENSIONS ARE NOMINAL UNLESS A SPECIFIC TOLERANCE IS INDICATED WITH THE DRAWING DIMENSION

DIMENSIONS ARE IN INCHES AND DEGREES UNLESS OTHERWISE SPECIFIED. DIMENSIONING IN ACCORDANCE WITH ASME Y14.5M-1994.

INTERPRET WELD SYMBOLS PER ANSI / AWS 2.4

TRANSNUCLEAR
AN AREVA COMPANY

SAFETY ANALYSIS REPORT
TN-LC-MTR BASKET
GENERAL ASSEMBLY

DRAWING NO.	SCALE	SHEET
65200-71-60	NONE	1 OF 4

PROPRIETARY AND SECURITY RELATED INFORMATION WITHHELD UNDER 10 CFR 2.390

DRAWING NO.	SHEET	REVISION
65200-71-60	2 OF 4	0

PROPRIETARY AND SECURITY RELATED INFORMATION WITHHELD UNDER 10 CFR 2.390

DRAWING NO.	SHEET	REVISION
65200-71-60	3 OF 4	0

PROPRIETARY AND SECURITY RELATED INFORMATION WITHHELD UNDER 10 CFR 2.390

DRAWING NO.	SHEET	REVISION
65200-71-60	4 OF 4	0

PROPRIETARY AND SECURITY RELATED INFORMATION WITHHELD UNDER 10 CFR 2.390

REVISION	DESCRIPTION	DATE
0	FIRST ISSUE	05/31/11

ALL DIMENSIONS ARE NOMINAL UNLESS A SPECIFIC TOLERANCE IS INDICATED WITH THE DRAWING DIMENSION

DIMENSIONS ARE IN INCHES AND DEGREES UNLESS OTHERWISE SPECIFIED. DIMENSIONING IN ACCORDANCE WITH ASME Y14.5M-1994.

INTERPRET WELD SYMBOLS PER ANSI / AWS 2.4

TRANSNUCLEAR
AN AREVA COMPANY

SAFETY ANALYSIS REPORT
TN-LC-MTR BASKET
FUEL BUCKET

DRAWING NO.	SCALE	SHEET
65200-71-70	NONE	1 OF 2

PROPRIETARY AND SECURITY RELATED INFORMATION WITHHELD UNDER 10 CFR 2.390

DRAWING NO.	SHEET	REVISION
65200-71-70	2 OF 2	0

PROPRIETARY AND SECURITY RELATED INFORMATION WITHHELD UNDER 10 CFR 2.390

REVISION	DESCRIPTION	DATE
0	FIRST ISSUE	05/31/11

ALL DIMENSIONS ARE NOMINAL UNLESS A SPECIFIC TOLERANCE IS INDICATED WITH THE DRAWING DIMENSION

DIMENSIONS ARE IN INCHES AND DEGREES UNLESS OTHERWISE SPECIFIED. DIMENSIONING IN ACCORDANCE WITH ASME Y14.5M-1994.

INTERPRET WELD SYMBOLS PER ANSI / AWS 2.4

TRANSNUCLEAR
AN AREVA COMPANY

SAFETY ANALYSIS REPORT

TN-LC-TRIGA BASKET

DRAWING NO.	SCALE	SHEET
65200-71-80	NONE	1 OF 5

DRAWING NO. 65200-71-80 SHEET 1 OF 5

PROPRIETARY AND SECURITY RELATED INFORMATION WITHHELD UNDER 10 CFR 2.390

DRAWING NO.	SHEET	REVISION
65200-71-80	2 OF 5	0

PROPRIETARY AND SECURITY RELATED INFORMATION WITHHELD UNDER 10 CFR 2.390

DRAWING NO.	SHEET	REVISION
65200-71-80	3 OF 5	0

PROPRIETARY AND SECURITY RELATED INFORMATION WITHHELD UNDER 10 CFR 2.390

DRAWING NO.	SHEET	REVISION
65200-71-80	4 OF 5	0

PROPRIETARY AND SECURITY RELATED INFORMATION WITHHELD UNDER 10 CFR 2.390

DRAWING NO.	SHEET	REVISION
65200-71-80	5 OF 5	0

PROPRIETARY AND SECURITY RELATED INFORMATION WITHHELD UNDER 10 CFR 2.390

REVISION	DESCRIPTION	DATE
0	FIRST ISSUE	05/31/11

ALL DIMENSIONS ARE NOMINAL UNLESS A SPECIFIC TOLERANCE IS INDICATED WITH THE DRAWING DIMENSION

DIMENSIONS ARE IN INCHES AND DEGREES UNLESS OTHERWISE SPECIFIED. DIMENSIONING IN ACCORDANCE WITH ASME Y14.5M-1994.

INTERPRET WELD SYMBOLS PER ANSI / AWS 2.4

TRANSNUCLEAR
AN AREVA COMPANY

SAFETY ANALYSIS REPORT

TN-LC-1FA BASKET

DRAWING NO.	SCALE	SHEET
65200-71-90	NONE	1 OF 5

PROPRIETARY AND SECURITY RELATED INFORMATION WITHHELD UNDER 10 CFR 2.390

DRAWING NO.	SHEET	REVISION
65200-71-90	2 OF 5	0

PROPRIETARY AND SECURITY RELATED INFORMATION WITHHELD UNDER 10 CFR 2.390

DRAWING NO.	SHEET	REVISION
65200-71-90	3 OF 5	0

PROPRIETARY AND SECURITY RELATED INFORMATION WITHHELD UNDER 10 CFR 2.390

PROPRIETARY AND SECURITY RELATED INFORMATION WITHHELD UNDER 10 CFR 2.390

DRAWING NO.	SHEET	REVISION
65200-71-90	5 OF 5	0

PROPRIETARY AND SECURITY RELATED INFORMATION WITHHELD UNDER 10 CFR 2.390

REVISION	DESCRIPTION	DATE
0	FIRST ISSUE	05/31/11

ALL DIMENSIONS ARE NOMINAL UNLESS A SPECIFIC TOLERANCE IS INDICATED WITH THE DRAWING DIMENSION

DIMENSIONS ARE IN INCHES AND DEGREES UNLESS OTHERWISE SPECIFIED. DIMENSIONING IN ACCORDANCE WITH ASME Y14.5M-1994.

INTERPRET WELD SYMBOLS PER ANSI / AWS 2.4

TRANSNUCLEAR
AN AREVA COMPANY

SAFETY ANALYSIS REPORT
TN-LC-1FA BWR
SLEEVE AND
HOLD-DOWN RING

DRAWING NO.	SCALE	SHEET
65200-71-96	NONE	1 OF 2

PROPRIETARY AND SECURITY RELATED INFORMATION WITHHELD UNDER 10 CFR 2.390

DRAWING NO.	SHEET	REVISION
65200-71-96	2 OF 2	0

PROPRIETARY AND SECURITY RELATED INFORMATION WITHHELD UNDER 10 CFR 2.390

REVISION	DESCRIPTION	DATE
0	FIRST ISSUE	05/31/11

ALL DIMENSIONS ARE NOMINAL UNLESS A SPECIFIC TOLERANCE IS INDICATED WITH THE DRAWING DIMENSION

DIMENSIONS ARE IN INCHES AND DEGREES UNLESS OTHERWISE SPECIFIED. DIMENSIONING IN ACCORDANCE WITH ASME Y14.5M-1994.

INTERPRET WELD SYMBOLS PER ANSI / AWS 2.4

TRANSNUCLEAR
AN AREVA COMPANY

SAFETY ANALYSIS REPORT
TN-LC-1FA
25 PIN CAN BASKET

DRAWING NO.	SCALE	SHEET
65200-71-102	NONE	1 OF 5

65200-71-102 1 OF 5

PROPRIETARY AND SECURITY RELATED INFORMATION WITHHELD UNDER 10 CFR 2.390

DRAWING NO.	SHEET	REVISION
65200-71-102	2 OF 5	0

PROPRIETARY AND SECURITY RELATED INFORMATION WITHHELD UNDER 10 CFR 2.390

DRAWING NO.	SHEET	REVISION
65200-71-102	3 OF 5	0

PROPRIETARY AND SECURITY RELATED INFORMATION WITHHELD UNDER 10 CFR 2.390

DRAWING NO.	SHEET	REVISION
65200-71-102	4 OF 5	0

PROPRIETARY AND SECURITY RELATED INFORMATION WITHHELD UNDER 10 CFR 2.390

DRAWING NO.	SHEET	REVISION
65200-71-102	5 OF 5	0

Appendix 1.4.2
TN-LC-NRUX Basket

TABLE OF CONTENTS

1.4.2.1 TN-LC-NRUX Basket Description 1.4.2-1
1.4.2.2 TN-LC-NRUX Basket Contents 1.4.2-2
1.4.2.2.1 NRU Fuel Assemblies 1.4.2-2
1.4.2.2.2 NRX Mk I Fuel Assemblies 1.4.2-2
1.4.2.3 References 1.4.2-3

LIST OF TABLES

Table 1.4.2-1 NRU Fuel Specification and Fuel Design Characteristics of Assemblies Permitted in the TN-LC-NRUX Basket 1.4.2-4
Table 1.4.2-2 NRX Mk I Fuel Specification and Design Characteristics of Fuel Assemblies Permitted in the TN-LC-NRUX Basket 1.4.2-5

LIST OF FIGURES

Figure 1.4.2-1 NRU 12 Rod Fuel Assembly 1.4.2-6
Figure 1.4.2-2 NRX Mk I 7 Rod Fuel Assembly 1.4.2-7

Appendix 1.4.2
TN-LC-NRUX Basket

NOTE: References in this Appendix are shown as [1], [2], etc. and refer to the reference list in Section 1.4.2.3.

1.4.2.1 TN-LC-NRUX Basket Description

The TN-LC cask is designed to contain the TN-LC-NRUX basket assembly, top end caps, 26 NRU or NRX Mk I fuel assemblies and spacers while remaining completely supported by the TN-LC cask.

The basket structure is designed, fabricated and inspected in accordance with ASME B&PV Code Subsection NG [1]. Alternatives to the code are provided in Chapter 2. The overall length of the basket is approximately 123 in. and has a diameter of 17.5 in. The details of the TN-LC-NRUX basket are shown in drawings 65200-71-40 and 65200-71-50 in Chapter 1, Appendix 1.4.1.

The TN-LC-NRUX basket is designed to accommodate 26 fuel assemblies of either NRU or NRX Mk I types. The basket structure consists of two 13-tube subassemblies. Those subassemblies are comprised of 13 stainless steel tubes welded together, wrapped in a stainless steel plate and capped on the bottom with a perforated stainless steel plate. The two basket tube subassemblies are centered in the basket assembly with a series of guide plates and guide plate supports. The tube subassemblies can be inserted and removed from the basket assembly independently. Two aluminum basket assembly tube caps are used to confine the contents of each tube and to limit axial motion of the fuel and tube subassemblies with respect to the cask.

The basket tube assembly bottom covers and tube caps, combined with top and bottom cask spacers, are designed to transmit longitudinal fuel assembly loads to the cask body. The fuel assemblies are supported laterally by the stainless steel tubes, tube wraps, guide plates, guide plate supports, and basket assembly tube. The complete basket assembly is supported laterally by the cask shell. The basket structure is oriented parallel to the axis of the cask and establishes and maintains fuel assembly orientation.

A shear key is welded to the inner wall of the cask. The shear key mates with a notch in the bottom cask spacer, which is keyed to the basket assembly to prevent the basket from rotating during normal operations.

No neutron absorbing poison plates are used in the TN-LC-NRUX basket.

The maximum allowable heat load for the TN-LC cask with TN-LC-NRUX basket is 0.39 kW.

1.4.2.2 TN-LC-NRUX Basket Contents

The TN-LC-NRUX has two different types of payload: National Research Universal Reactor (NRU) and National Experimental Reactor (NRX) Mk I intact fuel assemblies. NRU and NRX Mk I fuel assemblies are shown in Figure 1.4.2-1 and Figure 1.4.2-2 for illustrative purposes.

The TN-LC-NRUX basket is designed to house twenty-six intact and/or damaged NRU or NRX Mk I fuel assemblies. Intact fuel assemblies are fuel assemblies containing fuel rods with no known or suspected cladding defects greater than hairline cracks or pinhole leaks. Damaged fuel assemblies with cladding damage in excess of pin hole leaks or hairline cracks are authorized. The extent of the damage is limited such that the total surface area of the damaged cladding does not exceed 5% of the total surface area of each rod.

1.4.2.2.1 NRU Fuel Assemblies

NRU fuel assemblies consist of twelve fuel rods in a bundle. The twelve rods are located in a circular array and are held in position by end plate and flow spacers. The fuel rod bundle normally is contained within a flow tube, which is removed for transport. Without the flow tube, the assembly is approximately 115 in. long and weighs approximately 4.66 kg.

The initial ^{235}U content of each assembly is limited 545 g.

The fuel assembly specifications and design characteristics of NRU fuel assemblies considered are described in Table 1.4.2-1.

1.4.2.2.2 NRX Mk I Fuel Assemblies

NRX Mk I fuel assemblies consist of 7 fuel rods in a bundle and held in position by spacers located along the bundle. An NRX Mk I fuel assembly cut for shipping is approximately 115 in. long and weighs approximately 5.78 kg.

The initial ^{235}U mass in a rod is limited to 526.4 g.

The fuel assembly specifications and design characteristics of NRX Mk I fuel assemblies considered are described in Table 1.4.2-2.

1.4.2.3 References

1. American Society of Mechanical Engineers, ASME Boiler and Pressure Vessel Code, Section III, Division 1 - Subsection NG 2004 with Addenda through 2006.

Table 1.4.2-1
NRU Fuel Specification and Fuel Design Characteristics of Assemblies Permitted in the TN-LC-NRUX Basket

Parameter	Value
Physical and Material Description	
Number of Assemblies	≤ 26
Number of rods/assembly	≤ 12
Assembly length (in.) (1)	≤ 116
Nominal Assembly mass (g)	4660
Fuel form	U-Al
^{235}U per rod (g)	≤ 45.4
Enrichment (wt.% ^{235}U)	≤ 93
Cladding and Spacer Material	Al
Thermal and Radiological Parameters	
Cooling Time (years) (2)	≥ 10
Depletion (wt.% ^{235}U) (3)	≤ 80
Decay Heat per Assembly (watts) (4)	≤ 15

Notes:
1. Maximum length of the fuel assembly (unirradiated) for shipment
2. The cooling time of the fuel assembly rounded down to 0.5 years
3. The depletion (or burnup) of the fuel assembly rounded up to 0.5%
4. The decay heat of the fuel assembly is less than 15 watts at the maximum burnup and minimum cooling time.

Table 1.4.2-2
NRX Mk I Fuel Specification and Design Characteristics of Fuel Assemblies Permitted in the TN-LC-NRUX Basket

Parameter	Value
Physical and Material Description	
Number of Assemblies	≤ 26
Number of rods/assembly	7
Assembly length (in.) (1)	≤ 116
Nominal Assembly mass (g)	5780
Fuel form	U-Al
^{235}U per rod (g)	≤ 75.2
Enrichment (wt.% ^{235}U)	≤ 93
Cladding and Spacer Material	Al
Thermal and Radiological Parameters	
Cooling Time (years) (2)	≤ 10
Depletion (wt.% ^{235}U) (3)	≤ 80
Decay Heat per Assembly (watts) (4)	≤ 15

Notes:
1. Maximum Length of the fuel assembly (unirradiated) for shipment
2. The cooling time of the fuel assembly rounded down to 0.5 years
3. The depletion (or burnup) of the fuel assembly rounded up to 0.5%
4. The decay heat of the fuel assembly is less than 15 watts at the maximum burnup and minimum cooling time.

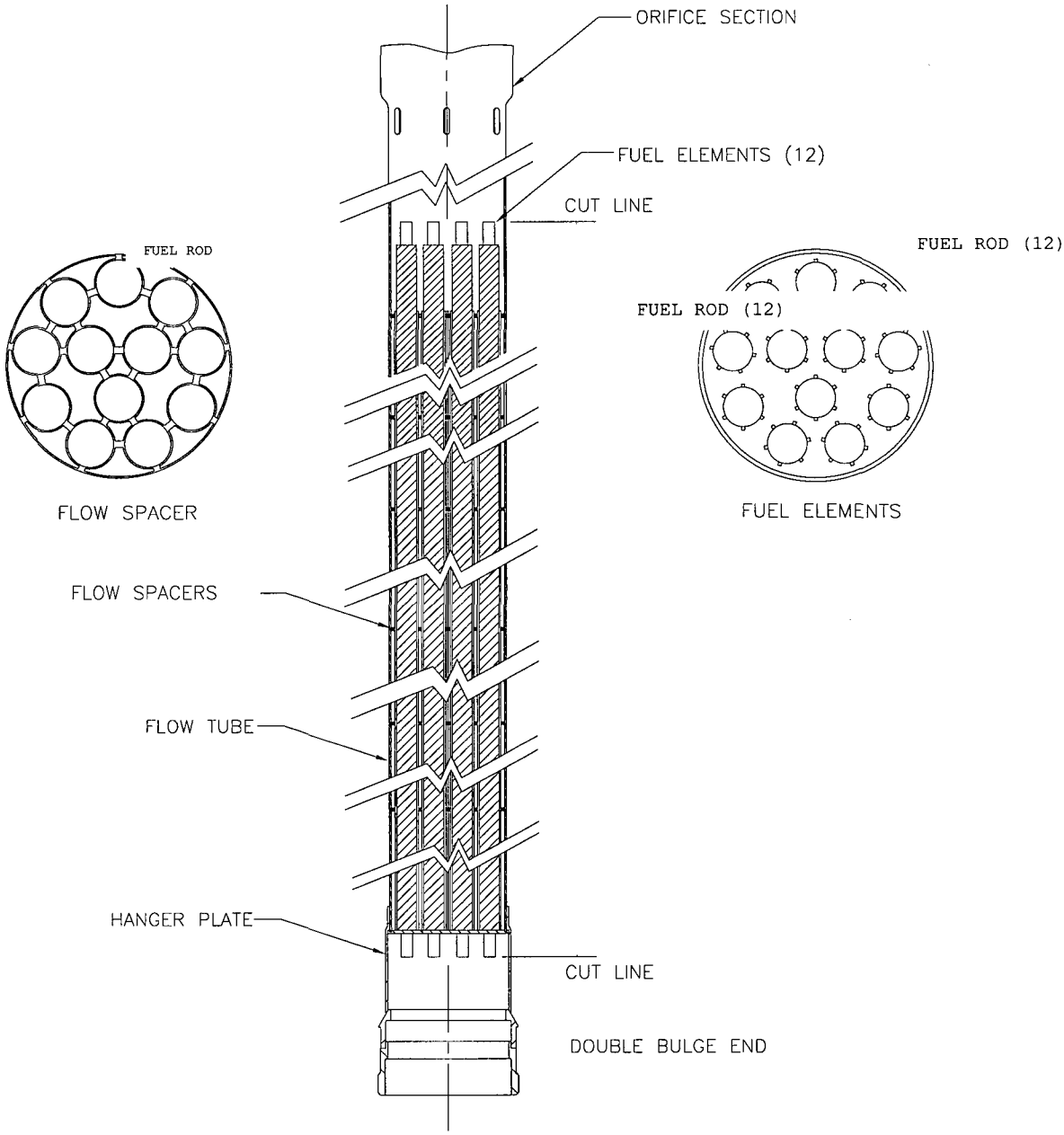

Figure 1.4.2-1
NRU 12 Rod Fuel Assembly

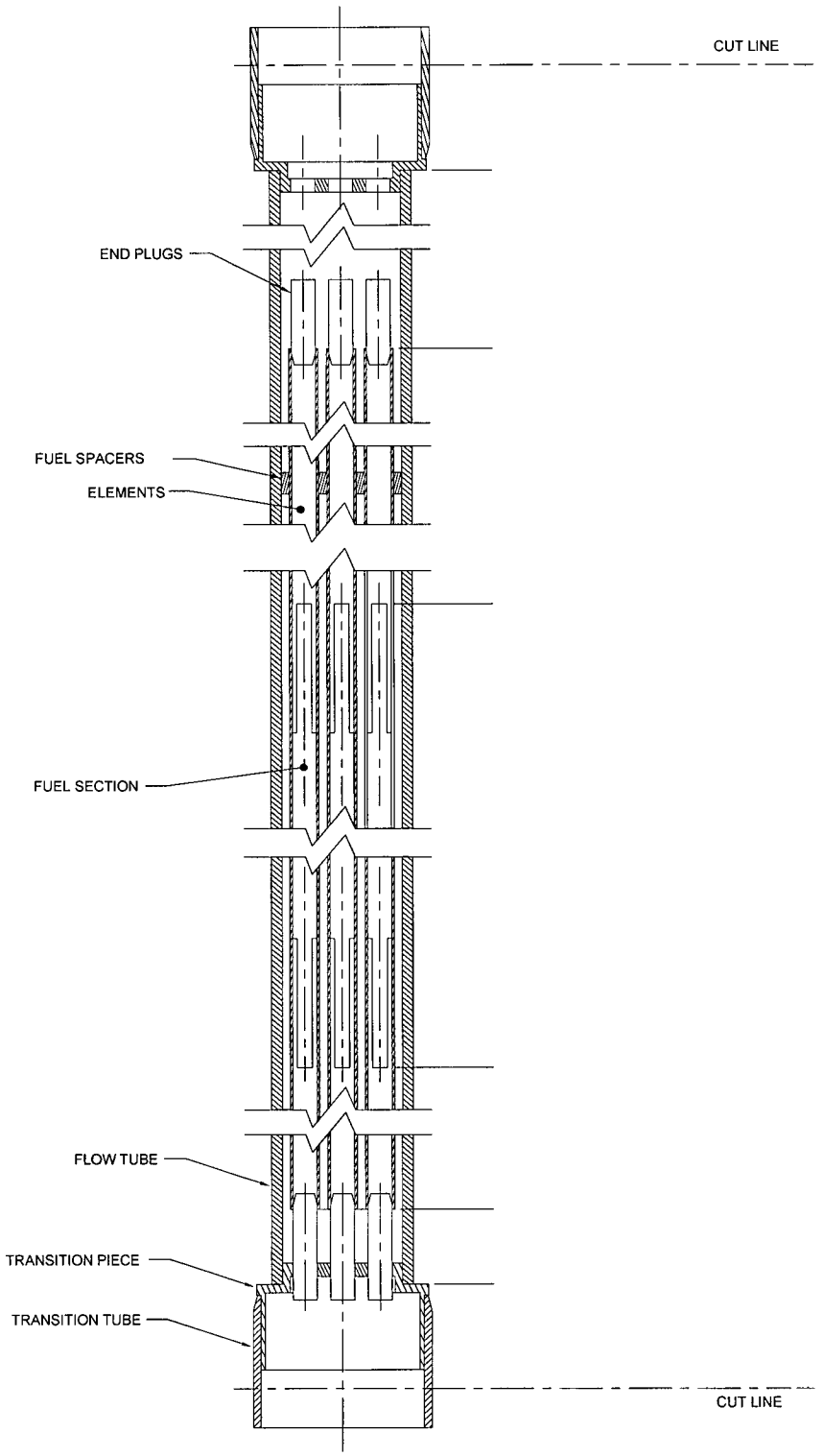

Figure 1.4.2-2
NRX Mk I 7 Rod Fuel Assembly

Appendix 1.4.3
TN-LC-MTR Basket

TABLE OF CONTENTS

1.4.3.1 TN-LC-MTR Basket Description 1.4.3-1
1.4.3.2 TN-LC-MTR Basket Contents 1.4.3-2
1.4.3.3 References 1.4.3-3

LIST OF TABLES

Table 1.4.3-1 MTR Fuel Element Specification 1.4.3-4
Table 1.4.3-2 MTR Fuel Element Design Characteristics 1.4.3-5
Table 1.4.3-3 TN-LC-MTR Fuel Element Qualification 1.4.3-6

LIST OF FIGURES

Figure 1.4.3-1 Representative MTR Fuel Element 1.4.3-7

Appendix 1.4.3
TN-LC-MTR Basket

NOTE: References in this Appendix are shown as [1], [2], etc. and refer to the reference list in Section 1.4.3.3.

1.4.3.1 TN-LC-MTR Basket Description

The TN-LC-MTR basket assembly consists of up to eighteen fuel buckets, each of which has three compartments, which are stacked within the main basket assembly. Each fuel compartment accommodates one MTR fuel element. The main basket assembly has three slots to receive the fuel buckets. This basic three slot geometry is required to interface with the receiving facility for MTR fuel elements. The facility utilizes a shielded transfer system to remove contents from the TN-LC cask prior to placement in a storage pool. Fuel buckets are approximately 3.86 inches by 11.19 inches and have a height selected to maximize the quantity of fuel elements in each payload and are based on the specific MTR fuel to be transported. The base of each bucket fits within the top of the bucket below it to confine each fuel element within the bucket and compartment in which it was initially loaded. Stainless steel top end caps are provided for the top set of fuel buckets, which also act to limit axial fuel bucket to cask gaps.

The TN-LC cask is designed to contain the TN-LC-MTR basket assembly, MTR fuel buckets, top end caps, and MTR fuel elements while remaining supported completely by the transport cask.

The basket structure is designed, fabricated and inspected in accordance with ASME B&PV Code Subsection NG [1]. Alternatives to the code are provided in Chapter 2. The overall length of the basket is 182.0 inches and has a nominal diameter of 17.5 inches. The details of the MTR basket and fuel buckets are shown in drawings 65200-71-60 and 65200-71-70 in Chapter 1, Appendix 1.4.1.

The TN-LC-MTR basket is designed to accommodate up to fifty-four intact MTR fuel elements. The basket structure contains three stacks of buckets with each stack containing a maximum of six fuel buckets. The fuel buckets are fabricated from stainless steel plate which is welded together to form three compartments and a perforated stainless steel bottom plate. The three stacks of six fuel buckets each are centered in the basket assembly with two stainless steel divider plates and four thick outer plates. The thick outer plates have aluminum rails bolted onto the outside which provide the transition to the cask inside shell. Each stack of fuel buckets can be inserted and removed from the basket assembly independently from the other two stacks.

The basket structure combined with the fuel buckets and top caps are designed to transfer longitudinal fuel element and bucket loads to the cask body. The fuel elements and buckets are supported laterally by the stainless steel outer plates and aluminum rails. The basket assembly is supported laterally by the cask shell. The basket structure and fuel buckets are oriented parallel to the axis of the cask and establish and maintain fuel orientation.

A shear key welded to the inner wall of the cask mates with a notch in the basket assembly to prevent the basket from rotating during normal operations.

No neutron absorbing poison plates are used in the TN-LC-MTR basket.

The maximum allowable heat load for the TN-LC cask with TN-LC-MTR basket is 1.5 kW.

1.4.3.2 TN-LC-MTR Basket Contents

Each MTR fuel element contains between ten and twenty-three flat or curved plates as shown in Figure 1.4.3-1. The fuel plates are fabricated and brazed or swaged into the two fuel element side plates. The fuel "meat" is a mixture of uranium and aluminum and may also contain oxygen or silicon in the form of U-Al, U_3O_8-Al, or U_3Si_2-Al. The cladding and structural materials are an aluminum alloy. Fuel elements are approximately 110 cm long.

The initial uranium enrichment is up to 94.0 weight percent ^{235}U. The maximum fuel element decay heat considered is 25 watts. A maximum depletion of 80.0 weight percent ^{235}U is evaluated.

The initial ^{235}U content of each MTR fuel element ranges up to 470 g.

Each fuel element, as shipped, may weigh up to 30 lb.

The TN-LC cask with TN-LC-MTR basket may transport MTR elements in any one of the bucket combinations shown on drawing 65200-71-70 with a maximum MTR fuel element heat load of 25 watts and a cask basket heat load of 1.5 kW.

The TN-LC cask with the TN-LC-MTR basket and MTR fuel is designed to transport MTR fuel elements with the specifications described in Table 1.4.3-1. The design characteristics of the MTR fuel elements are described in Table 1.4.3-2. The fuel qualification tables are shown in Table 1.4.3-3.

1.4.3.3 References

1. American Society of Mechanical Engineers, ASME Boiler and Pressure Vessel Code, Section III, Division 1 - Subsection NG 2004 with Addenda through 2006.

Table 1.4.3-1
MTR Fuel Element Specification

PHYSICAL PARAMETERS: MTR Fuel Elements	MTR fuel elements that are enveloped by the fuel element design characteristics listed in Table 1.4.3-2. Fuel elements manufactured by the same or other vendors but bounded by the design characteristics listed in Table 1.4.3-2 are also acceptable. Fuel elements are categorized into Eight classes based on design characteristics. MTR fuel elements with damaged cladding are authorized, provided the total surface area of the damage does not exceed 5% of the total surface area of the damaged element.
No. of MTR elements	≤ 54 per cask
THERMAL/RADIOLOGICAL PARAMETERS: Fuel Element Average Burnup and minimum Cooling Time	Per Table 1.4.3-3. Fuel elements are categorized into four types based on enrichment and ^{235}U loading.
Decay Heat	≤ 25 watts per element

Table 1.4.3-2
MTR Fuel Element Design Characteristics

Fuel Element Class	**M-01**	**M-02**	**M-03**	**M-04**	**M-05**	**M-06**	**M-07**	**M-08**[1]
Number of Fuel Plates [2]	≤23	≤21	≤19	≤17	≤10	≤18	≤17	≤23
^{235}U mass per Plate (g)	≤16	≤16.5	≤17.5	≤19	≤22	≤20.5	≤11.5	≤22
Active Fuel Width (cm)	≤6.7	≤6.7	≤6.7	≤6.7	≤6.7	≤5.9	≤6.7	≤6.7
Active Fuel Length (cm)	≥ 56	≥ 56	≥ 56	≥ 56	≥ 56	≥ 56	≥ 27.5	≥ 56
^{235}U in U (wt. %)	≤ 94	≤ 94	≤ 94	≤ 94	≤ 94	≤ 94	≤ 94	≤ 94
Fuel Element Depth (cm)	≥7.5	≥7.5	≥7.5	≥7.5	≥7.5	≥7.5	≥7.5	≥7.5

Notes:
1. The M-08 Element class requires that the central stack of fuel elements remain empty. Also, the total ^{235}U mass is limited by the maximum value in Table 1.4.3-3.
2. The plate thickness is greater than 0.12 cm and the clad thickness is greater than 0.02 cm.

Table 1.4.3-3
TN-LC-MTR Fuel Element Qualification

Enrichment Type	Burnup (MWD/MTU)	Decay Time (days)
Type A ^{235}U Enrichment ≥ 90% ^{235}U Mass ≤ 380 g	66,000	740
	165,000	1120
	330,000	1440
	495,000	1680
	660,000	1950
Type B ^{235}U Enrichment ≥ 90% 380 < ^{235}U Mass ≤ 460 g	57,750	770
	144,375	1150
	288,750	1470
	433,125	1710
	577,500	1950
Type C 40% ≤ ^{235}U Enrichment < 90% ^{235}U Mass ≤ 380 g	29,330	740
	73,325	1120
	146,650	1440
	219,975	1690
	293,300	1940
Type D 19% ≤ ^{235}U Enrichment < 40% ^{235}U Mass ≤ 470 g	13,930	830
	34,825	1220
	69,650	1560
	104,475	1850
	139,300	2150

Notes:

- Use burnup (MWD/MTU) and Enrichment Type (A, B, C or D with limits on ^{235}U Enrichment and ^{235}U mass per element) to look-up minimum cooling time in years. Licensee is responsible for ensuring that uncertainties in are burnup, enrichment and mass applied conservatively.
- Fuel with a burnups greater than those listed for each Enrichment Type is unacceptable for transport.
- Because only a limited number of burnup points are listed in this Table, burnups may be either rounded up to the next higher burnup or linear interpolation may be used to determine the minimum cooling time. However, for conservatism, an additional cooling time of 30 days must be added to any linearly interpolated value.
- Example: An M-06 class element with an enrichment of 45 wt. % ^{235}U and a ^{235}U mass of 350 grams is classified as enrichment Type C. burnup of 100,000 MWD/MTU is acceptable for transport after 1440 days cooling time as defined by 146,650 MWD/MTU from the qualification table (when linear interpolation is not employed). When linear interpolation is employed the minimum required cooling time is 1267 days (1237 days based on interpolation + 30 days additional cooling time).

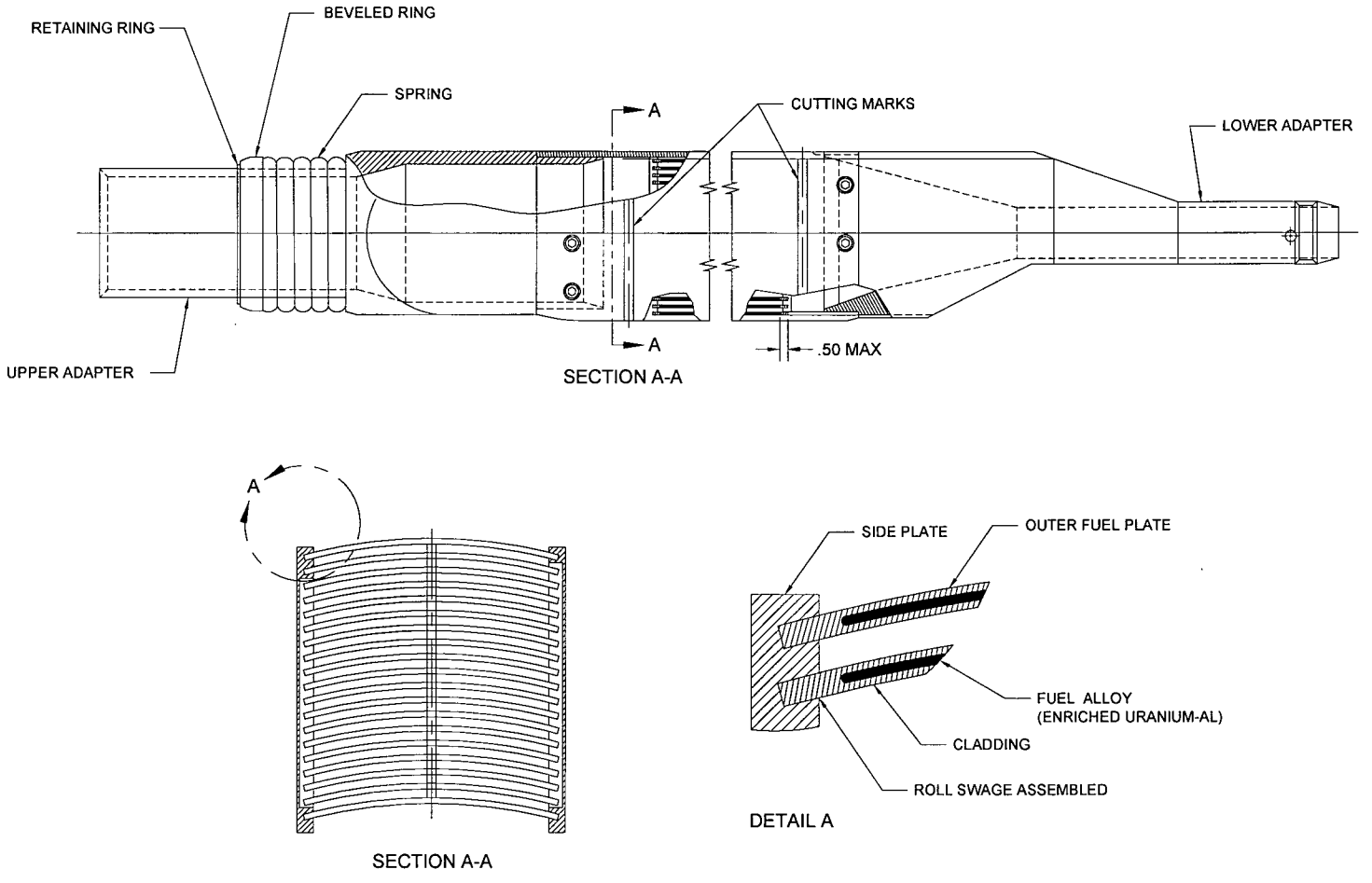

Figure 1.4.3-1
Representative MTR Fuel Element

Appendix 1.4.4
TN-LC-TRIGA Basket

TABLE OF CONTENTS

1.4.4.1 TN-LC-TRIGA Basket Description 1.4.4-1
1.4.4.2 TN-LC-TRIGA Basket Contents 1.4.4-2
1.4.4.3 References 1.4.4-3

LIST OF TABLES

Table 1.4.4-1 TRIGA Fuel Assembly/Element Specification 1.4.4-4
Table 1.4.4-2 TRIGA Standard Fuel Assembly/Element Design Characteristics 1.4.4-5
Table 1.4.4-3 TRIGA Fuel Follower Control Rods Design Characteristics 1.4.4-6
Table 1.4.4-4 TRIGA Fuel Qualification for Standard Fuel Assembly/Elements 1.4.4-7
Table 1.4.4-5 TRIGA Fuel Qualification for Fuel Follower Control Rods 1.4.4-8

Appendix 1.4.4
TN-LC-TRIGA Basket

NOTE: References in this Appendix are shown as [1], [2], etc. and refer to the reference list in Section 1.4.4.3.

1.4.4.1 TN-LC-TRIGA Basket Description

The TN-LC cask is designed to contain the TN-LC-TRIGA basket assembly, cask spacer, and up to 180 TRIGA Fuel Assemblies/Elements while remaining completely supported by the transport cask.

The basket structure is designed, fabricated and inspected in accordance with ASME B&PV Code Subsection NG [1]. Alternatives to the Code are provided in Chapter 2. The overall length of the basket with cask spacer is 182.0 inches and has a diameter of 17.50 inches. The details of the TN-LC-TRIGA fuel basket are shown on drawing 65200-71-80 in Chapter 1, Appendix 1.4.1.

The TN-LC-TRIGA basket is designed to accommodate different fuel assemblies/elements of varying length. Two alternate length options of the TN-LC-TRIGA basket are provided. Five TN-LC-TRIGA basket assemblies are stacked vertically in two alternate configurations consisting of either (a) five short length baskets stacked vertically or (b) a long basket stacked on four short length baskets. Each configuration requires a unique cask spacer. The basket structure consists of a welded assembly of nine stainless steel tubes (fuel compartments) separated by poison plates and surrounded by a larger stainless steel box or wrap, and aluminum support rails. Each fuel compartment can accommodate up to four TRIGA assemblies/elements resulting in a total capacity of 36 assemblies/elements per basket.

Each of the stacked basket structures is closed at the bottom end by a bottom plate and open at the top end, except when stacked in the cask, where the bottom of the basket above serves to cover the basket opening below. The baskets are aligned with one another by their lifting lugs, which key into the basket structure below. A separate lid is used to close the top basket in the basket assembly prior to transport.

Longitudinal fuel assembly/element loads are applied through the stack of baskets and then to the cask body. The fuel assemblies/elements are supported laterally by the stainless steel structural boxes. The baskets are supported laterally by the aluminum basket rails. The basket rails are oriented parallel to the axis of the canister and are attached to the periphery of the basket to provide support as well as to establish and maintain basket orientation.

A shear key, welded to the inner wall of the cask, mates with a notch in the cask spacer, which is keyed to the assembly of stacked baskets to prevent the basket assembly from rotating during normal operations.

The TN-LC-TRIGA basket is provided with neutron absorbing poison plates consisting of either boron enriched aluminum alloy or metal matrix composite which has a minimum B10 content of 5.56 mg/cm^2 or Boral® which has a minimum B10 content of 6.67 mg/cm^2.

The maximum allowable heat load for the TN-LC cask with 5 stacked TN-LC-TRIGA basket assemblies is 1.5 kW.

1.4.4.2 TN-LC-TRIGA Basket Contents

There are many different TRIGA fuel designs. However, TRIGA fuel assemblies/ elements, which are approximately 1.5 inches in diameter, are the only basic TRIGA fuel design types considered for shipment in the TN-LC cask with TN-LC-TRIGA basket.

Two general design types of TRIGA fuel assemblies/elements are included. The standard TRIGA fuel assembly/element, which is either aluminum clad or stainless steel clad, and TRIGA fuel follower control rod elements. The TN-LC-TRIGA is designed and evaluated to transport up to 180 TRIGA fuel assemblies/elements of the above general design type.

TRIGA fuel utilizes a uranium zirconium hydride (U-ZrH) fuel matrix.

The TN-LC cask with a TN-LC-TRIGA basket assembly is designed to transport intact TRIGA fuel assemblies/elements with the specifications described in Table 1.4.4-1. Intact fuel assemblies/ elements are fuel assemblies/elements with no known or suspected cladding defects greater than hairline cracks or pinhole leaks. The design characteristics of the TRIGA fuel assemblies/ elements are described in Table 1.4.4-2 and Table 1.4.4-3. The fuel qualification tables are shown in Table 1.4.4-4 and Table 1.4.4-5.

The TN-LC-TRIGA basket may transport TRIGA fuel assemblies/elements with a maximum decay heat of 8 watts per assembly/element or a total of 288 watts per basket.

1.4.4.3 References

1. American Society of Mechanical Engineers, ASME Boiler and Pressure Vessel Code, Section III, Division 1 - Subsection NG 2004 with Addenda through 2006 .

Table 1.4.4-1
TRIGA Fuel Assembly/Element Specification

PHYSICAL PARAMETERS: Standard Fuel Assemblies/Elements and Fuel Follower Control Rods	Intact TRIGA standard assemblies/elements that are enveloped by the fuel assemblies/element design characteristics listed in Table 1.4.4-2. Fuel assemblies/elements manufactured by the same or other vendors but bounded by the design characteristics listed in Table 1.4.4-2 are also acceptable. Intact TRIGA fuel follower control rods that are enveloped by the fuel assembly/element design characteristics listed in Table 1.4.4-3. Fuel assemblies/elements manufactured by the same or other vendors but bounded by the design characteristics listed in Table 1.4.4-3 are also acceptable.
No. of Intact assemblies/elements	≤ 180 per cask
THERMAL/RADIOLOGICAL PARAMETERS: Fuel Assemblies/Element Average Burnup and minimum Cooling Time	Per Table 1.4.4-4 for standard fuel assemblies/ elements and Per Table 1.4.4-5 for follower control rods
Decay Heat (maximum)	8 watts per assembly/element
Minimum B10 Content in the Poison Plates	5.56 mg/cm^2

Table 1.4.4-2
TRIGA Standard Fuel Assembly/Element Design Characteristics

Assembly/Element Type	**Al Clad**	**ACPR (1)**	**Standard**	**FLIP (2)**	**FLIP (2) LEU-I (3)**	**FLIP(2) LEU-II (3)**
Element ID	T-01	T-02	T-03	T-04	T-05	T-06
Fuel Material	U-ZrH	U-ZrH	U-ZrH	U-ZrH	U-ZrH	U-ZrH
^{235}U in U (wt. %)	≤ 20	≤ 20	≤ 20	≤ 70	≤ 20	≤ 20
^{235}U-Mass (g)	≤ 41	≤ 56	≤ 41	≤ 137	≤ 101	≤ 169
Active Fuel Length (inch)	≤ 15	≤ 15	≤ 15	≤ 15	≤ 15	≤ 15
Pellet Diameter (inch)	≤ 1.41	≤ 1.41	≤ 1.44	≤ 1.44	≤ 1.44	≤ 1.44
Clad Material	Al	SS304	SS304	SS304	SS304	SS304

Notes:
1. Annular Core Pulse Reactor
2. FLIP - Fuel Life Improvement Program
3. LEU - Low Enriched Uranium

Table 1.4.4-3
TRIGA Fuel Follower Control Rods Design Characteristics

Assembly/Element Type	**Standard**	**FLIP (2) LEU-I (3)**	**ACPR (1)**
Element ID	T-07	T-08	T-09
Fuel Material	U-ZrH	U-ZrH	U-ZrH
^{235}U in U (wt. %)	≤ 20	≤ 20	≤ 20
^{235}U-Mass (g)	≤ 38	≤ 97	≤ 56
Active Fuel Length (inch)	≤ 15	≤ 15	≤ 15
Pellet Diameter (inch)	≤ 1.32	≤ 1.32	≤ 1.32
Clad Material	SS304	SS304	SS304

Notes:
1. Annular Core Pulse Reactor
2. FLIP - Fuel Life Improvement Program
3. LEU - Low Enriched Uranium

Table 1.4.4-4
TRIGA Fuel Qualification for Standard Fuel Assembly/Elements

Element ID	Burnup (MWD/MTU)	Decay Time (days)
T-01	35,750	400
	71,500	560
	107,250	640
	143,000	710
T-02	35,750	650
	71,500	970
	107,250	1310
	143,000	1870
T-03	35,750	520
	71,500	840
	107,250	1170
	143,000	1730
T-04	112,500	1000
	225,000	1380
	337,500	1820
	450,000	2520
T-05	35,750	920
	71,500	1290
	107,250	1710
	143,000	2360
T-06	36,500	1190
	73,000	1690
	109,500	2320
	146,000	3170

Note: The explanatory notes and limitations regarding the use of this table follow Table 1.4.4-5.

Table 1.4.4-5
TRIGA Fuel Qualification for Fuel Follower Control Rods

Element ID	Burnup (MWD/MTU)	Decay Time (days)
T-07	35,750	540
	71,500	890
	107,250	1280
	143,000	1960
T-08	35,750	940
	71,500	1350
	107,250	1840
	143,000	2580
T-09	35,750	670
	71,500	1020
	107,250	1420
	143,000	2100

Notes: Table 1.4.4-4 and Table 1.4.4-5:

- Use burnup (MWD/MTU) and Element ID to look-up minimum cooling time in years. Licensee is responsible for ensuring that uncertainties in are burnup applied conservatively.
- Fuel with a burnup greater than 150,000 MWD/MTU is unacceptable for transport except for T-04 Type element where the limit is 450,000 MWD/MTU.
- Because only a limited number of burnup points are listed in Table 1.4.4-4 and Table 1.4.4-5, burnups may be either rounded up to the next higher burnup or linear interpolation may be used to determine the minimum cooling time. However, for conservatism, an additional cooling time of 30 days must be added to any linearly interpolated value.
- Example: A T-03 element with a burnup of 100,000 MWD/MTU is acceptable for transport after 1170 days cooling time as defined by 107,250 MWD/MTU (Table 1.4.4-4, rounding up) on the qualification table (when linear interpolation is not employed). When linear interpolation is employed the minimum required cooling time is 1133 days (1103 days based on interpolation + 30 days additional cooling time).

Appendix 1.4.5
TN-LC-1FA Basket

TABLE OF CONTENTS

1.4.5.1 TN-LC-1FA Basket Description 1.4.5-1
1.4.5.2 TN-LC-1FA Basket Contents 1.4.5-2
1.4.5.2.1 PWR Fuel Assemblies 1.4.5-2
1.4.5.2.2 BWR Fuel Assemblies 1.4.5-2
1.4.5.2.3 Fuel Rods in the 1FA 25 Pin Can 1.4.5-2
1.4.5.3 References 1.4.5-4

LIST OF TABLES

Table 1.4.5-1 PWR Fuel Specification for the Fuel[(1)(2)] to be Transported in the TN-LC-1FA Basket (UO_2 Fuel) 1.4.5-5
Table 1.4.5-2 PWR Fuel Assembly Design Characteristics for Transportation in the TN-LC-1FA Basket 1.4.5-6
Table 1.4.5-3 Irradiated EPR Fuel Rod Parameters 1.4.5-6
Table 1.4.5-4 Summary of PRA Requirements for PWR Fuel Assembly Classes 1.4.5-7
Table 1.4.5-5 Specification for the MOX Fuel Rods to be Transported in the TN-LC-1FA Basket (MOX Fuel) 1.4.5-8
Table 1.4.5-6 Fuel Specification for the BWR Fuel[(1)] to be Transported in the in the TN-LC-1FA Basket (UO_2 Fuel) 1.4.5-9
Table 1.4.5-7 BWR Fuel Assembly Design Characteristics[(1)] for Transportation in the TN-LC-1FA Basket 1.4.5-10
Table 1.4.5-8 Fuel Qualification Table for a PWR Fuel Assembly 1.4.5-11
Table 1.4.5-9 Fuel Qualification Table for a BWR Fuel Assembly 1.4.5-15
Table 1.4.5-10 Fuel Qualification Table for 25 PWR/EPR Fuel Rods (UO_2) 1.4.5-19
Table 1.4.5-11 Fuel Qualification Table for 9 PWR/EPR Fuel Rods (UO_2) 1.4.5-20
Table 1.4.5-12 Fuel Qualification Table for 25 BWR Fuel Rods (UO_2) 1.4.5-21
Table 1.4.5-13 Fuel Qualification Table for 9 BWR Fuel Rods (UO_2) 1.4.5-27
Table 1.4.5-14 Fuel Qualification Table for MOX PWR/BWR 25 Rods and MOX PWR/BWR 9 Rods 1.4.5-28

LIST OF FIGURES

Figure 1.4.5-1 PRA Insertion Locations for WE 14x14 Class Assemblies 1.4.5-30
Figure 1.4.5-2 PRA Insertion Locations for WE 15x15 Class Assemblies 1.4.5-31
Figure 1.4.5-3 PRA Insertion Locations for BW 15x15 Class Assemblies 1.4.5-32
Figure 1.4.5-4 PRA Insertion Locations for BW 17x17 and WE 17x17 Class Assemblies 1.4.5-33
Figure 1.4.5-5 Poison Rod Assemblies (PRAs) 1.4.5-34

Appendix 1.4.5
TN-LC-1FA Basket

NOTE: References in this Appendix are shown as [1], [2], etc. and refer to the reference list in Section 1.4.5.3.

1.4.5.1 TN-LC-1FA Basket Description

The TN-LC cask is designed to contain the TN-LC-1FA basket assembly, with either (a) one fuel assembly (PWR or BWR) or (b) one 25 pin can with up to twenty-five fuel rods (and spacers) while remaining completely supported by the transport cask.

The basket structure is designed, fabricated and inspected in accordance with ASME B&PV Code Subsection NG [1]. Alternatives to the code are provided in Chapter 2. The overall length of the basket is 181.5 in. and has a diameter of 17.5 in. The details of the TN-LC-1FA basket are shown on drawing 65200-71-90, 65200-71-96 and 65200-71-102 in Chapter 1, Appendix 1.4.1.

The PWR basket structure consists of a thick square-shaped welded tube assembly which is attached to the solid aluminum support rails. The poison plate is sandwiched between each rail and frame on all four sides of the compartment. The BWR compartment, which slides inside the PWR compartment (to accommodate the smaller cross section of a BWR assembly), is comprised of a 17.5 inch long hold-down ring and a 164 inch long BWR sleeve. The hold-down ring is designed for BWR fuel assembly loading to provide lateral clearance for a fuel grapple, if necessary. After fuel loading, the hold-down ring is installed to provide continuous transfer of basket loads to the cask.

The minimum B10 aerial density of the poison plate is 16.7 mg/cm^2 if boron aluminum alloy or metal matrix composite (MMC) is used. The minimum B10 aerial density of the poison plate is 20.0 mg/cm^2 if Boral® is used.

The basket structure is open at each end. Therefore, longitudinal fuel assembly or fuel pin can loads are applied directly to the cask body and not the fuel basket structure. The fuel assembly or fuel pin can is supported laterally by the stainless steel tube assembly. The basket is supported laterally by the basket rails and the cask shell. The solid aluminum basket rails are oriented parallel to the axis of the cask and are attached to the periphery of the basket to provide support and to establish and maintain basket orientation.

The 25 pin can is a welded 5x5 square array of stainless steel 1 in. tubes which are wrapped in a stainless steel plate and slides inside the BWR basket. The 25 pin can has a lead filled plug at the bottom which fits into the TN-LC cask when the cask bottom end gamma shield plug is removed. This shield plug is designed to reduce radiation exposure to personnel during manual insertion or removal of a loaded 1FA basket in facilities with a hot cell designed for such fuel transfers. The top of the 25 pin can has a bolted closure lid. The closure lid has an integral lifting handle to allow handling of the 25 pin can.

A shear key, welded to the inner wall of the cask, mates with a notch in a basket support rail to prevent the basket from rotating during normal operations.

The maximum allowable heat load for the TN-LC cask with TN-LC-1FA basket is 3.0 kW.

1.4.5.2 TN-LC-1FA Basket Contents

The TN-LC-1FA basket has three different types of payload: PWR fuel assemblies, BWR fuel assemblies, and fuel rods from PWR, BWR, MOX, and EPR fuel assemblies.

1.4.5.2.1 PWR Fuel Assemblies

The TN-LC-1FA basket is designed to transport one intact PWR fuel assembly, as specified in Table 1.4.5-1. The PWR fuel qualification table (FQT) is provided in Table 1.4.5-8. The fuel to be transported is limited to a maximum assembly average initial enrichment of 5.0 wt percent ^{235}U except for CE 15x15 class assemblies (maximal assembly initial enrichment of 3.7 wt percent ^{235}U). The maximum assembly average burnup is limited to 62 GWD/MTU. The maximum allowable heat load for the TN-LC-1FA basket loaded with a PWR fuel assembly is 3.0 kW.

In addition to the poison plates provided in the basket, Poison Rod Assemblies (PRAs) are required while transporting PWR fuel assemblies in order to ensure that the maximum reactivity is subcritical and below the Upper Subcritical Limit (USL). The PRAs consist of a cluster of absorber rods containing B_4C pellets inserted into the guide tubes of the fuel assembly. A typical PRA is illustrated in Figure 1.4.5-5. The minimum required B_4C content of the absorber rods in the PRA is 40 percent Theoretical Density (TD) (75 percent credit is taken in the criticality analysis, or 30 percent TD). A summary of the number of absorber rods required in the PRA for each PWR fuel class is shown in Table 1.4.5-4. PRA loading configurations are also illustrated in Figure 1.4.5-1 through Figure 1.4.5-4.

1.4.5.2.2 BWR Fuel Assemblies

The TN-LC-1FA basket is designed to transport one intact BWR fuel assembly as specified in Table 1.4.5-6. Basket cell sleeves are used to reduce the area within the 1FA basket for BWR fuel. The BWR FQT is provided in Table 1.4.5-9. The fuel to be transported is limited to a maximum assembly average initial enrichment of 5.0 wt. percent ^{235}U. The maximum allowable assembly average burnup is limited to 62 GWD/MTU. The maximum allowable heat load for the TN-LC-1FA basket loaded with a BWR fuel assembly is 2.0 kW.

1.4.5.2.3 Fuel Rods in the 1FA 25 Pin Can

The TN-LC-1FA basket is designed to transport up to 25 intact light water reactor fuel rods in 25 pin can. This includes irradiated PWR, BWR, MOX, and EPR fuel rods. The maximum peak burnup for fuel rods is 90 GWD/MTU. Two designs are available, with cavity lengths of 179.5 in. and 168.5 in. The 25 pin can with the shorter cavity length is heavily shielded with lead at the ends, while the 25 pin can with the longer cavity length does not feature axial lead shielding. The longer cavity pin can is used only for EPR pins, which are much longer than a standard fuel rod (an EPR rod is approximately 179.24 in. long). All other rods are transported in the shorter cavity 25 pin can.

PWR and BWR intact fuel rods may be from any of the fuel assemblies listed in Table 1.4.5-1 or Table 1.4.5-6, respectively. The 25 pin can may transport up to 25 fuel rods, although the

cooling times are reduced if 9 or less rods are transported. When transporting 9 or less rods, the rods shall be placed in the center 3x3 region of the pin can. PWR rod FQTs are shown in Table 1.4.5-10 and Table 1.4.5-11 for the 25 and 9 rod configurations, respectively. BWR rod FQTs are shown in Table 1.4.5-12 and Table 1.4.5-13 for the 25 and 9 rod configurations, respectively.

MOX rods have the same geometry as PWR or BWR rods, as defined in Table 1.4.5-1 and Table 1.4.5-5, although with a different fuel composition. The composition of MOX fuel is specified in Table 1.4.5-6.

The MOX rod FQT is provided in Table 1.4.5-14 for both 25 and 9 rods. The MOX rod FQT is applicable to both BWR and PWR MOX rods.

EPR rods may be either standard (UO_2) or MOX. Standard EPR rods have a uranium loading of 0.0020 MTU/rod, which is bounded by the B&W 15x15 Mark B10 rod listed in Table 1.4.5-1. Therefore, standard EPR rods are governed by the PWR rod FQTs (Table 1.4.5-10 and Table 1.4.5-11), while MOX EPR rods are governed by the MOX rod FQTs (Table 1.4.5-14).

Solid stainless steel spacers are inserted into the tubes prior to fuel rod loading to leave approximately 2 in. of each fuel rod protruding above the top of the base 5x5 array of tubes in the 25 pin can assembly to allow handling.

The maximum allowable heat load for TN-LC cask with TN-LC-1FA basket loaded with fuel rods in the 25 pin can is 3.0 kW (120 watts per rod) for the 25 rod option and 1.98 kW (220 watts per rod) for the 9 rod option.

1.4.5.3 References

1. American Society of Mechanical Engineers, ASME Boiler and Pressure Vessel Code, Section III, Division 1 - Subsection NG 2004 with Addenda through 2006.

Table 1.4.5-1
PWR Fuel Specification for the Fuel[(1)(2)] to be Transported in the TN-LC-1FA Basket (UO_2 Fuel)

PHYSICAL PARAMETERS: Fuel Class	Intact unconsolidated B&W 17x17, WE 17x17, CE 16x16, B&W 15x15, WE 15x15, CE 15x15 WE 14x14, and CE 14x14 class PWR assemblies (without control components) that are enveloped by the fuel assembly design characteristics listed in Table 1.4.5-2. Reload fuel manufactured by the same or other vendors but enveloped by the design characteristics listed in Table 1.4.5-2 is also acceptable.
Maximum Assembly + PRA Weight	1850 lbs
Maximum Initial Uranium Content[(4)]	490 kg/assembly
Maximum Unirradiated Assembly Length	178.3 inches
THERMAL/RADIOLOGICAL PARAMETERS: Fuel Assembly Average Burnup, Enrichment and Minimum Cooling Time	Per Table 1.4.5-8
Maximum Initial Assembly Average Enrichment	5.0[(3)] wt.% U-235
Maximum Decay Heat[(5)]	3.0 kW per Assembly
Minimum B10 content in poison plates loading	• 16.7 mg/cm^2 (Natural or Enriched Boron Aluminum Alloy / Metal Matrix Composite (MMC)) • 20.0 mg/cm^2 (Boral®)
Minimum number of absorber rods per PRA as a function of assembly class	Per Table 1.4.5-4

Notes:
1. Up to 25 PWR fuel rods from any of the PWR fuel assemblies listed in Table 1.4.5-2 may also be transported in the TN-LC-1FA basket in 25 pin can. The fuel rods are loaded in a 25 pin can with a cavity length of 168.5 inches (Option 3) which is placed within the LC-1FA basket. The maximum peak burnup for the fuel rods is 90 GWD/MTU. The required cooling time as a function of a PWR fuel rod burnup and enrichment are provided in Table 1.4.5-10 for 25 rods and Table 1.4.5-11 for 9 rods, respectively.
2. Up to 25 EPR fuel rods from any of the fuel class listed in Table 1.4.5-2 and meeting EPR rod parameters specified in Table 1.4.5-3 may also be transported in the TN-LC-1FA cask. The fuel rods are loaded in a 25 pin can with a cavity length of 179.5 inches (Option 1 and Option 2) which is placed within the LC-1FA basket. The maximum peak burnup for the fuel rods is 90 GWD/MTU. The required cooling time as a function of an EPR fuel rod burnup and enrichment are provided in Table 1.4.5-10 for 25 rods and Table 1.4.5-11 for 9 rods, respectively.
3. For CE 15x15, the maximum enrichment is 3.70 wt. %
4. The maximum initial uranium content is based on the shielding analysis. The listed value is higher than the actual.
5. The maximum decay heat per rod is 220 watts when loading up to 9 rods. The maximum decay heat per rod is 120 watts when loading 10 or more (up to 25) rods.

Table 1.4.5-2
PWR Fuel Assembly Design Characteristics for Transportation in the TN-LC-1FA Basket

Assembly Class	**B&W 15x15**	**B&W 17x17**	**WE 17x17**	**CE 15x15**	**WE 15x15**	**CE 14x14**	**WE 14x14**	**CE 16x16**
Maximum Number of Fuel Rods	208	264	264	216	204	176	179	236
Maximum Number of Guide/Instrument Tubes	17	25	25	9	21	5	17	5

Table 1.4.5-3
Irradiated EPR Fuel Rod Parameters

Parameter	**Value**
Maximum Unirradiated Length	179.5 inches
Cladding	M5 / Zirconium based alloy
Cladding Thickness	Nominal 0.022 inch
Maximum Initial Uranium Content	2 kgU/rod

Table 1.4.5-4
Summary of PRA Requirements for PWR Fuel Assembly Classes

Assembly Class	Number of Absorber Rods in PRAs and Locations	Diameter of B_4C Absorber (cm)	Minimum B_4C Content (g/cm)
WE 17x17	8, Per Figure 1.4.5-4	0.88	0.613
CE 16x16	5, All Guide Tubes	1.02	0.824
BW 15x15	8, Per Figure 1.4.5-3	0.88	0.613
CE 15x15	1, Center Guide Tube	0.76	0.475
WE 15x15	8, Per Figure 1.4.5-2	0.88	0.613
CE 14x14	5, All Guide Tubes	0.88	0.613
WE 14x14	8, Per Figure 1.4.5-1	0.88	0.613
BW 17x17	8, Per Figure 1.4.5-4	0.76	0.475

Table 1.4.5-5
Specification for the MOX Fuel Rods to be Transported in the TN-LC-1FA Basket (MOX Fuel)

PHYSICAL PARAMETERS:	• Up to 25 PWR MOX fuel rods with physical parameters as those listed in Table 1.4.5-1. • Up to 25 BWR MOX fuel rods with physical parameters as those listed in Table 1.4.5-6. • Up to 25 EPR MOX fuel rods with physical parameters as those listed in Table 1.4.5-3.
Fissile Material	UO_2, PuO_2 (Mixed Oxide or MOX)
Heavy Metal (HM) Content	$\leq$ 2.5 kgU/rod
CRITICALITY PARAMETERS Initial MOX composition:	• U-235 Content in UO_2: $0.5 \leq$ U-235 ≤ 0.7 wt. % • Plutonium Content: Pu / (U + Pu) ≤ 7.0 wt. % • Initial Pu-239 Content in PuO_2 ≤ 60.0 wt. % • Initial Pu-241 Content in PuO_2 ≤ 7.5 wt. %
THERMAL/RADIOLOGICAL PARAMETERS: Initial MOX Composition for Fuel Qualification Burnup and Minimum cooling time for MOX rods	• Pu-238 / Pu-239 ≤ 4.0 wt. % • $40 \leq$ Pu-239/ $PuO_2 > 40$ wt. % • Am-241 / $PuO_2 \leq 0.075$ wt. % Per Table 1.4.5-14
Maximum Decay heat per 25 pin can	• 3.0 kW for the 25 pin can with up to 25 rods • 1.98 kW for the 25 pin can with up to 9 rods
Minimum B10 content in poison plates loading	• 16.7 mg/cm2 (Natural or Enriched Boron Aluminum Alloy / Metal Matrix Composite (MMC) • 20.0 mg/cm2 (Boral®)

Table 1.4.5-6
Fuel Specification for the BWR Fuel[1] to be Transported in the in the TN-LC-1FA Basket (UO_2 Fuel)

PHYSICAL PARAMETERS: Fuel Class[1]	Intact 7x7, 8x8, 9x9 or 10x10 BWR assemblies manufactured by General Electric or Exxon/ANF or FANP or ABB or reload fuel manufactured by same or other vendors that are enveloped by the fuel assembly design characteristics listed in Table 1.4.5-7.
Channels	Fuel may be transported with or without channels, channel fasteners, or finger springs.
Fissile Material	UO_2
Maximum Assembly Weight with Channels	790 lbs
Maximum Unirradiated Assembly Length	176.6 inches
THERMAL/RADIOLOGICAL PARAMETERS: Maximum Initial Lattice Average Enrichment	5.0 wt. % U-235
Fuel Assembly Average Burnup, Enrichment and Minimum Cooling Time	Per Table 1.4.5-9
Maximum Decay Heat[2]	2.0 kW per Assembly
Minimum B10 Content in Poison Plates	• 16.7 mg/cm^2 (Natural or Enriched Boron Aluminum Alloy / Metal Matrix Composite (MMC) • 20.0 mg/cm^2 (Boral®)

Notes:

1. Up to 25 fuel rods from any of the BWR fuel assemblies listed in Table 1.4.5-7 may also be transported in the TN-LC-1FA basket in the 25 pin can. The fuel rods are loaded in a 25 pin can with a cavity length of 168.5 inches which is placed within the TN-LC-1FA basket. The required cooling time as a function of BWR fuel rod burnup and enrichment are provided in Table 1.4.5-12 for 25 rods and Table 1.4.5-13 for 9 rods respectively.
2. The maximum decay heat per rod is 220 watts when loading up to 9 rods. The maximum decay heat per rod is 120 watts when loading 10 or more (up to 25) rods.

Table 1.4.5-7
BWR Fuel Assembly Design Characteristics[1] for Transportation in the TN-LC-1FA Basket

Transnuclear ID	Initial Design or Reload Fuel Designation	Maximum No. of Fuel Rods	Maximum Initial Uranium Content (kg)
7x7-49/0	GE1 GE2 GE3	49	198
8x8-63/1	GE4	63	192
8x8-62/2	GE-5 GE-Pres GE-Barrier GE8 Type I	62	192
8x8-60/4	GE8 Type II	60	192
8x8-60/1	GE9 GE10	60	192
9x9-74/2	GE11 GE13	74	192
10x10-92/2	GE12 GE14	92	192
7x7-49/0	ENC-IIIA	49	198
7x7-48/1Z	ENC-III[2]	48	198
8x8-60/4Z	ENC Va ENC Vb	60	192
8x8-62/2	FANP 8x8-2	62	192
FANP 9x9	FANP9 9x9[3]	81	192
Siemens QFA	9x9	72	192
10x10-91/1	ATRIUM 10, ATRIUM 10XM	91	192
ABB-8x8	SVEA-64	64	192
ABB-10x10	SVEA-100[4]	100	192
LaCrosse	Allis Chalmers-10x10 Exxon/ANF 10x10	100	125

Notes:
(1) Any fuel channel average thickness up to 0.120 inch is acceptable on any of the fuel designs.
(2) Includes ENC-IIIE and ENC-IIIF.
(3) Includes FANP 9x9-72, 9x9-79, 9x9-80, and 9x9-81.
(4) Includes SVEA-92, SVEA-96, SVEA-96+, SVEA-96 OPTIMA, SVEA-96 OPTIMA 2.

Table 1.4.5-8
Fuel Qualification Table for a PWR Fuel Assembly

(Part 1 of 4)

(Minimum required years of cooling time after reactor core discharge)

Burnup, GWD/MTU	Enrichment, wt. % U-235																				
	0.9	1.0	1.1	1.2	1.3	1.4	1.5	1.6	1.7	1.8	1.9	2.0	2.1	2.2	2.3	2.4	2.5	2.6	2.7	2.8	2.9
6	1.7	1.7	1.7	1.6	1.6	1.6	1.6	1.6	1.6	1.6	1.6	1.6	1.6	1.6	1.6	1.6	1.6	1.6	1.5	1.5	1.5
7	1.9	1.9	1.8	1.8	1.8	1.8	1.8	1.8	1.8	1.8	1.8	1.7	1.7	1.7	1.7	1.7	1.7	1.7	1.7	1.7	1.7
8	2.0	2.0	2.0	2.0	2.0	2.0	1.9	1.9	1.9	1.9	1.9	1.9	1.9	1.9	1.9	1.9	1.9	1.9	1.9	1.8	1.8
9	2.2	2.2	2.1	2.1	2.1	2.1	2.1	2.1	2.1	2.0	2.0	2.0	2.0	2.0	2.0	2.0	2.0	2.0	2.0	2.0	2.0
10	2.3	2.3	2.3	2.3	2.2	2.2	2.2	2.2	2.2	2.2	2.2	2.1	2.1	2.1	2.1	2.1	2.1	2.1	2.1	2.1	2.1
11	2.5	2.4	2.4	2.4	2.4	2.3	2.3	2.3	2.3	2.3	2.3	2.2	2.2	2.2	2.2	2.2	2.2	2.2	2.2	2.2	2.2
12	2.6	2.6	2.5	2.5	2.5	2.4	2.4	2.4	2.4	2.4	2.4	2.4	2.3	2.3	2.3	2.3	2.3	2.3	2.3	2.3	2.3
13	2.8	2.7	2.6	2.6	2.6	2.6	2.5	2.5	2.5	2.5	2.5	2.4	2.4	2.4	2.4	2.4	2.4	2.4	2.4	2.4	2.4
14	2.9	2.8	2.8	2.7	2.7	2.7	2.6	2.6	2.6	2.6	2.6	2.5	2.5	2.5	2.5	2.5	2.5	2.5	2.4	2.4	2.4
15	3.0	2.9	2.9	2.8	2.8	2.8	2.7	2.7	2.7	2.7	2.6	2.6	2.6	2.6	2.6	2.6	2.6	2.5	2.5	2.5	2.5
16	3.2	3.1	3.0	2.9	2.9	2.9	2.8	2.8	2.8	2.7	2.7	2.7	2.7	2.7	2.7	2.6	2.6	2.6	2.6	2.6	2.6
17	3.3	3.2	3.1	3.0	3.0	3.0	2.9	2.9	2.9	2.8	2.8	2.8	2.8	2.8	2.7	2.7	2.7	2.7	2.7	2.7	2.7
18	3.3	3.2	3.1	3.1	3.0	3.0	3.0	2.9	2.9	2.9	2.9	2.8	2.8	2.8	2.8	2.8	2.7	2.7	2.7	2.7	2.7
19	3.4	3.3	3.2	3.2	3.1	3.1	3.1	3.0	3.0	3.0	2.9	2.9	2.9	2.9	2.9	2.8	2.8	2.8	2.8	2.8	2.8
20	3.5	3.4	3.3	3.3	3.2	3.2	3.2	3.1	3.1	3.1	3.0	3.0	3.0	3.0	2.9	2.9	2.9	2.9	2.9	2.8	2.8
21	3.6	3.5	3.4	3.4	3.3	3.3	3.3	3.2	3.2	3.1	3.1	3.1	3.1	3.0	3.0	3.0	3.0	2.9	2.9	2.9	2.9
22	3.7	3.6	3.6	3.5	3.4	3.4	3.4	3.3	3.3	3.2	3.2	3.2	3.1	3.1	3.1	3.1	3.0	3.0	3.0	3.0	3.0
23	3.8	3.8	3.7	3.6	3.6	3.5	3.5	3.4	3.4	3.3	3.3	3.3	3.2	3.2	3.2	3.1	3.1	3.1	3.1	3.1	3.0
24	4.0	3.9	3.8	3.7	3.7	3.6	3.6	3.5	3.5	3.4	3.4	3.3	3.3	3.3	3.2	3.2	3.2	3.2	3.1	3.1	3.1
25	4.1	4.0	3.9	3.9	3.8	3.7	3.7	3.6	3.6	3.5	3.5	3.4	3.4	3.4	3.3	3.3	3.3	3.2	3.2	3.2	3.2
26	4.3	4.2	4.1	4.0	3.9	3.8	3.8	3.7	3.7	3.6	3.6	3.5	3.5	3.4	3.4	3.4	3.3	3.3	3.3	3.3	3.2
27	4.5	4.3	4.2	4.1	4.0	4.0	3.9	3.8	3.8	3.7	3.7	3.6	3.6	3.5	3.5	3.5	3.4	3.4	3.4	3.3	3.3
28	4.7	4.5	4.4	4.3	4.2	4.1	4.0	4.0	3.9	3.8	3.8	3.7	3.7	3.6	3.6	3.6	3.5	3.5	3.4	3.4	3.4
29	4.9	4.7	4.6	4.4	4.3	4.2	4.2	4.1	4.0	3.9	3.9	3.8	3.8	3.7	3.7	3.6	3.6	3.6	3.5	3.5	3.5
30	5.0	4.8	4.7	4.6	4.4	4.3	4.3	4.2	4.1	4.0	4.0	3.9	3.8	3.8	3.7	3.7	3.7	3.6	3.6	3.5	3.5
31	5.2	5.0	4.9	4.7	4.6	4.5	4.4	4.3	4.2	4.2	4.1	4.0	4.0	3.9	3.8	3.8	3.8	3.7	3.7	3.6	3.6
32									4.4	4.3	4.2	4.1	4.1	4.0	4.0	3.9	3.9	3.8	3.8	3.7	3.7
33									4.5	4.5	4.4	4.3	4.2	4.1	4.1	4.0	4.0	3.9	3.9	3.8	3.8
34									4.7	4.6	4.5	4.4	4.3	4.3	4.2	4.1	4.1	4.0	4.0	3.9	3.9

Table 1.4.5-8
Fuel Qualification Table for a PWR Fuel Assembly

(Part 2 of 4)

(Minimum required years of cooling time after reactor core discharge)

Burnup, GWD/MTU	Enrichment, wt. % U-235																				
	3.0	3.1	3.2	3.3	3.4	3.5	3.6	3.7	3.8	3.9	4.0	4.1	4.2	4.3	4.4	4.5	4.6	4.7	4.8	4.9	5.0
6	1.5	1.5	1.5	1.5	1.5	1.5	1.5	1.5	1.5	1.5	1.5	1.5	1.5	1.5	1.5	1.5	1.5	1.5	1.5	1.5	1.5
7	1.7	1.7	1.7	1.7	1.7	1.7	1.7	1.7	1.7	1.7	1.7	1.7	1.7	1.7	1.7	1.7	1.7	1.7	1.7	1.7	1.7
8	1.8	1.8	1.8	1.8	1.8	1.8	1.8	1.8	1.8	1.8	1.8	1.8	1.8	1.8	1.8	1.8	1.8	1.8	1.8	1.8	1.8
9	2.0	2.0	1.9	1.9	1.9	1.9	1.9	1.9	1.9	1.9	1.9	1.9	1.9	1.9	1.9	1.9	1.9	1.9	1.9	1.9	1.9
10	2.1	2.1	2.1	2.1	2.0	2.0	2.0	2.0	2.0	2.0	2.0	2.0	2.0	2.0	2.0	2.0	2.0	2.0	2.0	2.0	2.0
11	2.2	2.2	2.2	2.1	2.1	2.1	2.1	2.1	2.1	2.1	2.1	2.1	2.1	2.1	2.1	2.1	2.1	2.1	2.1	2.1	2.1
12	2.3	2.3	2.2	2.2	2.2	2.2	2.2	2.2	2.2	2.2	2.2	2.2	2.2	2.2	2.2	2.2	2.2	2.2	2.2	2.2	2.2
13	2.3	2.3	2.3	2.3	2.3	2.3	2.3	2.3	2.3	2.3	2.3	2.3	2.3	2.3	2.3	2.3	2.3	2.3	2.3	2.3	2.2
14	2.4	2.4	2.4	2.4	2.4	2.4	2.4	2.4	2.4	2.4	2.4	2.4	2.3	2.3	2.3	2.3	2.3	2.3	2.3	2.3	2.3
15	2.5	2.5	2.5	2.5	2.5	2.5	2.5	2.4	2.4	2.4	2.4	2.4	2.4	2.4	2.4	2.4	2.4	2.4	2.4	2.4	2.4
16	2.6	2.6	2.6	2.5	2.5	2.5	2.5	2.5	2.5	2.5	2.5	2.5	2.5	2.5	2.5	2.5	2.5	2.5	2.5	2.5	2.4
17	2.6	2.6	2.6	2.6	2.6	2.6	2.6	2.6	2.6	2.6	2.6	2.6	2.5	2.5	2.5	2.5	2.5	2.5	2.5	2.5	2.5
18	2.7	2.7	2.7	2.6	2.6	2.6	2.6	2.6	2.6	2.6	2.6	2.6	2.6	2.6	2.6	2.6	2.5	2.5	2.5	2.5	2.5
19	2.7	2.7	2.7	2.7	2.7	2.7	2.7	2.7	2.7	2.7	2.6	2.6	2.6	2.6	2.6	2.6	2.6	2.6	2.6	2.6	2.6
20	2.8	2.8	2.8	2.8	2.8	2.8	2.7	2.7	2.7	2.7	2.7	2.7	2.7	2.7	2.7	2.7	2.7	2.7	2.7	2.6	2.6
21	2.9	2.9	2.9	2.8	2.8	2.8	2.8	2.8	2.8	2.8	2.8	2.8	2.7	2.7	2.7	2.7	2.7	2.7	2.7	2.7	2.7
22	3.0	2.9	2.9	2.9	2.9	2.9	2.9	2.9	2.8	2.8	2.8	2.8	2.8	2.8	2.8	2.8	2.8	2.8	2.8	2.8	2.7
23	3.0	3.0	3.0	3.0	3.0	2.9	2.9	2.9	2.9	2.9	2.9	2.9	2.9	2.9	2.8	2.8	2.8	2.8	2.8	2.8	2.8
24	3.1	3.1	3.0	3.0	3.0	3.0	3.0	3.0	3.0	3.0	2.9	2.9	2.9	2.9	2.9	2.9	2.9	2.9	2.9	2.9	2.8
25	3.2	3.1	3.1	3.1	3.1	3.1	3.0	3.0	3.0	3.0	3.0	3.0	3.0	3.0	3.0	2.9	2.9	2.9	2.9	2.9	2.9
26	3.2	3.2	3.2	3.2	3.1	3.1	3.1	3.1	3.1	3.1	3.1	3.0	3.0	3.0	3.0	3.0	3.0	3.0	3.0	3.0	2.9
27	3.3	3.3	3.2	3.2	3.2	3.2	3.2	3.2	3.1	3.1	3.1	3.1	3.1	3.1	3.1	3.0	3.0	3.0	3.0	3.0	3.0
28	3.4	3.3	3.3	3.3	3.3	3.3	3.2	3.2	3.2	3.2	3.2	3.2	3.1	3.1	3.1	3.1	3.1	3.1	3.1	3.1	3.0
29	3.4	3.4	3.4	3.4	3.3	3.3	3.3	3.3	3.3	3.2	3.2	3.2	3.2	3.2	3.2	3.2	3.1	3.1	3.1	3.1	3.1
30	3.5	3.4	3.4	3.4	3.4	3.3	3.3	3.3	3.3	3.3	3.2	3.2	3.2	3.2	3.2	3.2	3.2	3.1	3.1	3.1	3.1
31	3.6	3.5	3.5	3.5	3.4	3.4	3.4	3.4	3.4	3.3	3.3	3.3	3.3	3.3	3.2	3.2	3.2	3.2	3.2	3.2	3.2
32	3.6	3.6	3.6	3.6	3.5	3.5	3.5	3.4	3.4	3.4	3.4	3.4	3.3	3.3	3.3	3.3	3.3	3.3	3.2	3.2	3.2
33	3.7	3.7	3.7	3.6	3.6	3.6	3.5	3.5	3.5	3.5	3.4	3.4	3.4	3.4	3.4	3.4	3.3	3.3	3.3	3.3	3.3
34	3.8	3.8	3.8	3.7	3.7	3.7	3.6	3.6	3.6	3.5	3.5	3.5	3.5	3.5	3.4	3.4	3.4	3.4	3.4	3.3	3.3

Table 1.4.5-8
Fuel Qualification Table for a PWR Fuel Assembly

(Part 3 of 4)

(Minimum required years of cooling time after reactor core discharge)

Burnup, GWD/MTU	Enrichment, wt. % U-235																				
	3.0	3.1	3.2	3.3	3.4	3.5	3.6	3.7	3.8	3.9	4.0	4.1	4.2	4.3	4.4	4.5	4.6	4.7	4.8	4.9	5.0
35									4.9	4.8	4.7	4.6	4.5	4.4	4.3	4.3	4.2	4.1	4.1	4.0	4.0
36											4.9	4.8	4.7	4.6	4.5	4.4	4.4	4.3	4.2	4.2	4.1
37											5.1	5.0	4.9	4.8	4.7	4.6	4.5	4.5	4.4	4.3	4.3
38											5.3	5.2	5.1	5.0	4.9	4.8	4.7	4.6	4.5	4.5	4.4
39											5.6	5.5	5.3	5.2	5.1	5.0	4.9	4.8	4.7	4.6	4.6
40																		5.0	4.9	4.8	4.7
41																		5.2	5.1	5.0	4.9
42																		5.4	5.3	5.2	5.1
43																		5.6	5.5	5.4	5.3
44																		5.9	5.8	5.6	5.5
45																		6.2	6.0	5.9	5.7
46																		6.5	6.3	6.1	6.0
47																		6.8	6.6	6.4	6.3
48																		7.1	6.9	6.7	6.6
49																		7.5	7.3	7.1	6.9
50																		7.9	7.6	7.4	7.2
51																		8.3	8.0	7.8	7.6
52																		8.7	8.5	8.2	7.9
53																		9.2	8.9	8.6	8.4
54																		9.7	9.4	9.1	8.8
55																		10.2	9.9	9.6	9.3
56																		10.8	10.5	10.1	9.8
57																		11.4	11.0	10.6	10.3
58																		12.0	11.6	11.2	10.9
59																		12.6	12.2	11.8	11.4
60																		13.3	12.8	12.4	12.0
61																		14.0	13.6	13.2	12.6
62																		14.7	14.3	13.7	13.3

Table 1.4.5-8
Fuel Qualification Table for a PWR Fuel Assembly

(Part 4 of 4)

(Minimum required years of cooling time after reactor core discharge)

Burnup, GWD/MTU	Enrichment, wt. % U-235																				
	3.0	3.1	3.2	3.3	3.4	3.5	3.6	3.7	3.8	3.9	4.0	4.1	4.2	4.3	4.4	4.5	4.6	4.7	4.8	4.9	5.0
35	3.9	3.9	3.9	3.8	3.8	3.7	3.7	3.7	3.7	3.6	3.6	3.6	3.5	3.5	3.5	3.5	3.5	3.4	3.4	3.4	3.4
36	4.1	4.0	4.0	3.9	3.9	3.9	3.8	3.8	3.8	3.7	3.7	3.7	3.6	3.6	3.6	3.6	3.6	3.5	3.5	3.5	3.5
37	4.2	4.2	4.1	4.1	4.0	4.0	3.9	3.9	3.9	3.8	3.8	3.8	3.7	3.7	3.7	3.7	3.6	3.6	3.6	3.6	3.6
38	4.3	4.3	4.2	4.2	4.1	4.1	4.1	4.0	4.0	3.9	3.9	3.9	3.8	3.8	3.8	3.8	3.7	3.7	3.7	3.7	3.7
39	4.5	4.4	4.4	4.3	4.3	4.2	4.2	4.1	4.1	4.1	4.0	4.0	4.0	3.9	3.9	3.9	3.8	3.8	3.8	3.8	3.7
40	4.7	4.6	4.5	4.5	4.4	4.4	4.3	4.3	4.2	4.2	4.1	4.1	4.1	4.0	4.0	4.0	3.9	3.9	3.9	3.9	3.8
41	4.8	4.8	4.7	4.6	4.6	4.5	4.4	4.4	4.3	4.3	4.3	4.2	4.2	4.1	4.1	4.1	4.0	4.0	4.0	4.0	3.9
42	5.0	4.9	4.8	4.8	4.7	4.6	4.6	4.5	4.5	4.4	4.4	4.3	4.3	4.3	4.2	4.2	4.2	4.1	4.1	4.1	4.0
43	5.2	5.1	5.0	4.9	4.9	4.8	4.7	4.7	4.6	4.6	4.5	4.5	4.4	4.4	4.3	4.3	4.3	4.2	4.2	4.2	4.1
44	5.4	5.3	5.2	5.1	5.0	5.0	4.9	4.8	4.8	4.7	4.6	4.6	4.5	4.5	4.5	4.4	4.4	4.3	4.3	4.3	4.2
45	5.6	5.5	5.4	5.3	5.2	5.1	5.1	5.0	4.9	4.9	4.8	4.7	4.7	4.6	4.6	4.5	4.5	4.5	4.4	4.4	4.3
46	5.9	5.7	5.6	5.5	5.4	5.3	5.2	5.2	5.1	5.0	4.9	4.9	4.8	4.8	4.7	4.7	4.6	4.6	4.5	4.5	4.5
47	6.1	6.0	5.9	5.7	5.6	5.5	5.4	5.3	5.3	5.2	5.1	5.0	5.0	4.9	4.9	4.8	4.8	4.7	4.7	4.6	4.6
48	6.4	6.2	6.1	6.0	5.8	5.7	5.6	5.5	5.4	5.4	5.3	5.2	5.1	5.1	5.0	5.0	4.9	4.8	4.8	4.7	4.7
49	6.7	6.5	6.4	6.2	6.1	6.0	5.9	5.7	5.6	5.6	5.5	5.4	5.3	5.2	5.2	5.1	5.0	5.0	4.9	4.9	4.8
50	7.0	6.8	6.7	6.5	6.3	6.2	6.1	6.0	5.9	5.8	5.7	5.6	5.5	5.4	5.3	5.3	5.2	5.1	5.1	5.0	5.0
51	7.3	7.1	7.0	6.8	6.6	6.5	6.3	6.2	6.1	6.0	5.9	5.8	5.7	5.6	5.5	5.4	5.4	5.3	5.2	5.2	5.1
52	7.7	7.5	7.3	7.1	6.9	6.8	6.6	6.5	6.3	6.2	6.1	6.0	5.9	5.8	5.7	5.6	5.5	5.5	5.4	5.3	5.3
53	8.1	7.9	7.6	7.4	7.3	7.1	6.9	6.7	6.6	6.5	6.3	6.2	6.1	6.0	5.9	5.8	5.7	5.6	5.6	5.5	5.4
54	8.6	8.3	8.0	7.8	7.6	7.4	7.2	7.0	6.9	6.7	6.6	6.5	6.3	6.2	6.1	6.0	5.9	5.8	5.7	5.7	5.6
55	9.0	8.7	8.4	8.2	8.0	7.7	7.5	7.4	7.2	7.0	6.9	6.7	6.6	6.5	6.3	6.2	6.1	6.0	5.9	5.9	5.8
56	9.4	9.2	8.9	8.6	8.3	8.1	7.9	7.7	7.5	7.3	7.2	7.0	6.9	6.7	6.6	6.5	6.4	6.2	6.1	6.1	6.0
57	9.9	9.7	9.3	9.1	8.8	8.5	8.3	8.1	7.9	7.7	7.5	7.3	7.1	7.0	6.9	6.7	6.6	6.5	6.4	6.3	6.2
58	10.5	10.2	9.8	9.5	9.3	8.9	8.7	8.5	8.2	8.0	7.8	7.6	7.5	7.3	7.1	7.0	6.9	6.7	6.6	6.5	6.4
59	11.0	10.7	10.3	10.0	9.7	9.4	9.1	8.9	8.6	8.4	8.2	8.0	7.8	7.6	7.4	7.3	7.1	7.0	6.9	6.7	6.6
60	11.6	11.3	10.8	10.5	10.2	9.9	9.6	9.3	9.0	8.8	8.6	8.3	8.1	7.9	7.8	7.6	7.4	7.3	7.1	7.0	6.9
61	12.2	11.8	11.4	11.2	10.8	10.4	10.2	9.8	9.6	9.2	9.0	8.8	8.6	8.4	8.2	8.0	7.8	7.6	7.4	7.4	7.2
62	12.9	12.5	12.1	11.7	11.3	10.9	10.7	10.3	9.9	9.7	9.5	9.3	8.9	8.7	8.5	8.3	8.1	7.9	7.7	7.7	7.5

Notes:

1. Explanatory notes and limitations regarding the use of this table follow Table 1.4.5-14.

Table 1.4.5-9
Fuel Qualification Table for a BWR Fuel Assembly

(Part 1 of 4)

(Minimum required years of cooling time after reactor core discharge)

Burnup, GWD/MTU	Enrichment, wt. % U-235																				
	0.9	1.0	1.1	1.2	1.3	1.4	1.5	1.6	1.7	1.8	1.9	2.0	2.1	2.2	2.3	2.4	2.5	2.6	2.7	2.8	2.9
6	0.5	0.5	0.5	0.5	0.5	0.5	0.5	0.5	0.5	0.5	0.5	0.5	0.5	0.5	0.5	0.5	0.5	0.5	0.5	0.5	0.5
7	0.5	0.5	0.5	0.5	0.5	0.5	0.5	0.5	0.5	0.5	0.5	0.5	0.5	0.5	0.5	0.5	0.5	0.5	0.5	0.5	0.5
8	0.6	0.6	0.6	0.6	0.6	0.6	0.6	0.6	0.6	0.6	0.6	0.6	0.6	0.6	0.6	0.6	0.6	0.6	0.6	0.6	0.6
9	0.6	0.6	0.6	0.6	0.6	0.6	0.6	0.6	0.6	0.6	0.6	0.6	0.6	0.6	0.6	0.6	0.6	0.6	0.6	0.6	0.6
10	0.6	0.6	0.6	0.6	0.6	0.6	0.6	0.6	0.6	0.6	0.6	0.6	0.6	0.6	0.6	0.6	0.6	0.6	0.6	0.6	0.6
11	0.6	0.6	0.6	0.6	0.6	0.6	0.6	0.6	0.6	0.6	0.6	0.6	0.6	0.6	0.6	0.6	0.6	0.6	0.6	0.6	0.6
12	0.7	0.7	0.7	0.7	0.7	0.7	0.7	0.7	0.7	0.7	0.7	0.7	0.7	0.7	0.7	0.7	0.6	0.6	0.6	0.6	0.6
13	0.7	0.7	0.7	0.7	0.7	0.7	0.7	0.7	0.7	0.7	0.7	0.7	0.7	0.7	0.7	0.7	0.7	0.7	0.7	0.7	0.7
14	0.7	0.7	0.7	0.7	0.7	0.7	0.7	0.7	0.7	0.7	0.7	0.7	0.7	0.7	0.7	0.7	0.7	0.7	0.7	0.7	0.7
15	0.8	0.8	0.8	0.8	0.7	0.7	0.7	0.7	0.7	0.7	0.7	0.7	0.7	0.7	0.7	0.7	0.7	0.7	0.7	0.7	0.7
16	0.8	0.8	0.8	0.8	0.8	0.8	0.8	0.8	0.8	0.8	0.8	0.8	0.8	0.7	0.7	0.7	0.7	0.7	0.7	0.7	0.7
17	0.9	0.8	0.8	0.8	0.8	0.8	0.8	0.8	0.8	0.8	0.8	0.8	0.8	0.8	0.8	0.8	0.8	0.8	0.8	0.8	0.8
18	0.9	0.9	0.9	0.9	0.8	0.8	0.8	0.8	0.8	0.8	0.8	0.8	0.8	0.8	0.8	0.8	0.8	0.8	0.8	0.8	0.8
19	0.9	0.9	0.9	0.9	0.8	0.8	0.8	0.8	0.8	0.8	0.8	0.8	0.8	0.8	0.8	0.8	0.8	0.8	0.8	0.8	0.8
20	0.9	0.9	0.9	0.9	0.8	0.8	0.8	0.8	0.8	0.8	0.8	0.8	0.8	0.8	0.8	0.8	0.8	0.8	0.8	0.8	0.8
21	0.9	0.9	0.9	0.9	0.9	0.9	0.9	0.9	0.9	0.9	0.8	0.8	0.8	0.8	0.8	0.8	0.8	0.8	0.8	0.8	0.8
22	1.0	1.0	0.9	0.9	0.9	0.9	0.9	0.9	0.9	0.9	0.9	0.9	0.9	0.9	0.9	0.9	0.9	0.9	0.8	0.8	0.8
23	1.0	1.0	1.0	1.0	1.0	1.0	0.9	0.9	0.9	0.9	0.9	0.9	0.9	0.9	0.9	0.9	0.9	0.9	0.9	0.9	0.9
24	1.0	1.0	1.0	1.0	1.0	1.0	1.0	1.0	1.0	1.0	1.0	0.9	0.9	0.9	0.9	0.9	0.9	0.9	0.9	0.9	0.9
25	1.1	1.1	1.1	1.0	1.0	1.0	1.0	1.0	1.0	1.0	1.0	1.0	1.0	1.0	1.0	1.0	0.9	0.9	0.9	0.9	0.9
26	1.1	1.1	1.1	1.1	1.1	1.1	1.0	1.0	1.0	1.0	1.0	1.0	1.0	1.0	1.0	1.0	1.0	1.0	1.0	1.0	1.0
27	1.2	1.1	1.1	1.1	1.1	1.1	1.1	1.1	1.1	1.1	1.0	1.0	1.0	1.0	1.0	1.0	1.0	1.0	1.0	1.0	1.0
28	1.2	1.2	1.2	1.2	1.1	1.1	1.1	1.1	1.1	1.1	1.1	1.1	1.1	1.1	1.1	1.0	1.0	1.0	1.0	1.0	1.0
29	1.2	1.2	1.2	1.2	1.2	1.2	1.2	1.1	1.1	1.1	1.1	1.1	1.1	1.1	1.1	1.1	1.1	1.1	1.1	1.0	1.0
30	1.3	1.3	1.2	1.2	1.2	1.2	1.2	1.2	1.2	1.2	1.2	1.1	1.1	1.1	1.1	1.1	1.1	1.1	1.1	1.1	1.1
31	1.3	1.3	1.3	1.3	1.2	1.2	1.2	1.2	1.2	1.2	1.2	1.2	1.2	1.2	1.1	1.1	1.1	1.1	1.1	1.1	1.1
32									1.2	1.2	1.2	1.2	1.2	1.2	1.1	1.1	1.1	1.1	1.1	1.1	1.1
33									1.2	1.2	1.2	1.2	1.2	1.2	1.1	1.1	1.1	1.1	1.1	1.1	1.1
34									1.2	1.2	1.2	1.2	1.2	1.2	1.2	1.2	1.2	1.2	1.2	1.1	1.1

Table 1.4.5-9
Fuel Qualification Table for a BWR Fuel Assembly

(Part 2 of 4)

(Minimum required years of cooling time after reactor core discharge)

Burnup, GWD/MTU	Enrichment, wt. % U-235																				
	3.0	3.1	3.2	3.3	3.4	3.5	3.6	3.7	3.8	3.9	4.0	4.1	4.2	4.3	4.4	4.5	4.6	4.7	4.8	4.9	5.0
6	0.5	0.5	0.5	0.5	0.5	0.5	0.5	0.5	0.5	0.5	0.5	0.5	0.5	0.5	0.5	0.5	0.5	0.5	0.5	0.5	0.5
7	0.5	0.5	0.5	0.5	0.5	0.5	0.5	0.5	0.5	0.5	0.5	0.5	0.5	0.5	0.5	0.5	0.5	0.5	0.5	0.5	0.5
8	0.6	0.6	0.6	0.6	0.6	0.6	0.6	0.6	0.6	0.6	0.6	0.6	0.6	0.6	0.6	0.6	0.6	0.6	0.6	0.6	0.6
9	0.6	0.6	0.6	0.6	0.6	0.6	0.6	0.6	0.6	0.6	0.6	0.6	0.6	0.6	0.6	0.6	0.6	0.6	0.6	0.6	0.6
10	0.6	0.6	0.6	0.6	0.6	0.6	0.6	0.6	0.6	0.6	0.6	0.6	0.6	0.6	0.6	0.6	0.6	0.6	0.6	0.6	0.6
11	0.6	0.6	0.6	0.6	0.6	0.6	0.6	0.6	0.6	0.6	0.6	0.6	0.6	0.6	0.6	0.6	0.6	0.6	0.6	0.6	0.6
12	0.6	0.6	0.6	0.6	0.6	0.6	0.6	0.6	0.6	0.6	0.6	0.6	0.6	0.6	0.6	0.6	0.6	0.6	0.6	0.6	0.6
13	0.7	0.7	0.7	0.7	0.7	0.7	0.7	0.7	0.7	0.7	0.7	0.7	0.7	0.7	0.7	0.7	0.7	0.7	0.7	0.7	0.7
14	0.7	0.7	0.7	0.7	0.7	0.7	0.7	0.7	0.7	0.7	0.7	0.7	0.7	0.7	0.7	0.7	0.7	0.7	0.7	0.7	0.7
15	0.7	0.7	0.7	0.7	0.7	0.7	0.7	0.7	0.7	0.7	0.7	0.7	0.7	0.7	0.7	0.7	0.7	0.7	0.7	0.7	0.7
16	0.7	0.7	0.7	0.7	0.7	0.7	0.7	0.7	0.7	0.7	0.7	0.7	0.7	0.7	0.7	0.7	0.7	0.7	0.7	0.7	0.7
17	0.8	0.8	0.8	0.8	0.8	0.8	0.8	0.8	0.8	0.8	0.8	0.7	0.7	0.7	0.7	0.7	0.7	0.7	0.7	0.7	0.7
18	0.8	0.8	0.8	0.8	0.8	0.8	0.8	0.8	0.8	0.8	0.8	0.8	0.8	0.8	0.8	0.8	0.8	0.8	0.8	0.8	0.8
19	0.8	0.8	0.8	0.8	0.8	0.8	0.8	0.8	0.8	0.8	0.8	0.8	0.8	0.8	0.8	0.8	0.8	0.8	0.8	0.8	0.8
20	0.8	0.8	0.8	0.8	0.8	0.8	0.8	0.8	0.8	0.8	0.8	0.8	0.8	0.8	0.8	0.8	0.8	0.8	0.8	0.8	0.8
21	0.8	0.8	0.8	0.8	0.8	0.8	0.8	0.8	0.8	0.8	0.8	0.8	0.8	0.8	0.8	0.8	0.8	0.8	0.8	0.8	0.8
22	0.8	0.8	0.8	0.8	0.8	0.8	0.8	0.8	0.8	0.8	0.8	0.8	0.8	0.8	0.8	0.8	0.8	0.8	0.8	0.8	0.8
23	0.9	0.9	0.9	0.9	0.9	0.9	0.9	0.8	0.8	0.8	0.8	0.8	0.8	0.8	0.8	0.8	0.8	0.8	0.8	0.8	0.8
24	0.9	0.9	0.9	0.9	0.9	0.9	0.9	0.9	0.9	0.9	0.9	0.9	0.9	0.9	0.9	0.9	0.9	0.9	0.9	0.9	0.9
25	0.9	0.9	0.9	0.9	0.9	0.9	0.9	0.9	0.9	0.9	0.9	0.9	0.9	0.9	0.9	0.9	0.9	0.9	0.9	0.9	0.9
26	1.0	0.9	0.9	0.9	0.9	0.9	0.9	0.9	0.9	0.9	0.9	0.9	0.9	0.9	0.9	0.9	0.9	0.9	0.9	0.9	0.9
27	1.0	1.0	1.0	1.0	1.0	1.0	1.0	1.0	0.9	0.9	0.9	0.9	0.9	0.9	0.9	0.9	0.9	0.9	0.9	0.9	0.9
28	1.0	1.0	1.0	1.0	1.0	1.0	1.0	1.0	1.0	1.0	1.0	1.0	1.0	1.0	1.0	1.0	1.0	1.0	0.9	0.9	0.9
29	1.0	1.0	1.0	1.0	1.0	1.0	1.0	1.0	1.0	1.0	1.0	1.0	1.0	1.0	1.0	1.0	1.0	1.0	1.0	1.0	1.0
30	1.1	1.1	1.1	1.0	1.0	1.0	1.0	1.0	1.0	1.0	1.0	1.0	1.0	1.0	1.0	1.0	1.0	1.0	1.0	1.0	1.0
31	1.1	1.1	1.1	1.1	1.1	1.1	1.1	1.1	1.1	1.1	1.0	1.0	1.0	1.0	1.0	1.0	1.0	1.0	1.0	1.0	1.0
32	1.1	1.1	1.1	1.1	1.1	1.1	1.1	1.1	1.1	1.1	1.0	1.0	1.0	1.0	1.0	1.0	1.0	1.0	1.0	1.0	1.0
33	1.1	1.1	1.1	1.1	1.1	1.1	1.1	1.1	1.1	1.1	1.0	1.0	1.0	1.0	1.0	1.0	1.0	1.0	1.0	1.0	1.0
34	1.1	1.1	1.1	1.1	1.1	1.1	1.1	1.1	1.1	1.1	1.1	1.1	1.1	1.1	1.0	1.0	1.0	1.0	1.0	1.0	1.0

Table 1.4.5-9
Fuel Qualification Table for a BWR Fuel Assembly

(Part 3 of 4)

(Minimum required years of cooling time after reactor core discharge)

Burnup, GWD/MTU	Enrichment, wt. % U-235																				
	0.9	1.0	1.1	1.2	1.3	1.4	1.5	1.6	1.7	1.8	1.9	2.0	2.1	2.2	2.3	2.4	2.5	2.6	2.7	2.8	2.9
35									1.3	1.3	1.3	1.3	1.2	1.2	1.2	1.2	1.2	1.2	1.2	1.2	1.2
36											1.3	1.3	1.3	1.3	1.3	1.2	1.2	1.2	1.2	1.2	1.2
37											1.3	1.3	1.3	1.3	1.3	1.3	1.3	1.3	1.3	1.3	1.2
38											1.4	1.4	1.4	1.4	1.3	1.3	1.3	1.3	1.3	1.3	1.3
39											1.4	1.4	1.4	1.4	1.4	1.4	1.4	1.4	1.4	1.3	1.3
40																		1.4	1.4	1.4	1.4
41																		1.5	1.4	1.4	1.4
42																		1.5	1.5	1.5	1.5
43																		1.6	1.5	1.5	1.5
44																		1.6	1.6	1.6	1.6
45																		1.7	1.6	1.6	1.6
46																		1.7	1.7	1.7	1.7
47																		1.8	1.8	1.7	1.7
48																		1.8	1.8	1.8	1.8
49																		1.9	1.8	1.8	1.8
50																		1.9	1.9	1.9	1.9
51																		2.0	2.0	1.9	1.9
52																		2.1	2.0	2.0	2.0
53																		2.1	2.1	2.1	2.0
54																		2.2	2.2	2.1	2.1
55																		2.3	2.2	2.2	2.2
56																		2.4	2.3	2.3	2.3
57																		2.4	2.4	2.4	2.3
58																		2.5	2.5	2.4	2.4
59																		2.6	2.6	2.5	2.5
60																		2.7	2.7	2.6	2.6
61																		2.8	2.8	2.7	2.7
62																		3.0	2.9	2.8	2.8

Table 1.4.5-9
Fuel Qualification Table for a BWR Fuel Assembly

(Part 4 of 4)

(Minimum required years of cooling time after reactor core discharge)

Burnup, GWD/MTU	Enrichment, wt. % U-235																				
	3.0	3.1	3.2	3.3	3.4	3.5	3.6	3.7	3.8	3.9	4.0	4.1	4.2	4.3	4.4	4.5	4.6	4.7	4.8	4.9	5.0
35	1.2	1.2	1.1	1.1	1.1	1.1	1.1	1.1	1.1	1.1	1.1	1.1	1.1	1.1	1.1	1.1	1.1	1.1	1.1	1.1	1.1
36	1.2	1.2	1.2	1.2	1.2	1.2	1.2	1.1	1.1	1.1	1.1	1.1	1.1	1.1	1.1	1.1	1.1	1.1	1.1	1.1	1.1
37	1.2	1.2	1.2	1.2	1.2	1.2	1.2	1.2	1.2	1.2	1.2	1.2	1.1	1.1	1.1	1.1	1.1	1.1	1.1	1.1	1.1
38	1.3	1.3	1.3	1.3	1.2	1.2	1.2	1.2	1.2	1.2	1.2	1.2	1.2	1.2	1.2	1.2	1.2	1.2	1.2	1.2	1.1
39	1.3	1.3	1.3	1.3	1.3	1.3	1.3	1.3	1.3	1.3	1.2	1.2	1.2	1.2	1.2	1.2	1.2	1.2	1.2	1.2	1.2
40	1.4	1.4	1.4	1.3	1.3	1.3	1.3	1.3	1.3	1.3	1.3	1.3	1.3	1.3	1.3	1.3	1.3	1.2	1.2	1.2	1.2
41	1.4	1.4	1.4	1.4	1.4	1.4	1.4	1.4	1.3	1.3	1.3	1.3	1.3	1.3	1.3	1.3	1.3	1.3	1.3	1.3	1.3
42	1.5	1.5	1.4	1.4	1.4	1.4	1.4	1.4	1.4	1.4	1.4	1.4	1.4	1.4	1.3	1.3	1.3	1.3	1.3	1.3	1.3
43	1.5	1.5	1.5	1.5	1.5	1.5	1.5	1.4	1.4	1.4	1.4	1.4	1.4	1.4	1.4	1.4	1.4	1.4	1.4	1.4	1.4
44	1.6	1.6	1.5	1.5	1.5	1.5	1.5	1.5	1.5	1.5	1.5	1.5	1.5	1.4	1.4	1.4	1.4	1.4	1.4	1.4	1.4
45	1.6	1.6	1.6	1.6	1.6	1.6	1.5	1.5	1.5	1.5	1.5	1.5	1.5	1.5	1.5	1.5	1.5	1.5	1.5	1.4	1.4
46	1.7	1.6	1.6	1.6	1.6	1.6	1.6	1.6	1.6	1.6	1.6	1.6	1.5	1.5	1.5	1.5	1.5	1.5	1.5	1.5	1.5
47	1.7	1.7	1.7	1.7	1.7	1.7	1.6	1.6	1.6	1.6	1.6	1.6	1.6	1.6	1.6	1.6	1.6	1.6	1.5	1.5	1.5
48	1.8	1.8	1.7	1.7	1.7	1.7	1.7	1.7	1.7	1.7	1.7	1.6	1.6	1.6	1.6	1.6	1.6	1.6	1.6	1.6	1.6
49	1.8	1.8	1.8	1.8	1.8	1.8	1.7	1.7	1.7	1.7	1.7	1.7	1.7	1.7	1.7	1.7	1.7	1.6	1.6	1.6	1.6
50	1.9	1.9	1.8	1.8	1.8	1.8	1.8	1.8	1.8	1.8	1.8	1.7	1.7	1.7	1.7	1.7	1.7	1.7	1.7	1.7	1.7
51	1.9	1.9	1.9	1.9	1.9	1.9	1.8	1.8	1.8	1.8	1.8	1.8	1.8	1.8	1.8	1.8	1.7	1.7	1.7	1.7	1.7
52	2.0	1.9	1.9	1.9	1.9	1.9	1.9	1.9	1.9	1.9	1.9	1.8	1.8	1.8	1.8	1.8	1.8	1.8	1.8	1.8	1.8
53	2.0	2.0	2.0	2.0	2.0	2.0	1.9	1.9	1.9	1.9	1.9	1.9	1.9	1.9	1.9	1.9	1.8	1.8	1.8	1.8	1.8
54	2.1	2.1	2.0	2.0	2.0	2.0	2.0	2.0	2.0	2.0	1.9	1.9	1.9	1.9	1.9	1.9	1.9	1.9	1.9	1.9	1.8
55	2.2	2.1	2.1	2.1	2.1	2.1	2.0	2.0	2.0	2.0	2.0	2.0	2.0	2.0	2.0	1.9	1.9	1.9	1.9	1.9	1.9
56	2.2	2.2	2.2	2.1	2.1	2.1	2.1	2.1	2.1	2.1	2.0	2.0	2.0	2.0	2.0	2.0	2.0	2.0	2.0	1.9	1.9
57	2.3	2.3	2.2	2.2	2.2	2.1	2.1	2.1	2.1	2.1	2.1	2.1	2.1	2.1	2.0	2.0	2.0	2.0	2.0	2.0	2.0
58	2.4	2.3	2.3	2.3	2.2	2.2	2.2	2.2	2.2	2.2	2.1	2.1	2.1	2.1	2.1	2.1	2.1	2.1	2.1	2.0	2.0
59	2.4	2.4	2.4	2.3	2.3	2.3	2.2	2.2	2.2	2.2	2.2	2.2	2.2	2.2	2.1	2.1	2.1	2.1	2.1	2.1	2.1
60	2.5	2.5	2.4	2.4	2.4	2.3	2.3	2.3	2.3	2.3	2.2	2.2	2.2	2.2	2.2	2.2	2.2	2.2	2.1	2.1	2.1
61	2.6	2.6	2.5	2.5	2.4	2.4	2.4	2.3	2.3	2.3	2.3	2.3	2.3	2.3	2.2	2.2	2.2	2.2	2.2	2.2	2.2
62	2.7	2.7	2.6	2.6	2.5	2.5	2.5	2.4	2.4	2.4	2.3	2.3	2.3	2.3	2.3	2.3	2.3	2.3	2.2	2.2	2.2

Notes:

1. Explanatory notes and limitations regarding the use of this table follow Table 1.4.5-14.

Table 1.4.5-10
Fuel Qualification Table for 25 PWR/EPR Fuel Rods (UO_2)
(Minimum required years of cooling time after reactor core discharge)

Burnup, GWD/MTU	Enrichment, wt. % U-235																					
	0.9	1.7	1.9	2.6	2.7	2.8	2.9	3.3	3.7	3.8	3.9	4.0	4.1	4.2	4.3	4.4	4.5	4.6	4.7	4.8	4.9	5.0
9	0.2	0.2	0.2	0.2	0.2	0.2	0.2	0.2	0.2	0.2	0.2	0.2	0.2	0.2	0.2	0.2	0.2	0.2	0.2	0.2	0.2	0.2
31	0.3	0.3	0.3	0.3	0.3	0.3	0.3	0.3	0.3	0.3	0.3	0.3	0.3	0.3	0.3	0.3	0.3	0.3	0.3	0.3	0.3	0.3
35		0.3	0.3	0.3	0.3	0.3	0.3	0.3	0.3	0.3	0.3	0.3	0.3	0.3	0.3	0.3	0.3	0.3	0.3	0.3	0.3	0.3
39			0.3	0.3	0.3	0.3	0.3	0.3	0.3	0.3	0.3	0.3	0.3	0.3	0.3	0.3	0.3	0.3	0.3	0.3	0.3	0.3
52				0.3	0.3	0.3	0.3	0.3	0.3	0.3	0.3	0.3	0.3	0.3	0.3	0.3	0.3	0.3	0.3	0.3	0.3	0.3
53				0.4	0.4	0.3	0.3	0.3	0.3	0.3	0.3	0.3	0.3	0.3	0.3	0.3	0.3	0.3	0.3	0.3	0.3	0.3
54				0.4	0.4	0.4	0.4	0.3	0.3	0.3	0.3	0.3	0.3	0.3	0.3	0.3	0.3	0.3	0.3	0.3	0.3	0.3
55				0.4	0.4	0.4	0.4	0.4	0.4	0.3	0.3	0.3	0.3	0.3	0.3	0.3	0.3	0.3	0.3	0.3	0.3	0.3
56				0.4	0.4	0.4	0.4	0.4	0.4	0.4	0.4	0.4	0.4	0.4	0.3	0.3	0.3	0.3	0.3	0.3	0.3	0.3
57				0.4	0.4	0.4	0.4	0.4	0.4	0.4	0.4	0.4	0.4	0.4	0.4	0.4	0.4	0.4	0.4	0.4	0.3	0.3
62				0.4	0.4	0.4	0.4	0.4	0.4	0.4	0.4	0.4	0.4	0.4	0.4	0.4	0.4	0.4	0.4	0.4	0.4	0.4
63									0.4	0.4	0.4	0.4	0.4	0.4	0.4	0.4	0.4	0.4	0.4	0.4	0.4	0.4
64									0.4	0.4	0.4	0.4	0.4	0.4	0.4	0.4	0.4	0.4	0.4	0.4	0.4	0.4
65									0.4	0.4	0.4	0.4	0.4	0.4	0.4	0.4	0.4	0.4	0.4	0.4	0.4	0.4
66									0.4	0.4	0.4	0.4	0.4	0.4	0.4	0.4	0.4	0.4	0.4	0.4	0.4	0.4
67									0.4	0.4	0.4	0.4	0.4	0.4	0.4	0.4	0.4	0.4	0.4	0.4	0.4	0.4
68									0.5	0.5	0.4	0.4	0.4	0.4	0.4	0.4	0.4	0.4	0.4	0.4	0.4	0.4
69									0.5	0.5	0.5	0.5	0.5	0.5	0.4	0.4	0.4	0.4	0.4	0.4	0.4	0.4
70									0.5	0.5	0.5	0.5	0.5	0.5	0.5	0.5	0.5	0.4	0.4	0.4	0.4	0.4
71									0.5	0.5	0.5	0.5	0.5	0.5	0.5	0.5	0.5	0.5	0.5	0.5	0.5	0.5
72									0.5	0.5	0.5	0.5	0.5	0.5	0.5	0.5	0.5	0.5	0.5	0.5	0.5	0.5
73									0.5	0.5	0.5	0.5	0.5	0.5	0.5	0.5	0.5	0.5	0.5	0.5	0.5	0.5
74									0.5	0.5	0.5	0.5	0.5	0.5	0.5	0.5	0.5	0.5	0.5	0.5	0.5	0.5
75									0.6	0.6	0.5	0.5	0.5	0.5	0.5	0.5	0.5	0.5	0.5	0.5	0.5	0.5
76									0.6	0.6	0.6	0.6	0.5	0.5	0.5	0.5	0.5	0.5	0.5	0.5	0.5	0.5
77									0.6	0.6	0.6	0.6	0.6	0.6	0.6	0.5	0.5	0.5	0.5	0.5	0.5	0.5
78									0.7	0.6	0.6	0.6	0.6	0.6	0.6	0.6	0.6	0.6	0.5	0.5	0.5	0.5
79									0.7	0.7	0.7	0.7	0.6	0.6	0.6	0.6	0.6	0.6	0.6	0.6	0.6	0.5
80									0.7	0.7	0.7	0.7	0.7	0.7	0.6	0.6	0.6	0.6	0.6	0.6	0.6	0.6
81									0.8	0.8	0.7	0.7	0.7	0.7	0.7	0.7	0.7	0.6	0.6	0.6	0.6	0.6
82									0.8	0.8	0.8	0.8	0.7	0.7	0.7	0.7	0.7	0.7	0.7	0.7	0.6	0.6
83									0.9	0.8	0.8	0.8	0.8	0.8	0.8	0.7	0.7	0.7	0.7	0.7	0.7	0.7
84									0.9	0.9	0.9	0.8	0.8	0.8	0.8	0.8	0.8	0.7	0.7	0.7	0.7	0.7
85									1.0	0.9	0.9	0.9	0.9	0.9	0.8	0.8	0.8	0.8	0.8	0.8	0.7	0.7
86									1.0	1.0	1.0	0.9	0.9	0.9	0.9	0.9	0.8	0.8	0.8	0.8	0.8	0.8
87									1.1	1.0	1.0	1.0	1.0	0.9	0.9	0.9	0.9	0.9	0.8	0.8	0.8	0.8
88									1.1	1.1	1.1	1.0	1.0	1.0	1.0	0.9	0.9	0.9	0.9	0.9	0.8	0.8
89									1.2	1.2	1.1	1.1	1.1	1.0	1.0	1.0	1.0	0.9	0.9	0.9	0.9	0.9
90									1.3	1.2	1.2	1.1	1.1	1.1	1.1	1.0	1.0	1.0	1.0	0.9	0.9	0.9

Notes:

1. Explanatory notes and limitations regarding the use of this table follow Table 1.4.5-14.

Table 1.4.5-11
Fuel Qualification Table for 9 PWR/EPR Fuel Rods (UO_2)

(Minimum required years of cooling time after reactor core discharge)

Burnup, GWD/MTU	Enrichment, wt. % U-235																			
	0.9	1.7	1.9	2.6	2.7	3.3	3.7	3.8	3.9	4.0	4.1	4.2	4.3	4.4	4.5	4.6	4.7	4.8	4.9	5.0
31	0.2	0.2	0.2	0.2	0.2	0.2	0.2	0.2	0.2	0.2	0.2	0.2	0.2	0.2	0.2	0.2	0.2	0.2	0.2	0.2
35		0.2	0.2	0.2	0.2	0.2	0.2	0.2	0.2	0.2	0.2	0.2	0.2	0.2	0.2	0.2	0.2	0.2	0.2	0.2
39			0.2	0.2	0.2	0.2	0.2	0.2	0.2	0.2	0.2	0.2	0.2	0.2	0.2	0.2	0.2	0.2	0.2	0.2
51				0.2	0.2	0.2	0.2	0.2	0.2	0.2	0.2	0.2	0.2	0.2	0.2	0.2	0.2	0.2	0.2	0.2
52				0.3	0.2	0.2	0.2	0.2	0.2	0.2	0.2	0.2	0.2	0.2	0.2	0.2	0.2	0.2	0.2	0.2
53				0.3	0.3	0.2	0.2	0.2	0.2	0.2	0.2	0.2	0.2	0.2	0.2	0.2	0.2	0.2	0.2	0.2
54				0.3	0.3	0.3	0.3	0.3	0.2	0.2	0.2	0.2	0.2	0.2	0.2	0.2	0.2	0.2	0.2	0.2
62				0.3	0.3	0.3	0.3	0.3	0.3	0.3	0.3	0.3	0.3	0.3	0.3	0.3	0.3	0.3	0.3	0.3
90							0.3	0.3	0.3	0.3	0.3	0.3	0.3	0.3	0.3	0.3	0.3	0.3	0.3	0.3

Notes:

1. Explanatory notes and limitations regarding the use of this table follow Table 1.4.5-14.

Table 1.4.5-12
Fuel Qualification Table for 25 BWR Fuel Rods (UO_2)

(Part 1 of 6)

(Minimum required years of cooling time after reactor core discharge)

Burnup, GWD/MTU	Enrichment, wt. % U-235										
	0.9	1.0	1.1	1.2	1.3	1.4	1.5	1.6	1.7	1.8	1.9
10	0.20	0.20	0.20	0.20	0.20	0.20	0.20	0.20	0.20	0.20	0.20
24	0.25	0.25	0.25	0.25	0.25	0.25	0.25	0.25	0.25	0.25	0.25
25	0.30	0.25	0.25	0.25	0.25	0.25	0.25	0.25	0.25	0.25	0.25
26	0.30	0.30	0.30	0.30	0.30	0.30	0.30	0.30	0.30	0.30	0.25
27	0.30	0.30	0.30	0.30	0.30	0.30	0.30	0.30	0.30	0.30	0.30
28	0.30	0.30	0.30	0.30	0.30	0.30	0.30	0.30	0.30	0.30	0.30
29	0.30	0.30	0.30	0.30	0.30	0.30	0.30	0.30	0.30	0.30	0.30
30	0.30	0.30	0.30	0.30	0.30	0.30	0.30	0.30	0.30	0.30	0.30
31	0.30	0.30	0.30	0.30	0.30	0.30	0.30	0.30	0.30	0.30	0.30
32									0.30	0.30	0.30
33									0.30	0.30	0.30
34									0.30	0.30	0.30
35									0.30	0.30	0.30
36											0.30
37											0.35
38											0.35
39											0.35

Table 1.4.5-12
Fuel Qualification Table for 25 BWR Fuel Rods (UO_2)

(Part 2 of 6)

(Minimum required years of cooling time after reactor core discharge)

Burnup, GWD/MTU	Enrichment, wt. % U-235									
	2.0	2.1	2.2	2.3	2.4	2.5	2.6	2.7	2.8	2.9
10	0.20	0.20	0.20	0.20	0.20	0.20	0.20	0.20	0.20	0.20
24	0.25	0.25	0.25	0.25	0.25	0.25	0.25	0.25	0.25	0.25
25	0.25	0.25	0.25	0.25	0.25	0.25	0.25	0.25	0.25	0.25
26	0.25	0.25	0.25	0.25	0.25	0.25	0.25	0.25	0.25	0.25
27	0.30	0.30	0.30	0.30	0.30	0.30	0.30	0.30	0.30	0.30
28	0.30	0.30	0.30	0.30	0.30	0.30	0.30	0.30	0.30	0.30
29	0.30	0.30	0.30	0.30	0.30	0.30	0.30	0.30	0.30	0.30
30	0.30	0.30	0.30	0.30	0.30	0.30	0.30	0.30	0.30	0.30
31	0.30	0.30	0.30	0.30	0.30	0.30	0.30	0.30	0.30	0.30
32	0.30	0.30	0.30	0.30	0.30	0.30	0.30	0.30	0.30	0.30
33	0.30	0.30	0.30	0.30	0.30	0.30	0.30	0.30	0.30	0.30
34	0.30	0.30	0.30	0.30	0.30	0.30	0.30	0.30	0.30	0.30
35	0.30	0.30	0.30	0.30	0.30	0.30	0.30	0.30	0.30	0.30
36	0.30	0.30	0.30	0.30	0.30	0.30	0.30	0.30	0.30	0.30
37	0.35	0.35	0.30	0.30	0.30	0.30	0.30	0.30	0.30	0.30
38	0.35	0.35	0.35	0.35	0.35	0.35	0.35	0.35	0.35	0.35
39	0.35	0.35	0.35	0.35	0.35	0.35	0.35	0.35	0.35	0.35
40							0.35	0.35	0.35	0.35
41							0.40	0.35	0.35	0.35
42							0.40	0.40	0.40	0.40
43							0.40	0.40	0.40	0.40
44							0.40	0.40	0.40	0.40
45							0.45	0.45	0.45	0.45
46							0.45	0.45	0.45	0.45
47							0.45	0.45	0.45	0.45
48							0.50	0.50	0.50	0.50
49							0.50	0.50	0.50	0.50
50							0.50	0.50	0.50	0.50
51							0.53	0.53	0.53	0.50
52							0.60	0.60	0.60	0.60
53							0.60	0.60	0.60	0.60
54							0.63	0.63	0.63	0.60
55							0.68	0.63	0.63	0.63
56							0.68	0.68	0.68	0.68
57							0.74	0.74	0.74	0.69
58							0.80	0.75	0.75	0.75
59							0.80	0.80	0.80	0.80
60							0.84	0.84	0.84	0.84
61							0.89	0.89	0.89	0.84
62							0.93	0.93	0.93	0.88

Table 1.4.5-12
Fuel Qualification Table for 25 BWR Fuel Rods (UO_2)

(Part 3 of 6)

(Minimum required years of cooling time after reactor core discharge)

Burnup, GWD/MTU	Enrichment, wt. % U-235									
	3.0	3.1	3.2	3.3	3.4	3.5	3.6	3.7	3.8	3.9
10	0.20	0.20	0.20	0.20	0.20	0.20	0.20	0.20	0.20	0.20
24	0.25	0.25	0.25	0.25	0.25	0.25	0.25	0.25	0.25	0.25
25	0.25	0.25	0.25	0.25	0.25	0.25	0.25	0.25	0.25	0.25
26	0.25	0.25	0.25	0.25	0.25	0.25	0.25	0.25	0.25	0.25
27	0.30	0.30	0.30	0.30	0.30	0.30	0.30	0.30	0.30	0.30
28	0.30	0.30	0.30	0.30	0.30	0.30	0.30	0.30	0.30	0.30
29	0.30	0.30	0.30	0.30	0.30	0.30	0.30	0.30	0.30	0.30
30	0.30	0.30	0.30	0.30	0.30	0.30	0.30	0.30	0.30	0.30
31	0.30	0.30	0.30	0.30	0.30	0.30	0.30	0.30	0.30	0.30
32	0.30	0.30	0.30	0.30	0.30	0.30	0.30	0.30	0.30	0.30
33	0.30	0.30	0.30	0.30	0.30	0.30	0.30	0.30	0.30	0.30
34	0.30	0.30	0.30	0.30	0.30	0.30	0.30	0.30	0.30	0.30
35	0.30	0.30	0.30	0.30	0.30	0.30	0.30	0.30	0.30	0.30
36	0.30	0.30	0.30	0.30	0.30	0.30	0.30	0.30	0.30	0.30
37	0.30	0.30	0.30	0.30	0.30	0.30	0.30	0.30	0.30	0.30
38	0.35	0.35	0.35	0.35	0.30	0.30	0.30	0.30	0.30	0.30
39	0.35	0.35	0.35	0.35	0.35	0.35	0.35	0.35	0.35	0.35
40	0.35	0.35	0.35	0.35	0.35	0.35	0.35	0.35	0.35	0.35
41	0.35	0.35	0.35	0.35	0.35	0.35	0.35	0.35	0.35	0.35
42	0.40	0.40	0.40	0.40	0.40	0.40	0.40	0.40	0.40	0.35
43	0.40	0.40	0.40	0.40	0.40	0.40	0.40	0.40	0.40	0.40
44	0.40	0.40	0.40	0.40	0.40	0.40	0.40	0.40	0.40	0.40
45	0.45	0.45	0.45	0.40	0.40	0.40	0.40	0.40	0.40	0.40
46	0.45	0.45	0.45	0.45	0.45	0.45	0.45	0.45	0.45	0.45
47	0.45	0.45	0.45	0.45	0.45	0.45	0.45	0.45	0.45	0.45
48	0.45	0.45	0.45	0.45	0.45	0.45	0.45	0.45	0.45	0.45
49	0.50	0.50	0.50	0.50	0.50	0.50	0.50	0.50	0.45	0.45
50	0.50	0.50	0.50	0.50	0.50	0.50	0.50	0.50	0.50	0.50
51	0.50	0.50	0.50	0.50	0.50	0.50	0.50	0.50	0.50	0.50
52	0.60	0.60	0.60	0.60	0.60	0.60	0.50	0.50	0.50	0.50
53	0.60	0.60	0.60	0.60	0.60	0.60	0.60	0.60	0.60	0.60
54	0.60	0.60	0.60	0.60	0.60	0.60	0.60	0.60	0.60	0.60
55	0.63	0.63	0.63	0.60	0.60	0.60	0.60	0.60	0.60	0.60
56	0.68	0.63	0.63	0.63	0.63	0.63	0.63	0.63	0.60	0.60
57	0.69	0.69	0.69	0.69	0.64	0.64	0.64	0.64	0.64	0.64
58	0.75	0.70	0.70	0.70	0.70	0.70	0.70	0.65	0.65	0.65
59	0.75	0.75	0.75	0.75	0.75	0.70	0.70	0.70	0.70	0.70
60	0.79	0.79	0.79	0.79	0.75	0.74	0.74	0.74	0.74	0.74
61	0.84	0.84	0.84	0.79	0.79	0.79	0.79	0.79	0.74	0.74
62	0.88	0.88	0.88	0.83	0.83	0.83	0.83	0.79	0.78	0.78

Table 1.4.5-12
Fuel Qualification Table for 25 BWR Fuel Rods (UO_2)

(Part 4 of 6)

(Minimum required years of cooling time after reactor core discharge)

Burnup, GWD/MTU	Enrichment, wt. % U-235									
	3.0	3.1	3.2	3.3	3.4	3.5	3.6	3.7	3.8	3.9
63								0.83	0.83	0.83
64								0.88	0.88	0.83
65								0.93	0.88	0.88
66								0.93	0.93	0.93
67								0.98	0.98	0.98
68								1.00	1.00	1.00
69								1.05	1.05	1.05
70								1.08	1.08	1.08
71								1.13	1.13	1.13
72								1.16	1.16	1.16
73								1.21	1.21	1.21
74								1.26	1.26	1.21
75								1.31	1.31	1.26
76								1.40	1.35	1.35
77								1.41	1.41	1.36
78								1.51	1.46	1.41
79								1.57	1.52	1.47
80								1.59	1.59	1.54
81								1.70	1.65	1.60
82								1.77	1.72	1.67
83								1.83	1.78	1.73
84								1.92	1.87	1.82
85								2.00	1.95	1.90
86								2.11	2.01	1.96
87								2.17	2.12	2.07
88								2.32	2.22	2.17
89								2.43	2.33	2.28
90								2.62	2.52	2.37

Table 1.4.5-12
Fuel Qualification Table for 25 BWR Fuel Rods (UO_2)

(Part 5 of 6)

(Minimum required years of cooling time after reactor core discharge)

Burnup, GWD/MTU	Enrichment, wt. % U-235										
	4.0	4.1	4.2	4.3	4.4	4.5	4.6	4.7	4.8	4.9	5.0
10	0.20	0.20	0.20	0.20	0.20	0.20	0.20	0.20	0.20	0.20	0.20
24	0.25	0.25	0.25	0.25	0.25	0.25	0.25	0.25	0.25	0.25	0.25
25	0.25	0.25	0.25	0.25	0.25	0.25	0.25	0.25	0.25	0.25	0.25
26	0.25	0.25	0.25	0.25	0.25	0.25	0.25	0.25	0.25	0.25	0.25
27	0.30	0.30	0.30	0.30	0.30	0.30	0.30	0.30	0.30	0.30	0.25
28	0.30	0.30	0.30	0.30	0.30	0.30	0.30	0.30	0.30	0.30	0.30
29	0.30	0.30	0.30	0.30	0.30	0.30	0.30	0.30	0.30	0.30	0.30
30	0.30	0.30	0.30	0.30	0.30	0.30	0.30	0.30	0.30	0.30	0.30
31	0.30	0.30	0.30	0.30	0.30	0.30	0.30	0.30	0.30	0.30	0.30
32	0.30	0.30	0.30	0.30	0.30	0.30	0.30	0.30	0.30	0.30	0.30
33	0.30	0.30	0.30	0.30	0.30	0.30	0.30	0.30	0.30	0.30	0.30
34	0.30	0.30	0.30	0.30	0.30	0.30	0.30	0.30	0.30	0.30	0.30
35	0.30	0.30	0.30	0.30	0.30	0.30	0.30	0.30	0.30	0.30	0.30
36	0.30	0.30	0.30	0.30	0.30	0.30	0.30	0.30	0.30	0.30	0.30
37	0.30	0.30	0.30	0.30	0.30	0.30	0.30	0.30	0.30	0.30	0.30
38	0.30	0.30	0.30	0.30	0.30	0.30	0.30	0.30	0.30	0.30	0.30
39	0.35	0.35	0.35	0.35	0.35	0.35	0.35	0.35	0.35	0.35	0.35
40	0.35	0.35	0.35	0.35	0.35	0.35	0.35	0.35	0.35	0.35	0.35
41	0.35	0.35	0.35	0.35	0.35	0.35	0.35	0.35	0.35	0.35	0.35
42	0.35	0.35	0.35	0.35	0.35	0.35	0.35	0.35	0.35	0.35	0.35
43	0.40	0.40	0.40	0.40	0.40	0.40	0.40	0.40	0.40	0.40	0.40
44	0.40	0.40	0.40	0.40	0.40	0.40	0.40	0.40	0.40	0.40	0.40
45	0.40	0.40	0.40	0.40	0.40	0.40	0.40	0.40	0.40	0.40	0.40
46	0.45	0.45	0.45	0.45	0.40	0.40	0.40	0.40	0.40	0.40	0.40
47	0.45	0.45	0.45	0.45	0.45	0.45	0.45	0.45	0.45	0.45	0.45
48	0.45	0.45	0.45	0.45	0.45	0.45	0.45	0.45	0.45	0.45	0.45
49	0.45	0.45	0.45	0.45	0.45	0.45	0.45	0.45	0.45	0.45	0.45
50	0.50	0.50	0.50	0.50	0.50	0.50	0.50	0.50	0.45	0.45	0.45
51	0.50	0.50	0.50	0.50	0.50	0.50	0.50	0.50	0.50	0.50	0.50
52	0.50	0.50	0.50	0.50	0.50	0.50	0.50	0.50	0.50	0.50	0.50
53	0.60	0.60	0.60	0.60	0.60	0.60	0.60	0.60	0.60	0.60	0.60
54	0.60	0.60	0.60	0.60	0.60	0.60	0.60	0.60	0.60	0.60	0.60
55	0.60	0.60	0.60	0.60	0.60	0.60	0.60	0.60	0.60	0.60	0.60
56	0.60	0.60	0.60	0.60	0.60	0.60	0.60	0.60	0.60	0.60	0.60
57	0.64	0.60	0.60	0.60	0.60	0.60	0.60	0.60	0.60	0.60	0.60
58	0.65	0.65	0.65	0.65	0.65	0.60	0.60	0.60	0.60	0.60	0.60
59	0.70	0.65	0.65	0.65	0.65	0.65	0.65	0.65	0.65	0.65	0.60
60	0.70	0.69	0.69	0.69	0.69	0.69	0.69	0.69	0.65	0.65	0.64
61	0.74	0.74	0.74	0.74	0.69	0.69	0.69	0.69	0.69	0.69	0.69
62	0.78	0.78	0.78	0.74	0.73	0.73	0.73	0.73	0.73	0.73	0.73

Table 1.4.5-12
Fuel Qualification Table for 25 BWR Fuel Rods (UO_2)

(Part 6 of 6)

(Minimum required years of cooling time after reactor core discharge)

Burnup, GWD/MTU	Enrichment, wt. % U-235										
	4.0	4.1	4.2	4.3	4.4	4.5	4.6	4.7	4.8	4.9	5.0
63	0.83	0.78	0.78	0.78	0.78	0.78	0.78	0.73	0.73	0.73	0.73
64	0.83	0.83	0.83	0.83	0.83	0.78	0.78	0.78	0.78	0.78	0.78
65	0.88	0.88	0.83	0.83	0.83	0.83	0.83	0.83	0.83	0.78	0.78
66	0.93	0.88	0.88	0.88	0.88	0.88	0.83	0.83	0.83	0.83	0.83
67	0.93	0.93	0.93	0.93	0.88	0.88	0.88	0.88	0.88	0.88	0.83
68	1.00	0.95	0.95	0.95	0.95	0.90	0.90	0.90	0.90	0.90	0.90
69	1.00	1.00	1.00	1.00	0.95	0.95	0.95	0.95	0.95	0.90	0.90
70	1.03	1.03	1.03	1.03	0.98	0.98	0.98	0.98	0.98	0.93	0.93
71	1.08	1.08	1.08	1.03	1.03	1.03	1.03	0.98	0.98	0.98	0.98
72	1.11	1.11	1.11	1.11	1.06	1.06	1.06	1.06	1.01	1.01	1.01
73	1.16	1.16	1.16	1.11	1.11	1.11	1.06	1.06	1.06	1.06	1.06
74	1.21	1.21	1.16	1.16	1.16	1.11	1.11	1.11	1.11	1.06	1.06
75	1.26	1.26	1.21	1.21	1.21	1.16	1.16	1.16	1.11	1.11	1.11
76	1.30	1.30	1.25	1.25	1.25	1.20	1.20	1.20	1.15	1.15	1.15
77	1.36	1.31	1.31	1.31	1.26	1.26	1.26	1.21	1.21	1.21	1.16
78	1.41	1.36	1.36	1.31	1.31	1.31	1.26	1.26	1.26	1.21	1.21
79	1.47	1.42	1.42	1.37	1.37	1.32	1.32	1.32	1.27	1.27	1.27
80	1.49	1.49	1.44	1.44	1.39	1.39	1.34	1.34	1.34	1.29	1.29
81	1.55	1.55	1.50	1.50	1.45	1.45	1.40	1.40	1.35	1.35	1.35
82	1.62	1.62	1.57	1.52	1.52	1.47	1.47	1.42	1.42	1.40	1.40
83	1.68	1.68	1.63	1.60	1.60	1.60	1.50	1.50	1.50	1.50	1.40
84	1.77	1.72	1.70	1.70	1.70	1.60	1.60	1.60	1.50	1.50	1.50
85	1.85	1.80	1.75	1.70	1.70	1.70	1.60	1.60	1.60	1.60	1.50
86	1.91	1.86	1.81	1.81	1.80	1.70	1.70	1.70	1.60	1.60	1.60
87	2.02	1.97	1.92	1.90	1.80	1.80	1.80	1.70	1.70	1.70	1.60
88	2.12	2.07	2.00	2.00	1.90	1.90	1.80	1.80	1.80	1.70	1.70
89	2.18	2.13	2.10	2.10	2.00	2.00	1.90	1.90	1.80	1.80	1.80
90	2.32	2.30	2.20	2.10	2.10	2.00	2.00	1.90	1.90	1.90	1.80

Notes:

1. Explanatory notes and limitations regarding the use of this table follow Table 1.4.5-14.

Table 1.4.5-13
Fuel Qualification Table for 9 BWR Fuel Rods (UO_2)

(Minimum required years of cooling time after reactor core discharge)

Burnup, GWD/MTU	Enrichment, wt. % U-235																			
	0.9	1.0	1.7	1.9	2.6	3.0	3.7	3.8	3.9	4.0	4.1	4.2	4.3	4.4	4.5	4.6	4.7	4.8	4.9	5.0
12	0.2	0.2	0.2	0.2	0.2	0.2	0.2	0.2	0.2	0.2	0.2	0.2	0.2	0.2	0.2	0.2	0.2	0.2	0.2	0.2
13	0.3	0.2	0.2	0.2	0.2	0.2	0.2	0.2	0.2	0.2	0.2	0.2	0.2	0.2	0.2	0.2	0.2	0.2	0.2	0.2
14	0.3	0.3	0.3	0.3	0.3	0.3	0.3	0.3	0.3	0.3	0.3	0.3	0.3	0.3	0.3	0.3	0.3	0.3	0.3	0.3
31	0.3	0.3	0.3	0.3	0.3	0.3	0.3	0.3	0.3	0.3	0.3	0.3	0.3	0.3	0.3	0.3	0.3	0.3	0.3	0.3
35			0.3	0.3	0.3	0.3	0.3	0.3	0.3	0.3	0.3	0.3	0.3	0.3	0.3	0.3	0.3	0.3	0.3	0.3
39				0.3	0.3	0.3	0.3	0.3	0.3	0.3	0.3	0.3	0.3	0.3	0.3	0.3	0.3	0.3	0.3	0.3
59					0.3	0.3	0.3	0.3	0.3	0.3	0.3	0.3	0.3	0.3	0.3	0.3	0.3	0.3	0.3	0.3
60					0.4	0.3	0.3	0.3	0.3	0.3	0.3	0.3	0.3	0.3	0.3	0.3	0.3	0.3	0.3	0.3
61					0.4	0.4	0.4	0.4	0.4	0.4	0.4	0.4	0.4	0.4	0.4	0.4	0.3	0.3	0.3	0.3
62					0.4	0.4	0.4	0.4	0.4	0.4	0.4	0.4	0.4	0.4	0.4	0.4	0.4	0.4	0.4	0.4
72							0.4	0.4	0.4	0.4	0.4	0.4	0.4	0.4	0.4	0.4	0.4	0.4	0.4	0.4
73							0.5	0.5	0.5	0.5	0.5	0.5	0.5	0.4	0.4	0.4	0.4	0.4	0.4	0.4
78							0.5	0.5	0.5	0.5	0.5	0.5	0.5	0.5	0.5	0.5	0.5	0.5	0.5	0.5
79							0.5	0.5	0.5	0.5	0.5	0.5	0.5	0.5	0.5	0.5	0.5	0.5	0.5	0.5
87							0.5	0.5	0.5	0.5	0.5	0.5	0.5	0.5	0.5	0.5	0.5	0.5	0.5	0.5
88							0.6	0.5	0.5	0.5	0.5	0.5	0.5	0.5	0.5	0.5	0.5	0.5	0.5	0.5
89							0.6	0.6	0.6	0.5	0.5	0.5	0.5	0.5	0.5	0.5	0.5	0.5	0.5	0.5
90							0.7	0.7	0.6	0.6	0.6	0.6	0.6	0.6	0.6	0.6	0.5	0.5	0.5	0.5

Notes:

1. Explanatory notes and limitations regarding the use of this table follow Table 1.4.5-14.

Table 1.4.5-14
Fuel Qualification Table for MOX PWR/BWR 25 Rods and MOX PWR/BWR 9 Rods

Burnup (GWD/MTHM)	MOX 25 pins	MOX 9 pins	Burnup (GWD/MTHM)	MOX 25 pins	MOX 9 pins
6	0.2	0.1	49	1.4	0.2
7	0.2	0.1	50	1.5	0.2
8	0.2	0.1	51	1.6	0.2
9	0.2	0.1	52	1.7	0.2
10	0.2	0.1	53	1.8	0.3
11	0.2	0.1	54	1.9	0.3
12	0.2	0.1	55	2	0.3
13	0.2	0.1	56	2.2	0.3
14	0.2	0.1	57	2.3	0.3
15	0.2	0.2	58	2.4	0.3
16	0.3	0.2	59	2.6	0.3
17	0.3	0.2	60	2.7	0.3
18	0.3	0.2	61	2.9	0.3
19	0.3	0.2	62	3.1	0.4
20	0.3	0.2	63	3.3	0.4
21	0.3	0.2	64	3.6	0.5
22	0.3	0.2	65	3.8	0.5
23	0.4	0.2	66	4.1	0.5
24	0.4	0.2	67	4.4	0.6
25	0.4	0.2	68	4.7	0.6
26	0.5	0.2	69	5.1	0.7
27	0.5	0.2	70	5.4	0.8
28	0.5	0.2	71	5.8	0.8
29	0.5	0.2	72	6.2	0.9
30	0.5	0.2	73	6.6	1
31	0.5	0.2	74	7	1.1
32	0.5	0.2	75	7.4	1.1
33	0.5	0.2	76	7.8	1.2
34	0.5	0.2	77	8.2	1.3
35	0.6	0.2	78	8.7	1.5
36	0.6	0.2	79	9.1	1.6
37	0.6	0.2	80	9.5	1.7
38	0.7	0.2	81	9.9	1.8
39	0.7	0.2	82	10.5	2
40	0.8	0.2	83	10.8	2.1
41	0.9	0.2	84	11.2	2.3
42	0.9	0.2	85	11.6	2.4
43	1	0.2	86	12	2.6
44	1.1	0.2	87	12.4	2.8
45	1.1	0.2	88	12.9	3
46	1.2	0.2	89	13.2	3.2
47	1.3	0.2	90	13.6	3.4
48	1.4	0.2			

Notes:
1. Explanatory notes and limitation regarding the use of this table follow Table 1.4.5-14.

Notes:

- Burnup = Assembly Average burnup when loading fuel assemblies.
- Use burnup and enrichment to lookup minimum cooling time in years. Licensee is responsible for ensuring that uncertainties in fuel enrichment and burnup are correctly accounted for during fuel qualification.
- For values not explicitly listed in the tables, round burnups **up** to the first value shown, round enrichments **down**, and select the cooling time listed. Grey areas indicate fuel not analyzed for loading..
- Fuel with an initial enrichment less than 0.9 (or less than the minimum provided above for each burnup) or greater than 5.0 wt. % U-235 is unacceptable for transportation.
- Fuel assembly with a burnup greater than 62 GWD/MTU is unacceptable for transportation.
- Burnup = Peak pin burnup when loading fuel rods.
- When transporting 25 or less fuel rods, the rods shall be placed in a specially designed 25 pin can.
- When transporting 9 or less fuel rods, the rods shall be placed in the 3x3 region of the 25 pin can.
- Fuel rods with a burnup greater than 90 GWD/MTU are unacceptable for transportation.
- Shaded areas in these Tables indicate fuel is not analyzed for loading.

Example: Per Table 1.4.5-8, a PWR assembly with an initial enrichment of 4.85 wt. % U-235 and a burnup of 41.5 GWD/MTU is acceptable for transport after a 4.1-year cooling time as defined by 4.8 wt. % U-235 (rounding down) and 42 GWD/MTU (rounding up) on the qualification table (other considerations not withstanding).

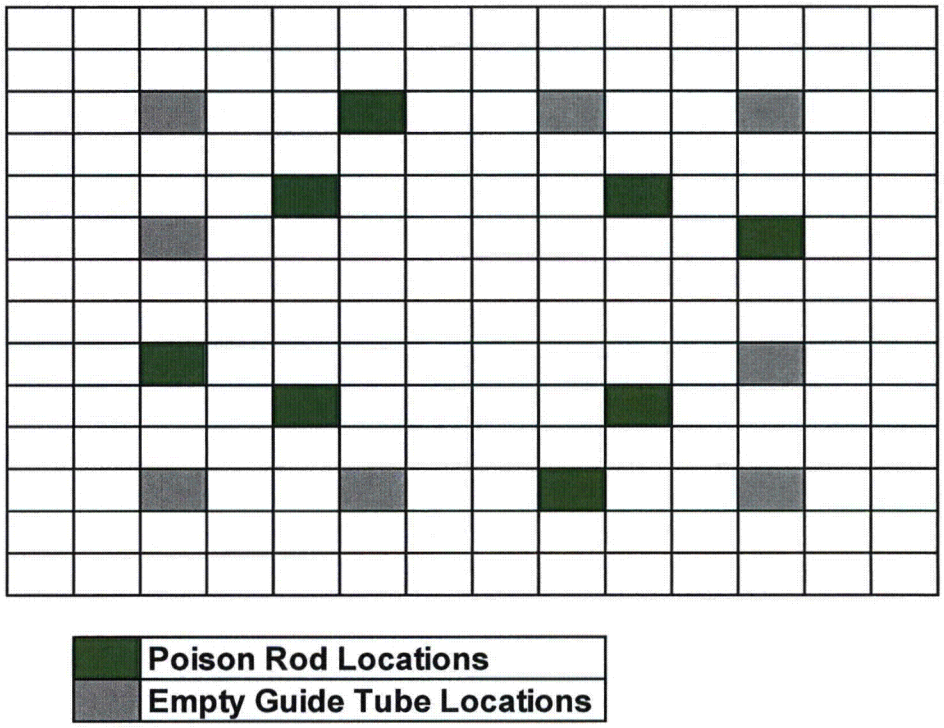

Note: This configuration indicates the relative location of the poison rods within the guide tubes and does not provide any other fuel class specific information. Any other configuration of poison rods that is rotationally symmetric is also acceptable.

Figure 1.4.5-1
PRA Insertion Locations for WE 14x14 Class Assemblies

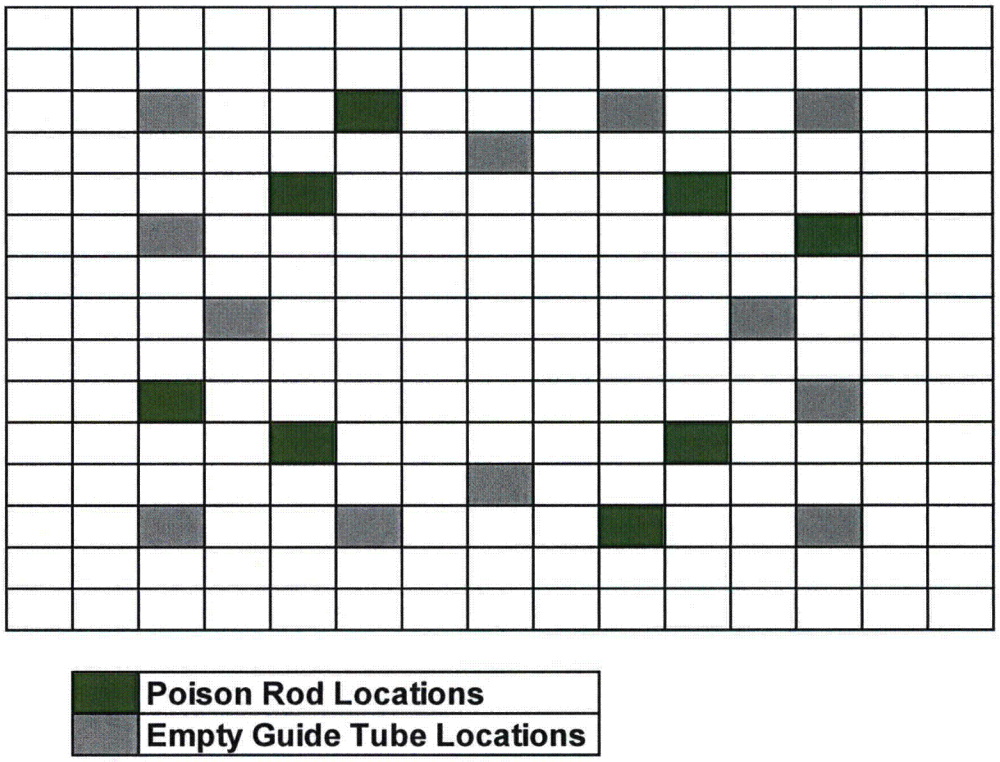

Note: This configuration indicates the relative location of the poison rods within the guide tubes and does not provide any other fuel class specific information. Any other configuration of poison rods that is rotationally symmetric is also acceptable.

Figure 1.4.5-2
PRA Insertion Locations for WE 15x15 Class Assemblies

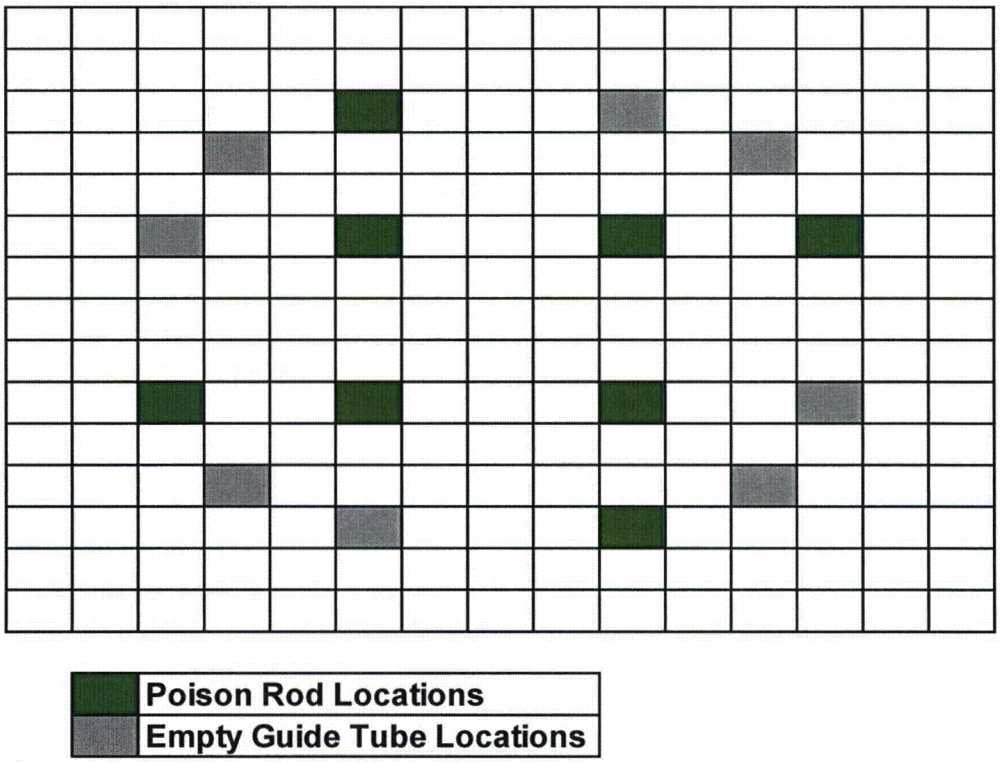

Note: This configuration indicates the relative location of the poison rods within the guide tubes and does not provide any other fuel class specific information. Any other configuration of poison rods that is rotationally symmetric is also acceptable.

Figure 1.4.5-3
PRA Insertion Locations for BW 15x15 Class Assemblies

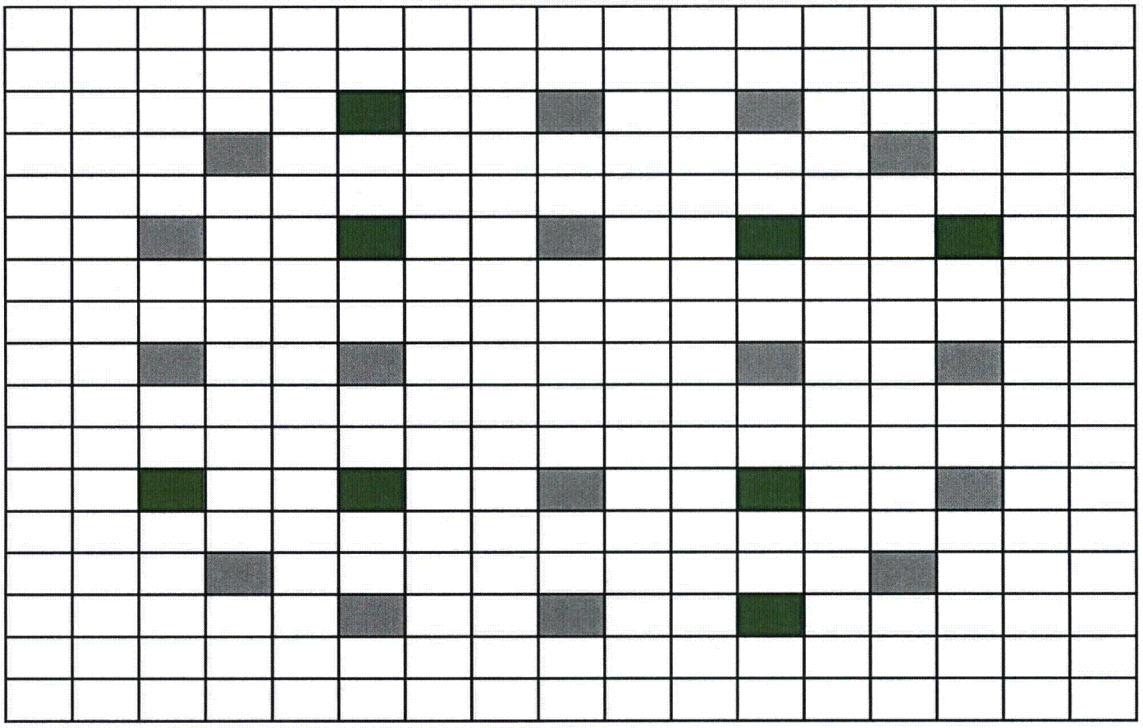

	Poison Rod Locations
	Empty Guide Tube Locations

Note: This configuration indicates the relative location of the poison rods within the guide tubes and does not provide any other fuel class specific information. Any other configuration of poison rods that is rotationally symmetric is also acceptable.

Figure 1.4.5-4
PRA Insertion Locations for BW 17x17 and WE 17x17 Class Assemblies

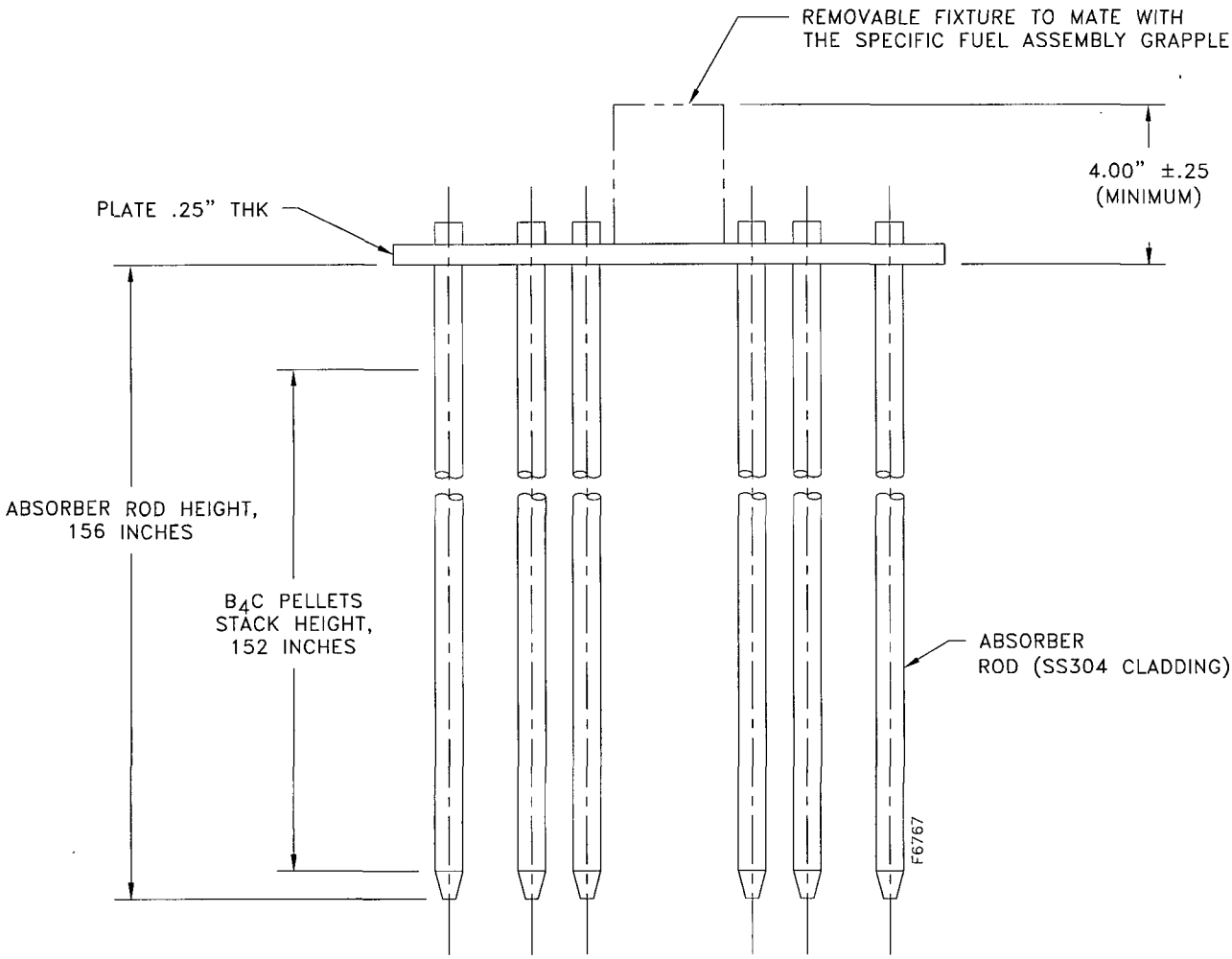

Note: The height of the B_4C Pellet Stack and Absorber Rod is shown for a fuel assembly with an active fuel height of 150 inches. For all fuel assembly designs, the height of the B_4C Pellet Stack shall cover the active fuel length.

Figure 1.4.5-5
Poison Rod Assemblies (PRAs)

Chapter 2
TN-LC Transport Package Structural Evaluation

TABLE OF CONTENTS

2.1 Structural Design 2-1
2.1.1 Discussion 2-1
2.1.2 Design Criteria 2-5
2.1.3 Weights and Centers of Gravity 2-8
2.1.4 Identification of Codes and Standards for Package Design 2-8
2.2 Materials 2-9
2.2.1 Material Properties and Specifications 2-9
2.2.2 Chemical, Galvanic, or Other Reactions 2-9
2.2.3 Effects of Radiation on Materials 2-12
2.3 Fabrication and Examination 2-13
2.3.1 Fabrication 2-13
2.3.2 Examination 2-13
2.4 General Requirements for All Packages 2-14
2.4.1 Minimum Package Size 2-14
2.4.2 Tamper-Indicating Feature 2-14
2.4.3 Positive Closure 2-14
2.5 Lifting and Tie-Down Standards for All Packages 2-15
2.5.1 Lifting Devices 2-15
2.5.2 Tie-Down Devices 2-16
2.6 Normal Conditions of Transport 2-17
2.6.1 Heat 2-18
2.6.2 Cold 2-19
2.6.3 Reduced External Pressure 2-19
2.6.4 Increased External Pressure 2-20
2.6.5 Shock and Vibration 2-20
2.6.6 Water Spray 2-22
2.6.7 Free Drop 2-22
2.6.8 Corner Drop 2-23
2.6.9 Compression 2-23
2.6.10 Penetration 2-23
2.6.11 Fabrication Stresses 2-23
2.6.12 Lid Bolt and Bottom Plug Bolts 2-23
2.6.13 Fatigue Analysis of the Containment Boundary 2-24
2.6.14 Summary of Normal Condition Cask Body Structural Analysis 2-24
2.6.15 Structural Evaluation of the Cask Baskets under Normal Condition Loads 2-25
2.7 Hypothetical Accident Conditions 2-26
2.7.1 Free Drop 2-26
2.7.2 Crush 2-29
2.7.3 Puncture 2-29
2.7.4 Thermal 2-30
2.7.5 Immersion–Fissile Material 2-31

2.7.6 Immersion–All Packages 2-31
2.7.7 Deep Water Immersion Test 2-31
2.7.8 Summary of Damage 2-31
2.8 Accident Conditions for Air Transport of Plutonium 2-33
2.9 Accident Conditions for Fissile Material Packages for Air Transport 2-34
2.10 Special Form 2-35
2.11 Fuel Rods 2-36
2.12 References 2-37
2.13 Appendices 2-39
2.13.1 TN-LC Cask Body Structural Evaluation 2-39
2.13.2 TN-LC Cask Lid and Bottom Plug Closure Bolt Analyses 2-39
2.13.3 TN-LC Cask Lead Slump and Containment Boundary Buckling Analysis 2-39
2.13.4 TN-LC Structural Analysis of the Neutron Shield Shell 2-39
2.13.5 TN-LC Cask Lifting and Tie-Down Devices Structural Evaluation 2-39
2.13.6 TN-LC Cask Containment Boundary Fatigue Evaluation 2-39
2.13.7 TN-LC Lid Closure Evaluation Due to Delayed Impact 2-39
2.13.8 TN-LC Basket Structural Evaluation 2-39
2.13.9 TN-LC Basket Dynamic Load Factor Determination 2-39
2.13.10 TN-LC Transport Package Thermal Expansion Evaluation 2-39
2.13.11 TN-LC Fuel Assemblies and Fuel Elements under Impact Loads 2-39
2.13.12 TN-LC Transport Package Impact Limiter Analysis using LS-DYNA 2-39
2.13.13 TN-LC Transport Cask and Basket ASME Code Alternatives 2-39

LIST OF TABLES

Table 2-1 Containment Vessel Stress Limits 2-40
Table 2-2 Containment Bolt Stress Limits 2-41
Table 2-3 Cask Basket Stress Limits 2-42
Table 2-4 Cask Material Properties 2-43
Table 2-5 Mechanical Lead Properties 2-44
Table 2-6 TN-LC Transport Package Performance Evaluation Overview (NCT) 2-45
Table 2-7 NCT Structural Analyses - List of Individual Loads 2-46
Table 2-8 Summary NCT Load Combinations 2-47
Table 2-9 Summary of HAC Load Combinations 2-48

Chapter 2
TN-LC Transport Package Structural Evaluation

NOTE: References in this Chapter are shown as [1], [2], etc. and refer to the reference list in Section 2.12.

2.1 Structural Design

This Chapter, including its appendices, contains the structural evaluation of the TN-LC transport package. This evaluation consists of numerical analyses which demonstrate that the TN-LC transport package satisfies applicable 10CFR71 [1] requirements for a Type B(U)F-96 package.

2.1.1 Discussion

The structural integrity of the packaging under normal conditions of transport (NCT) and hypothetical accident conditions (HAC) specified in 10CFR71 is shown to meet the design criteria described in Section 2.1.2. The TN-LC packaging consists of three major structural components: the cask body, one of several baskets designed for specific fuel types, and the impact limiters (front and rear). These components are described in Chapter 1 and are shown on drawings provided in Appendix 1.4.1.

The cask body and cask basket, together with the two impact limiters, form the packaging designed to meet all of the applicable 10CFR71 requirements for a Type B(U)F-96 packaging.

The cask body wall thickness (excluding the shield shell and neutron shield) enables the packaging to withstand the HAC puncture event. The shell is designed to be both strong and ductile. The front and rear impact limiters absorb the kinetic energy from the 1 ft NCT and 30 ft HAC free drops.

Numerical analyses have been performed for the NCT and HAC as well as for the lifting and tie-down loads. In general, numerical analyses have been performed for the regulatory events. These analyses of the TN-LC transport package are summarized in the main body of this section and are described in detail in the following appendices:

Appendix 2.13.1	TN-LC Cask Body Structural Analysis
Appendix 2.13.2	TN-LC Cask Lid and Bottom Plug Closure Bolt Analyses
Appendix 2.13.3	TN-LC Cask Lead Slump and Containment Boundary Buckling Analysis
Appendix 2.13.4	TN-LC Structural Analysis of the Neutron Shield Shell
Appendix 2.13.5	TN-LC Cask Lifting and Tie-Down Device Structural Evaluation
Appendix 2.13.6	TN-LC Cask Containment Boundary Fatigue Evaluation
Appendix 2.13.7	TN-LC Lid Closure Evaluation Due to Delayed Impact
Appendix 2.13.8	TN-LC Basket Structural Evaluation
Appendix 2.13.9	TN-LC Basket Dynamic Load Factor Determination

Appendix 2.13.10 TN-LC Transport Package Thermal Expansion Evaluation

Appendix 2.13.11 TN-LC Fuel Assemblies and Fuel Elements under Impact Loads

Appendix 2.13.12 TN-LC Transport Package Impact Limiter Analysis Using LS-DYNA

Appendix 2.13.13 TN-LC Transport Cask and Basket ASME Code Alternatives

2.1.1.1 Transportation Package (Cask)

Drawing 65200-71-01 shows the overall transport configuration of the TN-LC packaging, the parts list, the general arrangement of the cask, the cask body assembly, and the lid assembly. Drawing 65200-71-20 provides the assembly and details of the impact limiter. Drawings 65200-71-40, 50, 60, 70, 80, 90, 96, and 102 provide the basket details.

ASME Code compliance and alternatives are provided in Section 2.1.4 and Appendix 2.13.13.

The shell or cask body cylinder assembly is an open ended (at the top) cylindrical unit with an integral closed bottom end. This assembly consists of concentric inner and outer shells, both SA-240, Type XM19, welded to the top and bottom end massive closure flanges (SA-182, Type FXM19). The closure lid material is SA-182, Grade F304. The annulus between the shells is filled with lead in order to meet specified shielding requirements. Molten lead is poured into the annulus using a carefully controlled procedure.

The single shoulder trunnions are cylindrical, SA-182, Grade F6NM martensitic stainless steel forgings. The pocket trunnions are designed for horizontal lifting of the cask and also support the rear of the cask during rotation of the cask. The single shoulder trunnions have a minimum factor of safety of six against yield stress or ten against ultimate stress; whichever is most restrictive. The single shoulder set of trunnions is designed for use when a single failure-proof lifting system is required. The trunnions are bolted to trunnion attachment blocks which are welded the cask body. Eight 1 in. diameter bolts made of SA-540 Grade B23 CL.1 steel are used to attach the trunnions to the attachment blocks. The trunnions are designed to meet the requirements of ANSI N14.6 [2]. The trunnions are shown in Drawing 65200-71-01.

The shield shell around the neutron shield consists of a cylindrical shell with end caps at each end. The end caps are welded to the outer surface of the cask body outer shell. The shield shell and end caps provide a sealed enclosure for the resin-filled aluminum boxes and retain the resin in the proper location with respect to the fuel pins and fuel assemblies/elements transported in the cask cavity. The shell and end caps are made of SA-240 Type 304 stainless steel.

2.1.1.2 Impact Limiters

The TN-LC packaging includes an impact limiter at each end of the cask body. The limiters are identical, consisting of a stainless steel shell that contains balsa and redwood blocks. These blocks provide the energy absorbing capabilities of the limiters. The inside diameter of the limiter is determined by the outside diameter of the cask body. The length and outside diameter of the limiters are sized to limit the cask impact loads resulting from the 1 ft NCT and 30 ft HAC drop events so that the containment vessel and non-containment structures meet the design criteria.

The impact limiter stainless steel cylinders, gussets, and end plates are designed to position and confine the balsa and redwood blocks to minimize the impact forces and to prevent excessive deformation of the limiters. The stainless steel shell is also designed to support and isolate the wood blocks from ambient moisture and pressure during normal operation.

The impact limiter and attachments are designed to withstand the impact loads and to prevent separation of the limiters from the cask during an impact. The design of the impact limiters and attachments is specified in Appendix 2.13.12.

2.1.1.3 TN-LC Cask Basket Assemblies

The TN-LC cask will accommodate several different basket assemblies each containing a unique payload. The TN-LC-NRUX and TN-LC-MTR baskets consist of a base basket assembly that holds fuel buckets which, in turn, support the spent fuel assemblies. The TN-LC-TRIGA basket is comprised of a stack of basket segments that support the fuel assemblies/elements. The TN-LC-1FA basket has three modes of use. The base TN-LC-1FA basket may be loaded with a single PWR fuel assembly or, with the addition of an internal sleeve, a single BWR fuel assembly. LWR fuel pins may be loaded into the 25 pin can which is placed within the base TN-LC-1FA basket. A detailed description of each basket configuration is provided in Chapter 1, Appendices 1.4.2 through 1.4.5.

The details of each basket are shown on drawings provided in Appendix 1.4.1.

2.1.1.4 TN-LC-NRUX Basket Assembly

The TN-LC-NRUX basket is designed to accommodate up to 26 fuel assemblies. The TN-LC-NRUX basket structure consists of two removable subassemblies. Those subassemblies are comprised of 13 stainless steel tubes welded together, wrapped in a stainless steel plate and capped on the bottom with a perforated stainless steel plate. The two basket tube subassemblies are centered in the basket assembly with a series of guide plates and guide plate supports. Two aluminum basket assembly tube caps are used to confine the contents of each tube and to limit axial motion of the fuel and tube subassemblies with respect to the cask.

The TN-LC-NRUX basket tube assembly bottom covers and tube caps, combined with top and bottom cask spacers, are designed to transmit longitudinal fuel assembly loads to the cask body. The fuel assemblies are supported laterally by the stainless steel tubes, tube wraps, guide plates, guide plate supports, and basket assembly tube. The complete basket assembly is supported laterally by the cask shell. The basket structure is oriented parallel to the axis of the cask and establishes and maintains fuel assembly orientation.

2.1.1.5 TN-LC-MTR Basket Assembly

The TN-LC-MTR basket is designed to accommodate up to 54 MTR fuel elements. The TN-LC-MTR basket is designed to accommodate eighteen fuel buckets. The fuel buckets are fabricated from stainless steel plates that are welded together to form three compartments and a perforated bottom plate. Three stacks of six fuel buckets each are centered in the basket assembly with two stainless steel divider plates and four thick outer plates. The thick outer plates have aluminum rails bolted onto the outside which provide the transition to the cask inside shell.

The basket structure combined with the fuel buckets and top caps is designed to transfer longitudinal fuel assembly and bucket loads to the cask body. The fuel assemblies and buckets are supported laterally by the stainless steel outer plates and aluminum rails. The basket assembly is supported laterally by the cask shell. The basket structure and fuel buckets are oriented parallel to the axis of the cask and establish and maintain fuel orientation.

2.1.1.6 TN-LC-TRIGA Basket Assembly

The TN-LC-TRIGA basket structure is comprised of five stacked TN-LC-TRIGA basket segments and a cask spacer to limit axial cask to basket gaps.

The TN-LC cask is designed to contain and support the TN-LC-TRIGA basket assembly, cask spacer, and up to 180 TRIGA fuel assemblies/elements.

Each of the basket structures consist of a welded assembly of stainless steel tubes (fuel compartments) separated by poison plates and surrounded by a larger stainless steel box or wrap and aluminum support rails.

Longitudinal fuel element loads are applied through the stack of baskets and then to the cask body. The fuel elements are supported laterally by the stainless steel structural boxes. The baskets are supported laterally by the aluminum basket rails. The basket rails are oriented parallel to the axis of the cask and are attached to the periphery of the basket to provide support as well as to establish and maintain basket orientation.

2.1.1.7 TN-LC-1FA Basket Assembly

The TN-LC-1FA basket is comprised of the basket assembly, a fuel pin tube can (when loaded with loose fuel pins), basket cell spacers, and cask spacers to limit axial cask-to-basket gaps.

The TN-LC cask is designed to contain the TN-LC-1FA basket assembly, end caps, one fuel assembly or fuel pin tube can with up to twenty-five fuel pins, and spacers while remaining completely supported by the transport cask.

The basket structure consists of a thick square-shaped welded tube assembly surrounded by poison plates and solid aluminum support rails.

The basket structure is open at each end. Therefore, longitudinal fuel assembly or fuel pin can loads are applied directly to the cask body and not the fuel basket structure. The fuel assembly or fuel pin can is supported laterally by the stainless steel tube assembly. The basket is supported laterally by the basket rails and the cask shell. The solid aluminum basket rails are oriented parallel to the axis of the cask and are attached to the periphery of the basket to provide support and to establish and maintain basket orientation.

A hold down ring is designed for BWR fuel assembly loading to provide lateral clearance for a fuel grapple, if necessary. After fuel loading, the hold down ring is installed to provide continuous transfer of basket loads to the cask.

The 25 pin can is a welded 5x5 square array of stainless steel 1 in. tubes which are wrapped in a stainless steel plate. The bottom of the 25 pin can has a lead filled plug which fits into the TN-

LC cask when the cask bottom plug is removed. The top of the 25 pin can has a bolted closure lid. The closure lid has an integral lifting bail to allow handling of the 25 pin can.

2.1.2 Design Criteria

The packaging consists of the following major components:

- Cask Body
- Impact Limiters

The structural design criteria for these components are described below.

2.1.2.1 Basic Design Criteria

Cask Containment Vessel

The containment vessel consists of the inner shell including the flange inside of the lid inner O-ring, the bottom flange, the bottom plug, and the lid. The lid and bottom plug bolts and inner O-ring are also part of the containment vessel as are the drain and vent port plug bolts and seals. The containment vessel is designed to the maximum practical extent as an ASME Class I component in accordance with the rules of the ASME Boiler and Pressure Vessel Code, Section III, Subsection NB [3]. The Subsection NB rules for materials, design, fabrication and examination are applied to all of the above components to the maximum practical extent. In addition, the design meets the requirements of Regulatory Guides 7.6 [5] and 7.8 [6]. Alternatives to the ASME Code are discussed in Section 2.1.4 and Appendix 2.13.13 of this Chapter.

The acceptability of the containment vessel under the applied loads is based on the following criteria:

- Title 10, Code of Federal Regulations, Part 71
- Regulatory Guide 7.6 Design Criteria
- ASME Code Design Stress Allowables
- Preclusion of Fatigue Failure
- Preclusion of Brittle Fracture

The stresses due to each load are categorized as to the type of stress induced, such as membrane or bending, and the classification of stress, such as primary or secondary. Stress limits for containment vessel components, other than bolts, for NCT (ASME Level A) and HAC (ASME Level D) are given in Table 2-1.

The primary membrane stress and primary membrane plus bending stress are limited to S_m (S_m is the Code allowable stress intensity) and 1.5 S_m, respectively, at any location in the cask for NCT (ASME Level A).

The HAC events are evaluated as short duration, Level D conditions. The stress criteria are taken from Section III, Appendix F of the ASME Code [3]. For elastic quasi-static analysis, the

primary membrane stress intensity (P_m) is limited to the smaller of the 2.4 S_m or 0.7 S_u, and membrane plus bending stress intensities ($P_m + P_b$) are limited to the smaller of the 3.6 S_m or S_u. For the elastic-plastic analysis, the primary membrane stress intensity (P_m) is limited to 0.7 S_u, and membrane plus bending stress intensities ($P_m + P_b$) are limited to 0.9 S_u.

The allowable stress limits for the containment bolts are listed in Table 2-2.

The allowable stress intensity value, S_m, as defined by the Code, is taken at the maximum temperature calculated for each service load condition.

Cask Non-Containment Structure

Certain components, such as the outer shell, the neutron shield shell and the trunnions, are not part of the cask containment vessel but do have structural functions. These components, referred to as non-containment structures, are required to withstand the containment environmental loads, and, in some cases, share the loads with the containment vessel. The outer shell stress limits are the same as those given in Table 2-1 for the containment structure. The neutron shield shell is designed, fabricated and inspected in accordance with the ASME Code Subsection NF [3] to the practical extent. Structural and structural attachment welds are examined by the PT method in accordance with Section V, Article 6 of the ASME Code [8]. The PT examination acceptance standards are in accordance with Section III, Subsection NF, Paragraph NF-5350 or NF-5340 [3].

Seal welds are examined visually, or by PT method, in accordance with Section V of the ASME Code [8]. Electrodes, wire, and fluxes used for fabrication comply with the applicable requirements of the ASME Code, Section II, Part C [9].

The welding procedures, welders and weld operators are qualified in accordance with Section IX of the ASME Code [10].

Cask Baskets

The baskets for all of the fuel types are designed, fabricated and inspected in accordance with the ASME Code Subsection NG [3] to the maximum practical extent. Code alternatives are given in Section 2.1.4 and Appendix 2.13.13.

The basket is designed to meet the heat transfer, nuclear criticality, and the structural requirements. The basket structure must provide sufficient rigidity to maintain a subcritical configuration under all applied loads. The 304 stainless steel members in baskets are the primary structural components. The poison plates in the TRIGA and 1FA baskets are heat conductors and provide the necessary criticality control.

The stress analyses of the basket for normal and accident conditions do not take credit for the poison plates except for through-thickness compression. Therefore, the materials are not required to be Code materials. The quality assurance requirements of NQA-1 are imposed in lieu of NCA-3800. The basket is not Code stamped. Therefore, the requirements of NCA are not imposed. Fabrication and inspection surveillance is performed by the design organization in lieu of an authorized nuclear inspector.

The stress limits for the basket are summarized in Table 2-3. The basis for the allowable stresses for the 304 stainless steel fuel compartments and rails is Section III, Division I, Subsection NG

of the ASME Code [3]. The primary membrane stress and primary membrane plus bending stress are limited to S_m (S_m is the Code allowable stress intensity) and 1.5 S_m, respectively, at any location in the basket for normal (Design and Level A) load conditions.

The HAC events are evaluated as short duration, Level D conditions. The stress criteria are taken from Section III, Appendix F of the ASME Code. For elastic quasi-static analysis, the primary membrane stress intensity (P_m) is limited to the smaller of 2.4 S_m or 0.7 S_u, and membrane plus bending stress intensities ($P_m + P_b$) are limited to smaller of 3.6 S_m or S_u. When evaluating the results from the non-linear elastic-plastic analysis for the accident conditions, the general primary membrane stress intensity, P_m shall not exceed 0.7 S_u and the maximum stress intensity at any location ($P_m + P_b$) shall not exceed 0.9 S_u.

The fuel compartment and/or fuel bucket or fuel pin can response to compressive loads is also evaluated to ensure that buckling will not occur. Basket assembly allowable buckling loads are evaluated based on non-linear, large displacement quasi-static analysis models using ANSYS [7] and LS-DYNA computer codes.

The BWR hold down ring is set between the top of the BWR sleeve and inside surface of the lid assembly when BWR fuel is transported. The hold down ring is used to prevent the BWR sleeve from sliding freely in the axial direction during the NCT or HAC. The basket hold down ring is designed, fabricated, and inspected in accordance with ASME Code Subsection NF to the maximum practical extent.

Impact Limiters

The TN-LC packaging is provided with an impact limiter at each end of the cask body. The limiters are identical. The impact limiter stainless steel cylinders, gussets, and end plates are designed to position and confine the balsa and redwood blocks so that the impact energy is properly absorbed. The stainless steel shell is also designed to support and protect the wood blocks under normal environmental conditions (moisture, pressure, temperature, etc.).

The impact limiter and attachments are designed to withstand the applied loads and to prevent separation of the limiters from the cask during an impact. The design of the impact limiters and attachments are specified in Appendix 2.13.12.

Trunnions

TN-LC cask includes removable trunnions, as shown in the Chapter 1, Appendix 1.4.1 drawings, which are used for on-site lifting and transfer operations. The trunnions are removed prior to transportation and replaced with non-protruding plugs to provide the largest possible stopping distance and, thus, minimize the package impact loads resulting from the HAC drop events.

The evaluation and design criteria for the trunnions are based on the requirements of 10CFR71.45. The details of the evaluation are presented in Section 2.5. The trunnions have a single shoulder and are used for lifting. The trunnions have a minimum factor of safety of six against yield or ten against ultimate; whichever is most restrictive. The design and fabrication of the trunnions are in accordance with the requirements of ANSI N14.6 [2].

Tie Down Devices

TN-LC cask includes a shear key bearing block, located at the mid-length, on the bottom of the cask, designed to react all longitudinal loads encountered during transportation. As shown in drawing 65200-71-21, the package is restrained by saddles and tie-down straps. The saddles and tie-down straps are designed to withstand the vertical, lateral, and rotational loads encountered during transport, while the bearing block resists the cask longitudinal transportation loads. The details of the tie-down evaluation are presented in Section 2.5.

2.1.3 Weights and Centers of Gravity

The weight of the TN-LC transport package is 51,000 lb (approximately 25.50 tons). The weights of the major individual subassemblies are listed in following table. The center of gravity of the cask is located on the axial centerline between 88.75 in. and 110.65 in. from the base of the cask, depending on the basket in use. Note that the payload weight is a bounding weight encompassing all of the payloads included in this safety analysis report.

Weights

Component	**Nominal Weight (lb)**
Cask Empty Weight with Lid and Impact Limiters	43,900
Cask Lid	1,000
Impact Limiters	3,000
Contents (basket and fuel)	7,100
Total Package Weight (Loaded)	**51,000**

2.1.4 Identification of Codes and Standards for Package Design

The cask containment boundary is designed, fabricated and inspected in accordance with the ASME Code Subsection NB to the maximum practical extent. The baskets are designed, fabricated and inspected in accordance with ASME Code Subsection NG to the maximum practical extent. Other cask components (such as the neutron and gamma shielding) are not governed by the ASME Code. The ASME Code alternatives for cask and baskets are specified in Appendix 2.13.13.

2.2 Materials

2.2.1 Material Properties and Specifications

2.2.1.1 Cask Material Properties

This section provides the mechanical properties of materials used in the structural evaluation of the TN-LC cask. Table 2-4 lists the materials selected, the applicable components, and the minimum yield, ultimate, and design stress values specified by the ASME Code, Section II, Part D [9]. Mechanical properties of lead used for gamma shielding are listed in Table 2-5.

2.2.1.2 Impact Limiter Material Properties

Mechanical properties of the energy absorbing wood used in the impact limiters are specified in Appendix 2.13.12.

2.2.2 Chemical, Galvanic, or Other Reactions

The materials of the TN-LC cask have been reviewed to determine whether chemical, galvanic or other reactions among the materials, contents and environment might occur during any phase of loading, unloading, handling or transport.

- The materials from which the TN-LC packaging is fabricated will not experience significant chemical, galvanic, or other reactions in air, helium, or water environments. The interior and exterior of the cask are stainless steel, which is compatible with the pool water and relatively easy to decontaminate.

- During wet loading and unloading, the basket and the cask are submerged in BWR deionized pool water or PWR borated water. The discussion that follows will demonstrate that no significant corrosion or hydrogen generation will occur in this environment for the wetted materials.

- During transportation, the exterior of the cask and impact limiters is exposed to a variety of environmental conditions. Exterior surfaces of the cask and impact limiters are stainless steel. Therefore, the cask exterior is protected from chemical, galvanic or other reactions during transportation.

- During transportation, the interior of the cask is filled with helium. The cask is vacuum-dried if loaded wet. The inert environment precludes general or galvanic corrosion of the interior surfaces.

- Various materials are sealed under air at the fabricator and remain sealed during all normal operations:

  (a) Radial neutron shielding materials and the aluminum resin boxes are sealed between steel shells.
  (b) Lead shielding is sealed between steel shells.
  (c) Wood is sealed inside the stainless steel impact limiter shell.

The free volume in these spaces is small. Consequently the amount of oxygen or moisture is insufficient to cause significant corrosion or galvanic reactions between these materials. The neutron shielding material is inert after it has cured and does not affect the aluminum boxes.

Dissimilar materials in contact in the TN-LC cask, and the material environments are summarized in the following table.

Component	Dissimilar Materials in Contact	Wet Loading and Unloading Environment	Transport Environment
Basket	stainless steel/aluminum stainless steel/neutron absorber	pool water	vacuum dried, helium backfill
Cask (interior)	stainless steel/aluminum	pool water	vacuum dried, helium backfill
Cask	lead/stainless steel aluminum/borated resin	air, sealed at fabricator	air, sealed at fabricator
Cask	alloy steel bolts/stainless steel	air, lubricant	air, lubricant
Cask	fluorocarbon seals/stainless steel	air, helium	air, helium, ambient weather
Cask	Stainless steel/lead (security wire and seal)	not applicable	ambient weather
Cask	carbon steel/transport saddle(1)	not applicable	ambient weather
Impact limiter (IL)	304 stainless steel/nylon (fusible plug) 304 stainless steel/fluorocarbon (fusible plug seal) 304 stainless steel/alloy steel (lift ring bolt)	not applicable	ambient weather
IL	wood/ wood glue/304 stainless steel	not applicable	air, sealed at fabricator

Notes:
1. The transport saddle is not part of this SAR. Points of contact between cask and saddle may be stainless steel, painted carbon steel, or elastomer sheet.

The TN-LC cask materials are shown in the specific Parts Lists on the drawings provided in Chapter 1, Appendix 1.4.1.

The materials exposed to pool water during wet loading and unloading include the stainless steel cask exterior and interior, stainless steel helical thread inserts in stainless steel, aluminum and stainless steel spacers, and stainless steel, aluminum, and aluminum-based neutron absorbers in the basket.

Potential sources of chemical or other reactions are galvanic interaction between stainless steel (300 series, Grades XM19 and 6NM) and aluminum or non-galvanic corrosion of the cask and materials in water.

Aluminum and Stainless Steel

Both aluminum and stainless steel develop passive surface oxide layers that preclude any significant corrosion, galvanic or otherwise, except in aggressive or high-chloride environments. No damage to the aluminum or stainless steel will occur due to the low chloride content in spent fuel pool water and the short duration of immersion. Stainless steels are widely used for long-

term immersion as wet racks in both borated and non-borated spent fuel pools, and aluminum is widely used in the production of borax and boric acid.

Aluminum-Based Neutron Absorbers

Two neutron absorbers may be used: borated aluminum and aluminum/boron carbide metal matrix composites (MMC).

Borated aluminum and MMCs have been tested and shown to behave similarly to aluminum 1100 during simulated short-term spent fuel pool immersion.

Cask Exterior

The exterior of the cask is made from stainless steel and will not cause significant chemical, galvanic or other reactions in air or water environments.

Potential galvanic couples are:

- The brass trunnion bolt seal caps, if used, and the stainless trunnions during wet loading. The bolt covers are not-important-to-safety components.
- The low alloy steel bolts and stainless steel. The lid, test, and bottom plug bolts are not directly exposed to the weather, road salt, etc., because they are covered by the impact limiters. The impact limiter hoist ring replacement bolts and the trunnion plug bolts will be exposed.

In all these cases, minor sacrificial galvanic corrosion of these anodic (non-stainless) components will have no adverse effect on an important-to-safety function.

Lubricants and Cleaning Agents

A lubricant may be used to coat the threads and shoulders of the bolts and the contact areas of the trunnions during lifting operations. Lubricants are generally selected from the list of materials approved for contact with the pool water at the facility where wet loading occurs. Cask components are cleaned to remove all temporary markings, expendable materials, etc., during fabrication, using approved procedures. After loading, exterior surfaces of the cask will be decontaminated using procedures and decontamination agents approved at the loading facility. The cleaning agents and lubricants have no significant effect on the cask materials.

Hydrogen Generation

The TN-LC cask may be wet loaded; therefore, the following discussion applies entirely to the potential for the generation of hydrogen inside the cask during wet loading.

Hydrogen gas will be generated in the cask due to reaction between the water and aluminum and due to radiolysis of the water. The resulting concentration of hydrogen depends on the surface condition of the aluminum and the water chemistry. The total surface area of exposed aluminum is small, and the cask lid is off or the cask is vented during loading operations, so, any hydrogen generated will be vented to the site loading area and no concentration of hydrogen can occur.

Effect of Chemical and Galvanic Reactions

There are no significant reactions that could reduce the overall integrity of the cask or its contents during transportation. The cask and fuel cladding thermal properties are provided in Chapter 3. The emissivity of the fuel compartment is 0.3, which is typical for stainless steel surfaces. If the stainless steel is oxidized, this value would increase, improving heat transfer. The fuel emissivity values used in the heat transfer calculations are typical for oxidized materials. Therefore, the passivation reactions would not reduce the thermal properties of the component cask materials or the fuel cladding.

There are no reactions that would cause binding of the mechanical surfaces or the fuel-to-basket compartment boxes due to galvanic or chemical reactions.

There is no significant degradation of any important-to-safety components caused directly by the effects of the reactions or by the effects of the reactions combined with the effects of exposure of the materials to neutron or gamma radiation, high temperatures, or other possible conditions.

2.2.3 Effects of Radiation on Materials

Gamma radiation has no significant effect on metals. The effect of fast neutron irradiation of metals is a function of the integrated fast neutron flux. Studies on fast neutron damage in aluminum, stainless steel, and low alloy steels rarely evaluate damage below 10^{17} n/cm^2 because it is not significant. Extrapolation of the data available down to the 10^{14} n/cm^2 range confirms that there will be virtually no neutron damage to any of the cask metallic components.

The neutron absorbers consist of aluminum with boron added in the inert form of boron carbide, aluminum diboride, or titanium diboride. The durability of these materials in the radiation environment is similar to that of aluminum.

Seals

To evaluate the irradiation damage to the seals, the equivalent dose rates calculated in Chapter 5 can be converted to absorbed dose using quality factors from 10CFR20.1004(b) [20]. The absorbed dose in the seals is estimated to be 2×10^4 rad/y, well below the polymer damage threshold of 10^6 rad [21].

Neutron Shielding

The neutron shield material is a proprietary resin (VYAL B or Resin F). They have been developed and tested for applications in various TN storage and transportation casks.

2.3 Fabrication and Examination

2.3.1 Fabrication

Fabrication of the TN-LC cask conducted per the requirements of the ASME Code to the maximum extent possible. See Sections 2.1.2 and 2.1.4 above for additional information.

2.3.2 Examination

Examination of the TN-LC cask during and after fabrication is conducted per the requirements of the ASME Code to the maximum extent possible. See Sections 2.1.2 and 2.1.4 above for additional information.

2.4 General Requirements for All Packages

The TN-LC transport package is designed to comply with the general standards for all packages specified by 10CFR71.43.

2.4.1 Minimum Package Size

The overall package dimensions of approximately 230 in. long and 66 in. in diameter exceed the minimum dimension requirement of 10 cm (4 in.) [1].

2.4.2 Tamper-Indicating Feature

The primary access path into the package is through the closure lid. During transport, the front (top) impact limiter entirely covers and prevents access to the cask closure lid. The vent port, test port, drain port and bottom plug are smaller access paths and are all covered by the impact limiters during transport. A security wire seal is installed in the front impact limiter above an attachment bolt prior to each shipment. The presence of this seal demonstrates that unauthorized entry into the package has not occurred.

2.4.3 Positive Closure

Positive fastening of all access openings through the containment vessel is accomplished by bolted closures which preclude unintentional opening. In addition, the presence of the impact limiters and security seal described in Section 2.4.2 provide further protection against unintentional opening.

2.5 Lifting and Tie-Down Standards for All Packages

2.5.1 Lifting Devices

The TN-LC cask includes removable trunnions, as shown on drawing 65200-71-01, which are used for on-site lifting and transfer operations. The detailed structural evaluations of the trunnions are contained in Appendix 2.13.5. This section provides a summary of the structural analysis of the TN-LC cask trunnions.

10CFR71.45(a) states that a minimum factor of safety of three against yield is required for all lifting attachments which are structural parts of the package. In addition, the package must be designed such that failure of any lifting device under excessive load would not impair the ability of the package to meet the other requirements of 10CFR71. One set of trunnions will be provided for the TN-LC transport package lifting. The trunnions have a single shoulder and are designed as single failure proof.

Appendix 2.13.1 provides the global stresses in the cask wall due to the lifting loads on the trunnions. The maximum global stress intensities in the containment vessel and outer shell are presented in Appendix 2.13.1, Table 2.13.1-7. The local stress intensities in the cask wall due to the 6 g lifting load are presented below. The maximum stress intensity due to the 6 g lifting load is 29.5 ksi (Appendix 2.13.5, Table 2.13.5-6). These stresses are less than the yield stress of the outer shell material (43.3 ksi, SA-240 Gr. XM-19 at 300°F). Therefore, the requirements of 10CFR71.45(a) are met. The stress analyses of the front trunnion and trunnion flange bolts are also provided in the following sections.

Stress at Trunnion/Cask Outer Shell Intersection

The local stresses induced in the outer shell cylinder by the trunnions are calculated using "Bijlaard's" method. The neutron shield shell is not considered to strengthen either the trunnions or outer shell. The trunnion is approximated by an equivalent attachment so that the curves of the Reference WRC 107 [13] can be used to obtain the necessary coefficients. These resulting coefficients are inserted into blanks in the column entitled "Read Curves For," in a standard computation form. The stresses are calculated by performing the indicated multiplication in the column entitled "Compute Absolute Values of Stress and Enter Result." The detailed calculation is shown in Table 2.13.5-5 of Appendix 2.13.5.

Trunnion Bolt Stresses

The trunnion flange is attached to the outer shell by 1 in. 8UNC bolts constructed from SA-540 Gr. B23 Cl. 1 material. The bolted flange is tightly fitted into the trunnion attachment block which is welded to the cask outer shell. This trunnion block recess provides a bearing area between the outside perimeter of the trunnion flange and the block. The radial clearance between the bolt shank and trunnion flange bolt holes is large enough so that shear loads are carried by the trunnion flange-to-block recess interface and not the bolts. The bolts develop only the tensile load due to trunnion moment and thermal loads. Stresses are summarized in the following table.

Summary of Lifting Stresses - Single Shoulder Trunnions (ksi)

	Calculated (6 g)	Allowable (S_y)	Margin[2]	Calculated (10 g)	Allowable (S_u)	Margin[2]
Stress intensity in section A-A[1]	43.1	84.6	0.96	71.8	115.0	0.60
Bolt tensile stress	39.0	140.3	2.59	65.1	165.0	1.54
Stress intensity in trunnion flange	14.1	84.6	4.99	23.5	115.0	3.89
Weld bending stress	13.5	43.3	2.21	22.5	94.2	3.19
Outer cask shell stress	29.5	43.3	0.47	49.2	94.2	0.91

Notes:
1. See Figure 2.13.5-1 of Appendix 2.13.5 for the location of Section A-A.
2. Margin is calculated as: allowable stress/calculated stress -1.

Trunnion Stress Results

Based on the above calculations, the design meets the requirements of 10CFR71. Note also that the lowest safety margin occurs at the trunnion. Therefore, an excessive load on the trunnion will cause failure of the trunnion and not affect the capabilities of the cask to meet Part 71 requirements.

2.5.2 Tie-Down Devices

10CFR71.45 (b) (1) requires that a system of tie-down devices that is a structural part of the package must be capable of withstanding, without generating stress in any material of the package in excess of its yield strength, a static force applied to the center of gravity of the package having a horizontal component along the direction in which the vehicle travels of 10 times the weight of the package.

The TN-LC transport package is secured during transport to the transportation skid. A shear key extending from the transport skid into a pocket in the cask is designed to transfer the longitudinal cask transport loads to the skid. The vertical and transverse cask transport loads are reacted by saddles and tie-down straps. Detailed tie-down analyses are described in Appendix 2.13.5. The results of the analysis are provided in the table below. The bending stress in the pad plate remains well below the allowable value. The shear load is transmitted from the bearing block to the cask structural shell through the pad plate.

Based on the table below, the minimum margin of safety occurs in the base metal junction between the pad plate and the cask outer shell. Therefore, under excessive load, the weld between the shear key pad plate and the cask structural shell would fail in shear, leaving the cask body intact without impairing the ability of the package to meet the other requirements of 10CFR71.

Summary of Longitudinal Stresses - Shear Key Assembly (ksi)

		Calculated (10 g)	Allowable (S_y or $0.6\times S_y$)	Margin[1]
Shear key slot	Bearing stress	14.9	84.6	4.68
	Bending stress	3.4	84.6	24.08
	Shear stress	6.2	50.8	7.25
	Maximum stress intensity	12.8	84.6	5.63
	Bending stress in the weld with pad plate	16.1	84.6	4.26
Weld between pad plate and cask outer shell	Shear stress in base metal	7.2	20.2	1.79

Note:
1. Margin is calculated as allowable stress/calculated stress -1.

2.6 Normal Conditions of Transport

Overview

This section describes the response of the TN-LC transport package to the loading conditions specified by 10CFR71.71. The design criteria are described in Section 2.1.2. These criteria are selected to ensure that the package performance standards specified by 10CFR71.43 and 71.51 are satisfied. Under NCT, there will be no loss or dispersal of radioactive contents, no significant increase in external radiation levels, and no substantial reduction in the effectiveness of the packaging.

Detailed structural analyses of various TN-LC packaging components subjected to individual loads are provided in the Appendices to this Chapter. The limiting results from these analyses are used in this section to quantify package performance in response to the NCT load combinations, specified in 10CFR71.71 and Regulatory Guide 7.8. Table 2-6 provides an overview of the performance evaluations reported in each load combination subsection. Each subsection provides the limiting structural analysis result for the affected cask component(s) in comparison to the established design criteria. This comparison permits the minimum margin of safety for a given component subjected to a given loading condition to be readily identified. In all cases, the acceptability of the TN-LC packaging design with respect to established criteria, and, consequently, with respect to 10CFR71 performance standards, is demonstrated.

The structural analysis of the cask body is presented in Appendix 2.13.1 and covers a wide range of individual loading conditions. The stress results from the various individual loads must be combined in order to represent the stress condition in the cask body under the specified condition evaluated in this section. An explanation of the reporting format used for the results, and the stress combination technique used in applying the results from Appendix 2.13.1 is provided here.

Reporting Method for Cask Body Stresses

Appendix 2.13.1 provides the detailed description of the structural analyses of the TN-LC cask body. That Appendix describes the detailed ANSYS [7] model used to analyze various applied loads. Table 2-7 identifies the individual loads analyzed which are applicable to NCT. Some of these individual loads are axisymmetric (e.g., pressure) and others are asymmetric (e.g., gravity). Due to the non-linearities associated with contact elements, it is not possible to run the separate individual load cases and then combine the results by superposition. Rather, it is necessary to run each of the individual load cases or combined load cases independently and post-process the results separately. Table 2-7 identifies the combined load cases for NCT. A total of 26 separate loading conditions (individual and combined load cases) are evaluated. Refer to Section 2.13.1.10 of Appendix 2.13.1 for the method of obtaining the stress results from the ANSYS runs and Section 2.13.1.7 for detailed descriptions of how the loads were combined and reported.

A. Individual load conditions: cases 1-12, see Table 2-7. The stress results are presented in Tables 2.13.1-2 to 2.13.1-18. Some of the stress results from these runs are used for fatigue analysis.

B. Load combinations for NCT: cases 13-26, see Table 2-8. The stress results are presented in Tables 2.13.1-23 to 2.13.1-36.

For the increased external pressure load combination, it is assumed that the TN-LC cask cavity is at 0 psia. Since the specified load combination condition is 20 psia, the net differential pressure acting on the cask body is 20 psi. However, for conservatism, a 25 psi external pressure is used for the load combinations.

2.6.1 Heat

Chapter 3 describes the thermal analyses performed for the TN-LC transport package subjected to hot environment conditions. These thermal analysis results are used to support various aspects of the structural evaluations as described in the following subsections.

2.6.1.1 Summary of Temperatures and Pressures

Allowable stresses for packaging components are a function of the component temperatures. They are based on calculated maximum temperatures or conservatively selected higher temperatures. Table 3-10 of Chapter 3 summarizes significant temperatures calculated for the TN-LC transport package subjected to hot environment conditions. These temperatures are used to establish the allowable stress values for every NCT evaluated in this Safety Analysis Report.

The thermal analysis presented in Chapter 3 also provides the average cavity gas temperature under hot environment conditions. This value is used to determine the Maximum Normal Operating Pressure (MNOP). The resulting calculated cask MNOP is 16.9 psig. For the purpose of the structural analysis of containment, a value of 30 psig is conservatively assumed. Because of the thick-walled construction of the TN-LC transport package containment vessel, this pressure loading provides a minimal contribution to calculated stress intensities. This pressure loading is analyzed using ANSYS as described in Appendix 2.13.1. The results using the 3D ANSYS model are reported in Table 2.13.1-3 of Appendix 2.13.1.

2.6.1.2 Differential Thermal Expansion

The thermal expansion evaluations of the TN-LC cask cavity and baskets in both the radial and the axial directions are described in Appendix 2.13.10. Based on the results of these analyses, there is adequate clearance between the various components of the basket and cask to allow free thermal expansion. Consequently, no significant stress will develop in the TN-LC cask due to thermal expansion. The maximum allowable irradiated fuel lengths and minimum axial and radial basket and basket component clearances are shown in Appendix 2.13.10, Tables 2.13.10-7 to 2.13.10-12.

2.6.1.3 Stress Calculations

The thermal analysis of the TN-LC packaging, described in Chapter 3, is performed using a 3D ANSYS model. The temperature distribution from this analysis is used to perform an ANSYS structural thermal stress analysis of the containment vessel with details given in Appendix 2.13.1.

Containment vessel stresses for the hot environment NCT are obtained from a combined load case (Load Case 13) as indicated in Table 2-8. For this condition, it is assumed that the cask is in its NCT configuration, mounted horizontally on the transport skid, and supported by the saddles and tie down straps. The combined loads included in the run are as follows:

- Bolt preload

- Gravity (1 g down)
- 30 psig internal pressure
- Thermal hot

2.6.1.4 Comparison with Allowable Stresses

The TN-LC cask stress results for Load Case 13 are reported in Table 2.13.1-23 of Appendix 2.13.1. As shown in the table, all the calculated stress values are well below the Code allowables.

2.6.2 Cold

The Regulatory Guide 7.8 [6] cold environment load combination requires all cask components to be in thermal equilibrium at -40°F. As with the hot environment, it is assumed that the cask is in its NCT configuration, mounted horizontally on the transport skid, and supported by the saddles and tie down straps. The combined loads included in this analysis are as follows:

- bolt preload
- gravity (1g down)
- 25 psig external pressure
- -40°F thermal uniform temperature

The cold load case is evaluated in Appendix 2.13.1. The stress results for this load case (Load Case 14) are reported in Table 2.13.1-24 of Appendix 2.13.1. As shown in the table, all the calculated stress values are well below the Code allowables.

2.6.3 Reduced External Pressure

Containment vessel stresses for the 3.5 psia ambient NCT pressure are obtained from a combined load case (Load Case 16) as indicated in Table 2-8. The conservatively assumed MNOP of 16.9 psig results in a net pressure loading of 28.1 psi (16.9 + 14.7 – 3.5) (cask stresses are conservatively calculated based on 30 psi pressure). For this condition, it is assumed that the cask is in its normal transport configuration, mounted horizontally on the transport skid, and supported by the saddles and tie down straps. The combined loads included in the run are as follows:

- Bolt preload
- Gravity (1 g down)
- 30 psig internal pressure
- Thermal hot

The stress results for this load case (Load Case 16) are reported in Table 2.13.1-26 of Appendix 2.13.1. As shown in the table, all the calculated stress values are well below the Code allowables.

2.6.4 Increased External Pressure

Containment vessel stresses for the NCT, 20 psia ambient, are obtained from a combined load case (Load Case 15) as indicated in Table 2-8. This load combination is similar to the cold environment load combination with the exception of the pressure loading. The conservatively assumed minimum cask cavity pressure of 0 psia results in a net external pressure loading of 20 psi (25 psi is conservatively used). For this condition, the cask is in the horizontal orientation mounted on the transport skid, and supported by the saddles and tie down straps. The combined loads included in the run are as follows:

- Bolt preload
- Gravity (1 g down)
- 25 psig external pressure
- -20°F thermal cold

The stress results for this load case are provided in Appendix 2.13.1, Table 2.13.1-25. As shown in the table, all the calculated stress values are well below the Code allowables.

2.6.5 Shock and Vibration

Shock

The transport rail shock loads used to evaluate the TN-LC cask are based on NUREG 766510 [15] which specifies a maximum inertia loading of 4.7 g in each of the three x-y-z coordinate directions:

- Vertical 4.7 g
- Longitudinal 4.7 g
- Lateral 4.7 g

The resultant transverse load is $(4.7^2 + 4.7^2)^{1/2} = 6.65$ g.

The stresses due to the transport rail shock load case are obtained from combined load cases (Load Cases 19 and 20) as indicated in Table 2-8. Table 2.13.1-29 lists the combined stresses under hot thermal conditions where the load combination is performed for the maximum temperature thermal stresses. Lid bolt preload, internal pressure, and the thermal effects are included.

In addition, Table 2.13.1-30 lists the combined stresses under -40°F thermal conditions where the load combination is performed for the -40°F thermal stresses (bounding values of -20°F and -40°F thermal stresses are used for the load combinations). Lid bolt preload and external pressures are also included.

As shown in these tables, all the calculated stress values are well below the Code allowables.

The transport truck shock loading used to evaluate the TN-LC cask are based on truck bed accelerations in ANSI N14.23 [14] which are:

- Vertical 3.5 g
- Longitudinal 2.3 g
- Lateral 1.6 g

The resultant transverse load is $(3.5^2 + 1.6^2)^{1/2} = 3.85$ g.

The truck shock loadings are less than the rail car shock loadings; therefore, the rail car shock loadings are used for structural analysis of the cask body.

Vibration

The input loading conditions used to evaluate the TN-LC cask for transport rail vibration are obtained from NUREG 766510 [15]. The peak inertia values used are:

- Vertical 0.37 g
- Longitudinal 0.19 g
- Lateral 0.19 g

The resultant transverse load is $(0.37^2 + 0.19^2)^{1/2} = 0.416$ g.

The stresses due to the transport rail vibration load cases are obtained from combined load cases (Load Cases 17 and 18) as indicated in Table 2-8. Table 2.13.1-27 lists the combined stresses under hot thermal conditions where the load combination is performed for the maximum temperature thermal stresses. Lid bolt preload, internal pressure and the thermal effects are included. In addition, Table 2.13.1-28 lists the combined stresses under -40°F thermal conditions where the load combination is performed for the -40°F thermal stresses (bounding values of -20°F and -40°F thermal stresses are used for the load combinations). Lid bolt preload and external pressure are also included.

The input truck transport vibration loading conditions used to evaluate the TN-LC cask are also obtained from truck bed accelerations given in ANSI N14.23 [14]. The peak inertia values used are:

- Vertical 0.60 g
- Longitudinal 0.30 g
- Lateral 0.30 g

The resultant transverse load is $(0.6^2 + 0.3^2)^{1/2} = 0.67$ g.

Since vibration accelerations are higher on a truck than on a rail car, the truck vibration loads are considered bounding. The maximum stress intensity generated by truck vibration is computed by extrapolating from the maximum stress intensity obtained in the railcar vibration load case. The truck vibration load is roughly 150 percent of the railcar vibration load. The maximum stress intensity in the TN-LC cask due to railcar vibration is less than 1.0 ksi (Table 2.13.1-12) at the containment boundary and 1.2 ksi at the outer shell (the outer shell is not a containment

boundary). Therefore, the maximum stress intensity in the TN-LC cask due to truck vibration would be roughly 1.5 ksi and 1.8 ksi at the outer shell component.

The fatigue analysis of the cask containment boundary is contained in Appendix 2.13.6 and summarized in Section 2.6.13 of this Chapter.

2.6.6 Water Spray

All exterior surfaces of the TN-LC cask body are metal and, therefore, not affected by soaking. Additionally, the outer shells of the impact limiters completely enclose the wood crushable medium. Therefore, no structural degradation will result from water absorption. The water spray condition is, therefore, of no consequence to the TN-LC packaging.

2.6.7 Free Drop

2.6.7.1 Transportation Cask

Two drop orientations are considered credible for the NCT 1 ft free drop. The structural response of the TN-LC cask body is evaluated for a 1 ft end drop of the package on the bottom end, a 1 ft end drop of the package on the lid end, and a 1 ft side drop. The impact limiters are installed for these evaluations. The assessment of cask body stresses follows the same logic as that established in the previous sections. For the three drop cases, the evaluations are performed for both the high temperature environment and the -40°F minimum transport temperature. These analyses are detailed in Appendix 2.13.1 for the cask containment and structural components and Appendix 2.13.4 for the shield shell that encloses the neutron shield. The impact loads used in these analyses are developed in Appendix 2.13.12, the cask drop analysis.

The load combinations performed to evaluate these drop events are indicated in Table 2-8. In all cases, bolt preload effects and fabrication stress are included. For the hot environment condition, thermal stress load, 30 psig internal pressure, and impact load cases are combined. For the cold environment evaluation, -40°F thermal stress (bounding values of -20°F and -40°F thermal stresses are used for the load combinations), 25 psi external pressure, and impact load cases are combined.

Table 2.13.1-33 lists the combined stress intensities for the bottom end drop under hot environment conditions. Table 2.13.1-34 lists the combined stress for the bottom end drop under cold environment conditions.

Table 2.13.1-31 lists the combined stress intensities for the lid end drop under hot environment conditions. Table 2.13.1-32 lists the combined stress for the lid end drop under cold environment conditions.

Table 2.13.1-35 lists the combined stress intensities for the side drop under hot environment conditions. Table 2.13.1-36 lists the combined stress for the side drop under cold environment conditions.

Appendix 2.13.4 presents the structural analysis of the neutron shield shell of the TN-LC transport package. The shield shell consists of a cylindrical shell section and closure plates at each end which connect the shell to the cask body. The shell is evaluated for NCT drops including an internal pressure of 25 psig with the shell temperature at 300 °F. The analysis is

done using ANSYS for both side and end drop events. The resulting stresses are compared to the allowable stress limits defined in Chapter 2 to assure that the design criteria are met. The results of the analysis are presented in Table 2.13.4-2, and these results demonstrate that the neutron shield shell and associated weld stresses remain below allowable limits during the NCT free drops.

2.6.7.2 Basket Assembly

The basket evaluation for the NCT free drops is contained in Section 2.6.15.1 below.

2.6.8 Corner Drop

This test does not apply to the TN-LC transport package since the package weight is in excess of 100 kg (220 lb).

2.6.9 Compression

This test does not apply to the TN-LC transport package since the package weight is in excess of 5,000 kg (11,000 lb).

2.6.10 Penetration

Due to lack of sensitive external protuberances, the one-meter (40 in.) drop of a 13 lb steel cylinder of 1-1/4 in. diameter with a hemispherical head is of negligible consequence to the TN-LC transport package.

2.6.11 Fabrication Stresses

The TN-LC cask is subjected to stresses during the lead pouring process and subsequent cool down. However, the cask stresses due to the molten lead pouring process and subsequent freezing to room temperature are small. The differential contraction induced stresses during the –40°F normal condition are negligible. Further, the fabrication stresses remaining in the cask components at the time the cask will be used for transportation will be insignificant.

2.6.12 Lid Bolt and Bottom Plug Bolts

The lid bolts are analyzed for the following loading conditions: operating preload, gasket seating load, internal pressure, temperature changes, impact loads, and puncture loads. The analysis is based on NUREG/CR 6007 [16].

The bolt preload is calculated to withstand the worst case load combination and to maintain a clamping (compressive) force on the closure joint. Based upon the load combination results (see Appendix 2.13.2, Section 2.13.2.5); it is shown that a positive (compressive) load is maintained on the clamped joint for all NCT load combinations.

A summary of the calculated stresses is listed in Table 2.13.2-7 of Appendix 2.13.2.

The lid bolt fatigue analysis is also presented in Section 2.13.2.6 of Appendix 2.13.2. The results are summarized in Table 2.13.2-8 of Appendix 2.13.2. As shown from the table, the total damage factor is less than 1 and the cask lid bolts will not fail due to fatigue at 75 round-trip shipments.

The bottom plug bolts are also evaluated (Section 2.13.2.7) using the same methodology as described above. The results show the bolt loads are bounded by the preload and that the bolt stresses remain below allowables.

2.6.13 Fatigue Analysis of the Containment Boundary

The purpose of the fatigue analysis is to show that the containment vessel stresses are within acceptable limits under normal transport conditions. This is done by determining the fatigue damage factor for each normal transport event at locations on the containment vessel with the highest stresses. The cumulative fatigue damage or usage factor for all of the events is conservatively determined by adding the fatigue usage factors for the individual events, assuming these maximum stress intensities occur at the same location.

The fatigue analysis is based on the procedure described in Regulatory Guide 7.6 [5] and ASME Code Section III [3]. When determining the stress cycles, consideration is given to the superposition of individual loads which can occur together and produce a total stress intensity range greater than the stress intensity range of individual loads. Also, the maximum stress intensities for all individual loads are conservatively combined simultaneously. The fatigue evaluation is based on 1000 shipments for the cask. The following sequence of events was assumed for the fatigue evaluation.

1. Operating bolt preload
2. Test pressure
3. Road shock/vibration
4. Pressure and temperature fluctuations
5. 1 ft normal condition drop

Details of the calculation are described in Appendix 2.13.6.

The results of the fatigue evaluation show that the total damage factor for the cask shell (inner and outer) is 0.027 (Appendix 2.13.6, Table 2.13.6-1) and 0.087 (Appendix 2.13.6, Table 2.13.6-2) for the rest of the containment vessel after 1000 shipments. Both values are less than 1.0 demonstrating that the fatigue effects on the TN-LC containment are acceptable.

A separate fatigue analysis of the lid bolts is presented in Appendix 2.13.2.

2.6.14 Summary of Normal Condition Cask Body Structural Analysis

The following table lists the highest stress ratio in each cask component and also identifies the load combination tables where these stress intensities are given in Appendix 2.13.1. The stress limits based on the Section 2.1.2 structural design criteria are also listed in the table below.

Comparison of the Maximum Stress Intensities with Allowables

Component	Calculated Stress Intensity (ksi)	Allowable Stress Intensity (ksi)	Stress Ratio	Stress Result Table
Outer Shell	28.2	$P_m = 30.9$	91.2%	2.13.1-36
Inner Shell	19.9	$P_m = 30.9$	64.5%	2.13.1-35
Lid	24.2	$P_l + P_b = 29.0$	83.4%	2.13.1-31
Top Flange	17.1	$P_m = 30.9$	55.3%	2.13.1-35
Bottom Flange	30.6	$P_l + P_b = 46.4$	66.1%	2.13.1-35
Bottom Plug	9.3	$P_l + P_b = 29.0$	32.0%	2.13.1-33

From the analysis results presented in the above table, it can be shown that the NCT loads will not result in any structural damage to the cask and that the containment function of the cask will be maintained.

2.6.15 Structural Evaluation of the Cask Baskets under Normal Condition Loads

2.6.15.1 Basket Stress Analysis

The loading conditions considered in the evaluation of the fuel basket consist of inertial loads resulting from normal inertial loading (1 ft drop) and thermal loads. The inertial loads of significance for the basket analysis are those transverse to the cask and basket longitudinal axes, so that the loading from the fuel assemblies is applied normal to the basket structures and transferred to the cask wall by the basket.

The structural adequacy of the basket assemblies under an NCT free drop are analyzed in Appendix 2.13.8. The baseline g loads and drop orientations used for the structural analysis of the baskets are described in Appendix 2.13.12. The baseline g loads are multiplied by the dynamic load factor calculated in Appendix 2.13.9. The maximum g loads used for the basket structural evaluations are summarized in Section 2.13.8.3 of Appendix 2.13.8. The stress analysis of the basket due to inertial and thermal loads is also described in detail in Appendix 2.13.8. Based on the results of analyses shown in Appendix 2.13.8, all the basket designs meet the ASME Code Subsection NG requirements [3]. Therefore, the basket is structurally adequate and it will properly support and position the fuel assemblies under normal loading conditions.

2.7 Hypothetical Accident Conditions

Overview

This section describes the response of the TN-LC transport package to the hypothetical accident condition loads specified by 10CFR71.73. The design criteria are described in Section 2.1.2. These criteria are selected to ensure that the packaging performance standards specified by 10CFR71.51 are satisfied.

The presentation of the HAC analyses and results is accomplished in the same manner as that used for the NCT analysis. Table 2-9 provides an overview of the performance evaluations presented in this section. The detailed analyses of the various packaging components under different loading conditions are presented in the Appendices to this Chapter. The limiting results for the specified HAC load are taken from the Appendices and summarized here along with comparisons with the established design criteria. In all cases, the acceptability of the TN-LC packaging design with respect to HAC loads is demonstrated.

An analytical evaluation of the impact limiters is presented in Appendix 2.13.12. The analytical results are used to determine the baseline g loads used in the cask and basket structural evaluations.

Reporting Method for Containment Vessel Stresses

Appendix 2.13.1 provides the detailed description of the structural analyses of the TN-LC cask body. Table 2-9 provides a matrix of the loads that were analyzed to determine the cask body stresses for the hypothetical accident conditions. The combined load cases for the accident conditions of transport were performed in load cases 27 – 37 and 41-42, as shown in Table 2-9. The stress results are presented in Tables 2.13.1-41 through Table 2.13.1-55 of Appendix 2.13.1. Refer to Section 2.13.1.10 of Appendix 2.13.1 for the method of obtaining the stress results from the ANSYS runs.

2.7.1 Free Drop

The response of the TN-LC Packaging is evaluated for a free drop from a height of 30 ft onto an unyielding surface at various orientations. The inertial loading applied to the TN-LC transport package components is determined in the dynamic analysis presented in Appendix 2.13.12.

The stresses in the cask body are reported for the following drop orientations:

- End drop onto bottom end
- End drop onto lid end
- Side drop
- C. G. over corner drop

The 5° slap down impact on lid end, 5° slap down impact on bottom end, 10° slap down impact on lid end, and 10° slap down impact on bottom end were assumed to be bounded by a 130 g side drop evaluation.

The response of the baskets to the HAC drops is discussed in Section 2.7.8.

Appendix 2.13.4 presents the structural analysis of the neutron shield shell of the TN-LC transport package. The neutron shield shell consists of a cylindrical shell section and closure plates at each end which connect the shell to the cask body. The shell is evaluated for HAC drops including an internal pressure of 25 psig with the shell temperature at 350°F. The analysis is done using ANSYS for both side and end drop events. The resulting stresses are compared to the allowable stress limits defined in Chapter 2 to assure that the design criteria are met. The results of the analysis are presented in Table 2.13.4-2, and these results demonstrate that the shield shell and associated weld stresses remain below allowable limits during the HAC free drops.

2.7.1.1 End Drop

The dynamic impact analysis of the TN-LC transport package shows that the maximum expected inertia loading from the 30 ft end drop is 82.4 g as described in Appendix 2.13.12. As described in Appendix 2.13.1, Section 2.13.1.2.4, a conservative 95 g is used for cask structural evaluation. Because of the symmetry of the cask and impact limiters, these values are applicable for both the bottom end drop and lid end drop.

The load combinations performed to evaluate these drop events are indicated in Table 2-9. Table 2.13.1-41 through 2.13.1-44 of Appendix 2.13.1 list the combined stress intensities for the bottom end drop and lid end drop load combinations. Based on the results shown in these tables, all the stresses are below the Code allowables

2.7.1.2 Side Drop

The dynamic analysis of the 30 ft side drop provided a baseline inertial loading of 75 g as described in Section 2.13.1.2.4 of Appendix 2.13.1. The load combinations performed to evaluate these drop events are indicated in Table 2-9. Tables 2.13.1-45 through 2.13.1-48 of Appendix 2.13.1 list the combined stress intensities for the side drop load combinations. Based on the results shown in these tables, all the stresses are below the Code allowables.

2.7.1.3 Corner Drop

The response of the TN-LC package to the 30 ft corner drops was analyzed for impact on the bottom and lid ends. The analyses were performed using the ANSYS model described in Appendix 2.13.1. The C.G. over corner drop occurs at a drop angle of approximately 74°. That is, the longitudinal axis of the containment vessel is at an angle of 74° from the impact surface. The dynamic analysis in Appendix 2.13.12 calculated the baseline g load of 61.7 g for the cask 30 ft CG over corner drop case. As described in Appendix 2.13.1, Section 2.13.1.2.4, a conservative g load of 75 g is used for cask structural evaluations.

Tables 2.13.1-49 through 2.13.1-52 of Appendix 2.13.1 list the combined stress intensities for the CG over corner drop on bottom end drop and CG over corner drop on lid end load combinations. Based on the results shown in these tables, all the stresses are below the Code allowables.

2.7.1.4 Oblique Drop

The oblique drop (slap down) for the containment vessel at a drop angles of 5° and 10° were evaluated in Appendix 2.13.12. The oblique drop (slap down) cases at drop angles of 5° and 10° were evaluated in Appendix 2.13.12. The maximum g load of 130 occurs at 10° second impact. For the oblique drop (slap down) case, the maximum g load occurs either at the top end (slap down second impact at top end) or the bottom end (slap down second impact at bottom end). The maximum g load linearly decreases from the impact end along the length of the cask. For cask body structural evaluation, the top and bottom ends of the cask are analyzed for 130 g acceleration perpendicular to impact to bound the acceleration of the cask during slap down event. The acceleration in the middle portion of the cask is smaller than the side drop case. Therefore, the middle portion of the cask is bounded by the 75 g side drop evaluation.

Table 2.13.1-53 of Appendix 2.13.1 lists the combined stress intensities for the 130 g side drop. Based on the results shown in these tables, all the stresses are below the Code allowables.

2.7.1.5 Summary of Results

Based on the stress results listed in the Appendix 2.13.1, all the stresses are within the Code allowables.

Stress results summarized in Table 2.13.1-41 through Table 2.13.1-55 are based on elastic analysis methodology and evaluated in accordance with the ASME Code, Appendix F [3] Elastic Analysis criteria (Paragraph F-1331.1) and when necessary, Plastic Analysis criteria (Paragraph F-1341.2). Based on the results shown in these tables, cask component stresses for most of the load cases remain in the elastic range except for the for the side drop load cases. These tables show that all the calculated stresses in the containment boundary meet the ASME Code elastic analysis allowable stress limits.

The two side drop cases (side drop with 25 psig external pressure, Table 2.13.1-45, and side drop with 30 psig internal pressure, Table 2.13.1-47) which exceeded the elastic allowables were analyzed using plastic analysis methodology and the resulting stresses evaluated in accordance with the ASME Code, Appendix F [3] Plastic Analysis criteria (Paragraph F-1341.2).

The stresses resulting from the analyses of the two load cases above are compared with the Code allowable stress limits for plastic analysis and are summarized in Table 2.13.1-46 (for the side drop with 25 psig external pressure load case) and Table 2.13.1-48 (for the side drop with 30 psig internal pressure load case). For the two side drop cases, the stresses in the outer shell slightly exceed the Code elastic allowables. However, the outer shell is not a part of the cask containment boundary. Moreover, the outer shell has been shown to meet the ASME Code allowable stress limits for plastic analysis, as shown in Table 2.13.1-46 and Table 2.13.1-48.

2.7.1.6 Lid and Bottom Plug Bolts

The lid bolts are analyzed for the following loadings: operating preload, gasket seating load, internal pressure, temperature changes, impact loads, and puncture loads. The analysis is based on NUREG/CR 6007 [16].

The bolt preload is calculated to withstand the worst case load combination and to maintain a clamping (compressive) force on the closure joint. Based upon the load combination results (see

Appendix 2.13.2), it is shown that a positive (compressive) load is maintained on the clamped joint for all load combinations, except for the accident condition impact plus pressure load, which was evaluated in Appendix 2.13.7. A finite element analysis of the seal area was performed in Appendix 2.13.7, and it was concluded that there is no detrimental decompression of the seal during the accident condition impact plus pressure loading condition.

A summary of the calculated stresses is listed in the Table 2.13.2-7 of Appendix 2.13.2.

The bottom plug bolts are also evaluated (Appendix 2.13.2, Section 2.13.2.9) using the same methodology as described above. The results show the bolt loads are bounded by the preload and that the bolt stresses remain below allowables

2.7.1.7 Impact Limiter Attachments

The impact limiters must remain attached to the cask body before, during, and after each HAC drop. The limiting loading condition for the impact limiter attachments is the secondary impact (slap down) associated with the 10° slap down 30 ft drop. This loading condition applies the greatest separating moment between the impact limiter and cask body interface. Although this loading condition is not limiting with respect to any other cask component, an evaluation of the attachments is performed to demonstrate that the affected impact limiter remains in place to insulate the cask during the subsequent hypothetical thermal accident.

The analysis and results are provided in detail in Section 2.13.12.6 of Appendix 2.13.12.

The analysis concludes that the impact limiter attachment design is sufficiently strong to ensure that the impact limiters remain attached to the cask body during and following all HAC loads.

2.7.1.8 Cask Lead Slump and Containment Buckling Analyses

In the event of a drop of the TN-LC transport package, permanent deformation of the lead gamma shield may result for certain impact orientations. An analysis is performed to evaluate the inner cylindrical shell stability and lead slump when subject to the end drop impact loads.

A non-linear finite element analysis is performed in order to evaluate the buckling capacity of the inner shell of the TN-LC cask. An ANSYS [7] finite element model is constructed for this purpose. The results of the finite element analysis provide both stresses and displacements generated during the end drop event. The allowable buckling load is 300 g, and the maximum lead slump is 1.13 in the direction of the cask length based on accident acceleration of 95 g. The detailed analysis is provided in Appendix 2.13.3.

2.7.2 Crush

This test does not apply to the TN-LC transport package since the package weight is in excess of 5,000 kg (11,000 lb).

2.7.3 Puncture

An evaluation of the puncture drop as specified by 10CFR71.73(c)(3) is presented below. This is considered to be the worst case scenario of the package dropped from a distance of 40 in. onto a vertical puncture bar. The specified puncture bar is a 6 in. diameter solid, vertical, cylindrical,

mild steel bar. The impact limiters will protect the ends of the cask body during this event. Consequently, the most severe damage to the cask body, resulting from the puncture drop, will occur on the outer cylindrical shell midway between the impact limiters. For this load condition, it is conservatively assumed that the cask outer shell surface impacts the puncture bar directly.

Required Thickness

The required thickness t_{req} to preclude puncture is calculated using the Nelms equation for lead backed shells [4], which is given by:

$$t_{req} = \left[\frac{W}{S_u}\right]^{0.71}$$

Where W is the weight of the package (conservatively taken equal to 52,000 lb), and the material property of S_u is conservatively taken at as SA-240, Type XM-19 at 300°F:

$$t_{req} = \left[\frac{52{,}000}{94{,}200}\right]^{0.71} = 0.656\,\text{in.}$$

The thickness of the outer shell is 1.5 in., and the thickness of the neutron shield shell is equal to 0.25 in., which is greater than the required thickness computed above. Therefore, the outer shell will preclude penetration of the bar during the postulated puncture event.

2.7.4 Thermal

2.7.4.1 Summary of Pressures and Temperatures

The analysis of the thermal accident is presented in Chapter 3. The maximum internal pressure during the thermal accident is calculated in Section 3.1.4. The calculated pressure is 90.9 psig. However, the structural analysis is performed conservatively assuming a 120 psig internal pressure for the accident pressure stress calculations.

An ANSYS transient thermal analysis of the cask for the 30 minute thermal accident is reported in Chapter 3. The initial condition is steady state at an ambient temperature of 100°F and maximum decay heat. The initial steady state condition is followed by a 0.5 hour severe thermal transient which is then followed by a cool down period. The temperatures from the thermal analysis are reported in Chapter 3.

The temperature through the cross-section of the cask, at the time of the maximum thermal gradient, is used for input to the cask model for thermal stress analysis.

2.7.4.2 Differential Thermal Expansion

The cask basket temperature does not change appreciably while the cask body temperature rises during the fire accident. The gap between the outside diameter of the basket and the inside diameter of the cask and basket/cask cavity length will increase slightly based on thermal expansion evaluation results from NCT thermal loading conditions; therefore, there is adequate clearance between the various components of the basket and cask body to allow free thermal expansion.

2.7.4.3 Stress Calculations

The load combination performed to evaluate the fire accident event is indicated in Table 2-9. Table 2.13.1-55 of Appendix 2.13.1 lists the combined stress intensities for the fire accident condition.

2.7.4.4 Comparison with Allowable Stresses

Table 2.13.1-55 provides a comparison of the calculated stress with the specified allowable stresses. All stresses are below allowables.

2.7.5 Immersion–Fissile Material

The criticality evaluation presented in Chapter 6 considers the effect of water in-leakage. Thus, the requirements of 10CFR71.73(c)(5) are met. The cask body stresses for this immersion condition (1.3 psi external pressure) are bounded by the immersion condition for all packages (water pressure of 290 psi) described in Section 2.7.7 below.

2.7.6 Immersion–All Packages

The immersion loading condition results in an external pressure applied to the cask body corresponding to a 50 ft head of water (21.7 psig). Assuming a 0 psia cask cavity pressure, the resulting maximum external pressure loading is 36.4 psi (21.7 + 14.7). The cask body stresses for this immersion condition (36.4 psi external pressure) are enveloped by the deep water immersion condition (water pressure of 290 psi) described in Section 2.7.7 below.

2.7.7 Deep Water Immersion Test

10CFR71.61 requires that the package be subjected to an external water pressure of 290 psig for a period of not less than one hour without collapse, buckling, or in-leakage of water. The load combination performed to evaluate this event is included in Table 2-9.

Table 2.13.1-54 of Appendix 2.13.1 lists the combined stress intensities for this accident event.

2.7.8 Summary of Damage

2.7.8.1 Summary of Accident Condition Cask Body Structural Analysis

The following table lists the highest stress ratio in the cask components and also identifies the load combination tables from Appendix 2.13.1 where these stresses are shown. Also listed in the tables are the stress limits based on the Section 2.1.2 structural design criteria.

Comparison of the Maximum Stress Intensities with the Allowables
(Elastic-Plastic Analysis)

Component	Maximum Stress Intensity (ksi)	Allowable Stress Intensity (ksi)	Stress Ratio	Stress Result Table
Outer Shell	63.6	$P_m = 64.9$	98.0%	2.13.1-53
Inner Shell	50.1	$P_m = 64.9$	77.2%	2.13.1-48
Lid	42.9	$P_m = 45.6$	94.1%	2.13.1-53
Top Flange	63.2	$P_m = 64.9$	97.4%	2.13.1-53
Bottom Flange	87.7	P_l and $P_l+P_b = 92.7$	94.7%	2.13.1-53
Bottom Plug	10.7	P_l and $P_l+P_b = 65.1$	16.4%	2.13.1-53

From the analysis results presented in the above table, it can be shown that the accident loads will not result in any structural damage to the cask.

2.7.8.2 Basket Stress Analysis

The structural adequacy of the basket structures in the TN-LC cask under HAC free end and side drop load cases are performed in Appendix 2.13.8. Based on the results of analyses shown in Appendix 2.13.8, all the basket designs meet the ASME Code Subsection NG and Appendix F requirements [3]. The basket is structurally adequate and will properly support and position the fuel under accident loading conditions.

2.8 Accident Conditions for Air Transport of Plutonium

This section does not apply to the TN-LC transport package because the package will not be transported by air.

2.9 Accident Conditions for Fissile Material Packages for Air Transport

This section does not apply to the TN-LC transport package because the package will not be transported by air.

2.10 Special Form

This section does not apply to the TN-LC transport package because the payloads are not considered to be special form.

2.11 Fuel Rods

As discussed in Chapter 4, containment of the radioactive material is provided by the cask containment boundary. Analyses of the cask boundary for 10CFR71 NCT and HAC requirements demonstrate that the cask remains leak tight.

The structural adequacy of the fuel rods in the various baskets is not relied upon to provide containment of radioactive material under hypothetical accident conditions.

2.12 References

1. 10CFR PART 71, Packaging and Transportation of Radioactive Material.

2. American National Standards Institute, ANSI N14.6, American National Standard for Special Lifting Devices for Shipping Containers Weighing 10,000 Pounds or More for Nuclear Materials, 1993.

3. American Society of Mechanical Engineers, ASME Boiler and Pressure Vessel Code, Section III, and Appendices, 2004 including 2006 addenda.

4. American Society of Mechanical Engineers, ASME Boiler and Pressure Vessel Code, Section III, Division 3, Subsection WB, 2004 including 2006 addenda.

5. USNRC, "Design Criteria for the Structural Analysis of Shipping Cask Containment Vessels," Regulatory Guide 7.6, Revision 1, March 1978.

6. USNRC, "Load Combinations for the Structural Analysis of Shipping Casks for Radioactive Material," Regulatory Guide 7.8, Revision 1, March 1989.

7. ANSYS Computer Code and User's Manual, Release 10.0A1.

8. American Society of Mechanical Engineers, ASME Boiler and Pressure Vessel Code, Section V, 2004 including 2006 addenda.

9. American Society of Mechanical Engineers, ASME Boiler and Pressure Vessel Code, Section II, Part C and Part D, 2004 including 2006 addenda.

10. American Society of Mechanical Engineers, ASME Boiler and Pressure Vessel Code, Section IX, 2004 including 2006 addenda.

11. Not Used.

12. Not Used.

13. WRC Bulletin 107, March 1979 Revision, "Local Stresses in Spherical and Cylindrical Shells Due to External Loadings."

14. ANSI N14.23, "Draft American National Standard Design Basis for Resistance to Shock and Vibration of Radioactive Material Packages Greater Than One Ton in Truck Transport," May, 1980.

15. USNRC, "Shock and Vibration Environments for Large Shipping Containers on Rail Cars and Trucks," NUREG 766510, June, 1977.

16. USNRC, "Stress Analysis of Closure Bolts for Shipping Casks," NUREG/CR-6007 Lawrence Livermore National Laboratory, 1992.

17. Tietz, T. E., "Determination of the Mechanical Properties of a High Purity Lead and a 0.058 % Copper-Lead Alloy," WADC Technical Report 57-695, ASTIA Document No. 151165, Stanford Research Institute, Menlo Park, CA, April 1958.

18. H.J. Rack, G.A. Knorovsky, "An Assessment of Stress-Strain Data Suitable for Finite-Element Elastic-Plastic Analysis of Shipping Containers," Sandia Laboratories, NUREG/CR-0481, SAND77-1872 R-7, 1978.

19. R.A. Robinson, et. al., "A Survey of Strain-Rate Effects for Some Common Structural Materials Used in Radioactive Material Packaging and Transportation Systems," Report BMI-1954, August 1976, Battelle Columbus Laboratories.

20. 10CFR PART 20, Standards for Protection Against Radiation.

21. Parker O-Ring Handbook, ORD5700, 2007, Parker Hannifin Corp.

2.13 Appendices

The detailed structural analyses of the TN-LC transport package are included in the following appendices:

2.13.1 TN-LC Cask Body Structural Evaluation

2.13.2 TN-LC Cask Lid and Bottom Plug Closure Bolt Analyses

2.13.3 TN-LC Cask Lead Slump and Containment Boundary Buckling Analysis

2.13.4 TN-LC Structural Analysis of the Neutron Shield Shell

2.13.5 TN-LC Cask Lifting and Tie-Down Devices Structural Evaluation

2.13.6 TN-LC Cask Containment Boundary Fatigue Evaluation

2.13.7 TN-LC Lid Closure Evaluation Due to Delayed Impact

2.13.8 TN-LC Basket Structural Evaluation

2.13.9 TN-LC Basket Dynamic Load Factor Determination

2.13.10 TN-LC Transport Package Thermal Expansion Evaluation

2.13.11 TN-LC Fuel Assemblies and Fuel Elements under Impact Loads

2.13.12 TN-LC Transport Package Impact Limiter Analysis using LS-DYNA

2.13.13 TN-LC Transport Cask and Basket ASME Code Alternatives

Table 2-1
Containment Vessel Stress Limits

CLASSIFICATION	STRESS INTENSITY LIMIT
Normal (Level A) Conditions [(1)]	
P_m	S_m
P_l	$1.5\ S_m$
$(P_m \text{ or } P_l) + P_b$	$1.5\ S_m$
Shear Stress	$0.6\ S_m$
Bearing Stress	S_y
$(P_m \text{ or } P_l) + P_b + Q$	$3\ S_m$
$(P_m \text{ or } P_l) + P_b + Q + F$	S_a
Hypothetical Accident (Level D) [(2), (3)]	
P_m	Smaller of $2.4\ S_m$ or $0.7\ S_u$
P_l	Smaller of $3.6\ S_m$ or S_u
$(P_m \text{ or } P_l) + P_b$	Smaller of $3.6\ S_m$ or S_u
Shear Stress	$0.42\ S_u$

Notes:
1. Classification and stress limits are as defined in ASME Code, Section III, Subsection NB [3]. Limit analysis specified in Section NB-3228.1, Simplified elastic-plastic analysis specified in Section NB-3228.5.
2. Classification and stress limits are as defined in ASME Code, Section III, Appendix F [3].
3. When evaluating the results from the non-linear elastic-plastic analysis for the accident conditions, the general primary membrane stress intensity, P_m, shall not exceed greater of $0.7\ S_u$ or $S_y + 1/3\ (S_u - S_y)$, and the maximum primary stress intensity at any location (P_L or $P_L + P_b$) shall not exceed $0.9\ S_u$. These limits are in accordance with Appendix F of Section III of the Code.

Table 2-2
Containment Bolt Stress Limits

CLASSIFICATION [2]	STRESS INTENSITY LIMIT [1], [5], [6]
Normal (Level A) Conditions	
Average Tensile Stress	2/3 S_y
Maximum Combined Stress	0.9 S_y
Bearing Stress	S_y
Hypothetical Accident (Level D) [3]	
Average Tensile Stress	Smaller of S_y or 0.7 S_u
Average Shear Stress	Smaller of 0.42 S_u or 0.6 S_y
Maximum Combined Stress	S_u
Combined Shear & Tension	$R_t^2 + R_s^2 < 1$ [4]

Notes:
1. The stress analysis of the lid bolt is performed in accordance with NUREG/CR-6007 [16] described in Appendix 2.13.2. The stress limits for the lid bolt are listed separately in Table 2.13.2-3 and Table 2.13.2-4.
2. Classification and stress limits are as defined in ASME B&PV Code, Section III, Subsection NB [3].
3. Stress limits are in accordance with ASME B&PV Code, Section III, Appendix F [3].
4. R_t : Ratio of average tensile stress to allowable average tensile stress.
5. R_s : Ratio of average shear stress to allowable average shear stress.
6. All stresses include the effect of tensile and torsional loads due to bolt preloading.

Table 2-3
Cask Basket Stress Limits

CLASSIFICATION	STRESS INTENSITY LIMIT
Normal (Level A) Conditions [1]	
P_m	S_m
P_l	$1.5\ S_m$
$(P_m + P_l) + P_b$	$1.5\ S_m$
$(P_m + P_l) + P_b + Q$	$3\ S_m$
$(P_m + P_l) + P_b + Q + F$	S_a
Shear Stress	$0.6\ S_m$
Hypothetical Accident (Level D) [2], [3]	
P_m	Smaller of $2.4\ S_m$ or $0.7\ S_u$
P_l	Smaller of $3.6\ S_m$ or S_u
$(P_m + P_l) + P_b$	Smaller of $3.6\ S_m$ or S_u
Shear Stress	$0.42\ S_u$

Notes:

1. Classification and stress limits are as defined in ASME Code, Section III, Subsection NG [3]. Limit analysis specified in Section NG-3228.2, Simplified elastic-plastic analysis specified in Section NG-3228.3, and Shakedown analysis specified in NG-3228.1 also can be used for structural evaluation of the basket.
2. Classification and stress limits are as defined in ASME Code, Section III, Appendix F [3].
3. When evaluating the results from the non-linear elastic-plastic analysis for the accident conditions, the general primary membrane stress intensity, P_m, shall not exceed greater of $0.7\ S_u$ or $S_y + 1/3\ (S_u - S_y)$, and the maximum primary stress intensity at any location (P_L or $P_L + P_b$) shall not exceed $0.9\ S_u$. These limits are in accordance with Appendix F of Section III of the Code.

Table 2-4
Cask Material Properties

(Part 1 of 2)

Material	Class	Temp. (°F)	S_y (ksi)	S_u (ksi)	S_m (ksi)	E (10^6 psi)	$\alpha x10^{-6}$ (in./in./°F)
SA-540, Gr. B23, Cl 1 and Gr. B24, Cl 1 (Bolt)	Sect III Class 1	70	150.0	165.0	50.0	27.8	6.4
		200	144.0	165.0	47.8	27.1	6.7
		300	140.3	165.0	46.2	26.7	6.9
		400	137.9	165.0	44.8	26.2	7.1
		500	136.0	165.0	43.4	25.7	7.3
		600	133.4	165.0	41.4	25.1	7.4
		700	129.0	158.6	---	24.6	7.6
SA-240, Type 304	Sect III Class 1	70	30.0	75.0	20.0	28.3	8.5
		200	25.0	71.0	20.0	27.5	8.9
		300	22.4	66.2	20.0	27.0	9.2
		400	20.7	64.0	18.6	26.4	9.5
		500	19.4	63.4	17.5	25.9	9.7
		600	18.4	63.4	16.6	25.3	9.8
		700	17.6	63.4	15.8	24.8	10.0
SA-182, Grade F304 >5 in.	Sect III Class 1	70	30.0	70.0	20.0	28.3	8.5
		200	25.0	66.3	20.0	27.5	8.9
		300	22.4	61.8	20.0	27.0	9.2
		400	20.7	59.7	18.6	26.4	9.5
		500	19.4	59.2	17.5	25.9	9.7
		600	18.4	59.2	16.6	25.3	9.8
		700	17.6	59.2	15.8	24.8	10.0
SA-182, Grade F304 ≤5 in.	Sect III Class 1	70	30.0	75.0	20.0	28.3	8.5
		200	25.0	71.0	20.0	27.5	8.9
		300	22.4	66.2	20.0	27.0	9.2
		400	20.7	64.0	18.6	26.4	9.5
		500	19.4	63.4	17.5	25.9	9.7
		600	18.4	63.4	16.6	25.3	9.8
		700	17.6	63.4	15.8	24.8	10.0
SA-240, Type XM19	Sect III Class 1	70	55.0	100.0	33.3	28.3	8.2
		200	47.1	99.4	33.1	27.6	8.5
		300	43.3	94.2	31.4	27.0	8.8
		400	40.7	91.1	30.4	26.5	8.9
		500	38.8	89.1	29.7	25.8	9.1
		600	37.4	87.7	29.2	25.3	9.2
		700	36.3	86.4	28.8	24.8	9.3

Table 2-4
Cask Material Properties

(Part 2 of 2)

Material	Class	Temp. (°F)	S_y (ksi)	S_u (ksi)	S_m (ksi)	E (10^6) psi	$\alpha x10^{-6}$ (in./in./°F)
SA-182, Grade FXM19	Sect III Class 1	70	55.0	100.0	33.3	28.3	8.2
		200	47.1	99.4	33.1	27.6	8.5
		300	43.3	94.2	31.4	27.0	8.8
		400	40.7	91.1	30.4	26.5	8.9
		500	38.8	89.1	29.7	25.8	9.1
		600	37.4	87.7	29.2	25.3	9.2
		700	36.3	86.4	28.8	24.8	9.3

Table 2-5
Mechanical Lead Properties

Static Mechanical Lead Properties

Temp (°F)	Static Stress Properties (ksi) [17]			E [18] (10^6 psi)	Coef. of Thermal Exp [18] (10^{-6} in./in./°F)
	Yield (S_Y)		Ultimate (S_U)		
	Tension	Compression	Tension		
-99	-	-	-	2.50	15.28
70	-	-	-	2.34	16.07
100	0.584	0.490	1.570	2.30	16.21
175	0.509	0.428	1.162	2.20	16.58
250	0.498	0.391	0.844	2.09	16.95
325	0.311	0.320	0.642	1.96	17.54
440	-	-	-	1.74	18.50
620	-	-	-	1.36	20.39

Dynamic Stress-Strain Lead Properties

Strain (in./in.)	Stress (ksi) [19]				
	At 100°F	At 230°F	At 300°F	At 350°F	At 500°F
0.00048	1.14	1.06	1.00	0.97	0.86
0.03	2.2	2.0	1.7	1.5	1.1
0.1	3.3	2.8	2.38	2.1	1.26
0.3	4.9	3.2	2.72	2.4	1.44
0.5	5.6	3.6	3.06	2.7	1.62

Table 2-6
TN-LC Transport Package Performance Evaluation Overview (NCT)

Loading Condition	SAR Section	Scope of Evaluation
Heat 71.71(c)(1)	2.6.1.1	Summary of temperature and pressure
	2.6.1.2	Different thermal expansion
	2.6.1.3	Stress calculation
	2.6.1.4	Comparison with allowable stresses
Cold 71.71(c)(2)	2.6.2	Cask body stresses due to cold environment load combinations
Reduced External Pressure 71.71(c)(3)	2.6.3	Cask body stresses due to 30 psig internal pressure load combinations
Increase External Pressure 71.71(c)(4)	2.6.4	Cask body stresses due to 25 psig external pressure load combinations
Shock Loads 71.71(c)(5)	2.6.5	Cask body stresses due to rail/truck shock loads
		Cask body stresses due to rail/truck shock loads
Vibration Loads 71.71(c)(5)	2.6.5	Cask body stresses due to rail/truck vibration loads
		Cask body stresses due to rail/truck vibration loads
Water Spray 71.71(c)(6)	2.6.6	Negligible for TN-LC cask
Free Drop 71.71(c)(7)	2.6.7	Cask body stresses due to 1 ft bottom end drop
		Cask body stresses due to 1 ft lid end drop
		Cask body stresses due to 1 ft side drop
Corner Drop 71.71(c)(8)	2.6.8	Not applicable
Compression 71.71(c)(9)	2.6.9	Not applicable
Penetration 71.71(c)(10)	2.6.10	Not applicable
Fabrication Stress	2.6.11	Discuss the cask stresses during the lead pouring process and subsequent cool down
Lid Bolt Analysis	2.6.12	Bolt stresses due to preload, pressure loads, temperature, impact and puncture loads
Fatigue Analysis of Containment Vessel	2.6.13	Fatigue evaluation of containment vessel due to pressure, temperature, shock/vibration, and 1 ft drop loads
Summary of NCT Cask Analysis	2.6.14	Lists the highest stress intensity ratio in the containment vessel and gamma shield and compares results with the allowables
Basket Evaluation	2.6.15	Structural analysis of the basket due to 1 ft end drop and 1 ft side drop loads

Table 2-7
NCT Structural Analyses - List of Individual Loads

Load No	Individual Loads	Temperature	Inertia Load	Inertia Load	Inertia Load	Pressure Load
		[°F] (1)	Vertical	Lateral	Axial	[psig]
1	Bolt Preload (2)	350	0	0	0	0
2	Internal Pressure	350	0	0	0	30
3	External Pressure	350	0	0	0	25
4	Hot Environment (100°F Ambient Temp)	Distribution	0	0	0	0
5	Cold Environment (-40°F Ambient Temp)	Distribution	0	0	0	0
6	3 g Lifting	350	0	0	3 g	0
7A	Rail Car Shock Loads Scenario A	350	0	0	-4.7 g	0
7B	Rail Car Shock Loads Scenario B	350	0	0	4.7 g	0
7C	Rail Car Shock Loads Scenario C	350	4.7 g	0	0	0
7D	Rail Car Shock Loads Scenario D	350	-4.7 g	0	0	0
8A	Rail Car Vibration Loads Scenario A	350	0.42 g	0	-0.19 g	0
8B	Rail Car Vibration Loads Scenario B	350	0.42 g	0	0.19 g	0
8C	Truck Vibration Loads Scenario C	350	0.67 g	0	0.30 g	0
9	1 ft End Drop on Lid End	350	0	0	35 g	0
10	1 ft End Drop on Bottom End	350	0	0	45 g	0
11	1 ft Side Drop	350	30 g	0		0
12	1 g Gravity Loading	350	1 g	0	0	0

Notes:
1. Temperature 350°F is the upper bound temperature of structural components for thermal hot and thermal cold conditions.
2. Calculation used preload force 40.0 kip for Lid bolts and 8.55 kip for Bottom Plug bolts.

Table 2-8
Summary NCT Load Combinations

Load Case	Load Combination	Individual Loads Participating in Load Combination										
		1	2	3	4	5	7[1]	8[2]	9	10	11	12
13	Hot Environment	X	X		X							X
14	Cold Environment	X		X		X						X
15	Increased Ext. Pressure	X		X		X						X
16	Minimum Ext. Pressure	X	X		X							X
17	Rail Car Vibration	X	X		X			X				
18		X		X		X		X				
19	Rail Car Shock	X	X		X		X					
20		X		X		X	X					
21	1 ft End Drop on Lid End	X	X		X				X			
22		X		X		X			X			
23	1 ft End Drop on Bottom End	X	X		X					X		
24		X		X		X				X		
25	1 ft Side Drop	X	X		X						X	
26		X		X		X					X	

Notes:
1. The envelope of rail car shock cases 7A, 7B, 7C, 7D.
2. The envelope of rail car vibration cases 8A, 8B, 8C.

Table 2-9
Summary of HAC Load Combinations

HAC–List of Load Cases					
Load Combination No.	**Load**	**Internal Pressure** (psig)	**External Pressure** (psig)	**Temp. Hot** (°F)	**Stress Result Table No.**
27	30 ft End Drop on Bottom End	30		X	Table 2.13.1-41
28			25	X	Table 2.13.1-42
29	30 ft End Drop on Lid End	30		X	Table 2.13.1-43
30			25	X	Table 2.13.1-44
31	30 ft Side Drop	30		X	Table 2.13.1-45 and 46
32			25	X	Table 2.13.1-47 and 48
33	30 ft CG Over Corner Drop on Bottom End	30		X	Table 2.13.1-49
34			25	X	Table 2.13.1-50
35	30 ft CG Over Corner Drop on Lid End	30		X	Table 2.13.1-51
36			25	X	Table 2.13.1-52
37	30 ft Slap-Down Drop on Bottom End[1]	30		X	Table 2.13.1-53
41	Immersion + Weight		290	X	Table 2.13.1-54
42	Fire Accident + Weight	120		620	Table 2.13.1-55

Notes:
1. For the slap down case, two drop angles were analyzed (5° and 10°).

Appendix 2.13.1
TN-LC Cask Body Structural Analysis

TABLE OF CONTENTS

2.13.1.1 Introduction 2.13.1-1
2.13.1.2 Description of the TN-LC Cask 2.13.1-2
2.13.1.2.1 Dimensions 2.13.1-2
2.13.1.2.2 ANSYS Models–Description 2.13.1-2
2.13.1.2.3 Payload and Cask Component Weight Data Used in the Analysis 2.13.1-4
2.13.1.2.4 Baseline g Loads Used for the Drop Analysis 2.13.1-4
2.13.1.2.5 Method of Load Application to the Cask Body 2.13.1-4
2.13.1.3 Boundary Conditions 2.13.1-11
2.13.1.4 Load Cases and Load Combinations 2.13.1-12
2.13.1.4.1 Normal Conditions of Transport Cases 2.13.1-12
2.13.1.4.2 Hypothetical Accident Conditions Cases 2.13.1-15
2.13.1.5 NCT Loads Structural Evaluations 2.13.1-16
2.13.1.5.1 Basket Payload Weight 2.13.1-16
2.13.1.5.2 Application of Impact Limiter Weight to the Cask Body 2.13.1-16
2.13.1.5.3 Application of Reaction Forces from Impact Load to the Cask Body 2.13.1-17
2.13.1.6 HAC Loads Structural Evaluations 2.13.1-19
2.13.1.6.1 Application of Payload to the Cask Body 2.13.1-19
2.13.1.6.2 Application of Impact Limiter Weight to the Cask Body 2.13.1-19
2.13.1.6.3 Application of Reaction Forces from Impact Load to the Cask Body 2.13.1-20
2.13.1.7 NCT Stress Evaluation 2.13.1-23
2.13.1.7.1 Stress Criteria 2.13.1-23
2.13.1.7.2 Load Combinations and Reporting of Stress Results 2.13.1-23
2.13.1.7.3 Summary of the NCT Stress Results 2.13.1-24
2.13.1.8 HAC Stress Evaluation 2.13.1-26
2.13.1.8.1 Stress Criteria 2.13.1-26
2.13.1.8.2 Load Combination and Reporting of Stress Results 2.13.1-27
2.13.1.8.3 Elastic/Plastic Analysis of TN-LC Cask Body Due to HAC Loads 2.13.1-27
2.13.1.8.4 Method of Interpretation/Obtaining the Stress Results From ANSYS Model 2.13.1-28
2.13.1.9 Stress Classification Paths 2.13.1-29
2.13.1.10 Stress Linearization Method 2.13.1-30
2.13.1.10.1 Summary of TN-LC Cask Body Structural Evaluations 2.13.1-30
2.13.1.11 References 2.13.1-31

LIST OF TABLES

Table 2.13.1-1 TN-LC Cask Components (3D Finite Element Model) 2.13.1-32
Table 2.13.1-2 Stress Results - Load Case 1 - Bolt Preload 2.13.1-33
Table 2.13.1-3 Stress Results - Load Case 2 - Internal Pressure 30 psig 2.13.1-34
Table 2.13.1-4 Stress Results - Load Case 3 - External Pressure 25 psig 2.13.1-35
Table 2.13.1-5 Stress Results - Load Case 4 - Hot Environment 100°F 2.13.1-36
Table 2.13.1-6 Stress Results - Load Case 5 - Cold Environment -40°F 2.13.1-37
Table 2.13.1-7 Stress Results - Load Case 6 - 3 g Lifting 2.13.1-38
Table 2.13.1-8 Stress Results - Load Case 7A - Rail Car Shock Loads - Scenario A 2.13.1-39
Table 2.13.1-9 Stress Results - Load Case 7B - Rail Car Shock Loads - Scenario B 2.13.1-40
Table 2.13.1-10 Stress Results - Load Case 7C - Rail Car Shock Loads - Scenario C 2.13.1-41
Table 2.13.1-11 Stress Results - Load Case 7D - Rail Car Shock Loads - Scenario D 2.13.1-42
Table 2.13.1-12 Stress Results - Load Case 8A - Rail Car Vibration Loads - Scenario A 2.13.1-43
Table 2.13.1-13 Stress Results - Load Case 8B - Rail Car Vibration Loads - Scenario B 2.13.1-44
Table 2.13.1-14 Stress Results - Load Case 8C - Truck Vibration Loads 2.13.1-45
Table 2.13.1-15 Stress Results - Load Case 9 – One-Foot Vertical Drop on Lid End 2.13.1-46
Table 2.13.1-16 Stress Results - Load Case 10 - One-Foot Vertical Drop on Bottom End 2.13.1-47
Table 2.13.1-17 Stress Results - Load Case 11 - One-Foot Side Drop 2.13.1-48
Table 2.13.1-18 Stress Results - Load Case 12 - 1g Gravity 2.13.1-49
Table 2.13.1-19 NCT Rear Impact Limiter-Reaction Forces 2.13.1-50
Table 2.13.1-20 NCT Front Impact Limiter-Reaction Forces 2.13.1-51
Table 2.13.1-21 HAC Rear Impact Limiter– Reaction Forces 2.13.1-52
Table 2.13.1-22 HAC Front Impact Limiter– Reaction Forces 2.13.1-53
Table 2.13.1-23 Stress Results - Load Combination 13 (Loads 1+2+4+12) 2.13.1-54
Table 2.13.1-24 Stress Results - Load Combination 14 (Loads 1+3+5+12) 2.13.1-55
Table 2.13.1-25 Stress Results - Load Combination 15 (Loads 1+3+5+12) 2.13.1-56
Table 2.13.1-26 Stress Results - Load Combination 16 (Loads 1+2+4+12) 2.13.1-57
Table 2.13.1-27 Stress Results - Load Combination 17 (Loads 1+2+4+8) 2.13.1-58
Table 2.13.1-28 Stress Results - Load Combination 18 (Loads 1+3+5+8) 2.13.1-59
Table 2.13.1-29 Stress Results - Load Combination 19 (Loads 1+2+4+7) 2.13.1-60
Table 2.13.1-30 Stress Results - Load Combination 20 (Loads 1+3+5+7) 2.13.1-61
Table 2.13.1-31 Stress Results - Load Combination 21 (Loads 1+2+4+9) 2.13.1-62
Table 2.13.1-32 Stress Results - Load Combination 22 (Loads 1+3+5+9) 2.13.1-63
Table 2.13.1-33 Stress Results - Load Combination 23 (Loads 1+2+4+10) 2.13.1-64
Table 2.13.1-34 Stress Results - Load Combination 24 (Loads 1+3+5+10) 2.13.1-65
Table 2.13.1-35 Stress Results - Load Combination 25 (Loads 1+2+4+11) 2.13.1-66
Table 2.13.1-36 Stress Results - Load Combination 26 (Loads 1+3+5+11) 2.13.1-67
Table 2.13.1-37 NCT Pressure Loads Specifications (Bottom End Impacts) 2.13.1-68
Table 2.13.1-38 NCT Pressure Loads Specifications (Lid End Impacts) 2.13.1-69
Table 2.13.1-39 HAC Pressure Loads Specifications (Bottom End Impacts) 2.13.1-70
Table 2.13.1-40 HAC Pressure Loads Specifications (Lid End Impacts) 2.13.1-71
Table 2.13.1-41 HAC Stress Results-Load Combination 27 ..... 2.13.1-72
Table 2.13.1-42 HAC Stress Results-Load Combination 28 ..... 2.13.1-73
Table 2.13.1-43 HAC Stress Results-Load Combination 29 ..... 2.13.1-74
Table 2.13.1-44 HAC Stress Results-Load Combination 30 ..... 2.13.1-75
Table 2.13.1-45 HAC Stress Results-Load Combination 31(Elastic Analysis) 2.13.1-76
Table 2.13.1-46 HAC Stress Results-Load Combination 31(Plastic Analysis) 2.13.1-77
Table 2.13.1-47 HAC Stress Results-Load Combination 32 (Elastic Analysis) 2.13.1-78
Table 2.13.1-48 HAC Stress Results-Load Combination 32 (Plastic Analysis) 2.13.1-79

Table 2.13.1-49 HAC Stress Results-Load Combination 33 ..... 2.13.1-80
Table 2.13.1-50 HAC Stress Results-Load Combination 34 ..... 2.13.1-81
Table 2.13.1-51 HAC Stress Results-Load Combination 35 ..... 2.13.1-82
Table 2.13.1-52 HAC Stress Results-Load Combination 36 ..... 2.13.1-83
Table 2.13.1-53 HAC Stress Results-Load Combination 37 ..... 2.13.1-84
Table 2.13.1-54 HAC Stress Results-Load Combination 41 ..... 2.13.1-85
Table 2.13.1-55 HAC Stress Results-Load Combination 42 ..... 2.13.1-86

LIST OF FIGURES

Figure 2.13.1-1 Schematic of the TN-LC Cask - FEA Model-Top Assembly 2.13.1-87
Figure 2.13.1-2 Schematic of the TN-LC Cask - FEA Model-Bottom Assembly 2.13.1-88
Figure 2.13.1-3 TN-LC Cask 3D Model – Overall View 2.13.1-89
Figure 2.13.1-4 TN-LC Cask 3D Model-Mesh 2.13.1-90
Figure 2.13.1-5 TN-LC Cask 3D Model – Mesh – Top and Bottom Part 2.13.1-91
Figure 2.13.1-6 TN-LC Cask 3D Model with Saddles and Straps 2.13.1-92
Figure 2.13.1-7 TN-LC Cask 3D Model with Saddles and Straps (Mesh) 2.13.1-93
Figure 2.13.1-8 TN-LC Cask 3D Model with Saddles and Straps (Model & Mesh) 2.13.1-94
Figure 2.13.1-9 TN-LC Cask 3D Model – Gamma Shield Contact Interface 2.13.1-95
Figure 2.13.1-10 TN-LC Cask 3D Model – Gamma Shield (Top) Contact Interface 2.13.1-96
Figure 2.13.1-11 TN-LC Cask 3D Model – Gamma Shield (Bottom) Contact Interface 2.13.1-96
Figure 2.13.1-12 TN-LC Cask 3D Model – Lid Contact Interface 2.13.1-97
Figure 2.13.1-13 TN-LC Cask 3D Model – Bottom Plug Contact Interface 2.13.1-98
Figure 2.13.1-14 TN-LC Cask 3D Model – Bushing Contact Interface 2.13.1-99
Figure 2.13.1-15 TN-LC Cask 3D Model – Couplings (Welds) between Lid and Gamma Shielding Cap (Top) 2.13.1-100
Figure 2.13.1-16 TN-LC Cask 3D Model – Couplings (Welds) for Bottom Flange and Bottom Plug 2.13.1-100
Figure 2.13.1-17 TN-LC Cask 3D Model Symmetry Boundary Conditions 2.13.1-101
Figure 2.13.1-18 TN-LC Cask Spatial Stabilization in x-z Plane for CG Over Corner Drop on Lid End Cases 2.13.1-102
Figure 2.13.1-19 TN-LC Cask Spatial Stabilization in x-z Plane for CG Over Corner Drop on Bottom End Cases and Side Drop Cases 2.13.1-103
Figure 2.13.1-20 TN-LC Cask End Drop on Lid End Loading 2.13.1-104
Figure 2.13.1-21 TN-LC Cask End Drop on Bottom End Loading 2.13.1-105
Figure 2.13.1-22 TN-LC Cask Side Drop Loading 2.13.1-106
Figure 2.13.1-23 TN-LC Cask 30 ft CG Over Corner Drop on Lid End Loading 2.13.1-107
Figure 2.13.1-24 TN-LC Cask 30 ft CG Over Corner Drop on Bottom End Loading 2.13.1-108
Figure 2.13.1-25 TN-LC Cask External Pressure Loading 2.13.1-109
Figure 2.13.1-26 TN-LC Cask Internal Pressure Loading 2.13.1-110
Figure 2.13.1-27 TN-LC Cask Stress Classification Paths at Symmetry Plane for Cask Components 2.13.1-111

Appendix 2.13.1
TN-LC Cask Body Structural Analysis

NOTE: References in this Appendix are shown as [1], [2], etc. and refer to the reference list in Section 2.13.1.11.

2.13.1.1 Introduction

This appendix documents the structural evaluation of the TN-LC cask body structure for the loading conditions specified in 10CFR71.71 and 10CFR71.73 [1], and the load combinations outlined in Regulatory Guide 7.8 [2]. Maximum stresses for the various load combinations are evaluated against the design criteria of the ASME Code [3]. The structural evaluation is performed in accordance with the guidance provided in the Standard Review Plan for Transportation Packages for Spent Nuclear Fuel, NUREG-1617 [4].

The specific methods, models and assumptions used to analyze the response of the cask body structure to the various individual loading conditions are described in the following sections. The stresses and deformations due to the applied loads are determined using the ANSYS computer program [6].

Loading conditions for Normal Conditions of Transport (NCT) are specified in Section 2.13.1.4. Design criteria and stress results for NCT events are described in Section 2.13.1.7. Loading conditions for Hypothetical Accident Conditions (HAC) are also specified in Section 2.13.1.4. Design criteria and stress results for HAC events are described in Section 2.13.1.8.

The detailed evaluations of the lid bolts are presented in Appendix 2.13.2 and Appendix 2.13.7. Stress evaluations for the lifting and tie-down devices, including the stresses at the trunnion/cask body interface, are described in Appendix 2.13.5.

2.13.1.2 Description of the TN-LC Cask

2.13.1.2.1 Dimensions

The cask body structure is the primary containment boundary of the packaging. The shell, or cask body cylinder assembly, is an open-ended (at the top) cylindrical unit with an integral closed bottom end. This assembly consists of a concentric inner shell (SA-240, Type XM19) and an outer shell (SA-240, Type XM19) welded to massive flanges (SA-182 Grade FXM19) at the lid end and bottom end.

The annulus between the shells is filled with lead shielding (ASTM-B29). The lead is poured into the annulus in a molten state using a carefully controlled procedure. The lid is bolted to the cylindrical shell by twenty 1 in. diameter high strength bolts and sealed with two O-rings.

A detailed description of the containment vessel is provided in Chapter 1.

Appendix 1.4.1 of Chapter 1 contains reference drawings of the TN-LC cask which are the source of dimensions and other information used to develop analysis models.

2.13.1.2.2 ANSYS Models–Description

3D ANSYS finite element models were constructed to represent the TN-LC cask body in the analyses. All models were devised to analyze cask assembly structure for 180° symmetry loads and boundary conditions. The schematic of basic structural components of the cask, represented in all models, is presented in Figure 2.13.1-1 and Figure 2.13.1-2. Additional plots of the model are shown in Figure 2.13.1-3 through Figure 2.13.1-16.

The finite element model represents the TN-LC transport cask assembly by means of fifteen structural components: Outer Shell, Inner Shell, Bottom Plug, Bushing, Lead Cap Bottom, Lid, Top Flange, Bottom Flange, End Cap, Tube, Bottom Plug Assembly Gamma Shielding, Bottom Flange Gamma Shielding, Top Lid Gamma Shielding, Inner/Outer Shell Gamma Shielding and Gamma Shielding Cap.

The distinctive features of the finite element models are summarized in the table below. Element type, material type and density used for each component is presented in Table 2.13.1-1.

Basic Features of TN-LC Cask Finite Element Models

Model 1	Model 2	Model 3
Used in HAC Calculations	Used in NCT Calculations	Used in NCT Calculations
All HAC cases	Side drop cases End drop cases 3 g lifting case	Rail car shock cases Rail car vibration cases 1g gravity case
Basic structural components	Basic structural components	Added saddles, straps, impact limiter steel blocks, neutron shield shell components
Nonlinear spring model of bolts in tensile and shear directions	Nonlinear spring model of bolts in tensile and shear directions	Nonlinear spring model of bolts in tensile and shear directions
Linear model of stress-strain curve for steel components for elastic analysis and bilinear model for plastic analysis with 5% tangent modulus.	Linear model of stress-strain curve for steel components	Linear model of stress-strain curve for steel components
Multi-linear kinematic hardening model KINH for lead component	Bilinear kinematic hardening model BKIN for lead component, with 1% tangent modulus	Bilinear kinematic hardening model BKIN for lead component, with 1% tangent modulus

All models use ANSYS structural solid elements SOLID45 for modeling the cask structural components. Contact interfaces between all cask components are modeled by means of surface-to-surface contact elements CONTA173, TARGE170.

The gamma shielding is assumed to completely fill the gamma shield cavity such that deformations of the inner shell immediately load the lead. Therefore, there is no initial gap between steel and lead material surfaces. For remaining interfaces, the initial gaps result from the nominal dimensions of the components.

The separate model was developed to analyze transport configuration loadings. In the transport configuration, the cask is oriented horizontally and secured to the transport skid at the bearing block in the longitudinal direction with two saddles and tie down straps.

The transport load path from the saddles or straps of the transport skid to the Outer Shell component of the cask consists of a set of steel blocks (impact limiter attachment blocks), welded to the cask body. The model includes the basic components of neutron shield assembly: the neutron shield shell, and the neutron shield shell end caps, as well as a simplified representation of two saddles and straps. The interface between transport skid saddles and straps, and packaging is modeled by means of surface contact elements CONTA173.

Lid bolts, cap bolts, and their preload are not modeled. The bolt interaction between structural components in axial and shear directions is simulated by means of sets of nonlinear spring elements (COMBIN39).

Impact limiters and cask trunnions are not modeled. Impact limiter weights are applied as pressure loads during the analysis.

Finite element models are shown in Figure 2.13.1-3 through Figure 2.13.1-8.

2.13.1.2.3 Payload and Cask Component Weight Data Used in the Analysis

The payload of the TN-LC transport cask may consist of any of the basket and fuel combinations, as described in Chapter 2. The structural evaluations of the package use a bounding payload weight of 8,000 lb. This bounding weight envelopes the weight of the expected payloads for the TN-LC transport cask as specified in Chapter 2, Section 2.1.3.

The weight of each impact limiter is assumed to be 1,500 lb which bounds the impact limiter weight of 1,496 lb which was reported in Chapter 2, Section 2.1.3.

The non-containment structure located outside of cask shell (e.g. neutron shield assembly) is not included in the model but is deemed to contribute noticeably to the overall mass of the cask. Therefore, the mass of non-containment structure located outside of the cask is added in form of the surface mass load spread on the interface of the neutron shield assembly and cask body using special purpose surface elements SURF154. The model assumes a neutron shield assembly mass of 7,250 lb.

2.13.1.2.4 Baseline g Loads Used for the Drop Analysis

The baseline g loads used for the cask drop analyses are established in Appendix 2.13.12 and are listed in the following table:

Drop Scenario		g Loads Including -40 °F Effect (App. 2.13.12)	g Loads Used in Cask Body Stress Calculation
30 ft End Drop Firm		82.4 –A	95 g
30 ft Side Drop Firm		67.3 –P	75 g
30 ft Slap Down 5° Firm	**1st Impact**	90.1 –P	130 g
	2nd Impact	117.8 –P	130 g
30 ft Slap Down 10° Firm	**1st Impact**	86.8 –P	130 g
	2nd Impact	130.3 –P	130 g
30 ft CG Over Corner Firm		61.7 –A	75 g
		14.9 –P	
1 ft End Drop Firm		34.7 –A	35 g for Lid End, 45 g for Bottom End
1 ft Side Drop Firm		19.2 –P	30 g

Notes:
A – Acceleration in the axial direction
P – Acceleration in the perpendicular direction

2.13.1.2.5 Method of Load Application to the Cask Body

2.13.1.2.5.1 Axial Pressure Loads due to Payload or Impact Limiter Weight

Axial loads that simulate the effect of the weight of the payload or the weight of the impact limiter are applied as a uniform pressure load and are calculated as applicable weight divided by load area. For example, to calculate the pressure caused by payload weight on the inner surface of the lid due to a 95 g end drop on the lid end, divide the total applied load P_I by the cross-sectional area A of the lid contact area.

$p_i = P_I / A$

$p_i = W_i \times G_{axial} / ([(\pi/4 (d^2)]$

$p_i = 8000 \times 95 / [(\pi/4) (17.94^2)]$

$p_i = 3006.6$ psi

Contact areas and pressure loads are calculated by ANSYS and based on actual input load and cask geometry.

2.13.1.2.5.2 Cosine Distributed Pressure Functions

Pressures applied in the radial directions were specified as the cosine distributed pressure functions with maximum pressure P_{max} at the bottom part of the load. These pressure distributions simulate distributed forces due to the basket and payload weight on the interface between the payload contents and the Inner Shell.

For the cask shell wall, or the distributed reaction forces on the interface between the impact limiters and the outer surface of the cask, the pressure distribution is assumed to be a linear function or a step function along the axial direction of the contact area and cosine function along the circumference of the cask.

Two separate pressure distribution functions were utilized to model pressure distribution in circumferential direction. The first function was a cosine pressure function and was used for non-impact loads only.

The second type of pressure function was applied to simulate impact loads. This type of distribution is based on the combination of cosine and hyperbolic functions. The formulas used for these two types of pressure distributions are defined below.

2.13.1.2.5.3 Cosine Distributed Pressure Loading

The circumferential cosine distribution of pressure over a pressure load half angle, θ_{max}, is calculated as follows:

$P_i = P_{max} \cos(\pi\theta_i / 2\theta_{max})$

where:

P_i = Pressure load at angle θ_i.

P_{max} = Peak pressure load, at the base of the interface (θ_i=0).

θ_i = Circumferential angle corresponding to location of interest.

The circumferential distribution of the pressure is illustrated in the following sketch:

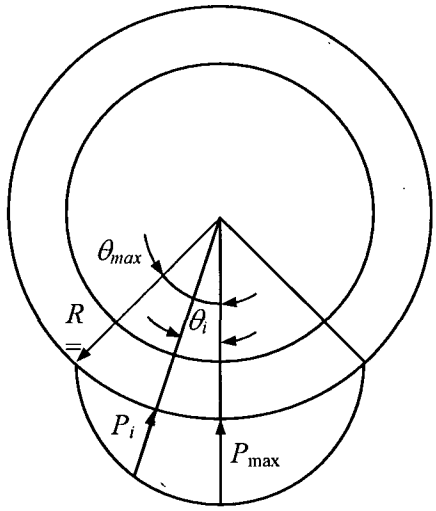

The peak pressure load, P_{max}, can be determined by setting the integral of the vertical pressure components, Q_i, equal to the net force in the transverse direction, F_t, defined as follows:

F_t= (Transverse Component of g-load) x (Imposed Weight Load) = $G_t \times W$

Thus,

$$G_t \times W = F_t = \int_{-\theta_{max}}^{\theta_{max}} Q_i LR d\theta_i = \int_{-\theta_{max}}^{\theta_{max}} P_i \cos(\theta_i) LR d\theta_i = \int_{-\theta_{max}}^{\theta_{max}} P_{max} \cos\left(\frac{\pi\theta_i}{2\theta_{max}}\right) \cos(\theta_i) LR d\theta_i$$

$$= \frac{P_{max} LR}{2} \int_{-\theta_{max}}^{\theta_{max}} \left[\cos\left(\frac{\pi\theta_i}{2\theta_{max}} + \theta_i\right) + \cos\left(\frac{\pi\theta_i}{2\theta_{max}} - \theta_i\right) \right] d\theta_i$$

$$= P_{max} LR \left[\frac{\sin\left(\frac{\pi}{2} + \theta_{max}\right)}{\left(\frac{\pi}{2\theta_{max}}\right) + 1} + \frac{\sin\left(\frac{\pi}{2} - \theta_{max}\right)}{\left(\frac{\pi}{2\theta_{max}}\right) - 1} \right]$$

In the above formulas:

θ_i = Position angle of circumferential distribution

$\pm\theta_{max}$ = Circumferential span of pressure load

F_t = Net force in the transverse direction

L = Axial span of pressure load

R = Radius of pressure load surface

G_t = Acceleration in the transverse direction of cask

W = Imposed weight load

Rearranging terms gives the peak pressure, P_{max}, as follows:

$$P_{max} = \frac{G_t \times W}{L \times R}\left[\frac{\sin\left(\frac{\pi}{2}+\theta_{max}\right)}{\left(\frac{\pi}{2\theta_{max}}\right)+1} + \frac{\sin\left(\frac{\pi}{2}-\theta_{max}\right)}{\left(\frac{\pi}{2\theta_{max}}\right)-1}\right]^{-1}$$

Therefore, the pressure at any circumferential location is given by:

$$p_i = \frac{G_t \times W}{L \times R}\left[\frac{\sin\left(\frac{\pi}{2}+\theta_{max}\right)}{\left(\frac{\pi}{2\theta_{max}}\right)+1} + \frac{\sin\left(\frac{\pi}{2}-\theta_{max}\right)}{\left(\frac{\pi}{2\theta_{max}}\right)-1}\right]^{-1} \cos\left(\frac{\pi\theta_i}{2\theta_{max}}\right)$$

For example, the internal pressure due to payload applied for the 75 g Side Drop case, distributed over a ±75° angle circumferentially, with an axial span of 182.25 in. and an inner shell radius of 8.97 in. can be calculated as follows:

$$p_i = \frac{75 \times 8000}{182.25 \times 8.97} \times \frac{1}{\frac{\sin(90+75)}{(\frac{180}{2\times 75})+1} + \frac{\sin(90-75)}{(\frac{180}{2\times 75})-1}} \times \cos(\frac{180 \times 0}{2 \times 75}) = 260.0\text{psi}$$

The pressure value calculated above corresponds to the peak pressure load, P_{max} (calculated at 0°). Magnitudes of peak pressure P_{max} for the various drop conditions are summarized in Table 2.13.1-37 and Table 2.13.1-39 (for the Bottom End impact) and Table 2.13.1-38 and Table 2.13.1-40 (for Top Lid End impact) and used in the ANSYS evaluations.

<u>Cosine × Hyperbolic Cosine Distributed Pressure Loading</u>

The circumferential cosine × cosh pressure distribution over an angle of 90° is calculated as follows:

$P_i = P_{max} \cos(\theta_i) \times \cosh(\theta_i)$

Where:

P_i = Pressure load at angle θ_i.

P_{max} = Peak reaction pressure load, at base point of impact.

θ_i = Position angle of circumferential distribution.

The circumferential distribution of pressure is illustrated in the following sketch:

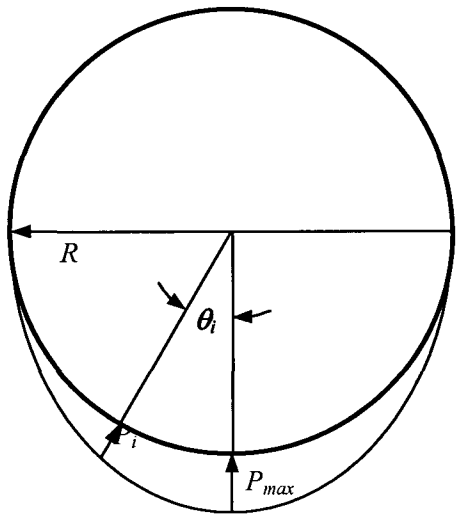

The peak pressure load, P_{max}, is determined by setting the integral of the vertical pressure components, Q_i, equal to the total transverse impact load, F_t, and is defined as follows:

F_t = (Transverse Component of g-load) × (Imposed Weight Load) = $G_t \times W$

Thus,

$$F_t = \int_{-\theta}^{\theta} Q_i LRd\theta_i = \int_{-\theta}^{\theta} P_i \cos(\theta_i) LRd\theta_i = \int_{-\theta}^{\theta} P_{max} \cos(\theta)\cosh(\theta) \times \cos(\theta) LRd\theta$$

integrating from $\pi/2$ to $-\pi/2$, then rearranging terms gives the peak pressure, P_{max}, as follows:

$$= P_{max} LR \int_{-\frac{\pi}{2}}^{\frac{\pi}{2}} \cos\text{^}2(\theta)\cosh(\theta)d\theta$$

$$= P_{max} LR \left[\frac{1}{2}\sinh(\theta) + \frac{1}{10}\left(\sinh(\theta)\cos(2\theta) + 2\cosh(\theta)\sin(2\theta)\right) \right] \Bigg|_{\frac{-\pi}{2}}^{\frac{\pi}{2}}$$

$$P_{max} = \frac{F_t}{L \times R}(0.543)$$

Therefore, the pressure at any circumferential location is given by:

$$P_i = \frac{G_t \times W \times 0.543}{L \times R} \cos(\theta_i) \times \cosh(\theta_i)$$

In the above formulas:

θ_i = Position angle of circumferential distribution

$\pm\theta_{max}$ = Circumferential span of pressure load

F_t = Net force in the transverse direction

L = Axial span of pressure load

R = Radius of pressure load surface

G_t = Acceleration in the transverse direction of cask

W = Imposed weight load

An example of a radial pressure calculation is provided below for the 30 ft CG over corner drop case on the lid end with a 74° impact angle.

The transverse g-load for 74° impact angle is 75g × cosine (74°) = 20.7g (see Table 2.13.1-22). The outer radius of the cask is 15.06 in. The total weight applied is W = (weight of cask) + (payload) + (weight of rear impact limiter) = 40691+8000+1500=50191 lb.

Therefore, for a total axial span of the front impact limiter is 11.5 in. and a uniform distribution of the load in the axial direction, the peak pressure at the cask–front impact limiter interface can be calculated as follows:

The peak pressure, $P_{max,}$ (at circumferential angle of 0°) is:

$$P_{max} = \frac{20.7 \times 50191 \times 0.543}{11.5 \times 15.06}$$

$$P_{max} = 3257.4 \text{ psi}$$

For the case of a step function form of the pressure load distribution in the axial direction with a load split ratio of 75/115, 68.2% of the load is distributed to the outer 7.5 in. section of the rear impact limiter, and 31.8% of the load W is distributed to the 11.5-7.5 = 4 in. inner section.

Thus, $R_{ER} = \frac{75}{115} \times G_t \times W = \frac{75}{115} \times 20.7 \times 50191 = 677578.5$ lb,

and $R_{IR} = \frac{40}{115} \text{ x } 20.7 \times 50191 = 361375.2$ lb.

With these modifications the peak pressures at outer and inner parts of rear impact limiter can be calculated as:

$$P_{max}(R_{ER}) = \frac{R_{ER} \times 0.543}{L \times R} = \frac{677578.5 \times 0.543}{7.5 \times 15.06} = 3257.4 \text{ psi}$$

$$P_{max}(R_{IR}) = \frac{R_{IR} \times 0.543}{L \times R} = \frac{361375.2 \times 0.543}{4.0 \times 15.06} = 3257.4 \text{ psi}$$

The peak reaction pressure values P_{max} for all corner drop/slap down cases are provided in Table 2.13.1-37 for Bottom End (Rear End) impact and Table 2.13.1-38 for Lid End (Front End) impact.

2.13.1.3 Boundary Conditions

The models were adapted to represent a 180° slice of the cask structure with symmetrical boundary conditions, and, in particular, to solve postulated drop accident conditions. Mesh and symmetry boundary conditions of the 3D model are presented in Figure 2.13.1-17.

In addition, spatial rigid body motion of the model in the x-z plane is prevented by fixing relevant displacements at two predefined points (nodes) at the symmetry plane. The location of the x-z plane stabilization points of the model is shown in Figure 2.13.1-18 and Figure 2.13.1-19.

2.13.1.4 Load Cases and Load Combinations

The load cases and load combinations used in the analysis are in accordance with Regulatory Guide 7.8 [2]. The analyzed load cases and load combinations represent the limiting mechanical and thermal loading conditions and serve as the structural design bases for the TN-LC packaging for transport conditions.

2.13.1.4.1 Normal Conditions of Transport Cases

The individual loads cases and associated loading conditions used for the NCT evaluations of the cask are presented in the table below.

NCT – Structural Analyses - List of Individual Loads

Load No	Individual Loads	Temperature	Inertia Load	Inertia Load	Inertia Load	Pressure Load
		[°F](1)	Vertical	Lateral	Axial	[psig]
1	Bolt Preload(2)	350	0	0	0	0
2	Internal Pressure	350	0	0	0	30
3	External Pressure	350	0	0	0	25
4	Hot Environment (100°F Ambient Temp)	Distribution	0	0	0	0
5	Cold Environment (-40°F Ambient Temp)	Distribution	0	0	0	0
6	3g Lifting	350	0	0	3 g	0
7A	Rail Car Shock Loads Scenario A	350	0	0	-4.7 g	0
7B	Rail Car Shock Loads Scenario B	350	0	0	4.7 g	0
7C	Rail Car Shock Loads Scenario C	350	4.7 g	0	0	0
7D	Rail Car Shock Loads Scenario D	350	-4.7 g	0	0	0
8A	Rail Car Vibration Loads Scenario A	350	0.42 g	0	-0.19 g	0
8B	Rail Car Vibration Loads Scenario B	350	0.42 g	0	0.19 g	0
8C	Truck Vibration Loads Scenario C	350	0.67 g	0	0.30 g	0
9	1 ft End Drop on Lid End	350	0	0	35 g	0
10	1 ft End Drop on Bottom End	350	0	0	45 g	0
11	1 ft Side Drop	350	30 g	0		0
12	1g Gravity Loading	350	1 g	0	0	0

Notes:
1. Temperature 350°F is the upper bound temperature of structural components for thermal hot and thermal cold conditions.
2. Preload force 40.0 kip for Lid bolts and 8.55 kip for Bottom Plug bolts is used for evaluation.

The above table identifies the individual load cases analyzed using the ANSYS models that serve as input constituents to the final load combinations. Inertia load definition pertains to the horizontal transport configuration of packaging. Stress results for all the individual load cases identified in the table above are documented in Table 2.13.1-2 through Table 2.13.1-18.

Loads 7A, 7B, 7C, 7D represent four different scenarios of shock loads corresponding to four key orientations of the shock load. Each shock load is modeled as 4.7 g inertia load. That magnitude is derived from rail car vibration tests, and it is deemed the highest possible magnitude of shock load for rail cars.

Load 7C addresses the vertical shock load that is resisted by the transportation skid saddles. In the case of load 7D, straps resist shock load impact (oriented upward). In the case of load 7A, an axial inertia load is applied (directed toward the cask top Lid), while case 7B represents a situation where an axial inertia load is directed toward the cask bottom.

Loads 8A and 8B represent vibration load settings deemed to be the most unfavorable for vibration loads. The magnitude of the vertical inertia load, 0.37 g, was conservatively increased to 0.42 g. Load 8C is evaluated conservatively by extrapolating the maximum stress intensity values from 8A and 8B by 150 percent.

Load 8A is directed toward the cask Lid, while Load 8B is directed toward the cask Bottom.

The thermal analysis includes two thermal load distributions which envelope the temperature distributions that encompass the range of ambient conditions and heat loads for the various payloads of the TN-LC package. The thermal stresses are determined using the temperature distributions obtained from the thermal heat transfer analysis of the various cask payloads with their corresponding heat loads and ambient conditions. The bounding thermal stress results for each environmental case (100°F and -20°F and -40°F combined) are summarized in Table 2.13.1-5 (100°F) and Table 2.13.1-6 (-40°F) for subsequent use in the load combinations.

The table below shows the load combinations used for the NCT evaluations. The combinations of the results from the individual load cases (Load Cases 1 to 12) are performed and correspond to Load Cases 13 to 26 in the Table below.

NCT – List of Load Combinations

Load Case	Load Combination	Individual Loads Participating in Load Combination										
		1	2	3	4	5	7(1)	8(2)	9	10	11	12
13	Hot Environment	X	X		X							X
14	Cold Environment	X		X		X						X
15	Increased Ext. Pressure	X		X		X						X
16	Minimum Ext. Pressure	X	X		X							X
17	Rail Car Vibration	X	X		X			X				
18		X		X		X		X				
19	Rail Car Shock	X	X		X		X					
20		X		X		X	X					
21	1 ft End Drop on Lid End	X	X		X				X			
22		X		X		X			X			
23	1 ft End Drop on Bottom End	X	X		X					X		
24		X		X		X				X		
25	1 ft Side Drop	X	X		X						X	
26		X		X		X					X	

Notes:
1. The envelope of rail car shock cases 7A, 7B, 7C, 7D.
2. The envelope of rail car vibration cases 8A, 8B, 8C.

2.13.1.4.2 Hypothetical Accident Conditions Cases

The individual load cases and associated loading conditions used for the HAC evaluations of the cask are presented in the table below. Pictorial illustrations of the applied loads for the various evaluated accident conditions are presented in Figure 2.13.1-20 through Figure 2.13.1-26.

HAC Load Combinations

Load No	Load Combination	Internal Pressure	External Pressure	Temperature(1)	Front Impact Limiter Loads(2)		Rear Impact Limiter Loads(2)	
		[psig]	[psig]	[°F]	Radial	Axial	Radial	Axial
27	30 ft End Drop on Bottom End	30		350		P_L		R_I, R_E
28			25	350		P_L		R_I, R_E
29	30 ft End Drop on Lid End	30		350		R_I, R_E		P_L
30			25	350		R_I, R_E		P_L
31	30 ftSide Drop	30		350	R_F		R_R	
32			25	350	R_F		R_R	
33	30 ftCG Over Corner Drop on Bottom End	30		350	P_{LR}	P_{LA}	R_{IR}, R_{ER}	R_{IA}, R_{EA}
34			25	350	P_{LR}	P_{LA}	R_{IR}, R_{ER}	R_{IA}, R_{EA}
35	30 ft CG Over Corner Drop on Lid End	30		350	R_{IR}, R_{ER}	R_{IA}, R_{EA}	P_{LR}	P_{LA}
36			25	350	R_{IR}, R_{ER}	R_{IA}, R_{EA}	P_{LR}	P_{LA}
37	30 ft Slap Down Corner Drop	30		350	R_F		R_R	
41	Immersion + Weight		290	350	R_F		R_R	
42	Fire Accident + Weight	120		620	R_F		R_R	

Notes:

1. Temperature 350° F represents an upper bound of thermal hot and thermal cold conditions; Temperature 620° F envelopes fire accident thermal conditions.
2. The description of these loads and their geometrical profile is provided in Section 2.13.1.5.2 and 2.13.1.5.3.
   P_L, P_{LA}, Pressure Loads Due to Limiter Weight – Axial Components
   P_{LR}, Pressure Loads Due to Limiter Weight – Radial Components
   R_I, R_E, R_{IA}, R_{EA}, Reaction Pressure Loads at Interface of Impact Limiter and cask body –Axial Components
   R_R, R_F, R_{IR}, R_{ER}, Reaction Pressure at Interface of Impact Limiter and cask body –Radial Components

The CG over corner drop and side drop accident cases are evaluated at 75g inertia-load. The end drop cases are evaluated at 95g inertia load.

In the case of CG Over Corner Drop (inertia load 75g) the drop angle is such that the center of gravity of the cask and impact limiter assembly is directly above the corner of the impact limiter as it initially contacts the unyielding surface. For the package, the 74° drop angle (between cask axis and unyielding surface) represents the geometric CG Over Corner drop scenario for the TN-LC cask design.

The CG Over Corner Drop is similar to the End Drop in that only one impact limiter is crushed, but the crush area increases with increasing crush depth as for the side drop.

2.13.1.5 NCT Loads Structural Evaluations

2.13.1.5.1 Basket Payload Weight

A basket payload impact is applied to the cask model based on the assumption of a basket + payload weight of 8000 lb.

2.13.1.5.1.1 One-Foot Side Drop and 1g Gravity

For the one-foot side drop and 1g gravity load evaluations, the payload weight is applied as a pressure load, distributed uniformly in the axial direction, and as a cosine shaped function over a ±75° angle sector in the circumferential direction. The maximum pressure is at the Inner Shell bottom (at the model symmetry line). The payload weight distribution for these load cases is shown in Figure 2.13.1-22 (pressure P_s).

2.13.1.5.1.2 One-Foot End Drop and 3g Lifting

For the one-foot end drop and the 3g lifting load evaluations, the payload weight is applied as a pressure load distributed uniformly over the area of contact with the Lid Assembly (for the top end drop) or the Bottom Flange Assembly (for the bottom end drop). The way the payload weight is applied in the top end drop and bottom end drop evaluations is illustrated in Figure 2.13.1-20 (for the top end drop) and Figure 2.13.1-21(for the bottom end drop). The payload weight pressure for these loads is denoted by P_I.

2.13.1.5.1.3 Rail Car Shock and Vibration

For the rail car shock and vibration load evaluations, the payload weight has an axial and a radial component. The axial load component is applied as a pressure distributed uniformly over the area of contact with the top Lid Assembly (Load Case 7A/8A) or the Bottom Flange Assembly (Load Case 7B/8B). The radial load is applied as a pressure load distributed uniformly in the axial direction and as a cosine function in the circumferential direction over a ±75° angle sector.

2.13.1.5.2 Application of Impact Limiter Weight to the Cask Body

Loads applied to the cask model are based on the assumption that the front and back impact limiter masses are 1500 lb each.

2.13.1.5.2.1 One-Foot Side Drop

In the one-foot side drop, it is assumed that one-foot. impact is mitigated evenly by both front and rear limiters, and the impact limiters weight does not contribute to cask response.

2.13.1.5.2.2 One-Foot End Drop

For the one-foot bottom end drop evaluations, the full weight of the front limiter is imposed as a uniform axial pressure load acting on the effective area of contact of the front impact limiter with the cask body.

For the one-foot top end drop evaluations, the full weight of the rear impact limiter is imposed as a uniform axial pressure load acting on the effective area of the contact of the rear impact limiter with the cask body.

The pressure load due to impact limiter weight for top and bottom end drop cases are illustrated in Figure 2.13.1-20 and Figure 2.13.1-21 for the top and bottom end drops, respectively. The pressure for these loads is denoted P_I.

2.13.1.5.2.3 Rail Car Shock and Vibration

For the rail car shock and vibration load evaluations, the impact limiter weight is applied as axial and radial pressure loads.

For the case when the load is directly towards the bottom end, the axial component of the weight of the front impact limiter is applied as a positive (pushing) pressure load distributed uniformly over the contact area of the limiter with the cask lid and top flange. The radial component, acting on the outer surface of the top flange and outer shell is applied as a pressure load distributed uniformly in the axial direction and as a cosine shaped function over a ±75° sector in the circumferential direction.

A negative (pulling) pressure is applied to account for the weight of the rear impact limiter distributed uniformly over the area of contact of the bottom flange ring and rear impact limiter.

For the case when the load is directly toward the lid end, the axial component of the weight of the rear impact limiter is applied as a positive pressure distributed uniformly across the area of contact of the rear impact limiter with the bottom cap plate and bottom flange. The radial component, acting on the outer surface of the bottom flange and outer shell is applied as a pressure load distributed uniformly in the axial direction and as a cosine shaped function over a ±75° sector in the circumferential direction.

A negative (pulling) pressure is applied to account for the weight of the front impact limiter distributed uniformly over the area of contact of the top flange ring and the front impact limiter.

2.13.1.5.3 Application of Reaction Forces from Impact Load to the Cask Body

For the side drop and end drop evaluations, the impact limiters are not explicitly modeled. The crush loads or the reaction forces at the interface between impact limiters and cask body are represented as pressure loads.

2.13.1.5.3.1 Side Drop

In the side drop evaluations, the radial reaction forces are imposed as a pressure load distributed uniformly in the axial direction and as a cosine shaped function in the circumferential direction over a ±75° sector. The maximum pressure is at the cask bottom (at the model symmetry line). The reaction pressure loads are illustrated in Figure 2.13.1-22. The R_R is the reaction load of rear impact limiter; R_F is the reaction load of front impact limiter.

2.13.1.5.3.2 End Drop

For end drop evaluations, the axial reaction force is imposed as a pressure load distributed in the form of a two-level step function. Due to the significantly dissimilar axial stiffness, the reaction force is represented by a two-level step function (lower in the central area within the lid or bottom plate perimeter) and higher in the outer part of the top flange or bottom flange rings.

These loads are shown in Figure 2.13.1-20 (for the top end drop) and Figure 2.13.1-21 (for the bottom end drop) as loads R_I and R_E. The ratio of total reaction forces for R_E and R_I can be estimated by the following relations:

For the bottom end drop case, the following relationship is employed to calculate R_E and R_I:

$$\frac{R_E}{R_I} = \frac{\text{Cask Body Weight} + \text{Front 1L Weight} - (\text{Cap, Plug} + \text{Bushing} + \text{Lead Cap, Bottom} + \text{End Cap} + \text{Tube} + \text{Gamma Shielding (8D)} + \text{Gamma Shielding (5C)}) \text{ Weight}}{\text{Payload Weight} + (\text{Cap, Plug} + \text{Bushing} + \text{Lead Cap, Bottom} + \text{End Cap} + \text{Tube} + \text{Gamma Shielding (8D)} + \text{Gamma Shielding (5C)}) \text{ Weight}}$$

$$R_E + R_I = \text{Cask Body Weight} + \text{Payload Weight} + \text{Front Impact Limiter Weight}$$

For the top end drop case, the following ratio R_E/R_I is employed to calculate R_E and R_I:

$$\frac{R_E}{R_I}:$$

$$\frac{\text{Cask Body Weight} + \text{Rear 1L Weight} - (\text{Lid} + \text{Gamma Shielding (3D)} + \text{Gamma Shielding Cap}) \text{ Weight}}{\text{Payload Weight} + \text{Lid} + \text{Gamma Shielding (3D)} + \text{Gamma Shielding Weight}}$$

$$R_E + R_I = \text{Cask Body Weight} + \text{Payload Weight} + \text{Rear Impact Limiter Weight}$$

Values of total reaction forces R_I and R_E for end drop calculations are shown in Table 2.13.1-19 and Table 2.13.1-20.

2.13.1.6 HAC Loads Structural Evaluations

2.13.1.6.1 Application of Payload to the Cask Body

Payload (weight of basket and fuel) is applied to the cask model based on the bounding weight of 8,000 lb.

2.13.1.6.1.1 Side Drop Evaluation

For the side drop evaluations, the payload weight is applied as a pressure load distributed uniformly in the axial direction and as a cosine shaped function over a ±75° angle sector in the circumferential direction. The maximum of pressure is at the inner shell bottom (at the model symmetry line). The weight distribution for the side drop case is shown in Figure 2.13.1-22 (pressure P_s).

2.13.1.6.1.2 End Drop Evaluation

For the end drop evaluation, the payload weight is applied as a pressure load distributed uniformly over the area of contact with the lid assembly (for the top end drop) or the bottom flange assembly (for the bottom end drop). The way the payload weight is applied for the top end drop and the bottom end drop is illustrated in Figure 2.13.1-20 (top end drop) and Figure 2.13.1-21 (for the bottom end drop). The payload weight pressure for these loads is denoted by P_I.

2.13.1.6.1.3 Corner Drop Evaluations

In the corner drop calculations, the payload weight is applied as an axial load and a radial load.

The axial load component is applied as a pressure load distributed uniformly over the area of contact with the lid assembly (for the top end drop) or the bottom flange assembly (for the bottom end drop). The radial load component is applied as a pressure rising linearly towards the striking corner in the axial direction and as a cosine shaped function over a ±75° angle sector in the circumferential direction. The maximum pressure P_{max} is at the cask bottom (at the model symmetry line) at the striking corner.

The loads for corner drops are illustrated in Figure 2.13.1-23 (for CG Over Corner Drop on the Lid End) and Figure 2.13.1-24 (for CG Over Corner Drop on the Bottom End). The payload axial pressure is denoted P_{IA}. The radial pressure is denoted P_{IR}.

2.13.1.6.1.4 Slap Down Drop Evaluation

The oblique drop (slap down) cases at drop angles of 5° and 10° were evaluated in Appendix 2.13.12. The maximum g load of 130 occurs at 10° second impact. For the oblique drop (slap down) case, the maximum g load occurs either at the top end (slap down second impact at top end) or the bottom end (slap down second impact at bottom end). The maximum g load linearly decreases from the impact end along the length of the cask. For cask body structural evaluation, the top and bottom ends of the cask are analyzed for 130 g acceleration perpendicular to impact to bound the acceleration of the cask during slap down event. The acceleration in the middle portion of the cask is smaller than the side drop case. Therefore, the middle portion of the cask is bounded by the 75 g side drop evaluation.

2.13.1.6.2 Application of Impact Limiter Weight to the Cask Body

Loads applied to the cask model are based on a front impact limiter weight of 1,500 lb and a rear impact limiter weight of 1,500 lb. These weights bound the actual weight of the impact limiters.

2.13.1.6.2.1 Side Drop Evaluation

In the side drop accident it is assumed that the impact is mitigated evenly by both the front and rear impact limiters, and the impact limiters weight does not contribute to cask response.

2.13.1.6.2.2 End Drop Evaluation

For the bottom end drop evaluations, the full weight of the front limiter is applied as a uniform axial pressure load acting on the effective area of contact of the front impact limiter with the cask body.

For the top end drop evaluations, the full weight of the rear impact limiter is applied as a uniform axial pressure load acting on the effective area of contact of the rear impact limiter with the cask body.

The pressure load due to impact limiter weight for the top end drop and the bottom end drop cases are illustrated in Figure 2.13.1-20 (top end drop) and Figure 2.13.1-21 (bottom end drop). The pressure for these loads is denoted P_L.

2.13.1.6.2.3 Corner Drop Evaluation

For the corner drop scenarios, axial and radial pressure loads simulate the effect of impact limiter weight.

For the corner drops on the bottom end, the axial component is applied as a pressure load distributed uniformly across the area of contact of the impact limiter with the lid and top flange. The radial component acting on the outer surface of the top flange and outer shell is applied as a pressure load distributed uniformly in the axial direction and as a cosine shaped function over a ±75° angle sector in the circumferential direction.

For the corner drops on the lid end, the axial component is applied as a pressure load distributed uniformly across the area of contact of the rear impact limiter with the bottom flange assembly. The radial component acting on the outer surface of the bottom flange and outer shell is applied as a pressure load distributed uniformly in an axial direction and as a cosine shaped function over a ±75° angle sector in the circumferential direction.

The pressure load due to the impact limiter weight for the corner drops is illustrated in Figure 2.13.1-23 (CG Over Corner Drop on Lid End) and Figure 2.13.1-24 (CG Over Corner Drop on Bottom End). The radial pressure component for these loads is denoted P_{LR}. The axial pressure component for these loads is denoted P_{LA}.

2.13.1.6.2.4 Slap Down Drop Evaluation

See Section 2.13.1.6.1.4..

2.13.1.6.3 Application of Reaction Forces from Impact Load to the Cask Body

The crush loads at the interface between the impact limiters and the cask body are represented as the pressure loads.

2.13.1.6.3.1 Side Drop Evaluation

For the side drop evaluations, the radial reaction forces are applied as a pressure load distributed uniformly in the axial direction and as the cosine shaped function over a ±75° angle sector in the circumferential direction. The maximum pressure is at the cask bottom (at the model symmetry line). The reaction pressure loads are illustrated in Figure 2.13.1-22. The R_R is the reaction load of the rear

impact limiter; R_F is the reaction load of the front impact limiter. Values of reaction forces R_F and R_R are tabulated in Table 2.13.1-21 (rear impact limiter) and Table 2.13.1-22 (front impact limiter).

2.13.1.6.3.2 End Drop Evaluation

For the end drop evaluations, the axial reaction force is applied as a pressure load distributed in the form of a two-level step function. Due to the significantly dissimilar axial stiffness, the reaction force is lower in the central part of the crush area (the area within the inner shell ID perimeter on the lid assembly and the bottom flange/bottom plug) and higher in the outer part (the area within the outer shell OD and the inner shell ID perimeter lid/top flange and bottom flange).

These pressure loads are shown in Figure 2.13.1-20 (top end drop) and Figure 2.13.1-21 (bottom end drop) as loads R_{IA} and R_{EA}. It is assumed that the ratio of total reaction forces for R_{EA} and R_{IA} can be estimated by the following relations:

For the end drop on bottom end cases, the following relation is employed to calculate the R_E and R_I:

$$\frac{R_E}{R_I} = \frac{\text{Cask Body Weight} + \text{Front 1L Weight} - (\text{Cap, Plug} + \text{Bushing} + \text{Lead Cap, Bottom} + \text{End Cap} + \text{Tube} + \text{Gamma Shielding (8D)} + \text{Gamma Shielding (5C)}) \text{ Weight}}{\text{Payload Weight} + (\text{Cap, Plug} + \text{Bushing} + \text{Lead Cap, Bottom} + \text{End Cap} + \text{Tube} + \text{Gamma Shielding (8D)} + \text{Gamma Shielding (5C)}) \text{ Weight}}$$

$$R_E + R_I = \text{Cask Body Weight} + \text{Payload Weight} + \text{Front Impact Limiter Weight}$$

For the top end drop case, the following ratio R_E/R_I is employed to calculate R_E and R_I:

$$\frac{R_E}{R_I} = \frac{\text{Cask Body Weight} + \text{Rear 1L Weight} - (\text{Lid} + \text{Gamma Shielding (3D)} + \text{Gamma Shielding Cap}) \text{ Weight}}{\text{Payload Weight} + \text{Lid} + \text{Gamma Shielding (3D)} + \text{Gamma Shielding Weight}}$$

$$R_E + R_I = \text{Cask Body Weight} + \text{Payload Weight} + \text{Rear Impact Limiter Weight}$$

Values of the total reaction forces R_I and R_E for all end drop evaluations are presented in Table 2.13.1-21 (rear impact limiter) and Table 2.13.1-22 (front impact limiter).

2.13.1.6.3.3 Corner Drop Evaluation

The axial reaction force is modeled consistently with the end drop model, but it is assumed to be distributed linearly in the transverse direction, with maximum pressure at the bottom, at the impacted corner.

The axial reaction pressure loads for corner drops are shown in Figure 2.13.1-23 (for CG Over Corner Drop on Lid End) and Figure 2.13.1-24 (for CG Over Corner Drop on Bottom End). The axial reaction loads are denoted as loads R_{IA} and R_{EA}.

It is assumed that the ratio of total reaction forces for R_{IA} and R_{EA} can be estimated by the following relations:

For the scenario of the corner bottom end drop, the following relation is employed to estimate the ratio of R_{IA} and R_{EA}:

$$\frac{R_{EA}}{R_{IA}} = \frac{\text{Cask Body Weight} + \text{Front 1L Weight} - (\text{Cap, Plug} + \text{Bushing} + \text{Lead Cap, Bottom} + \text{End Cap} + \text{Tube} + \text{Gamma Shielding (8D)} + \text{Gamma Shielding (5C)}) \text{ Weight}}{\text{Payload Weight} + (\text{Cap, Plug} + \text{Bushing} + \text{Lead Cap, Bottom} + \text{End Cap} + \text{Tube} + \text{Gamma Shielding (8D)} + \text{Gamma Shielding (5C)}) \text{ Weight}}$$

For the scenario of the corner top end drop, the following relation is employed to estimate the ratio of R_{IA} and R_{EA}:

$$\frac{R_{EA}}{R_{IA}} = \frac{\text{Cask Body Weight} + \text{Rear Impact Limiter Weight} - \text{Lid Weight}}{\text{Payload Weight} + \text{Lid Weight}}$$

The radial reaction force is applied as a pressure load distributed axially in the form of a two-level step function and as the Cosine-Hyperbolic-cosine (cos×cosh) shaped function circumferentially in the ±90° angle span.

The radial reaction pressure loads for corner drops are shown in Figure 2.13.1-23 (CG Over Corner Drop on Lid End) and Figure 2.13.1-24 (CG Over Corner Drop on Bottom End). The radial reaction loads are denoted as loads R_{ER} and R_{IR}.

For the corner drop on the bottom end evaluations, R_{ER} is the total reaction force generated at the outer 7.5 in. axial section (bottom flange axial thickness to the bottom cap) of the rear impact limiter. R_{IR} is the total reaction force generated on the remaining 11.5-7.5 = 4.0–in. thick section of the cask impact limiter. The uniform axial distribution of the reaction load pressure on the rear impact limiter corresponds to the load split with the ratio $R_{ER} / (R_{IR} + R_{ER}) = 75/115$. The evaluation uses this value of the split load.

For the corner drop on the lid end, R_{ER} is the total reaction force generated at the outer 7.5 in. axial section (lid thickness) of the front impact limiter. R_{IR} is the total reaction force generated on the remaining 11.5-7.5 = 4.0 in. thick section of the cask impact limiter. The uniform axial distribution of reaction load on the front impact limiter corresponds to the load split with the ratio $R_{ER}/(R_{IR} + R_{ER}) = 75/115$. The evaluation uses this value of the split load.

The uniform reaction pressure distribution obtained with the above defined loads conservatively maximizes the bending stresses at the impact area.

Reaction pressure load magnitudes used in calculations are summarized in Table 2.13.1-21 (rear impact limiter) and Table 2.13.1-22 (front impact limiter).

2.13.1.6.3.4 Slap Down Drop Evaluation

See Section 2.13.1.6.1.4.

2.13.1.7 NCT Stress Evaluation

The stresses resulting from the NCT evaluations of the TN-LC transport cask design are assessed against the stress limits for Service Level A of the ASME Code, Section III, Subsection NB [3]. The Code imposes limits on:

1. General primary membrane stress (PM),
2. Local primary membrane stress (PL),
3. Primary membrane plus bending stress (PM/PL+PB),
4. Primary membrane plus bending and secondary membrane plus bending stress (PM+PB+Q), referred as P+Q in the following stress reporting tables.

The ASME Code limits are S_m–for general primary membrane stress; $1.5S_m$ – for local primary membrane stress; $1.5S_m$ – for primary membrane plus bending stress; $3.0S_m$ – for primary membrane plus bending stress and secondary membrane plus bending stress.

2.13.1.7.1 Stress Criteria

The stress criteria employed in stress assessments of the TN-LC cask are summarized below:

Allowable Stresses	SA 240 Type 304/SA-182 Type F304				SA 240 XM-19/SA 182 Type FXM19			
Temperature	Properties		NCT Allowables		Properties		NCT Allowables	
350°F	S_y	21.6 ksi	PM	19.3 ksi	S_y	42.0 ksi	PM	30.9 ksi
	S_u	65.1 ksi	PL+PB	29.0 ksi	S_u	92.7 ksi	PL+PB	46.4 ksi
	S_m	19.3 ksi	P+Q	57.9 ksi	S_m	30.9 ksi	P+Q	92.7 ksi

2.13.1.7.2 Load Combinations and Reporting of Stress Results

The individual NCT load cases analyzed are described in Section 2.13.1.4. For purposes of reporting stress results, the cask body is divided into fifteen (15) components shown in Figure 2.13.1-1 and Figure 2.13.1-2. For each component, the stresses are categorized according to the rules of the ASME Code, Section III, Subsection NB for Class 1 Components (PM, PL+PB, P+Q) [3]. The highest stress intensity values obtained for each component and for the each individual load case are summarized in Table 2.13.1-2 to Table 2.13.1-18.

The stress intensity values for the individual load cases shown in Table 2.13.1-2 to Table 2.13.1-18 are combined in accordance with the various load combinations to determine the total stress for each cask component for a particular load combination. The tables in Section 2.13.1.4 provide a matrix of the individual loads (Load Cases 1 to 12) and the various load combinations (Load Cases 13 to 26) used to determine the cask body stresses for the specified normal conditions of transport. The "x" in the table for Load Cases 13 to 26 indicates the individual load cases that are used in the load combinations.

The following conservative procedure is used in the calculation of the reported total (combined) stress intensity. For a given cask component, the maximum stress intensity from each individual load case is calculated and added (per each load combination) together regardless of the location of maximum stress. This approach is conservative relative to algebraically adding the corresponding stress components for

each individual load case and then determining the resulting stress intensity for the appropriate load combination. The stress intensity obtained through this conservative procedure is, therefore, an upper bound since it represents the absolute sum rather than the algebraic sum of the stresses.

The following table shows the NCT load combinations used and points to the tables that summarize the results for each load combination. The results for the individual load cases (Load Cases 1 to 12 in Section 2.13.1.4) are summarized in Table 2.13.1-2 to Table 2.13.1-18 and the results for each load combination for NCT (Load Cases 13 to 26) are summarized in Table 2.13.1-23 to Table 2.13.1-36.

Load Combination Number	Load Combination Method	Load Combination Stress Result Table No.
13	1+2+4+12	Table 2.13.1-23
14	1+3+5+12	Table 2.13.1-24
15	1+3+5+12	Table 2.13.1-25
16	1+2+4+12	Table 2.13.1-26
17	1+2+4+max(8A,8B, 8C)	Table 2.13.1-27
18	1+3+5+max(8A,8B, 8C)	Table 2.13.1-28
19	1+2+4+max(7A,7B,7C,7D)	Table 2.13.1-29
20	1+3+5+max(7A,7B,7C,7D)	Table 2.13.1-30
21	1+2+4+9	Table 2.13.1-31
22	1+3+5+9	Table 2.13.1-32
23	1+2+4+10	Table 2.13.1-33
24	1+3+5+10	Table 2.13.1-34
25	1+2+4+11	Table 2.13.1-35
26	1+3+5+11	Table 2.13.1-36

For example, for load combination number 13 (Table 2.13.1-23), the stress intensity values for the outer shell in the individual load cases (1 + 2 + 4 + 12) are combined as shown in the following table:

	PM	PL + PB	P +Q
Individual Load Case #1 (Table 2.13.1-2)	0 ksi	0 ksi	0 ksi
Individual Load Case #2 (Table 2.13.1-3)	0.1 ksi	0.1 ksi	0.1 ksi
Individual Load Case #4 (Table 2.13.1-5)	0 ksi	0 ksi	13.5 ksi
Individual Load Case #12 (Table 2.13.1-18)	1.5 ksi	3.3 ksi	3.3 ksi
Combined Load Case #13 (Table 2.13.1-23)	1.6 ksi	3.4 ksi	16.9 ksi

For those load cases that have alternative scenarios (rail car shock cases 7A, 7B, 7C, 7D, and rail car vibration cases 8A, 8B), the maximum stress of the given load category is used in the load combination.

2.13.1.7.3 Summary of the NCT Stress Results

Table 2.13.1-23 through Table 2.13.1-36 summarize the stress results for all the NCT loading conditions. These tables show the general primary membrane stresses PM, local primary membrane plus bending

stresses PL + PB, and primary plus secondary stresses P + Q for all the analyzed load cases meet the applicable ASME Code stress criteria. The stress ratios listed in the table are the calculated stresses divided by the allowable stresses.

From the analysis results presented in these tables, it is concluded that the normal loads stress limits are met and, therefore, that the containment function of the transport cask is maintained.

2.13.1.8 HAC Stress Evaluation

The HAC events are evaluated as short duration, Level D conditions. ASME Code criteria are used to ensure structural integrity of the pressure retaining boundary. In accordance with the Level D provisions of the Code, secondary stresses need not be evaluated. Similarly, bearing stresses need not be evaluated except for pinned or bolted joints (F-1341.6) [3].

Thus, for accident conditions, the Code imposes limits on:

1. General primary membrane stress intensity (PM),
2. Local primary membrane stress (P_L),
3. Primary membrane plus bending stress intensity (PL, PL+PB).

The stress criteria are taken from Section III, Appendix F of ASME Code [3]. For elastic analysis (F-1341.1), the primary membrane stress intensity (P_m) is limited to the smaller of the 2.4 S_m or 0.7 S_u, and membrane plus bending stress intensities ($P_m + P_b$) are limited to the smaller of the 3.6 S_m or 150% of the limit for P_m. However, the membrane plus bending stress intensities are conservatively limited to S_u. When elastic methodology and acceptance criteria are not acceptable, plastic analysis and criteria of ASME Section III, Appendix F, F-1341.2 are employed. For the plastic analysis, the primary membrane stress intensity (P_m) is limited to 0.7 S_u, and membrane plus bending stress intensities ($P_m + P_b$) are limited to 0.9 S_u.

The acceptance criteria for the TN-LC transport cask components are summarized below.

2.13.1.8.1 Stress Criteria

Stress criteria employed in stress assessments are summarized below:

HAC Acceptance Criteria (Elastic Methodology)

Allowable Stresses	SA 240 Type 304/SA-182 Type F304				SA 240 XM-19/SA-182 Type FXM19			
Temperature	**Properties**		**Allowable Stress**		**Properties**		**Allowable Stress**	
350 °F	S_y	21.6 ksi	PM	45.6 ksi	S_y	42.0 ksi	PM	64.9 ksi
	S_u	65.1 ksi	PL	65.1 ksi	S_u	92.7 ksi	PL	92.7 ksi
	S_m	19.3 ksi	PL+PB	65.1 ksi	S_m	30.9 ksi	PL+PB	92.7 ksi
620 °F	Sy	18.2 ksi	PM	39.5 ksi	Sy	37.2 ksi	PM	61.2 ksi
	Su	63.4 ksi	PL	59.2 ksi	Su	87.4 ksi	PL	87.4 ksi
	Sm	16.4 ksi	PL+PB	59.2 ksi	Sm	29.1 ksi	PL+PB	87.4 ksi

HAC Acceptance Criteria (Plastic Methodology)

Allowable Stresses	SA 240 Type 304, SA-182 Type F304				SA 240 XM-19, SA-182 Type FXM19			
Temperature	**Properties**		**Level D Allowables**		**Properties**		**Level D Allowables**	
350 °F	Sy	21.6 ksi	PM	45.6 ksi	Sy	42.0 ksi	PM	64.9 ksi
	Su	65.1 ksi	PL	58.6 ksi	Su	92.7 ksi	PL	83.4 ksi
	Sm	19.3 ksi	PL+PB	58.6 ksi	Sm	30.9 ksi	PL+PB	83.4 ksi

2.13.1.8.2 Load Combination and Reporting of Stress Results

This section summarizes stress results for all HAC load combinations. The following table shows the HAC load combinations used and points to the tables that summarize the results for each HAC load combination. The stress results for each load for HAC shown in the table in Section 2.13.1.4 (Load Cases 27 to 37, 41 and 42), are summarized in Table 2.13.1-41 to Table 2.13.1-55.

HAC–List of Load Combination Cases					
Load Combination No.	**Load**	**Internal Pressure (psig)**	**External Pressure (psig)**	**Temp. Hot (°F)**	**Stress Result Table No.**
27	30 ft End Drop on Bottom End	30		350	Table 2.13.1-41
28			25	350	Table 2.13.1-42
29	30 ft End Drop on Lid End	30		350	Table 2.13.1-43
30			25	350	Table 2.13.1-44
31	30 ft Side Drop	30		350	Table 2.13.1-45
31		30		350	Table 2.13.1-46
32			25	350	Table 2.13.1-47
32			25	350	Table 2.13.1-48
33	30 ft CG Over Corner Drop on Bottom End	30		350	Table 2.13.1-49
34			25	350	Table 2.13.1-50
35	30 ft CG Over Corner Drop on Lid End	30		350	Table 2.13.1-51
36			25	350	Table 2.13.1-52
37	30 ft Slap Down Corner Drop	30		350	Table 2.13.1-53
41	Immersion + Weight		290	350	Table 2.13.1-54
42	Fire Accident + Weight	120		620	Table 2.13.1-55

For the analysis of the HAC load cases, all the loads that are part of the load combination are included as input to the ANSYS analysis (drop load, pressure load, etc.). Therefore, the resulting stress corresponds to the load combination result.

Table 2.13.1-41 through Table 2.13.1-55 summarize stress results for the HAC loading conditions.

Stress assessments show that the TN-LC design satisfies imposed ASME stress criteria for Hypothetical Accident Conditions.

From the analysis results presented in Table 2.13.1-41 through Table 2.13.1-55, it is concluded that the structural integrity and containment function of the TN-LC transport cask are maintained for HAC loads.

2.13.1.8.3 Elastic/Plastic Analysis of TN-LC Cask Body Due to HAC Loads

Stress results summarized in Table 2.13.1-41 through Table 2.13.1-55, except Table 2.13.1-46 and Table 2.13.1-48, are based on elastic analysis methodology and evaluated in accordance with the ASME Code, Appendix F [4] Elastic Analysis criteria (Paragraph F-1341.1) [3]. Based on the results shown on these tables, cask component stresses for these load cases remain in the elastic range, except for the outer shell in two load cases.

In the side drop with 30 psig internal pressure and side drop with 25 psig external pressure, the outer shell stresses slightly exceed the Code elastic allowables [3]. However, as shown in Figure 2.13.1-1 and Figure 2.13.1-2, the outer shell component is not a containment boundary component of the cask. Moreover, the outer shell component has been shown to meet the ASME Code allowable stress limits for

plastic analysis, as shown in Table 2.13.1-46 and Table 2.13.1-48, which were evaluated with ASME Code, Appendix F[4] Plastic Analysis criteria (Paragraph F-1331.2) [3].

2.13.1.8.4 Method of Interpretation/Obtaining the Stress Results From ANSYS Model

The stress results from the ANSYS finite element model are used to compare with the Code allowables. The criteria are based on ASME Code, Section III, Subsection NB requirements [3]. The Code imposes limits on:

1. General primary membrane stress (PM)
2. Local primary stress (PL)
3. Primary membrane plus bending stress (PM/PL+PB)

The general primary stress PM is interpreted as an average stress across the solid section of the structural component that does not include the effect of discontinuities and concentrations and is produced only by pressure and/or mechanical loads. The local membrane stress PL is the same as PM, except that it also takes into account the effect of gross discontinuities. Primary bending stress PB is a variable part of stress across the solid section that does not include the effect of discontinuities and concentrations and is produced only by pressure and/or mechanical loads.

2.13.1.9 Stress Classification Paths

Per ASME Code requirements, stress classification sections or lines (paths) should comprise of all sections of the steel structure that potentially can contribute to the design failure [3]. In the case of the cask design, special attention needs to be focused on cask parts that compose the containment boundary of the payload.

In order to obtain an adequate amount of information regarding each category of the ASME Code primary or secondary stresses, for all cask components stress information is collected for a comprehensive, structured set of stress classification lines (paths).

For shell and plate sections of the cask structure, the ASME Code stress classification paths are predefined at all section locations as the across-the-wall thickness paths, normal to the cylinder or plate section mid-plane. For more complicated shapes of cask components, stress paths are also defined for most surface-node to surface-node paths across the wall thickness in locations and orientations meaningful for anticipated stress flow routes. The path locations are described in the table below. Stress paths at cask body symmetry plane are illustrated in Figure 2.13.1-27.

TN-LC Cask Component Finite Element Model Stress Paths

Component	Stress Paths
Outer Shell	Paths are defined using all nodal points on the inside shell surface (shell ID) to the corresponding points on the shell OD.
Inner Shell	Paths are defined using all nodal points on the inside shell surface (shell ID) to the corresponding points on the shell OD.
Lid	Paths are defined using all nodal points on the inside face of the lid (including the section of reduced thickness at the bolt area) to the corresponding points on the outside surface.
Top Flange	Paths are defined from all nodes on the inner surface to the corresponding nodes on the outer surface of the cylinder and cone segments of the flange.
Bottom Flange	Paths are defined from all nodes on the inner surface to the corresponding nodes on the outer surface of the cylinder and cone segments of the flange. Axial paths are defined from the nodal points on the inside surface of the flat portion of the forging to the corresponding nodal points on the outside surface.
Tube & Bushing	Paths are defined using all nodal points on the inside face of the plate to the corresponding points on the outside surface.
Bottom Plug, Bottom Lead Cap, End Cap, and Gamma Shielding Cap	Paths are defined using nodal points on the inside surface to the corresponding nodal points on the outside surface in the axial direction.

2.13.1.10 Stress Linearization Method

In order to correctly report the resulting stress as classified by the ASME Code, the stresses are linearized and membrane and bending stresses are separated for comparison with the ASME Code allowables.

Stress information at predefined paths and the stress linearization procedure are based on the method employed in the ANSYS Code. The method used in ANSYS is based on Gordon methodology [7]. Principal results data are mapped onto a path by first interpolating individual stress components (σ_x, σ_y, σ_z, σ_{xy}, σ_{xz}, σ_{zx}) to the path. Then, stress averaging through the wall path and the linearization are done independently for all six stress components.

Principal membrane stresses and membrane stress intensity are derived from membrane parts of the individual stress components. Similarly, linearized principal stresses and linearized stress intensity at the path section surface are derived from linearized individual stress components of that surface.

In the case of elastic analysis methodology, stress path evaluation in ANSYS calculates the an average stress intensity along the path, as well as maximum linearized stress at the path surface, PL+PB.

In the case of plastic analysis methodology, stress path evaluation in ANSYS calculates the the membrane stress along the path (classified conservatively as PM stress), as well as the maximum stress intensity (classified conservatively as the primary stress) for the classification path, derived from the total (not linearized) path stresses.

Conservatively, no distinction is assumed between paths located at gross or local discontinuities. Areas remote from these discontinuities and all path averaged stresses (including general primary stress intensities, PM, and local primary stress intensities, PL) are classified conservatively and reported as PM stresses and assessed against PM stress allowable.

Also, in order to simplify the PM+PB stress assessment, all membrane plus bending stresses reported from ANSYS model paths are classified as primary membrane and bending stresses, PM+PB, and assessed against PM+PB stress allowables.

2.13.1.10.1 Summary of TN-LC Cask Body Structural Evaluations

The stress results from the NCT loads are summarized in Table 2.13.1-2 through Table 2.13.1-18 and Table 2.13.1-23 through Table 2.13.1-36. The stress limits based on the ASME Code, Subsection NB [3] structural design criteria are also included in these tables. From the analysis results presented in these tables, it is shown that the NCT loads will not result in any structural damage to the cask, and the containment function of the cask will be maintained.

The stress results from the HAC loads are summarized in Table 2.13.1-41 through Table 2.13.1-55. The stress limits based on the ASME Code, Appendix F [3] structural design criteria for both plastic analysis and elastic analysis are also listed in the tables. From the analysis results presented in these tables, it is shown that the HAC loads will not result in any structural damage to the cask, and the containment function of the cask will be maintained.

2.13.1.11 References

1. 10CFR71, Packaging and Transportation of Radioactive Material.

2. Regulatory Guide 7.8, "Load Combinations for the Structural Analysis of Shipping Casks for Radioactive Material."

3. ASME Code Section III, Division 1, Subsection NB and Appendix F, 2004, including 2006 addenda.

4. NUREG-1617, "Standard Review Plan for Transportation Packages for Spent Nuclear Fuel," March 2000.

5. Regulatory Guide 7.9, "Standard Format and Content of Part 71 Applications for Approval of Packages for Radioactive Material."

6. ANSYS Computer Code and User's Manual, Release 10.0A1.

7. Gordon, J. L., "OUTCUR: An Automated Evaluation of Two-Dimensional Finite Element Stresses" ASME Paper No. 76-WA/PVP-16, ASME Winter Annual Meeting (December 1976).

Table 2.13.1-1
TN-LC Cask Components (3D Finite Element Model)

Component Name	Element Type Number	Material Type Number	Input Density [lb/in^3]
Outer Shell	1	1	0.29000
Inner Shell	2	2	0.29000
Bottom Plug	3	3	0.29000
Bushing	4	4	0.29000
Lead Cap, Bottom	5	5	0.29000
Lid	6	6	0.29000
Top Flange	7	7	0.29000
Bottom Flange	8	8	0.29000
End Cap	9	9	0.29000
Tube	10	10	0.29000
Gamma Shielding (Drawing Item no. 8D)	11	11	0.41088
Gamma Shielding (Drawing Item no. 5C)	12	12	0.41088
Gamma Shielding (Drawing Item no. 3D)	13	13	0.41088
Gamma Shielding (Drawing Item no. 9)	14	14	0.41088
Gamma Shielding Cap	15	15	0.29000
Neutron Shield Assembly	16	16	4.41780

Table 2.13.1-2
Stress Results - Load Case 1 - Bolt Preload

#	Load Case 1		NCT - Bolt Preload								
			Max Stress [ksi] Stress Ratio			Allowable [ksi]			Material Properties [ksi]		
			PM	PL+PB	P+Q	PM	PL+PB	P+Q	Sy	Su	Sm
1	Outer Shell	SA-240 XM19	0.0	0.0	0.0	30.9	46.4	92.7	42.0	92.7	30.9
			0.1%	0.1%	0.0%						
2	Inner Shell	SA-240 XM19	0.0	0.1	0.1	30.9	46.4	92.7	42.0	92.7	30.9
			0.1%	0.1%	0.1%						
3	Bottom Plug	SA-240 Type 304	2.9	4.1	4.1	19.3	29.0	57.9	21.6	65.1	19.3
			15.0%	14.1%	7.1%						
4	Bushing	SA-240 Type 304	0.1	0.3	0.3	19.3	29.0	57.9	21.6	65.1	19.3
			0.7%	0.9%	0.5%						
5	Lead Cap, Bottom	SA-240 Type 304	0.0	0.1	0.1	19.3	29.0	57.9	21.6	65.1	19.3
			0.1%	0.2%	0.1%						
6	Lid	SA-182 Type F304	3.5	10.0	10.0	19.3	29.0	57.9	21.6	65.1	19.3
			18.1%	34.5%	17.2%						
7	Top Flange	SA-182 Type FXM19	2.4	4.2	4.2	30.9	46.4	92.7	42.0	92.7	30.9
			7.9%	9.0%	4.5%						
8	Bottom Flange	SA-182 Type FXM19	4.6	10.9	10.9	30.9	46.4	92.7	42.0	92.7	30.9
			14.9%	23.5%	11.7%						
9	End Cap	SA-240 Type 304	0.0	0.0	0.0	19.3	29.0	57.9	21.6	65.1	19.3
			0.0%	0.0%	0.0%						
10	Tube	SA-240 Type 304	0.2	0.3	0.3	19.3	29.0	57.9	21.6	65.1	19.3
			1.1%	1.0%	0.5%						
11	Gamma Shielding Cap	SA-240 Type 304	0.0	0.0	0.0	19.3	29.0	57.9	21.6	65.1	19.3
			0.0%	0.1%	0.0%						

Table 2.13.1-3
Stress Results - Load Case 2 - Internal Pressure 30 psig

#	Load Case 2		NCT - Internal Pressure 30 psig								
			Max Stress [ksi] Stress Ratio			Allowable [ksi]			Material Properties [ksi]		
			PM	PL+PB	P+Q	PM	PL+PB	P+Q	Sy	Su	Sm
1	Outer Shell	SA-240 XM19	0.1	0.1	0.1	30.9	46.4	92.7	42.0	92.7	30.9
			0.2%	0.1%	0.1%						
2	Inner Shell	SA-240 XM19	0.2	0.2	0.2	30.9	46.4	92.7	42.0	92.7	30.9
			0.7%	0.5%	0.2%						
3	Bottom Plug	SA-240 Type 304	0.1	0.1	0.1	19.3	29.0	57.9	21.6	65.1	19.3
			0.3%	0.5%	0.2%						
4	Bushing	SA-240 Type 304	0.0	0.1	0.1	19.3	29.0	57.9	21.6	65.1	19.3
			0.1%	0.4%	0.2%						
5	Lead Cap, Bottom	SA-240 Type 304	0.1	0.2	0.2	19.3	29.0	57.9	21.6	65.1	19.3
			0.5%	0.8%	0.4%						
6	Lid	SA-182 Type F304	0.2	0.3	0.3	19.3	29.0	57.9	21.6	65.1	19.3
			0.8%	1.1%	0.6%						
7	Top Flange	SA-182 Type FXM19	0.2	0.2	0.2	30.9	46.4	92.7	42.0	92.7	30.9
			0.6%	0.4%	0.2%						
8	Bottom Flange	SA-182 Type F304	0.2	0.4	0.4	30.9	46.4	92.7	42.0	92.7	30.9
			0.6%	0.9%	0.4%						
9	End Cap	SA-240 Type 304	0.3	0.4	0.4	19.3	29.0	57.9	21.6	65.1	19.3
			1.4%	1.5%	0.7%						
10	Tube	SA-240 Type 304	0.1	0.2	0.2	19.3	29.0	57.9	21.6	65.1	19.3
			0.7%	0.8%	0.4%						
11	Gamma Shielding Cap	SA-240 Type 304	0.3	0.4	0.4	19.3	29.0	57.9	21.6	65.1	19.3
			1.7%	1.3%	0.6%						

Table 2.13.1-4
Stress Results - Load Case 3 - External Pressure 25 psig

#	Load Case 3		NCT - External Pressure 25 psig								
			Max Stress [ksi] Stress Ratio			Allowable [ksi]			Material Properties [ksi]		
			PM	PL+PB	P+Q	PM	PL+PB	P+Q	Sy	Su	Sm
1	Outer Shell	SA-240 XM19	0.1	0.1	0.1	30.9	46.4	92.7	42.0	92.7	30.9
			0.4%	0.3%	0.2%						
2	Inner Shell	SA-240 XM19	0.1	0.1	0.1	30.9	46.4	92.7	42.0	92.7	30.9
			0.3%	0.2%	0.1%						
3	Bottom Plug	SA-240 Type 304	0.0	0.1	0.1	19.3	29.0	57.9	21.6	65.1	19.3
			0.2%	0.4%	0.2%						
4	Bushing	SA-240 Type 304	0.0	0.1	0.1	19.3	29.0	57.9	21.6	65.1	19.3
			0.1%	0.4%	0.2%						
5	Lead Cap, Bottom	SA-240 Type 304	0.0	0.1	0.1	19.3	29.0	57.9	21.6	65.1	19.3
			0.2%	0.4%	0.2%						
6	Lid	SA-182 Type F304	0.1	0.2	0.2	19.3	29.0	57.9	21.6	65.1	19.3
			0.5%	0.8%	0.4%						
7	Top Flange	SA-182 Type FXM19	0.1	0.2	0.2	30.9	46.4	92.7	42.0	92.7	30.9
			0.2%	0.3%	0.2%						
8	Bottom Flange	SA-182 Type FXM19	0.1	0.2	0.2	30.9	46.4	92.7	42.0	92.7	30.9
			0.4%	0.4%	0.2%						
9	End Cap	SA-240 Type 304	0.0	0.0	0.0	19.3	29.0	57.9	21.6	65.1	19.3
			0.0%	0.0%	0.0%						
10	Tube	SA-240 Type 304	0.1	0.1	0.1	19.3	29.0	57.9	21.6	65.1	19.3
			0.4%	0.4%	0.2%						
11	Gamma Shielding Cap	SA-240 Type 304	0.0	0.1	0.1	19.3	29.0	57.9	21.6	65.1	19.3
			0.1%	0.3%	0.2%						

Table 2.13.1-5
Stress Results - Load Case 4 - Hot Environment 100°F

#	Load Case 4		NCT - Hot Environment (100°F)								
			Max Stress [ksi] Stress Ratio			Allowable [ksi]			Material Properties [ksi]		
			PM	PL+PB	P+Q	PM	PL+PB	P+Q	Sy	Su	Sm
1	Outer Shell	SA-240 XM19	0.0	0.0	13.5	30.9	46.4	92.7	42.0	92.7	30.9
			0.0%	0.0%	14.6%						
2	Inner Shell	SA-240 XM19	0.0	0.0	12.5	30.9	46.4	92.7	42.0	92.7	30.9
			0.0%	0.0%	13.5%						
3	Bottom Plug	SA-240 Type 304	0.0	0.0	9.2	19.3	29.0	57.9	21.6	65.1	19.3
			0.0%	0.0%	15.8%						
4	Bushing	SA-240 Type 304	0.0	0.0	2.2	19.3	29.0	57.9	21.6	65.1	19.3
			0.0%	0.0%	3.8%						
5	Lead Cap, Bottom	SA-240 Type 304	0.0	0.0	12.7	19.3	29.0	57.9	21.6	65.1	19.3
			0.0%	0.0%	22.0%						
6	Lid	SA-182 Type F304	0.0	0.0	7.8	19.3	29.0	57.9	21.6	65.1	19.3
			0.0%	0.0%	13.5%						
7	Top Flange	SA-182 Type FXM19	0.0	0.0	14.9	30.9	46.4	92.7	42.0	92.7	30.9
			0.0%	0.0%	16.1%						
8	Bottom Flange	SA-182 Type FXM19	0.0	0.0	10.3	30.9	46.4	92.7	42.0	92.7	30.9
			0.0%	0.0%	11.1%						
9	End Cap	SA-240 Type 304	0.0	0.0	14.8	19.3	29.0	57.9	21.6	65.1	19.3
			0.0%	0.0%	25.6%						
10	Tube	SA-240 Type 304	0.0	0.0	8.5	19.3	29.0	57.9	21.6	65.1	19.3
			0.0%	0.0%	14.7%						
11	Gamma Shielding Cap	SA-240 Type 304	0.0	0.0	13.1	19.3	29.0	57.9	21.6	65.1	19.3
			0.0%	0.0%	22.7%						

Table 2.13.1-6
Stress Results - Load Case 5 - Cold Environment -40°F

#	Load Case 5		NCT - Cold Environment (-40°F)								
			Max Stress [ksi] Stress Ratio			Allowable [ksi]			Material Properties [ksi]		
			PM	PL+PB	P+Q	PM	PL+PB	P+Q	Sy	Su	Sm
1	Outer Shell	SA-240 XM19	0.0	0.0	2.5	30.9	46.4	92.7	42.0	92.7	30.9
			0.0%	0.0%	2.7%						
2	Inner Shell	SA-240 XM19	0.0	0.0	2.9	30.9	46.4	92.7	42.0	92.7	30.9
			0.0%	0.0%	3.2%						
3	Bottom Plug	SA-240 Type 304	0.0	0.0	0.3	19.3	29.0	57.9	21.6	65.1	19.3
			0.0%	0.0%	0.5%						
4	Bushing	SA-240 Type 304	0.0	0.0	0.3	19.3	29.0	57.9	21.6	65.1	19.3
			0.0%	0.0%	0.5%						
5	Lead Cap, Bottom	SA-240 Type 304	0.0	0.0	0.7	19.3	29.0	57.9	21.6	65.1	19.3
			0.0%	0.0%	1.2%						
6	Lid	SA-182 Type F304	0.0	0.0	0.5	19.3	29.0	57.9	21.6	65.1	19.3
			0.0%	0.0%	0.9%						
7	Top Flange	SA-182 Type FXM19	0.0	0.0	3.8	30.9	46.4	92.7	42.0	92.7	30.9
			0.0%	0.0%	4.1%						
8	Bottom Flange	SA-182 Type FXM19	0.0	0.0	3.1	30.9	46.4	92.7	42.0	92.7	30.9
			0.0%	0.0%	3.4%						
9	End Cap	SA-240 Type 304	0.0	0.0	0.0	19.3	29.0	57.9	21.6	65.1	19.3
			0.0%	0.0%	0.0%						
10	Tube	SA-240 Type 304	0.0	0.0	0.1	19.3	29.0	57.9	21.6	65.1	19.3
			0.0%	0.0%	0.1%						
11	Gamma Shielding Cap	SA-240 Type 304	0.0	0.0	0.0	19.3	29.0	57.9	21.6	65.1	19.3
			0.0%	0.0%	0.0%						

Table 2.13.1-7
Stress Results - Load Case 6 - 3 g Lifting

#	Load Case 6		NCT – 3 g Lifting								
			Max Stress [ksi] Stress Ratio			Allowable [ksi]			Material Properties [ksi]		
			PM	PL+PB	P+Q	PM	PL+PB	P+Q	Sy	Su	Sm
1	Outer Shell	SA-240 XM19	1.5	1.9	1.9	30.9	46.4	92.7	42.0	92.7	30.9
			5.0%	4.1%	2.1%						
2	Inner Shell	SA-240 XM19	0.7	1.1	1.1	30.9	46.4	92.7	42.0	92.7	30.9
			2.4%	2.3%	1.1%						
3	Bottom Plug	SA-240 Type 304	0.2	0.3	0.3	19.3	29.0	57.9	21.6	65.1	19.3
			0.8%	1.1%	0.6%						
4	Bushing	SA-240 Type 304	0.0	0.3	0.3	19.3	29.0	57.9	21.6	65.1	19.3
			0.2%	1.0%	0.5%						
5	Lead Cap, Bottom	SA-240 Type 304	0.3	0.9	0.9	19.3	29.0	57.9	21.6	65.1	19.3
			1.6%	3.1%	1.6%						
6	Lid	SA-182 Type F304	0.3	0.8	0.8	19.3	29.0	57.9	21.6	65.1	19.3
			1.6%	2.7%	1.3%						
7	Top Flange	SA-182 Type FXM19	1.1	1.5	1.5	30.9	46.4	92.7	42.0	92.7	30.9
			3.5%	3.2%	1.6%						
8	Bottom Flange	SA-182 Type FXM19	0.6	1.2	1.2	30.9	46.4	92.7	42.0	92.7	30.9
			1.8%	2.7%	1.3%						
9	End Cap	SA-240 Type 304	0.0	0.0	0.0	19.3	29.0	57.9	21.6	65.1	19.3
			0.0%	0.0%	0.0%						
10	Tube	SA-240 Type 304	0.3	0.4	0.4	19.3	29.0	57.9	21.6	65.1	19.3
			1.7%	1.3%	0.7%						
11	Gamma Shielding Cap	SA-240 Type 304	0.2	0.4	0.4	19.3	29.0	57.9	21.6	65.1	19.3
			0.9%	1.5%	0.7%						

Table 2.13.1-8
Stress Results - Load Case 7A - Rail Car Shock Loads - Scenario A

#	Load Case 7A		NCT - Rail Car Shock Loads - Scenario A								
			Max Stress [ksi] Stress Ratio			Allowable [ksi]			Material Properties [ksi]		
			PM	PL+PB	P+Q	PM	PL+PB	P+Q	Sy	Su	Sm
1	Outer Shell	SA-240 XM19	3.7	4.0	4.0	30.9	46.4	92.7	42.0	92.7	30.9
			11.9%	8.5%	4.3%						
2	Inner Shell	SA-240 XM19	1.0	1.2	1.2	30.9	46.4	92.7	42.0	92.7	30.9
			3.3%	2.6%	1.3%						
3	Bottom Plug	SA-240 Type 304	0.0	0.1	0.1	19.3	29.0	57.9	21.6	65.1	19.3
			0.1%	0.2%	0.1%						
4	Bushing	SA-240 Type 304	0.0	0.1	0.1	19.3	29.0	57.9	21.6	65.1	19.3
			0.0%	0.2%	0.1%						
5	Lead Cap, Bottom	SA-240 Type 304	0.2	0.7	0.7	19.3	29.0	57.9	21.6	65.1	19.3
			1.3%	2.3%	1.2%						
6	Lid	SA-182 Type F304	0.9	2.9	2.9	19.3	29.0	57.9	21.6	65.1	19.3
			4.5%	9.9%	4.9%						
7	Top Flange	SA-182 Type FXM19	1.3	2.3	2.3	30.9	46.4	92.7	42.0	92.7	30.9
			4.2%	5.0%	2.5%						
8	Bottom Flange	SA-182 Type FXM19	0.5	1.3	1.3	30.9	46.4	92.7	42.0	92.7	30.9
			1.6%	2.8%	1.4%						
9	End Cap	SA-240 Type 304	0.1	0.2	0.2	19.3	29.0	57.9	21.6	65.1	19.3
			0.5%	0.7%	0.3%						
10	Tube	SA-240 Type 304	0.1	0.1	0.1	19.3	29.0	57.9	21.6	65.1	19.3
			0.4%	0.4%	0.2%						
11	Gamma Shielding Cap	SA-240 Type 304	1.8	2.4	2.4	19.3	29.0	57.9	21.6	65.1	19.3
			9.3%	8.4%	4.2%						

Notes:

1. Stress in shear key bearing block assembly area is evaluated in Appendix 2.13.5. Outer Shell stress in the bearing block region (~10 in. around the bearing block boundary conditions section) is not evaluated in this load case.

Table 2.13.1-9
Stress Results - Load Case 7B - Rail Car Shock Loads - Scenario B

#	Load Case 7B		NCT - Rail Car Shock Loads - Scenario B								
			Max Stress [ksi] Stress Ratio			Allowable [ksi]			Material Properties [ksi]		
			PM	PL+PB	P+Q	PM	PL+PB	P+Q	Sy	Su	Sm
1	Outer Shell	SA-240 XM19	3.7	4.0	4.0	30.9	46.4	92.7	42.0	92.7	30.9
			12.0%	8.6%	4.3%						
2	Inner Shell	SA-240 XM19	0.6	0.7	0.7	30.9	46.4	92.7	42.0	92.7	30.9
			1.9%	1.6%	0.8%						
3	Bottom Plug	SA-240 Type 304	0.1	0.2	0.2	19.3	29.0	57.9	21.6	65.1	19.3
			0.5%	0.7%	0.4%						
4	Bushing	SA-240 Type 304	0.0	0.1	0.1	19.3	29.0	57.9	21.6	65.1	19.3
			0.1%	0.4%	0.2%						
5	Lead Cap, Bottom	SA-240 Type 304	0.7	2.0	2.0	19.3	29.0	57.9	21.6	65.1	19.3
			3.6%	6.9%	3.4%						
6	Lid	SA-182 Type F304	0.1	0.2	0.2	19.3	29.0	57.9	21.6	65.1	19.3
			0.6%	0.8%	0.4%						
7	Top Flange	SA-182 Type FXM19	0.5	1.3	1.3	30.9	46.4	92.7	42.0	92.7	30.9
			1.5%	2.7%	1.4%						
8	Bottom Flange	SA-182 Type FXM19	1.3	2.8	2.8	30.9	46.4	92.7	42.0	92.7	30.9
			4.3%	6.1%	3.0%						
9	End Cap	SA-240 Type 304	0.0	0.0	0.0	19.3	29.0	57.9	21.6	65.1	19.3
			0.0%	0.0%	0.0%						
10	Tube	SA-240 Type 304	0.1	0.1	0.1	19.3	29.0	57.9	21.6	65.1	19.3
			0.5%	0.4%	0.2%						
11	Gamma Shielding Cap	SA-240 Type 304	0.1	0.3	0.3	19.3	29.0	57.9	21.6	65.1	19.3
			0.5%	1.1%	0.5%						

Notes:
1. Stress in shear key bearing block assembly area is evaluated in Appendix 2.13.5. Outer Shell stress in the bearing block region (~10 in. around the bearing block boundary conditions section) is not evaluated in this load case.

Table 2.13.1-10
Stress Results - Load Case 7C - Rail Car Shock Loads - Scenario C

#	Load Case 7C		NCT - Rail Car Shock Loads - Scenario C								
			Max Stress [ksi] Stress Ratio			Allowable [ksi]			Material Properties [ksi]		
			PM	PL+PB	P+Q	PM	PL+PB	P+Q	Sy	Su	Sm
1	Outer Shell	SA-240 XM19	5.7	10.6	10.6	30.9	46.4	92.7	42.0	92.7	30.9
			18.5%	22.8%	11.4%						
2	Inner Shell	SA-240 XM19	2.0	3.5	3.5	30.9	46.4	92.7	42.0	92.7	30.9
			6.6%	7.7%	3.8%						
3	Bottom Plug	SA-240 Type 304	0.1	0.2	0.2	19.3	29.0	57.9	21.6	65.1	19.3
			0.3%	0.5%	0.3%						
4	Bushing	SA-240 Type 304	0.0	0.0	0.0	19.3	29.0	57.9	21.6	65.1	19.3
			0.1%	0.1%	0.1%						
5	Lead Cap, Bottom	SA-240 Type 304	1.5	2.9	2.9	19.3	29.0	57.9	21.6	65.1	19.3
			8.0%	10.1%	5.0%						
6	Lid	SA-182 Type F304	0.1	0.5	0.5	19.3	29.0	57.9	21.6	65.1	19.3
			0.7%	1.7%	0.9%						
7	Top Flange	SA-182 Type FXM19	1.9	4.1	4.1	30.9	46.4	92.7	42.0	92.7	30.9
			6.2%	8.9%	4.5%						
8	Bottom Flange	SA-182 Type FXM19	2.1	5.9	5.9	30.9	46.4	92.7	42.0	92.7	30.9
			6.8%	12.6%	6.3%						
9	End Cap	SA-240 Type 304	0.0	0.0	0.0	19.3	29.0	57.9	21.6	65.1	19.3
			0.0%	0.0%	0.0%						
10	Tube	SA-240 Type 304	0.2	0.3	0.3	19.3	29.0	57.9	21.6	65.1	19.3
			0.9%	0.9%	0.5%						
11	Gamma Shielding Cap	SA-240 Type 304	0.2	0.4	0.4	19.3	29.0	57.9	21.6	65.1	19.3
			1.2%	1.5%	0.8%						

Notes:

1. Stress in shear key bearing block assembly area is evaluated in Appendix 2.13.5. Outer Shell stress in the bearing block region (~10 in. around the bearing block boundary conditions section) is not evaluated in this load case.

Table 2.13.1-11
Stress Results - Load Case 7D - Rail Car Shock Loads - Scenario D

#	Load Case 7D		NCT - Rail Car Shock Loads - Scenario D								
			Max Stress [ksi] Stress Ratio			Allowable [ksi]			Material Properties [ksi]		
			PM	PL+PB	P+Q	PM	PL+PB	P+Q	Sy	Su	Sm
1	Outer Shell	SA-240 XM19	4.9	8.2	8.2	30.9	46.4	92.7	42.0	92.7	30.9
			15.9%	17.7%	8.8%						
2	Inner Shell	SA-240 XM19	2.1	2.3	2.3	30.9	46.4	92.7	42.0	92.7	30.9
			6.8%	5.0%	2.5%						
3	Bottom Plug	SA-240 Type 304	0.1	0.1	0.1	19.3	29.0	57.9	21.6	65.1	19.3
			0.3%	0.5%	0.2%						
4	Bushing	SA-240 Type 304	0.0	0.0	0.0	19.3	29.0	57.9	21.6	65.1	19.3
			0.1%	0.1%	0.0%						
5	Lead Cap, Bottom	SA-240 Type 304	0.4	0.7	0.7	19.3	29.0	57.9	21.6	65.1	19.3
			1.9%	2.5%	1.3%						
6	Lid	SA-182 Type F304	0.1	0.2	0.2	19.3	29.0	57.9	21.6	65.1	19.3
			0.4%	0.7%	0.4%						
7	Top Flange	SA-182 Type FXM19	1.1	2.4	2.4	30.9	46.4	92.7	42.0	92.7	30.9
			3.5%	5.2%	2.6%						
8	Bottom Flange	SA-182 Type FXM19	1.3	3.4	3.4	30.9	46.4	92.7	42.0	92.7	30.9
			4.2%	7.4%	3.7%						
9	End Cap	SA-240 Type 304	0.0	0.0	0.0	19.3	29.0	57.9	21.6	65.1	19.3
			0.0%	0.0%	0.0%						
10	Tube	SA-240 Type 304	0.2	0.3	0.3	19.3	29.0	57.9	21.6	65.1	19.3
			0.9%	1.0%	0.5%						
11	Gamma Shielding Cap	SA-240 Type 304	0.1	0.1	0.1	19.3	29.0	57.9	21.6	65.1	19.3
			0.4%	0.5%	0.2%						

Notes:

1. Stress in shear key bearing block assembly area is evaluated in calculation Appendix 2.13.5. Outer Shell stress in the bearing block region (~10 in. around the bearing block boundary conditions section) is not evaluated in this load case.

Table 2.13.1-12
Stress Results - Load Case 8A - Rail Car Vibration Loads - Scenario A

#	Load Case 8A		NCT - Rail Car Vibration Loads - Scenario A								
			Max Stress [ksi] Stress Ratio			Allowable [ksi]			Material Properties [ksi]		
			PM	PL+PB	P+Q	PM	PL+PB	P+Q	Sy	Su	Sm
1	Outer Shell	SA-240 XM19	0.6	1.2	1.2	30.9	46.4	92.7	42.0	92.7	30.9
			2.0%	2.6%	1.3%						
2	Inner Shell	SA-240 XM19	0.2	0.2	0.2	30.9	46.4	92.7	42.0	92.7	30.9
			0.7%	0.5%	0.3%						
3	Bottom Plug	SA-240 Type 304	0.0	0.0	0.0	19.3	29.0	57.9	21.6	65.1	19.3
			0.0%	0.1%	0.0%						
4	Bushing	SA-240 Type 304	0.0	0.0	0.0	19.3	29.0	57.9	21.6	65.1	19.3
			0.0%	0.0%	0.0%						
5	Lead Cap, Bottom	SA-240 Type 304	0.1	0.3	0.3	19.3	29.0	57.9	21.6	65.1	19.3
			0.7%	0.9%	0.4%						
6	Lid	SA-182 Type F304	0.0	0.1	0.1	19.3	29.0	57.9	21.6	65.1	19.3
			0.2%	0.4%	0.2%						
7	Top Flange	SA-182 Type FXM19	0.3	0.5	0.5	30.9	46.4	92.7	42.0	92.7	30.9
			0.9%	1.1%	0.5%						
8	Bottom Flange	SA-182 Type FXM19	0.2	0.7	0.7	30.9	46.4	92.7	42.0	92.7	30.9
			0.8%	1.4%	0.7%						
9	End Cap	SA-240 Type 304	0.0	0.0	0.0	19.3	29.0	57.9	21.6	65.1	19.3
			0.0%	0.0%	0.0%						
10	Tube	SA-240 Type 304	0.0	0.0	0.0	19.3	29.0	57.9	21.6	65.1	19.3
			0.1%	0.1%	0.0%						
11	Gamma Shielding Cap	SA-240 Type 304	0.1	0.1	0.1	19.3	29.0	57.9	21.6	65.1	19.3
			0.5%	0.4%	0.2%						

Notes:
1. Stress in shear key bearing block assembly area is evaluated in Appendix 2.13.5. Outer Shell stress in the bearing block region (~10 in. around the bearing block boundary conditions section) is not evaluated in this load case.

Table 2.13.1-13
Stress Results - Load Case 8B - Rail Car Vibration Loads - Scenario B

#	Load Case 8B		NCT - Rail Car Vibration Loads - Scenario B								
			Max Stress [ksi] Stress Ratio			Allowable [ksi]			Material Properties [ksi]		
			PM	PL+PB	P+Q	PM	PL+PB	P+Q	Sy	Su	Sm
1	Outer Shell	SA-240 XM19	0.6	1.3	1.3	30.9	46.4	92.7	42.0	92.7	30.9
			2.1%	2.8%	1.4%						
2	Inner Shell	SA-240 XM19	0.2	0.2	0.2	30.9	46.4	92.7	42.0	92.7	30.9
			0.7%	0.5%	0.2%						
3	Bottom Plug	SA-240 Type 304	0.0	0.0	0.0	19.3	29.0	57.9	21.6	65.1	19.3
			0.0%	0.1%	0.0%						
4	Bushing	SA-240 Type 304	0.0	0.0	0.0	19.3	29.0	57.9	21.6	65.1	19.3
			0.0%	0.0%	0.0%						
5	Lead Cap, Bottom	SA-240 Type 304	0.2	0.3	0.3	19.3	29.0	57.9	21.6	65.1	19.3
			1.0%	1.1%	0.6%						
6	Lid	SA-182 Type F304	0.0	0.0	0.0	19.3	29.0	57.9	21.6	65.1	19.3
			0.0%	0.1%	0.1%						
7	Top Flange	SA-182 Type FXM19	0.2	0.5	0.5	30.9	46.4	92.7	42.0	92.7	30.9
			0.7%	1.0%	0.5%						
8	Bottom Flange	SA-182 Type FXM19	0.3	0.7	0.7	30.9	46.4	92.7	42.0	92.7	30.9
			0.9%	1.6%	0.8%						
9	End Cap	SA-240 Type 304	0.0	0.0	0.0	19.3	29.0	57.9	21.6	65.1	19.3
			0.0%	0.0%	0.0%						
10	Tube	SA-240 Type 304	0.0	0.0	0.0	19.3	29.0	57.9	21.6	65.1	19.3
			0.1%	0.1%	0.0%						
11	Gamma Shielding Cap	SA-240 Type 304	0.0	0.0	0.0	19.3	29.0	57.9	21.6	65.1	19.3
			0.0%	0.1%	0.0%						

Notes:
1. Stress in shear key bearing block assembly area is evaluated in Appendix 2.13.5. Outer Shell stress in the bearing block region (~10 in. around the bearing block boundary conditions section) is not evaluated in this load case.

Table 2.13.1-14
Stress Results - Load Case 8C - Truck Vibration Loads

#	Load Case 8C		NCT - Truck Vibration Loads - 1.5xMax(8A, 8B)								
			Max Stress [ksi] Stress Ratio			Allowable [ksi]			Material Properties [ksi]		
			PM	PL+PB	P+Q	PM	PL+PB	P+Q	Sy	Su	Sm
1	Outer Shell	SA-240 XM19	1.0	1.9	1.9	30.9	46.4	92.7	42.0	92.7	30.9
			3.1%	4.2%	2.1%						
2	Inner Shell	SA-240 XM19	0.3	0.3	0.3	30.9	46.4	92.7	42.0	92.7	30.9
			1.0%	0.8%	0.4%						
3	Bottom Plug	SA-240 Type 304	0.0	0.0	0.0	19.3	29.0	57.9	21.6	65.1	19.3
			0.0%	0.1%	0.0%						
4	Bushing	SA-240 Type 304	0.0	0.0	0.0	19.3	29.0	57.9	21.6	65.1	19.3
			0.0%	0.0%	0.0%						
5	Lead Cap, Bottom	SA-240 Type 304	0.3	0.5	0.5	19.3	29.0	57.9	21.6	65.1	19.3
			1.4%	1.7%	0.8%						
6	Lid	SA-182 Type F304	0.1	0.2	0.2	19.3	29.0	57.9	21.6	65.1	19.3
			0.3%	0.7%	0.3%						
7	Top Flange	SA-182 Type FXM19	0.4	0.8	0.8	30.9	46.4	92.7	42.0	92.7	30.9
			1.4%	1.6%	0.8%						
8	Bottom Flange	SA-182 Type FXM19	0.4	1.1	1.1	30.9	46.4	92.7	42.0	92.7	30.9
			1.3%	2.3%	1.2%						
9	End Cap	SA-240 Type 304	0.0	0.0	0.0	19.3	29.0	57.9	21.6	65.1	19.3
			0.0%	0.0%	0.0%						
10	Tube	SA-240 Type 304	0.0	0.0	0.0	19.3	29.0	57.9	21.6	65.1	19.3
			0.1%	0.1%	0.1%						
11	Gamma Shielding Cap	SA-240 Type 304	0.1	0.2	0.2	19.3	29.0	57.9	21.6	65.1	19.3
			0.7%	0.7%	0.3%						

Table 2.13.1-15
Stress Results - Load Case 9 – One-Foot Vertical Drop on Lid End

#	Load Case 9		NCT – One-Foot Vertical Drop on Lid End (35g)								
			Max Stress [ksi] Stress Ratio			Allowable [ksi]			Material Properties [ksi]		
			PM	PL+PB	P+Q	PM	PL+PB	P+Q	Sy	Su	Sm
1	Outer Shell	SA-240 XM19	11.3	13.9	13.9	30.9	46.4	92.7	42.0	92.7	30.9
			36.7%	29.9%	14.9%						
2	Inner Shell	SA-240 XM19	8.6	11.0	11.0	30.9	46.4	92.7	42.0	92.7	30.9
			27.8%	23.7%	11.8%						
3	Bottom Plug	SA-240 Type 304	0.3	1.1	1.1	19.3	29.0	57.9	21.6	65.1	19.3
			1.6%	3.8%	1.9%						
4	Bushing	SA-240 Type 304	0.1	1.1	1.1	19.3	29.0	57.9	21.6	65.1	19.3
			0.6%	3.8%	1.9%						
5	Lead Cap, Bottom	SA-240 Type 304	0.8	2.4	2.4	19.3	29.0	57.9	21.6	65.1	19.3
			4.3%	8.1%	4.1%						
6	Lid	SA-182 Type F304	6.8	13.8	13.8	19.3	29.0	57.9	21.6	65.1	19.3
			35.3%	47.8%	23.9%						
7	Top Flange	SA-182 Type FXM19	10.3	12.6	12.6	30.9	46.4	92.7	42.0	92.7	30.9
			33.2%	27.2%	13.6%						
8	Bottom Flange	SA-182 Type FXM19	2.0	2.3	2.3	30.9	46.4	92.7	42.0	92.7	30.9
			6.6%	5.0%	2.5%						
9	End Cap	SA-240 Type 304	0.7	1.2	1.2	19.3	29.0	57.9	21.6	65.1	19.3
			3.7%	4.0%	2.0%						
10	Tube	SA-240 Type 304	1.0	1.5	1.5	19.3	29.0	57.9	21.6	65.1	19.3
			5.4%	5.3%	2.6%						
11	Gamma Shielding Cap	SA-240 Type 304	6.7	10.1	10.1	19.3	29.0	57.9	21.6	65.1	19.3
			34.7%	34.9%	17.5%						

Table 2.13.1-16
Stress Results - Load Case 10 - One-Foot Vertical Drop on Bottom End

#	Load Case 10		NCT – One-Foot Vertical Drop on Bottom End (45g)								
			Max Stress [ksi] Stress Ratio			Allowable [ksi]			Material Properties [ksi]		
			PM	PL+PB	P+Q	PM	PL+PB	P+Q	Sy	Su	Sm
1	Outer Shell	SA-240 XM19	10.9	12.5	12.5	30.9	46.4	92.7	42.0	92.7	30.9
			35.3%	27.0%	13.5%						
2	Inner Shell	SA-240 XM19	8.5	9.9	9.9	30.9	46.4	92.7	42.0	92.7	30.9
			27.7%	21.4%	10.7%						
3	Bottom Plug	SA-240 Type 304	2.5	5.0	5.0	19.3	29.0	57.9	21.6	65.1	19.3
			12.8%	17.3%	8.7%						
4	Bushing	SA-240 Type 304	1.3	3.0	3.0	19.3	29.0	57.9	21.6	65.1	19.3
			6.5%	10.3%	5.1%						
5	Lead Cap, Bottom	SA-240 Type 304	6.9	12.3	12.3	19.3	29.0	57.9	21.6	65.1	19.3
			35.8%	42.4%	21.2%						
6	Lid	SA-182 Type F304	0.5	1.6	1.6	19.3	29.0	57.9	21.6	65.1	19.3
			2.4%	5.6%	2.8%						
7	Top Flange	SA-182 Type FXM19	2.0	2.8	2.8	30.9	46.4	92.7	42.0	92.7	30.9
			6.5%	5.9%	3.0%						
8	Bottom Flange	SA-182 Type FXM19	10.1	12.4	12.4	30.9	46.4	92.7	42.0	92.7	30.9
			32.7%	26.8%	13.4%						
9	End Cap	SA-240 Type 304	0.0	0.0	0.0	19.3	29.0	57.9	21.6	65.1	19.3
			0.1%	0.1%	0.1%						
10	Tube	SA-240 Type 304	3.0	3.5	3.5	19.3	29.0	57.9	21.6	65.1	19.3
			15.8%	12.0%	6.0%						
11	Gamma Shielding Cap	SA-240 Type 304	0.9	1.9	1.9	19.3	29.0	57.9	21.6	65.1	19.3
			4.9%	6.7%	3.4%						

Table 2.13.1-17
Stress Results - Load Case 11 - One-Foot Side Drop

#	Load Case 11		NCT – One-Foot Side Drop (30g)								
			Max Stress [ksi] Stress Ratio			Allowable [ksi]			Material Properties [ksi]		
			PM	PL+PB	P+Q	PM	PL+PB	P+Q	Sy	Su	Sm
1	Outer Shell	SA-240 XM19	28.0	29.9	29.9	30.9	46.4	92.7	42.0	92.7	30.9
			90.7%	64.5%	32.3%						
2	Inner Shell	SA-240 XM19	19.7	21.1	21.1	30.9	46.4	92.7	42.0	92.7	30.9
			63.7%	45.6%	22.8%						
3	Bottom Plug	SA-240 Type 304	0.4	1.4	1.4	19.3	29.0	57.9	21.6	65.1	19.3
			2.2%	5.0%	2.5%						
4	Bushing	SA-240 Type 304	0.2	0.2	0.2	19.3	29.0	57.9	21.6	65.1	19.3
			0.9%	0.7%	0.4%						
5	Lead Cap, Bottom	SA-240 Type 304	8.3	15.6	15.6	19.3	29.0	57.9	21.6	65.1	19.3
			43.1%	54.0%	27.0%						
6	Lid	SA-182 Type F304	4.8	11.9	11.9	19.3	29.0	57.9	21.6	65.1	19.3
			25.1%	41.2%	20.6%						
7	Top Flange	SA-182 Type FXM19	14.5	17.1	17.1	30.9	46.4	92.7	42.0	92.7	30.9
			46.8%	36.8%	18.4%						
8	Bottom Flange	SA-182 Type FXM19	11.7	19.3	19.3	30.9	46.4	92.7	42.0	92.7	30.9
			37.7%	41.7%	20.9%						
9	End Cap	SA-240 Type 304	0.1	0.1	0.1	19.3	29.0	57.9	21.6	65.1	19.3
			0.3%	0.3%	0.1%						
10	Tube	SA-240 Type 304	1.1	1.8	1.8	19.3	29.0	57.9	21.6	65.1	19.3
			5.7%	6.2%	3.1%						
11	Gamma Shielding Cap	SA-240 Type 304	7.1	11.9	11.9	19.3	29.0	57.9	21.6	65.1	19.3
			36.7%	41.0%	20.5%						

Table 2.13.1-18
Stress Results - Load Case 12 - 1g Gravity

#	Load Case 12		NCT - 1g Gravity								
			Max Stress [ksi] Stress Ratio			Allowable [ksi]			Material Properties [ksi]		
			PM	PL+PB	P+Q	PM	PL+PB	P+Q	Sy	Su	Sm
1	Outer Shell	SA-240 XM19	1.5	3.3	3.3	30.9	46.4	92.7	42.0	92.7	30.9
			4.9%	7.1%	3.5%						
2	Inner Shell	SA-240 XM19	0.4	0.5	0.5	30.9	46.4	92.7	42.0	92.7	30.9
			1.4%	1.0%	0.5%						
3	Bottom Plug	SA-240 Type 304	0.0	0.0	0.0	19.3	29.0	57.9	21.6	65.1	19.3
			0.1%	0.1%	0.1%						
4	Bushing	SA-240 Type 304	0.0	0.0	0.0	19.3	29.0	57.9	21.6	65.1	19.3
			0.0%	0.0%	0.0%						
5	Lead Cap, Bottom	SA-240 Type 304	0.4	0.9	0.9	19.3	29.0	57.9	21.6	65.1	19.3
			2.2%	3.0%	1.5%						
6	Lid	SA-182 Type F304	0.0	0.1	0.1	19.3	29.0	57.9	21.6	65.1	19.3
			0.1%	0.2%	0.1%						
7	Top Flange	SA-182 Type FXM19	0.7	1.6	1.6	30.9	46.4	92.7	42.0	92.7	30.9
			2.4%	3.4%	1.7%						
8	Bottom Flange	SA-182 Type FXM19	0.8	2.1	2.1	30.9	46.4	92.7	42.0	92.7	30.9
			2.5%	4.5%	2.3%						
9	End Cap	SA-240 Type 304	0.0	0.0	0.0	19.3	29.0	57.9	21.6	65.1	19.3
			0.0%	0.0%	0.0%						
10	Tube	SA-240 Type 304	0.0	0.1	0.1	19.3	29.0	57.9	21.6	65.1	19.3
			0.2%	0.2%	0.1%						
11	Gamma Shielding Cap	SA-240 Type 304	0.0	0.1	0.1	19.3	29.0	57.9	21.6	65.1	19.3
			0.2%	0.2%	0.1%						

Notes:

1. Stress in shear key bearing block assembly area is evaluated in Appendix 2.13.5. Outer Shell stress in the bearing block region (~10 in. around the bearing block boundary conditions section) is not evaluated in this load case.

Table 2.13.1-19
NCT Rear Impact Limiter-Reaction Forces

REAR IMPACT LIMITER–REACTION FORCES			
Case		**Side Drop**	**End Drop on Bottom End**
Impact Angle	[deg]	0	90
Axial g-load	[g]	0	45
Transverse g-load	[g]	30	0
Axial Forces			
R_{EA} Bottom Flange	[kip]	0	951,479
R_{IA} Bottom Flange & Cap, Plug	[kip]	0	246,100
Total Axial Force	[kip]	0	1,197,580
Transverse Forces			
R_{ER} Limiter Outer Part	[kip]		0
R_{IR} Limiter Inner Part	[kip]		0
R_F Total Transverse Force	[kip]	363,590	0
Total Reaction Force			
Total Reaction Force	[kip]	363,590	1,197,580
Pressure Load Magnitudes			
Peak Axial Pressure External Region	[psi]	0	4,092
Peak Axial Pressure Internal Region	[psi]	0	1,501
Peak Radial P_{MAX} Outer Part	[psi]	2,980	0
Peak Radial P_{MAX} Inner Part	[psi]	2,980	0

Table 2.13.1-20
NCT Front Impact Limiter-Reaction Forces

FRONT IMPACT LIMITER–REACTION FORCES			
Case		**Side Drop**	**End Drop on Lid End**
Impact Angle	[deg]	0	90
Axial g-load	[g]	0	45
Transverse g-load	[g]	30	0
Axial Forces			
R_{EA} Flange Interface	[kip]		941,043
R_{IA} Lid Interface	[kip]		272,980
Total Axial Force	[kip]		1,214,023
Transverse Forces			
R_{ER} Limiter Outer Part	[kip]		0
R_{IR} Limiter Inner Part	[kip]		0
R_F Total Transverse Force	[kip]	363,672	0
Total Reaction Force			
Total Reaction Force	[kip]		1,214,023
Pressure Load Magnitudes			
Peak Axial Pressure Flange Interface	[psi]	0	4,213
Peak Axial Pressure Lid Interface	[psi]	0	1,541
Peak Radial P_{MAX} Outer Part	[psi]	2,982	0
Peak Radial P_{MAX} Inner Part	[psi]	2,982	0

Table 2.13.1-21
HAC Rear Impact Limiter– Reaction Forces

REAR IMPACT LIMITER–REACTION FORCES				
Case		**Side Drop**	**CG Over Corner Drop on Bottom End**	**End Drop on Bottom End**
Impact Angle	[deg]	0	74	90
Axial g-load	[g]	0	72.1	95
Transverse g-load	[g]	75	20.7	0
Axial Forces				
R_{EA} Bottom Flange	[kip]	0	1,524,323	2,008,809
R_{IA} Bottom Flange & Cap, Plug	[kip]	0	394,251	519,555
Total Axial Force	[kip]	0	1,918,574	2,528,364
Transverse Forces				
R_{ER} Limiter Outer Part	[kip]	0	335,115	0
R_{IR} Limiter Inner Part	[kip]	0	179,144	0
R_F Total Transverse Force	[kip]	908,911	514,259	0
Total Reaction Force				
Total Reaction Force	[kip]	908,911	1,986,301	2,528,364
Pressure Load Magnitudes				
Peak Axial Pressure(1) External Region	[psi]	0	12,944	8,638
Peak Axial Pressure(1) Internal Region	[psi]	0	4,761	3,170
Peak Radial P_{MAX} Outer Part	[psi]	7,451	3,253	0
Peak Radial P_{MAX} Inner Part	[psi]	7,451	3,253	0

Notes:
1. Axial pressure varies linearly along transverse coordinate for CG Over Corner Drop cases.

Table 2.13.1-22
HAC Front Impact Limiter– Reaction Forces

FRONT IMPACT LIMITER–REACTION FORCES				
Case		**Side Drop**	**CG Over Corner Drop on Lid End**	**End Drop on Lid End**
Impact Angle	[deg]	0	74	90
Axial g-load	[g]	0	72.1	95
Transverse g-load	[g]	75	20.7	0
Axial Forces				
R_{EA} Flange Interface	[kip]	0	1,507,610	1,986,775
R_{IA} Lid Interface	[kip]	0	437,320	576,289
Total Axial Force	[kip]	0	1,944,930	2,563,064
Transverse Forces				
R_{ER} Limiter Outer Part	[kip]	0	334,230	0
R_{IR} Limiter Inner Part	[kip]	0	179,176	0
R_F Total Transverse Force	[kip]	909349	513,406	0
Total Reaction Force				
Total Reaction Force	[kip]	909349	2,011,551	2,563,064
Pressure Load Magnitudes				
Peak Axial Pressure(1) Flange Interface	[psi]	0	13,277	8,893
Peak Axial Pressure(1) Lid Interface	[psi]	0	4,880	3,253
Peak Radial P_{MAX} Outer Part	[psi]	7455	3,253	0
Peak Radial P_{MAX} Inner Part	[psi]	7455	3,253	0

Notes:
1. Axial pressure varies linearly along transverse coordinate for Corner Drop/Slap Down cases.

Table 2.13.1-23
Stress Results - Load Combination 13 (Loads 1+2+4+12)

#	Load Combination 13		NCT - 1g Gravity + Preload + Hot Environment (100° F) + Internal Pressure								
			Max Stress [ksi] Stress Ratio			Allowable [ksi]			Material Properties [ksi]		
			PM	PL+PB	P+Q	PM	PL+PB	P+Q	Sy	Su	Sm
1	Outer Shell	SA-240 XM19	1.6	3.4	16.9	30.9	46.4	92.7	42.0	92.7	30.9
			5.2%	7.3%	18.2%						
2	Inner Shell	SA-240 XM19	0.7	0.8	13.3	30.9	46.4	92.7	42.0	92.7	30.9
			2.2%	1.6%	14.3%						
3	Bottom Plug	SA-240 Type 304	3.0	4.3	13.4	19.3	29.0	57.9	21.6	65.1	19.3
			15.4%	14.7%	23.2%						
4	Bushing	SA-240 Type 304	0.2	0.4	2.6	19.3	29.0	57.9	21.6	65.1	19.3
			0.8%	1.4%	4.5%						
5	Lead Cap, Bottom	SA-240 Type 304	0.5	1.2	13.9	19.3	29.0	57.9	21.6	65.1	19.3
			2.8%	4.1%	24.0%						
6	Lid	SA-182 Type F304	3.7	10.4	18.2	19.3	29.0	57.9	21.6	65.1	19.3
			18.9%	35.8%	31.5%						
7	Top Flange	SA-182 Type FXM19	3.4	6.0	20.9	30.9	46.4	92.7	42.0	92.7	30.9
			10.9%	12.9%	22.5%						
8	Bottom Flange	SA-182 Type FXM19	5.6	13.4	23.7	30.9	46.4	92.7	42.0	92.7	30.9
			18.0%	28.9%	25.6%						
9	End Cap	SA-240 Type 304	0.3	0.4	15.2	19.3	29.0	57.9	21.6	65.1	19.3
			1.4%	1.5%	26.3%						
10	Tube	SA-240 Type 304	0.4	0.6	9.1	19.3	29.0	57.9	21.6	65.1	19.3
			2.1%	2.0%	15.7%						
11	Gamma Shielding Cap	SA-240 Type 304	0.4	0.4	13.6	19.3	29.0	57.9	21.6	65.1	19.3
			1.8%	1.5%	23.5%						

Table 2.13.1-24
Stress Results - Load Combination 14 (Loads 1+3+5+12)

#	Load Combination 14		NCT - 1g Gravity + Preload + Cold Environment (-40° F) + External Pressure								
			Max Stress [ksi] Stress Ratio			Allowable [ksi]			Material Properties [ksi]		
			PM	PL+PB	P+Q	PM	PL+PB	P+Q	Sy	Su	Sm
1	Outer Shell	SA-240 XM19	1.7	3.5	5.9	30.9	46.4	92.7	42.0	92.7	30.9
			5.5%	7.5%	6.4%						
2	Inner Shell	SA-240 XM19	0.6	0.6	3.6	30.9	46.4	92.7	42.0	92.7	30.9
			1.9%	1.4%	3.8%						
3	Bottom Plug	SA-240 Type 304	2.9	4.2	4.5	19.3	29.0	57.9	21.6	65.1	19.3
			15.2%	14.6%	7.8%						
4	Bushing	SA-240 Type 304	0.2	0.4	0.7	19.3	29.0	57.9	21.6	65.1	19.3
			0.8%	1.3%	1.1%						
5	Lead Cap, Bottom	SA-240 Type 304	0.5	1.1	1.8	19.3	29.0	57.9	21.6	65.1	19.3
			2.5%	3.7%	3.1%						
6	Lid	SA-182 Type F304	3.6	10.3	10.8	19.3	29.0	57.9	21.6	65.1	19.3
			18.6%	35.5%	18.6%						
7	Top Flange	SA-182 Type FXM19	3.2	5.9	9.7	30.9	46.4	92.7	42.0	92.7	30.9
			10.5%	12.8%	10.5%						
8	Bottom Flange	SA-182 Type FXM19	5.5	13.2	16.3	30.9	46.4	92.7	42.0	92.7	30.9
			17.8%	28.5%	17.6%						
9	End Cap	SA-240 Type 304	0.0	0.0	0.0	19.3	29.0	57.9	21.6	65.1	19.3
			0.0%	0.0%	0.0%						
10	Tube	SA-240 Type 304	0.3	0.5	0.5	19.3	29.0	57.9	21.6	65.1	19.3
			1.7%	1.6%	0.9%						
11	Gamma Shielding Cap	SA-240 Type 304	0.1	0.2	0.2	19.3	29.0	57.9	21.6	65.1	19.3
			0.3%	0.6%	0.3%						

Table 2.13.1-25
Stress Results - Load Combination 15 (Loads 1+3+5+12)

#	Load Combination 15		NCT - 1g Gravity + Preload + Thermal Cold + External Pressure								
			Max Stress [ksi] Stress Ratio			Allowable [ksi]			Material Properties [ksi]		
			PM	PL+PB	P+Q	PM	PL+PB	P+Q	Sy	Su	Sm
1	Outer Shell	SA-240 XM19	1.7	3.5	17.0	30.9	46.4	92.7	42.0	92.7	30.9
			5.5%	7.5%	18.3%						
2	Inner Shell	SA-240 XM19	0.6	0.6	13.2	30.9	46.4	92.7	42.0	92.7	30.9
			1.9%	1.4%	14.2%						
3	Bottom Plug	SA-240 Type 304	2.9	4.2	13.4	19.3	29.0	57.9	21.6	65.1	19.3
			15.2%	14.6%	23.1%						
4	Bushing	SA-240 Type 304	0.2	0.4	2.6	19.3	29.0	57.9	21.6	65.1	19.3
			0.8%	1.3%	4.5%						
5	Lead Cap, Bottom	SA-240 Type 304	0.5	1.1	13.5	19.3	29.0	57.9	21.6	65.1	19.3
			2.5%	3.7%	23.8%						
6	Lid	SA-182 Type F304	3.6	10.3	18.1	19.3	29.0	57.9	21.6	65.1	19.3
			18.6%	35.5%	31.3%						
7	Top Flange	SA-182 Type FXM19	3.2	5.9	20.8	30.9	46.4	92.7	42.0	92.7	30.9
			10.5%	12.8%	22.5%						
8	Bottom Flange	SA-182 Type FXM19	5.5	13.2	23.5	30.9	46.4	92.7	42.0	92.7	30.9
			17.8%	28.5%	25.4%						
9	End Cap	SA-240 Type 304	0.0	0.0	14.8	19.3	29.0	57.9	21.6	65.1	19.3
			0.0%	0.0%	26.6%						
10	Tube	SA-240 Type 304	0.3	0.5	9.0	19.3	29.0	57.9	21.6	65.1	19.3
			1.7%	1.6%	5.6%						
11	Gamma Shielding Cap	SA-240 Type 304	0.1	0.2	13.3	19.3	29.0	57.9	21.6	65.1	19.3
			0.3%	0.6%	23.0%						

Table 2.13.1-26
Stress Results - Load Combination 16 (Loads 1+2+4+12)

#	Load Combination 16		NCT – 1g Gravity + Preload + Hot Environment (100° F) + Internal Pressure								
			Max Stress [ksi] Stress Ratio			Allowable [ksi]			Material Properties [ksi]		
			PM	PL+PB	P+Q	PM	PL+PB	P+Q	Sy	Su	Sm
1	Outer Shell	SA-240 XM19	1.6	3.4	16.9	30.9	46.4	92.7	42.0	92.7	30.9
			5.2%	7.3%	18.2%						
2	Inner Shell	SA-240 XM19	0.7	0.8	13.3	30.9	46.4	92.7	42.0	92.7	30.9
			2.2%	1.6%	14.3%						
3	Bottom Plug	SA-240 Type 304	3.0	4.3	13.4	19.3	29.0	57.9	21.6	65.1	19.3
			15.4%	14.7%	23.2%						
4	Bushing	SA-240 Type 304	0.2	0.4	2.6	19.3	29.0	57.9	21.6	65.1	19.3
			0.8%	1.4%	4.5%						
5	Lead Cap, Bottom	SA-240 Type 304	0.5	1.2	13.9	19.3	29.0	57.9	21.6	65.1	19.3
			2.8%	4.1%	24.0%						
6	Lid	SA-182 Type F304	3.7	10.4	18.2	19.3	29.0	57.9	21.6	65.1	19.3
			18.9%	35.8%	31.5%						
7	Top Flange	SA-182 Type FXM19	3.4	6.0	20.9	30.9	46.4	92.7	42.0	92.7	30.9
			10.9%	12.9%	22.5%						
8	Bottom Flange	SA-182 Type FXM19	5.6	13.4	23.7	30.9	46.4	92.7	42.0	92.7	30.9
			18.0%	28.9%	25.6%						
9	End Cap	SA-240 Type 304	0.3	0.4	15.2	19.3	29.0	57.9	21.6	65.1	19.3
			1.4%	1.5%	26.3%						
10	Tube	SA-240 Type 304	0.4	0.6	9.1	19.3	29.0	57.9	21.6	65.1	19.3
			2.1%	2.0%	15.7%						
11	Gamma Shielding Cap	SA-240 Type 304	0.4	0.4	13.6	19.3	29.0	57.9	21.6	65.1	19.3
			1.8%	1.5%	23.5%						

Table 2.13.1-27
Stress Results - Load Combination 17 (Loads 1+2+4+8)

#	Load Combination 17		NCT - Vibration Envelope + Preload + Hot Environment (100° F) + Internal Pressure								
			Max Stress [ksi] Stress Ratio			Allowable [ksi]			Material Properties [ksi]		
			PM	PL+PB	P+Q	PM	PL+PB	P+Q	Sy	Su	Sm
1	Outer Shell	SA-240 XM19	1.1	2.0	15.6	30.9	46.4	92.7	42.0	92.7	30.9
			3.4%	4.4%	16.8%						
2	Inner Shell	SA-240 XM19	0.6	0.6	13.2	30.9	46.4	92.7	42.0	92.7	30.9
			1.8%	1.4%	14.2%						
3	Bottom Plug	SA-240 Type 304	3.0	4.3	13.4	19.3	29.0	57.9	21.6	65.1	19.3
			15.3%	14.7%	23.2%						
4	Bushing	SA-240 Type 304	0.1	0.4	2.6	19.3	29.0	57.9	21.6	65.1	19.3
			0.8%	1.4%	4.5%						
5	Lead Cap, Bottom	SA-240 Type 304	0.4	0.8	13.5	19.3	29.0	57.9	21.6	65.1	19.3
			2.0%	2.7%	23.3%						
6	Lid	SA-182 Type F304	3.7	10.5	18.3	19.3	29.0	57.9	21.6	65.1	19.3
			19.2%	36.3%	31.7%						
7	Top Flange	SA-182 Type FXM19	3.1	5.2	20.1	30.9	46.4	92.7	42.0	92.7	30.9
			9.9%	11.1%	21.6%						
8	Bottom Flange	SA-182 Type FXM19	5.2	12.4	22.7	30.9	46.4	92.7	42.0	92.7	30.9
			16.8%	26.7%	24.5%						
9	End Cap	SA-240 Type 304	0.3	0.4	15.3	19.3	29.0	57.9	21.6	65.1	19.3
			1.4%	1.5%	26.3%						
10	Tube	SA-240 Type 304	0.4	0.6	9.1	19.3	29.0	57.9	21.6	65.1	19.3
			2.0%	1.9%	15.7%						
11	Gamma Shielding Cap	SA-240 Type 304	0.5	0.6	13.7	19.3	29.0	57.9	21.6	65.1	19.3
			2.4%	2.0%	23.7%						

Table 2.13.1-28
Stress Results - Load Combination 18 (Loads 1+3+5+8)

#	Load Combination 18		NCT - Rail Car Vibration Envelope + Preload + Cold Environment (-40° F) + External Pressure								
			Max Stress [ksi] Stress Ratio			Allowable [ksi]			Material Properties [ksi]		
			PM	PL+PB	P+Q	PM	PL+PB	P+Q	Sy	Su	Sm
1	Outer Shell	SA-240 XM19	1.1	2.1	4.6	30.9	46.4	92.7	42.0	92.7	30.9
			3.7%	4.5%	5.0%						
2	Inner Shell	SA-240 XM19	0.5	0.5	3.4	30.9	46.4	92.7	42.0	92.7	30.9
			1.5%	1.1%	3.7%						
3	Bottom Plug	SA-240 Type 304	2.9	4.2	4.5	19.3	29.0	57.9	21.6	65.1	19.3
			15.2%	14.6%	7.8%						
4	Bushing	SA-240 Type 304	0.2	0.4	0.7	19.3	29.0	57.9	21.6	65.1	19.3
			0.8%	1.3%	1.1%						
5	Lead Cap, Bottom	SA-240 Type 304	0.3	0.7	1.4	19.3	29.0	57.9	21.6	65.1	19.3
			1.7%	2.3%	2.4%						
6	Lid	SA-182 Type F304	3.6	10.4	10.9	19.3	29.0	57.9	21.6	65.1	19.3
			18.8%	35.9%	18.9%						
7	Top Flange	SA-182 Type FXM19	2.9	5.1	8.9	30.9	46.4	92.7	42.0	92.7	30.9
			9.5%	11.0%	9.6%						
8	Bottom Flange	SA-182 Type FXM19	5.1	12.2	15.3	30.9	46.4	92.7	42.0	92.7	30.9
			16.6%	26.3%	16.5%						
9	End Cap	SA-240 Type 304	0.0	0.0	0.0	19.3	29.0	57.9	21.6	65.1	19.3
			0.0%	0.1%	0.0%						
10	Tube	SA-240 Type 304	0.3	0.5	0.5	19.3	29.0	57.9	21.6	65.1	19.3
			1.7%	1.6%	0.9%						
11	Gamma Shielding Cap	SA-240 Type 304	0.2	0.3	0.3	19.3	29.0	57.9	21.6	65.1	19.3
			0.9%	1.1%	0.6%						

Table 2.13.1-29
Stress Results - Load Combination 19 (Loads 1+2+4+7)

#	Load Combination 19		NCT - Rail Car Shock Envelope + Preload + Hot Environment (100° F) + Internal Pressure								
			Max Stress [ksi] Stress Ratio			Allowable [ksi]			Material Properties [ksi]		
			PM	PL+PB	P+Q	PM	PL+PB	P+Q	Sy	Su	Sm
1	Outer Shell	SA-240 XM19	5.8	10.7	24.2	30.9	46.4	92.7	42.0	92.7	30.9
			18.7%	23.0%	26.1%						
2	Inner Shell	SA-240 XM19	2.4	3.8	16.4	30.9	46.4	92.7	42.0	92.7	30.9
			7.7%	8.3%	17.7%						
3	Bottom Plug	SA-240 Type 304	3.0	4.4	13.6	19.3	29.0	57.9	21.6	65.1	19.3
			15.8%	15.3%	23.5%						
4	Bushing	SA-240 Type 304	0.2	0.5	2.7	19.3	29.0	57.9	21.6	65.1	19.3
			0.9%	1.8%	4.7%						
5	Lead Cap, Bottom	SA-240 Type 304	1.6	3.2	16.0	19.3	29.0	57.9	21.6	65.1	19.3
			8.5%	11.1%	27.6%						
6	Lid	SA-182 Type F304	4.5	13.2	21.0	19.3	29.0	57.9	21.6	65.1	19.3
			23.4%	45.5%	36.3%						
7	Top Flange	SA-182 Type FXM19	4.6	8.5	23.4	30.9	46.4	92.7	42.0	92.7	30.9
			14.8%	18.4%	25.3%						
8	Bottom Flange	SA-182 Type FXM19	6.9	17.1	27.5	30.9	46.4	92.7	42.0	92.7	30.9
			22.3%	37.0%	29.6%						
9	End Cap	SA-240 Type 304	0.4	0.6	15.4	19.3	29.0	57.9	21.6	65.1	19.3
			1.8%	2.1%	26.7%						
10	Tube	SA-240 Type 304	0.5	0.8	9.3	19.3	29.0	57.9	21.6	65.1	19.3
			2.8%	2.8%	16.1%						
11	Gamma Shielding Cap	SA-240 Type 304	2.1	2.8	16.0	19.3	29.0	57.9	21.6	65.1	19.3
			11.0%	9.8%	27.6%						

Table 2.13.1-30
Stress Results - Load Combination 20 (Loads 1+3+5+7)

#	Load Combination 20		NCT - Rail Car Shock Envelope + Preload + Cold Environment (-40° F) + External Pressure								
			Max Stress [ksi] Stress Ratio			Allowable [ksi]			Material Properties [ksi]		
			PM	PL+PB	P+Q	PM	PL+PB	P+Q	Sy	Su	Sm
1	Outer Shell	SA-240 XM19	5.9	10.8	13.2	30.9	46.4	92.7	42.0	92.7	30.9
			19.0%	23.2%	14.3%						
2	Inner Shell	SA-240 XM19	2.3	3.7	6.6	30.9	46.4	92.7	42.0	92.7	30.9
			7.3%	8.0%	7.2%						
3	Bottom Plug	SA-240 Type 304	3.0	4.4	4.7	19.3	29.0	57.9	21.6	65.1	19.3
			15.7%	15.2%	8.1%						
4	Bushing	SA-240 Type 304	0.2	0.5	0.8	19.3	29.0	57.9	21.6	65.1	19.3
			0.9%	1.7%	1.3%						
5	Lead Cap, Bottom	SA-240 Type 304	1.6	3.1	3.8	19.3	29.0	57.9	21.6	65.1	19.3
			8.2%	10.8%	6.6%						
6	Lid	SA-182 Type F304	4.4	13.1	13.6	19.3	29.0	57.9	21.6	65.1	19.3
			23.0%	45.1%	23.5%						
7	Top Flange	SA-182 Type FXM19	4.4	8.5	12.3	30.9	46.4	92.7	42.0	92.7	30.9
			14.3%	18.3%	13.3%						
8	Bottom Flange	SA-182 Type FXM19	6.8	16.9	20.1	30.9	46.4	92.7	42.0	92.7	30.9
			22.1%	36.6%	21.6%						
9	End Cap	SA-240 Type 304	0.1	0.2	0.2	19.3	29.0	57.9	21.6	65.1	19.3
			0.5%	0.7%	0.3%						
10	Tube	SA-240 Type 304	0.5	0.7	0.8	19.3	29.0	57.9	21.6	65.1	19.3
			2.5%	2.4%	1.3%						
11	Gamma Shielding Cap	SA-240 Type 304	1.8	2.6	2.6	19.3	29.0	57.9	21.6	65.1	19.3
			9.5%	8.9%	4.5%						

Table 2.13.1-31
Stress Results - Load Combination 21 (Loads 1+2+4+9)

#	Load Combination 21		NCT – One ft End Drop on Lid End + Preload + Hot Environment (100° F) + Internal Pressure								
			Max Stress [ksi] Stress Ratio			Allowable [ksi]			Material Properties [ksi]		
			PM	PL+PB	P+Q	PM	PL+PB	P+Q	Sy	Su	Sm
1	Outer Shell	SA-240 XM19	11.4	14.0	27.5	30.9	46.4	92.7	42.0	92.7	30.9
			36.9%	30.1%	29.6%						
2	Inner Shell	SA-240 XM19	8.9	11.2	23.8	30.9	46.4	92.7	42.0	92.7	30.9
			28.7%	24.3%	25.7%						
3	Bottom Plug	SA-240 Type 304	3.3	5.3	14.5	19.3	29.0	57.9	21.6	65.1	19.3
			16.9%	18.5%	25.0%						
4	Bushing	SA-240 Type 304	0.3	1.5	3.7	19.3	29.0	57.9	21.6	65.1	19.3
			1.4%	5.2%	6.4%						
5	Lead Cap, Bottom	SA-240 Type 304	0.9	2.7	15.4	19.3	29.0	57.9	21.6	65.1	19.3
			4.8%	9.2%	26.6%						
6	Lid	SA-182 Type F304	10.5	24.2	32.0	19.3	29.0	57.9	21.6	65.1	19.3
			54.2%	83.4%	55.3%						
7	Top Flange	SA-182 Type FXM19	12.9	17.0	31.9	30.9	46.4	92.7	42.0	92.7	30.9
			41.7%	36.7%	34.4%						
8	Bottom Flange	SA-182 Type FXM19	6.8	13.6	23.9	30.9	46.4	92.7	42.0	92.7	30.9
			22.0%	29.4%	25.8%						
9	End Cap	SA-240 Type 304	1.0	1.6	16.4	19.3	29.0	57.9	21.6	65.1	19.3
			5.1%	5.5%	28.3%						
10	Tube	SA-240 Type 304	1.4	2.0	10.6	19.3	29.0	57.9	21.6	65.1	19.3
			7.2%	7.1%	18.3%						
11	Gamma Shielding Cap	SA-240 Type 304	7.0	10.5	23.6	19.3	29.0	57.9	21.6	65.1	19.3
			36.4%	36.3%	40.8%						

Table 2.13.1-32
Stress Results - Load Combination 22 (Loads 1+3+5+9)

#	Load Combination 22		NCT – One ft End Drop on Lid End + Preload + Cold Environment (-40° F) + External Pressure								
			Max Stress [ksi] Stress Ratio			Allowable [ksi]			Material Properties [ksi]		
			PM	PL+PB	P+Q	PM	PL+PB	P+Q	Sy	Su	Sm
1	Outer Shell	SA-240 XM19	11.5	14.0	16.5	30.9	46.4	92.7	42.0	92.7	30.9
			37.2%	30.3%	17.8%						
2	Inner Shell	SA-240 XM19	8.7	11.1	14.1	30.9	46.4	92.7	42.0	92.7	30.9
			28.3%	24.0%	15.2%						
3	Bottom Plug	SA-240 Type 304	3.2	5.3	5.6	19.3	29.0	57.9	21.6	65.1	19.3
			16.8%	18.4%	9.7%						
4	Bushing	SA-240 Type 304	0.3	1.5	1.7	19.3	29.0	57.9	21.6	65.1	19.3
			1.4%	5.1%	3.0%						
5	Lead Cap, Bottom	SA-240 Type 304	0.9	2.6	3.3	19.3	29.0	57.9	21.6	65.1	19.3
			4.6%	8.8%	5.7%						
6	Lid	SA-182 Type F304	10.4	24.1	24.6	19.3	29.0	57.9	21.6	65.1	19.3
			53.8%	83.1%	42.4%						
7	Top Flange	SA-182 Type FXM19	12.8	17.0	20.8	30.9	46.4	92.7	42.0	92.7	30.9
			41.3%	36.6%	22.4%						
8	Bottom Flange	SA-182 Type FXM19	6.8	13.4	16.5	30.9	46.4	92.7	42.0	92.7	30.9
			21.9%	28.9%	17.8%						
9	End Cap	SA-240 Type 304	0.7	1.2	1.2	19.3	29.0	57.9	21.6	65.1	19.3
			3.8%	4.1%	2.0%						
10	Tube	SA-240 Type 304	1.3	1.9	2.0	19.3	29.0	57.9	21.6	65.1	19.3
			6.9%	6.7%	3.5%						
11	Gamma Shielding Cap	SA-240 Type 304	6.7	10.2	10.3	19.3	29.0	57.9	21.6	65.1	19.3
			34.8%	35.4%	17.7%						

Table 2.13.1-33
Stress Results - Load Combination 23 (Loads 1+2+4+10)

#	Load Combination 23		NCT – One ft End Drop on Bottom End + Preload + Hot Environment (100° F) + Internal Pressure								
			Max Stress [ksi] Stress Ratio			Allowable [ksi]			Material Properties [ksi]		
			PM	PL+PB	P+Q	PM	PL+PB	P+Q	Sy	Su	Sm
1	Outer Shell	SA-240 XM19	11.0	12.6	26.1	30.9	46.4	92.7	42.0	92.7	30.9
			35.5%	27.2%	28.2%						
2	Inner Shell	SA-240 XM19	8.8	10.2	22.8	30.9	46.4	92.7	42.0	92.7	30.9
			28.5%	22.1%	24.5%						
3	Bottom Plug	SA-240 Type 304	5.4	9.3	18.4	19.3	29.0	57.9	21.6	65.1	19.3
			28.1%	32.0%	31.8%						
4	Bushing	SA-240 Type 304	1.4	3.4	5.6	19.3	29.0	57.9	21.6	65.1	19.3
			7.3%	11.6%	9.6%						
5	Lead Cap, Bottom	SA-240 Type 304	7.0	12.6	25.3	19.3	29.0	57.9	21.6	65.1	19.3
			36.4%	43.5%	43.7%						
6	Lid	SA-182 Type F304	4.1	11.9	19.8	19.3	29.0	57.9	21.6	65.1	19.3
			21.3%	41.2%	34.2%						
7	Top Flange	SA-182 Type FXM19	4.6	7.2	22.1	30.9	46.4	92.7	42.0	92.7	30.9
			15.0%	15.4%	23.8%						
8	Bottom Flange	SA-182 Type FXM19	14.9	23.7	34.0	30.9	46.4	92.7	42.0	92.7	30.9
			48.2%	51.2%	36.7%						
9	End Cap	SA-240 Type 304	0.3	0.5	15.3	19.3	29.0	57.9	21.6	65.1	19.3
			1.5%	1.6%	26.4%						
10	Tube	SA-240 Type 304	3.4	4.0	12.5	19.3	29.0	57.9	21.6	65.1	19.3
			17.6%	13.8%	21.7%						
11	Gamma Shielding Cap	SA-240 Type 304	1.3	2.3	15.5	19.3	29.0	57.9	21.6	65.1	19.3
			6.6%	8.1%	26.7%						

Table 2.13.1-34
Stress Results - Load Combination 24 (Loads 1+3+5+10)

#	Load Combination 24		NCT – One ft End Drop on Bottom End + Preload + Cold Environment (-40° F) + External Pressure								
			Max Stress [ksi] Stress Ratio			Allowable [ksi]			Material Properties [ksi]		
			PM	PL+PB	P+Q	PM	PL+PB	P+Q	Sy	Su	Sm
1	Outer Shell	SA-240 XM19	11.1	12.7	15.2	30.9	46.4	92.7	42.0	92.7	30.9
			35.8%	27.4%	16.4%						
2	Inner Shell	SA-240 XM19	8.7	10.1	13.0	30.9	46.4	92.7	42.0	92.7	30.9
			28.1%	21.8%	14.0%						
3	Bottom Plug	SA-240 Type 304	5.4	9.2	9.5	19.3	29.0	57.9	21.6	65.1	19.3
			28.0%	31.9%	16.4%						
4	Bushing	SA-240 Type 304	1.4	3.3	3.6	19.3	29.0	57.9	21.6	65.1	19.3
			7.3%	11.6%	6.3%						
5	Lead Cap, Bottom	SA-240 Type 304	7.0	12.5	13.2	19.3	29.0	57.9	21.6	65.1	19.3
			36.1%	43.1%	22.8%						
6	Lid	SA-182 Type F304	4.0	11.8	12.4	19.3	29.0	57.9	21.6	65.1	19.3
			20.9%	40.9%	21.3%						
7	Top Flange	SA-182 Type FXM19	4.5	7.1	10.9	30.9	46.4	92.7	42.0	92.7	30.9
			14.6%	15.3%	11.8%						
8	Bottom Flange	SA-182 Type FXM19	14.8	23.5	26.6	30.9	46.4	92.7	42.0	92.7	30.9
			48.0%	50.7%	28.7%						
9	End Cap	SA-240 Type 304	0.0	0.0	0.0	19.3	29.0	57.9	21.6	65.1	19.3
			0.1%	0.1%	0.1%						
10	Tube	SA-240 Type 304	3.3	3.9	4.0	19.3	29.0	57.9	21.6	65.1	19.3
			17.3%	13.5%	6.9%						
11	Gamma Shielding Cap	SA-240 Type 304	1.0	2.1	2.1	19.3	29.0	57.9	21.6	65.1	19.3
			5.0%	7.1%	3.6%						

Table 2.13.1-35
Stress Results - Load Combination 25 (Loads 1+2+4+11)

#	Load Combination 25		NCT – One ft Side Drop + Preload + Hot Environment (100° F) + Internal Pressure								
			Max Stress [ksi] Stress Ratio			Allowable [ksi]			Material Properties [ksi]		
			PM	PL+PB	P+Q	PM	PL+PB	P+Q	Sy	Su	Sm
1	Outer Shell	SA-240 XM19	28.1	30.0	43.5	30.9	46.4	92.7	42.0	92.7	30.9
			91.0%	64.7%	47.0%						
2	Inner Shell	SA-240 XM19	19.9	21.4	34.0	30.9	46.4	92.7	42.0	92.7	30.9
			64.5%	46.2%	36.6%						
3	Bottom Plug	SA-240 Type 304	3.4	5.7	14.8	19.3	29.0	57.9	21.6	65.1	19.3
			17.5%	19.6%	25.6%						
4	Bushing	SA-240 Type 304	0.3	0.6	2.8	19.3	29.0	57.9	21.6	65.1	19.3
			1.7%	2.1%	4.9%						
5	Lead Cap, Bottom	SA-240 Type 304	8.4	15.9	28.6	19.3	29.0	57.9	21.6	65.1	19.3
			43.6%	55.0%	49.5%						
6	Lid	SA-182 Type F304	8.5	22.2	30.1	19.3	29.0	57.9	21.6	65.1	19.3
			43.9%	76.8%	51.9%						
7	Top Flange	SA-182 Type FXM19	17.1	21.5	36.4	30.9	46.4	92.7	42.0	92.7	30.9
			55.3%	46.3%	39.2%						
8	Bottom Flange	SA-182 Type FXM19	16.5	30.6	41.0	30.9	46.4	92.7	42.0	92.7	30.9
			53.2%	66.1%	44.2%						
9	End Cap	SA-240 Type 304	0.3	0.5	15.3	19.3	29.0	57.9	21.6	65.1	19.3
			1.6%	1.7%	26.5%						
10	Tube	SA-240 Type 304	1.5	2.3	10.9	19.3	29.0	57.9	21.6	65.1	19.3
			7.6%	8.0%	18.8%						
11	Gamma Shielding Cap	SA-240 Type 304	7.4	12.3	25.4	19.3	29.0	57.9	21.6	65.1	19.3
			38.4%	42.4%	43.9%						

Table 2.13.1-36
Stress Results - Load Combination 26 (Loads 1+3+5+11)

#	Load Combination 26		NCT – One ft Side Drop + Preload + Cold Environment (-40° F) + External Pressure								
			Max Stress [ksi] Stress Ratio			Allowable [ksi]			Material Properties [ksi]		
			PM	PL+PB	P+Q	PM	PL+PB	P+Q	Sy	Su	Sm
1	Outer Shell	SA-240 XM19	28.2	30.1	32.6	30.9	46.4	92.7	42.0	92.7	30.9
			91.2%	64.9%	35.1%						
2	Inner Shell	SA-240 XM19	19.8	21.3	24.2	30.9	46.4	92.7	42.0	92.7	30.9
			64.1%	45.9%	26.1%						
3	Bottom Plug	SA-240 Type 304	3.4	5.6	5.9	19.3	29.0	57.9	21.6	65.1	19.3
			17.4%	19.5%	10.2%						
4	Bushing	SA-240 Type 304	0.3	0.6	0.9	19.3	29.0	57.9	21.6	65.1	19.3
			1.7%	2.0%	1.5%						
5	Lead Cap, Bottom	SA-240 Type 304	8.4	15.8	16.5	19.3	29.0	57.9	21.6	65.1	19.3
			43.4%	54.6%	28.6%						
6	Lid	SA-182 Type F304	8.4	22.1	22.7	19.3	29.0	57.9	21.6	65.1	19.3
			43.6%	76.5%	39.1%						
7	Top Flange	SA-182 Type FXM19	17.0	21.4	25.2	30.9	46.4	92.7	42.0	92.7	30.9
			54.9%	46.2%	27.2%						
8	Bottom Flange	SA-182 Type FXM19	16.4	30.4	33.5	30.9	46.4	92.7	42.0	92.7	30.9
			53.1%	65.7%	36.2%						
9	End Cap	SA-240 Type 304	0.1	0.1	0.1	19.3	29.0	57.9	21.6	65.1	19.3
			0.3%	0.3%	0.2%						
10	Tube	SA-240 Type 304	1.4	2.2	2.3	19.3	29.0	57.9	21.6	65.1	19.3
			7.2%	7.7%	3.9%						
11	Gamma Shielding Cap	SA-240 Type 304	7.1	12.0	12.0	19.3	29.0	57.9	21.6	65.1	19.3
			36.9%	41.4%	20.8%						

Table 2.13.1-37
NCT Pressure Loads Specifications (Bottom End Impacts)

WEIGHT LOAD MAGNITUDES			
Case		**Side Drop**	**End Drop on Bottom End**
Impact Angle	[deg]	0	90
Axial g-load	[g]	0	45
Transverse g-load	[g]	30	0
Payload Weight			
Axial Component	[kip]	0	180,739
Transverse Component	[kip]	125,960	0
Total Force	[kip]	125,960	180,739
Payload Pressure Load Magnitudes			
Axial at Bottom Plate	[psi]	0	1,481
Peak Radial Pressure P_{MAX}	[psi]	104	0
Front Impact Limiter Weight			
Axial Component	[kip]	0	35,988
Transverse Component	[kip]	0	
Total Force	[kip]	0	35,988
Front Impact Limiter Pressure Load Magnitudes			
Axial Pressure Whole Interface	[psi]	0	96
Peak Radial Pressure P_{MAX}	[psi]	0	0

Table 2.13.1-38
NCT Pressure Loads Specifications (Lid End Impacts)

WEIGHT LOAD MAGNITUDES			
Case		**Side Drop**	**End Drop on Lid End**
Impact Angle	[deg]	0	90
Axial g-load	[g]	0	45
Transverse g-load	[g]	30	0
Payload Weight			
Axial Component	[kip]	0	181,097
Transverse Component	[kip]	125,960	0
Total Force	[kip]	125,960	181,097
Payload Pressure Load Magnitudes			
Axial at Lid Interface	[psi]	0	1,410
Peak Radial Pressure P_{MAX}	[psi]	104	0
Rear Impact Limiter Weight			
Axial Component	[kip]	0	34,986
Transverse Component	[kip]	0	0
Total Force	[kip]	0	34,986
Rear Impact Limiter Pressure Load Magnitudes			
Axial Pressure Whole Interface	[psi]	0	95
Peak Radial Pressure P_{MAX}	[psi]	0	0

Table 2.13.1-39
HAC Pressure Loads Specifications (Bottom End Impacts)

WEIGHT LOAD MAGNITUDES			
Case		**Side Drop**	**End Drop on Bottom End**
Impact Angle	[deg]	0	90
Axial g-load	[g]	0	45
Transverse g-load	[g]	30	0
Payload Weight			
Axial Component	[kip]	0	180,739
Transverse Component	[kip]	125,960	0
Total Force	[kip]	125,960	180,739
Payload Pressure Load Magnitudes			
Axial at Bottom Plate	[psi]	0	1,481
Peak Radial Pressure P_{MAX}	[psi]	104	0
Front Impact Limiter Weight			
Axial Component	[kip]	0	35,988
Transverse Component	[kip]	0	
Total Force	[kip]	0	35,988
Front Impact Limiter Pressure Load Magnitudes			
Axial Pressure Whole Interface	[psi]	0	96
Peak Radial Pressure P_{MAX}	[psi]	0	0

Table 2.13.1-40
HAC Pressure Loads Specifications (Lid End Impacts)

WEIGHT LOAD MAGNITUDES			
Case		**Side Drop**	**End Drop on Lid End**
Impact Angle	[deg]	0	90
Axial g-load	[g]	0	45
Transverse g-load	[g]	30	0
Payload Weight			
Axial Component	[kip]	0	181,097
Transverse Component	[kip]	125,960	0
Total Force	[kip]	125,960	181,097
Payload Pressure Load Magnitudes			
Axial at Lid Interface	[psi]	0	1,410
Peak Radial Pressure P_{MAX}	[psi]	104	0
Rear Impact Limiter Weight			
Axial Component	[kip]	0	34,986
Transverse Component	[kip]	0	0
Total Force	[kip]	0	34,986
Rear Impact Limiter Pressure Load Magnitudes			
Axial Pressure Whole Interface	[psi]	0	95
Peak Radial Pressure P_{MAX}	[psi]	0	0

Table 2.13.1-41
HAC Stress Results-Load Combination 27

#	Load Case 27		HAC – 30 ft End Drop on Bottom End [95g, Internal Pressure 30 psig]								
			Max Stress [ksi] Stress Ratio			Allowable [ksi]			Material Properties [ksi]		
			PM	PL	PL+PB	PM	PL	PL+PB	Sy	Su	Sm
1	Outer Shell	SA-240 XM19	22.7	26.1	26.1	64.9	92.7	92.7	42.0	92.7	30.9
			34.9%	28.1%	28.1%						
2	Inner Shell	SA-240 XM19	16.8	19.3	19.3	64.9	92.7	92.7	42.0	92.7	30.9
			25.9%	20.9%	20.9%						
3	Bottom Plug	SA-240 Type 304	6.0	10.2	10.2	45.6	65.1	65.1	21.6	65.1	19.3
			13.1%	15.6%	15.6%						
4	Bushing	SA-240 Type 304	2.6	5.7	5.7	45.6	65.1	65.1	21.6	65.1	19.3
			5.7%	8.8%	8.8%						
5	Lead Cap, Bottom	SA-240 Type 304	14.3	24.3	24.3	45.6	65.1	65.1	21.6	65.1	19.3
			31.4%	37.3%	37.3%						
6	Lid	SA-182 Type F304	2.0	5.1	5.1	45.6	65.1	65.1	21.6	65.1	19.3
			4.4%	7.9%	7.9%						
7	Top Flange	SA-182 Type FXM19	4.5	6.5	6.5	64.9	92.7	92.7	42.0	92.7	30.9
			6.9%	7.0%	7.0%						
8	Bottom Flange	SA-182 Type FXM19	21.1	51.7	51.7	64.9	92.7	92.7	42.0	92.7	30.9
			32.5%	55.8%	55.8%						
9	End Cap	SA-240 Type 304	0.4	0.6	0.6	45.6	65.1	65.1	21.6	65.1	19.3
			0.8%	0.9%	0.9%						
10	Tube	SA-240 Type 304	6.1	6.8	6.8	45.6	65.1	65.1	21.6	65.1	19.3
			13.3%	10.5%	10.5%						
11	Gamma Shielding Cap	SA-240 Type 304	1.7	3.5	3.5	45.6	65.1	65.1	21.6	65.1	19.3
			3.7%	5.4%	5.4%						

Table 2.13.1-42
HAC Stress Results-Load Combination 28

#	Load Case 28		HAC – 30 ft End Drop on Bottom End [95g, External Pressure 25 psig]								
			Max Stress [ksi] Stress Ratio			Allowable [ksi]			Material Properties [ksi]		
			PM	PL	PL+PB	PM	PL	PL+PB	Sy	Su	Sm
1	Outer Shell	SA-240 XM19	22.7	26.2	26.2	64.9	92.7	92.7	42.0	92.7	30.9
			35.0%	28.2%	28.2%						
2	Inner Shell	SA-240 XM19	17.0	19.5	19.5	64.9	92.7	92.7	42.0	92.7	30.9
			26.1%	21.1%	21.1%						
3	Bottom Plug	SA-240 Type 304	5.9	9.9	9.9	45.6	65.1	65.1	21.6	65.1	19.3
			12.9%	15.3%	15.3%						
4	Bushing	SA-240 Type 304	2.6	5.5	5.5	45.6	65.1	65.1	21.6	65.1	19.3
			5.6%	8.4%	8.4%						
5	Lead Cap, Bottom	SA-240 Type 304	14.3	24.4	24.4	45.6	65.1	65.1	21.6	65.1	19.3
			31.3%	37.5%	37.5%						
6	Lid	SA-182 Type F304	2.4	6.3	6.3	45.6	65.1	65.1	21.6	65.1	19.3
			5.2%	9.6%	9.6%						
7	Top Flange	SA-182 Type FXM19	4.6	6.7	6.7	64.9	92.7	92.7	42.0	92.7	30.9
			7.1%	7.3%	7.3%						
8	Bottom Flange	SA-182 Type FXM19	21.2	50.9	50.9	64.9	92.7	92.7	42.0	92.7	30.9
			32.6%	55.0%	55.0%						
9	End Cap	SA-240 Type 304	0.0	0.1	0.1	45.6	65.1	65.1	21.6	65.1	19.3
			0.1%	0.1%	0.1%						
10	Tube	SA-240 Type 304	5.9	6.7	6.7	45.6	65.1	65.1	21.6	65.1	19.3
			13.0%	10.2%	10.2%						
11	Gamma Shielding Cap	SA-240 Type 304	2.0	4.0	4.0	45.6	65.1	65.1	21.6	65.1	19.3
			4.3%	6.2%	6.2%						

Table 2.13.1-43
HAC Stress Results-Load Combination 29

#	Load Case 29		HAC – 30 ft End Drop on Lid End [95g, Internal Pressure 30 psig]								
			Max Stress [ksi] Stress Ratio			Allowable [ksi]			Material Properties [ksi]		
			PM	PL	PL+PB	PM	PL	PL+PB	Sy	Su	Sm
1	Outer Shell	SA-240 XM19	23.6	30.2	30.2	64.9	92.7	92.7	42.0	92.7	30.9
			36.4%	32.6%	32.6%						
2	Inner Shell	SA-240 XM19	16.9	21.2	21.2	64.9	92.7	92.7	42.0	92.7	30.9
			26.1%	22.9%	22.9%						
3	Bottom Plug	SA-240 Type 304	0.7	2.3	2.3	45.6	65.1	65.1	21.6	65.1	19.3
			1.4%	3.5%	3.5%						
4	Bushing	SA-240 Type 304	0.2	2.2	2.2	45.6	65.1	65.1	21.6	65.1	19.3
			0.5%	3.4%	3.4%						
5	Lead Cap, Bottom	SA-240 Type 304	0.7	2.4	2.4	45.6	65.1	65.1	21.6	65.1	19.3
			1.6%	3.7%	3.7%						
6	Lid	SA-182 Type F304	15.9	44.6	44.6	45.6	65.1	65.1	21.6	65.1	19.3
			34.9%	68.5%	68.5%						
7	Top Flange	SA-182 Type FXM19	21.4	28.1	28.1	64.9	92.7	92.7	42.0	92.7	30.9
			33.0%	30.4%	30.4%						
8	Bottom Flange	SA-182 Type FXM19	4.5	5.9	5.9	64.9	92.7	92.7	42.0	92.7	30.9
			6.9%	6.4%	6.4%						
9	End Cap	SA-240 Type 304	1.2	1.9	1.9	45.6	65.1	65.1	21.6	65.1	19.3
			2.7%	2.9%	2.9%						
10	Tube	SA-240 Type 304	2.1	3.0	3.0	45.6	65.1	65.1	21.6	65.1	19.3
			4.5%	4.7%	4.7%						
11	Gamma Shielding Cap	SA-240 Type 304	14.0	21.4	21.4	45.6	65.1	65.1	21.6	65.1	19.3
			30.8%	32.8%	32.8%						

Table 2.13.1-44
HAC Stress Results-Load Combination 30

#	Load Case 30		HAC – 30 ft End Drop on Lid End [95g, External Pressure 25 psig]								
			Max Stress [ksi] Stress Ratio			Allowable [ksi]			Material Properties [ksi]		
			PM	PL	PL+PB	PM	PL	PL+PB	Sy	Su	Sm
1	Outer Shell	SA-240 XM19	23.6	30.3	30.3	64.9	92.7	92.7	42.0	92.7	30.9
			36.4%	32.7%	32.7%						
2	Inner Shell	SA-240 XM19	17.1	21.4	21.4	64.9	92.7	92.7	42.0	92.7	30.9
			26.3%	23.1%	23.1%						
3	Bottom Plug	SA-240 Type 304	0.7	2.6	2.6	45.6	65.1	65.1	21.6	65.1	19.3
			1.5%	4.0%	4.0%						
4	Bushing	SA-240 Type 304	0.3	2.5	2.5	45.6	65.1	65.1	21.6	65.1	19.3
			0.6%	3.9%	3.9%						
5	Lead Cap, Bottom	SA-240 Type 304	0.9	2.8	2.8	45.6	65.1	65.1	21.6	65.1	19.3
			1.9%	4.3%	4.3%						
6	Lid	SA-182 Type F304	15.7	44.0	44.0	45.6	65.1	65.1	21.6	65.1	19.3
			34.5%	67.6%	67.6%						
7	Top Flange	SA-182 Type FXM19	21.4	28.3	28.3	64.9	92.7	92.7	42.0	92.7	30.9
			33.1%	30.6%	30.6%						
8	Bottom Flange	SA-182 Type FXM19	4.7	7.4	7.4	64.9	92.7	92.7	42.0	92.7	30.9
			7.2%	8.0%	8.0%						
9	End Cap	SA-240 Type 304	1.5	2.4	2.4	45.6	65.1	65.1	21.6	65.1	19.3
			3.3%	3.8%	3.8%						
10	Tube	SA-240 Type 304	2.3	3.4	3.4	45.6	65.1	65.1	21.6	65.1	19.3
			5.1%	5.3%	5.3%						
11	Gamma Shielding Cap	SA-240 Type 304	13.7	20.9	20.9	45.6	65.1	65.1	21.6	65.1	19.3
			30.1%	32.2%	32.2%						

Table 2.13.1-45
HAC Stress Results-Load Combination 31(Elastic Analysis)

#	Load Case 31		HAC – 30 ft Side Drop [75g, Internal Pressure 30 psig]								
			Max Stress [ksi] Stress Ratio			Allowable [ksi]			Material Properties [ksi]		
			PM	PL	PL+PB	PM	PL	PL+PB	Sy	Su	Sm
1	Outer Shell[1]	SA-240 XM19	69.6	74.0	74.0	64.9	92.7	92.7	42.0	92.7	30.9
			107.2%	79.8%	79.8%						
2	Inner Shell	SA-240 XM19	48.6	52.1	52.1	64.9	92.7	92.7	42.0	92.7	30.9
			75.0%	56.2%	56.2%						
3	Bottom Plug	SA-240 Type 304	1.0	6.1	6.1	45.6	65.1	65.1	21.6	65.1	19.3
			2.3%	9.4%	9.4%						
4	Bushing	SA-240 Type 304	0.4	0.6	0.6	45.6	65.1	65.1	21.6	65.1	19.3
			0.9%	0.8%	0.8%						
5	Lead Cap, Bottom	SA-240 Type 304	16.2	21.1	21.1	45.6	65.1	65.1	21.6	65.1	19.3
			35.5%	32.4%	32.4%						
6	Lid	SA-182 Type F304	23.9	32.9	32.9	45.6	65.1	65.1	21.6	65.1	19.3
			52.5%	50.6%	50.6%						
7	Top Flange	SA-182 Type FXM19	36.4	43.0	43.0	64.9	92.7	92.7	42.0	92.7	30.9
			56.1%	46.5%	46.5%						
8	Bottom Flange	SA-182 Type FXM19	28.6	49.9	49.9	64.9	92.7	92.7	42.0	92.7	30.9
			44.1%	53.9%	53.9%						
9	End Cap	SA-240 Type 304	0.2	0.2	0.2	45.6	65.1	65.1	21.6	65.1	19.3
			0.4%	0.4%	0.4%						
10	Tube	SA-240 Type 304	2.8	4.4	4.4	45.6	65.1	65.1	21.6	65.1	19.3
			6.1%	6.7%	6.7%						
11	Gamma Shielding Cap	SA-240 Type 304	18.2	30.7	30.7	45.6	65.1	65.1	21.6	65.1	19.3
			39.8%	47.2%	47.2%						

Notes:

1. Outer shield shell exceeds elastic code allowables. This component is a non-containment boundary and is qualified using plastic analysis criteria. Results are shown on Table 2.13.1-46.

Table 2.13.1-46
HAC Stress Results-Load Combination 31(Plastic Analysis)

#	Load Case 31		HAC – 30 ft Side Drop (Plastic Analysis) [75g, Internal Pressure 30 psig]								
			Max Stress [ksi] Stress Ratio			Allowable [ksi]			Material Properties [ksi]		
			PM	PL	PL+PB	PM	PL	PL+PB	Sy	Su	Sm
1	Outer Shell	SA-240 XM19	55.0	55.4	55.4	64.9	83.4	83.4	42.0	92.7	30.9
			84.8%	66.4%	66.4%						
2	Inner Shell	SA-240 XM19	49.9	51.1	51.1	64.9	83.4	83.4	42.0	92.7	30.9
			77.0%	61.2%	61.2%						
3	Bottom Plug	SA-240 Type 304	1.1	6.3	6.3	45.6	58.6	58.6	21.6	65.1	19.3
			2.4%	10.8%	10.8%						
4	Bushing	SA-240 Type 304	0.4	0.4	0.4	45.6	58.6	58.6	21.6	65.1	19.3
			0.8%	0.6%	0.6%						
5	Lead Cap, Bottom	SA-240 Type 304	11.1	20.2	20.2	45.6	58.6	58.6	21.6	65.1	19.3
			24.4%	34.4%	34.4%						
6	Lid	SA-182 Type F304	17.8	28.2	28.2	45.6	58.6	58.6	21.6	65.1	19.3
			39.0%	48.1%	48.1%						
7	Top Flange	SA-182 Type FXM19	27.6	32.4	32.4	64.9	92.7	92.7	42.0	92.7	30.9
			42.6%	38.8%	38.8%						
8	Bottom Flange	SA-182 Type FXM19	25.9	31.0	31.0	64.9	92.7	92.7	42.0	92.7	30.9
			39.9%	37.2%	37.2%						
9	End Cap	SA-240 Type 304	0.1	0.3	0.3	45.6	58.6	58.6	21.6	65.1	19.3
			0.3%	0.4%	0.4%						
10	Tube	SA-240 Type 304	2.8	4.8	4.8	45.6	58.6	58.6	21.6	65.1	19.3
			6.2%	8.2%	8.2%						
11	Gamma Shielding Cap	SA-240 Type 304	6.4	16.6	16.6	45.6	58.6	58.6	21.6	65.1	19.3
			14.1%	28.3%	28.3%						

Table 2.13.1-47
HAC Stress Results-Load Combination 32 (Elastic Analysis)

#	Load Case 32		HAC – 30 ft Side Drop [75g, External Pressure 25 psig]								
			Max Stress [ksi] Stress Ratio			Allowable [ksi]			Material Properties [ksi]		
			PM	PL	PL+PB	PM	PL	PL+PB	Sy	Su	Sm
1	Outer Shell(1)	SA-240 XM19	69.4	73.8	73.8	64.9	92.7	92.7	42.0	92.7	30.9
			106.9%	79.6%	79.6%						
2	Inner Shell	SA-240 XM19	48.7	51.9	51.9	64.9	92.7	92.7	42.0	92.7	30.9
			75.2%	56.0%	56.0%						
3	Bottom Plug	SA-240 Type 304	1.1	6.2	6.2	45.6	65.1	65.1	21.6	65.1	19.3
			2.4%	9.6%	9.6%						
4	Bushing	SA-240 Type 304	0.4	0.4	0.4	45.6	65.1	65.1	21.6	65.1	19.3
			0.9%	0.6%	0.6%						
5	Lead Cap, Bottom	SA-240 Type 304	16.2	21.1	21.1	45.6	65.1	65.1	21.6	65.1	19.3
			35.6%	32.5%	32.5%						
6	Lid	SA-182 Type F304	24.1	33.9	33.9	45.6	65.1	65.1	21.6	65.1	19.3
			52.9%	52.0%	52.0%						
7	Top Flange	SA-182 Type FXM19	36.2	43.0	43.0	64.9	92.7	92.7	42.0	92.7	30.9
			55.8%	46.4%	46.4%						
8	Bottom Flange	SA-182 Type FXM19	28.5	49.7	49.7	64.9	92.7	92.7	42.0	92.7	30.9
			44.0%	53.6%	53.6%						
9	End Cap	SA-240 Type 304	0.1	0.2	0.2	45.6	65.1	65.1	21.6	65.1	19.3
			0.3%	0.3%	0.3%						
10	Tube	SA-240 Type 304	2.7	4.5	4.5	45.6	65.1	65.1	21.6	65.1	19.3
			6.0%	6.9%	6.9%						
11	Gamma Shielding Cap	SA-240 Type 304	17.6	29.8	29.8	45.6	65.1	65.1	21.6	65.1	19.3
			38.7%	45.7%	45.7%						

Notes:
1. Outer shield shell exceeds elastic code allowables. This component is a non-containment boundary and is qualified using plastic analysis criteria. Results are shown on Table 2.13.1-48.

Table 2.13.1-48
HAC Stress Results-Load Combination 32 (Plastic Analysis)

#	Load Case 32		HAC – 30 ft Side Drop (Plastic Analysis) [75g, External Pressure 25 psig]								
			Max Stress [ksi] Stress Ratio			Allowable [ksi]			Material Properties [ksi]		
			PM	PL	PL+PB	PM	PL	PL+PB	Sy	Su	Sm
1	Outer Shell	SA-240 XM19	54.8	55.3	55.3	64.9	83.4	83.4	42.0	92.7	30.9
			84.6%	66.3%	66.3%						
2	Inner Shell	SA-240 XM19	50.1	51.1	51.1	64.9	83.4	83.4	42.0	92.7	30.9
			77.2%	61.3%	61.3%						
3	Bottom Plug	SA-240 Type 304	1.1	6.4	6.4	45.6	58.6	58.6	21.6	65.1	19.3
			2.5%	11.0%	11.0%						
4	Bushing	SA-240 Type 304	0.4	0.3	0.3	45.6	58.6	58.6	21.6	65.1	19.3
			0.9%	0.6%	0.6%						
5	Lead Cap, Bottom	SA-240 Type 304	11.2	20.0	20.0	45.6	58.6	58.6	21.6	65.1	19.3
			24.5%	34.2%	34.2%						
6	Lid	SA-182 Type F304	17.6	28.9	28.9	45.6	58.6	58.6	21.6	65.1	19.3
			38.7%	49.3%	49.3%						
7	Top Flange	SA-182 Type FXM19	27.5	32.2	32.2	64.9	92.7	92.7	42.0	92.7	30.9
			42.4%	38.6%	38.6%						
8	Bottom Flange	SA-182 Type FXM19	25.9	31.3	31.3	64.9	92.7	92.7	42.0	92.7	30.9
			39.9%	37.5%	37.5%						
9	End Cap	SA-240 Type 304	0.2	0.2	0.2	45.6	58.6	58.6	21.6	65.1	19.3
			0.3%	0.4%	0.4%						
10	Tube	SA-240 Type 304	2.7	4.6	4.6	45.6	58.6	58.6	21.6	65.1	19.3
			5.9%	7.8%	7.8%						
11	Gamma Shielding Cap	SA-240 Type 304	6.2	16.4	16.4	45.6	58.6	58.6	21.6	65.1	19.3
			13.6%	28.0%	28.0%						

Table 2.13.1-49
HAC Stress Results-Load Combination 33

#	Load Case 33		HAC – 30 ft CG Over Corner Drop on Bottom End [75g, Internal Pressure 30 psig]								
			Max Stress [ksi] Stress Ratio			Allowable [ksi]			Material Properties [ksi]		
			PM	PL	PL+PB	PM	PL	PL+PB	Sy	Su	Sm
1	Outer Shell	SA-240 XM19	24.7	28.2	28.2	64.9	92.7	92.7	42.0	92.7	30.9
			38.1%	30.4%	30.4%						
2	Inner Shell	SA-240 XM19	24.3	26.7	26.7	64.9	92.7	92.7	42.0	92.7	30.9
			37.5%	28.9%	28.9%						
3	Bottom Plug	SA-240 Type 304	5.2	9.0	9.0	45.6	65.1	65.1	21.6	65.1	19.3
			11.5%	13.9%	13.9%						
4	Bushing	SA-240 Type 304	2.0	4.1	4.1	45.6	65.1	65.1	21.6	65.1	19.3
			4.4%	6.3%	6.3%						
5	Lead Cap, Bottom	SA-240 Type 304	12.0	17.1	17.1	45.6	65.1	65.1	21.6	65.1	19.3
			26.4%	26.3%	26.3%						
6	Lid	SA-182 Type F304	1.9	5.8	5.8	45.6	65.1	65.1	21.6	65.1	19.3
			4.1%	8.9%	8.9%						
7	Top Flange	SA-182 Type FXM19	3.7	5.7	5.7	64.9	92.7	92.7	42.0	92.7	30.9
			5.7%	6.1%	6.1%						
8	Bottom Flange	SA-182 Type FXM19	24.6	38.7	38.7	64.9	92.7	92.7	42.0	92.7	30.9
			38.0%	41.7%	41.7%						
9	End Cap	SA-240 Type 304	0.4	0.6	0.6	45.6	65.1	65.1	21.6	65.1	19.3
			0.8%	0.9%	0.9%						
10	Tube	SA-240 Type 304	4.8	5.3	5.3	45.6	65.1	65.1	21.6	65.1	19.3
			10.6%	8.1%	8.1%						
11	Gamma Shielding Cap	SA-240 Type 304	1.2	2.5	2.5	45.6	65.1	65.1	21.6	65.1	19.3
			2.6%	3.8%	3.8%						

Table 2.13.1-50
HAC Stress Results-Load Combination 34

#	Load Case 34		HAC – 30 ft CG Over Corner Drop on Bottom End [75g, External Pressure 25 psig]								
			Max Stress [ksi] Stress Ratio			Allowable [ksi]			Material Properties [ksi]		
			PM	PL	PL+PB	PM	PL	PL+PB	Sy	Su	Sm
1	Outer Shell	SA-240 XM19	24.6	28.0	28.0	64.9	92.7	92.7	42.0	92.7	30.9
			37.9%	30.3%	30.3%						
2	Inner Shell	SA-240 XM19	24.4	26.9	26.9	64.9	92.7	92.7	42.0	92.7	30.9
			37.7%	29.0%	29.0%						
3	Bottom Plug	SA-240 Type 304	5.2	8.8	8.8	45.6	65.1	65.1	21.6	65.1	19.3
			11.4%	13.6%	13.6%						
4	Bushing	SA-240 Type 304	2.0	3.8	3.8	45.6	65.1	65.1	21.6	65.1	19.3
			4.3%	5.9%	5.9%						
5	Lead Cap, Bottom	SA-240 Type 304	11.9	17.2	17.2	45.6	65.1	65.1	21.6	65.1	19.3
			26.2%	26.4%	26.4%						
6	Lid	SA-182 Type F304	2.2	7.0	7.0	45.6	65.1	65.1	21.6	65.1	19.3
			4.9%	10.7%	10.7%						
7	Top Flange	SA-182 Type FXM19	3.9	5.9	5.9	64.9	92.7	92.7	42.0	92.7	30.9
			6.0%	6.4%	6.4%						
8	Bottom Flange	SA-182 Type FXM19	24.8	38.0	38.0	64.9	92.7	92.7	42.0	92.7	30.9
			38.2%	41.1%	41.1%						
9	End Cap	SA-240 Type 304	0.1	0.1	0.1	45.6	65.1	65.1	21.6	65.1	19.3
			0.2%	0.2%	0.2%						
10	Tube	SA-240 Type 304	4.7	5.1	5.1	45.6	65.1	65.1	21.6	65.1	19.3
			10.3%	7.8%	7.8%						
11	Gamma Shielding Cap	SA-240 Type 304	1.5	3.2	3.2	45.6	65.1	65.1	21.6	65.1	19.3
			3.3%	4.9%	4.9%						

Table 2.13.1-51
HAC Stress Results-Load Combination 35

#	Load Case 35		HAC – 30 ft CG Over Corner Drop on Lid End [75g, Internal Pressure 30 psig]								
			Max Stress [ksi] Stress Ratio			Allowable [ksi]			Material Properties [ksi]		
			PM	PL	PL+PB	PM	PL	PL+PB	Sy	Su	Sm
1	Outer Shell	SA-240 XM19	24.2	27.4	27.4	64.9	92.7	92.7	42.0	92.7	30.9
			37.3%	29.6%	29.6%						
2	Inner Shell	SA-240 XM19	25.9	31.1	31.1	64.9	92.7	92.7	42.0	92.7	30.9
			40.0%	33.6%	33.6%						
3	Bottom Plug	SA-240 Type 304	0.7	2.4	2.4	45.6	65.1	65.1	21.6	65.1	19.3
			1.5%	3.6%	3.6%						
4	Bushing	SA-240 Type 304	0.2	1.6	1.6	45.6	65.1	65.1	21.6	65.1	19.3
			0.5%	2.5%	2.5%						
5	Lead Cap, Bottom	SA-240 Type 304	0.6	2.0	2.0	45.6	65.1	65.1	21.6	65.1	19.3
			1.3%	3.0%	3.0%						
6	Lid	SA-182 Type F304	15.6	37.2	37.2	45.6	65.1	65.1	21.6	65.1	19.3
			34.3%	57.1%	57.1%						
7	Top Flange	SA-182 Type FXM19	26.2	40.6	40.6	64.9	92.7	92.7	42.0	92.7	30.9
			40.5%	43.8%	43.8%						
8	Bottom Flange	SA-182 Type FXM19	3.8	5.7	5.7	64.9	92.7	92.7	42.0	92.7	30.9
			5.9%	6.2%	6.2%						
9	End Cap	SA-240 Type 304	0.9	1.3	1.3	45.6	65.1	65.1	21.6	65.1	19.3
			1.9%	2.0%	2.0%						
10	Tube	SA-240 Type 304	1.8	2.6	2.6	45.6	65.1	65.1	21.6	65.1	19.3
			4.0%	3.9%	3.9%						
11	Gamma Shielding Cap	SA-240 Type 304	18.6	23.4	23.4	45.6	65.1	65.1	21.6	65.1	19.3
			40.7%	36.0%	36.0%						

Table 2.13.1-52
HAC Stress Results-Load Combination 36

#	Load Case 36		HAC – 30 ft CG Over Corner Drop on Lid End [75g, External Pressure 25 psig]								
			Max Stress [ksi] Stress Ratio			Allowable [ksi]			Material Properties [ksi]		
			PM	PL	PL+PB	PM	PL	PL+PB	Sy	Su	Sm
1	Outer Shell	SA-240 XM19	24.0	27.2	27.2	64.9	92.7	92.7	42.0	92.7	30.9
			37.0%	29.4%	29.4%						
2	Inner Shell	SA-240 XM19	26.1	31.3	31.3	64.9	92.7	92.7	42.0	92.7	30.9
			40.2%	33.7%	33.7%						
3	Bottom Plug	SA-240 Type 304	0.7	2.5	2.5	45.6	65.1	65.1	21.6	65.1	19.3
			1.6%	3.8%	3.8%						
4	Bushing	SA-240 Type 304	0.3	2.0	2.0	45.6	65.1	65.1	21.6	65.1	19.3
			0.6%	3.0%	3.0%						
5	Lead Cap, Bottom	SA-240 Type 304	0.7	2.5	2.5	45.6	65.1	65.1	21.6	65.1	19.3
			1.6%	3.8%	3.8%						
6	Lid	SA-182 Type F304	15.6	36.4	36.4	45.6	65.1	65.1	21.6	65.1	19.3
			34.3%	55.9%	55.9%						
7	Top Flange	SA-182 Type FXM19	26.4	40.7	40.7	64.9	92.7	92.7	42.0	92.7	30.9
			40.6%	44.0%	44.0%						
8	Bottom Flange	SA-182 Type FXM19	4.0	7.7	7.7	64.9	92.7	92.7	42.0	92.7	30.9
			6.1%	8.3%	8.3%						
9	End Cap	SA-240 Type 304	1.1	1.8	1.8	45.6	65.1	65.1	21.6	65.1	19.3
			2.5%	2.8%	2.8%						
10	Tube	SA-240 Type 304	2.1	2.8	2.8	45.6	65.1	65.1	21.6	65.1	19.3
			4.6%	4.3%	4.3%						
11	Gamma Shielding Cap	SA-240 Type 304	18.0	23.0	23.0	45.6	65.1	65.1	21.6	65.1	19.3
			39.5%	35.3%	35.3%						

Table 2.13.1-53
HAC Stress Results-Load Combination 37

#	Load Case 37		HAC – 30 ft Slap Down Drop [130g, Internal Pressure 30 psig]								
			Max Stress [ksi] Stress Ratio			Allowable [ksi]			Material Properties [ksi]		
			PM	PL	PL+PB	PM	PL	PL+PB	Sy	Su	Sm
1	Outer Shell	SA-240 XM19	63.6	88.0	88.0	64.9	92.7	92.7	42.0	92.7	30.9
			98.0%	95.0%	95.0%						
2	Inner Shell	SA-240 XM19	48.5	53.0	53.0	64.9	92.7	92.7	42.0	92.7	30.9
			74.7%	57.2%	57.2%						
3	Bottom Plug	SA-240 Type 304	1.8	10.7	10.7	45.6	65.1	65.1	21.6	65.1	19.3
			3.9%	16.4%	16.4%						
4	Bushing	SA-240 Type 304	0.7	0.8	0.8	45.6	65.1	65.1	21.6	65.1	19.3
			1.6%	1.2%	1.2%						
5	Lead Cap, Bottom	SA-240 Type 304	28.3	37.2	37.2	45.6	65.1	65.1	21.6	65.1	19.3
			62.1%	57.2%	57.2%						
6	Lid	SA-182 Type F304	42.9	59.8	59.8	45.6	65.1	65.1	21.6	65.1	19.3
			94.1%	91.9%	91.9%						
7	Top Flange	SA-182 Type FXM19	63.2	74.8	74.8	64.9	92.7	92.7	42.0	92.7	30.9
			97.4%	80.8%	80.8%						
8	Bottom Flange	SA-182 Type FXM19	50.9	87.7	87.7	64.9	92.7	92.7	42.0	92.7	30.9
			78.6%	94.7%	94.7%						
9	End Cap	SA-240 Type 304	0.2	0.2	0.2	45.6	65.1	65.1	21.6	65.1	19.3
			0.4%	0.3%	0.3%						
10	Tube	SA-240 Type 304	4.7	7.7	7.7	45.6	65.1	65.1	21.6	65.1	19.3
			10.4%	11.9%	11.9%						
11	Gamma Shielding Cap	SA-240 Type 304	31.4	53.5	53.5	45.6	65.1	65.1	21.6	65.1	19.3
			68.9%	82.2%	82.2%						

Table 2.13.1-54
HAC Stress Results-Load Combination 41

#	Load Case 41		HAC - Immersion [290 psi]								
			Max Stress [ksi] Stress Ratio			Allowable [ksi]			Material Properties [ksi]		
			PM	PL	PL+PB	PM	PL	PL+PB	Sy	Su	Sm
1	Outer Shell	SA-240 XM19	1.6	2.0	2.0	64.9	92.7	92.7	42.0	92.7	30.9
			2.4%	2.1%	2.1%						
2	Inner Shell	SA-240 XM19	1.2	1.3	1.3	64.9	92.7	92.7	42.0	92.7	30.9
			1.9%	1.4%	1.4%						
3	Bottom Plug	SA-240 Type 304	0.4	1.3	1.3	45.6	65.1	65.1	21.6	65.1	19.3
			0.8%	2.0%	2.0%						
4	Bushing	SA-240 Type 304	0.3	1.3	1.3	45.6	65.1	65.1	21.6	65.1	19.3
			0.7%	2.0%	2.0%						
5	Lead Cap, Bottom	SA-240 Type 304	0.5	1.7	1.7	45.6	65.1	65.1	21.6	65.1	19.3
			1.1%	2.6%	2.6%						
6	Lid	SA-182 Type F304	1.1	3.6	3.6	45.6	65.1	65.1	21.6	65.1	19.3
			2.3%	5.5%	5.5%						
7	Top Flange	SA-182 Type FXM19	1.0	2.3	2.3	64.9	92.7	92.7	42.0	92.7	30.9
			1.6%	2.5%	2.5%						
8	Bottom Flange	SA-182 Type FXM19	1.0	3.0	3.0	64.9	92.7	92.7	42.0	92.7	30.9
			1.5%	3.2%	3.2%						
9	End Cap	SA-240 Type 304	0.0	0.1	0.1	45.6	65.1	65.1	21.6	65.1	19.3
			0.1%	0.1%	0.1%						
10	Tube	SA-240 Type 304	0.9	1.3	1.3	45.6	65.1	65.1	21.6	65.1	19.3
			1.9%	2.0%	2.0%						
11	Gamma Shielding Cap	SA-240 Type 304	0.4	1.2	1.2	45.6	65.1	65.1	21.6	65.1	19.3
			0.9%	1.9%	1.9%						

Table 2.13.1-55
HAC Stress Results-Load Combination 42

#	Load Case 42		HAC - Fire Accident								
			Max Stress [ksi] Stress Ratio			Allowable [ksi]			Material Properties [ksi]		
			PM	PL	PL+PB	PM	PL	PL+PB	Sy	Su	Sm
1	Outer Shell	SA-240 XM19	1.0	1.0	1.0	61.2	87.4	87.4	37.2	87.4	29.1
			1.6%	1.2%	1.2%						
2	Inner Shell	SA-240 XM19	1.1	1.1	1.1	61.2	87.4	87.4	37.2	87.4	29.1
			1.8%	1.3%	1.3%						
3	Bottom Plug	SA-240 Type 304	0.2	0.6	0.6	39.5	59.2	59.2	18.2	63.4	16.4
			0.6%	1.0%	1.0%						
4	Bushing	SA-240 Type 304	0.1	0.5	0.5	39.5	59.2	59.2	18.2	63.4	16.4
			0.2%	0.9%	0.9%						
5	Lead Cap, Bottom	SA-240 Type 304	0.4	0.8	0.8	39.5	59.2	59.2	18.2	63.4	16.4
			1.0%	1.4%	1.4%						
6	Lid	SA-182 Type F304	1.0	3.0	3.0	39.5	59.2	59.2	18.2	63.4	16.4
			2.5%	5.0%	5.0%						
7	Top Flange	SA-182 Type FXM19	0.9	1.0	1.0	61.2	87.4	87.4	37.2	87.4	29.1
			1.5%	1.1%	1.1%						
8	Bottom Flange	SA-182 Type FXM19	0.7	2.4	2.4	61.2	87.4	87.4	37.2	87.4	29.1
			1.2%	2.8%	2.8%						
9	End Cap	SA-240 Type 304	1.0	1.7	1.7	39.5	59.2	59.2	18.2	63.4	16.4
			2.7%	2.9%	2.9%						
10	Tube	SA-240 Type 304	0.6	0.9	0.9	39.5	59.2	59.2	18.2	63.4	16.4
			1.5%	1.5%	1.5%						
11	Gamma Shielding Cap	SA-240 Type 304	1.5	2.3	2.3	39.5	59.2	59.2	18.2	63.4	16.4
			3.9%	3.8%	3.8%						

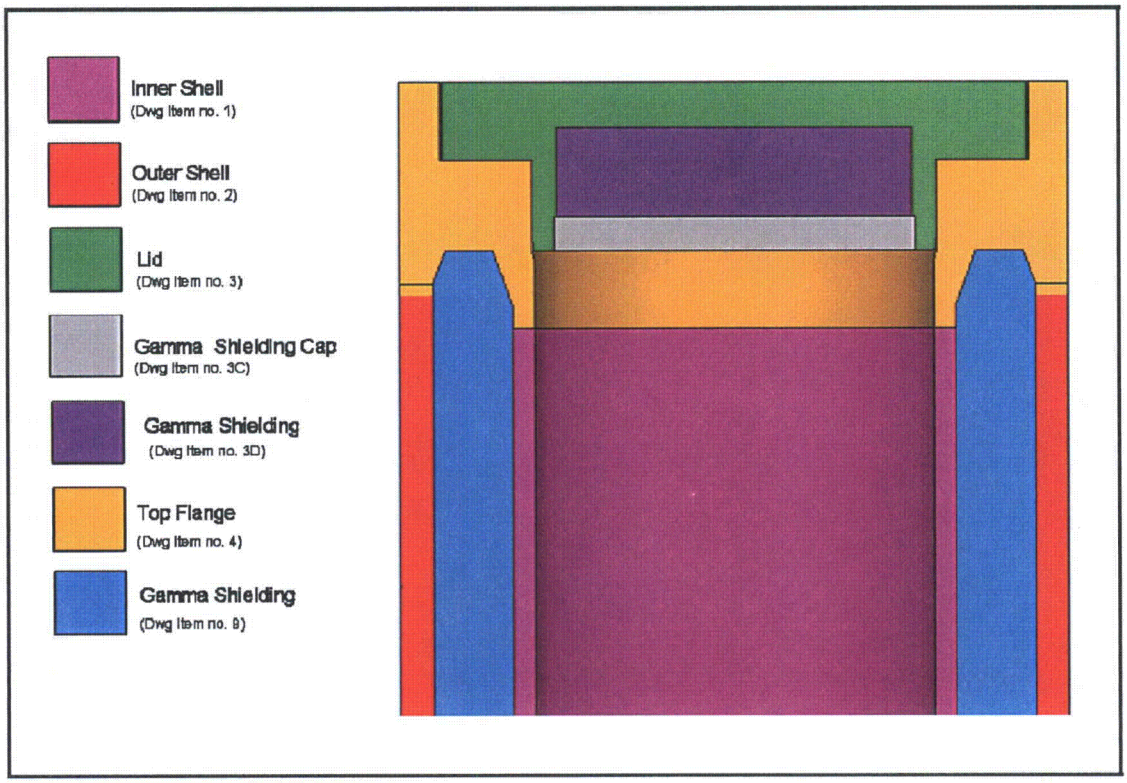

Figure 2.13.1-1
Schematic of the TN-LC Cask - FEA Model-Top Assembly

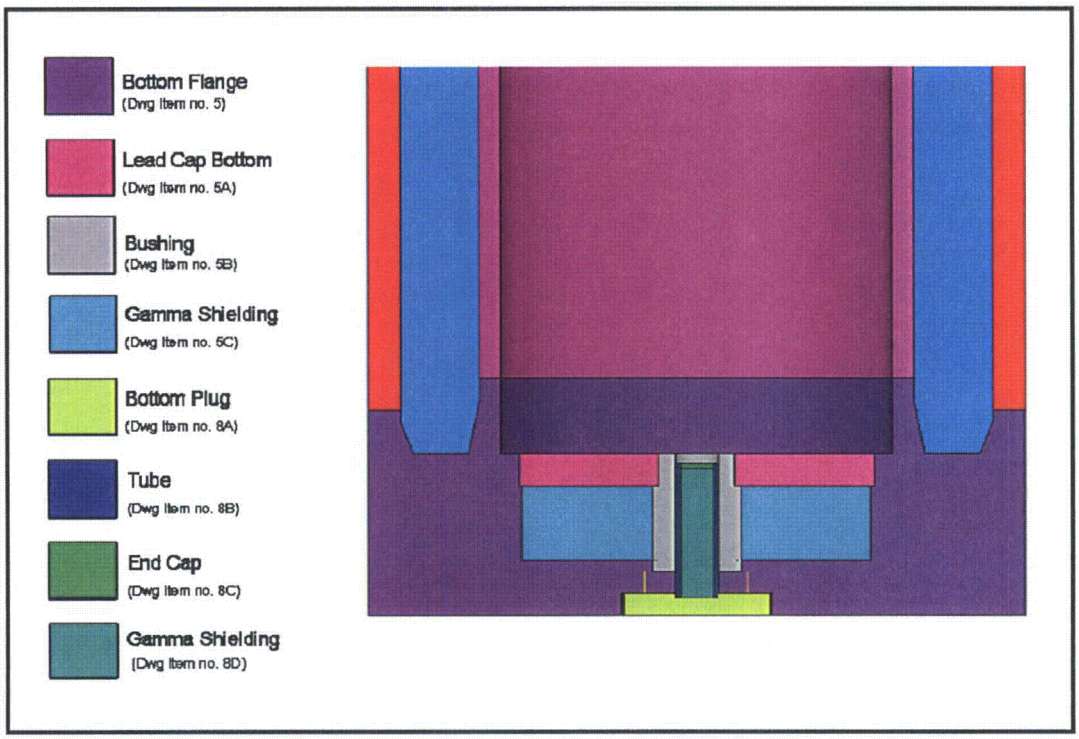

Figure 2.13.1-2
Schematic of the TN-LC Cask - FEA Model-Bottom Assembly

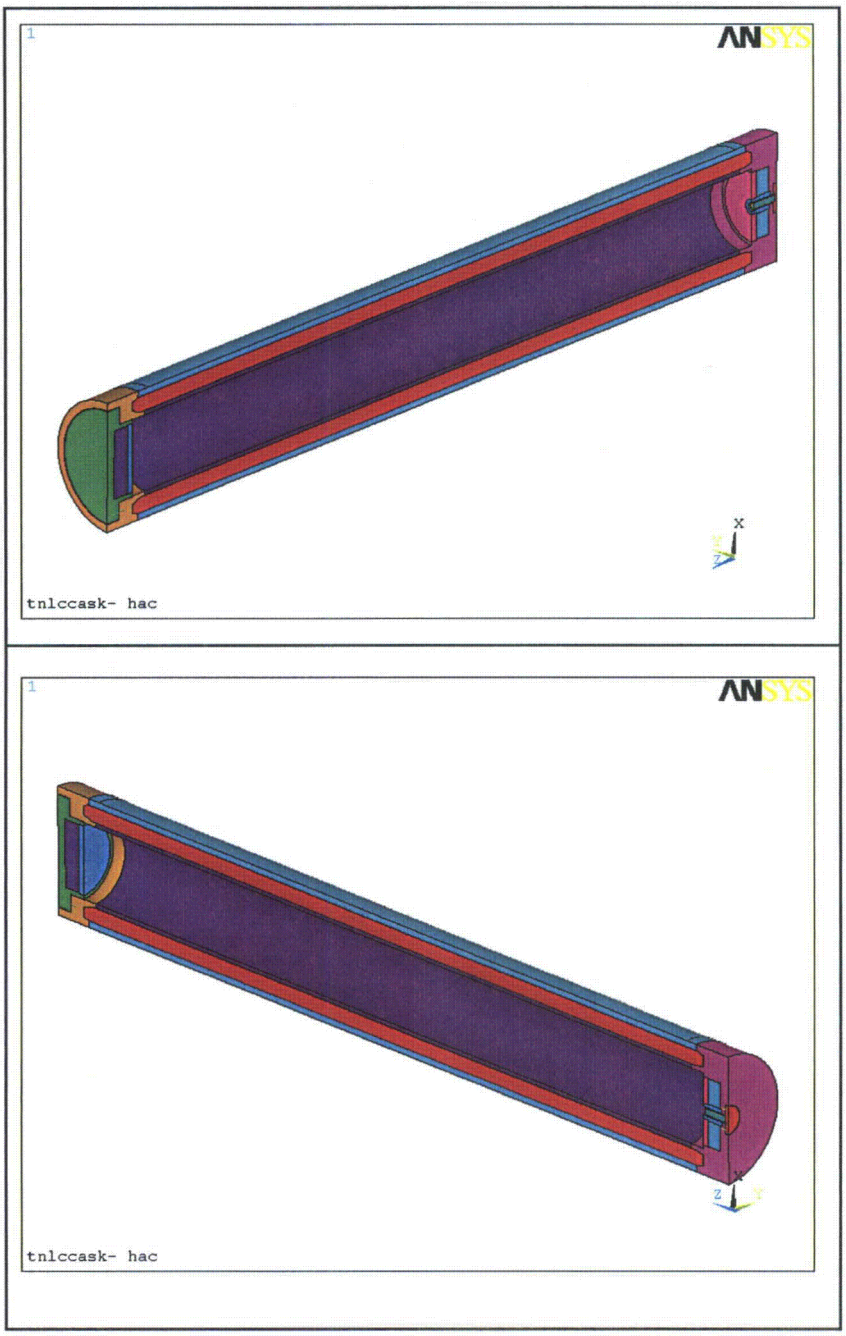

Figure 2.13.1-3
TN-LC Cask 3D Model – Overall View

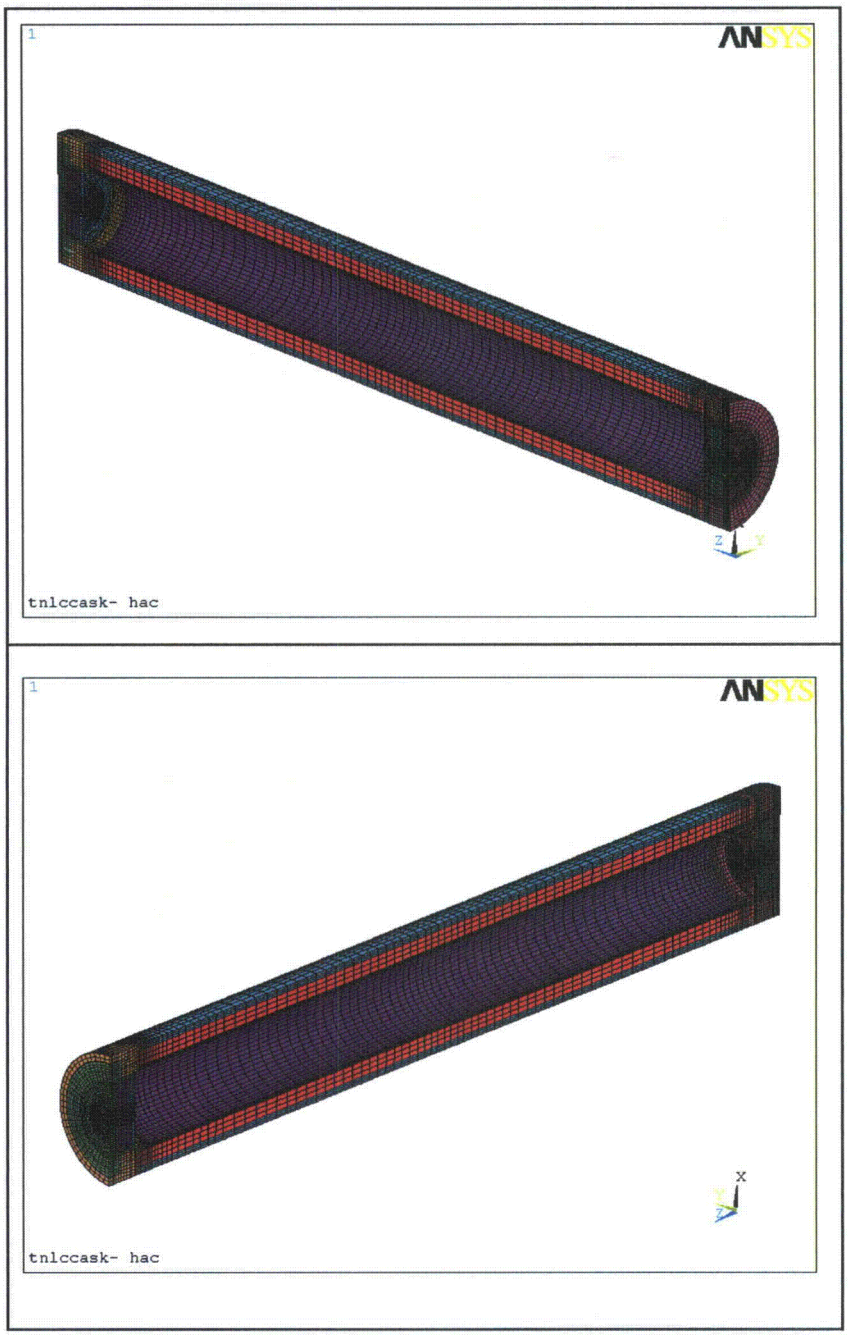

Figure 2.13.1-4
TN-LC Cask 3D Model-Mesh

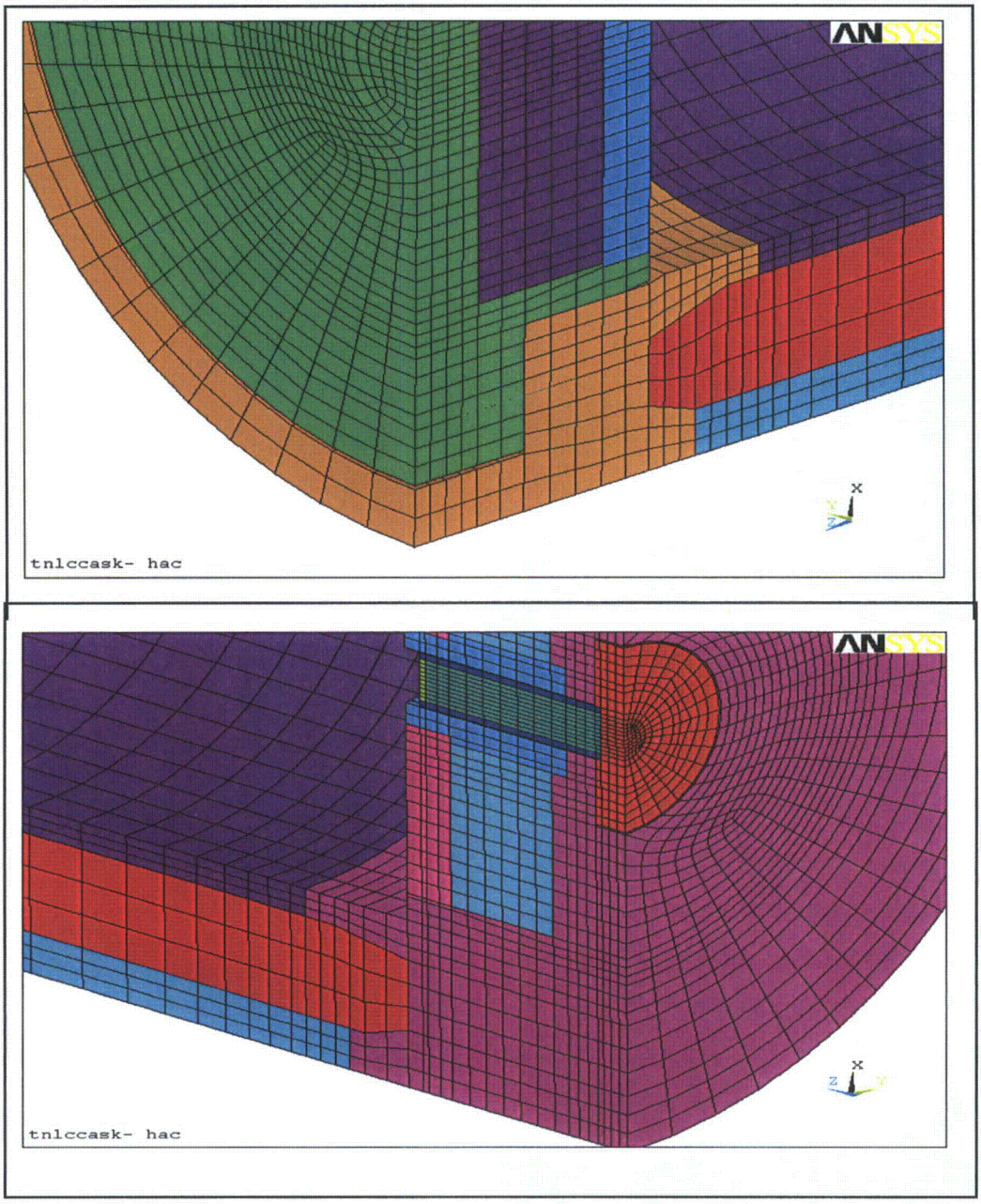

Figure 2.13.1-5
TN-LC Cask 3D Model – Mesh – Top and Bottom Part

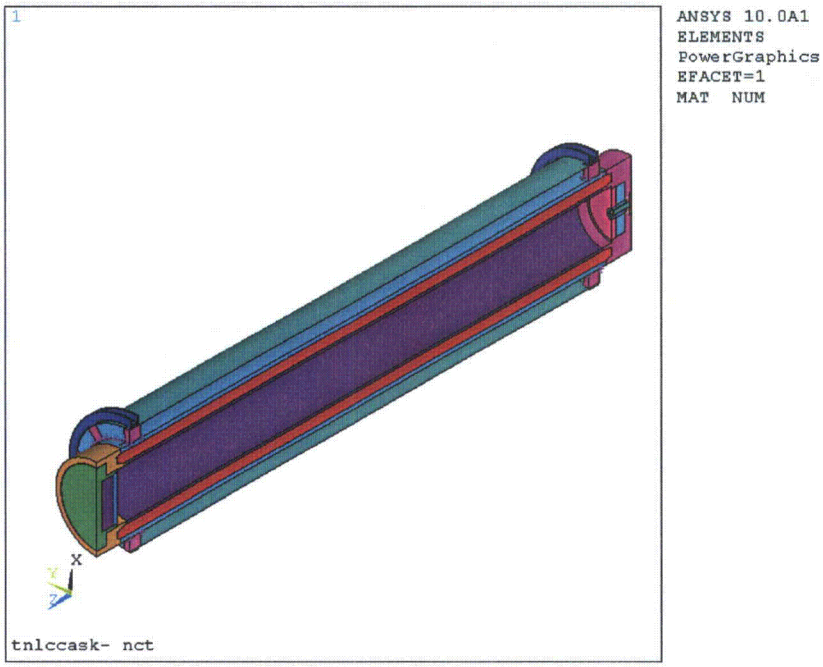

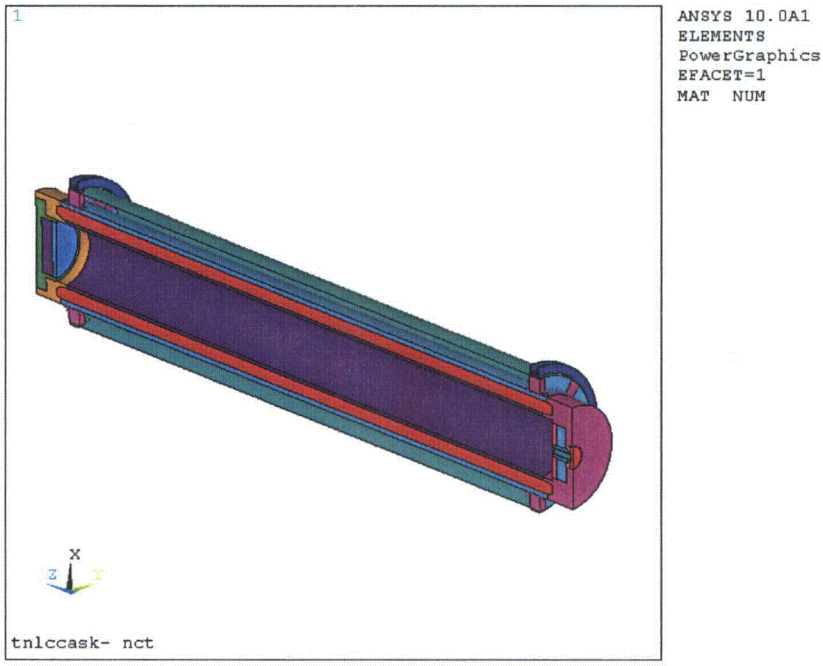

Figure 2.13.1-6
TN-LC Cask 3D Model with Saddles and Straps

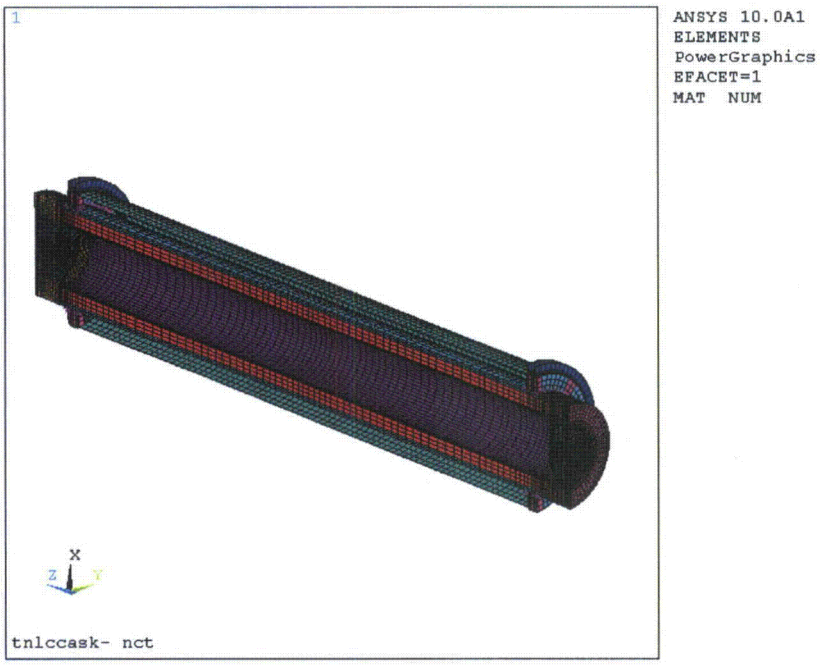

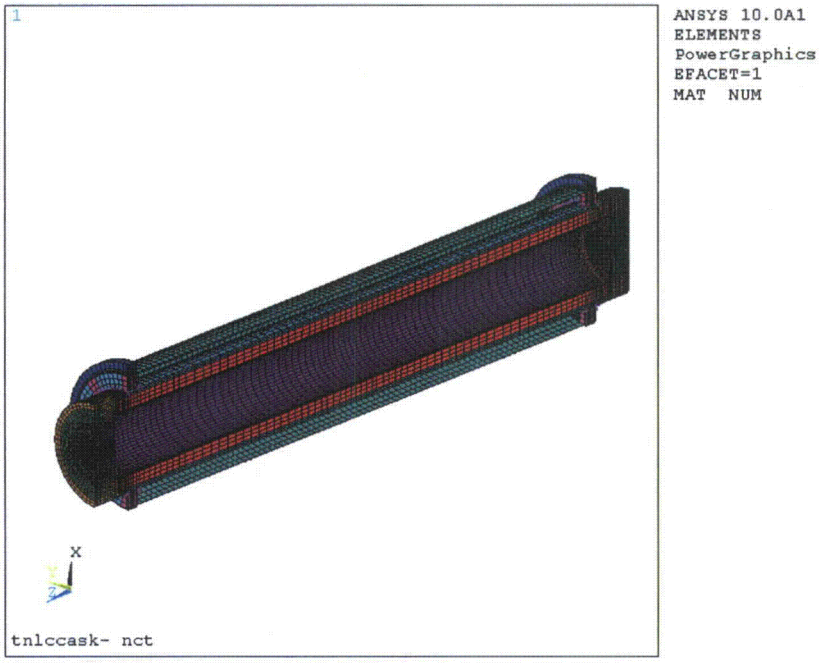

Figure 2.13.1-7
TN-LC Cask 3D Model with Saddles and Straps (Mesh)

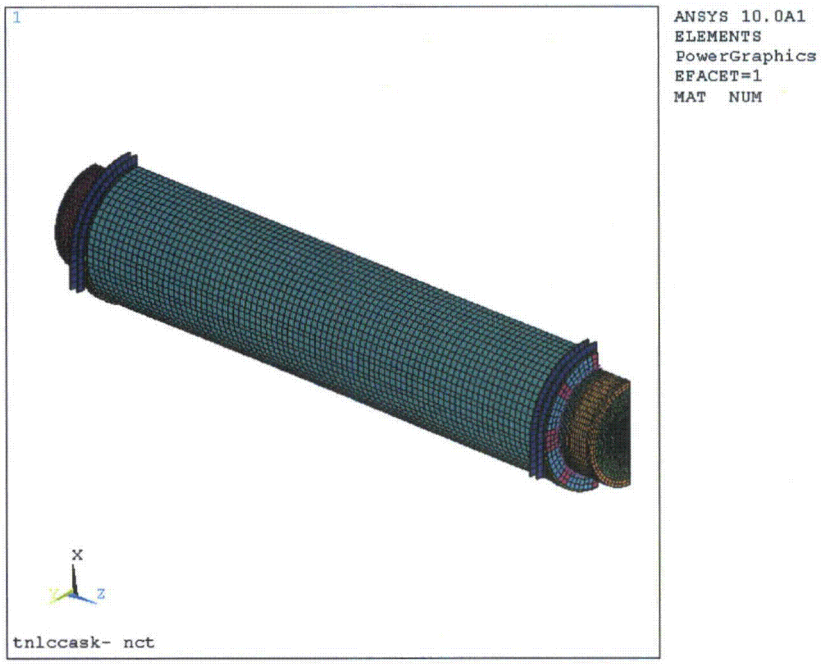

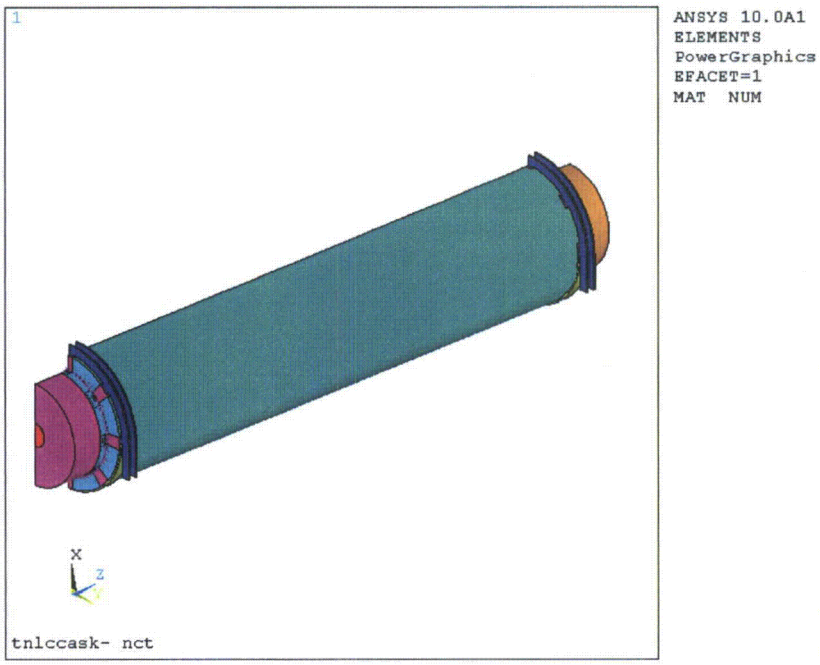

Figure 2.13.1-8
TN-LC Cask 3D Model with Saddles and Straps (Model & Mesh)

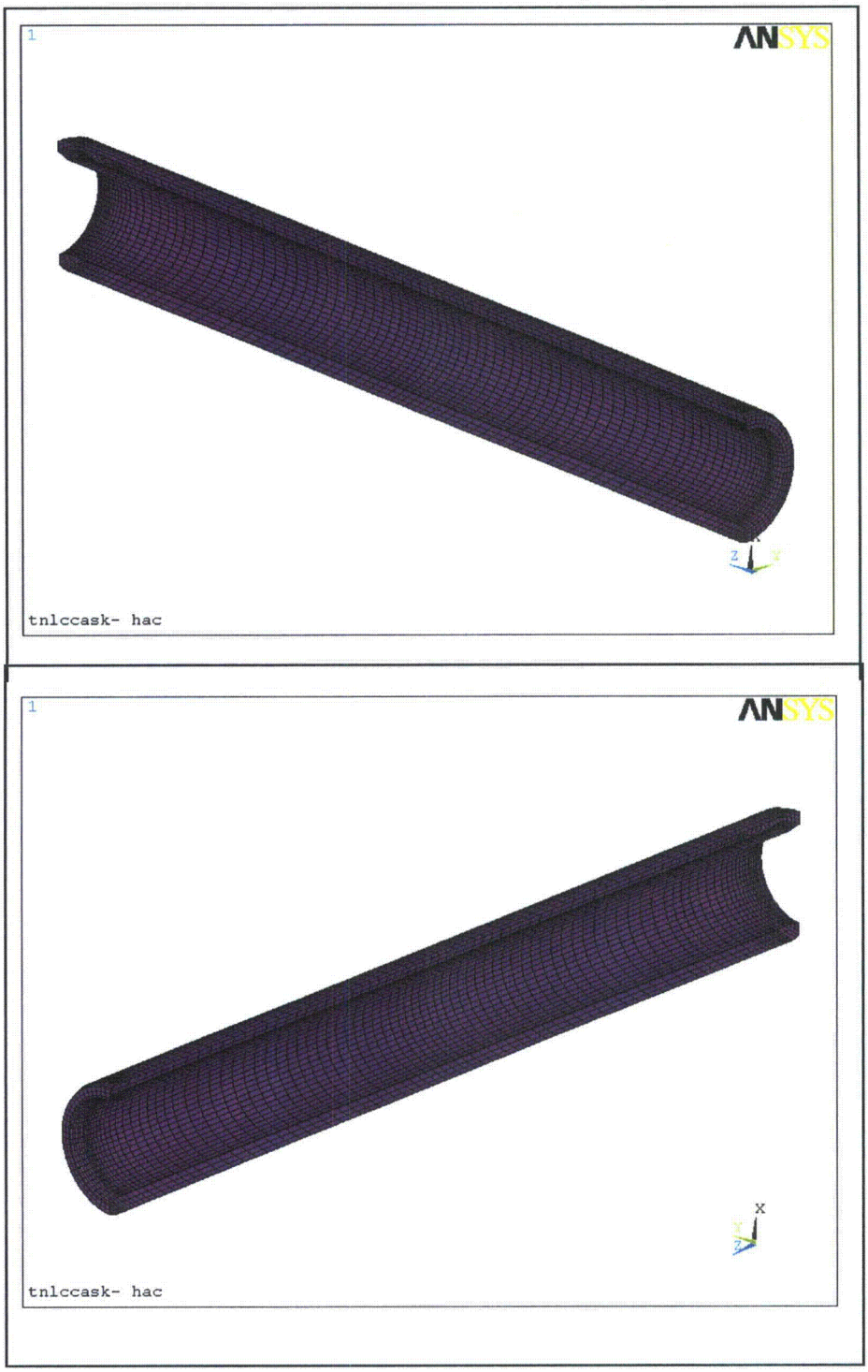

Figure 2.13.1-9
TN-LC Cask 3D Model – Gamma Shield Contact Interface

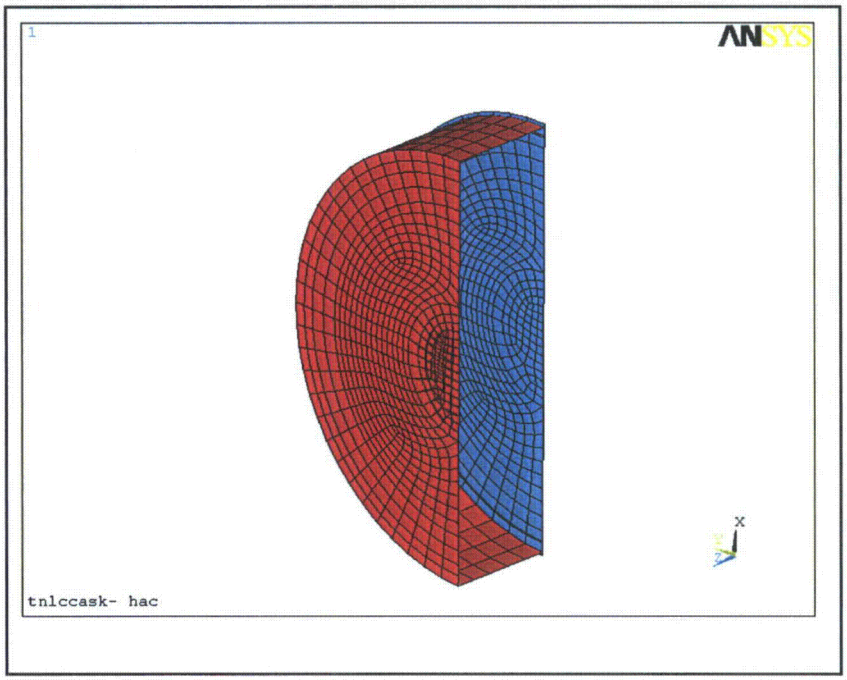

Figure 2.13.1-10
TN-LC Cask 3D Model – Gamma Shield (Top) Contact Interface

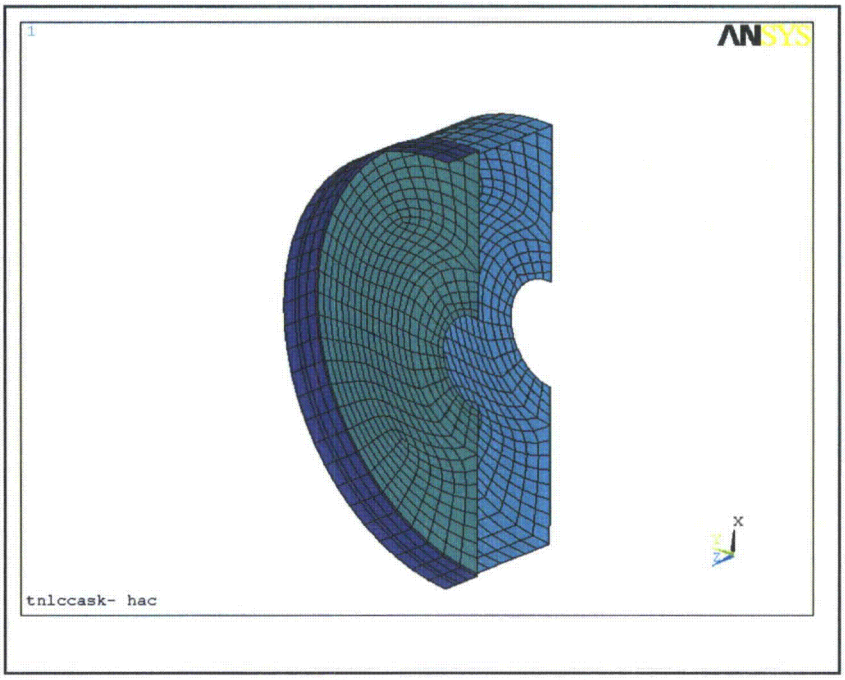

Figure 2.13.1-11
TN-LC Cask 3D Model – Gamma Shield (Bottom) Contact Interface

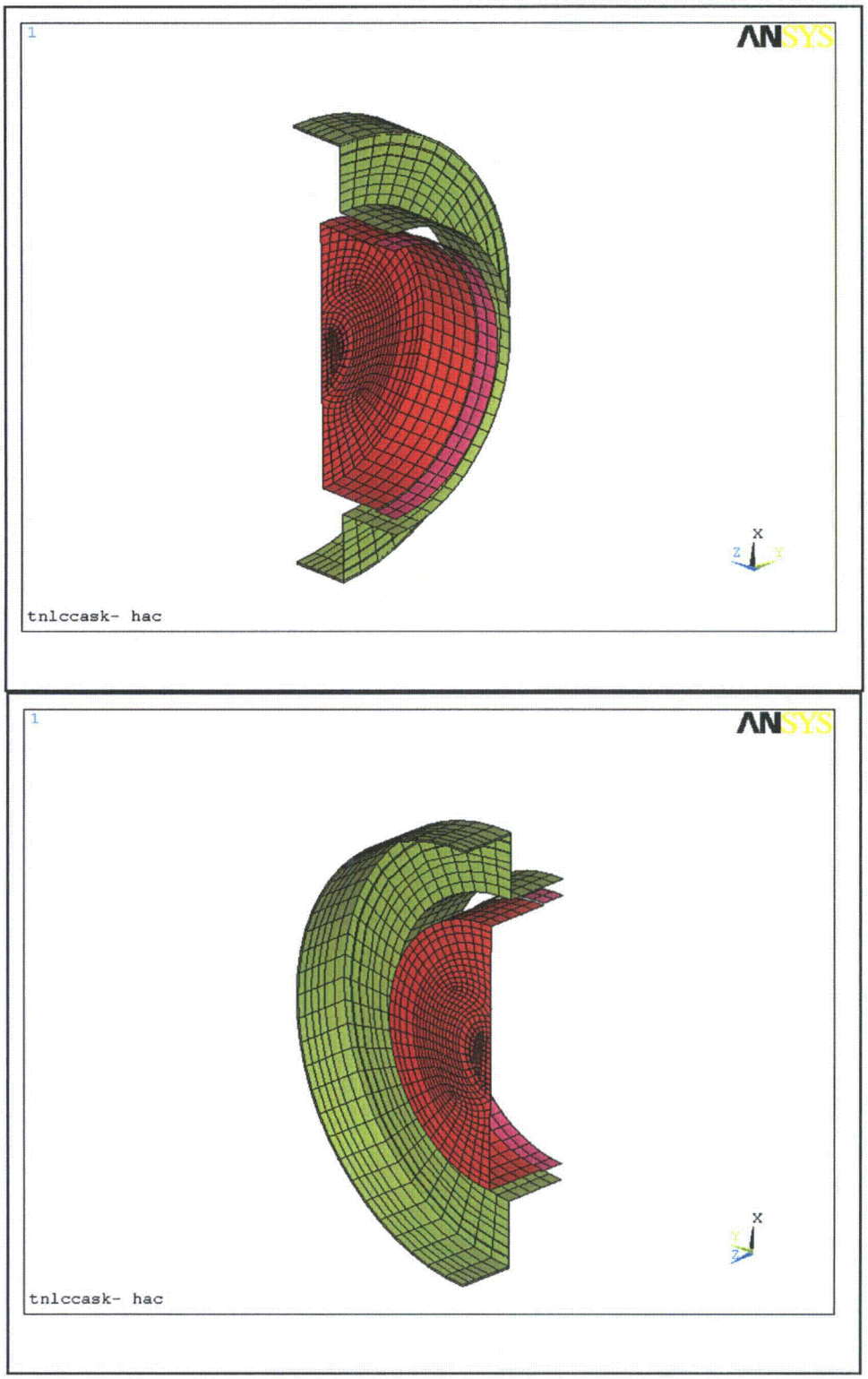

Figure 2.13.1-12
TN-LC Cask 3D Model – Lid Contact Interface

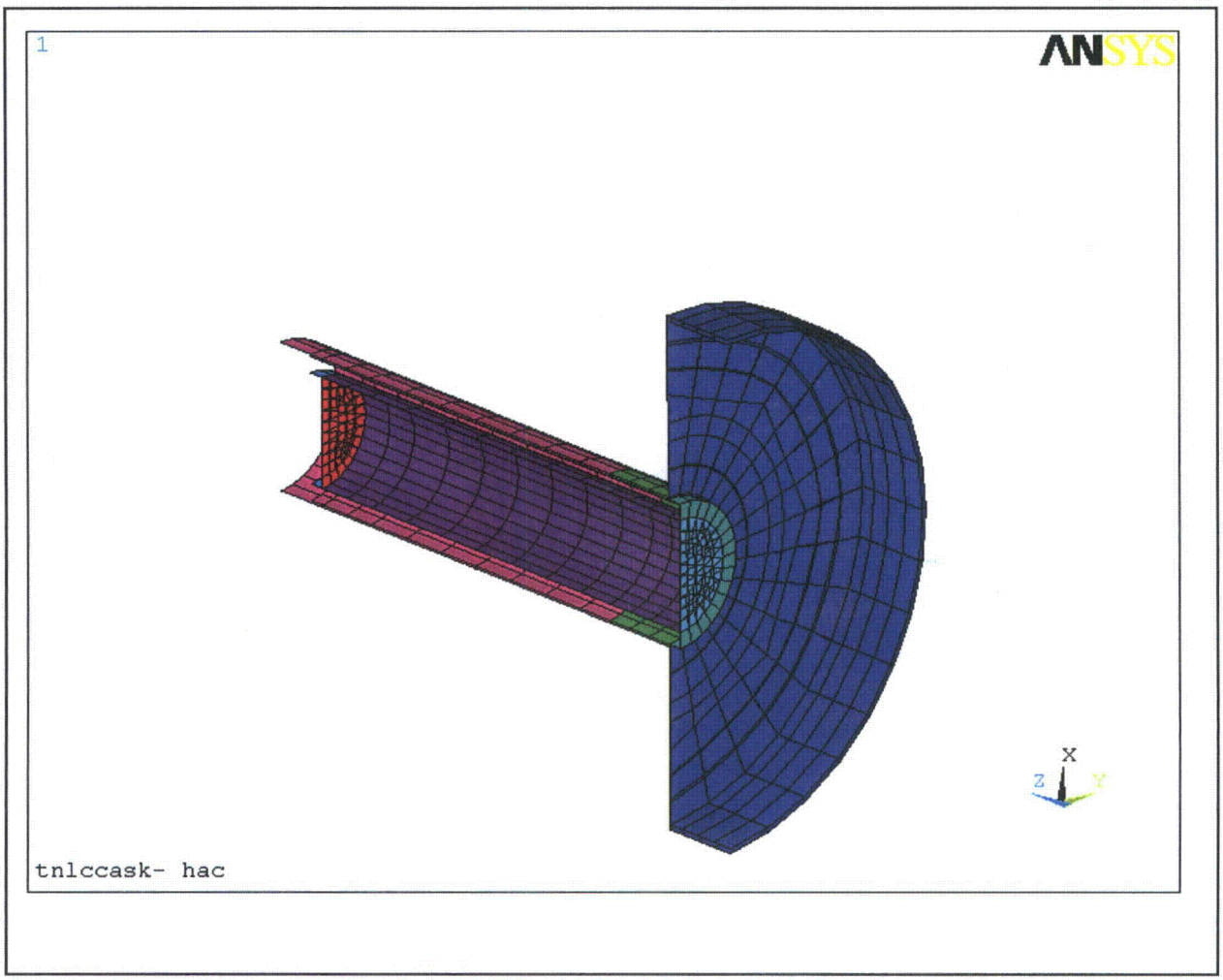

Figure 2.13.1-13
TN-LC Cask 3D Model – Bottom Plug Contact Interface

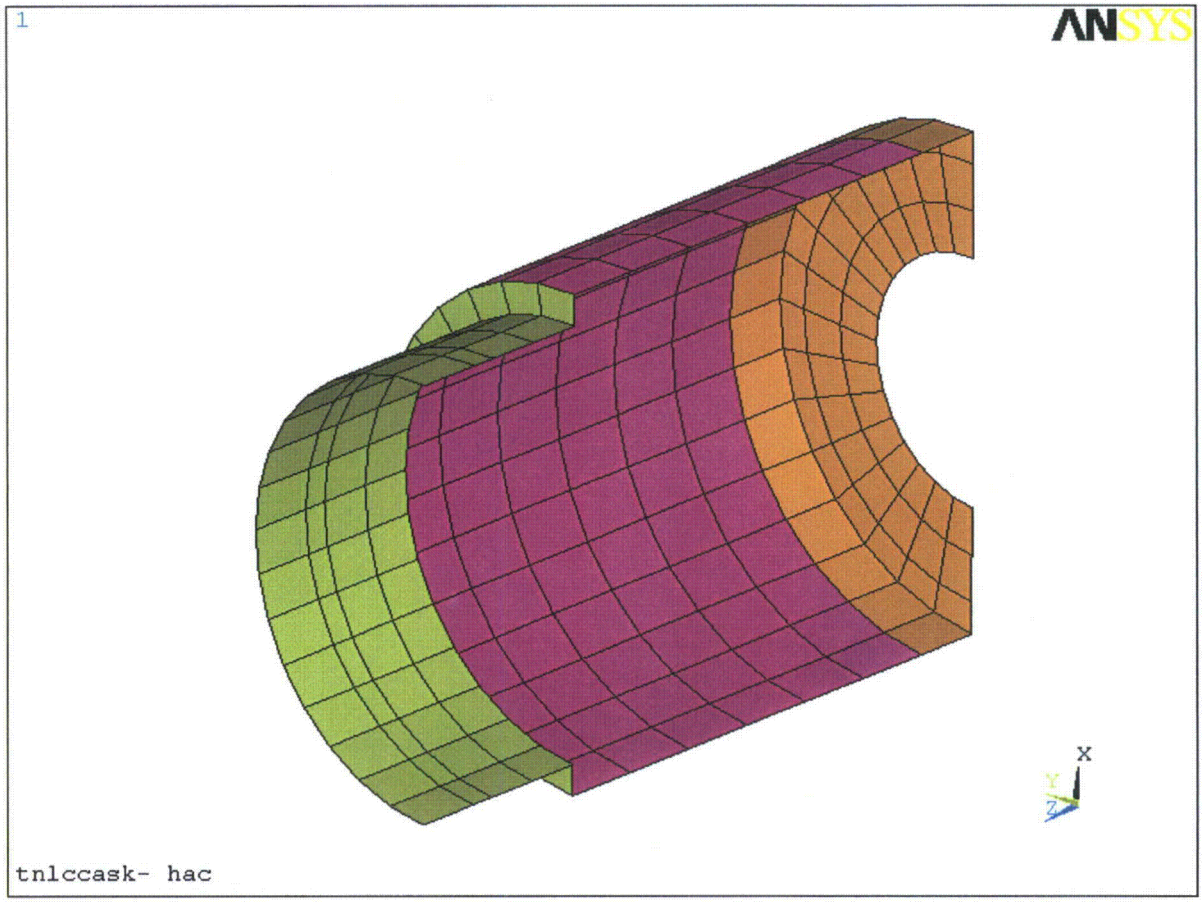

Figure 2.13.1-14
TN-LC Cask 3D Model – Bushing Contact Interface

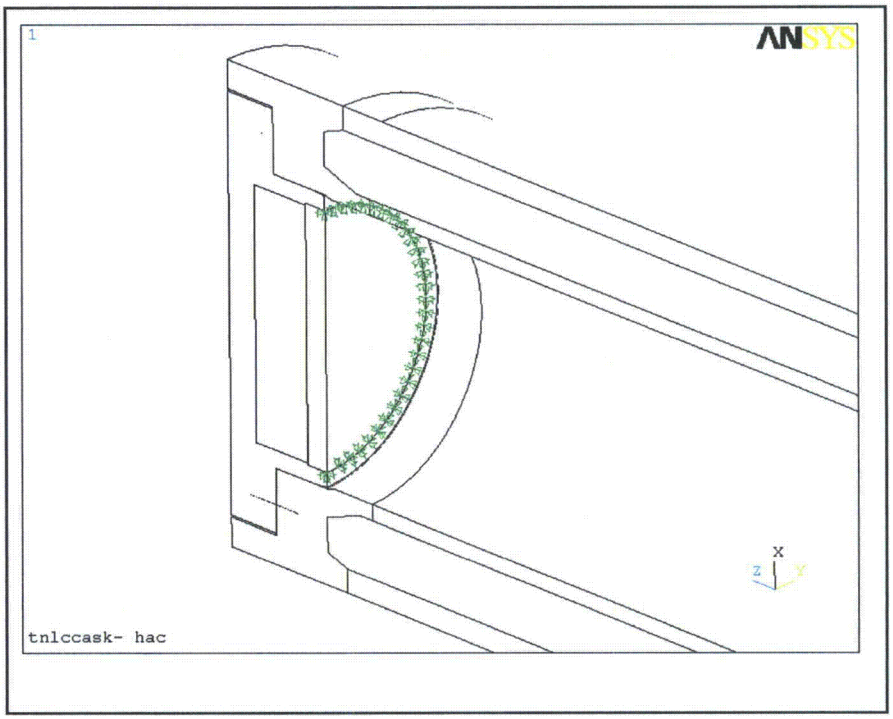

Figure 2.13.1-15
TN-LC Cask 3D Model – Couplings (Welds) between Lid and Gamma Shielding Cap (Top)

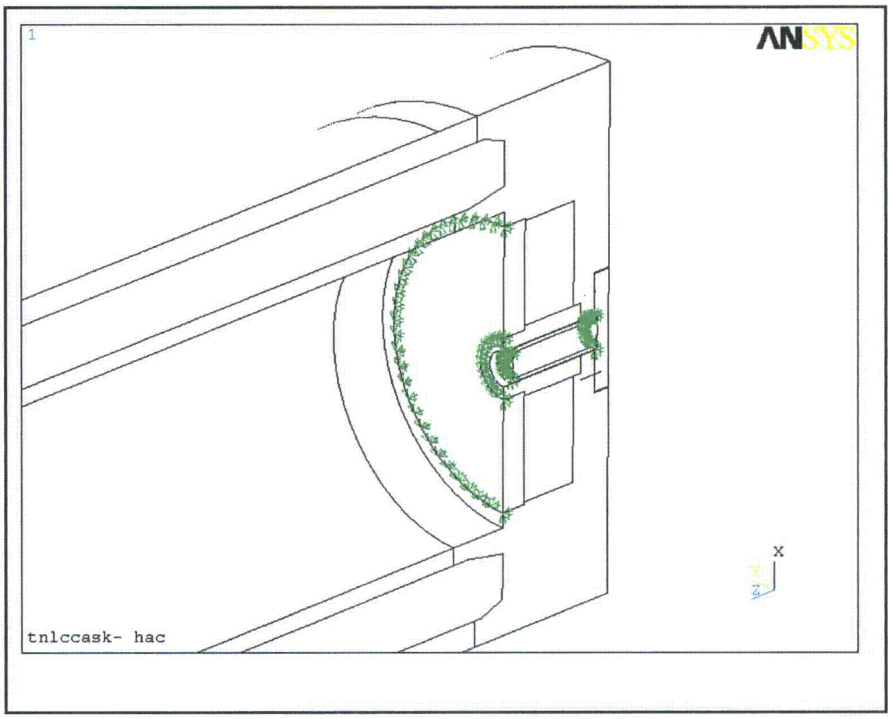

Figure 2.13.1-16
TN-LC Cask 3D Model – Couplings (Welds) for Bottom Flange and Bottom Plug

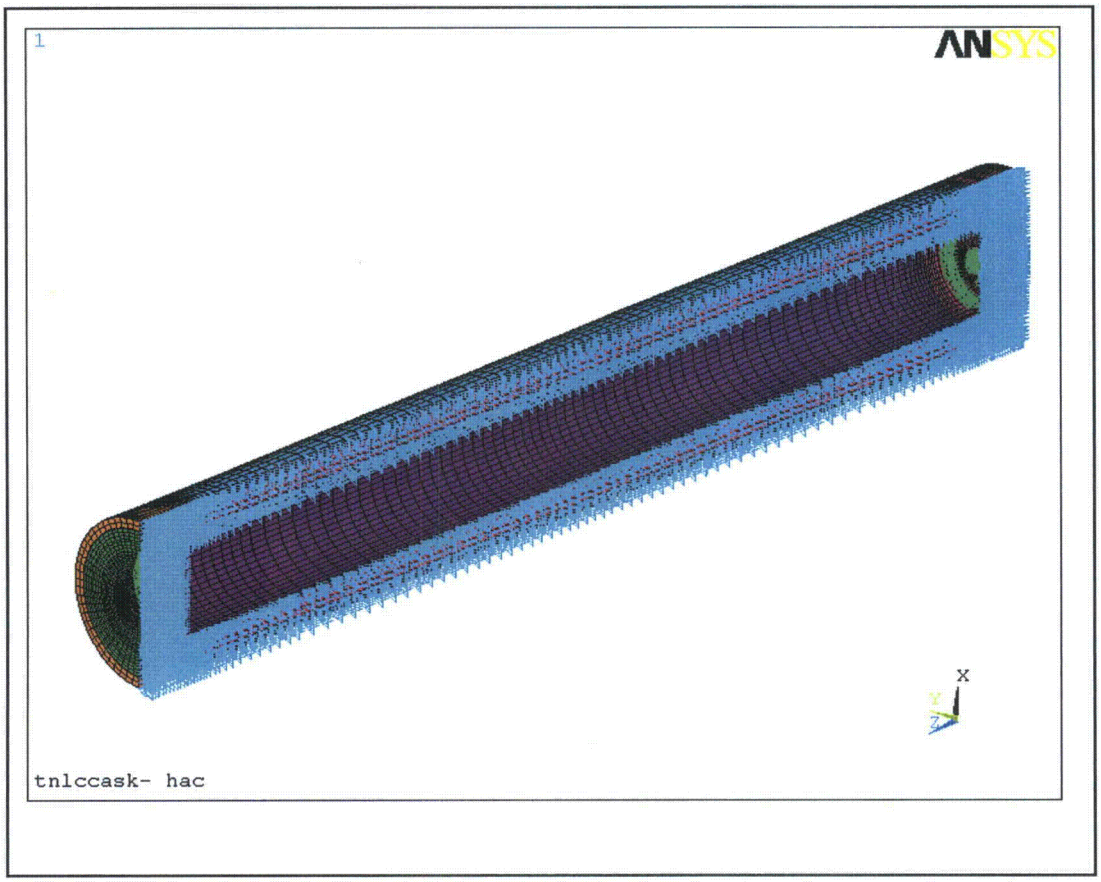

Figure 2.13.1-17
TN-LC Cask 3D Model Symmetry Boundary Conditions

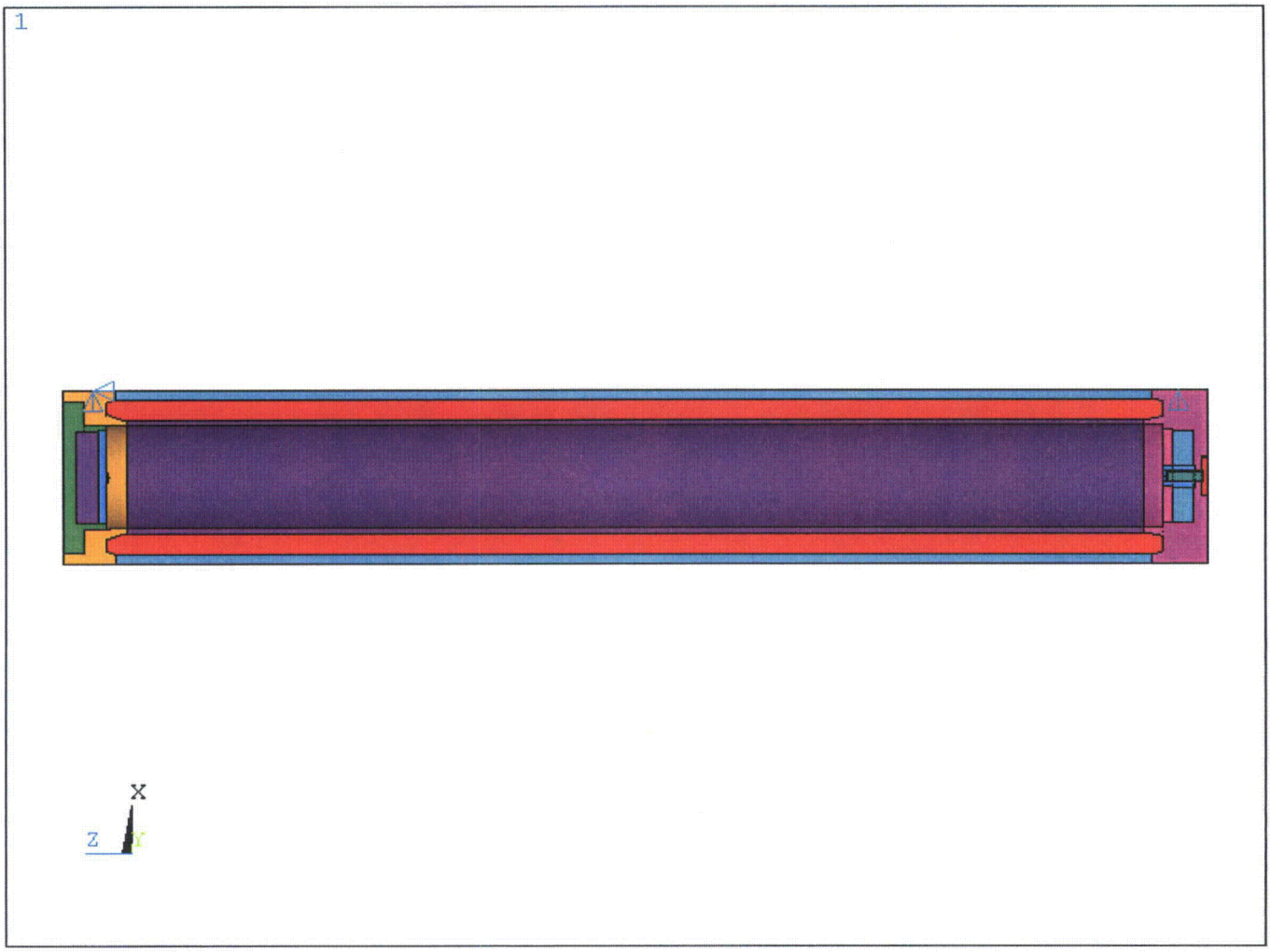

Figure 2.13.1-18
TN-LC Cask Spatial Stabilization in x-z Plane for CG Over Corner Drop on Lid End Cases

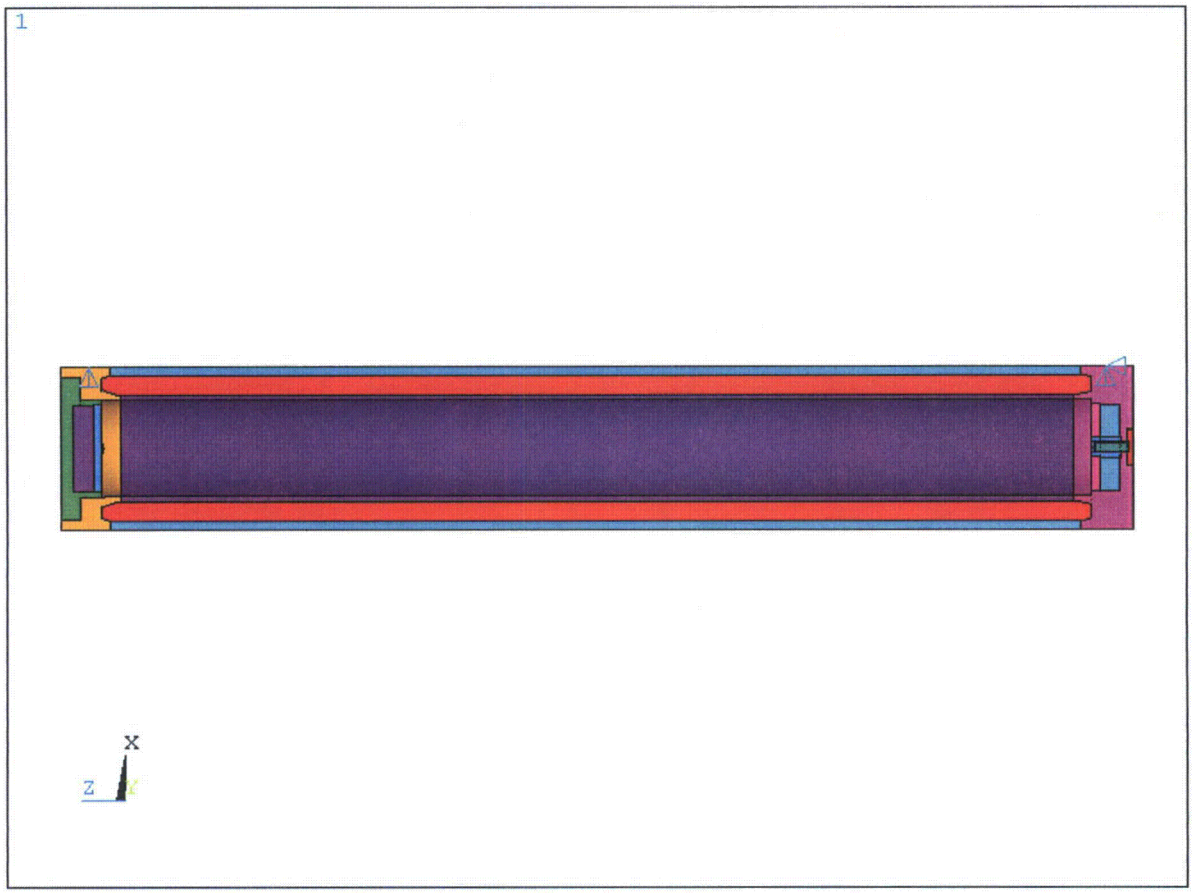

Figure 2.13.1-19
TN-LC Cask Spatial Stabilization in x-z Plane for CG Over Corner Drop
on Bottom End Cases and Side Drop Cases

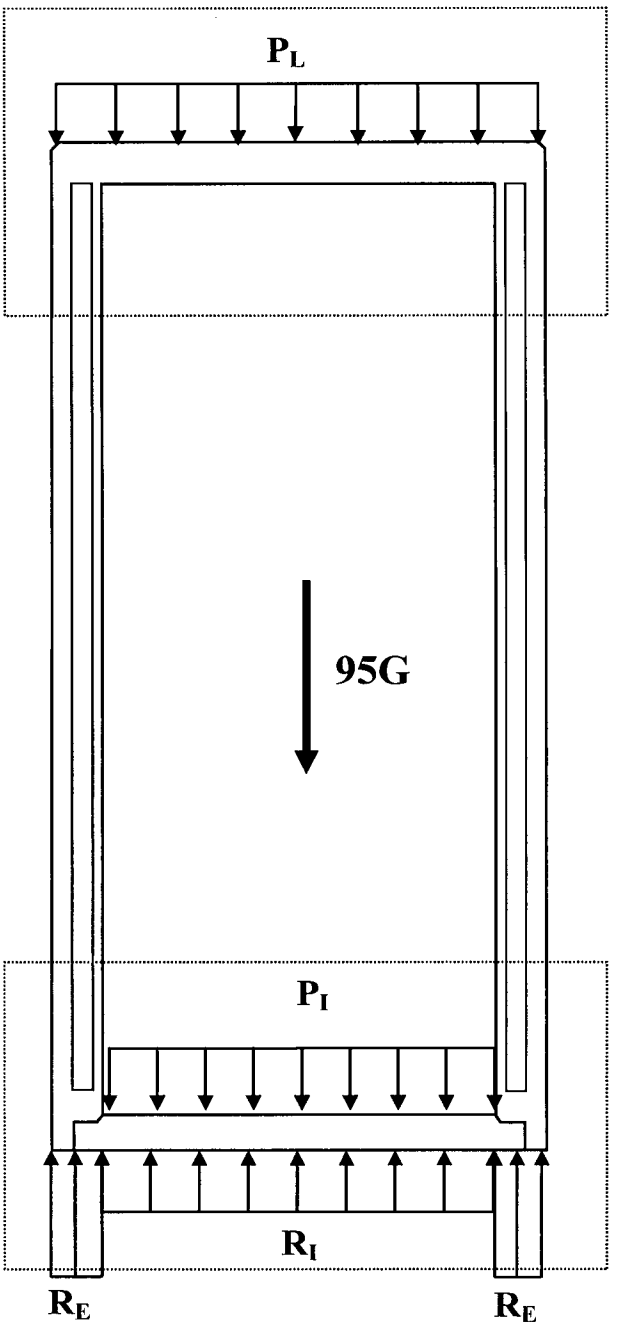

Figure 2.13.1-20
TN-LC Cask End Drop on Lid End Loading

(Cask to limiter interface details are not shown.)

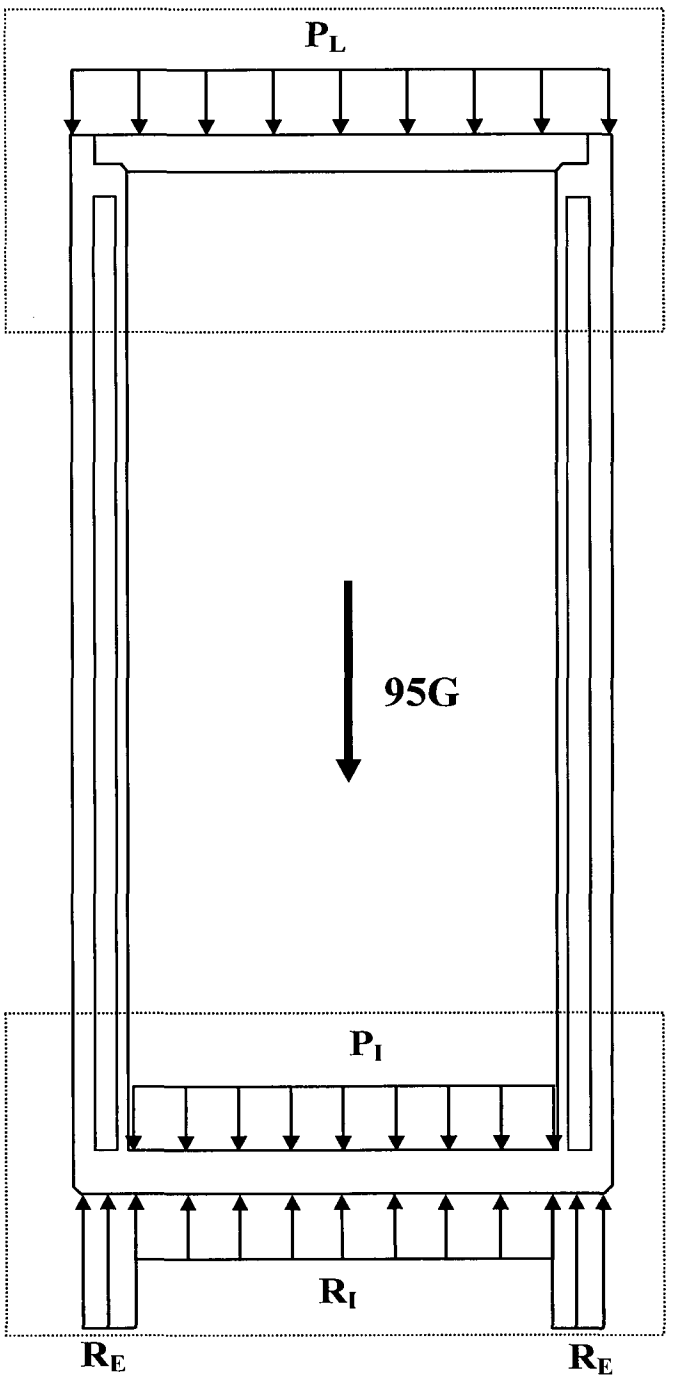

Figure 2.13.1-21
TN-LC Cask End Drop on Bottom End Loading

(Cask to limiter interface details are not shown.)

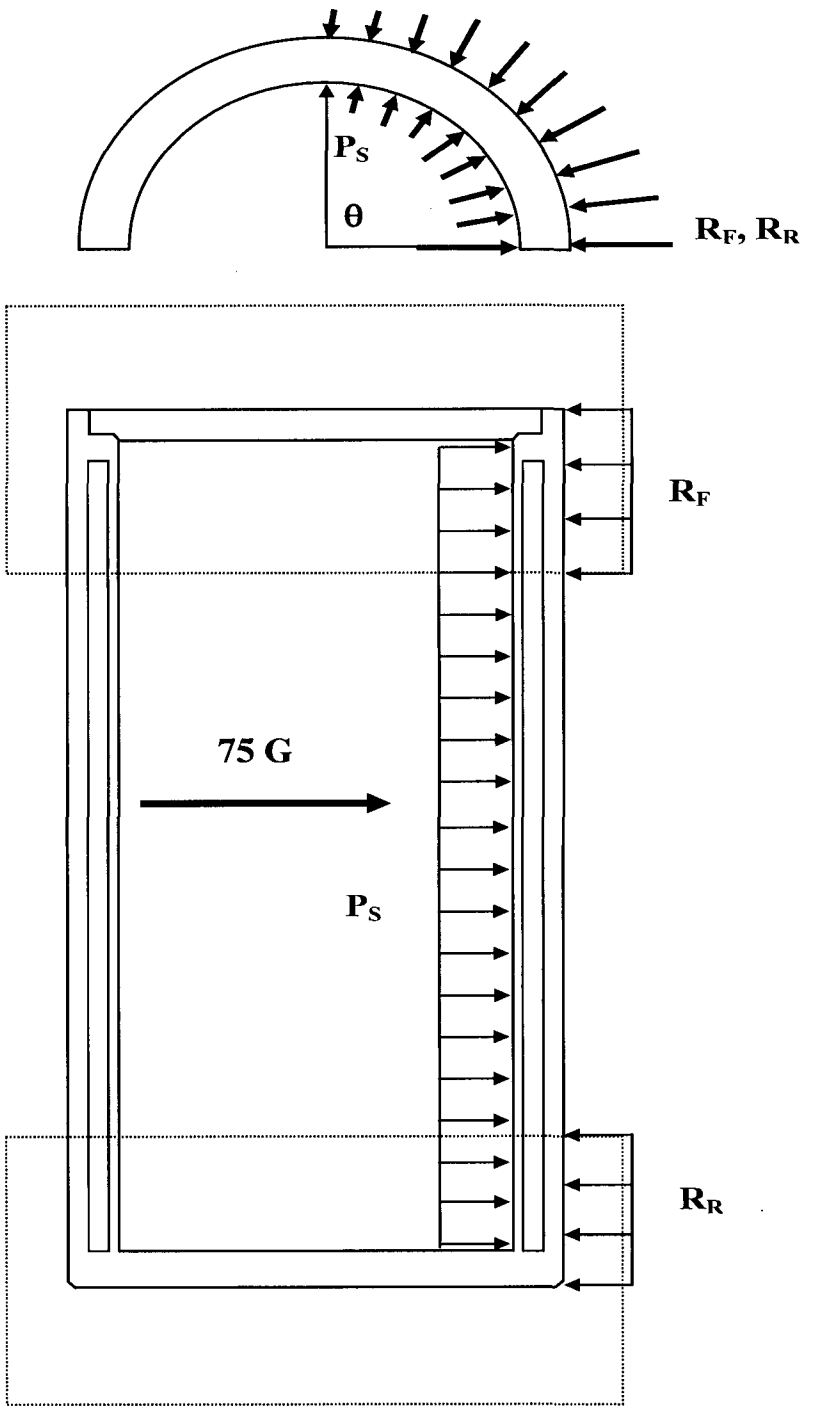

Figure 2.13.1-22
TN-LC Cask Side Drop Loading

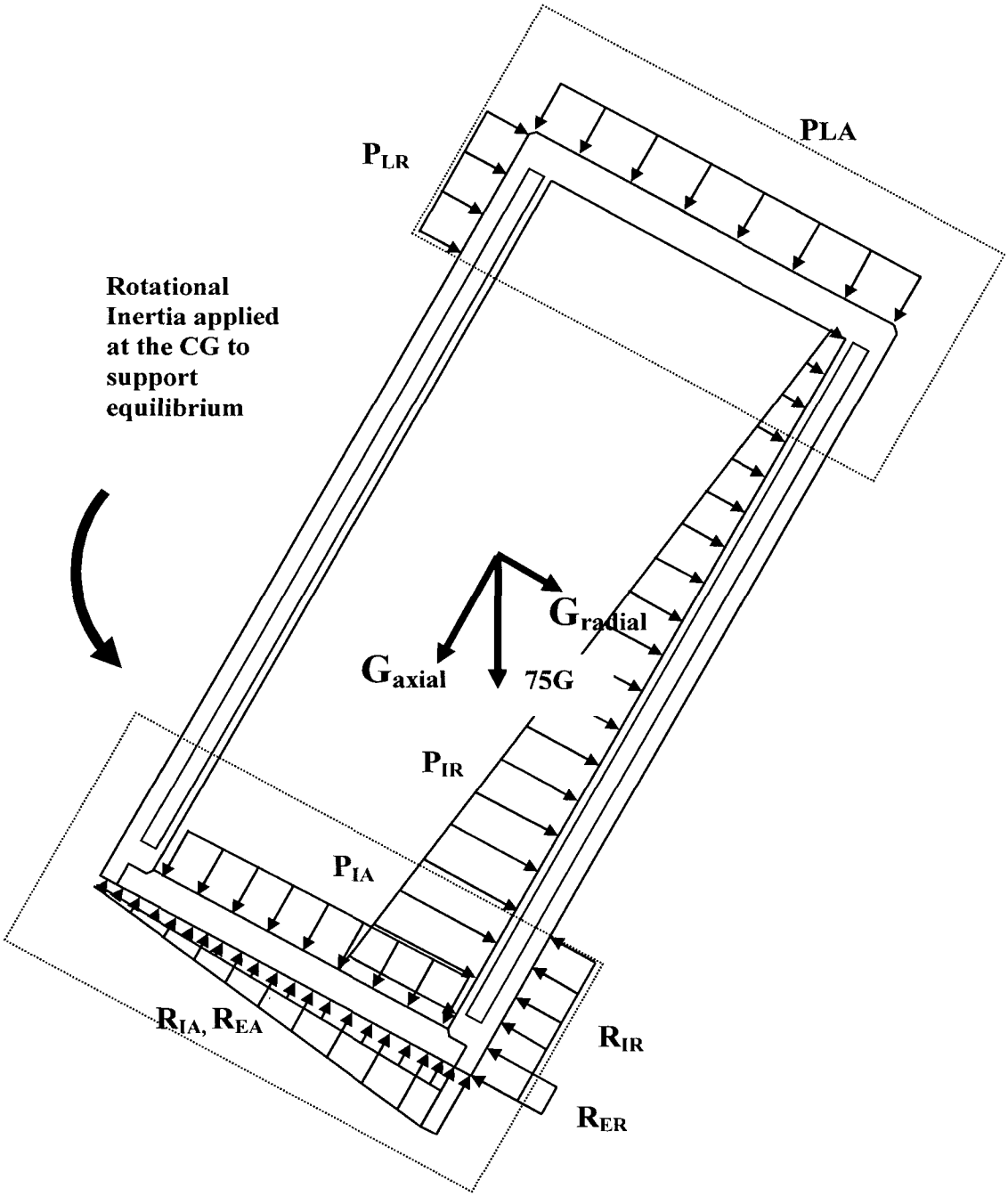

Figure 2.13.1-23
TN-LC Cask 30 ft CG Over Corner Drop on Lid End Loading

(Cask to limiter interface details are not shown.)

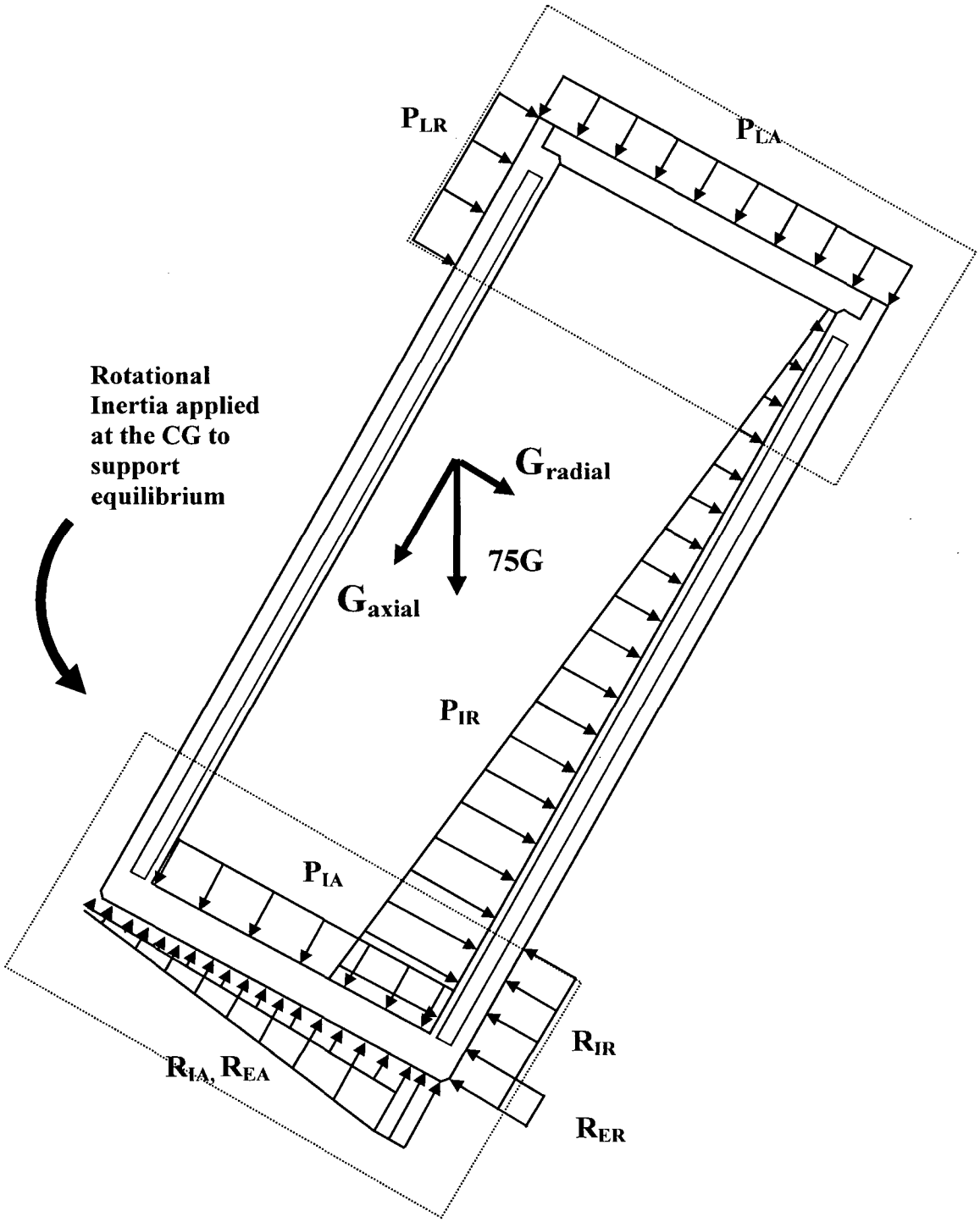

Figure 2.13.1-24
TN-LC Cask 30 ft CG Over Corner Drop on Bottom End Loading

(Cask to limiter interface details are not shown.)

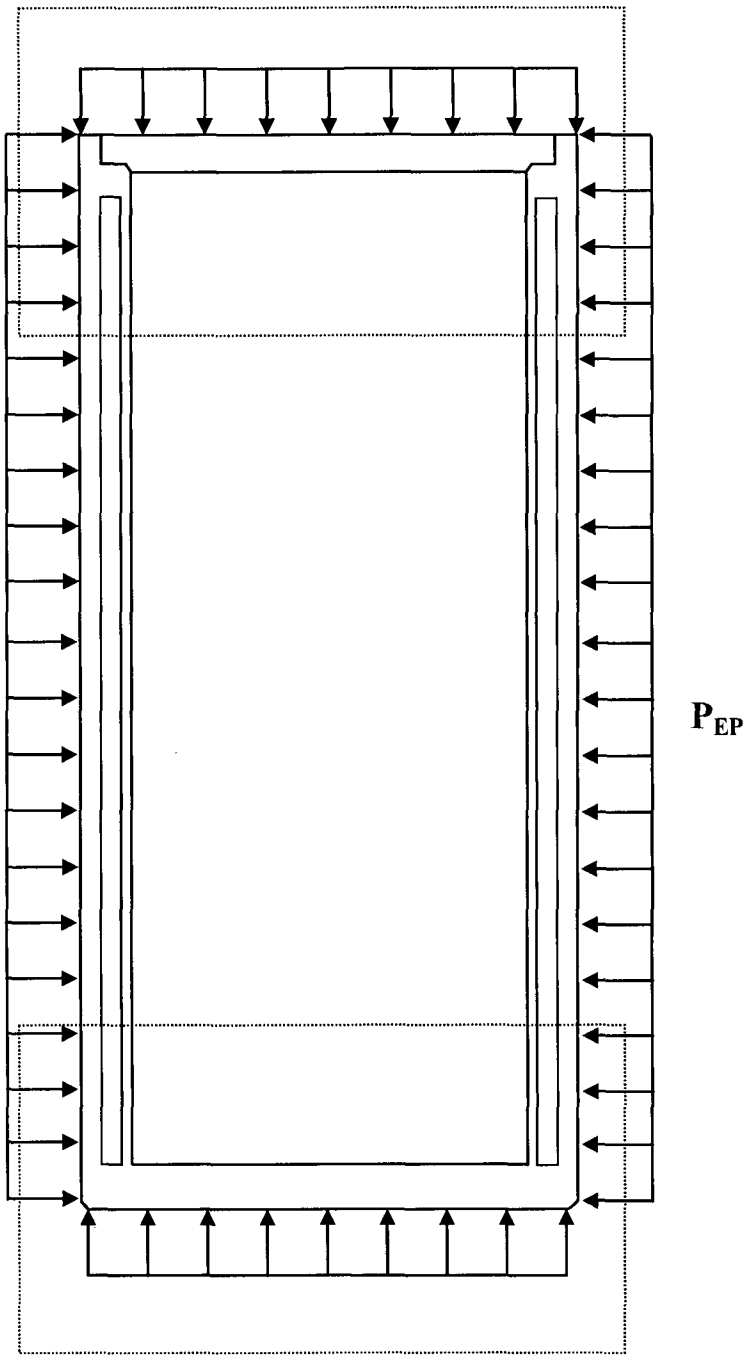

Figure 2.13.1-25
TN-LC Cask External Pressure Loading

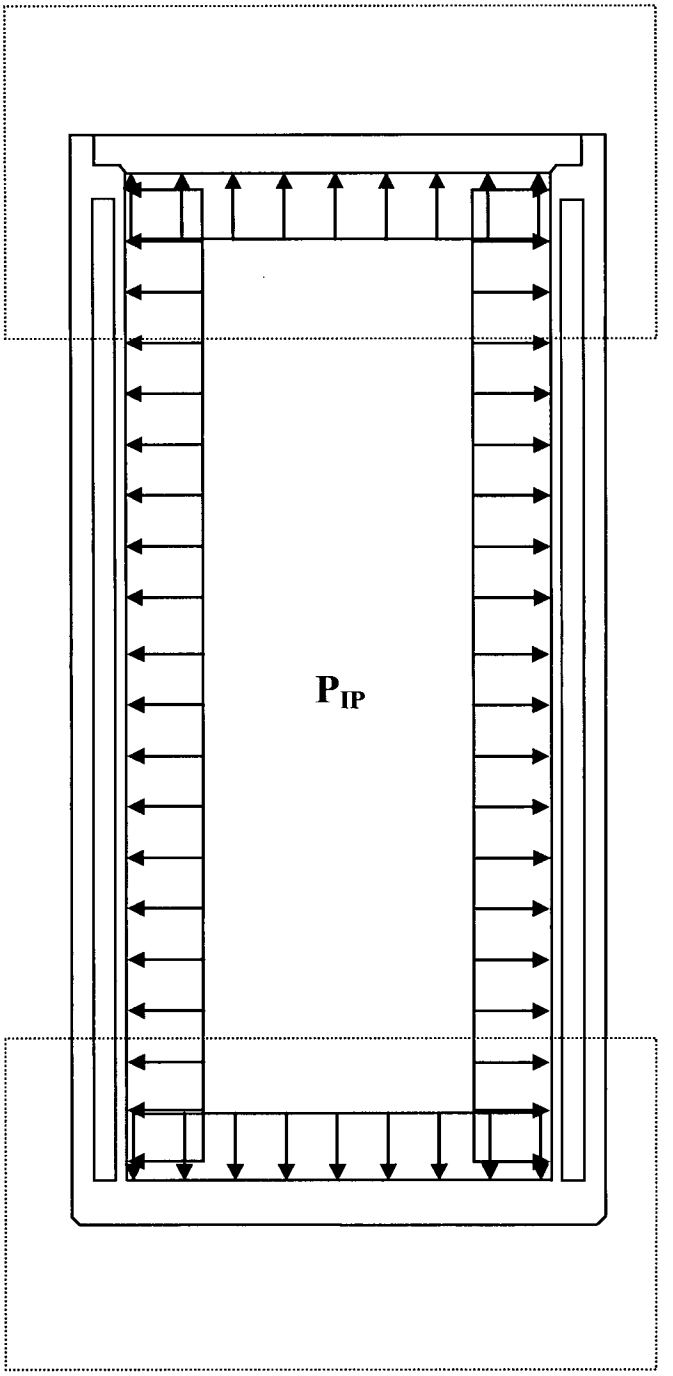

Figure 2.13.1-26
TN-LC Cask Internal Pressure Loading

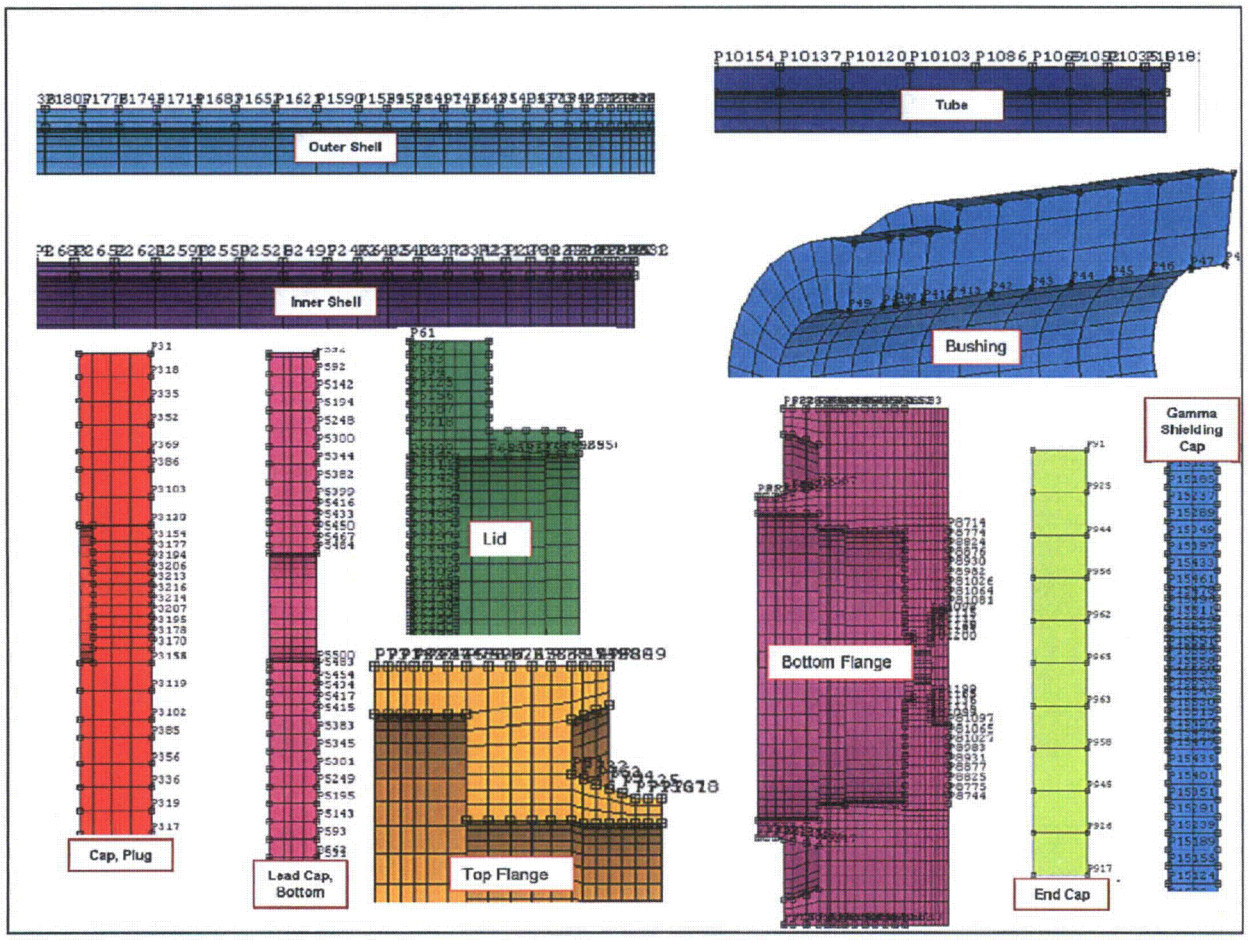

Figure 2.13.1-27
TN-LC Cask Stress Classification Paths at Symmetry Plane for Cask Components

Appendix 2.13.2
TN-LC Cask Lid and Bottom Plug Closure Bolt Analysis

TABLE OF CONTENTS

2.13.2.1 Purpose 2.13.2-1
2.13.2.2 Lid Bolt Load Calculations 2.13.2-3
2.13.2.2.1 Bolt Preload 2.13.2-3
2.13.2.2.2 Gasket Seating Load 2.13.2-3
2.13.2.2.3 Internal Pressure Load 2.13.2-3
2.13.2.2.4 Temperature Load 2.13.2-4
2.13.2.2.5 Impact Load 2.13.2-5
2.13.2.2.6 Puncture Load 2.13.2-5
2.13.2.2.7 External Pressure Load of Immersion 2.13.2-5
2.13.2.3 Lid Bolt Load Combinations 2.13.2-7
2.13.2.3.1 Additional Prying Bolt Force 2.13.2-7
2.13.2.3.2 Bending Moment Bolt Force 2.13.2-8
2.13.2.4 Lid Bolt Stress Calculations 2.13.2-9
2.13.2.4.1 Average Tensile Stress 2.13.2-9
2.13.2.4.2 Bending Stress 2.13.2-9
2.13.2.4.3 Shear Stress 2.13.2-10
2.13.2.4.4 Maximum Combined Stress Intensity 2.13.2-10
2.13.2.4.5 Stress Ratios 2.13.2-10
2.13.2.4.6 Bearing Stress Under Bolt Head 2.13.2-11
2.13.2.5 Lid Bolt Results 2.13.2-12
2.13.2.6 Lid Bolt Fatigue Analysis 2.13.2-13
2.13.2.6.1 Vibration/Shock 2.13.2-13
2.13.2.6.2 Damage Factor Calculation 2.13.2-13
2.13.2.7 Bottom Plug Bolt Fatigue Analysis 2.13.2-15
2.13.2.8 Minimum Engagement Length for Bolt and Flange 2.13.2-16
2.13.2.9 Bottom Plug Bolt Analysis 2.13.2-18
2.13.2.9.1 Bolt Load Calculations 2.13.2-19
2.13.2.9.2 Load Combinations 2.13.2-23
2.13.2.9.3 Bolt Stress Calculations 2.13.2-25
2.13.2.9.4 Bearing Stress Under Bolt Head 2.13.2-27
2.13.2.9.5 Results 2.13.2-27
2.13.2.9.6 Minimum Engagement Length for Bolt and Flange 2.13.2-27
2.13.2.10 Conclusions 2.13.2-30
2.13.2.11 References 2.13.2-31

LIST OF TABLES

Table 2.13.2-1 Design Parameters for Bolts Analysis 2.13.2-32
Table 2.13.2-2 Bolt Data 2.13.2-33
Table 2.13.2-3 Allowable Stresses in Closure Bolts for Normal Conditions 2.13.2-33
Table 2.13.2-4 Allowable Stresses in Closure Bolts for Accident Conditions 2.13.2-34
Table 2.13.2-5 Lid Bolts Individual Summary 2.13.2-34
Table 2.13.2-6 Lid Bolts Normal and Accident Load Combinations 2.13.2-35
Table 2.13.2-7 Lid and Bottom Plug Closure Plate Bolt Stresses 2.13.2-35
Table 2.13.2-8 Damage Factor Calculation 2.13.2-36
Table 2.13.2-9 Bottom Plug Closure Plate Bolts Individual Summary 2.13.2-36
Table 2.13.2-10 Bottom Plug Closure Plate Bolts Normal and Accident Load Combinations 2.13.2-37

Appendix 2.13.2
TN-LC Cask Lid and Bottom Plug Closure Bolt Analysis

NOTE: References in this Appendix are shown as [1], [2], etc. and refer to the reference list in Section 2.13.2.11.

2.13.2.1 Purpose

This Appendix analyzes the ability of the cask closure bolts to maintain a leak-tight seal under events defined by Normal Conditions of Transport (NCT) and the Hypothetical Accident Conditions (HAC). Also evaluated in this section are the stresses in the bolt threads and in the internal threads, and the lid bolt fatigue. The stress analysis is performed in accordance with NUREG/CR-6007 [1].

Appendix 1.4.1 contains reference drawings for the cask lid and bottom plug.

The closure lid has a diameter of 26.25 in. and consists of a 2.00-in. thick forging with a 3.50-in. thick outer flange, a 4.00-in. thick lead plug and a 1.50-in. thick inner plate. The lid is bolted directly to the end of the containment vessel flange by 20 high-strength alloy steel 1.0-in. diameter bolts on a 23.25 in. diameter bolt circle. Close fitting alignment pins ensure that the lid is centered in the vessel. The bolts material is SA-540 Grade B23 Class 1 which has a yield strength of 140.3 ksi and a tensile strength of 165.0 ksi at 300°F.

The following ways to minimize bolt forces and bolt failures for shipping casks are taken directly from [1], page xiii. All of the following design methods are employed in the TN-LC cask closure system:

- Protect closure lid from direct impact to minimize bolt forces generated by free drops (use impact limiters).
- Use materials with similar thermal properties for the closure bolts, the lid, and the cask wall to minimize the bolt forces generated by a fire accident.
- Apply sufficiently large bolt preload to minimize fatigue and loosening of the bolts by vibration.
- Lubricate bolt threads to reduce required preload torque and to increase the predictability of the achieved preload.
- Use closure lid design which minimizes the prying actions of applied loads.

The following evaluations are made in this section:

- Bolt preload
- Gasket seating load
- Internal pressure loads
- Temperature load
- Impact load
- Puncture load
- External pressure loads
- Load combinations for normal and accident conditions
- Bolt stresses and allowable stresses
- Bearing stress
- Lid bolt fatigue
- Thread engagement length evaluation

The design parameters for the closure lid analysis taken from [1] are summarized in Table 2.13.2-1. The lid bolt data and material allowables are presented in Table 2.13.2-2 to Table 2.13.2-4. Material properties and allowable stresses for NCT and HAC analyses are based on 300 °F, which bound -40 °F, -20 °F, and 100 °F ambient conditions.

The following load cases are considered in the analysis:

1. Preload + Temperature Load (NCT),
2. Internal Pressure + Puncture Load (HAC).

2.13.2.2 Lid Bolt Load Calculations

2.13.2.2.1 Bolt Preload

The method of analysis is described in Table 4.1 of [1].

A bolt torque range of 400 to 450 ft-lb is required to ensure leak tightness against normal and accident loadings.

Bolt preload for the minimum torque is:

$$F_a = \frac{Q}{K \times D_b} = \frac{400 \times 12}{0.135 \times 1.0} = 35{,}556 \text{ lb/bolt}$$

Bolt preload for the maximum torque is:

$$F_a = \frac{Q}{K \times D_b} = \frac{450 \times 12}{0.135 \times 1.0} = 40{,}000 \text{lb/bolt}$$

Residual torsional moment for the minimum torque is:

$$M_{tr} = 0.5 \times Q = 0.5 \times 400 \times 12 = 2{,}400 \text{ in.lb/bolt}$$

Residual torsional moment for the maximum torque is:

$$M_{tr} = 0.5 \times Q = 0.5 \times 450 \times 12 = 2{,}700 \text{ in.lb/bolt}$$

Residual tensile bolt force:

$$F_{ar} = F_a = 40{,}000 \text{ lb/bolt}$$

2.13.2.2.2 Gasket Seating Load

The analysis is described in Table 4.2 of [1].

An elastomer O-ring is used, therefore the gasket seating load is negligible, and $F_s = 0$.

2.13.2.2.3 Internal Pressure Load

The analysis is described in Table 4.3 of [1].

The axial force per bolt due to internal pressure is:

$$F_a = \frac{\pi \times D_{lg}^2 \times (P_{li} - P_{lo})}{4N_b}$$

D_{lg} for outer seal is conservatively taken equal to the outer diameter of the outer seal groove and is equal to (see Appendix 1.4.1):

$$D_{lg} = 21.25 \text{ in.}$$

Therefore:

$$F_a = \frac{\pi \times 21.250^2 \times (30-0)}{4 \times 20} = 532 \text{ lb/bolt}$$

The fixed edge closure lid force is:

$$F_f = \frac{D_{lb} \times (P_{li} - P_{lo})}{4} = \frac{23.25 \times (30-0)}{4} = 175 \text{ lb/in.}$$

The fixed edge closure lid moment is:

$$M_f = \frac{(P_{li} - P_{lo}) \times D_{lb}^2}{32} = \frac{30 \times 23.25^2}{32} = 507 \text{ in.lb/in.}$$

The shear bolt force per bolt is:

$$F_s = \frac{\pi \times E_l \times t_l \times (P_{li} - P_{lo}) \times D_{lb}^2}{2 \times N_b \times E_c \times t_c \times (1 - N_{ul})}$$

$$F_s = \frac{\pi \times 27 \times 10^6 \times 3.5 \times (30-0) \times 23.25^2}{2 \times 20 \times 27 \times 10^6 \times 6.0 \times (1-0.3)} = 1{,}062 \text{ lb/bolt}$$

The lid shoulder takes this shear force, so $F_s = 0$.

2.13.2.2.4 Temperature Load

The analysis is described in Table 4.4 of [1].

It is conservatively assumed that the initial temperature of the cask body is 70°F and the final temperature is 300°F.

The bolt material is SA-540 Grade 3 Class 1; the lid forging is made of SA-182, Grade F304 and top cask forging is SA-182, Grade FXM19 and the cask walls are made of SA-240, Type XM19.

The coefficient of thermal expansion of the bolts at 300°F is 6.9×10^{-6} in./in./°F, and the coefficient of thermal expansion of the lid forging is 9.2×10^{-6} in./in./°F, and the cask top forging and cask walls is 8.7×10^{-6} in./in./°F.

The axial force per bolt due to the thermal expansion difference between the closure lid and bolt is:

$$F_a = 0.25 \times \pi \times D_b^2 \times E_b(\alpha_l T_l - \alpha_b T_b)$$

D_b for the lid bolt = 1.00 in., Therefore:

$$F_a = 0.25 \times \pi \times 1.0^2 \times 26.7 \times 10^6 \times (9.2 - 6.9) \times 10^{-6} \times (300 - 70)$$
$$F_a = 11{,}094 \text{ lb/bolt}$$

The shear force per bolt due to the thermal expansion difference between the closure lid and cask walls is:

$$F_s = \frac{\pi \times E_l \times t_l \times D_{lb} \times (\alpha_l T_l - \alpha_c T_c)}{N_b \times (1 - N_{ul})} = 56{,}699 \text{ lb/bolt}$$

Conservatively, if we assume that the bolt hole in the lid will shrink because of thermal expansion, the diameter will be:

$D' = D - D\alpha\Delta T = 1.13 - 1.13 \times 9.2 \times 10^{-6} \times (300-70) = 1.1276$ in.,

which is more than the diameter of the bolt (1 in.), thus there will not be any shear force due to thermal gradient between lid and the cask walls, so $F_s = 0$.

Since the temperature at the inner and outer surface of the lid is same, there is no load caused by a temperature gradient between them, so F_s=0.

2.13.2.2.5 Impact Load

The structural integrity of the lid bolt due to the delayed impact associated with the maximum potential gap is evaluated in Appendix 2.13.7.

2.13.2.2.6 Puncture Load

Impact limiters are assumed to protect the ends of the cask body and to absorb the puncture load energy to such an extent that no indirect prying force is generated by the six-in. diameter puncture bar.

2.13.2.2.7 External Pressure Load of Immersion

The analysis is described in Table 4.3 of [1].

The pressure outside the cask in the case of immersion is assumed to be 290 psig. The pressure inside the cask is conservatively taken to be 0 psig.

The axial force per bolt due to external pressure is:

$$F_a = \frac{\pi \times D_{lg}^2 \times (P_{li} - P_{lo})}{4N_b}$$

D_{lg} for outer seal is 21.25 in., therefore:

$$F_a = \frac{\pi \times 21.250^2 \times (0 - 290)}{4 \times 20} = -5{,}142{,}5 \text{ lb/bolt}$$

Since this force is negative (inward acting), the actual resulting bolt force is $F_a = 0$ because the applied load is supported by the cask wall and not by the bolts.

The fixed edge closure lid force is:

$$F_f = \frac{D_{lb} \times (P_{li} - P_{lo})}{4} = \frac{23.25 \times (0 - 290)}{4} = -1{,}685.6 \text{ lb/in.}$$

The fixed edge closure lid moment is:

$$M_f = \frac{(P_{li} - P_{lo}) \times D_{lb}^2}{32} = \frac{(0 - 290) \times 23.25^2}{32} = -4{,}898.8 \text{ in.lb/in.}$$

The shear bolt force per bolt is:

$$F_s = \frac{\pi \times E_l \times t_l \times (P_{li} - P_{lo}) \times D_{lb}^2}{2 \times N_b \times E_c \times t_c \times (1 - N_{ul})} = \frac{\pi \times 27.00 \times 10^6 \times 3.5 \times (0 - 290) \times 23.25^2}{2 \times 20 \times 27.00 \times 10^6 \times 6 \times (1 - 0.3)} = -10{,}260 \text{ lb/bolt}$$

The lid shoulder takes this shear force, so $F_s = 0$.

The loads calculated in this section are summarized in Table 2.13.2-5.

2.13.2.3 Lid Bolt Load Combinations

A summary of normal and accident condition load combinations is presented in Table 2.13.2-6. The method used for the following combination is taken from [1], Table 4.9.

2.13.2.3.1 Additional Prying Bolt Force

The analysis is described in Table 2.1 of [1].

Since the prying forces applied act inward, normal to the cask lid, an additional prying bolt force, F_{ap}, is generated (Table 2.1 of [1]). No additional prying bolt force is generated for the outward loadings because of the gap between the lid and flange at the outer edge.

F_{ap} for an inward force is calculated in the following way:

$$F_{ap} = \frac{\pi \times D_{lb}}{N_b} \times \left[\frac{\frac{2 \times M_f}{D_{li} - D_{lb}} - C_1 \times (B - F_f) - C_2 \times (B - P)}{C_1 + C_2} \right]$$

Where $C_1 = 1$, and:

$$C_2 = \frac{8}{3 \times (D_{li} - D_{lb})^2} \frac{L_b}{N_b \times D_b^2 \times E_b} \left[\frac{E_1 \times t_1^3}{1 - N_{ul}} + \frac{(D_{lo} - D_{li}) \times E_{lf} \times t_{lf}^3}{D_{lb}} \right]$$

The bolt length between the top and bottom surfaces of the lid is:

$$L_b = 3.50\,(\text{lid thickness}) - .06\,(\text{gap}) - [1.50\,(\text{counter bore}) - .13\,(\text{washer})] = 2.07\,\text{in.}$$

$$C_2 = \frac{8}{3 \times (18.20 - 23.25)^2} \frac{2.07 \times 27.00 \times 10^6}{20 \times 1.0^2 \times 26.70 \times 10^6} \left[\frac{3.5^3}{1 - 0.3} + \frac{(26.25 - 18.20) \times 3.50^3}{23.25} \right]$$

$$C_2 = 0.8328$$

B is the non-prying tensile bolt force, and P is the bolt preload; both are derived from the load applied to each bolt in normal operating conditions (bolt preload + temperature load + internal pressure load). Conservatively, the fixed-edge closure lid moment is considered for the case of the external pressure load, for which M_f = -4,899 in.-lb/in.

$$P = \frac{F_a \times N_b}{\pi \times D_{lb}} = \frac{51{,}626 \times 20}{\pi \times 23.25} = 14{,}136\,\text{lb/in.}$$

For all inward loadings such as a puncture load, F_f is supported by the cask wall and thus has no effect on both the non-prying and prying bolt forces, B and R. Therefore, $F_f = 0$.

$B=F_f$ if $F_f > P$ and $B = P$ otherwise. Since $F_f = 0 < P$, $B = P = 14{,}136$ lb/in.

Furthermore, the pressure load is not included because it decreases the magnitude of the applied prying moment, which is less conservative.

Therefore:

$$F_{ap} = \frac{\pi \times 23.25}{20} \times \left[\frac{\frac{2 \times (-4{,}899)}{18.20 - 23.25} - 1 \times (14{,}136.3 - 0) - 0.8313 \times (14{,}136 - 14{,}136)}{1 + 0.8328} \right]$$

$$F_{ap} = -24{,}302 \text{ lb/bolt}$$

Since this bolt load is less than the load generated by the minimum bolt preload, the prying force generated by the external pressure load is not critical with respect to bolt stress, and will not result in loss of lid closure seal.

2.13.2.3.2 Bending Moment Bolt Force

The analysis is described in Table 2.2 of [1].

The maximum bending bolt moment M_{bb} generated by the applied load is evaluated as follows:

$$M_{bb} = \frac{\pi \times D_{lb}}{N_b} \frac{K_b}{K_b + K_l} \times M_f$$

The coefficients K_b and K_l are based on geometry and material properties and are defined in Table 2.2 of [1]. By substituting the values given above:

$$K_b = \frac{N_b}{L_b} \frac{E_b}{D_{lb}} \frac{D_b^4}{64} = \frac{20}{2.07} \frac{26.7 \times 10^6}{23.25} \frac{1.0^4}{64} = 1.734 \times 10^5$$

$$K_l = \frac{E_l \times t_l^3}{3\left[\left(1 - N_{ul}^2\right) + \left(1 - N_{ul}\right)^2 \left(\frac{D_{lb}}{D_{lo}}\right)^2\right] D_{lb}} = \frac{27.00 \times 10^6 \times 3.5^3}{3\left[\left(1 - 0.3^2\right) + \left(1 - 0.3\right)^2 \left(\frac{23.25}{26.25}\right)^2\right] 23.25} = 1.282 \times 10^7$$

Therefore:

$$M_{bb} = \frac{\pi \times 23.25}{20} \times \frac{1.734 \times 10^5}{1.734 \times 10^5 + 1.282 \times 10^7} \times M_f$$

In the case of the NCT internal pressure load, $M_f = 507$ in.-lb/in.

Substituting this value into the equation above gives:

$$M_{bb} = 24.70 \text{ in.-lb/bolt}$$

2.13.2.4 Lid Bolt Stress Calculations

The formulas for the bolt stress calculations are described in Table 5.1 of [1].

2.13.2.4.1 Average Tensile Stress

The bolt preload is calculated to withstand the worst case load combination and to maintain a clamping (compressive) force on the closure joint under both normal and accident conditions. Based upon the load combination results (see Table 2.13.2-6), it is shown that a positive (compressive) load is maintained on the clamped joint for all load combinations (see Appendix 2.13.7 for impact loads).

The maximum non-prying tensile force for normal conditions is F_a = 51,094 lb, from load case 1.B (maximum torque preload + temperature load). The maximum non-prying tensile force for accident conditions is conservatively assumed to be F_a = 62,242 lb.

The average tensile stress caused by the tensile bolt force F_a is:

$$S_{ba} = 1.2732 \times \frac{F_a}{D_{ba}^2}$$

D_{ba} is the bolt diameter for tensile stress calculation: $D_{ba} = D_b - 0.9743 \times p$, where p is the pitch of the bolt[1]. According to Table 1 on page 1714 of [3], p = 0.1667 in. Therefore, D_{ba} = 1.3376 in. This value is conservatively used for all bolt stress calculations.

Normal conditions:

$$S_{ba} = 1.2732 \times \frac{51{,}094}{0.8782^2} = 84{,}347 \text{ psi}$$

Accident conditions:

$$S_{ba} = 1.2732 \times \frac{62{,}242}{0.8782^2} = 102{,}750 \text{ psi}$$

2.13.2.4.2 Bending Stress

The bending stress caused by the bending bolt moment M_{bb} is:

$$S_{bb} = 10.186 \times \frac{M_{bb}}{D_{ba}^3}$$

[1] For inch-series threads only; the coefficient is equal to 0.9382 for metric-series threads.

Normal conditions:

$$S_{bb} = 10.186 \times \frac{24.7}{0.8782^3} = 371\,\text{psi}$$

2.13.2.4.3 Shear Stress

For both normal and accident conditions, the average shear stress caused by shear bolt force F_s is:

$$S_{bs} = 0$$

The maximum shear stress caused by the torsional moment M_t is:

$$S_{bt} = 5.093 \times \frac{M_t}{D_{ba}^3}$$

For both normal and accident conditions:

$$S_{bt} = 5.093 \times \frac{2{,}700}{0.8782^3} = 20{,}302\,\text{psi}$$

2.13.2.4.4 Maximum Combined Stress Intensity

The maximum combined stress intensity is calculated in the following way ([1], Table 5.1):

$$S_{bi} = \sqrt{(S_{ba} + S_{bb})^2 + 4 \times (S_{bs} + S_{bt})^2}$$

For normal conditions, it combines tension, shear, bending, and residual torsion:

$$S_{bi} = \sqrt{(84{,}347 + 371.46)^2 + 4 \times (0 + 20{,}302)^2} = 93.94\,\text{ksi}$$

2.13.2.4.5 Stress Ratios

In order to meet the stress ratio requirement, the following relationship must hold for both normal and accident conditions:

$$R_t^2 + R_s^2 < 1$$

Where R_t is the ratio of average tensile stress to allowable average tensile stress F_{tb} and R_s is the ratio of average shear stress to allowable average shear stress F_{vb}.

For NCT:

$$R_t = \frac{S_{ba}}{F_{tb,NCT}} = \frac{84.34}{93.5} = 0.9020$$

$$R_s = \frac{S_{bt}}{F_{vb,NCT}} = \frac{20.30}{56.12} = 0.3618$$

$$R_t^2 + R_s^2 = 0.91^2 + 0.3618^2 = 0.944 < 1$$

For HAC:

$$R_t = \frac{S_{ba}}{F_{tb,HAC}} = \frac{102.75}{115.5} = 0.88$$

$$R_s = \frac{S_{bt}}{F_{vb,HAC}} = \frac{20.30}{69.3} = 0.29$$

$$R_t^2 + R_s^2 = 0.88^2 + 0.29^2 = 0.877 < 1$$

2.13.2.4.6 Bearing Stress Under Bolt Head

The maximum NCT axial force is 51,094 lb. A washer of outer diameter 2.50 in. is used. The diameter of the bolt hole is 1.13 in. Therefore, the bearing area is:

$$A = 0.25 \times \pi \times (2.50^2 - 1.13^2) = 3.906 \text{ in.}^2$$

Therefore, the bearing stress is:

$$\frac{51{,}094}{3.906} = 13.1 \text{ ksi}$$

The allowable normal condition bearing stress on the lid is taken to be the yield stress of the lid material at 300°F, which is 22.40 ksi.

2.13.2.5 Lid Bolt Results

A summary of the lid bolt stresses calculated above is listed in Table 2.13.2-7.

The calculated bolt stresses are all less than the specified allowable stresses.

2.13.2.6 Lid Bolt Fatigue Analysis

The purpose of the fatigue analysis is to show quantitatively that the fatigue damage to the lid bolts during NCT is acceptable. This is done by considering the fatigue damage factor for each NCT event. For this analysis it is assumed that the bolts are replaced after 75 round-trip shipments.

Since the bolt preload stress applied to the TN-LC cask lid bolts is higher than all of the other NCT condition loads, the stress in the bolts will never exceed the bolt preload stress. Consequently, the application and removal of preload is the only real cyclic loading that occurs in the lid bolts.

Assuming that the bolts are replaced after 75 round trips, the number of preload cycles is two times the number of trips, or 150 cycles. For each round trip, the cask will be with payload for one cycle (or one one-way trip) and the applied bolt torque is in the 400 - 450 ft-lb range.

For the loaded cask, the maximum normal condition bolt stress intensity (due to preload and temperature) is 93.94 ksi (Section 2.13.2.4.4) for 150 cycles.

It is shown below that this reduced preload stress is also higher than the rail shock or vibrations stresses.

2.13.2.6.1 Vibration/Shock

Since the TN-LC package will be shipped by truck or rail car, the bounding shock and vibration loadings are considered.

Rail car shock:

Reference [5] specifies a peak shock loading of 4.7 g in the longitudinal direction for rail car transport. Consequently, the bolt force due to rail car shock is:

$$\frac{(8{,}000 + 1{,}119\ \text{lb}) \times (4.7\ \text{g})}{(20\ \text{bolts}) \times (0.6058\ \text{in}^2\ \text{per bolt})} = 3{,}538\ \text{psi}$$

Rail car vibration:

According to [4], the peak vibration load on the deck of a rail car in the longitudinal direction is 0.19 g. This results in a stress of less than 143 psi, which is negligible for a high-strength bolt.

2.13.2.6.2 Damage Factor Calculation

The damage factors are computed in Table 2.13.2-8 and are based on the stresses and cyclic history described above, a fatigue strength reduction factor K_F of 4, and the fatigue curve shown in Table I-9.4 and tabulated in Table I-9.1 of [2] (for Maximum Nominal Stress MNS = 93.9 ksi $\leq 2.7 \times S_m = 2.7 \times 45.5 = 122.85$ ksi).

Here, n is the number of cycles, N is taken from Figure I-9.4 of [2], and S_a is defined in the following way:

If one cycle goes from 0 to +S.I., then $S_a = 0.5 \times S.I. \times K_F \times K_E$.

If one cycle goes from -S.I to +S.I., then $S_a = S.I. \times K_F \times K_E$.

Where K_E is the correction factor for modulus of elasticity:

$$K_E = \frac{30 \times 10^6}{26.45 \times 10^6} = 1.13$$

Since the total damage factor is less than one, the TN-LC cask lid bolts will not fail due to fatigue.

2.13.2.7 Bottom Plug Bolt Fatigue Analysis

The maximum preload stress intensity is equal to 88.9 ksi (Section 2.13.2.9.5).

Based on the stress cycle (between maximum stress and 0) and a fatigue strength reduction factor K_F of 4, allowable fatigue cycles are calculated using the fatigue curve shown in Figure I–9.4 and tabulated in Table I–9.1 of [2] for Maximum Nominal Stress
$= 88.9 \text{ ksi} \leq 2.7 \times Sm = 2.7 \times 45.5 = 122.85$ ksi.

The maximum alternating stress intensity is $Sa = 0.5 \times S.I. \times KF \times KE$.

$Sa = 0.5 \times 88.9 \times 4.0 \times 1.13 = 200.9$ ksi.

The number of allowable fatigue cycles is equal to 200. Conservatively it is assumed as 150 cycles. Therefore, Bottom Plug bolts have a fatigue life of 75 cask trips.

2.13.2.8 Minimum Engagement Length for Bolt and Flange

For the 1-8UNC bolt, the material is SA-540, Grade B23 Class 1, which has a tensile strength of 165.0 ksi at 300°F. The flange material is SA-182, Grade FXM19, with tensile strength of 94.20 ksi at 300°F.

The minimum engagement length L_e for the bolt and flange is ([3], page 1490):

$$L_e = \frac{2 \times A_t}{3.1416 \times K_{n\,max} \times \left[\frac{1}{2} + .57735 \times n \times \left(E_{s,min} - K_{n\,max}\right)\right]}$$

A_t is the tensile-stress area of the screw and is given by the following formula:

$$A_t = \pi \times \left(\frac{E_{s,min}}{2} - \frac{0.16238}{n}\right)^2$$

According to [3]:

n = number of threads per in. = 8.

$E_{s,min}$ = minimum pitch diameter of external threads = 0.9067 in.

Therefore, $A_t = 0.589$ in^2.

$K_{n\,max}$ = maximum minor diameter of internal threads = 0.8900 in.

$D_{s\,min}$ = minimum major diameter of external threads = 0.9755 in.

Substituting the values given above:

$$L_e = \frac{2 \times 0.589}{3.1416 \times 0.8900 \times \left[\frac{1}{2} + .57735 \times 8 \times (0.9067 - 0.8900)\right]} = 0.73 \text{ in.}$$

According to [3], page 1490:

$$J = \frac{A_s \times S_{ue}}{A_n \times S_{ui}}$$

Where S_{ue} is the tensile strength of external thread material, and S_{ui} is the tensile strength of internal thread material. Therefore, S_{ue} = 165 ksi and S_{ui} = 94.2 ksi.

A_s is the shear area of external threads:

$$A_s = 3.1416 \times n \times L_e \times K_{n\,max} \times \left[\frac{1}{2n} + 0.57735 \times \left(E_{s\,min} - K_{n\,max}\right)\right]$$

A_n is the shear area of internal threads:

$$A_n = 3.1416 \times n \times L_e \times D_{s\,min} \times \left[\frac{1}{2n} + 0.57735 \times \left(D_{s\,min} - E_{n\,max}\right)\right]$$

For the bolt / flange insert connection:

$E_{n\,max}$ = maximum pitch diameter of internal threads = 0.9320 in.(see [3], page 1728).

Therefore:

$$A_s = 3.1416 \times 8 \times 0.73 \times 0.8900 \times \left[\frac{1}{2 \times 8} + 0.57735 \times \left(0.9067 - 0.8900\right)\right] = 1.178\,\text{in.}^2$$

$$A_n = 3.1416 \times 8 \times 0.73 \times 0.9755 \times \left[\frac{1}{2 \times 8} + 0.57735 \times \left(0.9755 - 0.9320\right)\right] = 1.569\,\text{in.}^2$$

So:

$$J = \frac{1.178 \times 165.0}{1.569 \times 94.2} = 1.316$$

Therefore, the minimum required engagement length $Q = J \times L_e = 1.316 \times 0.73 = 0.961$ in.

The actual minimum engagement length is equal to:

4.00 (bolt length) - 2.07 (thickness of the closure lid under the screw head) - 0.13 (washer thickness) = 1.80 in. > 1.75 in. (length of lid bolt insert) > 0.961in.

The above calculation bounds the minimum required engagement length if inserts are used because S_u of the inserts is higher than the S_u for the lid, thus lowering the J value.

2.13.2.9 Bottom Plug Bolt Analysis

This section analyzes the ability of the bottom plug bolts to maintain a leak-tight seal under events defined by Normal Conditions of Transport (NCT) and the Hypothetical Accident Conditions (HAC). Also evaluated in this section are the stresses in the bolt threads and in the internal threads. The stress analysis is performed in accordance with NUREG/CR-6007 [1].

The bottom plug assembly has a diameter of 6.75 in. and is assembled in a manner such that a plug of lead (thickness 6.0 in.) is sandwiched between two steel plates of thickness 0.812 in. and 0.188 in., respectively. The thickness of the outer flange is 1.00 in. Since lead is comparatively softer than steel, the thickness of the center part of the plug is conservatively taken as 0.812+0.188 = 1.00 in.

The bottom plug is bolted directly to the bottom flange by 8 high-strength alloy steel 1/2-13 UNC bolts on a 5.5-in. diameter bolt circle.

The bolts material is SA-540 Grade B23 Class 1 which has a yield strength of 140.3 ksi and a tensile strength of 165.0 ksi at 300°F.

The following evaluations are made in this section:

- Bolt preload
- Gasket seating load
- Internal pressure loads
- Temperature load
- Impact load
- Puncture load
- External pressure loads
- Load combinations for normal and accident conditions
- Bolt stresses and allowable stresses
- Thread engagement length evaluation
- Bearing stress

The design parameters for the bottom plug analysis taken from [1] are summarized in Table 2.13.2-1. The bottom plug bolt data and material allowables are presented in Table 2.13.2-2 to Table 2.13.2-4. A temperature of 300°F is used in the bolts region during NCT and HAC based on results of thermal analyses.

The following load cases are considered in the analysis:

1. Preload + Temperature Load (NCT),
2. Internal Pressure + 30-Foot Corner Drop (HAC),
3. Internal Pressure + Puncture Load (HAC).

2.13.2.9.1 Bolt Load Calculations

Bolt Preload

The method of analysis is described in Table 4.1 of [1].

A bolt torque range of 40 to 48 ft-lb is required to ensure leak tightness against normal and accident loadings.

Bolt Preload for the maximum torque is:

$$F_a = \frac{Q}{K \times D_b} = \frac{48 \times 12}{0.135 \times 0.5} = 8{,}533 \text{ lb/bolt}$$

Residual torsional moment for the minimum torque is:

$$M_{tr} = 0.5 \times Q = 0.5 \times 40 \times 12 = 240 \text{ in.lb/bolt}$$

Residual torsional moment for the maximum torque is:

$$M_{tr} = 0.5 \times Q = 0.5 \times 48 \times 12 = 288 \text{ in.lb/bolt}$$

Residual tensile bolt force:

$$F_{ar} = F_a = 8{,}533 \text{ lb/bolt}$$

Gasket Seating Load

An elastomer O-ring is used, therefore the gasket seating load is negligible, and $F_s = 0$.

Internal Pressure Load

The analysis is described in Table 4.3 of [1].

The axial force per bolt due to internal pressure is:

$$F_a = \frac{\pi \times D_{lg}^2 \times (P_{li} - P_{lo})}{4N_b}$$

D_{lg} for outer seal is 4.188 in.

Therefore:

$$F_a = \frac{\pi \times 4.188^2 \times (30-0)}{4 \times 8} = 52 \text{ lb/bolt}$$

The fixed edge cover plate force is:

$$F_f = \frac{D_{lb} \times (P_{li} - P_{lo})}{4} = \frac{5.5 \times (30-0)}{4} = 41 \text{ lb/in.}$$

The fixed edge cover plate moment is:

$$M_f = \frac{(P_{li} - P_{lo}) \times D_{lb}^2}{32} = \frac{30 \times 5.5^2}{32} = 28 \text{ in.lb/in.}$$

The cask bottom wall takes the shear force, so the shear bolt force per bolt F_s is 0.

Temperature Load

The analysis is described in Table 4.4 of [1].

The bottom plate bolt material is SA-540 Grade B23 Class 1, the cask bottom forging is made of SA-182, Grade FXM19, and the bottom cover plate and bottom plug plates are made of SA-240, Type 304.

The initial temperature of the cask body is assumed to be at room temperature (70°F) and final temperature is assumed to be 300°F.

The axial force per bolt due to the thermal expansion difference between the bottom plate and bolt is:

$$F_a = 0.25 \times \pi \times D_b^2 \times E_b (\alpha_1 T_1 - \alpha_b T_b)$$

D_b for the bolt = 0.50 in., therefore:

$$F_a = 0.25 \times \pi \times 0.5^2 \times 26.7 \times 10^6 \times (9.20 - 6.9) \times 10^{-6} \times (300 - 70)$$
$$F_a = 2{,}774 \text{ lb/bolt}$$

The shear force per bolt due to the thermal expansion difference between the bottom plate and cask walls is:

$$F_s = \frac{\pi \times E_p \times t_p \times D_{lb} \times (\alpha_p T_p - \alpha_c T_c)}{N_{bp} \times (1 - N_{up})} = 9{,}580 \text{ lb/bolt}$$

Conservatively, if we assume that the bolt hole in the lid will shrink because of thermal expansion, the reduced diameter will be:

$$D' = D - D\alpha\Delta T = 0.57\text{-}0.57 \times 9.2 \times 10^{-6} \times (300\text{-}70) = 0.568 \text{ in.}$$

The reduced diameter of the bolt hole is greater than the diameter of the bolt (0.5 in.), thus there will not be any shear force due to thermal gradient between cover and the cask walls. Therefore, $F_s = 0$.

Impact Load

The analysis is described in Tables 4.5 and 4.6 of [1].

The non-prying tensile bolt force per bolt, F_a, is:

$$F_a = \frac{1.34 \times \sin(xi) \times DLF \times ai \times (W_l + W_c)}{N_b}$$

The drop angle xi is 74.14°. Only the accident conditions drop is considered in this Appendix. The acceleration conservatively taken to be ai is 70 g for the accident conditions. DLF of 1.5 (conservative) from Appendix 2.13.9 is used.

Only the weight of the bottom plug W_p is considered since the contents of the cask do not weigh on the plate.

The maximum weight of the bottom plug is 17.3 lb, however, the weight of the plug assembly is conservatively taken equal to 20 lb.

$$F_a = \frac{1.34 \times \sin(74.14°) \times 1.5 \times 70 \times 20}{8} = 338 \text{ lb/bolt}$$

The gap between the bottom plug and the hole in the bottom flange is (2.00 - 1.94) = 0.06 in., whereas the gap between the bottom plug bolts and the bottom plug plate holes is (0.57 - 0.5) = 0.07 in. Since the gap between the bottom plug and the hole in the bottom flange is smaller than the gap between the bottom plug bolts and the holes in the bottom plug plate, during a side drop, the bottom plug comes into contact with the bottom flange before the bottom plug bolts are loaded in shear, and the bottom flange takes the shear force during these drops. Therefore, $F_s = 0$.

The fixed-edge closure lid force F_f is:

$$F_f = \frac{1.34 \times \sin(xi) \times DLF \times ai \times W_p}{\pi \times D_{lb}}$$

$$F_f = \frac{1.34 \times \sin(74.14) \times 1.5 \times 70 \times 20}{\pi \times 5.5} = 157 \text{ lb/in.}$$

The fixed-edge closure lid moment M_f is:

$$M_f = \frac{1.34 \times \sin(xi) \times DLF \times ai \times W_p}{8\pi}$$

$$M_f = \frac{1.34 \times \sin(74.14) \times 1.5 \times 70 \times 20}{8\pi} = 108 \text{ in - lb/in.}$$

Puncture Load

Impact limiters are assumed to protect the ends of the cask body and to absorb the puncture load energy to such an extent that no indirect prying force is generated by the 6-in. diameter puncture bar.

External Pressure Load (Immersion)

The analysis is described in Table 4.3 of [1].

The pressure outside the cask in the immersion case is assumed to be 290 psig and the pressure inside the cask is conservatively taken to 0 psig.

The axial force per bolt due to external pressure is:

$$F_a = \frac{\pi \times D_{lg}^2 \times (P_{li} - P_{lo})}{4N_b}$$

D_{lg} for the outer seal (conservatively taken equal to the outer diameter of the outer seal groove) is 4.188 in. Therefore:

$$F_a = \frac{\pi \times 4.188^2 \times (0 - 290)}{4 \times 8} = -499 \text{ lb/bolt}$$

Since this force is negative (inward acting), the actual resulting bolt force $F_a = 0$ because the applied load is supported by the bottom flange and not by the bolts.

The fixed edge bottom plug assembly force is:

$$F_f = \frac{D_{lb} \times (P_{li} - P_{lo})}{4} = \frac{5.50 \times (0 - 290)}{4} = -399 \text{ lb/in.}$$

The fixed edge bottom plug assembly moment is:

$$M_f = \frac{(P_{li} - P_{lo}) \times D_{lb}^2}{32} = \frac{(0 - 290) \times 5.50^2}{32} = -274 \text{ in - lb/in.}$$

The bottom plug shoulder takes the shear force, so the shear bolt force per bolt is $F_s = 0$.

The loads calculated in this section are summarized in Table 2.13.2-9.

2.13.2.9.2 Load Combinations

A summary of normal and accident condition load combinations is presented in Table 2.13.2-10. The method used for the following combination is taken from [1], Table 4.9.

Additional Prying Bolt Force

The analysis is described in Table 2.1 of [1].

Although the methodology developed in [1] applies to full cover plates that extend to the entire diameter of the cask, it can also be applied to the bottom plug analyzed in this calculation, even though its bolt diameter does not extend all the way to the cask walls. The contents of the cask provide the bottom part of the cask with a rigid seating surface, rigid enough to consider that the bottom plug is bolted on the walls of a thick cylindrical shell, the inner diameter of which is the diameter of the bottom plug opening through the cask bottom.

Since the prying forces applied act inward, normal to the bottom plug, an additional prying bolt force, F_{ap}, is generated (Table 2.1 of [1]). The additional force generated for the outward loadings is considered negligible since its main source, the contents of the cask, cannot be in contact with the bottom plug.

The bolt length between the top and bottom surfaces of the bottom plug/cover plate is:

$$L_b = 1.00\,(\text{plug/cover plate thickness}) - .03\,(\text{gap}) - [0.63\,(\text{counter bore}) - .0625\,(\text{washer})] = 0.4025\,\text{in.}$$

F_{ap} for an inward force is calculated in the following way:

$$F_{ap} = \frac{\pi \times D_{lb}}{N_b} \times \left[\frac{\frac{2 \times M_f}{D_{li} - D_{lb}} - C_1 \times (B - F_f) - C_2 \times (B - P)}{C_1 + C_2} \right]$$

Where $C_1 = 1$, and:

$$C_2 = \frac{8}{3 \times (D_{li} - D_{lb})^2} \frac{L_b}{N_b \times D_b^2 \times E_b} \left[\frac{E_l \times t_l^3}{1 - N_{ul}} + \frac{(D_{lo} - D_{li}) \times E_{lf} \times t_{lf}^3}{D_{lb}} \right]$$

$$C_2 = \frac{8}{3 \times (4.00 - 5.50)^2} \frac{0.4025 \times 27.00 \times 10^6}{8 \times 0.5^2 \times 26.70 \times 10^6} \left[\frac{1.0^3}{1 - 0.3} + \frac{(6.75 - 4.00) \times 1.0^3}{5.5} \right]$$

$$C_2 = 0.4652$$

B is the non-prying tensile bolt force, and P is the bolt preload; both are derived from the load applied to each bolt in normal operating conditions (bolt preload + temperature load + internal pressure load). Conservatively, the fixed-edge closure lid moment is considered for the case of the external pressure load, for which M_f = -274 in.-lb/in./bolt.

$$P = \frac{F_a \times N_b}{\pi \times D_{lb}} = \frac{11{,}359 \times 8}{\pi \times 5.5} = 5{,}259 \text{ lb/in.}$$

For all inward loadings such as the external pressure load, F_f is supported by the cask bottom flange and thus has no effect on either the non-prying or prying bolt forces, B and R. Therefore, $F_f = 0$.

$B = F_f$ if $F_f > P$ and $B = P$ otherwise. Since $F_f = 0 < P$, $B = P = 5{,}259$ lb/in.

Furthermore, the internal pressure load is not included because it decreases the magnitude of the applied prying moment, which is less conservative.

Therefore:

$$F_{ap} = \frac{\pi \times 5.50}{8} \times \left[\frac{\frac{2 \times (-274)}{4.00 - 5.50} - 1 \times (5{,}259 - 0) - 0.4652 \times (5{,}259 - 5{,}259)}{1 + 0.4652} \right].$$

$$F_{ap} = -\ 7{,}214 \text{ lb/bolt}$$

Since this bolt load is less than the load generated by the minimum bolt preload, the prying force generated by the external pressure load is not critical with respect to bolt stress, and will not result in loss of the cover plate closure seal.

Bending Moment Bolt Force

The analysis is described in Table 2.2 of [1].

The maximum bending bolt moment M_{bb} generated by the applied load is evaluated as follows:

$$M_{bb} = \frac{\pi \times D_{lb}}{N_b} \frac{K_b}{K_b + K_l} \times M_f$$

The coefficients K_b and K_l are based on geometry and material properties and are defined in Table 2.2 of [1]. By substituting the values given above:

$$K_b = \frac{N_b}{L_b} \frac{E_b}{D_{lb}} \frac{D_b^4}{64} = \frac{8}{0.4025} \frac{26.70 \times 10^6}{5.50} \frac{0.5^4}{64} = 9.423 \times 10^4$$

$$K_1 = \frac{E_1 \times t_1^3}{3\left[\left(1-N_{ul}^2\right)+\left(1-N_{ul}\right)^2\left(\frac{D_{lb}}{D_{lo}}\right)^2\right]D_{lb}} = \frac{27.00\times10^6\times1.00^3}{3\left[\left(1-0.3^2\right)+\left(1-0.3\right)^2\left(\frac{5.50}{6.75}\right)^2\right]5.50} = 1.325\times10^6$$

In the case of the Internal Pressure, $M_f = 28$ in.-lb. Therefore:

$$M_{bb} = \frac{\pi\times5.50}{8}\times\frac{9.423\times10^4}{9.423\times10^4+1.325\times10^6}\times28 = 4.1\,\text{in.-lb/bolt}$$

The maximum bending bolt moment is considered equal to 0.

2.13.2.9.3 Bolt Stress Calculations

The analysis is described in Table 5.1 of [1].

Average Tensile Stress

The bolt preload is calculated to withstand the worst case load combination and to maintain a clamping (compressive) force on the closure joint, under both normal and accident conditions. Based upon the load combination results (see Table 2.13.2-10), it is shown that a positive (compressive) load is maintained on the clamped joint for all load combinations.

The maximum non-prying tensile force for both normal and accident conditions is $F_a = 11{,}307$ lbs, from load case 1.B (maximum torque preload + temperature load).

The average tensile stress caused by the tensile bolt force F_a is:

$$S_{ba} = 1.2732\times\frac{F_a}{D_{ba}^2}$$

D_{ba} is the bolt diameter for tensile stress calculation: $D_{ba} = D_b - 0.9743 \times p$, where p is the pitch of the bolt. According to Table 1, page 1714 of [3], p = 0.07692 in. Therefore, $D_{ba} = 0.42505$ in. This value is conservatively used for all bolt stress calculations.

$$S_{ba} = 1.2732\times\frac{11{,}307}{0.42505^2} = 79{,}684\,\text{psi}$$

Bending Stress

The bending stress caused by the bending bolt moment M_{bb} is:

$$S_{bb} = 10.186\times\frac{M_{bb}}{D_{ba}^3}$$

$$S_{bb} = 10.186 \times \frac{4.1}{0.42505^3} = 540 \text{ psi}$$

Shear Stress

For both normal and accident conditions, the average shear stress caused by shear bolt force F_s is:

$$S_{bs} = 0.$$

The maximum shear stress caused by the torsional moment M_t is:

$$S_{bt} = 5.093 \times \frac{M_t}{D_{ba}^3}$$

For both normal and accident conditions:

$$S_{bt} = 5.093 \times \frac{288}{0.42505^3} = 19{,}100 \text{ psi}$$

Maximum Combined Stress Intensity

The maximum combined stress intensity is calculated as follows:

$$S_{bi} = \sqrt{(S_{ba} + S_{bb})^2 + 4 \times (S_{bs} + S_{bt})^2}$$

For normal conditions, it combines tension, shear, bending, and residual torsion:

$$S_{bi} = \sqrt{(79{,}684 + 540.0)^2 + 4 \times (0 + 19{,}100)^2} = 88.9 \text{ ksi}$$

Stress Ratios

In order to meet the stress ratio requirement, the following relationship must hold for both normal and accident conditions:

$$R_t^2 + R_s^2 < 1$$

Where R_t is the ratio of average tensile stress to allowable average tensile stress F_{tb} and R_s is the ratio of average shear stress to allowable average shear stress F_{vb}.

For normal conditions:

$$R_t = \frac{S_{ba}}{F_{tb,NCT}} = \frac{79.7}{93.5} = 0.852,$$

$$R_s = \frac{S_{bt}}{F_{vb,NCT}} = \frac{19.1}{56.1} = 0.340,$$

$$R_t^2 + R_s^2 = 0.852^2 + 0.340^2 = 0.842 < 1.$$

For accident conditions:

$$R_t = \frac{S_{ba}}{F_{tb,HAC}} = \frac{79.7}{115.5} = 0.69,$$

$$R_s = \frac{S_{bt}}{F_{vb,HAC}} = \frac{19.1}{69.3} = 0.275,$$

$$R_t^2 + R_s^2 = 0.69^2 + 0.275^2 = 0.552 < 1.$$

2.13.2.9.4 Bearing Stress Under Bolt Head

The maximum axial force is 11,307 lb for normal conditions. A washer with an outer diameter of 1.00 in. is used. The diameter of the bolt hole is 0.57 in.

The bearing area is $0.25 \times \pi \times (1.00^2 - 0.57^2) = 0.530$ in.^{2}.

Therefore, the bearing stress is:

$$\frac{11{,}307}{0.530} = 21.3 \text{ ksi}$$

The allowable normal condition bearing stress on the bottom plug is taken to be the yield stress of the bottom flange material at 300°F, 22.40 ksi.

2.13.2.9.5 Results

A summary of the bottom plug bolt stresses calculated above is listed in Table 2.13.2-7.

The calculated bolt stresses are all less than the specified allowable stresses.

2.13.2.9.6 Minimum Engagement Length for Bolt and Flange

The minimum engagement length L_e for the bolt and flange is ([3], page 1490):

$$L_e = \frac{2 \times A_t}{3.1416 \times K_{n\,max} \times \left[\frac{1}{2} + .57735 \times n \times \left(E_{s,min} - K_{n\,max}\right)\right]}$$

A_t is the tensile-stress area of the screw and is given by the following formula[2]:

$$A_t = \pi \times \left(\frac{E_{s,min}}{2} - \frac{0.16238}{n} \right)^2$$

According to [3]:

n = number of threads per in. = 13.

$E_{s,min}$ = minimum pitch diameter of external threads = 0.4411 in.

Therefore, A_t = 0.136 in.^{2}.

$K_{n\,max}$ = maximum minor diameter of internal threads = 0.4340 in.

$D_{s\,min}$ = minimum major diameter of external threads = 0.9755 in.

Substituting the values given above:

$$L_e = \frac{2 \times 0.136}{3.1416 \times 0.434 \times \left[\frac{1}{2} + .57735 \times 13 \times (0.4411 - 0.4340) \right]} = 0.361 \text{ in.}$$

According to [3], page 1490:

$$J = \frac{A_s \times S_{ue}}{A_n \times S_{ui}}$$

Where S_{ue} is the tensile strength of external thread material, and S_{ui} is the tensile strength of internal thread material, S_{ue} = 165.0 ksi and S_{ui} = 94.2 ksi.

A_s is the shear area of external threads:

$$A_s = 3.1416 \times n \times L_e \times K_{n\,max} \times \left[\frac{1}{2n} + 0.57735 \times (E_{s\,min} - K_{n\,max}) \right]$$

A_n is the shear area of internal threads:

$$A_n = 3.1416 \times n \times L_e \times D_{s\,min} \times \left[\frac{1}{2n} + 0.57735 \times (D_{s\,min} - E_{n\,max}) \right]$$

[2] Formula valid if the ultimate tensile strength of the screw is over 100,000 psi.

For the bolt / flange insert connection:

$E_{n\,max}$ = maximum pitch diameter of internal threads = 0.4597 in.(see [3], page 1728).

Therefore:

$$A_s = 3.1416 \times 13 \times 0.361 \times 0.4340 \times \left[\frac{1}{2 \times 13} + 0.57735 \times (0.4411 - 0.4340)\right] = 0.272\,\text{in.}^2$$

$$A_n = 3.1416 \times 13 \times 0.361 \times 0.4822 \times \left[\frac{1}{2 \times 13} + 0.57735 \times (0.4822 - 0.4597)\right] = 0.365\,\text{in.}^2$$

So:

$$J = \frac{0.272 \times 165.0}{0.365 \times 94.2} = 1.304$$

Therefore, the minimum required engagement length $Q = J \times L_e = 1.304 \times 0.36 = 0.47$ in.

The actual minimum engagement length is equal to:

1.50 (bolt length) - 0.4025 (thickness of the cover plate under the screw head) - (1/16) (washer thickness) = 1.035 in. > 0.85 in. (bottom plug cover plate bolts inserts) > 0.47 in.

The above calculation bounds the minimum required engagement length if inserts are used because the S_u of inserts is higher than the S_u for the lid, thus lowering the J value.

2.13.2.10 Conclusions

A lid bolt torque range of 400 to 450 ft-lb is required. A bottom plug bolt torque range of 40 to 48 ft-lb is required. Bolt preload withstand the worst load combination and maintain a clamping (compressive) force on the closure joint for both normal and accident conditions. The bolt and flange thread engagement lengths are acceptable. Also cask lid and bottom plug bolts will not fail due to fatigue for 75 round-trip shipments.

2.13.2.11 References

1. Stress Analysis of Closure Bolts for Shipping Casks, NUREG/CR-6007.

2. American Society of Mechanical Engineers, ASME Boiler and Pressure Vessel Code, Section III, Appendices, 2004 edition including 2006 addenda.

3. Machinery Handbook, 26th Edition, Industrial Press, 2000.

4. Shock and Vibration Environments for Large Shipping Containers on Rail Cars and Trucks, NUREG 766510.

5. ANSI, Design Basis for Resistance to Shock and Vibration of Radioactive Material Packages Greater than One Ton in Truck Transport, Draft American National Standard, N14.23, 1980.

Table 2.13.2-1
Design Parameters for Bolts Analysis

	Parameter	Lid	Bottom Plug Access Cover Plate
α_b	Thermal coefficient of expansion of the bolts (in./in./°F)	6.9×10^{-6}	
α_c, α_l	Thermal coefficients of expansion of the cask walls and flanges (in./in./°F)	8.7×10^{-6}	
α_c, α_l	Thermal coefficients of expansion of the closure lid and bottom plug cover plate (in./in./°F)	9.2×10^{-6}	
ai	Maximum rigid-body impact acceleration of the cask for Hypothetical Accident Conditions – 30-ft C. G. over corner drop (g)	70	
xi	Impact angle between the cask axis and target surface for Hypothetical Accident Conditions – 30-ft C. G. over corner drop	74.14°	
D_b	Nominal diameter of closure bolt (in.)	1.00	0.50
D_{lb}	Bolt circle diameter (in.)	23.25	5.50
D_{lg}	Outer seal diameter (in.)	21.25	4.188
D_{li}	Inner edge diameter (in.)	18.20	4.00
D_{lo}	Outer edge diameter (in.)	26.25	7.00
D_{pb}	Puncture bar diameter (in.)	6.0	
DLF	Dynamic Load Factor	1.5	
E_b	Young's modulus of bolt material (ksi) at 300° F	26.70×10^3	
E_c, E_l	Young's modulus of cask flange, cask bottom, closure lid and bottom plug cover plate material (ksi) at 300° F	27.00×10^3	
K	Nut factor for empirical relation between applied torque and achieved preload	0.135	
L_b	Bolt length between top and bottom surfaces of cover plate at bolt circle (in.)	2.07	1.01
N_b	Total number of closure bolts	20	8
N_{ul}	Poisson's ratio of cover plates	0.3	
P_{li}	Pressure inside the cask (psig)	30	
P_{lo}	Pressure outside the cask (psig)	290	
Q	Applied preload bolt torque (ft-lb)	400-450	40-48
S_{ub}	Ultimate strength of bolt material (ksi)	165.0	
S_{ul}	Ultimate strength of cover plates material (ksi)	66.20	
S_{yb}	Yield strength of bolt material (ksi)	140.3	
S_{yl}	Yield strength of cover plates material (ksi)	22.40	
t_c	Thickness of cask wall (in.)	6.0	
t_l	Thickness of plates at center (in.)	3.5	1.00
t_{lf}	Thickness of flange (in.)	3.5	1.00
W_c	weight of contents (lb)	8,000	N/A
W_l	weight of plate (lb)	818	20

Table 2.13.2-2
Bolt Data

Parameters necessary to use formulas of reference [1], Table 5.1.

Bolt: 1-8UNC-2A
n = number of threads per in. = 8
p = pitch = 1/8 = 0.125 in.
D_b = nominal diameter = 1.0 in.
D_{ba} = bolt diameter for tensile stress calculation = D_b - 0.9743 × p = 0.8782 in.

Table 2.13.2-3
Allowable Stresses in Closure Bolts for Normal Conditions

(Bolt Material: SA-540 Grarde 23 Class 1)

Temperature (°F)	**Yield Stress[1] (ksi)**	**Normal Condition Allowable Stresses (ksi)**		
		F_{tb}[2,3]	**F_{vb}[3,4]**	**S.I.[5]**
300	140.3	93.5	56.1	126.3

Notes:
1. Yield stress values are from ASME Code [2].
2. Allowable tensile stress: $F_{tb} = 2/3\ S_y$ ([1]).
3. Allowable shear stress: $F_{vb} = 0.4\ S_y$ ([1]).
4. Tension and shear stresses must be combined using the following interaction equation:
   $$\frac{\sigma_{tb}^2}{F_{tb}^2} + \frac{\tau_{yb}^2}{F_{yb}^2} \leq 1.0 \text{ [1].}$$
5. Stress intensity from combined tensile, shear and residual torsion loads: S.I. ≤ 0.9 S_y ([1], Table 6.1).

Table 2.13.2-4
Allowable Stresses in Closure Bolts for Accident Conditions

(Bolt Material: SA-540 Grade 23 Class 1)

Temperature (°F)	**Yield Stress[1] (ksi)**	**Accident Condition Allowable Stresses (ksi)**		
		0.6 S_y	**F_{tb}[2]**	**F_{vb}[3]**
300	140.3	84.2	115.5	69.3

Notes:
1. Yield and tensile stress values are from ASME Code [2], note that S_u = 165 ksi at all temperatures of interest.
2. Allowable Tensile stress, F_{tb} = MINIMUM(0.7 S_u, S_y), where S_u = 165 ksi [1].
3. Allowable shear stress, F_{vb} = MINIMUM(0.42 S_u, 0.6 S_y), where S_u = 165 ksi [1].

Table 2.13.2-5
Lid Bolts Individual Summary

Load Case	**Applied Load**		**Non-Prying Tensile Force F_a (lb/bolt)**	**Torsional Moment M_t (in.-lb/bolt)**	**Prying Force F_f (lb/in.)**	**Prying Moment M_f (in.-lb/in.)**
Preload	Residual torque	Minimum	35,556	2,400	0	0
		Maximum	40,000	2,700	0	0
Gasket	Seating load		0	0	0	0
Internal Pressure	30 psig internal		532	0	175	507
Thermal	300°F		11,094	0	0	0
Puncture	Drop on six in. diameter rod		0	0	0	0
External pressure	290 psig external		0	0	-1,686	-4,899

Table 2.13.2-6
Lid Bolts Normal and Accident Load Combinations

Load Case	Combination Description		Non-Prying Tensile Force F_a (lb/bolt)	Torsional Moment M_t (in.-lb/bolt)	Prying Force F_f (lb/in.)	Prying Moment M_f (in.-lb/in.)
1	Preload + Temperature (Normal Conditions)	A. Min. Torque	46,650	2,400	0	0
		B. Max. Torque	51,094	2,700	0	0
2	Pressure + Puncture (Accident Conditions)		0	0	-1,686	-4,899

Table 2.13.2-7
Lid and Bottom Plug Closure Plate Bolt Stresses

	Stress Type	NCT		HAC	
		Stress	Allowable	Stress	Allowable
Lid Bolts	Average Tensile	84.34	93.5	102.75	115.5
	Shear	20.3	56.1	20.3	69.3
	Combined	93.94	126.3	Not Required [1]	
	Interaction E.Q. $R_t^2 + R_s^2 < 1$	0.945	1	0.877	1
	Bearing	13.1	22.4	Not Required [1]	
Bottom Plug Cover Plates Bolts	Average Tensile	79.7	93.5	79.7	115.5
	Shear	19.1	56.1	19.1	69.3
	Combined	88.9	126.3	Not Required [1]	
	Interaction E.Q. $R_t^2 + R_s^2 < 1$	0.842	1	0.55	1
	Bearing	21.3	22.4	Not Required [1]	

Table 2.13.2-8
Damage Factor Calculation

Event	Stress Intensity (ksi)	S.I. × K_F (ksi)	S_a (ksi)	Cycles		Damage Factor n / N
				n	N	
Operating preload Loaded Cask	93.9	376	220	75	200	0.375
Operating preload Empty Cask	93.9	376	220	75	200	0.375
Σ						0.75

Table 2.13.2-9
Bottom Plug Closure Plate Bolts Individual Summary

Load Case	Applied Load		Non-Prying Tensile Force F_a (lb/bolt)	Torsional Moment M_t (in.-lb/bolt)	Prying Force F_f (lb/in.)	Prying Moment M_f (in.-lb/in.)
Preload (P)	Residual torque	Minimum	7,111	240	0	0
		Maximum	8,533	288	0	0
Gasket (G)	Seating load		0	0	0	0
Internal Pressure (Pi)	30 psig internal		52	0	41	28
Thermal (T)	300°F		2,774	0	0	0
Impact (I)	30 ft accidental conditions drop		338	0	157	108
Puncture (Pu)	Drop on six in. diameter rod		0	0	0	0
External pressure (Pe)	290 psig external		0	0	-399	-274

Table 2.13.2-10
Bottom Plug Closure Plate Bolts Normal and Accident Load Combinations

Load Case	Combination Description		Non-Prying Tensile Force F_a (lb/bolt)	Torsional Moment M_t (in.-lb/bolt)	Prying Force F_f (lb/in.)	Prying Moment M_f (in.-lb/in.)
1.NCT P+T	Preload + Temperature	A. Min. Torque	9,885	240	0	0
		B. Max. Torque	11,307	288	0	0
2.HAC (Pi+I)	Internal Pressure + Impact		390	0	198	136
3.HAC (P_e)	External Pressure		0	0	-399	-274

Appendix 2.13.3
TN-LC Cask Lead Slump and Containment Boundary Buckling Analysis

TABLE OF CONTENTS

2.13.3.1 Introduction 2.13.3-1
2.13.3.2 Finite Element Model 2.13.3-2
2.13.3.3 Material Properties 2.13.3-3
2.13.3.4 Loading and Boundary Conditions 2.13.3-4
2.13.3.5 FEA Results 2.13.3-5
2.13.3.6 Conclusions 2.13.3-6
2.13.3.7 References 2.13.3-7

LIST OF TABLES

Table 2.13.3-1 Element Specifications in Finite Element Model (Except Contact Elements) 2.13.3-8
Table 2.13.3-2 Elements Specifications in Finite Element Model (Contact Elements) 2.13.3-9
Table 2.13.3-3 Summary of Lead Slump at 95g End Drop 2.13.3-11

LIST OF FIGURES

Figure 2.13.3-1 Schematic of the TN-LC Cask - 3D FEA Model ANSYS Elements 2.13.3-12
Figure 2.13.3-2 Schematic for Lid End Drop 2.13.3-13
Figure 2.13.3-3 Schematic for Bottom End Drop 2.13.3-14
Figure 2.13.3-4 Boundary Condition & Loads for Lid End Drop 2.13.3-15
Figure 2.13.3-5 Boundary Condition & Loads for Bottom End Drop 2.13.3-16
Figure 2.13.3-6 Nodes Selected for Radial Displacement at Different g-Loads 2.13.3-17
Figure 2.13.3-7 Displacement Versus g-Load Curve for Lid End Drop (Internal Pressure) 2.13.3-18
Figure 2.13.3-8 Displacement Versus g-Load Curve for Lid End Drop (External Pressure) 2.13.3-19
Figure 2.13.3-9 Axial Displacement Plot at 300g (Lid End Drop with Internal Pressure) 2.13.3-20
Figure 2.13.3-10 Radial Displacement Plot at 300g (Lid End Drop with Internal Pressure) 2.13.3-21
Figure 2.13.3-11 Axial Displacement Plot at 300g (Lid End Drop with External Pressure) 2.13.3-22
Figure 2.13.3-12 Radial Displacement Plot at 300g (Lid End Drop with External Pressure) 2.13.3-23
Figure 2.13.3-13 Axial Displacement Plot at 300g (Bottom End Drop with Internal Pressure) 2.13.3-24
Figure 2.13.3-14 Radial Displacement Plot at 300g (Bottom End Drop with Internal Pressure) 2.13.3-25
Figure 2.13.3-15 Axial Displacement Plot at 300g (Bottom End Drop with External Pressure) 2.13.3-26
Figure 2.13.3-16 Radial Displacement Plot at 300g (Bottom End Drop with External Pressure) 2.13.3-27
Figure 2.13.3-17 Lead Slump at 95g (Lid End Drop with Internal Pressure) 2.13.3-28
Figure 2.13.3-18 Lead Slump at 95g (Lid End Drop with External Pressure) 2.13.3-29
Figure 2.13.3-19 Lead Slump at 95g (Bottom End Drop with Internal Pressure) 2.13.3-30
Figure 2.13.3-20 Lead Slump at 95g (Bottom End Drop with External Pressure) 2.13.3-31
Figure 2.13.3-21 Axial Displacement Plot at 600g (Lid End Drop with Internal Pressure) 2.13.3-32
Figure 2.13.3-22 Radial Displacement Plot at 600g (Lid End Drop with Internal Pressure) 2.13.3-33
Figure 2.13.3-23 Radial Displacement Plot for 130G Side Drop (Lid Closure End) 2.13.3-34
Figure 2.13.3-24 Radial Displacement Plot for 130G Side Drop (Cask Bottom End) 2.13.3-34

Appendix 2.13.3
TN-LC Cask Lead Slump and Containment Boundary Buckling Analysis

NOTE: References in this Appendix are shown as [1], [2], etc. and refer to the reference list in Section 2.13.3.7.

2.13.3.1 Introduction

The purpose of this analysis is to determine the amount of lead slump that occurs in the TN-LC cask and containment boundary buckling loads during a hypothetical accident condition end drop and side drop. The load cases considered in this calculation are hypothetical accident condition lid and bottom end drops for determining lead slump in the radial gamma shielding, and the hypothetical accident condition side drop to determine lead slump in the cask bottom end and lid gamma shielding.

During either a hypothetical accident condition end drop or side drop, permanent deformation of the lead gamma shield may occur. In the case of the end drop, the radial lead gamma shield is supported by friction between the lead and cask shells, in addition to bearing at the end of the lead column.

A non-linear Finite Element Analysis (FEA) is performed to quantify the amount of lead slump generated during an end drop event. A 3-dimensional ANSYS [1] finite element model is constructed for this purpose. The finite element analysis provides both stresses and displacements generated during the end drop event. The displacement results are used in this section to determine the maximum size of the axial gap that develops at either end of the lead gamma shield column. The effect of this gap on the shielding ability of the transport package is evaluated in Chapter 5. Both stress and displacement distributions computed by the finite element analysis are used to determine the allowable buckling loads of the inner containment shell of the TN-LC cask.

2.13.3.2 Finite Element Model

Geometry

The schematic of structural components of the 3D model of the TN-LC transport cask is presented in Figure 2.13.3-1.

The finite element model represents the TN-LC transport cask assembly by means of fifteen structural components: Outer Shell, Inner Shell, Cap Plug, Bushing, Bottom Lead Cap, Lid, Top Flange, Bottom Flange, End Cap, Tube, Bottom Plug Assembly Gamma Shielding, Bottom Flange Gamma Shielding, Lid Gamma Shielding, Inner/Outer Shell Gamma Shielding and Gamma Shielding Cap. The Neutron Shield assembly structure is not modeled, but its mass is accounted for as a surface mass load.

Table 2.13.3-1 lists the ANSYS element types used to represent the structural components of the cask design.

Table 2.13.3-2 shows specifications of the contact model between material components done by means of surface contact elements (elements CONTA173, TARGE170).

Methodology

An ANSYS elastic-plastic buckling analysis with large displacement option was performed to calculate the buckling loads of the cask under each end drop case. The 300g drop load is applied to each ANSYS cask end drop model. This 300g drop load is ramped in small increments by many load sub-steps. The ANSYS solution was set to stop and exit at any load sub-step that failed to result in a converged solution. When the imposed sub-step load reaches the buckling load, ANSYS is unable to produce a converged solution.

For both the Lid and Bottom End Drop cases, the ANSYS solution converged up to the maximum load of 300g. Post-processing was conducted to determine the radial displacement of the outer and inner shells at the 300g load. The Lid End Drop case with internal pressure shows marginally higher radial displacement (Figure 2.13.3-9 through Figure 2.13.3-16). Therefore, a separate analysis was carried out for the Lid End Drop case with internal pressure up to a load of 600g. No buckling occurred up to the maximum load of 600g (Figure 2.13.3-21 and Figure 2.13.3-22).

Conservatively, 300g has been taken as the buckling load which will sufficiently bound all the load scenarios.

Lead slump values were calculated at 95g, which bounds the acceleration values determined in Appendix 2.13.12.

For the side drop case, the lead slump is conservatively estimated from the resulting displacement plots.

2.13.3.3 Material Properties

Properties of TN-LC cask materials are taken at 350°F for both hot and cold environment cases. The transport cask material properties used for the analysis are the same as used in the elastic-plastic accident analysis of Appendix 2.13.1.

2.13.3.4 Loading and Boundary Conditions

Basket and Payload Weight

Basket and payload weight impact is applied to the cask model based on a bounding basket and payload weight of 8000 lb.

The payload weight is imposed as a pressure load distributed uniformly at the area of basket contact with the gamma shielding cap and the lid (Lid End Drop) or the lead cap, bottom and the bottom flange (Bottom End Drop). The payload pressure for the Lid End Drop and Bottom End Drop are illustrated in Figure 2.13.3-2 and Figure 2.13.3-3 respectively. The payload load pressure for these loads is denoted by P_I.

Impact Limiter Weight Bolt

Loads applied to the cask model are based on the assumption that the front impact limiter mass is 1500 lb. and the rear impact limiter mass is 1500 lb. These values of impact limiter weights reflect the limiter weights given in Chapter 2.

In the Bottom End Drop calculations, the full weight of the front limiter is imposed as a uniform axial pressure load acting on the effective area of contact with the cask body.

In the Lid End Drop calculations, the full weight of the rear impact limiter is imposed as a uniform axial pressure load acting on the effective area of the contact with the cask body.

The pressure load due to the impact limiter weight for Lid End Drop and Bottom End Drop cases are illustrated in Figure 2.13.3-2 (Lid End Drop) and Figure 2.13.3-3 (Bottom End Drop). The pressure for these loads is denoted P_L.

Boundary Conditions

There are two boundary conditions imposed on the cask model. The first one is the symmetry boundary condition on the cutting plane. The cask is assumed to fall on a rigid surface and accordingly contact elements (CONTA178) are used to model the interface between the cask surface and rigid surface of the impact plane, with nodes representing the rigid surface as being constrained in the axial direction. A total of four load cases are analyzed.

- Lid End Drop with 30 psig Internal Pressure
- Lid End Drop with 25 psig External Pressure
- Bottom End Drop with 30 psig Internal Pressure
- Bottom End Drop with 25 psig External Pressure

Loadings and boundary conditions for the 3D finite element model are shown in Figure 2.13.3-4 and Figure 2.13.3-5 for the Lid End Drop and Bottom End Drop respectively.

2.13.3.5 FEA Results

Buckling Load

The ANSYS model is stable under the applied loads before the non-converged solution occurs (at about 300g) for the case of a Lid End Drop with internal or external pressure. Similarly, for the case of a Bottom End Drop with internal or external pressure, the solution converges until an applied load of approximately 300g. Time-history post-processing is done for select nodes to plot the radial deformation against g-loads to get a conservative value of g-load producing the deformation.

The post-processing of results for all the cases shows that both the lead slump and the maximum radial displacement at 300g on the inner and outer shell are marginally higher in the Lid End Drop case with internal pressure (See Figure 2.13.3-9 through Figure 2.13.3-16).

Figure 2.13.3-6 shows the nodes which were taken to extract the radial displacement at the outer shell and the inner shell for different g-loads for the Lid End Drop case. Figure 2.13.3-7 and Figure 2.13.3-8 plot the radial displacement at pre-selected nodes with respect to g-loads. The slope of the plot is continuous with no clear discontinuities, which indicates that there is no buckling up to and including the 300g load.

The Lid End Drop case with internal pressure was modeled and evaluated up to 600g to check for non-convergence of results. The solution converged up to and including when a 600g load was applied (Figure 2.13.3-21 and Figure 2.13.3-22). Therefore, the 300g load has been conservatively assumed to be the buckling load.

Lead Slump

Since the Hypothetical Accident Condition g-load, as stated in Chapter 2, is 95g, the lead slump is calculated at 95g.

Table 2.13.3-3 summarizes the lead slump values for various end drop load cases. The maximum calculated axial lead slump is 1.129 in. and occurs during the Lid End Drop with internal pressure. The corresponding plots are shown in Figure 2.13.3-17 through Figure 2.13.3-20.

For the side drop case, the lead slump is conservatively estimated from the displacement plots shown in Figure 2.13.3-23 and Figure 2.13.3-24.

Maximum lead slump for gamma shielding at the lid = maximum radial displacement at the outer surface of the gamma shield – minimum radial displacement at the inner surface of the lid:

=0.071155 – (-0.083816) = 0.155 in.

Maximum lead slump for gamma shielding at the cask bottom = maximum radial displacement at the outer surface of the gamma shield – minimum radial displacement at inner surface of the bottom flange:

= 0.048865 – (- 0.060707) = 0.110 in.

2.13.3.6 Conclusions

Table 2.13.3-3 shows that the maximum calculated longitudinal gap, caused by lead slump, is 1.129 in. and occurs during the hypothetical accident condition Lid End Drop with internal pressure. The maximum calculated gap in the top and bottom end gamma shielding during the Side Drop is 0.155 in. The effect of the gaps on the shielding ability of the TN-LC cask is analyzed in Chapter 5. The allowable buckling load is 300g, and the accident g load is 95g, which results in a calculated safety ratio of 3:1.

2.13.3.7 References

1. ANSYS Computer Code and User's Manual, Release 10.0A1.

Table 2.13.3-1
Element Specifications in Finite Element Model (Except Contact Elements)

Component	Material Number	Element Type Number	3D Model Elements
Outer Shell	1	1	SOLID 45
Inner Shell	2	2	SOLID 45
Bottom Plug	3	3	SOLID 45
Bushing	4	4	SOLID 45
Lead Cap, Bottom	5	5	SOLID 45
Lid	6	6	SOLID 45
Top flange	7	7	SOLID 45
Bottom Flange	8	8	SOLID 45
End Cap	9	9	SOLID 45
Tube	10	10	SOLID 45
Bottom Plug Assembly Gamma Shielding	11	11	SOLID 45
Bottom Flange Gamma Shielding	12	12	SOLID 45
Top Lid Gamma Shielding	13	13	SOLID 45
Inner/Outer Shell Gamma Shielding	14	14	SOLID 45
Gamma Shielding Cap (Top)	15	15	SOLID 45
Neutron Shield	16	16	SURF154
Lid Bolts (Radial Shear Interaction)	391	391	COMBIN 39
Lid Bolts (Tangential Shear Interaction)	391	392	COMBIN 39
Lid Bolts (Axial Interaction)	391	393	COMBIN 39
Cap Bolts (Radial Shear Interaction)	392	394	COMBIN 39
Cap Bolts (Tangential Shear Interaction)	392	395	COMBIN 39
Cap Bolts (Axial Interaction)	392	396	COMBIN 39

Table 2.13.3-2
Elements Specifications in Finite Element Model (Contact Elements)
(Part 1 of 2)

Interface Description	Element Type Number		Element Real Constants	Material Type Number
	Target Element	Contact Element		
Lid and Top Flange (Top Radial Interface)	1300	300	300	20
Lid and Top Flange (Plate Contact interface)	1301	301	301	20
Lid and Top Flange (Bottom Radial Interface)	1302	302	302	20
Bottom Plug and Bottom Flange (Radial Interface)	1104	104	104	21
Bottom Plug and Bottom Flange (Plate Contact Interface)	1105	105	105	21
Bottom Plug and Tube (Radial Interface)	1106	106	106	22
Bottom Plug and Tube (Plate Contact Interface)	1107	107	107	22
Bottom Plug and Bottom Plug Assembly Gamma Shielding (Plate Contact Interface)	1108	108	108	23
Tube and Bottom Plug Assembly Gamma Shielding (Radial Interface)	1109	109	109	24
Bottom Plug Assembly Gamma Shielding and End Cap (Plate Contact Interface)	1110	110	110	25
Tube and End Cap (Radial Interface)	1111	111	111	26
Tube and Bushing (Radial Interface)	1112	112	112	27
Tube and Bottom Flange (Radial Interface)	1113	113	113	28
Bottom Flange and Bushing (Plate Contact Interface)	1114	114	114	29
Bottom Flange and Bushing (Radial Interface)	1115	115	115	29

Table 2.13.3-2
Elements Specifications in Finite Element Model (Contact Elements)
(Part 2 of 2)

Interface Description	Element Type Number		Element Real Constants	Material Type Number
	Target Element	Contact Element		
Bushing and Bottom Flange Gamma Shielding (Radial Interface)	1116	116	116	30
Bushing and Lead Cap, Bottom (Radial Interface)	1117	117	117	31
Bushing and Lead Cap, Bottom (Plate Contact Interface)	1118	118	118	31
Bottom Flange and Lead Cap, Bottom (Radial Interface)	1119	119	119	32
Bottom Flange and Lead Cap, Bottom (Plate Contact Interface)	1120	120	120	32
Bottom Flange Gamma shielding to Lead Cap, Bottom (Plate Contact Interface)	1121	121	121	33
Bottom Flange Gamma shielding to Bottom Flange (Radial Interface)	1122	122	122	34
Bottom Flange Gamma shielding to Bottom Flange (Plate Contact Interface)	1123	123	123	34
Inner Shell and Inner/Outer Shell Gamma shielding (Radial Interface)	1200	200	200	35
Outer Shell and Inner/Outer Shell Gamma shielding (Radial Interface)	1201	201	201	35
Bottom Flange and Inner/Outer Shell Gamma shielding (Bottom Plate Contact Interface)	1202	202	202	35
Top Flange and Inner/Outer Shell Gamma shielding (Top Plate Contact Interface)	1203	203	203	35
Top Lid Gamma shielding and Lid (Radial Interface)	1303	303	303	36
Top Lid Gamma shielding and Lid (Plate Contact Interface)	1304	304	304	36
Top Lid Gamma shielding and Gamma Shielding Cap (Plate Contact Interface)	1305	305	305	37
Lid and Top Lid Gamma Shielding Cap (Radial Contact Interface)	1306	306	306	38

Table 2.13.3-3
Summary of Lead Slump at 95g End Drop

Lead Slump at 95g (inches)		
Load Case	**Internal Pressure**	**External Pressure**
Lid End Drop	1.129	1.128
Bottom End Drop	1.127	1.124

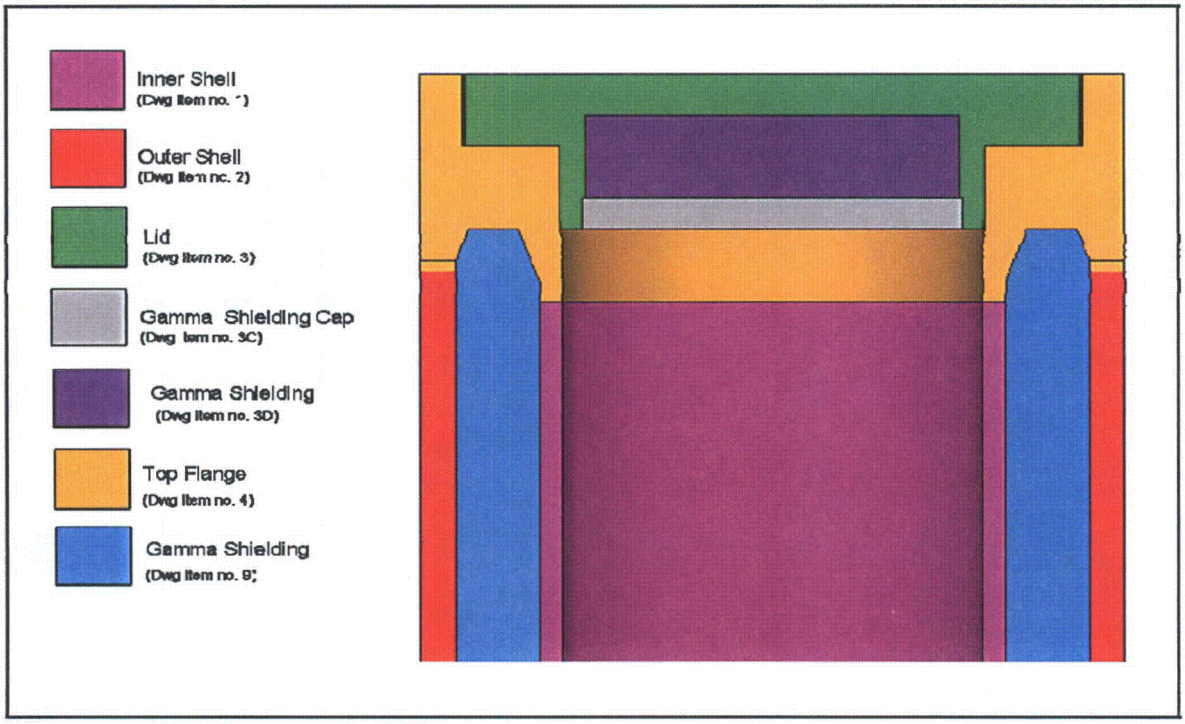

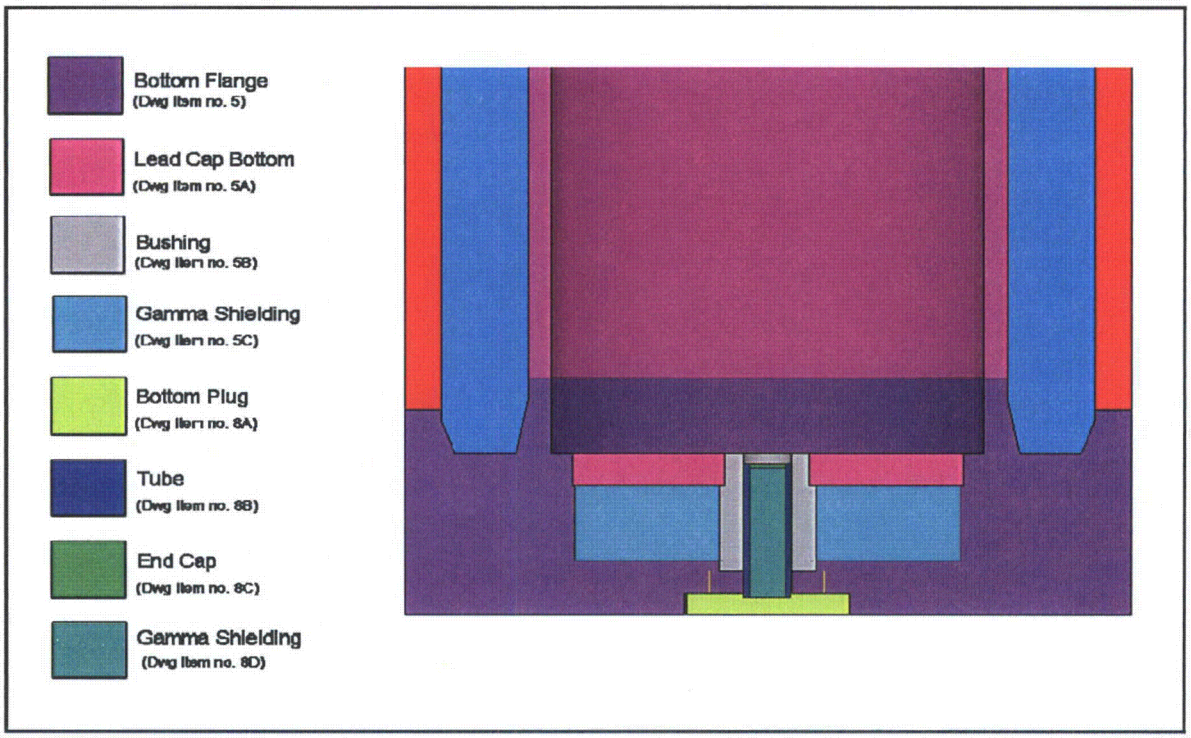

Figure 2.13.3-1
Schematic of the TN-LC Cask - 3D FEA Model ANSYS Elements

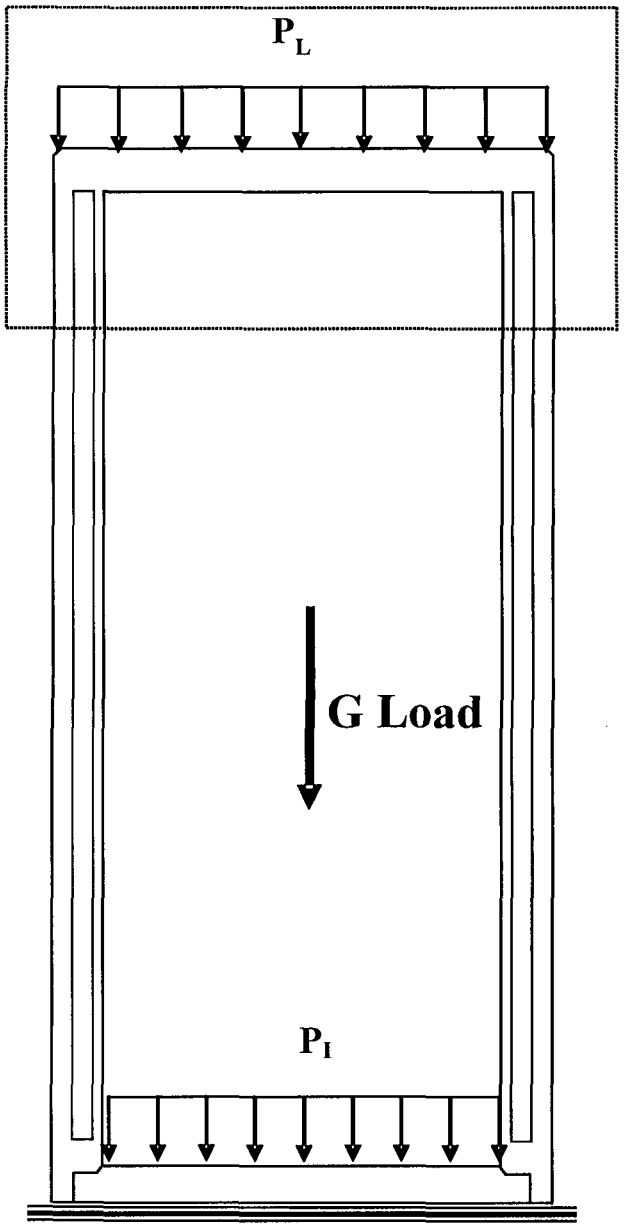

Figure 2.13.3-2
Schematic for Lid End Drop

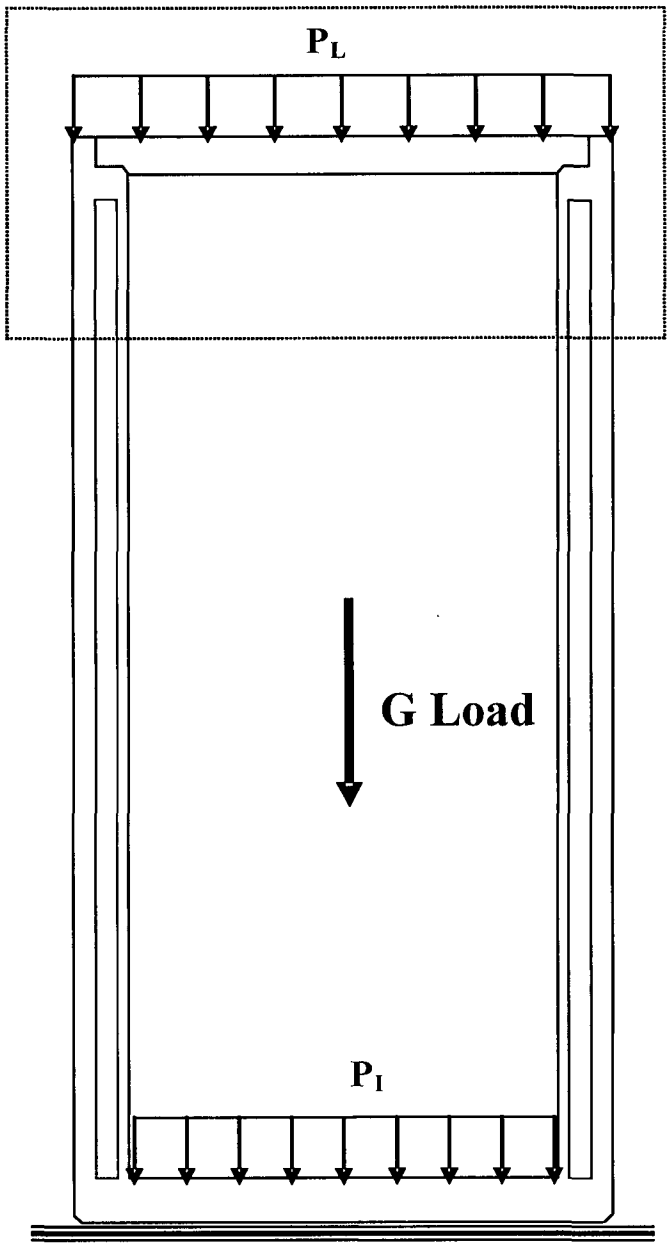

Figure 2.13.3-3
Schematic for Bottom End Drop

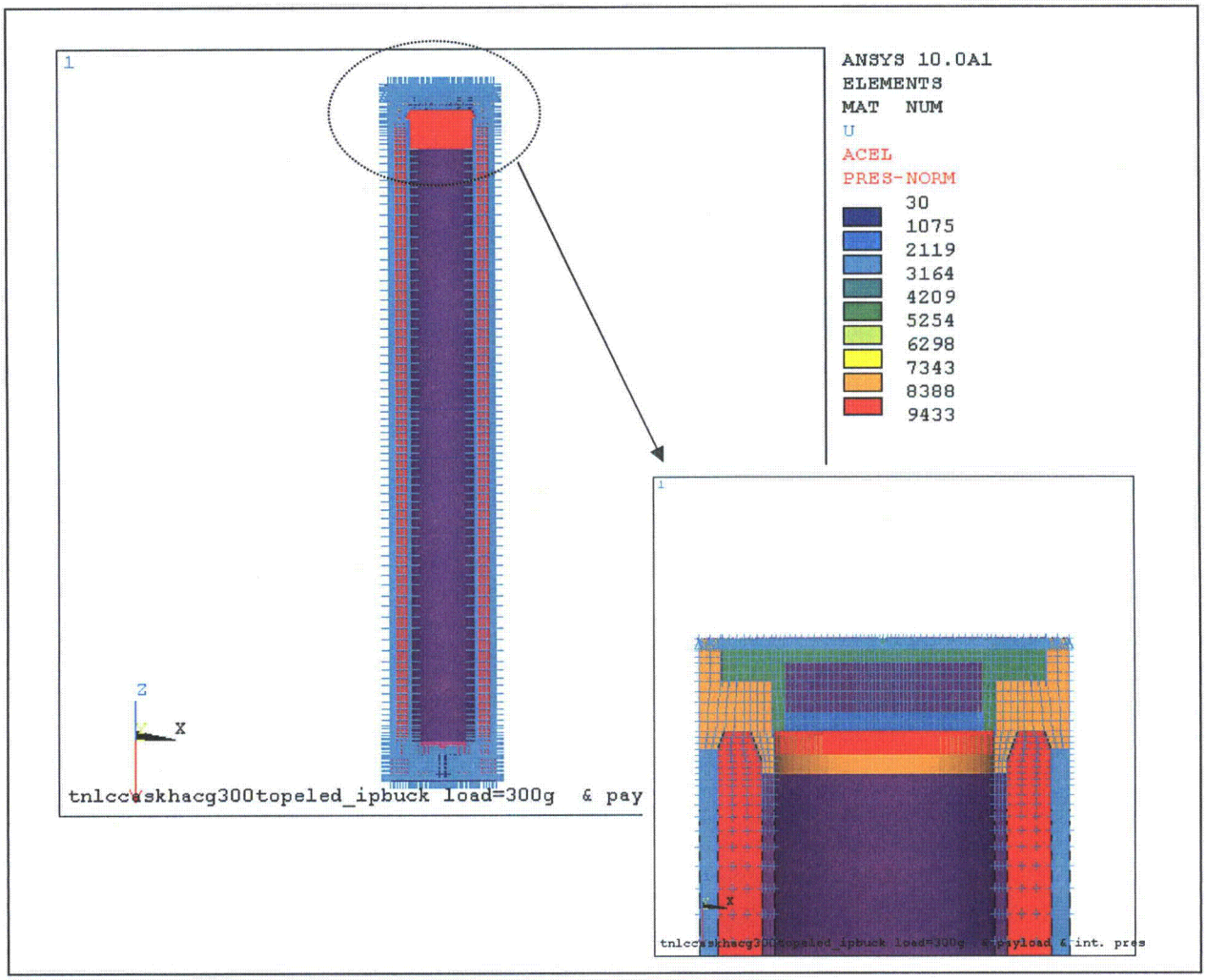

Figure 2.13.3-4
Boundary Condition & Loads for Lid End Drop

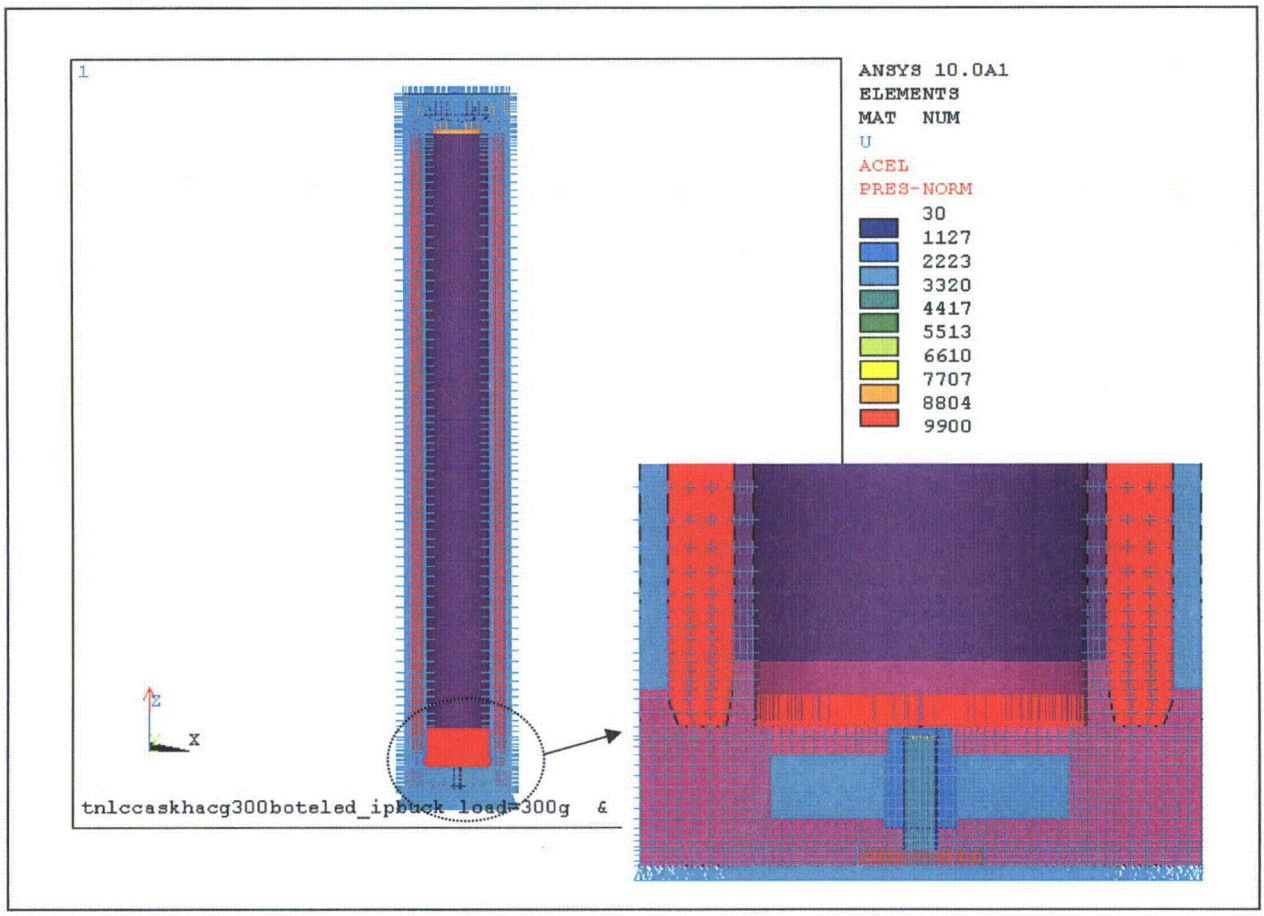

Figure 2.13.3-5
Boundary Condition & Loads for Bottom End Drop

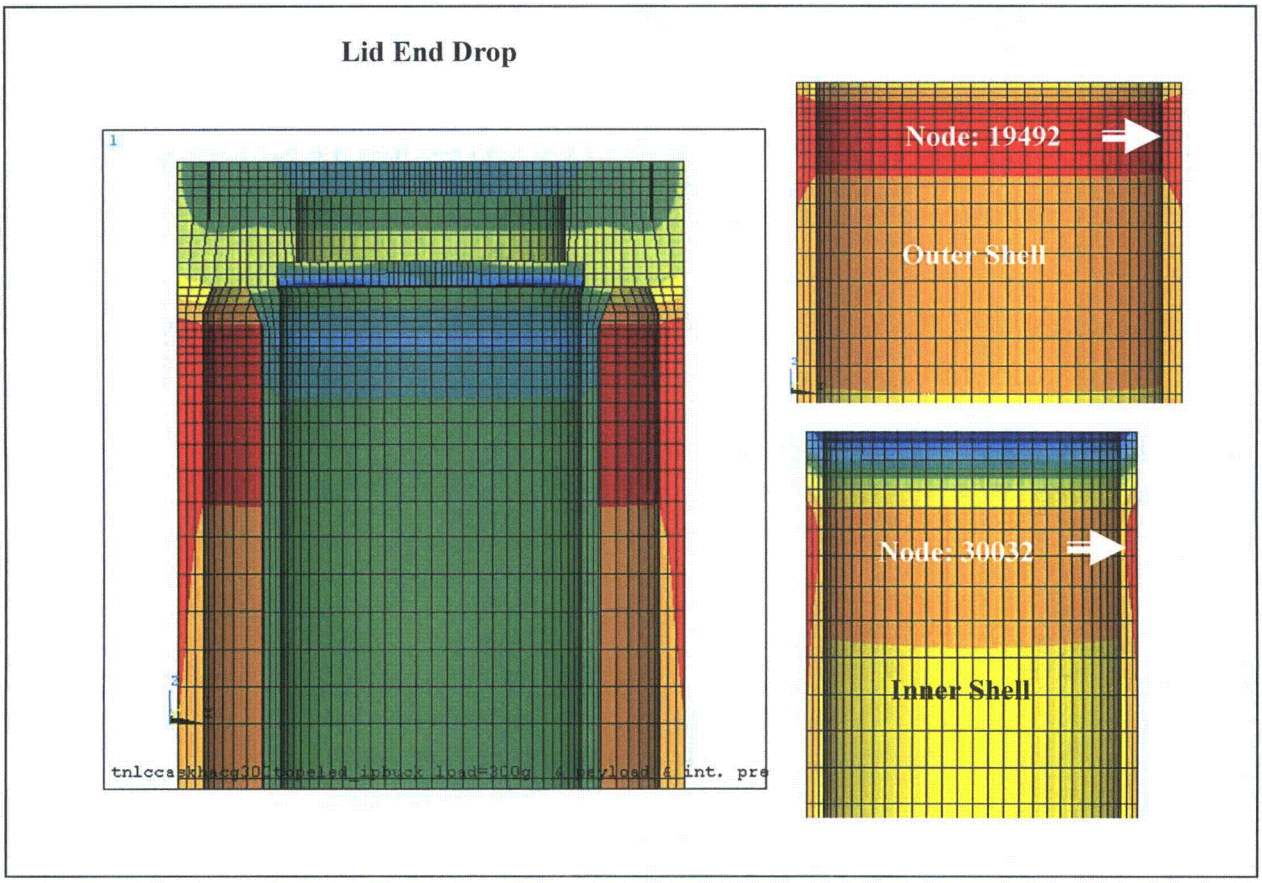

Figure 2.13.3-6
Nodes Selected for Radial Displacement at Different g-Loads

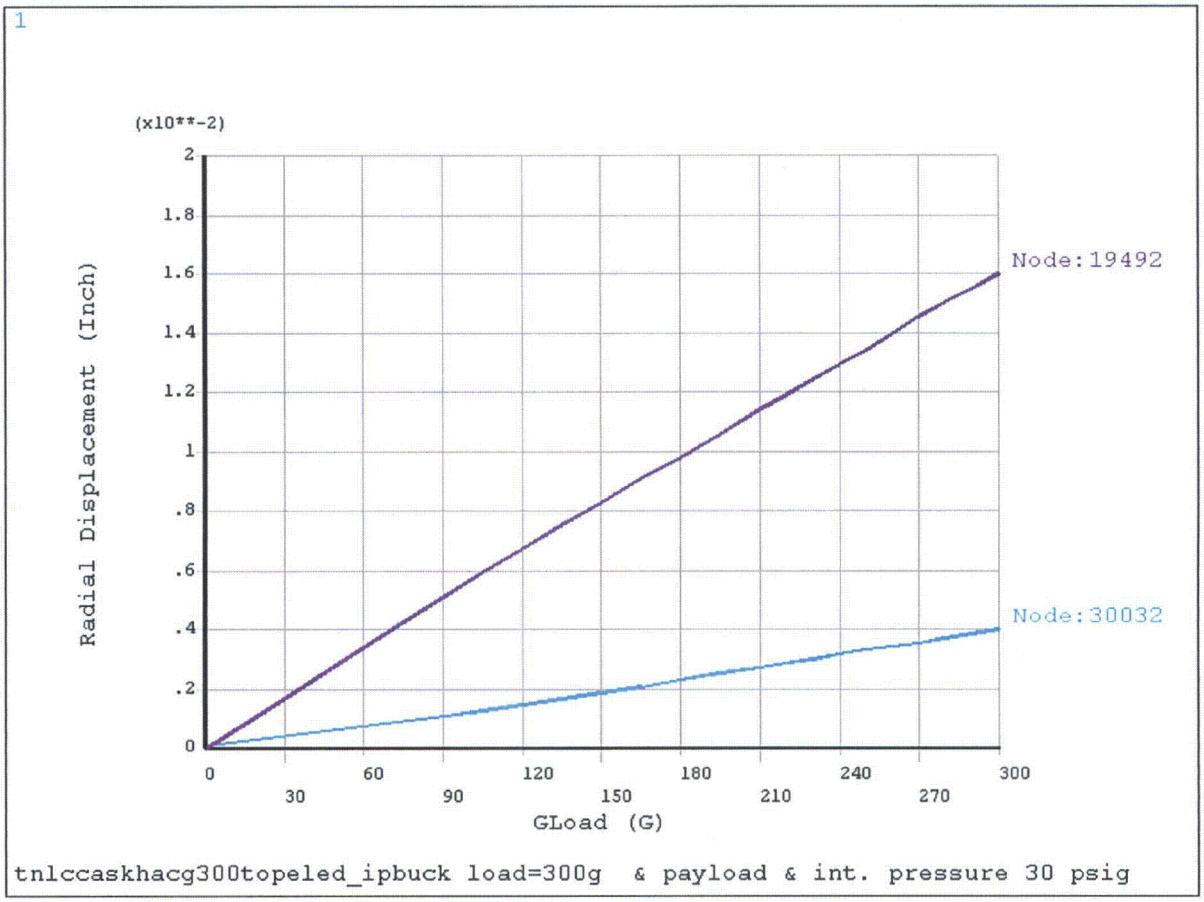

Figure 2.13.3-7
Displacement Versus g-Load Curve for Lid End Drop (Internal Pressure)

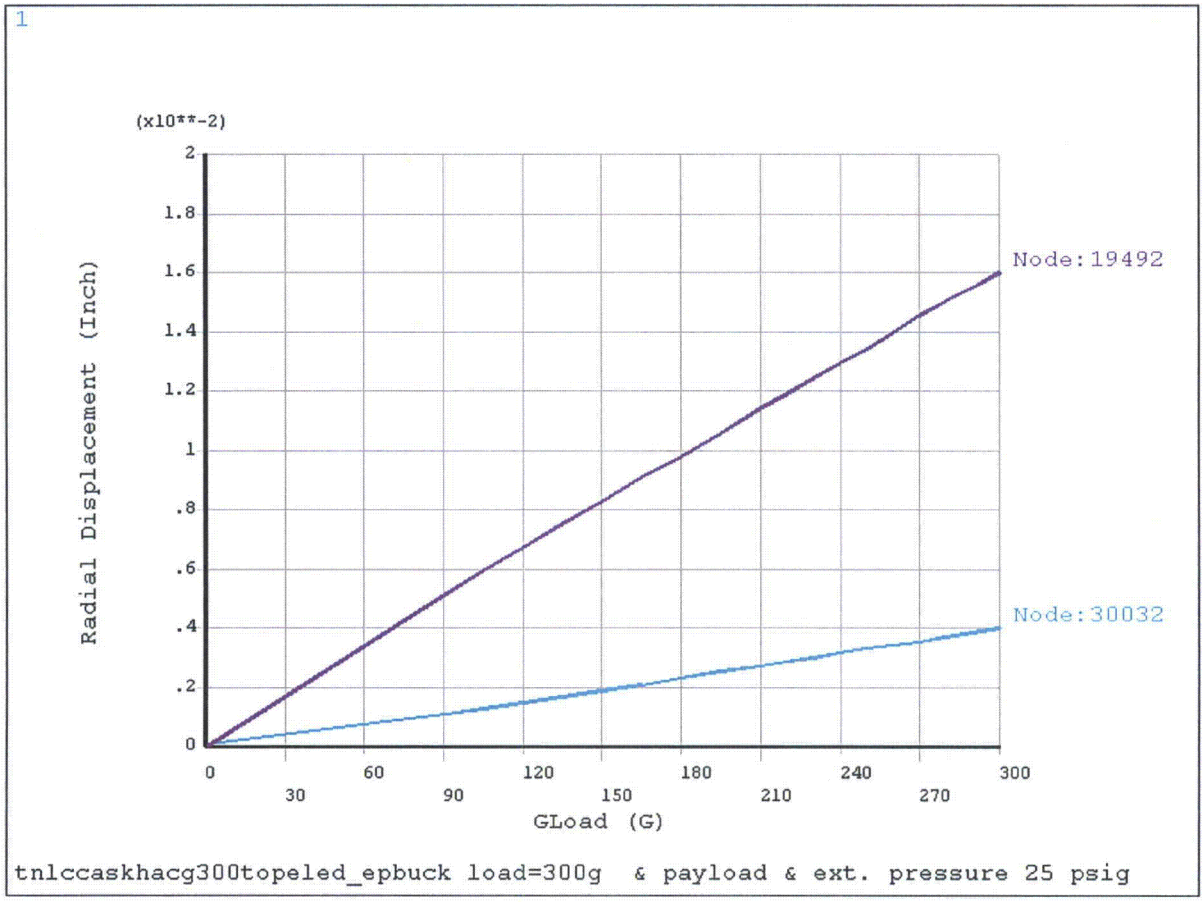

Figure 2.13.3-8
Displacement Versus g-Load Curve for Lid End Drop (External Pressure)

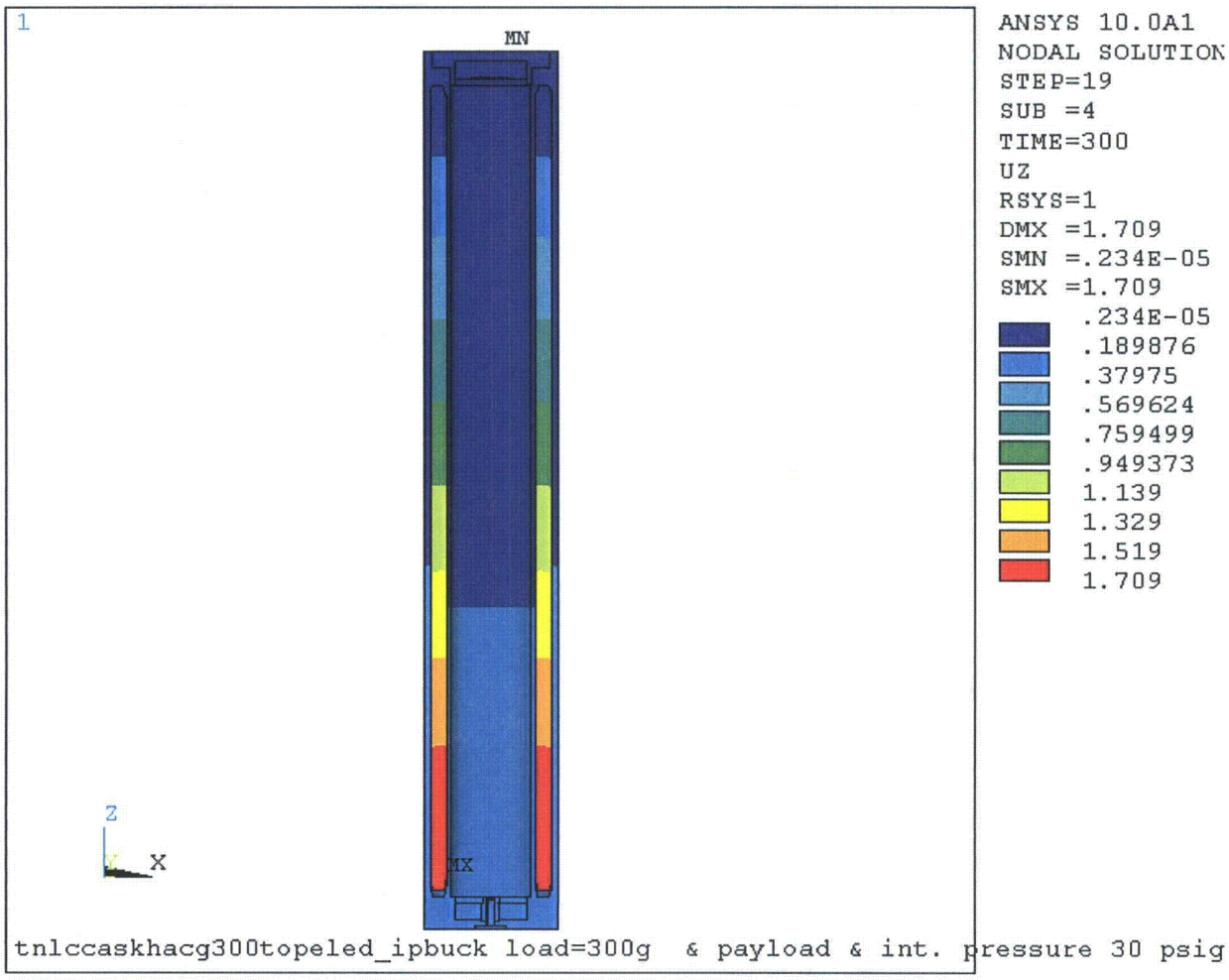

Figure 2.13.3-9
Axial Displacement Plot at 300g (Lid End Drop with Internal Pressure)

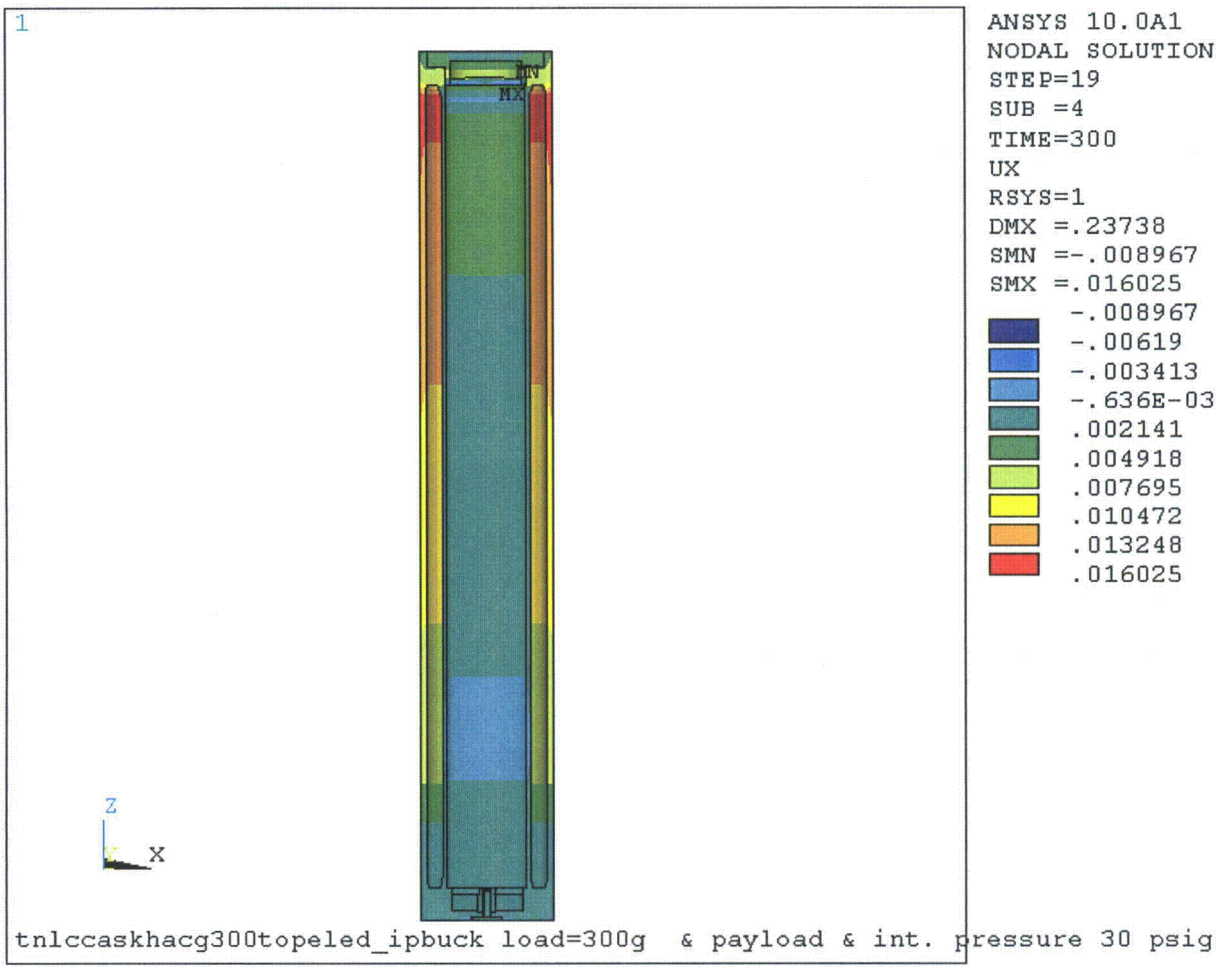

Figure 2.13.3-10
Radial Displacement Plot at 300g (Lid End Drop with Internal Pressure)

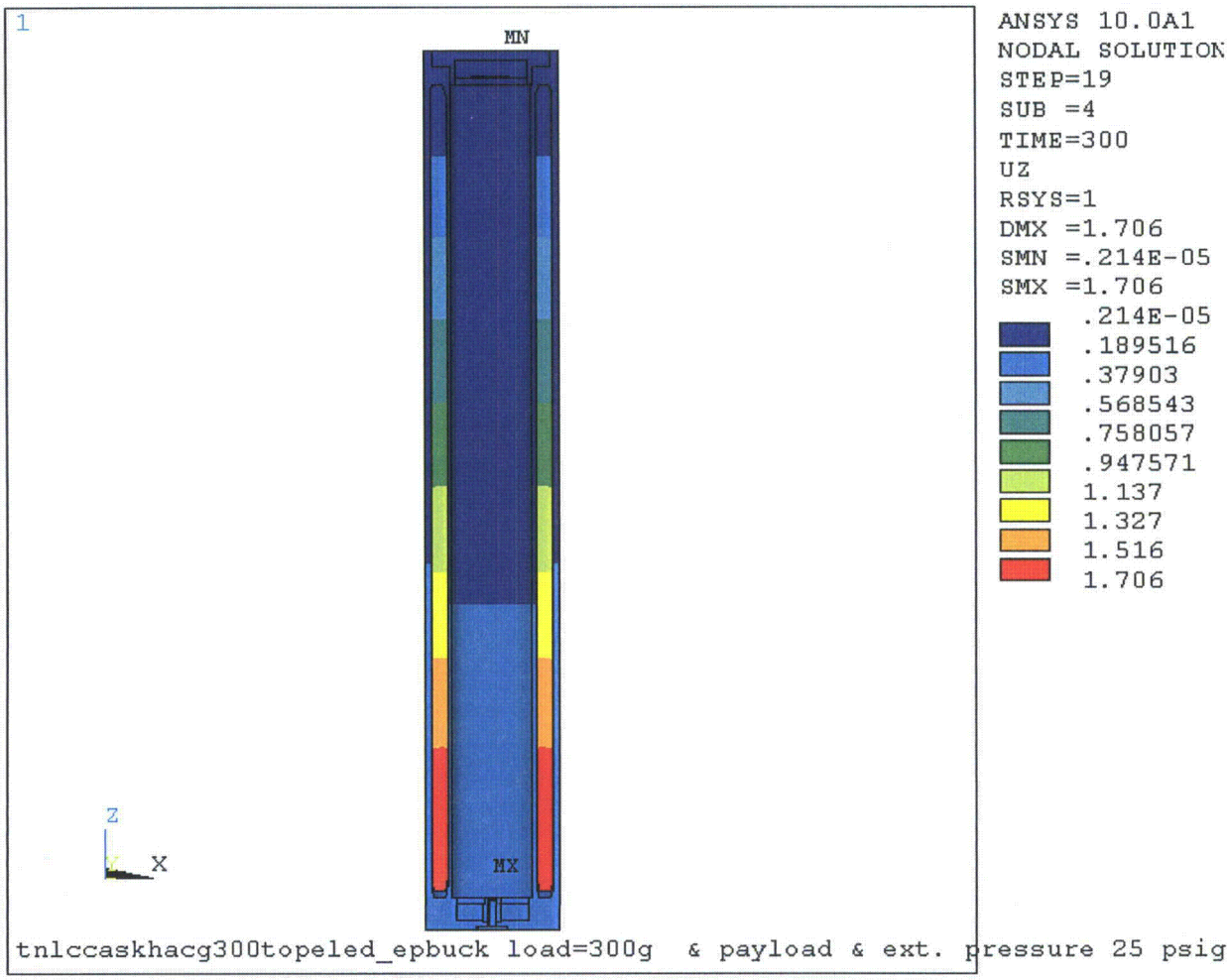

Figure 2.13.3-11
Axial Displacement Plot at 300g (Lid End Drop with External Pressure)

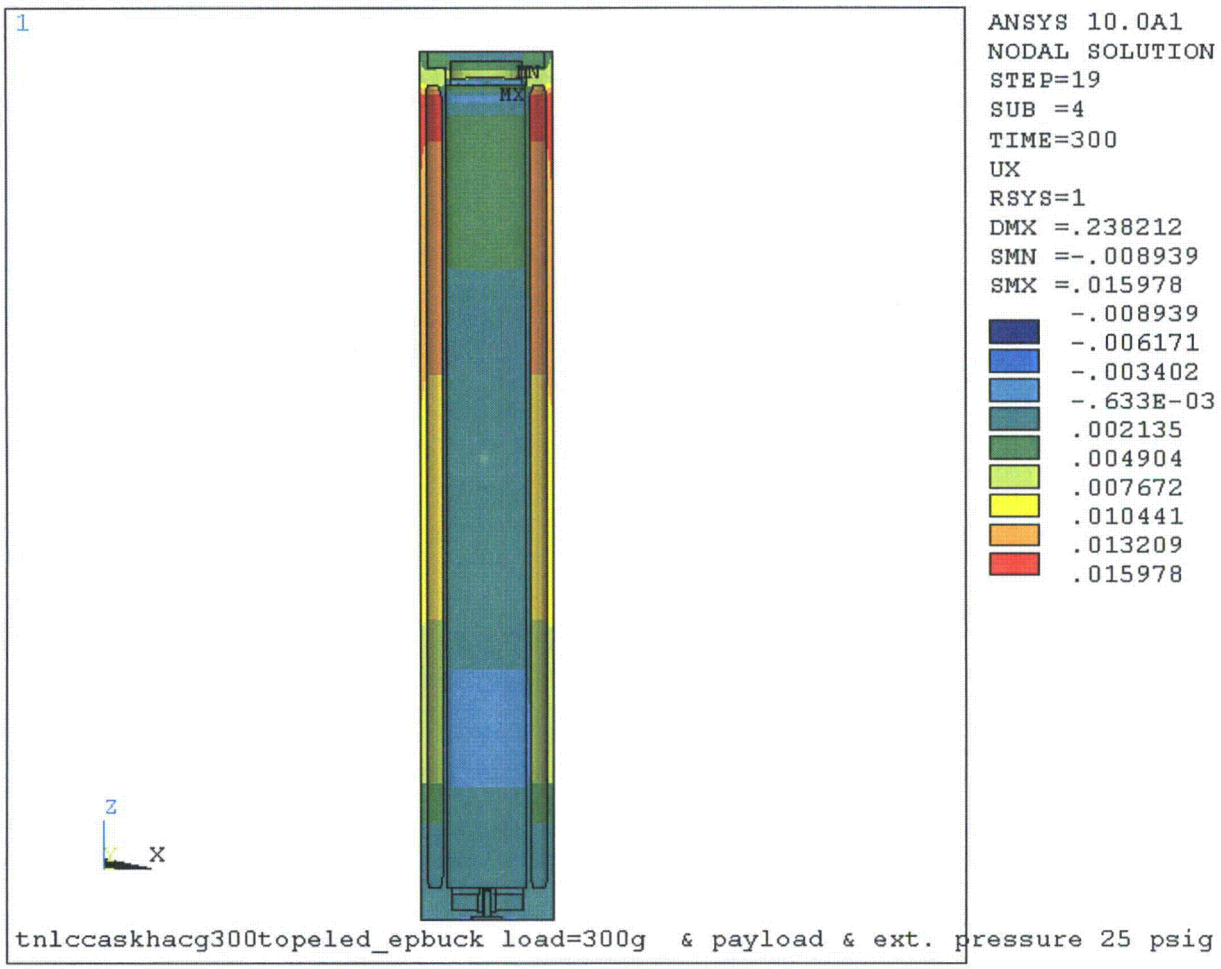

Figure 2.13.3-12
Radial Displacement Plot at 300g (Lid End Drop with External Pressure)

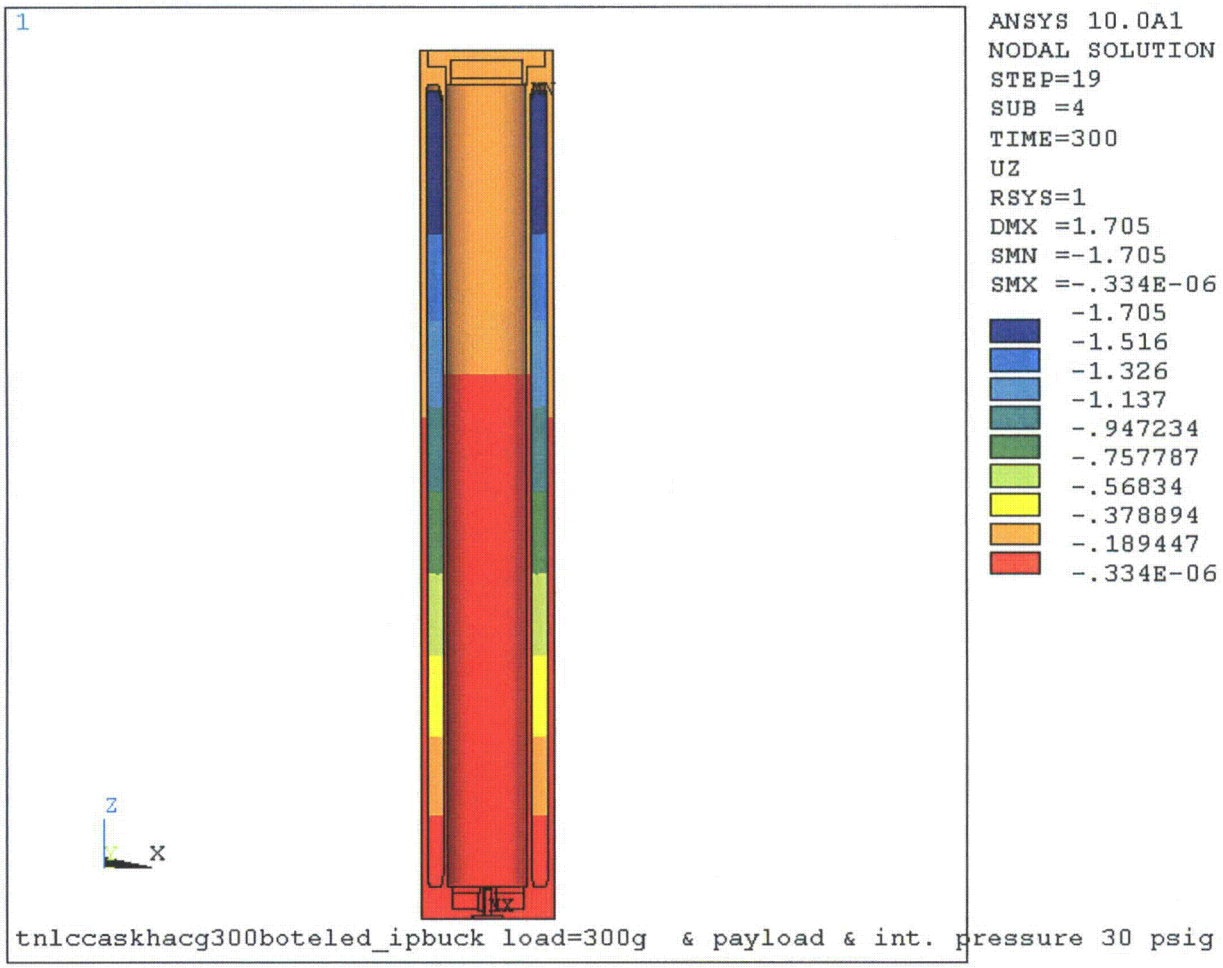

Figure 2.13.3-13
Axial Displacement Plot at 300g (Bottom End Drop with Internal Pressure)

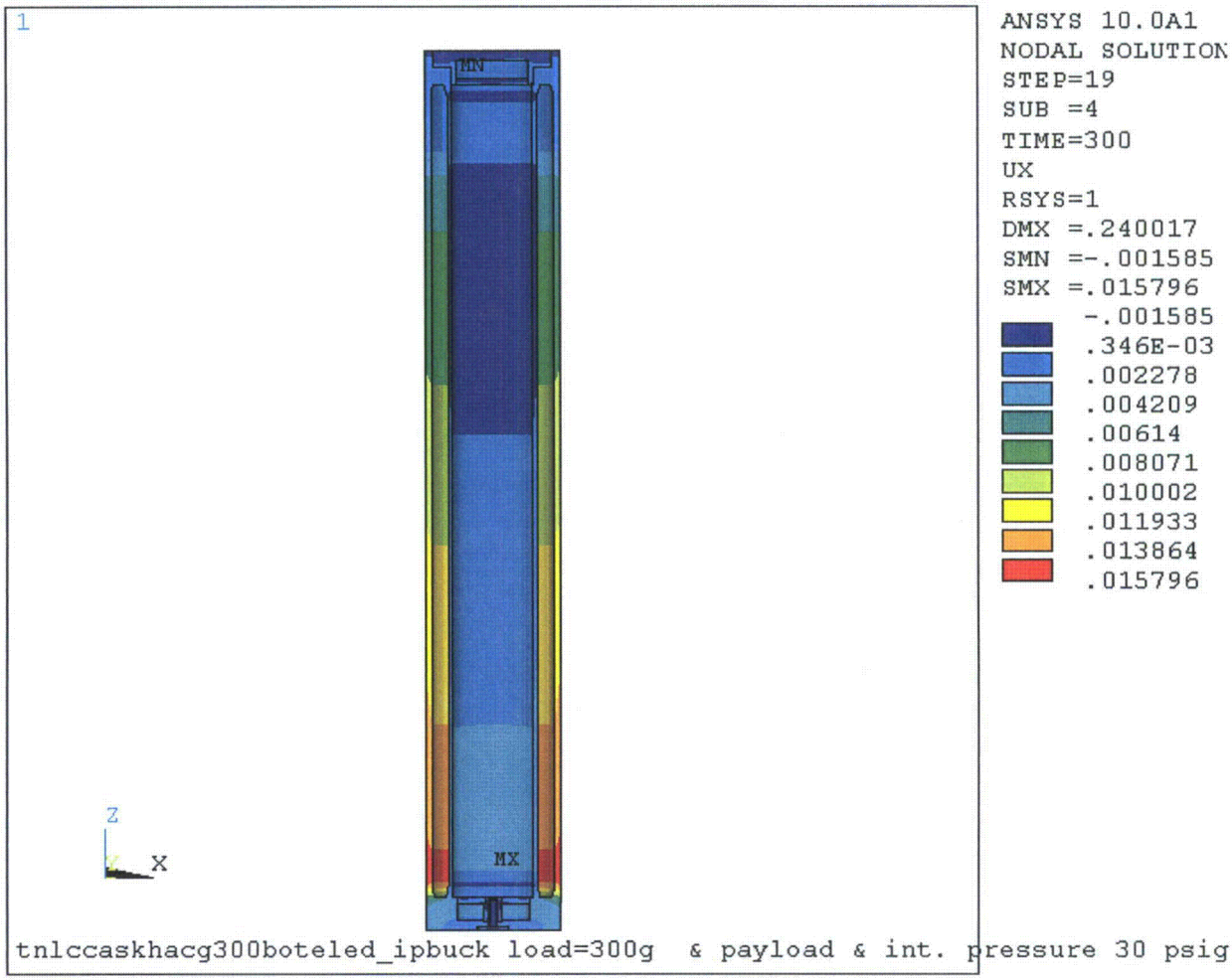

Figure 2.13.3-14
Radial Displacement Plot at 300g (Bottom End Drop with Internal Pressure)

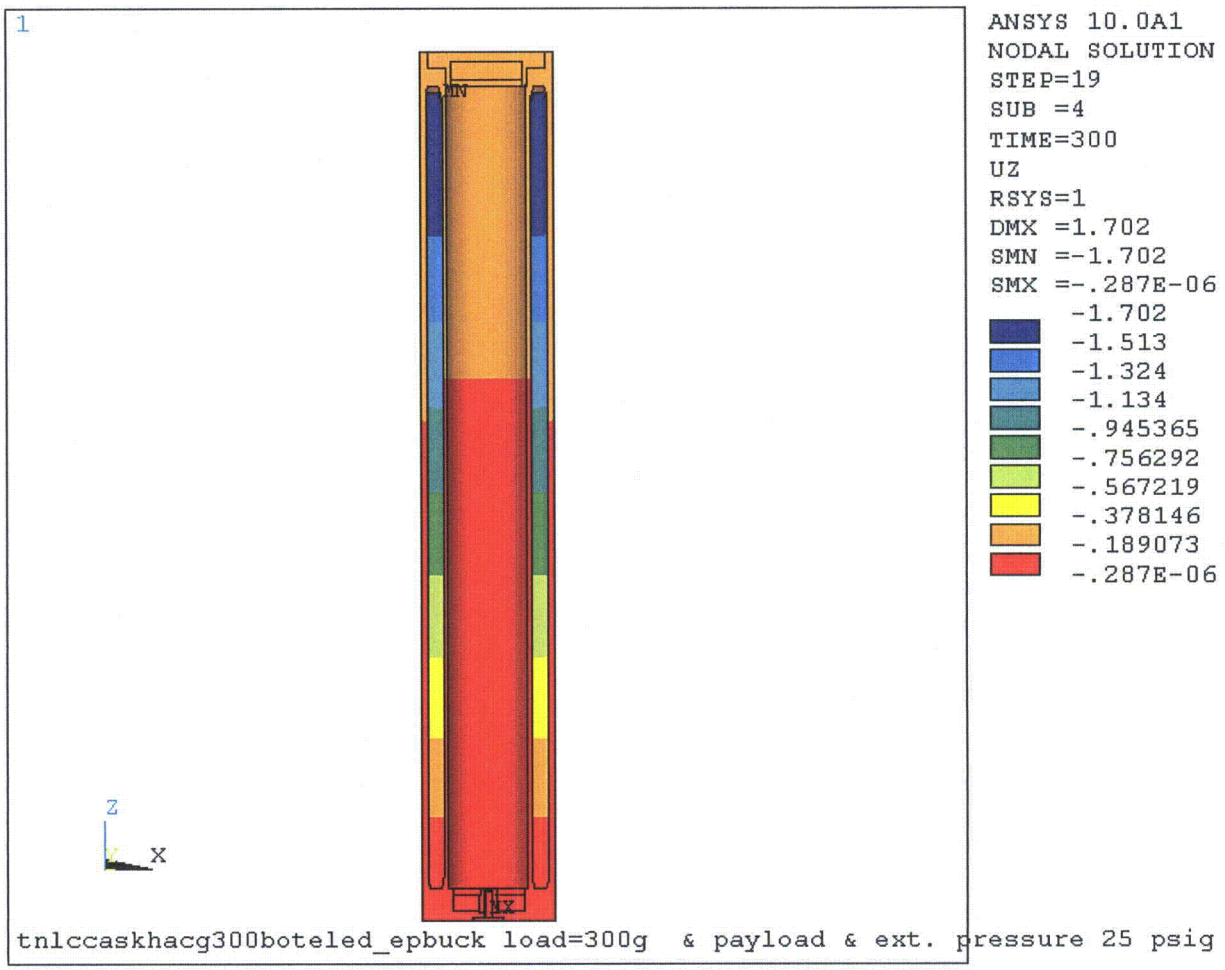

Figure 2.13.3-15
Axial Displacement Plot at 300g (Bottom End Drop with External Pressure)

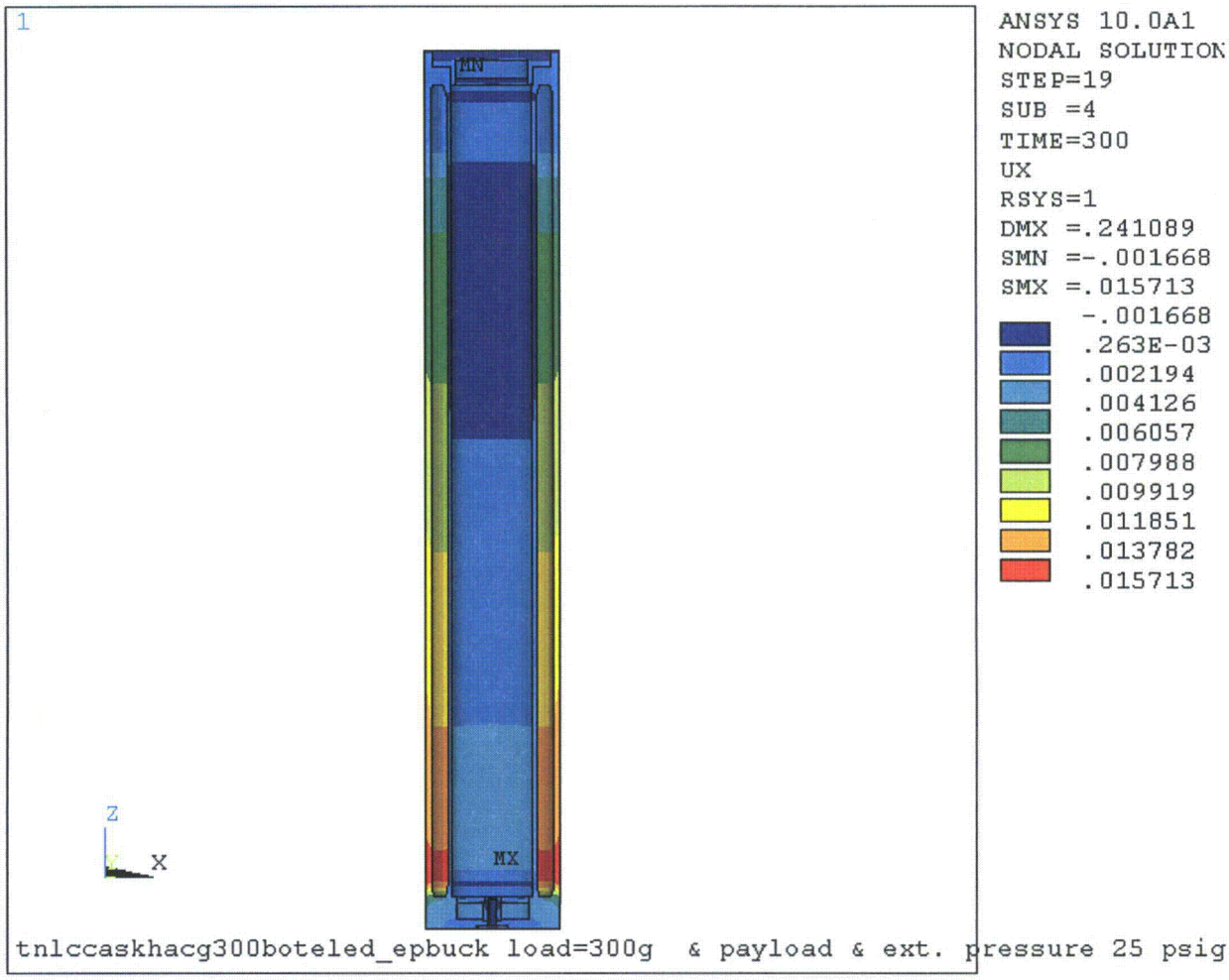

Figure 2.13.3-16
Radial Displacement Plot at 300g (Bottom End Drop with External Pressure)

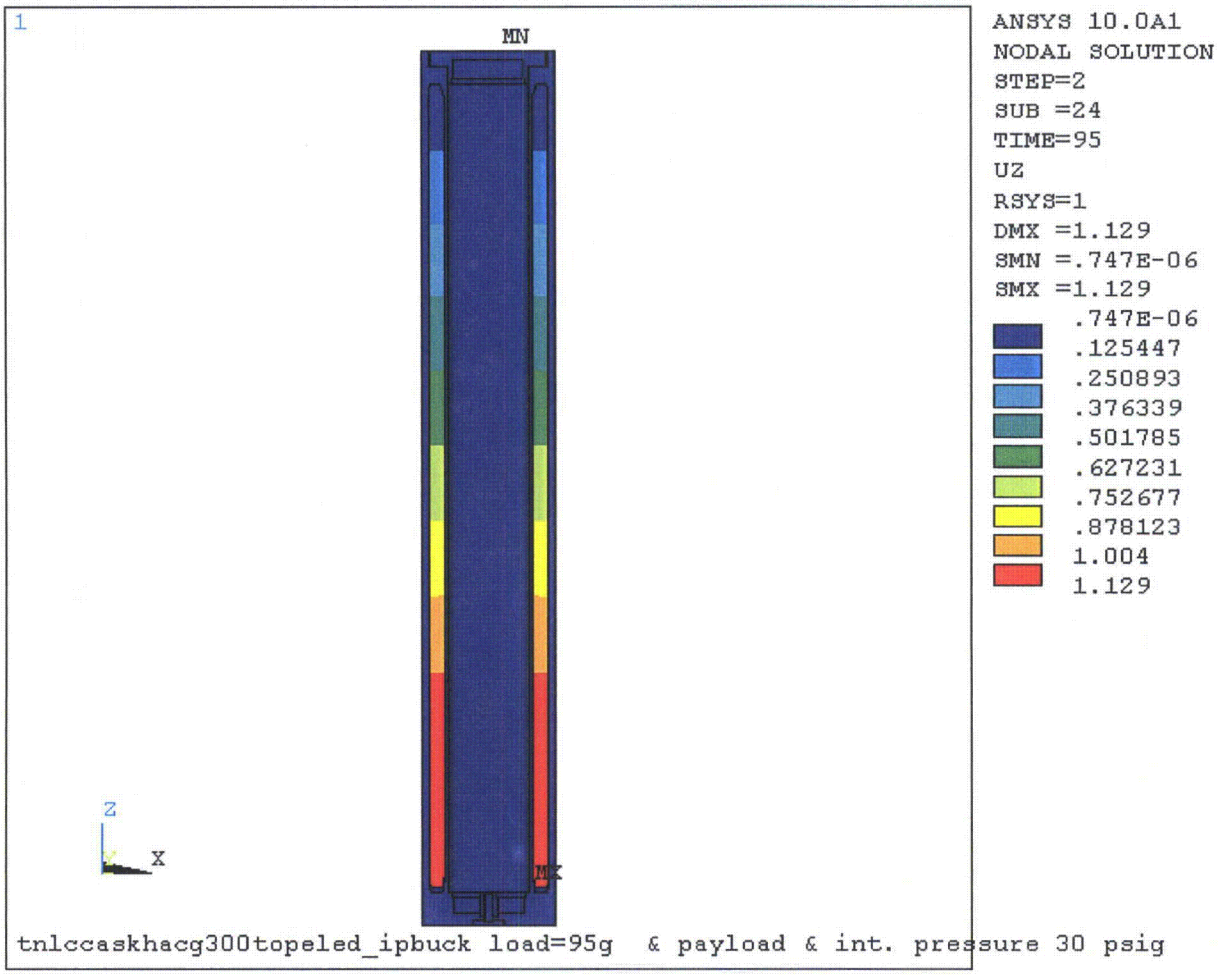

Figure 2.13.3-17
Lead Slump at 95g (Lid End Drop with Internal Pressure)

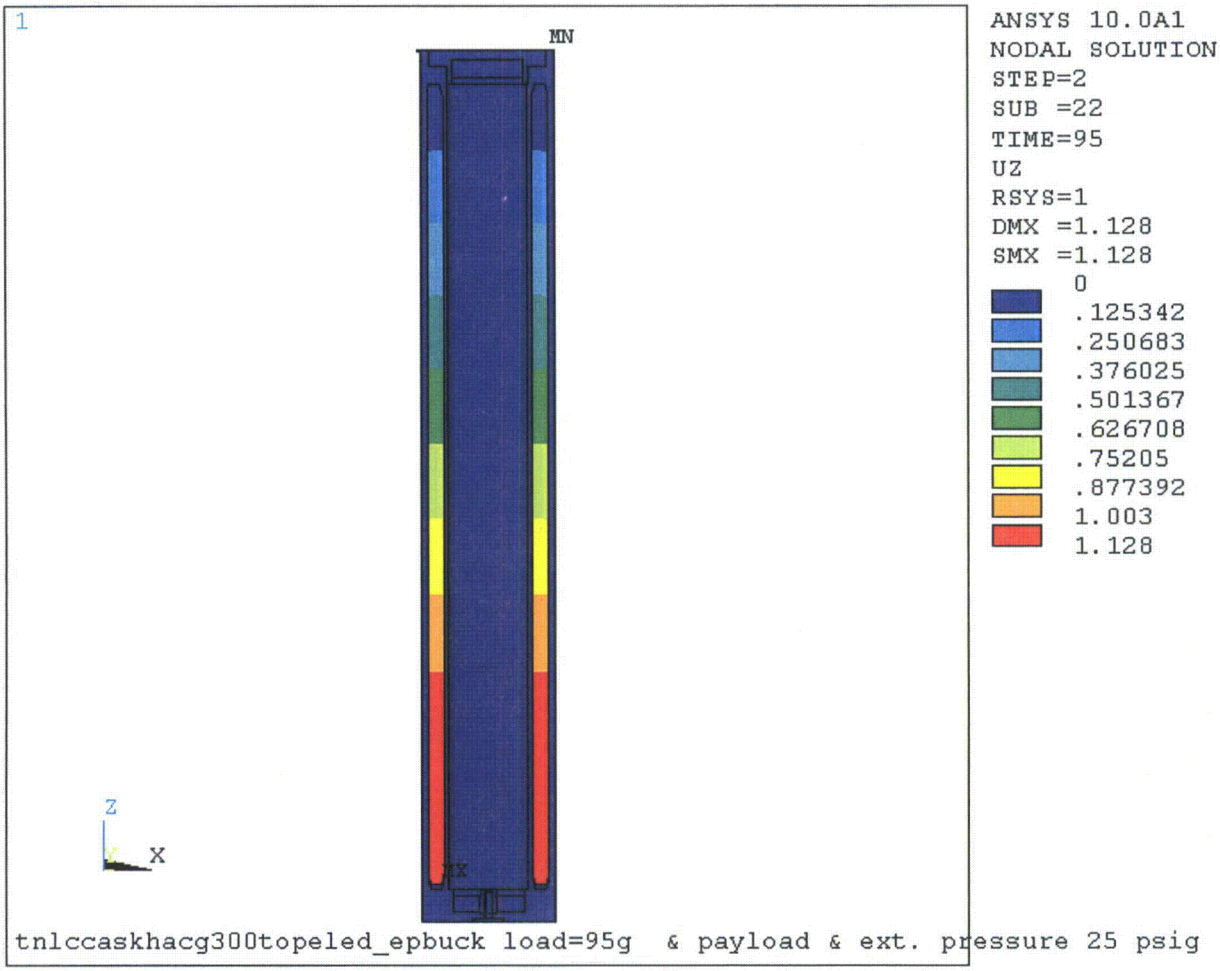

Figure 2.13.3-18
Lead Slump at 95g (Lid End Drop with External Pressure)

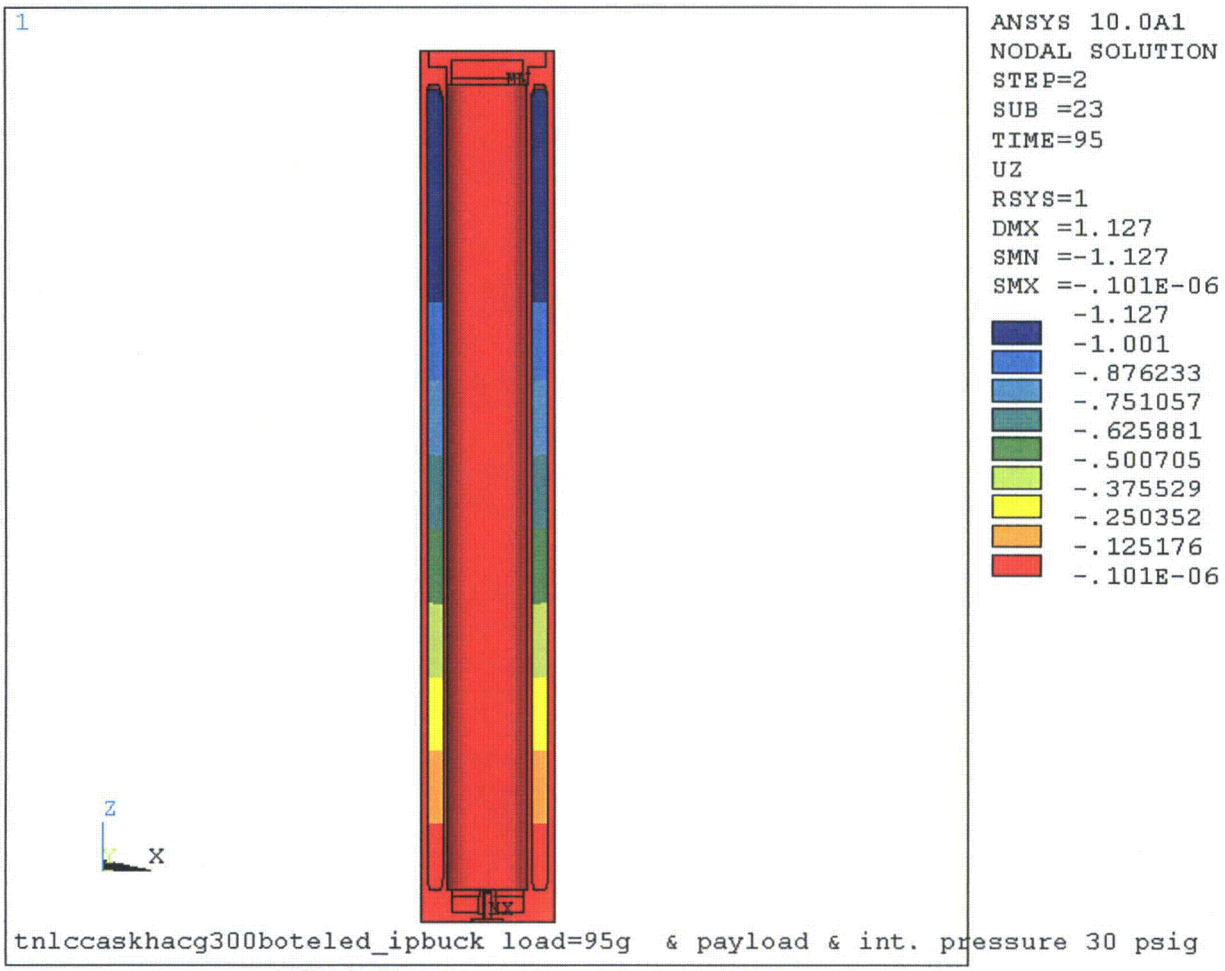

Figure 2.13.3-19
Lead Slump at 95g (Bottom End Drop with Internal Pressure)

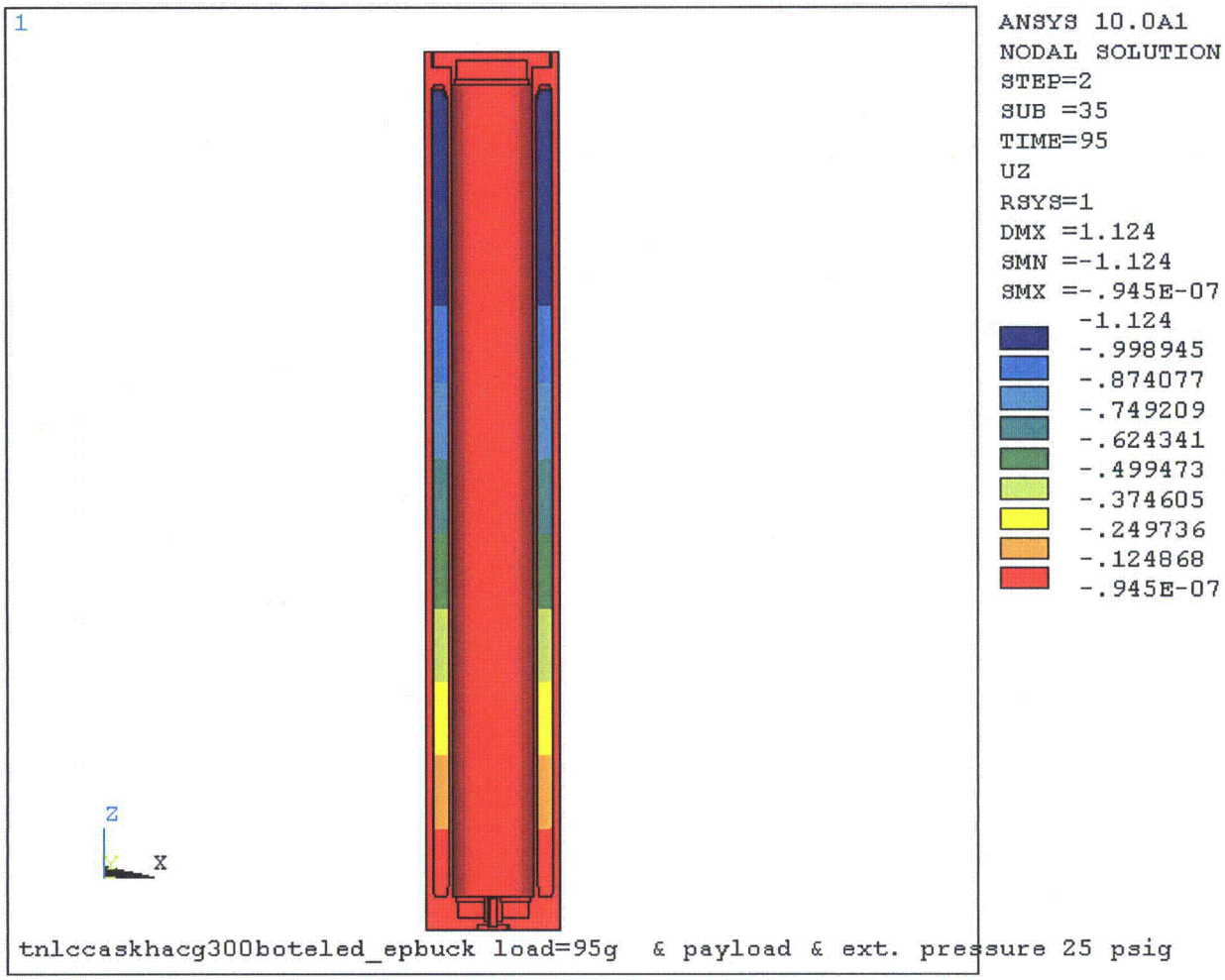

Figure 2.13.3-20
Lead Slump at 95g (Bottom End Drop with External Pressure)

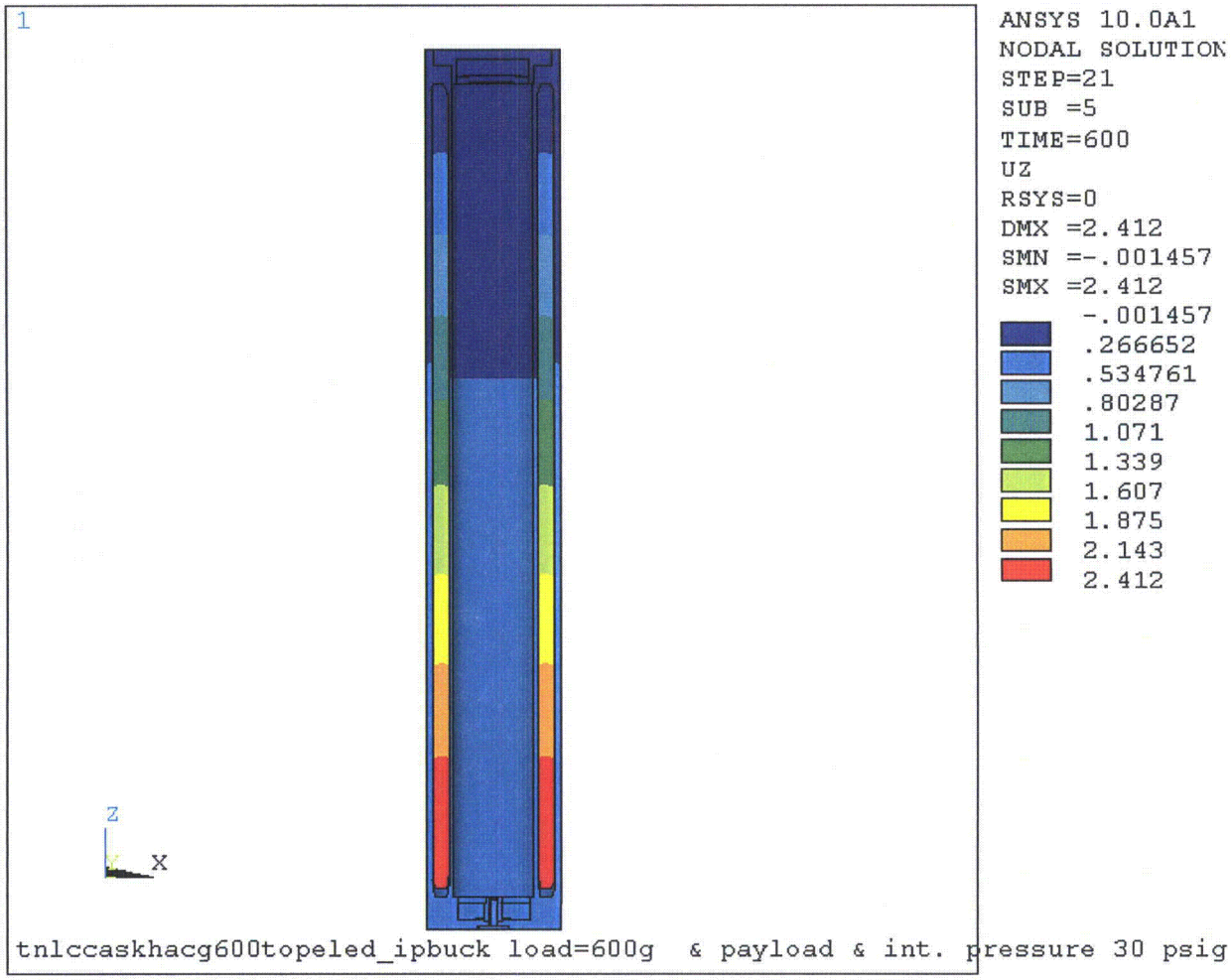

Figure 2.13.3-21
Axial Displacement Plot at 600g (Lid End Drop with Internal Pressure)

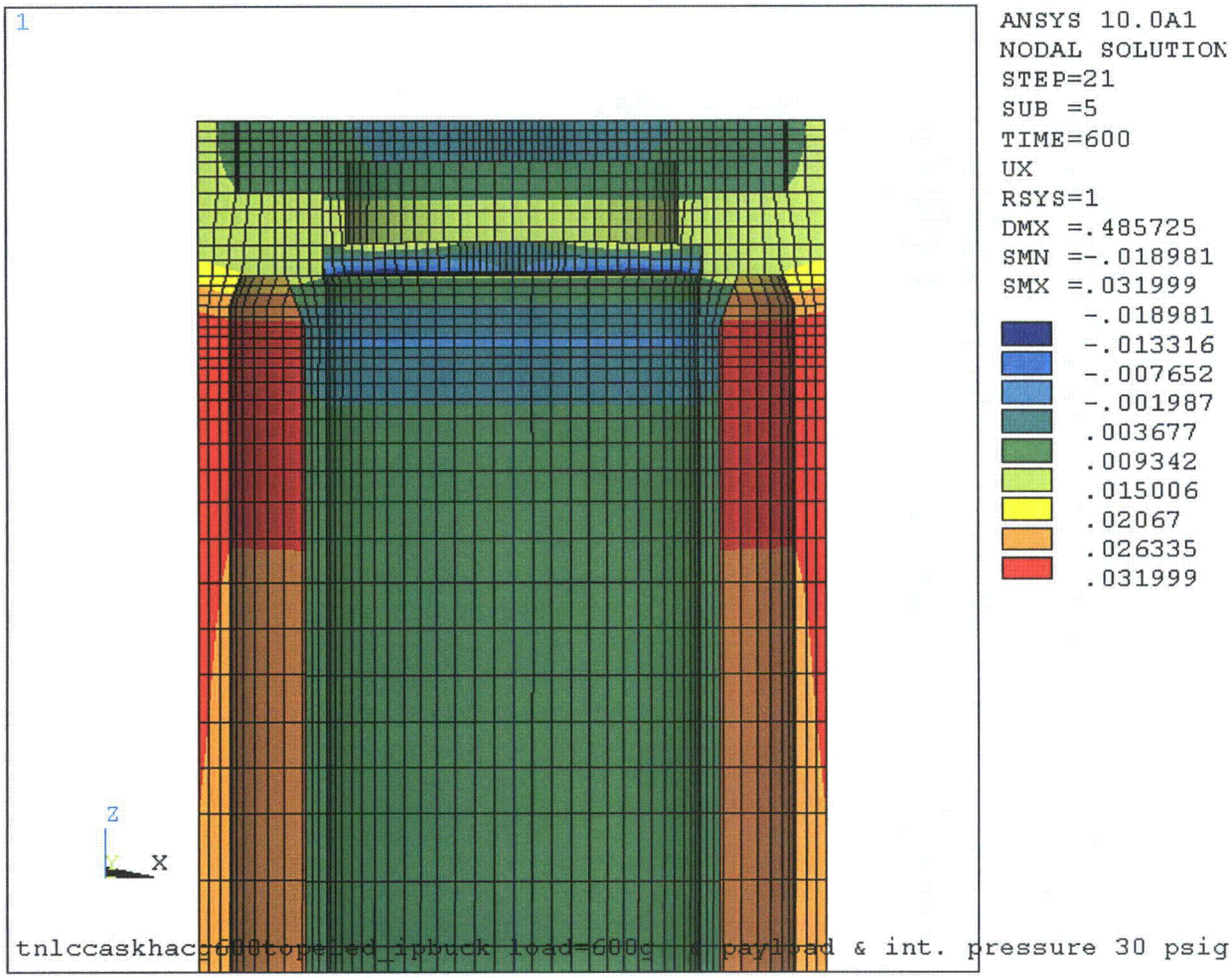

Figure 2.13.3-22
Radial Displacement Plot at 600g (Lid End Drop with Internal Pressure)

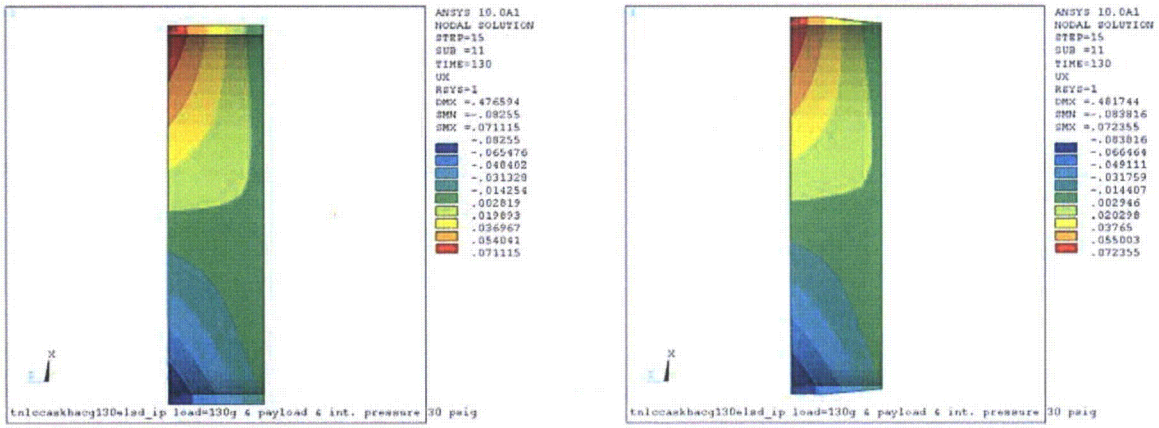

Radial Displacement: Gamma Shielding **Radial Displacement: Lid**

Figure 2.13.3-23
Radial Displacement Plot for 130G Side Drop (Lid Closure End)

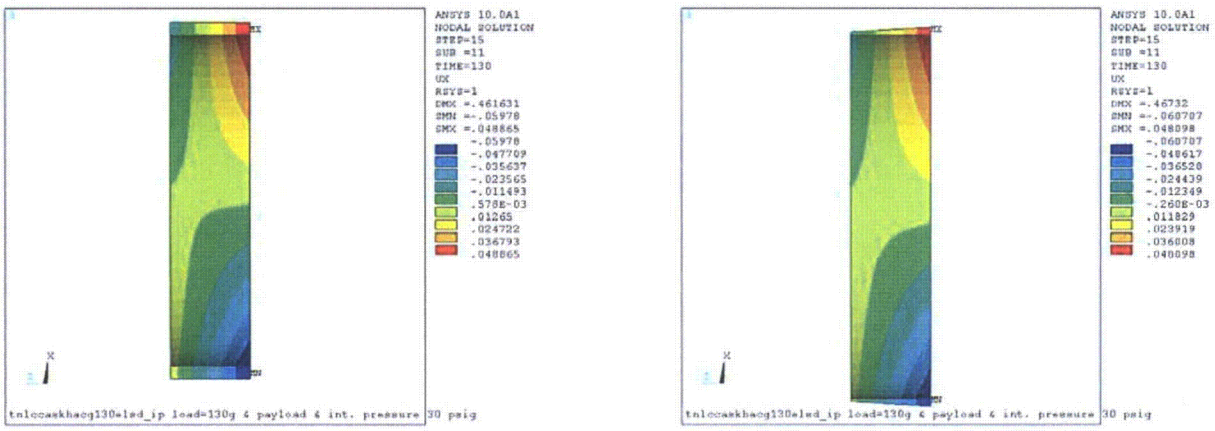

Radial Displacement: Gamma Shielding **Radial Displacement: Bottom Flange**

Figure 2.13.3-24
Radial Displacement Plot for 130G Side Drop (Cask Bottom End)