Official Transcript of Proceedings

NUCLEAR REGULATORY COMMISSION

Title: Advisory Committee on Reactor Safeguards
US-APWR Subcommittee Meeting

Docket Number: (n/a)

Location: Rockville, Maryland

Date: Friday, May 27, 2011

Work Order No.: NRC-927 Pages 1-149

NEAL R. GROSS AND CO., INC.
Court Reporters and Transcribers
1323 Rhode Island Avenue, N.W.
Washington, D.C. 20005
(202) 234-4433

1
2
3
4 DISCLAIMER
5
6
7 UNITED STATES NUCLEAR REGULATORY COMMISSION'S
8 ADVISORY COMMITTEE ON REACTOR SAFEGUARDS
9
10
11 The contents of this transcript of the
12 proceeding of the United States Nuclear Regulatory
13 Commission Advisory Committee on Reactor Safeguards,
14 as reported herein, is a record of the discussions
15 recorded at the meeting.
16
17 This transcript has not been reviewed,
18 corrected, and edited, and it may contain
19 inaccuracies.
20
21
22
23

UNITED STATES OF AMERICA

NUCLEAR REGULATORY COMMISSION

+ + + + +

ADVISORY COMMITTEE ON REACTOR SAFEGUARDS

(ACRS)

+ + + + +

MEETING OF THE US-APWR SUBCOMMITTEE

+ + + + +

FRIDAY, MAY 27, 2011

+ + + + +

ROCKVILLE, MARYLAND

+ + + + +

The Subcommittee met at the Nuclear Regulatory Commission, Two White Flint North, Room T2B1, 11545 Rockville Pike, at 8:30 a.m., John W. Stetkar, Chairman, presiding.

COMMITTEE MEMBERS:

JOHN W. STETKAR, Chairman

DENNIS C. BLEY, Member

CHARLES H. BROWN, JR., Member

HAROLD B. RAY, Member

JOY REMPE, Member

WILLIAM J. SHACK, Member

ACRS STAFF PRESENT:

ILKA T. BERRIOS

C-O-N-T-E-N-T-S

P-R-O-C-E-E-D-I-N-G-S

8:30 a.m.

CHAIRMAN STETKAR: The meeting will now come to order. This is a meeting of the United States Advanced Specialized Water Reactor Subcommittee. I'm John Stetkar, Chairman of the subcommittee meeting. ACRS members in attendance are Joy Rempe, Charlie, Brown, William Shack, Dennis Bley and Harold Ray. The Ilka Berrios of the ACRS staff is a designated federal official. The subcommittee will review Chapter 5, reactor coolant connecting systems of the safety evaluation report associated with the USAP design certification and the safety evaluation report associated with Comanche Peak combined license. We will hear presentations from the NRC staff, Mitsubishi Heavy Industries, Luminant Generation Company and Mitsubishi Nuclear Energy Systems. We received no written comments or request for time to make oral statements from members of the public regarding today's meeting. Subcommittee will gather information, analyze relevant issues and facts and formulate proposed positions and actions as appropriate for deliberation by the full committee. The rules for participation in today's meeting have been announced as part of the notice of this meeting

previously published in the Federal Register. Parts of this meeting may need to be closed to the public to protect information proprietary to Mitsubishi Heavy Industries or Mitsubishi Nuclear Energy Systems or other parties.

I'm asking the NRC staff and the Applicant to identify the need for closing this meeting before we enter into such discussions and to verify that only people with the required clearance and need to know are present. So, its up to you. If we get into issues that are proprietary to alert the subcommittee and we'll decide how to handle that.

A transcript of the meeting is being kept and will be made available stated in the Federal Register notice. Therefore we request that participants in this meeting use the microphones located throughout the meeting room when addressing the subcommittee. Participants should first identify themselves and speak with sufficient clarity and volume so that they may be readily heard.

We will now proceed with the meeting and I call upon Jeff Ciocco to begin.

MR. CIOCCO: Yes, good morning. Thank you. My name is Jeff Ciocco. I'm the lead project manager for the USAPWR design certification. Thank you for

having us back. Mr. Stetkar, this is our fourth USAPWR subcommittee meeting for a total of, I believe this our seventh chapter presenting to you and once again on a Friday and a good Friday I'll say. We'll do the individual staff introductions as we present our safety evaluation report to you after Mitsubishi and Luminant does. I just point out that the safety evaluation report was written to revision two of the DCD. As you know revision three came in at the end of March or early April this year. So that's also, so that is under review and once again, thank you for having us and I think we are ready to move ahead.

CHAIRMAN STETKAR: Great. Thank you very much. And I guess I'll turn over the meeting to Mitsubishi. I'm not sure who will take the lead at the moment.

MR. WILSON: My name is Con Wilson and I work with Mitsubishi. And the presentation that -- would you like me to speak louder.

CHAIRMAN STETKAR: Yes, just make sure -- pull the microphone a little bit closer to you there. They are pretty sensitive. If you are up front, this is kind of juggling act. Be very careful not to hit them with your paper because it explodes in our recorder's ears. But if you speak low make sure the

microphone is up front because it will help the transcript.

MR. WILSON: The material that's on the screen before us, there's a presentation we are going to go through in a few minutes. Let's go to the first slide please. My name is up at the top of this list, Con Wilson. My role today would be to present the material. Mr. Katsura?

MR. KATSURA: My name is Yosuke Katsura. I am nuclear NRC systems, Chapter 5 MNES.

MR. WILSON: And Mr. Fujimoto?

MR. FUJIMOTO: Good morning. My name is Hideki Fujimoto. I belong to Mitsubishi Heavy Industrials. I am Chapter 5.

MR. WILSON: And Mr. Ogino?

MR. OGINO: Morning. This is Takafumi Ogino, MHI.

MR. WILSON: And Mr. Hirota?

MR. HIROTA: Good morning. My name is Takatoshi Hirota. I am MHI. And I work for the engineering.

MR. WILSON: So during today's meeting these technical experts may provide, depending on what kind of questions there are, they may participate. The next slide please.

There is a list of acronyms in the handout. I won't read them to you but let me say they might come in handy during our meeting. Next slide. Next slide.

This slide summarizes Chapter 5, Section Heading and in the color on the right-hand side of this, the color gives you a sense what are open items. The yellow items are open items in the SER and the green items, there are no open items in those areas. In this presentation there are, there's a slide, I think for every item in this list. They are mostly just for information. So, but if you are interested in discussing them, please ask. As we go forward, but you can see the, there are not too many open items. And later in the meeting I believe the NRC presentation will cover some of the same material. So you can find out their view on this. Next slide.

USAPWR is a four loop configuration which is very familiar to all of us I believe. And Section 5.1 of this section gives a brief overview of it. There are of course four steam generators, four reactor coolant pumps, a pressurizer, conventional four loop. Let's go to the next slide please.

5.2.1 of Chapter 5 deals with compliance codes and code cases and the main thing I want to draw

your attention to is that the 2003 agenda, the ASME code, is what was, is the basis for the work that's going forward and there is an open item on this subject. This is an interesting one in the sense it is kind of a, well it's a special situation that I don't know that anyone else has seen. You see the open item, title, it deals with compliance with code cases, NCA-1140, Code Case N-782 and Reg Guide 1.84. The ASME Section 3 NCA-1140 disallows the use of code additions that are earlier than three years prior to the construction permit. And the R-COLA data, September 2008, implies a violation of this. The ASME issued code case N-782 to allow the code addition endorsed by the DCD, to sort of resolve this problem. But the code case isn't in Reg Guide 1.84. So, I think its just a matter of timing and in fact if the SER was written at a slightly different time period this wouldn't be an issue at all. But basically the plan is that the Code Case N-782 will be added to the DCD Table 5.2.1.2 along with a note of explanation justifying its use. Next slide.

5.2.2 deals with overpressure protection. The overpressure protection system has the following features, the pressurizer safety valves on four separate nozzles at the time of the pressurizer. For

like temperature overpressure protection provided by the containment spray residual heat removal pump suction relief valves that are installed in each train of the RHR system. All of the RAIs are closed in his section. Next slide.

CHAIRMAN STETKAR: What's the best way to organize our questions. For example, if we have questions on the overpressure protection, is it appropriate to ask those now? I was looking ahead in your presentation slides.

MR. WILSON: Let's say the order of the presentation is really pretty from front to back of Chapter 5.

CHAIRMAN STETKAR: Okay.

MR. WILSON: And I think it would be appropriate to when the topic pops up --

CHAIRMAN STETKAR: For example, now, if we have questions.

MR. WILSON: Yes. I think its appropriate and let me -- its possible that later in the presentation there are things that relate to it.

CHAIRMAN STETKAR: You can alert us to that then. I just wanted to makes sure --

MR. WILSON: It depends on what the question is.

CHAIRMAN STETKAR: You'll find if you've not presented before this subcommittee in the past, that we are not shy about disrupting your plans and jumping in and asking questions. So, I just wanted to make sure that I understand the kind of flow your presentation so that we didn't interrupt too much. With regard to the pressurizer safety valves, the standard pressurizer safety valves, I looked at the relief capacities, and I recognize that, I understand that there is sizing for design basis events. Has Mitsubishi performed any best estimate ATWS analyses? I recognize that anticipated transients with SCRAM are beyond the design basis event analysis. They are beyond design basis events. I was curious whether you performed any best estimate ATWS analyses and if so, whether you could comment on the relief capacity from the pressurizer safety valves to handle potential ATWS events, which can be rather severe as you know pressure transients. And if you haven't, that's a question we'll put on the table.

MR. WILSON: I'm not prepared to answer that question so let me, I think you asked it pretty clearly though. Can we make the question --

CHAIRMAN STETKAR: Absolutely. The way the subcommittee works is that if we can get a

question answered in real time today that's wonderful. If we can't we have a running list of questions that we raise. And at the end of today's meeting, we'll try to reiterate what the questions are that have, let's say have somewhat greater importance and then you'll be back for subsequent presentations either for the final SER with no open items on this topic or perhaps on other topics if you are prepared to provide answers. So we have that kind of running laundry list of questions that come up. If you are not prepared at this meeting to answer, you certainly have opportunities later.

MR. WILSON: One clarification on this specific question.

CHAIRMAN STETKAR: Yes.

MR. WILSON: Is it written down or will it be written down that has the proper context that you intend or is that something that we should just note at this point?

CHAIRMAN STETKAR: We, the staff can work with Ilka. We usually try to take some brief notes. But unfortunately in many cases you have to rely on the transcripts to get the context of the entire question. We don't formulate RAIs in the same sense that the staff does.

MR. WILSON: Some things are pretty structured, aren't they?

CHAIRMAN STETKAR: Yes. We are not quite that structured but if you do have questions, we can always get you clarifications through our staff.

MR. WILSON: Okay. Just maybe a chance for the technical team to maybe they have a response. I don't know.

MR. ONOZUKA: This is Masanori Onozuka. For this particular subject question. We don't have the stuff here. So we will come back to you and usually what we do is Mitsubishi has taken those. And of course after the meeting when its available, we also go through the meeting minutes and make sure your questions and we will provide you the responses to these questions as usual.

CHAIRMAN STETKAR: And Mitsubishi has been very good at doing that in the past. They have been very, very responsive. So that process seems to be working quite well.

MR. WILSON: Okay.

CHAIRMAN STETKAR: Is it the appropriate time to discuss the RHR suction relief valves and the low temperature overpressure protection provided by those? Is this the appropriate time in your

presentation to discuss those or is it better to discuss those when we talk about the RHR system itself.

MR. WILSON: Let me say I would prefer to get into the rhythm of the presentation and then --

CHAIRMAN STETKAR: Okay. That's fine.

MR. WILSON: Your right, it does, the topic comes up again.

CHAIRMAN STETKAR: Okay.

MR. WILSON: And so, next slide please. 5.2.3 talks about the pressure boundary materials. My perception of the industries that over the years we've really gravitated some very specific materials that are best in use of nuclear power plants. These, just the low alloy steels, the forgings are 508 Grade 3. There are some cases where plates used with the equivalent material properties in 533 Type B. Stainless steels are all based on experience with using them in this environment. So there are special attributes to minimize susceptibility to cracking and such.

MEMBER SHACK: Well obviously this is the one controversial point. Most of your material selections are very sensible. They seem to be best engineering practices for these materials. 316 LN is

obviously an excellent choice for piping and forging material. The question is your 316s. I notice all your cladding materials are low carbon. So, those are generally used in the places where in fact you have the best control over your PWR water chemistry. You know, its right in the reactor wrestle. You are careful to use law carbon materials but you allow higher carbon materials in the piping system which again you may have dead legs somewhere. You can't guarantee a low controlled oxygen everywhere. You've got illuminated carbon content but its an .05 carbon. And I got started in nuclear materials when GE was claiming that .05 carbon was good enough to stop stress corrosion cracking and I think there's kind of a universal agreement now that .03 carbon is just fine. You could have 316, with 316 properties with .03 carbon. I mean GE did it in the 70s and 80s as they replaced piping. They got essentially, basically a 316. You just control the carbon. You control the nitrogen. Its not LN. It is really 316 but and I just can't understand why we would ever build a plant with anything more than .03 carbon now.

MR. KATSURA: In PWR water chemistry dissolved oxygen content is controlled in variable content. No matter what the relationship with 5 ppb

and limited that is ppm. So basically the oxygen content is very raw. We have no, we have many 316 is using the limited carbon content. So, basically satisfied, we think it is satisfied.

MEMBER SHACK: Well then why are you so careful to specify low carbon for the cladding and the buttering?

MR. KATSURA: Cladding and buttering.

MEMBER SHACK: Is all low carbon. It sees the same water the pipe does.

MR. KATSURA: It use low carbon.

MEMBER SHACK: Yes and that's a good idea.

MR. KATSURA: Welding material use low carbon, the low carbon.

MEMBER SHACK: Why the inconsistency? Why do you specify low carbon material for the cladding and buttering and you are willing to tolerate high carbon material for the piping and the forgings? They both see the same water.

MR. KATSURA: The, not high carbon.

MEMBER SHACK: Well .05 carbon.

MR. KATSURA: The reason we use low carbon material and very oxygen is controlled concern. We use 0.05 carbon. So a limited carbon content.

MEMBER SHACK: but again you still, you require low carbon for the cladding and the buttering which sees only the 5 ppb carbon oxygen. The piping can see 100 ppb perhaps in some dead legs. It would seem to be even more important. I mean I could almost make an argument for 308 and for 309 cladding as long as you gave me low carbon piping.

MR. WILSON: Mr. Shack, may, if we go to the next slide, I think it will probably go deeper into this subject, if its okay. This one really, I mean this is a great conversation. I appreciate it and I understand your point and I, this next slide reflects 3 RAIs. They are closed now but they and you may be already aware of these. Forgive me if I'm repeating something you know. But these three although closed, we thought they were worth bringing to your attention for this meeting. The first one, which is question number 27, is on the subject of minimum preheat temperature. And this is for ferritic materials. There is a, I believe the section 3 specifies a 250 degree F minimum preheat for prevention of a hydrogen cracking condition. And Mitsubishi's approach is to, I think they limit it to minus, I mean 120 degrees. Mitsubishi presented experience, test data, as well as manufacturing

experience that was sufficient to justify this condition. That's the way that one was resolved. And the other issue was post baking. This is a process by which the hydrogen can be basically allowed to be removed after welding and then allowed delay time before the post weld heat treatment. This discussion took place and was satisfactorily resolved. But it was one of the RAIs that was significant.

The next one, number 29, bears directly to your question about carbon content or stainless steel. The limited carbon content stainless steel will be used.

MEMBER SHACK: I agree. .05 is better than .08.

MR. WILSON: Sure. Let me say that my understanding here is that if there is any region that is categorized as a stagnant region where the oxygen content might be elevated. In those cases, certainly this .03 carbon limit will be applied. But for in general, my understanding is that this Mitsubishi would use the .03 where its, there's no, even though its extra margin, the analysis supports the use of .05 in many places because of the ORs. But in any case, this question was raised and answered and regarding your question about inconsistencies, I can't answer

that question.

MEMBER SHACK: I'm at least glad you have the low carbon butter. I'm not really serious about that one. That is inconsistent. And here you know our prescience in determining bad chemistry regions, that's fine. But since there's no real penalty in cost and strength, I just can't understand why you wouldn't --

MEMBER BLEY: That's where I wanted to go. Can you tell us the advantage you see of using the .05? Why do you, what leads you to pick the .05? I was figuring it must be cost but its not. If its not cost, why?

MR. KATSURA: In the Japanese domestic plant we have been using for many, many years the .05 carbon content material. So we don't have experience any program so we will use this material.

MEMBER BLEY: So you don't see a problem but there's no real advantage to using it is what I think I hear you say?

CHAIRMAN STETKAR: I think the question that we are facing is going forward trying to license the plant that has an expected lifetime of at least 60 years, going forward from the point in 2011. There is material with known better properties. And Bill you

will have to correct me because as you know I know nothing about materials. But if there is a material with known better properties and there is no disadvantage either from a cost or an engineering standpoint from using that material, when why should we not use that better material, regardless of your historical experience with the 5 percent carbon material?

MR. KATSURA: One reason is the cost. And we have discussed with material vendors on this issue as well as, as a factor of experience. They have no experience in corrosion cracking. And the final reason as I said, in the control oxygen area, based on our experience, we use the limited carbon, limited carbon materials.

MEMBER SHACK: Well I don't think we are going to get an answer.

CHAIRMAN STETKAR: I think we hear your position anyway. Thanks. Proceed with your presentation.

MR. WILSON: We've noted your question and I think we can provide at least maybe a response that's more direct.

MEMBER BROWN: Just one side question. You said the intent as if you have stagnant regions which

you identified via your analysis then you most certainly used the .03 percent material as opposed to the .05 percent. So that's your intent. But is that captured in the DCD? Is that intent captured?

MR. WILSON: Excuse me.

MEMBER BROWN: You are just fine.

MR. WILSON: The answer is that the SER description says exactly that.

MEMBER BROWN: Okay.

MR. WILSON: So these kind of things I'm not certain about.

MEMBER BROWN: When it will be captured in the DCD?

MR. WILSON: Yes.

MEMBER BROWN: But it is captured in terms of your discussions with the staff in the OCR then?

MR. WILSON: Exactly the statement of the stagnant region, yes.

MEMBER BROWN: Okay.

MR. WILSON: Yes. The third item in this material that was, we've chosen to select to discuss today is this number 30. It says to avoid SCC susceptibility on cold work. This mostly was in the context of the reactor vessel and may have broader

application also. It had to do with residual stresses on the surface that might be high and the idea of keeping them as low as possible. That's really the line of questioning and this answer says buffing the J-groove weld into dissimilar weld metal is a, what it describes is a manufacturing process to either induce compressive surface stresses or at least to add margin against surface stress corrosion cracking. I'm not sure the best technical terminology.

MEMBER SHACK: Cold work on the surface?

MR. WILSON: Yes, that's the idea. So, this concludes, I think, the material part. Next slide.

5.2.4 titled in service inspection and testing. This, once again there's no open item in this area. However, issues in this area have to do with accessibility of equipment and personnel. You can see the major RAI that's closed is listed here. It has to do with that subject. The resolution was accessibility is provided in accordance with 10 CFR 50.55a(b)(2)(xv)(A)(2) and (B). I really don't have any more to say on that one. Next slide.

CHAIRMAN STETKAR: Under materials I had one, I'm trying to look through your presentation. The plant has a nominal design life of 60 years. I

1 understand you are going to have three or six
2 surveillance capsules installed for the vessel
3 surveillance, material surveillance. You proposed
4 schedule that shows removal of three of those capsules
5 should be sufficient to project materials properties
6 out through, I think its 60 effective full power
7 years. I don't know and perhaps Bill does, but
8 something that came to mind. We are facing in the
9 U.S. now License Renewal Applications for extending
10 licenses from 40 to 60 years. And I believe in some
11 cases, some of the applications have found that there,
12 the number of capsules that they have are not
13 sufficient because they've already used all of the
14 samples. The question I have is do you feel that the
15 six surveillance capsules admittedly what are
16 nominally three spares, does that provide you adequate
17 margin in case a licensee decides to come in for life
18 extension past 40 years or 60 years in the future? In
19 other words based on historical operating experience,
20 would the use of the surveillance materials, do you
21 feel you have adequate margin for that possible life
22 extension type process. And Bill please, if its not
23 a valid question because it was something that came up
24 late last night.
25 MR. HIROTA: Name is Takatoshi Hirota.

A surveillance program schedule is requirement with schedule with ASDM, 1.8.5 and STM. We plan to resolve this recapture and also the capture of the ratio and from 2.2.3. So capture will approximately 60 year program.

CHAIRMAN STETKAR: I understand that. But what I don't know because I'm not familiar with materials or actual operating experience. There are some statements in I think I don't recall whether I read it in the DCD or the COL FSAR, that said plans for use of the three spare capsules would be developed as necessary based on the results of the nominal surveillance interval. What I don't know is what is actual plant operating experience. In other words do you expect at the, when we get out to for example, something close to 40 effective full power years, when you are trying to project out to for example maybe 80 years or more, do you expect to have sufficient material capsules left at that time, just based on normal operating experience? What has been your experience in terms of the need to use those extra installed spares over the nominal, let's say 40 to 60 year life of the plant?

MR. WILSON: I understand your question. I think this sounds like a really good question --

CHAIRMAN STETKAR: There are installed spares there but the one I thinking, this is kind of a practical consideration because indeed for some plants we have faced that problem here in the United States, that people are applying for life extension beyond 40 years. And they have effectively used all of their surveillance coupons.

MR. HIROTA: So now we expect 60 years of plant operation so that a subcapture we have covered that 60 years. But plant operation extend to 80 down to one capsule will be needed.

CHAIRMAN STETKAR: But you understand my question is that if I get out to 40 years and I've already used the other three spares for whatever reason. And I don't know. I actually don't know what real operating experience has been. It probably does more --

MEMBER SHACK: You can always postulate there will be some need for it and there will be some unexpected development with their materials. Based on what you expect to happen, this is an ample -- They pick materials that have been controlled as far as you know, I think they've addressed our known mechanisms of reactor pressure vessel. You know you always worry that as you go further out, there's another mechanism

that you haven't addressed yet, which is why we have the lead capsules. But you can't guarantee no surprises will occur. But I think the plant, you think the margin is adequate and reasonable?

MEMBER SHACK: Yes.

CHAIRMAN STETKAR: He knows a lot. If Bill is comfortable that we have adequate margin, that's probably good enough. As I said it was something came to mind only because we had been involved with a license renewal process here.

MEMBER SHACK: So it wasn't well thought about.

CHAIRMAN STETKAR: That's right. Some applicants, its been necessary for some applicants for license renewal to become somewhat creative about where they obtain their projected materials properties. Okay, continue. Sorry for the interruption.

MR. HIROTA: Excuse me. The Japanese domestic plant, we plan to extend to the 60 year operations. So as same PWR, capsule, in a 40 plan schedule. We have covered 60 years. So we have never used spare capsule.

CHAIRMAN STETKAR: Okay. So your operating experience in Japan has been you've never

the spares?

MR. HIROTA: Yes.

CHAIRMAN STETKAR: Okay, thanks that helps. That helps a lot. Thank you.

MR. WILSON: Back to the presentation. This Section 5.2.5 deals with leakage detection to the pressure boundary. In RCPK leakage is classified as either identified or unidentified leakage. Detection of the identified leakage there are several ways that are monitored by containment vessel reactor coolant drain tank, pressure, temperature and level indications. The unidentified leakage that's monitored by air particulate radioactivity monitor and airborne gaseous radioactivity monitor, air cooler condensate flow rate monitoring system and containment sump level and flow monitoring system. I'll also add that there are many valves which have downstream thermocouples to measure if there is leakage of the valve, those kinds of things, a part of this leakage detection program. There are no open items on this subject. There was a question that is listed at the bottom of this page. The resolution of it was a leakage management procedure. It will be developed as operating an emergency operating procedure.

CHAIRMAN STETKAR: Con, before we get to

the vessel. I have a question. I went through all the systems and there's a very good summary in the DCD about the leakage detection provisions for interfacing system, the RHR system, accumulators, the safety injection lines, reactor vessel head vents and the reactor vessel head seals. With the exception of the head seals, the O ring seals, where forever, I think there has been monitoring of leakage both between the two seals and on the outboard side of the second seal. Of your leakage monitoring is outboard of the second isolation valve. In other words, you must have leakage through both isolation valves, whether they are both normally closed motor operated valves, or two check valves or a combination of a check valve and motor operated valve. All of the leakage detection is downstream if I will, outboard let's call it, away from the reactor vessel from the second isolation valve. So it will only detect leakage if both of those valves leak. It will not detect leakage through the first valve. So its kind of an after the fact leakage monitoring system as opposed to the reactor vessel closure head O ring seal leakage monitoring which is an interim predictive because if you get leakage through the first O ring, you detect it. And I guess my question is why, first of all why have you

designed the leakage monitoring system that way for the interfacing systems, RHR and the number of systems? And are there any provisions to detect leakage through that first isolation valve whether it is in the connection to the reactor coolant system, whether it's a check valve or a normally closed motor operated valve or whatever the specific device is?

MR. WILSON: So let me repeat what I think your question is. In the case the reactor vessel two O rings, there is leakage detection between them and downstream so you have, you know what's happening in both states.

CHAIRMAN STETKAR: In other words you have predictive capability. If you have leakage through the first one, you can alert the operators to the fact that it is leaking before the second one starts to leak.

MR. WILSON: And I the case of, in other systems away from reactors, there are many cases where we have double, two valves, sort of a redundant arrangement with detection downstream the second.

CHAIRMAN STETKAR: Right.

MR. WILSON: And you are asking why isn't there a thermocouple to detect between the two?

CHAIRMAN STETKAR: I don't want to

presume the type of design.

MR. WILSON: I am only trying to verify the question.

CHAIRMAN STETKAR: That is exactly right. The question is --

MR. WILSON: The idea is that there is a precedent in the reactor vessel you are thinking of and now we have a case of two valves and we detect downstream of the second.

CHAIRMAN STETKAR: That's right. Why not between the two to give me an indication that the, you know, an early warning that the first one is leaking?

MR. WILSON: I'm not sure we have anyone here who can answer this.

MR. OGINO: This is Ogino. Our design, two valves, first for example, for plastic valve -- we designed equipment -- so this is the same activity as with system. So, the important point is -- so our design is, we think, there is no need to check.

CHAIRMAN STETKAR: I think, let me make sure that I understand what you said. That, I think that you said that the piping between those two valves is designed to withstand primary system pressure. Is that correct?

MR. OGINO: We design for, same design

concept. So have same activity.

CHAIRMAN STETKAR: So the class break if you will the class break in the piping system is outboard of that second isolation valve. Is that what you are saying?

MR. OGINO: Yes.

CHAIRMAN STETKAR: Okay. I understand that. However, if I'm an operator of a nuclear power plant and I develop a leak, if I develop a leak in that first valve, it would seem to me that I would like to know that situation before the second valve starts to leak. And in your design, at least, I don't know whether I have leakage through the first valve. I only know that I have leakage through the second valve. Hopefully it is small leakage that would be detected quickly so I don't over pressurize the lower pressure piping. But the question is from an operational perspective, there is apparently an active decision was made about why to install the leakage detection monitoring systems where they are installed and I'm asking from an operational perspective. Was any thought given to the detection of leakage through that first valve regardless that there are probably no danger of the pipe failing itself? But to inform the operators of that first leakage, in the same sense as

the reactor vessel head seal and O rings where you give the operators the early warning of leakage through the first seal.

MR. OGINO: I understand your comment but I respond later.

CHAIRMAN STETKAR: Okay, good.

MR. WILSON: Next slide. Section 5.3, the reactor vessel and I believe you are already familiar with the design but let me just point out a couple of highlights. The bottom head does not have any nozzles in it. It is all forged construction. And the weld seams and the irradiated area are eliminated. There is one that's in the lower end of the region where the core is. This figure is difficult to see. But in any case their weld seams are moved away from the, they are not, there is only one weld seam that is in the irradiated region and its at the edge of it. Next slide.

5.3.2 deals with the reactor vessel pressure and temperature limits. These two figures that you see are from the DCD Chapter 5 and basically the left, the figure on the left, is P-T limit for heat up and the one on the right is for cool down. And the calculations are based on the 60 year effective full power years. Let's go to the next

slide that deals with this subject also.

The RT PTS values in the plant life are evaluated and satisfied 10 CFR 50.61 screening criteria. On this slide below the table you can see the screening criteria says for forging 270 degree Fahrenheit and for weld materials 300 degree Fahrenheit. And you can see on the table on the right-hand side that the RT PTS 60 year value is well below those criteria, which is a good result. The main reason the numbers are this good is because of the neutron reflector that's in the core and the shell which is really an important, I think, enhancement for the reactor vessel. Next slide.

In this case, there are let's see two open items. The first one, let me just read it. Generic P-T Limit Report with bounding P-T limit curves based on bounding material properties and projected fluence, following the guidelines of GL96-03. This was a RAI question but the answer was not factored into the SER. But it was answered, the second bullet there says MHI submitted this P-T report and it just hasn't been incorporated at this time. That's all. The next item, the P-T limit for the reactor vessel are based on evaluation of the reactor vessel beltline and closure flange reasons. Explain how this relates to

the nozzles and the remainder of the RV. The response is that the RV fracture mechanics evaluation addresses limits for the entire RV including nozzles is in process. The fracture mechanics analysis comes after the stress analysis and there's a lot of, the stress analysis is not yet complete of all of these parts. But this is also an in process and I think consistent with. The beltline region was presented first because it was generally most interesting information to start with. Let's go to the next slide.

5.4.1 deals with reactor coolant pumps and under this the RCP they supply coolant flow necessary to remove heat from the reactor core and transfer it to the steam generators. The shaft seals that employ well established seal systems that has been proven in many operating plants. The flywheel design meets the Reg Guide 1.14 requirements for these different kinds of analyses. It has an ISI interval set at 20 years and the fracture mechanics analysis shows the probability of flywheel failure is negligible. Next slide.

MEMBER SHACK: Just on that and I looked at the probabilistic fracture mechanics report. All the flaw information comes out of the, some sort of pressure vessel work. Why is that completely

applicable to the flywheel?

MR. WILSON: Well let me, the flywheel material is 533 plate, which is a very, a material used in pressure valves. So in that sense its, there's applicable --

MEMBER SHACK: But are the fabrication techniques the same when your making the pressure vessel plate versus the flywheel, the machining?

MR. WILSON: The flywheel is a flat, flat plates bolted together that are basically cut circular in the machine and they meet the same kind of requirements as far as volumetric inspection. They are very carefully manufactured to be flawless if you will. Comparing to our pressure boundary 533 which is the curve plate, I don't know that there's a difference.

MR. KATSURA: For the question material obligation the pressure boundary.

MEMBER SHACK: So that my flaw distributions would be expected to be.

MR. WILSON: We look at the fracture mechanics evaluation and how it is, if its based on a pressure boundary material, if this is a flywheel and its really looking for, just a question of applicability, the method really applies to a

flywheel.

MEMBER SHACK: Well the method certainly applies. The flaw of the actual data, you know --

MR. WILSON: I see, so how the flaw would be distributed in a flywheel versus how it would be distributed --

MEMBER SHACK: Right, the density and the size distribution. I mean, you literally use the flaw distributions from the vessel for that analysis.

MR. KATSURA: This comment later.

CHAIRMAN STETKAR: I had a question also on the flywheel integrity and this may be obviated by the probabilistic fracture mechanics analysis that was done. The nominal speed of the reactor coolant pump is 1200 rpm and for an overspeed during LOCA analyses, you take credit for the leak before break analysis, at least in the deterministic analysis to justify that the limiting overspeed would be 1500 rpm, 25 percent larger. I didn't look the probabilistic fracture mechanics. Do they look at ranges of overspeed greater than 1500 rpm in that analysis Bill?

MEMBER SHACK: I don't remember that now.

CHAIRMAN STETKAR: I mean the question is what would the, if you didn't take credit for the lake before break, what would the maximum overspeed on the

LOCA conditions be? And that's why, I wasn't sure in the probabilistic fracture mechanics, the range of speed, whether they looked at any chance that it was greater than 1500 rpm. I did look at the deterministic report. And there it is strictly limited to 1500 rpm which is the same speed that they are actually going to test flywheel.

MR. FUJIMOTO: Excuse me, we expect, we estimate for overspeed. We sent 135 for normal speed. That 1500 rpm. And in this case, we calculate fracture criteria and that's our calculation provided.

CHAIRMAN STETKAR: I understand that but my question was, unfortunately I'm not either a materials person or am I an hydraulic engineer. So I really don't understand quite how these things work in practice. But if you, in the deterministic analysis, its very clear that says because of the leak before break assumption, the maximum overspeed of the pump is limited to 1500 rpm. And my question what influence on that maximum overspeed does the leak before break assumption have? What is that influence? In other words if you did not apply the lead before break assumption, would, what would the maximum projected overspeed of the pump be and how would that affect then the critical crack size and its growth? If you

don't do deterministically, how have you counted for that in the probabilistic world where there is some chance that it might not apply?

MR. WILSON: Let me say that the, on the next slide there is an item that bears directly on this subject.

CHAIRMAN STETKAR: Okay.

MR. WILSON: I want to speak to it and then let's I think we might be able to satisfy your question.

CHAIRMAN STETKAR: Okay.

MR. WILSON: There are two open items related on the pump. The first one, there were two RAI questions that were wrapped up in one open item, open item number two. The staff requested additional information about a critical flaw size associated with 1500 rpm design speed. Let me comment. They asked this because the information provided by MHI was that at much higher speeds. They basically had numbers that went to basically as a function of flaw size and run into the, you know, how big, the numbers were very big, much bigger than 1500 rpm.

CHAIRMAN STETKAR: It is?

MR. WILSON: In their evaluation.

CHAIRMAN STETKAR: Okay.

MR. WILSON: So there is a curve and this, in any case, then the subsequently compelling question that you will find in the SER in this was reliable detection threshold. So you've really got how small can you see and how big are you at 1500. And you are really looking for this distance between them because the original answer is really showing the upper end of the speed that we go with the small flaw. So, that's the question you are asking, has an answer. It has been exchanged with the NRC in conversations.

CHAIRMAN STETKAR: So you are saying that the MHI has done analyses to look at growth at speeds greater than 1500 rpm? I mean in terms of probabilistic fraction mechanics analysis which you use for determining the inspection intervals. There must be some probabilities assigned to those speeds of greater, a range of speeds from 1200 rpm nominal out to whatever was looked at, around 1500.

MEMBER SHACK: Normal operation is 1200 with a standard deviation of 120. The overspeed is 1500 with a standard deviation of 150.

CHAIRMAN STETKAR: They do allow --

MEMBER SHACK: They do allow --

CHAIRMAN STETKAR: Exactly with the justification.

MEMBER SHACK: Yes.

CHAIRMAN STETKAR: That's a different question but there is --

MEMBER SHACK: There is a distribution.

CHAIRMAN STETKAR: Okay.

MR. WILSON: The point being -- I can't speak to the probabilistic dimension but to determine part of your question, there is information has been discussed.

CHAIRMAN STETKAR: Okay.

MR. WILSON: And you see the response to that.

CHAIRMAN STETKAR: Okay.

MR. WILSON: The 1500 design speed has a critical flaw of greater than three inches.

CHAIRMAN STETKAR: Yes. I understand that. I'll fall back on my deterministic question back to the probabilistic fracture mechanics since that --

MEMBER SHACK: I like that three inches at 1500. That's the one that makes me feel good.

CHAIRMAN STETKAR: I'm not saying I'm concerned about this. I'm just raising a question about how far did the analysis look beyond that nominal 1500 rpm overspeed limit, which is essentially

in the deterministic analysis a fixed limit. I recognize you've submitted the probabilistic fraction mechanics and the staff with the exception of that one open item has accepted the probabilistic fraction mechanics as a basis for the inspection interval. So therefore the question then evolves into what's the justification for the probability distribution that's assigned around that overspeed, that 1500 rpm overspeed and has that adequately captured the probability of perhaps higher overspeeds. So, as far as my deterministic question, I think I'm satisfied. Thank you.

MR. WILSON: The next open item, additional information was requested. And this has to do with the RCP, operability without seal injection water. This one, so we are off the subject of flywheel, okay. We are now on the subject of, we're still on pumps --

CHAIRMAN STETKAR: Continue, these side conversations go on.

MR. WILSON: The question, one of the questions was is there a low flow alarm in the main control room when there is a loss of seal injection water and the other question was how long can the RCP operate without seal injection water? And the

response is in process at the moment. However, the answers are straightforward. There is a flow alarm in the main control room from a flow meter in the seal injection line. And subsection 5.4.1.3.3 refers only to the loss of seal injection flow. The RCP can operate indefinitely without the seal injection water because of the redundant cooling offered by the thermal barrier heat exchanger. And I would just add that indefinitely the DCD text says maintain safe operating temperatures and operates safely for safe shutdown of the pump. So, but really the redundant cooling is present. But that was the answer, is the answer being constructed.

CHAIRMAN STETKAR: Okay. We're going to have now several questions here so this will take some time. Why don't you get through your next slide because the next one will partially address some of these questions.

MR. WILSON: All right. The next slide. Thank you. This one is the third open item related to the pump. And the title was RCP operability without component cooling water. The question was since the component cooling water, CCWC supplies cooling water to both chemical volume control system, pump motors, seal water cooler and oil cooler and the thermal

barrier. Explain the meaning of loss CCW. And the second part is identify the DCD section dealing with operator instructions for loss of CCWN seal injection. This is another case that's in process. However, subsection 5.4.1.3.4 is intended to address loss of CCW to the motor bearing oil coolers or the thermal barrier heat exchangers independent of each other. It was not intended to mean loss of all CCW but the way it was written, it's the title didn't distinguish.

CHAIRMAN STETKAR: Well let's rather than trying to refine words in a subsection of the DCD, let's talk about reality. In reality there are two component cooling waters. They are a and c. One lube supplies two of the reactor coolant pumps, all component cooling water to two reactor cooling pumps. Bearing oil coolers, motor oil coolers, thermal barrier coolers and one of the two charging pumps that suffice the oil injection flow. So, if I lose component cooling water in one of those two loops, I lose all component cooling for at least one of the charging pumps and all component cooling water for two reactor coolant pumps. That's not loss of all component cooling water in a deterministic sense where you've lost all four trains of your component cooling water system. It is loss of component cooling water

flow in one of those two specific cooling water loops. The question is what happens to the reactor coolant pumps under those conditions? In particular what happens to the seals due to thermal conditions because you are now losing both seal injection flow and thermal barrier cooling? What happens to the seals from a mechanical standpoint because if the reactor coolant pump remains running because after loss of oil cooling at least, after some period of time, start to develop reasonably severe vibrations which can cause mechanical damage to the seals. So it's a fairly complicated process and you can't answer it by simply partitioning up if I lose cooling to the motor cooler, I have this or if I lose cooling to the oil cooler, I have this or if I lose cooling to the seal cooler, I have this or if I lose seal injection I have this other condition. Its an integrated analysis.

MR. WILSON: In the context of Chapter 5, the intent was to look at the loss of CCW to these individual entities as a separate item.

CHAIRMAN STETKAR: I understand that but from an ACR's perspective I'm asking you to answer the question, what happens if I lose, let's just take all component cooling water in one of those loops rather than trying to get more generic and say loss of all

four trains or anything like that. Because the way this component cooling water system is designed, you do indeed have these two, let's call them ancillary loops that provide cooling to both the charging pumps and the reactor coolant pumps, divided a charging pump on each loop and two reactor coolant pumps on each loop. So, from our perspective we're interested to learn what would be the reactor coolant pump response both in terms as I said, possible thermal failures of the seals if the pump is running and the pump is stationary and possible mechanical failures of the seals due to vibration induced failures because of the bearing oil coolant.

MR. WILSON: But in a context of a single pump, let's just take for a moment. The plant's there but the single pump, the loss of all CCW to the pump, to the one pump is a way we can frame the question to focus --

CHAIRMAN STETKAR: That's fine as long as you can account for the fact that will also disable seal injection flow.

MR. WILSON: Yes, that's okay.

CHAIRMAN STETKAR: Okay.

MR. WILSON: I'm just trying to frame the question in a way --

CHAIRMAN STETKAR: Yes, if you, put it down to a single pump. That's fine.

MR. WILSON: So the question really is and I'm not sure we can answer it today but we can definitely take it back and give you an answer. However, I just want to clarify the question. It really has to do with if we can isolate on a single pump. What is the responsibility if all the CCW or coolant water stops simultaneously?

CHAIRMAN STETKAR: Right.

MR. WILSON: Okay, that's the question.

CHAIRMAN STETKAR: That's the question.

MR. WILSON: I'm not sure we have --

CHAIRMAN STETKAR: And let me make sure I clarify. There's kind of two parts to that question. One part, let me make sure I understand how the pump's protection works. Are there any automatic trips of the reactor coolant pumps on -- well let me just stop there. Are there any automatic trips of the reactor coolant pumps? I mean other than circuit breaker protection and those types of things. In particular on high temperature or of bearings or high temperature of seal water return flow or high component cooling water temperature, those types of trip. Does this design have anything? I didn't read

about them but I also did not read all of the instrumentation control.

MR. WILSON: I'm not sure.

CHAIRMAN STETKAR: And if there are no automatic trips, then I have to rely on the operators to trip the pump manually within a timely manner.

MR. OGINO: This is Ogino. Our RCP is tripped by, for example, some are, I think temperature is either high or some vibration.

MEMBER BLEY: They are, automatic trip?

MR. OGINO: Automatic.

MEMBER BLEY: Which temperatures?

CHAIRMAN STETKAR: And where is that documented? It is not document in Chapter 5 of the DCD. Well Chapter 5 of the DCD only says that the reactor coolant pump would be tripped, there's a ten minute time window if you lose cooling to the motor. And that the reactor coolant pump would be tripped after the reactor is tripped. But its not specific about whether a human being would effect that trip or whether it would occur automatically.

MR. WILSON: Automatic versus manual.

CHAIRMAN STETKAR: Automatic versus manual.

MR. OGINO: We have automatic trip. I

1 don't know all electrical problem.

2 MR. WILSON: We'll confirm later.

3 CHAIRMAN STETKAR: Okay that's good.

4 Because, the reason I am concerned about the automatic

5 trip is that if I back up to my original question

6 about what are the effects from loss of all component

7 cooling water to the pump I have seen many analyses

8 that have different answers about the timing and the

9 extent of failure depending upon whether the pump is

10 running and remains running after that loss of cooling

11 water or the pump is tripped and your down on the

12 stationary seals, the two and number three seal. The

13 timing and the extent of potential leakage through the

14 seals can be very, very different. So the existence

15 of an automatic trip or not is an important factor

16 there and my original question would be if there is no

17 automatic trip, I'm interested in the answer to the

18 question of what is the pump response to loss of all

19 component cooling water if it remains running and what

20 is the response if its tripped. If there are

21 automatic trips, I'm a little bit less concerned about

22 the response while its running because the automatic

23 trip would need to fail provided that, as Dr. Bly

24 mentioned, provided that set points for those

25 automatic trips are at adequate margin to protect

either the bearings or the seals or whatever they are protecting. So, I know that's a long kind of statement of concern and if you have questions, I would like to get them clarified because this can be an important issue as you are probably well aware, reactor coolant pump seal load can be important contributors for overall plant risk. So its important for us to understand kind of the integrated, to understand how the seals themselves are designed but how the integrated, to understand how the seals themselves are designed but how the integrated seal protection and cooling.

MEMBER BLEY: And the DCD seems to talk more about the motor than about the pump itself.

MR. WILSON: So there are two parts to your question, just to clarify. The first has to do with whether or not the RCP has automatic trip or a manual trip. And I guess they are both, or maybe one or both but nevertheless the idea is that you want to clarify that. And one of them, if its either one of those lead you to another question.

CHAIRMAN STETKAR: Well if there is an automatic trip, kind of part A to the automatic trip is what are the specific trip signals and what are the set points so that we have assurance that the trip

would occur, that the trips of points have reasonable margin to protect either bearing damage or seal damage and there are those two mechanisms of potential seal damage from either mechanical damage due to bearing vibration or a thermal damage to the seals itself. If there is a trip as I said part, the subpart under that question is what are the trip signals and what are the set points? If there is a trip I'm less concerned about the progression of an event from losing cooling water with the pump running, remaining running because you would the trip to fail for that.

MEMBER BLEY: But if they get the answer. Let me put this in a little perspective. There have been two events. One in an operating plant and one in an experimental situation in the last couple of years that have kind of put a highlight, spotlight on situations in which it can be really difficult for the operators to catch this loss of component cooling water because it is often associated with other things going wrong. So there is a real safety point to this question.

MR. WILSON: Thank you. We'll provide a response.

MEMBER BLEY: And I guess repeated back, don't lose the fact that we've lost seal injections.

MR. WILSON: Right.

CHAIRMAN STETKAR: That's just a warning because if you come back and say well we still have seal injection, we're going to send you away and ask you to come back with the other answer.

MR. WILSON: So another way of saying is that the pump has lost all cooling. Is that what you wanted to just say?

CHAIRMAN STETKAR: That's about it.

MR. WILSON: Okay. Next slide. 5.4.2 deals with steam generators. There are no open items in this area. I will comment that I think you may be aware that this is one element in the plant that has been, even though we might not have built many new plants in the U.S. in recent years, we have built replacement steam generators for a steady time period. And the design of the steam generators has really matured into being very well suited for the PWR environment. So, all the features that have been very much, I guess at this stage I would say field proven, have been incorporated into the APWR steam generators.

MEMBER BLEY: What's the experience on your steam generators, the newer designs like you are talking about, how long have they been in service in replacement?

MR. WILSON: It's an interesting question. I guess the first --

MEMBER BLEY: We thought the original ones were pretty good until they sat there for a few years.

MR. WILSON: Interesting question. Let me just comment that the replacement steam generators, I'm debating to answer your question in the context of U.S. or Japan. In the case of Mitsubishi, Japanese replacement steam generators began in about maybe around late 1980s and been preceded by many replacements in the rest of the world. So they had the benefit of the printed 690 material which is the thermal 690 is the best material alone at this time for steam generator tubing. That material had experience, I think the first plant with it was 1985. So you ask yourself is that long enough. We replaced with 600 material after seven years of operation. So, just to know, the old tube materials, 20 percent plugging, that short time. But the Mitsubishi steam generators with these features have operated, they have a better operating record than any fleet in the world, less tube plugging and tube plugging these days is not for corrosion on 690. Its for things like maintenance mistake where a tube was damaged during

sludge lancing or something. There are some ADD wear in other vendors fleets but at this time there is no tube wear in the Mitsubishi. So still your question is have they operated long enough with these features? I'd say yes.

MEMBER BLEY: So you are telling me that in an operation of 20 years?

MR. WILSON: 690 itself, since 1985.

MEMBER BLEY: Okay.

MR. WILSON: That's the first one. That was actually in the U.S. The first plant --

MR. KATSURA: At the unit 3 we have used the TT 690 material tubing. After that, our steam generator always used TT 690. We have no experience -- many export steam generators and domestic steam generators after unit 3 all using TT 690 tubing.

MEMBER BLEY: Okay, thank you.

MR. WILSON: Steam generators have many, a long history of different things and the designs of all the elements reflect the proven counter measures. Next slide. 5.4.10 deals with the pressurizer. The pressurizer for APWR is very similar in design to those of other U.S. plants. The water volume is sufficient to prevent uncovering of the heaters following a reactor trip or turbine trip and the steam

volume is large enough to prevent water relief through the safety valves following the feed line break event. So, this gives you a sense of the heaters at the bottom, spray nozzle at the top and the safe depressurization valve nozzles at the top. Let's go to the next slide.

The pressurizer relief tank, designed to cool and condense stain discharge from the pressurizer safety valves.

CHAIRMAN STETKAR: Con, on the pressurizer only because I can't figure out where else to ask it, before I get to PRT, this table in the DCD that shows the high pressure reactor trip set point of 2385 psig on normal operating pressure, 2200 35 psig and a low pressure reactor trip set point of 1,865 psig. Do you happen to know what the low pressure safety injection set point pressure is? I looked for it. Its kind of curiosity but I wanted to see what the margin was between the reactor trip set point and the safety injection set point. That safety injection set point is not listed in Chapter 5 and I couldn't quickly find it anywhere in Chapter 7.

MR. WILSON: Okay, let's I want you to repeat that slowly.

CHAIRMAN STETKAR: Okay. What I'm

looking for is what is the low pressure safety injection set point pressure?

MR. WILSON: If I may, there's a band, there's a man and min.

CHAIRMAN STETKAR: Oh, no, no no. I'm not looking, the nominal reactor trip set point is at 1,865 psig. Normally the safety injection set point is at some margin below that. And I'm asking what is the margin -- what are the two set points? I know what the reactor trip set point is because that's actually specified in Chapter 5 of the DCD. I could not find the safety injection set point. That is not listed in Chapter 5 nor could I find it any where in Chapter 7 in the I&C, a specific number.

MR. WILSON: It must be in 15.

CHAIRMAN STETKAR: It may be, but I ran out of steam.

MR. WILSON: Chapter 15 has this information.

MEMBER BLEY: It almost has to if you've done the analysis.

MR. WILSON: The problem is we don't --

CHAIRMAN STETKAR: That's right. I didn't look in Chapter 15 because I ran out of steam and I thought you might have the information

immediately at hand.

MR. WILSON: We will respond later to that question okay.

CHAIRMAN STETKAR: Okay. That should be an easy question. There's no intrigue on this. I'm just looking for what that margin is.

MR. WILSON: The next slide. 5.4.11 deals with pressurizer relief tank. In the event of excess pressure in the relief tank, rupture disk discharge into containment. In the pressurizer relief tank, rupture disk capacity is greater than the combined capacity of the pressurizer safety valves. This is just a summary of this tank. Next slide.

There are two open, three open items on this that relate to this section. The first one is for item one. Provide information, additional information about the PRT and the rupture disk. Basically the question is rupture pressure versus the PRT design pressure. Then the next is ruptured disk flow capacity versus the combined capacity of the pressurizer safety valves. And the third has to do with the external pressure design or design pressure for the PRT. These are just, I'm not sure of the history but these questions came up at a time after the SER was, I mean it didn't get answered before

that. We're working on a response but basically you can see the information was readily available. The rupture disk design pressure is 190 psi plus zero minus five percent and the design pressure is 200 psig. So, the pressurizer safety valve maximum flow which is in Chapter 5 is 432,000 pounds per hour and there are four of them. And the rupture disk are sized to a flow greater than this value. The PRT is required to meet the ASME Section III rules for external pressure. The delta P, design pressure is 15 psi. So, I anticipate this will go with, based on these answers to those questions. The next open item identify a reference and provide a description that shows the PRT rupture disk did not pose a missile threat. And the responses in preparation but the rupture disks on the PRT form, they perform their pressure relief function without producing a missile of any type. So, I think this is one of the cases where there is sort of a documentation confirming. Next slide.

Provide a description, this is the third and only last open item on this, on the PRT, provide a description and identify a reference where satisfaction of Reg Guide 1.29 Position C.3 and SRP Acceptance Criterion 2.F are addressed. These deal

with the interface between seismic category one and seismic category 1. SS2. And this is in process, the APWR SSCs comply with these requirements and additional documentation will be provided. So, clarification is in process. Next slide.

CHAIRMAN STETKAR: Okay, Con.

MR. WILSON: Yes.

CHAIRMAN STETKAR: Let me interrupt you here because you are going to start talking about the residual heat removal system. We're fine for time. I mean, we're not pressed for time at all. We originally had a break scheduled at 10:15 but to avoid interrupting your presentation and our questions about this particular system, what I would like to do is take our break now and then come back and discuss the RHR system and remaining topics after the break.

MR. WILSON: Okay.

CHAIRMAN STETKAR: So what I would like to do is recess until 10:15. We'll come back and pick up the RHR system then.

(Whereupon the foregoing matter went off the record at 9:59 a.m. and resumed at 10:16 a.m.)

CHAIRMAN STETKAR: Okay, we're back in session. I guess we'll address the RHR system.

MR. OGINO: I'd like to respond with set

point. Out initial set point is 1860 psia and the 1760 psia.

CHAIRMAN STETKAR: 1760 psia?

MR. OGINO: Yes. This is described in Chapter 15.

CHAIRMAN STETKAR: Okay.

MR. OGINO: Table 15.0-4.

CHAIRMAN STETKAR: Thanks. I didn't have a chance to look at Chapter 15. 1760 psia. Thank you very much. That is a reasonable margin.

MR. WILSON: The next slide deals with Section 5.4.7, residual heat and removal system. The design concept, there's a figure shown here. The RHRS transfers reactor core decay heat and residual heat from the RCS to the essential service water system through the CCWS. The RHRS is used to transfer refueling water between the refueling cavity and the RWSP during refueling operations. The RHRS is a safety related system consisting of four independent loops by sharing portions with the containment spray system.

CHAIRMAN STETKAR: Let's let you finish the open item and we can go back to other questions.

MR. WILSON: Thank you. Next slide. There is one open item on, in the SER for this

subject. Let me just comment that it says that current treatment of gas accumulation issue with respect to the USAPWR is substantial and appropriate. However, important aspects of this issue, potentially will remain unexamined and we will have more discussion with the staff to clarify what is required to deal with this.

CHAIRMAN STETKAR: I'm going to ask you a couple of questions about that topic also, for clarification. I read that in the SER and I want to make sure that I understand the issues.

MR. WILSON: It may be that because that presentation deals with some of the content that maybe answered there and maybe the discussion might be. In any case, whatever you choose. The next slide please.

CHAIRMAN STETKAR: Let's stop and go back because I have several questions about the RHR system. The first question, I have a couple of questions for just technical facts. Is the RHR system for the USAPWR initiated automatically or is it only manual?

MR. OGINO: This is Ogino. The RHR system, this is manual.

CHAIRMAN STETKAR: Strictly manual?

MR. OGINO: Yes.

CHAIRMAN STETKAR: Okay. Are the RHR

suction valves from the point system, I've forgotten the valve numbers, but the number one and number two valves, I think. Are they normally de-energized during plant power operation? Is power removed from those valves?

MR. OGINO: Yes most is.

CHAIRMAN STETKAR: So to initiate, to start RHR the operator must restore power to the valves.

MR. OGINO: Yes.

CHAIRMAN STETKAR: And then manually open the valves?

MR. OGINO: Yes.

CHAIRMAN STETKAR: Okay. Does power restore to those valves, where is the power restored to the valves, at the electrical switch gear?

MR. OGINO: Yes.

CHAIRMAN STETKAR: So you have to go to the switch gear and close the motor contractor?

MR. OGINO: Yes.

CHAIRMAN STETKAR: I know that there is a 400, I think it's a 400 psig interloft on those suction valves that prevent the valves from opening. Are there any automatic signals to close those valves?

MR. OGINO: No, there is automatic. The

codes for this we use RHR system, piping is used.

CHAIRMAN STETKAR: Yes, I understand. I just wanted to make sure that there wasn't any, any automatic signal. Let me, you are going to have to bear with me a moment because I have questions scattered here and I don't have my notes organized very well. Are the RHR suction valves from the loop, are they powered from safety buses?

MR. OGINO: Yes, safety buses.

CHAIRMAN STETKAR: Okay. So they can be supplied, can they be supplied from the alternate AC power supply? Okay. All right. As I said you'll have to bear -- we're okay with time, so you'll have to bear with me as I read through my notes here. Okay. Now, I was going to ask you about LTOP earlier when we were talking overpressure protection. I wanted to ask you more about it in the context of the RHR system because it is the RHR suction valves. There are analyses that I read about that says that the LTOP system provides adequate protection against overpressure events during shutdown conditions. It is my understanding that those analyses are based on a configuration with two RHR trains connected to the reactor coolant system.

MR. OGINO: Yes.

CHAIRMAN STETKAR: And two safety injection trains available. And the analyses, one of the potential overpressure conditions is spurious actuation of safety injections.

MR. OGINO: Yes.

CHAIRMAN STETKAR: I looked at the relief valve capacities are 1,320 gmp at an opening set point pressure of 470 psig.

MR. OGINO: Yes.

CHAIRMAN STETKAR: If I look at the safety injection pump head curves in Chapter 6, Figure 6.3-4, it seems that the safety injection pumps have a rated flow of 1,540 gpm at a nominal discharge pressure of 710 psig. That is 1,640 feet developed head. That at 900 psig they have a flow of about 1,400 gpm. The point is that both of those flow rates are higher than the relief capacity of those suction relief valves. So my question is, how do the suction relief valves provide overpressure protection if the safety injection pumps are started spuriously when the pressurizer is water solid? Because it is not clear to me that the relief valves have adequate capacity to relief that safety injection flow at either 470 psig where they open or 900 psig, which is your nominal design pressure at those low temperatures.

MR. OGINO: Safety injection pump is based on the RCS pressure. RCS pressure is from condition is 400 psig. So, safety injection pump cannot design to the RCS. So it seems relief steam is less than safety injection pump head curve.

CHAIRMAN STETKAR: I guess I didn't understand your answer because if I look at the safety injection pump head curve as published in Figure 6.3-4 of the DCD, it shows a flow, a minimum flow of 1,540 gpm at a developed head of 1,640 feet which is equivalent to 710 psig. So that pump can produce 1,540 gpm at 700 pounds. At a lower pressure, it will produce more flow with the pump head curve actually stops at 1,540 gpm. So at 470 pounds that pump can actually produce more flow. I don't know how much more flow. Am I reading this curve wrong?

MEMBER BLEY: No, you're reading it right. What happens down here, you could be getting into run out.

CHAIRMAN STETKAR: You could be getting into run out conditions.

MEMBER BLEY: You could be, yes.

CHAIRMAN STETKAR: But the point is the pump can deliver that amount of flow, that 700 pounds. And so therefore if the relief valve cannot relieve

the amount of low delivered by the pump, pressure will increase. And indeed pressure will try to increase until the pump is dead headed. So I don't --

MR. OGINO: Your concern --

CHAIRMAN STETKAR: My concern is if the reactor coolant system, the only reason we're really concerned about this is if the reactor coolant system is water solid. So I have no bubble in the pressurizer. I have a solid system. If I start as an analysis I think was done, if I have a spurious safety injection and I start both safety injection pumps. In fact I can back up and only use one safety injection pump and RHR training, if its easier. But if I start both safety injection pumps with the two suction relief valves, the know, the RHR line, they are available for pressure relief. It doesn't seem that the suction relief valves have adequate capacity to pass the flow, oil flow, from the safety injection pump and it would seem that pressure would increase. And indeed it would increase higher your nominal 900 pounds, which I believe is the design set point at that temperature.

MR. OGINO: The relief set point is 470 psig.

CHAIRMAN STETKAR: Yes.

MR. OGINO: Such condition safety injection pump the flow rate from the safety injection pump is decreased down lower than the design capacity.

CHAIRMAN STETKAR: Lower than the design. It must have a very, very strange pump head curve if that's the case because if I look at the pump head curve it would seem that as Dr. Bley mentioned, at some point, if I have no discharge pressure, I'm trying to just infinite volume, the pump will go into run out and indeed I won't get very much flow from it. But the pump head curves that are published in the DCD as long as they are reasonably continuous out beyond the point where they are cut off, would indicate that I would develop more flow at a lower discharge head. Now where the pump goes into run out, I don't know. But that maybe part of the answer.

MEMBER BLEY: Not something you generally count on.

CHAIRMAN STETKAR: It's not something I would generally count on, but again the way the pump head curves look, it would seem that at a 470 pound back pressure on the pump, I can deliver more than 1,540 gpm which is much more than 1,320 gpm which is the capacity of the relief valves, at 470 pounds. I'm out somewhere here on the head curve. It just didn't

run it out beyond those nominal conditions.

MR. OGINO: Safety condition pump back pressure high will decrease.

CHAIRMAN STETKAR: That's right.

MR. OGINO: So, --

CHAIRMAN STETKAR: In fact if I'm deadheading the pump, the pump is deadheaded at roughly 3,937 feet which I can't do the conversion but its roughly 2-1/3 so its about 1,500 or 1,600 psig.

MR. OGINO: We have --

CHAIRMAN STETKAR: So at that point it won't deliver any flow. That's well above the pressure that I'm interested in. So the pump can actually develop that pressure.

MR. OGINO: In the condition 4470 psi. So of that back pressure safety condition pump relate is near the same a if --

CHAIRMAN STETKAR: That's what I was looking for. And if you have, do you have an analysis that shows that?

MR. OGINO: Yes.

CHAIRMAN STETKAR: Okay. I would be interested to see that analysis because it wasn't clear from the information that's available in the DCD.

MR. OGINO: Describe in the technical report.

MEMBER BLEY: I'm sorry, what technical report?

CHAIRMAN STETKAR: I'm sorry could you speak up a little bit so we would have it on the record.

MR. WILSON: Back on slide 15 if you can just, in the first issue there under the item side you can see a reference to a report. That's the report?

MR. OGINO: Yes.

MEMBER BLEY: 09.

CHAIRMAN STETKAR: 016?

MR. OGINO: Yes.

CHAIRMAN STETKAR: Okay.

MEMBER BROWN: Do we have that report?

CHAIRMAN STETKAR: I think we do.

MEMBER BROWN: I don't recall seeing that in there.

CHAIRMAN STETKAR: I skimmed through it and I didn't recall seeing it either. I did see a statement, I think it was that report that said that the maximum pressure increase would be limited to, I've forgotten the number. I can't find it, 120 psi, which is less than their limit. But I couldn't

quickly find any actual, the basis for that analysis, those results. So I guess we'll take a look at that report and see or perhaps the staff.

MEMBER BLEY: Or maybe you can point us to exactly where in that report this would be.

MR. WILSON: The question you've asked is I think you asked it pretty clearly and we'll come back after the meeting, after we get the transcript and we will provide you an answer. If its in that report --

CHAIRMAN STETKAR: If its in that report, I would be interested to see how the hydrodynamics actually work out for it because there seem to be a fairly large discrepancy between the stated relief capacity and the SI pump available capacity.

MR. OGINO: Excuse me.

MR. WILSON: Yes.

MR. OGINO: This is described in Chapter 6 of MUAP-09016.

CHAIRMAN STETKAR: Chapter 6. Thank you. We'll take a look at that.

MEMBER BLEY: Yes that's exactly what we are looking for. Two relief valves operable, inadvertent too high up.

CHAIRMAN STETKAR: Yes, I had seen that

amount. I just, it wasn't clear to me how those conditions eventually led to a -- I was curious whether they were taking credit for other possible relief pads for example and what those relief pads might be.

MEMBER BLEY: They look like it.

CHAIRMAN STETKAR: Okay.

MEMBER BLEY: I just took a look at that. Maybe we could keep that as a question. You could point us to, because it kind of says its okay but it doesn't give us enough information to understand why its okay.

CHAIRMAN STETKAR: Okay, so let's keep that as an open item.

MEMBER BLEY: It says a pressure plot but it doesn't --

CHAIRMAN STETKAR: On why the pressure plot behaves the way it does. You will have to bear with me again so now I've lost all possible control over these pieces of paper here in front of me. Are we set on that one? Okay. There have been events, I used to be a shift supervisor at an operating nuclear plant back in a very long ago previous life. And we had a number of events when we were in cold shutdown on RHR cooling where because of either personnel

errors during maintenance, personnel errors during testing or in some cases spurious protection signals or even spurious electrical signals, we had inadvertent closure of the RHR suction valves. And in deed lost RHR cooling for some period of time until we could determine the cause for the valve going closed and get the valve reopened. There have been a number of other similar type events documented at least in U.S. operating history. The LTOP system does not provide any over protection for heat up if the RHR suction valves are closed. So the question is have you considered events that cause spurious closure of the RHR suction valves as part of your analysis which would of course then by itself cause a heat up because you've lost RHR cooling and could result in an overpressure condition? Number one, have you considered those events and number two, if you have what type, what kind of time frames are we looking at under conditions when the plant would normally be water solid, which could be fairly early during a shutdown period? What is the time frame before you reach an overpressure condition so the operators, before the operators can open those, reopen those valves? Do you understand what I'm asking? I may not be asking the question very well. The scenario would

be, have you considered spurious closure of the suction valve, reactor coolant system then starts to increase in temperature, pressure will start to increase and at what time do you reach the limiting pressure that determines the available time for the operators to reopen at least one of those suction pads to reopen the relief valve? Of course the limiting pressure will increase as temperature goes up a little bit but you look at a limiting, a hydraulic transient of spurious safety injection. You looked at limiting thermal transient of spurious startup of a reactor coolant pump with 50 degrees higher secondary side in that loop. I recognize, that's a very rapid, that particular transient is a very rapid transient, although it might be relatively rare in terms of probability of occurrence, spurious startup of loop under conditions where you have additional heat from the steam generator. What I am curious about is how you thought about other conditions that have been, that have occurred in the operating plants where do you have isolation of those suction lines that would also cause a slower heat up, but a heat up?

MR. OGINO: This is not -- first thing I just have, we have the open status. So after the valve open we removed the power.

CHAIRMAN STETKAR: Oh you removed the power after you open it?

MR. OGINO: Yes.

CHAIRMAN STETKAR: Ah.

MR. OGINO: So and after closed or RHR system, so how much time to reach pressure. So that kind of --

CHAIRMAN STETKAR: But what you said is very important to me is you do actively, after you open the RHR suction valves, you then remove power from them?

MR. OGINO: Yes.

CHAIRMAN STETKAR: Is that documented any where in the, either in the DCD or as a commitment to the combined license applicant to instill that in the procedure?

MEMBER RAY: It is in our technical specification John.

CHAIRMAN STETKAR: It doesn't make any difference. Or at least a commitment for the combined, the COL applicant in their operating procedures to ensure that feature, if its not in the text?

MEMBER RAY: It is very important.

CHAIRMAN STETKAR: It is.

MEMBER RAY: To confirm what you are saying.

MEMBER BLEY: What chapter?

CHAIRMAN STETKAR: 16. I couldn't, I actually didn't look for that. I read through some of the stuff in 16. I couldn't find it.

MEMBER RAY: It's overpressure protection. You can't let it go shut.

CHAIRMAN STETKAR: The question is, if indeed that's true, that particular configuration resolves basically my concerns about those spurious closures. The principal of how this can fall apart mechanically but I'll give you that. It's just operating experience has had a number of issues with the other spurious signals to close the valve or human errors that close the valve electrically. There have been enough of those to raise that concern. If the power is indeed removed from the valve, that's very, very important, but I'd like to make sure that there are either as Mr. Ray mentioned, that requirement is either specified in the technical specifications or if it is not, there is clear guidance to the COL applicant that is a feature that they must ensure was written into their RHR operating procedures because that is a critical feature. And that indeed feature

would protect against that type of thermal overpressure transient.

MR. OGINO: If that feature is distracting some responsive --

CHAIRMAN STETKAR: I found in the DCD the basic description that said the valves are normally, the power is normally removed during normal power operation. That seems rather clear. I didn't see anything in there about during RHR system operation that the power was also removed.

MR. OGINO: So maybe some other responsive.

MEMBER BLEY: That would be good to follow up in the tech spec I see the valve has to be confirmed open by an inspection every 12th hour. I didn't see anything about power.

CHAIRMAN STETKAR: I didn't look for power. I saw that. So I think you probably understand the question.

MEMBER BLEY: There are five association suction isolation valves that is locked open with operator power removed for each required RHR suction valve.

CHAIRMAN STETKAR: Thank you Dr. Bley.

MEMBER BLEY: That is SR 3.4.12.7.

CHAIRMAN STETKAR: SR 3.?

MEMBER BLEY: 4.12.7.

CHAIRMAN STETKAR: 3.4.12.7. That answers that question. Thank you.

MEMBER BLEY: I'm sorry. Where I found that, I'm not sure that is for open.

CHAIRMAN STETKAR: Well but I mean if you found that statement that says during RHR, it doesn't make any difference whether its for LTOP or another purpose, as long as it is in the tech specs. It is just a matter of if indeed, if its in the tech specs and its fairly clear. I didn't look particularly for that. One last question on RHR. And this has to do with mid loop operations. The, actually I have two questions on RHR. I lied. Let's talk about mid loop operations first. The RHR suction line comes off the hot leg at about 45 degrees below horizontal. So its --

MR. OGINO: 45.

CHAIRMAN STETKAR: Yes. Its off to the side about 45 degrees down. The point is its not from the bottom of the highway. There are statements in the DCD that says during and I think we are all aware of this that mid loop operations are conditioned where the, you are potentially vulnerable to drying air into

the RHR suction lines and all binding system. That's happened a number of times. I know that you have installed level indication that provides the operators alarms to do that. That level indication also closes the lower pressure letdown valve. Is that correct?

MR. OGINO: Pardon me?

CHAIRMAN STETKAR: Does the low pressure letdown valve from the RHR system receive an automatic signal to close from low level?

MR. OGINO: Yes.

CHAIRMAN STETKAR: Okay. So you remove that. The DCD and response to some of the staff RAIs mention the fact that you can gravity drain from the spent fuel pool into the reactor vessel through the RHR system.

MR. OGINO: Yes.

CHAIRMAN STETKAR: In case the RHR pumps are not available and you can make up to the spent fuel pool from the RWSP through refueling water makeup pumps. So indeed you can effectively pump the RWSP through the spent fuel pool and gravity drain into the reactor vessel. The, I believe the staff asked about that mechanism and in the response it was noted that gravity drain is available essentially as a core cooling mechanism.

MR. OGINO: Yes.

CHAIRMAN STETKAR: A couple of questions. When RHR is operating at mid loop. This reactor coolant system normally vented at that point so are you at atmospheric pressure in the reactor coolant system?

MR. OGINO: Ours is.

CHAIRMAN STETKAR: Okay. It was at our plant, I just wanted to make sure. Is the containment normally closed at that time?

MR. OGINO: Condiment?

CHAIRMAN STETKAR: Containment?

MR. OGINO: If I, if more full so I believe containment is closed.

CHAIRMAN STETKAR: It was at our plant too according to tech specs. I just didn't have a chance to follow the tech specs. Now here's the question. Suppose I lose suction for the RHR pumps and have air ingress into the RHR system because I have an inadvertent reduction in level. I can then align the RWSP through the makeup pump, through the spent fuel pool to gravity drain and effectively cool the core by now boiling core inventory through the vent path into the containment condensing the steam. The problem that I have in terms of long-term cooling

is that your containment spray RHR pumps are actually your long-term containment and core decay heat removal pumps. You eventually line those pumps up to cool the RWSP through the RHR heat exchangers. They also provide the containment spray function. How do you establish long term core cooling in this configuration if the RHR pumps are air bound?

MR. OGINO: After the accent, they are in the accent.

CHAIRMAN STETKAR: This is, remember we are starting from shutdown conditions that mid loop operation. I add air ingress into the pumps. So now I have air in the RHR system some place and in your DCD you mention the fact that well core cooling is supplied by gravity drain. That implies that I don't get the RHR pumps back. If I don't get the RHR pumps back, I have a problem with long term core cooling eventually. I don't know what the time window but its eventually I have a problem with both long term core cooling and containment heat removal.

MR. OGINO: We have contemplated for such concern. I believe that is described in Chapter 19 PRA, so I'm sorry, I don't know but I'll do --

CHAIRMAN STETKAR: Okay.

MR. OGINO: This is very complex

scenarios and so I cannot --

CHAIRMAN STETKAR: Okay. I guess we will put that one off until we review the PRA. Let me make a note. If I were there, you can see I followed everything until I started to think about how we eventually get heat removed if the RHR pumps aren't available. So, I guess we'll put that one off until we look at the PRA. By the way for your information, we on the ACRS for each of the design certifications write a separate letter. We've been tasked by the commission to write a separate letter that applies our findings related to long-term core cooling. So this, I mean and its not restricted to particular operating modes. So that's one of the reasons why I am asking about this a bit.

Last question on RHR that I have is that the test line valve from the discharge of the RHR system that goes to the RWSP.

MR. OGINO: Yes.

CHAIRMAN STETKAR: Okay, that's the valve that actually, when you establish RWSP cooling that's the valve that you open to establish RWSP cooling. Its also the full flow test line for the CSRHR pumps. How do you control that valve either electrically or administratively during normal RHR operation so that

you did not pump the reactor vessel inventory into the RWSP. In other words if I am on normal RHR operation, and I open that valve, I will drain the reactor coolant system down to the RHR suction line, at which point I will cavitate the pump and the fail the pump.

MR. OGINO: About from the suction line to the RWSP is normally closed and to be controlled by power.

CHAIRMAN STETKAR: Okay. So any time you need to open that valve you must also go and put power to it?

MR. OGINO: Right.

CHAIRMAN STETKAR: Good, thank you. That would apply also in accident conditions. If you need to use that line for RWSP cooling?

MR. OGINO: Yes.

CHAIRMAN STETKAR: Okay, thank you. Is that valve powered from Class 1E power supply?

MR. OGINO: Yes, Class 1E.

CHAIRMAN STETKAR: Okay. I will never remember all of this.

MEMBER BLEY: You can read the transcript.

CHAIRMAN STETKAR: No I can't. Okay, thank you. I think that's all I had on the RHR

system. As I said, that's why I wanted to wait until after the break because there were a number of questions.

MR. WILSON: Thank you.

CHAIRMAN STETKAR: And thank you for the answers.

MR. WILSON: We just have a couple more slides before we are done. 5.4.12 of the DCD deals with high point vents. The concept is reactor vessel head vent is used to enhance natural circulation to the reactor coolant of the reactor coolant by eliminating non-condensible gasses in the upper plenum reactor vessel. SDVs are used to cool the reactor core by feed and bleed operation when lost of steam generators occurs. The DVs are used to pressurize, depressurize the RCS and prevent both high pressure meltage action and temperature induced steam generation tube rupture. There is an open item on this that I'll just read here. SRP acceptance criteria for Section 5.4.12 requires development of procedures to remove non-condensible gasses from the steam generator U tubes and to operate the vent system. If it is not provided in the DCD, a COL information item should be provided for the COL applicant licensee to develop operating procedures and

fulfill this acceptance criteria. This response is in process. The plan is to put into the DCD. That concludes this item. As you saw in the SER there were only -- next slide. There are eleven open items. And there are a variety of items that may or may not have been incorporated in the DCD Revision 3 but that's the status at this time.

CHAIRMAN STETKAR: You still have 15 minutes and I have more questions. Any other members can chime in any time you want to. Let me come back to RHR because I really like the RHR system. The, I notice that two of the RHR trains have, they are operated flow control valves on the outlet on the RHR heat exchangers and bypass valves around the RHR heat exchangers and two trains do not. I read a little bit about that in the DCD. During normal plant cool down it seems that and the trains that have the control valves on them are Trains B and C in particular. A and D do not. They simply have normally closed motor operated gate valves and then there is a motor operated globe valve out finally in the discharge line. The question I had is during a normal plant cool down, is it necessary that I must have at least Train B or Train C available? For example if I only have Trains A and D available, not B and not C, can I

actually perform a controlled cool down?

MR. OGINO: In normal cool down we all trains to use.

CHAIRMAN STETKAR: I understand you try to have all four trains available. What I'm asking is suppose you only have A and D available that B and C are failed. Can you perform a controlled cool down?

MR. OGINO: Yes.

CHAIRMAN STETKAR: You can, okay.

MR. OGINO: Also we have motor operated globe valves in all, in each train so we can control.

CHAIRMAN STETKAR: You just throttle flow with that globe valve to control the coolant?

MR. OGINO: Yes.

CHAIRMAN STETKAR: Its not as easy but you can do it. Okay. I felt that was the answer to that. The discussion, there's a discussion of using in Section for reference, you may want to write this down, 5.4.7.2.3.4, 5.4.7.2.3.4 of the DCD regarding safe shutdown. And its kind of a general discussion but the purpose is to demonstrate that you can achieve cold shutdown conditions using only safety related equipment, I believe. That discussion says that the decay heat removal and following the cool down through the main steam relief safety and emergency feedwater

system is performed by the HRHS. Now, my question is if I'm relieving steam through the main steam safety valves --

MR. OGINO: Safety valves?

CHAIRMAN STETKAR: Well in the DCD, I'll read it specifically. The statement says the decay heat removal and cooling following cool down through main steam safety relief valve for emphasis safety and emergency feedwater system is performed by the RHRS. Now, the question that I had is does that parentheses safety mean the operation in the safety mode or is it, does it imply that the relief valve itself is a safety valve? Okay, besides I didn't look far enough out into the main steam system to see the qualification of the relief valves.

MR. OGINO: This means --

CHAIRMAN STETKAR: It means that's a safety related valve?

MR. OGINO: Yes.

CHAIRMAN STETKAR: Okay, thanks. Otherwise I couldn't see how you were getting cool down and depressurized RHR. I was hoping that was the answer. And that believe it or not is all of the questions that I have. Do any of the other members have any questions for MHI because next according to

the schedule, we're going to have Luminant come up and discuss Chapter 5 of the COL FSAR and then the staff after lunch will come up and give the presentations on the SERs for both the DCD and COL. So in terms of numbers this is our last shot at MHI. Charles.

MEMBER BROWN: Okay, two questions. One for my information because I am not familiar with this is the contingent spray and contingent spray systems typically fed as part of the removal systems. In other words in this system residual heat removal pumps feed both the containment spray and the residual heat removal system. Is that a common approach to doing business?

CHAIRMAN STETKAR: That is one way of doing it.

MEMBER BROWN: Okay. When I was looking going through the flow diagrams, I couldn't find out where the containment spray flow rates were. I was trying to look at the containment, if you add them both on, what's the design basis for the flow rates. I could find the design basis for residual heat was like 2,000, 2645 or 3,000 gpm. All the containment spray lines are listed in our four modes as zero. I don't have any idea what the flow rate is required for containment spray maintaining pressure. My only point

was if they are all on.

CHAIRMAN STETKAR: We'll read this at this system in Chapter 6 for the containment spray function and the RWSP cooling function. Its kind of a strange system because its RHR and overpressure relief functions are described in Chapter 5. Its containment spray function and in a sense long-term cooling function are described over in Chapter 6. I didn't look over in Chapter to see whether the spray flows are over there.

MEMBER BROWN: I found the residual heat removal system so.

CHAIRMAN STETKAR: In Chapter 5?

MEMBER BROWN: In Chapter 5, yes it was on the figure showing all of the four modes, shutdown, startup, normal operation and refueling and obviously there is no containment spray in any of those.

CHAIRMAN STETKAR: Keep that in mind. We'll raise it certainly Chapter 6 if its not documented there. But that's more of the Chapter 6 head of this.

MEMBER BROWN: Do you think I'm going to remember this that long?

CHAIRMAN STETKAR: If you write it down you will.

MEMBER BROWN: That's the next thing I have to remember to write it down.

CHAIRMAN STETKAR: You had two things.

MEMBER BROWN: You answered them both. One was it typical and the other one was the flow rate type issue.

MEMBER SHACK: I just had a question about the depressurization valves which you have which are motor operated valves and that would seem to indicate that they wouldn't be operable in a station blackout situation. Why did you pick a motor operated valve over say an air operated valve that could be powered off a battery? It would be available in essentially all scenarios.

CHAIRMAN STETKAR: These aren't particularly what they call the DV valve.

MEMBER SHACK: Saved me from the high pressure melt injection and the induced steam generator rupture.

MR. OGINO: You discussed DV.

MEMBER SHACK: DV?

MR. OGINO: DV.

CHAIRMAN STETKAR: The ones that blow down the containment. The one that go to the containment. The two normally closed series valves.

MEMBER SHACK: The ones that I don't really want to open unless I really need them.

CHAIRMAN STETKAR: But when you really need them you would really like to have them.

MEMBER SHACK: I'd really like to have them work and since they are motor operated, I believe that I'm, so I'm in a station blackout situation, which is one of the scenarios I might very well what to be able to blow these things down. I can't do it. So why not something that could be operated strictly off of battery.

CHAIRMAN STETKAR: It could be a DC motor operated valve. It doesn't have to be an air operated valve. But essentially something that requires DC rather than AC power.

MR. OGINO: I believe DV is powered from battery, I believe.

CHAIRMAN STETKAR: Check that because I think that the DCD says, it doesn't specifically say AC. It says Class 1E power but with alternate, I believe it says with alternate power backup or something like that.

MEMBER SHACK: I believe it sounds like.

CHAIRMAN STETKAR: It sounds like its AC. I mean it doesn't specifically say that it is AC. So

if you could confirm if they are DC operated that would be good information. But if you could confirm the specific power supplies for those valves, that's what we are interested in. And if they are AC, why are they not DC?

MEMBER RAY: Like Charlie I'll apologize for things that perhaps I should know but I'll ask anyway. Naturally circulate the steam generators and reactor vessel allow the plant to naturally circulate? Yes or no? I take a nodding head is yes.

MR. WILSON: Natural circulation.

MEMBER RAY: Natural circulation, yes.

MR. OGINO: Natural circulation to remove the heater.

MEMBER RAY: I'm sorry, I couldn't understand. It does naturally circulate, for example it would be a startup text to demonstrate that it would match or re-circulate. Is that right?

MR. OGINO: Yes we'll do that test, we will do.

MEMBER RAY: Okay. And again forgive but does a plant have a turbine driven feedwater pump, aux feedwater pump? In other words, do I rely on electricity to keep the secondary side of the steam generator?

MR. OGINO: With the pump, we have four images for the pump, two are turbine driven.

MEMBER RAY: Two are turbine driven?

MR. OGINO: Yes.

MEMBER RAY: All right. Well that's fine. So then you can sit and remove decay heat with a blackout. That's what I was trying to get at. Okay.

CHAIRMAN STETKAR: Any other questions from any other members? No? If not we finished with two minutes to spare. Thank you very, very much for a very good presentation and good discussion. And as I said go through the transcripts, we'll try to highlight some of the major open items and close out of the meeting. I'll ask you also to go through the transcripts to see if we miss anything in that summary because there is quite a bit of discussion that has transpired here this morning. And again thank you very, very much for a good presentation.

And at this time I guess we will have Luminant cover up and present the FSAR information for Comanche Peak and I believe if I'm not incorrect this is the first time we've actually heard from you folks. So welcome to the jungle. And other than Dr. Shack its certainly the first time that the rest of us have

heard from you.

MEMBER SHACK: Not quite that long.

CHAIRMAN STETKAR: Not quite that long?

MEMBER SHACK: It just seems that way. It's been a little less than four years for me and it still seems that way.

MEMBER BLEY: Charlie just for a point. RHR is 3000 gallons design for.

MEMBER BROWN: No that's, to the spray system? 6.2.2.2.1, pages 82 PDF, page 82.

MEMBER BLEY: Oh okay.

CHAIRMAN STETKAR: We'll get back to all of that. We will revisit this system when we get there.

MEMBER BROWN: 6.2.2.81. I know where we are. I was just going there myself since you all illuminated that.

CHAIRMAN STETKAR: Are you folks ready? Welcome.

MR. WOODLAN: Good morning. I appreciate that you scheduled us before lunch instead of after lunch like the original schedule. As someone pointed out, Luminant is pleased to be here. It's our first time in over 20 years to be able to address the ACRS for Comanche Peak units there and four. We've reached

this point in the review process. This is our first visit for this review. Again I appreciate getting maybe one of the less challenging COLA chapters. Before we leave the front side, some of you may not have seen this before. This is a rendering of what the site will look like for three and four. If you look in the middle there, those two domes are Units 1 and 2, which are the current operating units. In the upper left is where 3 and 4 are located and you can see the flumes from the towers. And if you look right in the upper right way in the back, that's Comanche Peak itself. It's just kind of a little plateau there in the background.

My presentation will give a little bit of an introduction and then we talk section by section, not subsection by subsection. We'll take a look at what the FSAR has in it in the way of a summary. We'll talk a little bit about what the SER has in it with respect to each one of those sections. And then we'll summarize the presentation. Next slide.

I guess I didn't introduce myself. I am Don Woodlan. I'm the licensing manager for Comanche Peak Units 3 and 4 of the, we call it New Build Project. This chapter, Chapter 5 as is much of the COLA when you review it, you will find its essentially

incorporated by reference. Being the R-COLA and working essentially in parallel with the DCD and the DCD review are really probably three to six months behind. But I'm very close to them. We've been able to work very closely with Mitsubishi. And we've been able to provide our ideas and concepts as the DCD and the design work was being done. That's why the next bullet says there are no departures. We've been able to identify areas where we thought we might want to take a departure when every time we've identified one of those, we've approached Mitsubishi. Mitsubishi has taken into consideration what we've said and we came up with a resolution that we were both happy with. So we didn't need to take a departure. We are hoping we make it all the way through the process that way but that's where we are today.

Looking at the SER, kind of in summary there is one plant specific open item, one generic or broad open item if you will and then several confirmatory items and I'll talk about them in a little more detail in the future slides. COLA Revision 2, which is the key to some of the discussions here is scheduled to come out in June of this year and it will close a lot of the items that are listed in the SER. And it doesn't really relate

to what we are doing here but thought you might like to know there are no contingents pending in front of ASLB relative to Chapter 5. Actually we don't have any contingents at all right now with the ASLB but as you know that can change with time.

Okay, let's start with Section 5.1, the summary description. In the FSAR, sections entirely incorporated by reference, again with no departures or supplemental information provided. And there were no COL Information Items in the DCD for this section. In the NRC summary, we do have the one generic SER open item which is essentially that we must adopt as certified DCD once the certification is complete. So that will be there until all the way to just about the end. There are no Confirmatory Items and there are no Proposed License Conditions for 5.1.

5.2, the integrity of the reactor coolant pressure valve. The FSAR summary, again its primarily incorporated by reference with no departures. There are ten COL Information Items which are addressed in the COLA or the COL.

Looking at the SER summary from the NRC, there was one identified open item and I'll address there. There are three Confirmatory Items and there are two Proposed License Conditions. Here is the open

item. It has to relate with the EPR Water Chemistry Guidelines. The COL Information Item required that we identify which version of the Chemistry Guidelines we were going to use. We messed up when we wrote the COLA. We weren't very specific about that. Once we realized the problem, we talked to the NRC and this is the response we provided the NRC that we intend to use the Water Chemistry Program that's based on the latest effective version of the Guidelines. And I believe the NRC has taken a look at that and this may shifting from an open item to a confirmatory item once they complete their review.

CHAIRMAN STETKAR: Is that latest effective revision at the time of COL issuance or the time of fuel load or?

MR. WOODLAN: Ongoing.

CHAIRMAN STETKAR: Ongoing, okay.

MEMBER BLEY: Are you going to get the steam generator chemistry later on?

MR. WOODLAN: No. It's not in my slides but if you have a question.

MEMBER BLEY: Just a question. Have you decided on the water chemistry through your steam generators and is it something that really needs to be matched up with the Japanese experience with these

generators?

MR. WOODLAN: I believe we have decided what the water chemistry is and we're incorporating both our own operating experience, having over 20 years of experience on our plants, as well as the Japanese. This is one of the issues that was, initially might be a departure. The Japanese were proposing more of a chemistry -- what was the term? Was it phosphate and sulfate type water controls as used in Japan? I may not be getting that quite right. But we used the volatile chemical controls on one or two and found with experience that was the best way to go. And that was one of the areas we talked with Mitsubishi about and discussed the pros and cons and in fact came to agreement on the approach that would be used. So I know we have agreed on what we are going to do.

MEMBER BLEY: I was just curious because they were telling us of their very good experience and I haven't read about their experience before and it would be a shame not to keep with whatever led to that experience if it is as good as they say.

MR. WOODLAN: Yes. And like I say, I think we've worked with them and combined both of our experience, theirs and ours, to come up with the plan

that we are using.

MEMBER BLEY: I'm just curious as to why it doesn't come up here in Chapter 5, since the primary water chemistry comes up here?

CHAIRMAN STETKAR: It's tradition. It's either, I can't remember whether its Chapter 9 or Chapter 10.

MR. WOODLAN: It's probably Chapter 10.

CHAIRMAN STETKAR: Yes, it's either 9 or 10. I can't remember, one of those two.

MEMBER BLEY: So we'll revisit this.

MEMBER SHACK: 1035.

CHAIRMAN STETKAR: 1035.

MR. WOODLAN: Although the answer is a lot like the answer on the primary system. It puts out some very good guidance. I know we were a 22 a lot as we tried to solve the problems we were having on one of the steam generators.

MEMBER BLEY: I understand that. But the question, if they had such good experience compared to all other steam generators, maybe there is something unique here that wouldn't be in the standard.

CHAIRMAN STETKAR: Yes, is there anything different from what they use --

MEMBER BLEY: For their particular

generators.

CHAIRMAN STETKAR: Yes, compared to the Guidelines recommend on the secondary slide.

MR. WOODLAN: Next slide. Now I threw in several slides here talking about license conditions that probably don't relate as much as a lot of the other material directly to what ACRS is interested in but is an area that we're still dealing with the NRC and they are discussed in the safety evaluation reports. In some cases, as in this case, the NRC has proposed a license condition in the SER. Luminant is still working with the NRC to resolve these. In some cases as in this case, we feel that a commitment by Luminant is more appropriate than a license condition. And some of the other ones we are agreeing with the license condition but the words are not finalized yet and that will be negotiated some time before this goes to the commissioners with the COL will come up with words that we both agree with, just like we did on one and two.

Next Section 5.2 integrity of the RCPB. This is the next license condition. This one had to do with the preservice testing program. There are as you may be familiar with, there's a lot of operational programs that are required that we establish. We have

a table in the FSAR, 13.4-201 which lists almost all of these operational programs and in particular it identifies which of those programs need to be implemented by a license condition and in general that requirement comes out of the regulatory guidance that we use to write the COLA from. And what we're proposing the SER proposed a license condition specifically for preservice testing program. What we are proposing and this is consistent with the Model COL that the staff has developed is a single license condition that says that all the operational programs will be implemented consistent with this table 13.4-201. So it is a different way of solving this same program.

CHAIRMAN STETKAR: Different bookkeeping?

MR. WOODLAN: Yes. Next slide 5.3 reactor vessel. The FSAR summary again primarily incorporated by reference with no departures, the 05 COL information items, all of which were addressed in this COL application. The SER summary shows no open items, two confirmatory items and two proposed license conditions.

The first license condition which was number 5.3 has to do with the material surveillance control program and this is the same category as the

other one. The NRC proposed a separate license condition for this. We filled this envelope to buy the bounding license condition for Table 3.4.201. Next slide.

License condition 5.4, this is the pressurized thermal shock evaluation. This is one where we agreed with the staff and we accepted the need for a license condition in this area. The wording that we had come up with and I believe the staff based this primarily on their proposed wording in an RAI and in Rev 1 of the COLA. In the response to that issue, we proposed alternate wording. Again, we don't disagree at all with the need for the license condition. We just need to resolve the proper wording to go into the license.

5.4, component and subsystem design. The FSAR summary, again, incorporated by reference with no departures or supplements and there were no COL information items in this section. The SER showed no open items, one confirmatory item and no proposed licensed conditions.

In summary, the COL information items that were included in the DCD have all been addressed in the COLA. We have no departures and we only provided supplemental information as needed to respond to the

COL information items. We have one generic and plant specific open item and we have five confirmatory items.

In general, well no, not in general, but across the board all the confirmatory items have been responded to by Luminant and we have provided where we felt was the information needed to resolve those items including markups of how we intend to change the FSAR. There are still confirmatory because they haven't revised the FSAR yet but that should occur in June and we expect that, since the NRC has already seen the markups that Revision 2 should close out those confirmatory items. We do have the five proposed license conditions and we are addressing those with the staff.

I guess I don't need to read all of this, the acronyms.

CHAIRMAN STETKAR: Thank you. Any questions from any of the members? No. As you said, its an easy one. It's a big struggle. Thank you very, very much for the presentation. That was very efficient.

MR. WOODLAN: Is this the kind, if its okay to ask, is this the kind of information you are looking for from our presentation?

CHAIRMAN STETKAR: Well as you heard with our discussion with MHI, if we identify any specific issues, we aren't shy about asking. Certainly we would, in this particular case, there were no deviations or exceptions. Any place where you do in the future, if there are any places where you do take an exception.

MR. WOODLAN: Departure.

CHAIRMAN STETKAR: Departure. We certainly are interested in hearing about it. Any place that you in the future if there are any places where you do take an exception.

MR. WOODLAN: Department is --

CHAIRMAN STETKAR: A departure.

MR. WOODLAN: Yes, okay.

CHAIRMAN STETKAR: We are certainly interested in hearing about details about that rationale and so forth.

MR. WOODLAN: Okay.

MEMBER BLEY: Yes, we would like details when its plant specific things.

CHAIRMAN STETKAR: And of course anything does come up plant specific, Chapter 2, some of the Chapter 8 stuff, you will be plant specific, those types of things.

MR. WOODLAN: Thank you.

CHAIRMAN STETKAR: Thank you. In the interest of time and I'll ask the staff, we originally scheduled to break for lunch at 12:15. Do you want to start with your presentation. Can we go for about 45 minutes to maybe an hour.

MR. HAMZEHEE: Give me one minute to make sure tech staff is --

CHAIRMAN STETKAR: Okay. That's what I wanted to ask you. If you have the people here I'd just as soon get started. It's a little early to break for lunch but we can also do that.

MS. BERRRIOS: Do you mind if we do COL? That would be shorter.

CHAIRMAN STETKAR: No, I don't care. Let's, if you can do, if you have the people here for COL let's do the COL and then we can break for lunch and reconvene then. That's fine. No problem at all. Nice thing about the subcommittee meetings is we're not nearly as constrained to specific, hitting specific time marks as we are in full committee briefings.

CHAIRMAN STETKAR: Okay. Thank you for accommodating the schedule in real time. I know sometimes that's a bit difficult but I'm sure, we have

some constraints. There are some people who need to leave a little bit early and I'm sure you all would like to start your long weekend as soon as possible. So with that, let's hear from the staff on the Comanche Peak COL SER and then we'll break for lunch after that. Jeff, you can wear Steven's hat.

MR. MONARQUE: Good morning. Thank you for the opportunity or give me the opportunity to present our first chapter, staff's first chapter of the ACRS on Comanche Peak COL application. Our review was conducted to thread one of this COL. My first presentation I'll do an overview of the COL followed by Paul Kallan and then Eduardo Sastre and that's on page two. Next slide please.

CHAIRMAN STETKAR: And Jeff just for our recorder, because he doesn't know who you are.

MR. MONARQUE: My name's Steve Monarque and this is my first presentation related to the article.

CHAIRMAN STETKAR: I'm sorry Steve.

MR. MONARQUE: That's okay. I'm the lead project manager for the Comanche Peak R COLA review.

CHAIRMAN STETKAR: Thanks.

MR. MONARQUE: We'll go ahead to slide three. Because this is the first time we presented an

article at Chapter ACRS, I want to give you a presentation as to what has been accomplished to date. We received the COL application in September 2008. We published a schedule in March of 2009. We completed a phase one milestone. Phase one milestone is completion of safety evaluation, preliminary safety evaluation and issuance of RAIs. That was completed in October 2009. In November of that same year we received revision 1 to the article. In the March of 2011 we had to change to our public schedule but we extend the schedule by approximately 18 months. And as Luminant alluded to earlier in June at the end of June of this year, we will have received revision 2 of the article. Next slide please.

What I present here, is our public milestone. Public milestones as published on an our NRC website of the COLs reduced schedule phases 1 through 6 and phase 1 has been accomplished to date. We are in the middle of phase 2. And with that, I'll go ahead, if there's no further questions and this is a one time presentation, I wanted to give you.

MEMBER BLEY: By that schedule by July of next year we will have made a pass through everything?

MR. MONARQUE: Correct, yes. And that includes receipt of the letter and full committee

meetings as well. Correct. And with that I'll turn it over to Paul Kallan who will introduce the technical review staff.

MR. KALLAN: I just on this slide it is basically its just mentioning all the people who work on the technical staff who worked on Chapter 5, the COL portion of it. Just a quick overview of the COL review. What we did was we put the SRP section as well as the number of questions and the amount of open items and this one open item in this, on the COL. And overall there was a total of 17 questions and one open item. And now I will turn it over to Eduardo Sastre.

MR. SASTRE: Good morning everyone. My name is Eduardo Sastre. I was in charge of the chemical material part of the Section 5.2.3. As Luminant explained there's an open item on the COL information item on which version of the water chemistry guidelines they are going to use. They didn't provide a specific prohibition. The issue was that they didn't address it. And after having a conversation with them on the ROI they discussed that they were going to use, it was Region 6 but as the chemical control problem keeps being updated through the years we asked for them to provide something in the SAR that is stated that the program will be

updated with the latest of the chemistry guidelines. I also heard the concern from the secondary side water chemistry guideline. Right now I'm not prepared to those questions but we will take that concern and when I present Chapter 10 I will discuss those concerns.

MEMBER BLEY: Just as a heads I'm probably going to ask you something about the experience Mitsubishi has told about when their generators and how this water chemistry guidelines --

MR. SASTRE: Yes we had a few ROIs about those concerns because --

MEMBER BLEY: Let's wait on that.

MR. SASTRE: At the beginning they were going to use the water chemistry guidelines but now they are going to use it with some experience. I will discuss it in more detail then.

MR. KALLAN: AT the end it's a list of acronyms.

CHAIRMAN STETKAR: Did we have any follow up questions? Do any of the members on this side of the table have any following up questions? Now I'll ask on this side. Do any of the members on this side of the table have any follow up questions to the staff on COL?

MEMBER REMPE: No on the stuff that was

presented.

MEMBER SHACK: We're on Chapter 10. We're moving ahead.

CHAIRMAN STETKAR: You can share the Chapter 10 meeting if you want to. Well that was quick. Thank you very much. And again, thanks for a accommodating the schedule. At least we can check off that box. With that, I am going to recess for lunch and let's reconvene at 12:45. I'll give you a full hour for lunch and then we'll hear the staff presentation on the DCD SER. So, we will recess until 12:45.

(Whereupon the foregoing matter went off the record at 11:42 a.m. and resumed at 12:45 p.m.)

CHAIRMAN STETKAR: We're now back in session if anybody can hear anything. And we'll hear from the staff on the SER for the design certification Chapter 5. And Jeff, I don't know if you want to say something or will just have your staff --

MR. CIOCCO: I think we're ready to go.

CHAIRMAN STETKAR: Good.

MR. KALLAN: Hi this is Paul Kallan. I am the Chapter PM for Chapter 5. We can go on to slide two. This is the technical staff, John Wu and next to him is John Budzynski, Steve Downey and John

Honcharik and they are presenters for today. This is the overall, slide three is the overall stock that actually worked on Chapter 3, quite a number of people that worked on it. Slides three and four are basically the list of staff that worked on it.

Slide five is an overview, slide five is an overview of Chapter 5 and just like the COL we had the SRP section with a number of questions and a number of RAIs.

The next three slides its basically, we went section by section and we just gave you a list of the section and questions was asked for each section as well as the open items.

Slide eight is basically there is a total of 134 questions with eleven open items.

And now I'll turn it over to John Wu for the compliance for the optical COL cases.

MR. WU: Yes. My name is John Wu from NRO division, branch one. Today I would like to cover Section 5.2.1.2, a COL case. Label one open item, the open item is related to RAI 5.2.1.2-7. Those as you will see here also have RAI that is a, I think UPM code, ERI number 575, question 4422, okay. And as you heard early this morning from Mitsubishi about this open item, your response to the staff, response to

staff RAI. The applicant aids the COL case N-782 to DCD Section 5.2.1.2, Table 5.2.1-2. Full application to USAPWR of 50.55(a) and the ASME codes 1140(a)(2). The open item, we look at 10 CFR 50.55(a) before which is allowed application of old ASME Code COL cases and listed in NRC Regulatory Guide 1.84, Revision 35. Without the prior NRC approval, we have several code cases. However, the code cases to DCD. DCD in Table 5.2.1-2 is not listed in this reg guide for acceptance. Therefore, this is, the HSA we're going to, we are code case N-782 in the table that I just mentioned. Therefore the applicant was requested to provide justification for increasing the code case in DCD in accordance regulation 10 CFR 50.55(a). We received applicant supplement response in letter of April 26, 2011 stating that the use of the code case N-782 facilitates the use of the ASME Code, additional addenda, including USAPWR design. Therefore it would provide an acceptable level quality and safety. This is consistent with our regulation in 10 CFR 50.55 item (a)(3)(I) and therefore acceptable. So after we receive it was open item, but after we receipt this supplemental response and the issue is resolved and the RAI is closed. Thank you.

MR. KALLAN: Okay. I'll turn it over to

Steven Downey.

MR. DOWNEY: Good afternoon everybody. My name is Steven Downey. I'm a materials engineer with the office of new reactors, division of engineering, component integrity performance and technical branch. And I'm the technical reviewer for Section 5.3.2, Charpy Upper-Shelf Energy and I'll be presenting the staff inspected on pressure temperature limits. As stated in Mitsubishi's presentation, they've decided to address the requirements of 10 CFR Part 50, Appendix G related to pressure and temperature limits by submitting a generic pressure and temperature limits report that will be applicable to al plants that reference the USAPWR design. This report follows the guidelines of generic letter 9603 and which provides seven technical criteria to be addressed in order to submit the pressure temperature limits and a complete methodology for their development. The applicant also provided a COL information item to address the submittal of plant specific P-T limits by future COL applicants. And that is COL information item 5.3.1. They have also stated in Mitsubishi's presentation the USAPWR pressure and temperature limits report has been submitted. However, the staff's review of this report is not yet complete. As

such all open items identified in this SER section are related to the staff's review of the pressure and temperature limits report. And there are two open items to date. The first open item tracks the ongoing review of the pressure and temperature limits report and will be closed upon approval of this report. And the second open item is related to unresolved RAI in which the staff asked the applicant to clarify how the analyses performed to develop the P-T limits have considered the entire reactor vessel. That concludes my presentation. Are there any questions? There being none I yield floor to John Honcharik.

MR. HONCHARIK: Hi. My name is John Honcharik and I also work in the component integrity branch. I am a materials engineer and this afternoon I'll be discussing the reactor coolant pump flywheel. USAPWR FSAR Section 5.4.1 basically describes the materials used which basically is the SA 533, which now is still currently used in operating plants, along with the fabrication and inspection of flywheel to ensure its integrity following the guidance of Reg Guide 1.14 that flywheel has outlined in NUREG-0800. This ensures that the flywheel design minimizes the possibility of generating high energy missiles consistent with the guidelines in the reg guide 1.1.4.

MHI also provided an analysis in accordance with the reg guide and SRP Section 5.4.1.1 in order to meet the requirements of the GEC report. The report evaluated the critical speeds for various failure modes including ductile and nonductile fracture. A fatigue crack growth analysis also performed to determine the crack growth rate of an initial size presumed to be missed by inspection. There is one open item as indicated on this slide. This is related to the MHI, providing the critical crack size used to fracture the flywheel so it could be compared to the fatigue crack growth in the analysis. Also, to confirm that inspection capabilities we can detect the initial flaw size using analysis. And as we heard this morning, MHI is addressing this open item.

CHAIRMAN STETKAR: Did you review the probabilistic fracture mechanics analysis that was done on the flywheel. I know the staff has found that analysis provides adequate basis for their proposed 20 year flywheel inspection frequency. Did you review that analysis?

MR. HONCHARIK: Yes I reviewed it.

CHAIRMAN STETKAR: Could you explain the basis for their probability distribution for overspeeds in excess of 1500 rpm? Did you ask them

about that? If you heard the questioning this morning, the 1500 rpm seems to be a nominal 25 percent overspeed that seems to be somehow justified by perhaps leak before break considerations on at least LOCA scenarios. I was curious, I didn't see any record of RAIs related to their assessment of probabilities that the overspeed might be higher or their selection of a particular probability distribution is a function of overspeed.

MR. HONCHARIK: I guess, trying to remember, I think because you were talking about the leak before break scenario and I think what they did was they assumed that wouldn't be over that designed overspeed and that kind of is consistent with other, I guess, others that we used similar methodology and in addition to that, they also do the critical speeds for the pump and those critical speeds are like 3500 rpm which is way above anything I guess considered. So I think it has been past presidents that would be acceptable.

CHAIRMAN STETKAR: Okay. So essentially if I can understand what you are saying you feel that there's quite a bit of margin above that 1500 rpm even if the different probability distribution were used, you feel comfortable that there is still adequate

margin preserve. Okay.

MEMBER SHACK: You saw the critical flaw sides this morning at 1500 was three inches so that a --

MR. HONCHARIK: Yes, that's another --

MEMBER SHACK: Pretty large crack.

MEMBER SHACK: Yes. Well I think they say its greater than three inches. I'm not sure how, I think they are still working on that. I'm not sure I might have misunderstood but I can't remember MHI said, I heard something like ten, but I don't know. It sounds like it is greater than three inches.

MEMBER SHACK: Greater than three inches was big enough. Okay, thanks. I just had another truly tacky question on that thing. I looked at that analysis and it got the embedded crack and the infinite space as one model. I can sort of see that's okay. That's a conservative estimate of a finite crack in a finite body. It wasn't so clear to me that the surface crack done as a crack and a half space was conservative although they seem to -- has anybody looked, nobody made any comparisons with finite element calculations to show that or something like that. Has that been done before for this kind of analysis so it is kind of accepted that you can use

those approximations for the fracture mechanic solutions?

MR. HONCHARIK: Yes, typically because like I said there are other applications that have done that and they used somewhat similar methodology. I think even discussion this morning about some of the distributions. They kind of talk about a lot of different things but in the end they kind of assume a larger crack size anyway. So, in actuality they kind of went a little more conservative than they could have based on what they were presenting in the beginning. It did seem that they were conservative in some of the past applications that have used that methodology.

MEMBER SHACK: Just for my own information the most operating plants now work with this like ten or 20 year interval rather than the Reg Guide interval?

MR. HONCHARIK: Yes basically every one uses at least ten and basically almost all the Westinghouse and all the CE plants use 20.

MEMBER SHACK: Somebody has been through this before.

MR. HONCHARIK: Yes, they have. And this nothing really.

CHAIRMAN STETKAR: I had one other thing on reactor coolant pump overspeed. This is the danger of being a little bit ahead of schedule. In the DCD and its essentially the same words are repeated in the SER. This is, an overspeed condition this is referring to reactor coolant pump overspeed now, an overspeed condition could occur due to an electrical fault requiring immediate trip of the generator. The turbine control system and the turbine intercept valves, however, limit the overspeed to less than 120 percent. As additional backup, the turbine protection system has a mechanical overspeed protection trip usually set at about 110 percent of rotating speed. My question was what does main turbine overspeed protection control have to do with reactor coolant pump overspeed after a main generator trip? It seems totally irrelevant. Absolutely totally irrelevant because this plant has a generator breaker such that if you have a main generator trip the generator output breaker opens, the reactor coolant buses remain powered from offsite power and it would seem that those pumps would remain rotating at essentially the same speed that they were rotating before. Now, that statement that I read was a direct quote out of Section 5.4.1.4.7 of the DCD and I don't have the

direct quote from Section 5.1. -- I'm sorry 5.4.1.2.4 of the SER but if the words are not repeated verbatim they are essentially repeated. So, and you use that as one more justification about the reactor coolant pump flywheel overspeed conditions. So was really curious about what the technical basis for that justification was and whether you really questioned what main turbine overspeed protection has to do with reactor coolant pump overspeed after main generator trip?

MR. HONCHARIK: Okay. I guess I'm a little hesitant because I think that might have been in a different section than I had to review.

CHAIRMAN STETKAR: Okay.

MR. HONCHARIK: So I think that might be for other, so I think I might have to get back to you.

CHAIRMAN STETKAR: Okay. Why don't you do that because it was something I really, really tried to think about how they were relevant and I will grant you it was late at night that I honestly couldn't draw the link there and its clear that the paragraph talks about main turbine overspeed protection. That its not talking about anything else and it seems like after the generator output breaker opens the two issues are basically decoupled from one

another.

MR. HONCHARIK: Right.

CHAIRMAN STETKAR: So, yes, if you could, the relevant section of the SER is 5.4.1.2.4 of the SER.

MR. HONCHARIK: Okay.

CHAIRMAN STETKAR: Thanks.

MR. KALLAN: Okay, I'll turn it over to John Budzynski.

MR. BUDZYNSKI: My name is John Budzynski. I am a reactor system engineer and I did several sections in Chapter 5 and reactor coolant pump Section 5.4.1.2. I reviewed that. The reactor coolant pump is a vertical shaft, single stage mixed flow with a diffuser. There are two events that I reviewed in here. You also see a water injection and also component cooling board. In each one of these events I have an open item.

CHAIRMAN STETKAR: I'm sorry. Let me, just for clarification, is your interpretation of loss of cooling water the same as our interpretation of loss of cooling water as we related this morning that its loss of all component cooling water supplies to the reactor coolant pump.

MR. BUDZYNSKI: That was my assumption.

CHAIRMAN STETKAR: Not individual coolers.

MR. BUDZYNSKI: Right, that was assumption. That's why I had the open item here because I thought if you lose it or you lose it to every or just to a certain individual component. From open item 5.4.1.2-1 respective loss of COL water injection. Provided response is during a main control room alarm I couldn't find that in there. And how long can the RCP operate in this condition? I didn't find that in there either. And for the loss of component cooling water, open item 5.4.1.2-2 and wanted to know the loss of the CCW including loss of what we were just talking about. And what is the limiting factor? Overheating of the pump or the seal? That's what I got out of the SER. I was a bit surprised when I heard NHI's response this morning they were somehow interpreting the individual cooling lines or something.

CHAIRMAN STETKAR: Right. I think we're pretty clear on things.

MR. BUDZYNSKI: Any questions? Next slide. Residual heat removal Section 5.4.7, system design. This is a similar to most current PWR designs except that it has four independent trains. Each

train has the capacity of, 50 percent capacity of heat removal used during normal startup, shutdown or refueling operations. If needed, it can maintain the refueling water storage temperature under 120 degrees. During normal shutdown operation, it is placed into operation approximately around 400 psi and 350 degree Fahrenheit. It was evaluated against NRC Bulletin 88-04, NRC Generic Letter 89-04 and branch technical position 5-4. We also evaluated against gas accumulation, ISG DC/COL ISG-019. And open item contains to the gas accumulation. And we request that they provide additional information that supports the RH design complies with ISG-019 with respect to potential air ingestion and/or vortexing during refueling operations. In the 019 they identified three guidances. One is that the identifying, that they want the applicant to then find the gas accumulation locations and the gas intrusion mechanisms. They also want to confirm that the pmids and the isometric drawings are to the as built condition of the plant and that's a high tech issue. And the third thing would be surveillance and vending procedures. And so we are waiting for a reply to that open item.

CHAIRMAN STETKAR: Good not surprising

there's several questions on RHR. The first question is that in Section 5.2.2.4 of the SER there is quite a long discussion about provisions to enable to low temperature overpressure protection function of the RHR suction relief valves and without quoting verbatim long paragraphs there's the discussion of RAIs and responses from the applicant. It finally concludes that the RHR system is automatically actuated below the enabling temperature and that, this is a quote, the RHR and LTOP systems cannot be manually activated by the operator and those statements are apparently used as a basis for your conclusion that indeed enabling of the low temperature over pressure protection systems is adequate for the plant. From what I read in DCD and from what MHI told us this morning, those statements are not correct. Its not automatically activated and in fact it can only be aligned manually and not only, only aligned manually but the operators have to go out in the plant and reconnect the electrical power to the valves before they can open the valves. So this is not something that happens in any way shape or form automatic so I was curious.

MR. BUDZYNSKI: I agree with you.

CHAIRMAN STETKAR: Okay. So why does it

say in the SER that the thing works this way?

MR. BUDZYNSKI: I would have to go back and review that section. I believe what was meant is that when you get the load 400 psi and 350 degrees, you can now enable it. It allows you to enable the system below that section. But the system is not enabled. Okay? It has to be done manually by the operator and by the field operators in the plant.

CHAIRMAN STETKAR: Its certainly what the SER says John.

MR. BUDZYNSKI: Okay. I will have to go back.

CHAIRMAN STETKAR: I'll read you the -- "below the enable temperature the CS/RHR pump hot leg isolation valves RHR RHS MOV", I won't read the valve numbers, "automatically open placing the RHR and LTOP systems in service." That's a direct quote. I'll skip a couple of sentences. "The RHR and LTOP systems cannot be manually activated by the operator." That is also a direct quote from the SER. I didn't find those statements anywhere in the DCD.

MR. BUDZYNSKI: I'll have to go back and take a look at that.

CHAIRMAN STETKAR: Take a look at that because and if indeed that is part of your basis for

determining that the adequacy of whether its main control room alarms or operator prompts or whatever it is to enable the overpressure protection at an appropriate point. If that served as a basis, you may need to rethink that.

MR. BUDZYNSKI: Okay. Yes because I know I went over the RAI and it seemed to me like how you stated it was once you get below the alarms in the control room allows the operator now to manually set up and use it. And that's my interpretation.

CHAIRMAN STETKAR: I tried to make sure that going back up in pressure, I couldn't find and reconfirm and we confirmed this morning, going back up in pressure, there wasn't anything automatically that would close those valves, thereby isolating the relief valve.

MR. BUDZYNSKI: Okay. Jeff, do you have anything to add to that?

MR. SCHMIDT: Hi. I'm Jeff Schmidt from the same branch John is, reactor systems. I helped review that section and the way I interrupt it was that yes, power had to be manually restored to that valve and then when it got to the right conditions it would open automatically. That's what I, when I reviewed 547, I thought that's what it said.

CHAIRMAN STETKAR: Okay. Well I think you may need to go back and either ask the applicant for clarification because that doesn't seem to be at least what I can read from the DCD or the responses to the RAIs or what MHI told us this morning about how the system works.

MR. SCHMIDT: Okay.

CHAIRMAN STETKAR: More on RHR suction valves. Did, this is, we referred to a report this morning that I didn't look through regarding questions about the relief capacity of the RHR suction valves versus injection capacity from the SI pumps and whether or not the relief valves had adequate flow capacity to prevent pressurization up to whatever it is, 900 pounds or something like that. Did you look at that, the analyses that are in that, I guess it's a technical report?

MR. BUDZYNSKI: Yes I did, but its been such a long time.

CHAIRMAN STETKAR: Okay.

MR. BUDZYNSKI: I mean we started this several years ago I think, on this.

CHAIRMAN STETKAR: Well we asked MHI at least to try to get back to us with a little bit more clarification on those pressure responses.

MR. BUDZYNSKI: Okay.

CHAIRMAN STETKAR: The issues of their ingress into the RHR pump and I know you do have an open item on that. It's a little bit more complicated as I tried to lay out this morning than simply loss of the RHR cooling function because these RHR pumps provide other things in the plant that might indeed be much more important than close loop residual heat removal, that being long term cooling in the RWSP and things like that. So I'm hoping that as you follow through on that open item, that doesn't get separated simply because we are talking about Chapter 5 here and those might be Chapter 6 issues for the same pumps.

MR. BUDZYNSKI: No, we just finished the gas accumulation on AP1000 and they did an excellent job on that. So, I will use that material that I gain from that into this.

CHAIRMAN STETKAR: I recognize that its not the role certainly of the staff nor the certainly the ACRS to design nuclear power plants. That's not our role at all but its curious that given what we know about possible vortexing the RHR pumps especially during things like mid loop operation that this design has the suction valve coming off the side of the loop rather than for example, the bottom of the loop which

would give you several more inches below that mid loop value of margin. Did you ask MHI at all about that from a design perspective?

MR. SCHMIDT: I didn't but I think Jeff had something to do with that part.

CHAIRMAN STETKAR: And Jeff would like to say something.

(Laughter.)

MR. SCHMIDT: Yes this is Jeff Schmidt again. Yes, we looked at that and there's an I tack to test that actually the mid loop level but normally they keep it above mid loop for as their minimum value.

CHAIRMAN STETKAR: Four inches though.

MR. SCHMIDT: Right.

CHAIRMAN STETKAR: Its .33 feet.

MR. SCHMIDT: Yes, right. I know its not much.

CHAIRMAN STETKAR: You are not allowed above --

MR. SCHMIDT: No and that's one of the reasons for this question.

CHAIRMAN STETKAR: Okay.

MR. SCHMIDT: As the open item, yes. I had the same concern. The other concern is you know,

the RHR pump has a high gallons per minute and its more than I've seen in other designs. So I was worried that four inches wasn't going to be adequate for the higher pump flows that I've seen. So that's the reason for the open item.

CHAIRMAN STETKAR: Okay, good. As long as you are tracking that?

MR. SCHMIDT: Yes, we are.

CHAIRMAN STETKAR: You know in principal if everything works perfectly you know an inch is good enough. But in practice.

MR. SCHMIDT: Right. Yes, that's --

CHAIRMAN STETKAR: Sometimes it doesn't work perfectly.

MR. SCHMIDT: We are engaged with MSI.

CHAIRMAN STETKAR: Two more things --

MEMBER BLEY: I'm sorry. I wanted to follow it up.

CHAIRMAN STETKAR: No sure go ahead. Certainly.

MEMBER BLEY: I thought of it now and I don't remember seeing it. It is probably Jeff again for this one but I'll put it to you. Should in fact an operation they not at some point maintain that narrow margin and they actually vortex and pull air

into the eye of the pump, could you look at the capability of them to vent that air and get RHR started again? That's been a very difficult maneuver and some plants depends on the design of the plants.

MR. SCHMIDT: I didn't hear all of the question. Could you repeat the question please?

MEMBER BLEY: Did you look at the issue and get satisfied that should an operation deliver news that control and vortex and pull air into the eye of the RHR pump that they have vent capability so that they could restore flow because that's been a very difficult maneuver at some plants that others it seems pretty easy to get the pumps going again?

MR. SCHMIDT: We haven't specifically looked at that. We've looked at the whole RHR system and looked for places where gas could accumulate and where they can vent it and they are basically following NEI guidance 09-01 where they try not to, they have capability of venting and you know, no high points in there where you would not want high points. They also have, I think, some capability to vent to the RWSP as kind of, as a system to --

MEMBER BLEY: From the eye of the pump? Near the pump?

MR. SCHMIDT: No.

MEMBER BLEY: The places people have gotten into trouble are cases where the pump is a relative high point and they actually vortexed and got air all the way into the eye of the pump. Then it was very hard to clear the pump and actually restore flow.

MR. SCHMIDT: Well, I think that's one of the purposes of this open item is that we're looking for --

MEMBER BLEY: That's why I asked.

MR. SCHMIDT: Is it the potential of vortexing down to the pump and its effect on the pump. You are basically carrying it farther and saying look if I have vortexing to the pump, how can I then restore the pump.

MEMBER BLEY: Its happened quite a few times and that's why I think its worthy of a careful look.

MR. SCHMIDT: Okay, I understand.

CHAIRMAN STETKAR: It's somewhat related to a question I asked this morning about the function of the spent fuel pool gravity draining. That's the question. That can get suction above the pump, restore suction to the pump but MHI seemed to say that, they essentially were giving up on the RHR pumps and going into a different cooling mode.

MR. SCHMIDT: Yes.

CHAIRMAN STETKAR: Which would lead me to believe that perhaps there are concerns about their ability to vent the pumps once you have air.

MR. SCHMIDT: My understanding of this spent fuel pool was just to, not necessarily, in an RAI response, they said its not to restart the pumps. It is basically to make, to another water source to keep the core covered.

CHAIRMAN STETKAR: But eventually, I mean, you, eventually you are putting cold water in from the spent fuel pool, refilling the spent fuel pool from the makeup pump from the RWSP venting steam out of the primary system and cooling the core that way. It's sort of bleed and feed kind of cooling mechanism eventually you've got to take heat out of the containment.

MR. SCHMIDT: Right.

CHAIRMAN STETKAR: And the only way you can take heat out of the containment is with those pumps that you just gave up on.

MR. SCHMIDT: Right. Because they also act as the containment spray pumps.

CHAIRMAN STETKAR: And the RWSP cooling pumps.

MR. SCHMIDT: Right.

CHAIRMAN STETKAR: Your re-circulation pumps if you want to call them that.

MR. SCHMIDT: Right.

CHAIRMAN STETKAR: So, regardless of whether they will survive -- you know it could be quite a while because you've got decay heat working for you. But regardless of the time that you might be able to survive in this sort of what's called a bleed and feed cooling mode, eventually they should be, there should be provisions to get those pumps back or some sort of alternate cooling function.

MR. SCHMIDT: I don't think we looked at that level of detail to get them restarted.

CHAIRMAN STETKAR: You've heard our concerns.

MR. SCHMIDT: Right. Yes, I think it can be addressed on this open item.

CHAIRMAN STETKAR: Yes. Okay. Two more on RHR. I just look RHR systems. If you have ever operated a plant, you love RHR systems. There was a question on I believe I tack, let me just make sure I have my notes correctly here. The I tack to verify adequate net positive suction head for the RHR pumps and apparently and I think there is an open item on

this and I guess it's the same open item. It is all involved with the same type of issue. But, its my understanding MHI proposed that that functional testing be performed at mid loop operation because they felt that was the most limiting condition. Is there concern because the same pumps do perform the RWSP cooling function and therefore must take suction from some elevated temperature in the RWSP through the, their own set of suction screens and provide cooling. Is there any concern regarding available net positive suction head for those same pumps under those cooling modes? And the follow on question of course is does this design include any credit for containment accident pressure to maintain net positive suction head for those pumps under accident conditions where you require them to operate in the ultimate core containment heat removal capability? So this is now more of the Chapter 6 but it's the same issue of how do I, what are the most limiting conditions that I need to actually establish during the pre-operational testing program, the I tack stuff to get us adequate assurance that the pumps will have adequate net positive suction head during any mode that we might be operating those pumps?

MR. SCHMIDT: Yes, that is a 6.3 concern

because it really goes to the containment spray at this point. They do take cap credit for the SI injection. They take the vapor pressure curve. So we've looked at it fairly heavily from SI injection pump because it is a high energy pump. We haven't really looked at it really from the containment spray pump because its not as high energy as the SI pump. But I think that's probably an action we should take, is to, I mean we've done a very detailed audit on the SI pumps. But we haven't looked at it --

CHAIRMAN STETKAR: I'm sure we'll hear more about that in Chapter 6.

MR. SCHMIDT: Yes.

CHAIRMAN STETKAR: I was just a little bit concerned because you know these pumps from strictly the Chapter 5 perspective are our RHR pumps and one might argue that the mid loop operation for that function might be limited for that function but their other function is also relevant.

MR. SCHMIDT: Yes, very much so. And we did really look at this from more of an RHR decay heat removal focus and 6.3 really covers I think your other concern.

CHAIRMAN STETKAR: Okay. We'll make sure to visit that in 6.3 then. Last question on RHR.

There was some discussion about the pump minimum flow recirculation line.

MR. SCHMIDT: Right.

CHAIRMAN STETKAR: And I see where the line is. The line comes off the discharge side, downstream side from the heat exchanger and goes back to the pump. Pretty standard. There was some concern that said the, let me see if I can abbreviate my notes here. The reference is made to NRC Bulletin 88-04 and NRC Generic Letter 89-04, in particular regarding operation of pumps on minimum flow recirculation. And as best as I can determine, reading NRC Bulletin 88-04 there were two concerns identified in that particular bulletin. One is that in some plants apparently there is a configuration where you may have a common minimum flow circulation line for several pumps and that with two or more pumps operating, depending on how the line is configured and the differential pressures indeed one of the pumps might be dead headed. So there's a question about dead heading of the pumps during minimum flow recirculation which pretty evidently is not a concern on this plant because the design of the plant.

The second concern in and let me go to 89-04 before I get back to the second concern. There's

a concern about whether or not minimum flow recirculation lines, in particular without the capability for instrumented flow could be used to verify functional performance of pumps because in some plants they just use the mini flow line for the pump functional testing. And MHI for this particular design, doesn't do that. They do the full flow functional test through the test line at RWSP. So that's not an issue.

MR. SCHMIDT: Right.

CHAIRMAN STETKAR: Now back to the second issue though in the Bulletin 88-04 there seem to have been concerns about whether or not the actual flow capacity through the minimum flow recirculation line was adequate to protect the pump if it was placed into a situation where it needed to operate for some extended period of time under minimum recirculation conditions. I didn't read all of the details or look at all of the references but apparently there were some concerns about some regimes of pump operation where if you didn't size the minimum flow recirculation line properly you could indeed get problems with pump instabilities and damage to the pump. Because I read through the responses. The responses seem to adequately address the notion of

potential dead heading through the mini flow recirculation line and functional testing of the pumps. I didn't see anything that addressed the proper sizing of the minimum flow recirculation line or any tests that would be performed to verify that indeed the pumps could operate stably for an extended period of time and I don't know what extended means so I'm not going to try to quantify that. Under that unit, minimum flow recirculation. So I was curious whether you had thought much about that because the initial conclusion was that the design is okay and they need to do any pre-operational tests with flow through, just the minimum flow recirculation.

MR. SCHMIDT: No, I don't think we really addressed on the mini flow. We were more concerned about the full flow test and whether that would be a problem with the mini flow line that could potentially occur. But we didn't really -- the only thing we looked in the mini flow line whether if there was active components that a single failure could cause that would cause the pump to fail. But we did not look at the sizing of the mini flow --

CHAIRMAN STETKAR: When I went back and I read the Bulletin, that 88-04 it is a concern. Its obviously design specific.

MR. SCHMIDT: Right.

CHAIRMAN STETKAR: Pump design specific and line size design specific that was raised in that bulletin and I didn't see where any of, dismissing a pre-operational test with some sort of flow through that line to confirm that indeed its sized and configured properly would resolve that. And now I'll stop talking about RHR. If anybody else wants to talk about RHR, feel free, chime in any time. Okay, continue, I'm sorry.

MR. BUDZYNSKI: Okay. The next section is 5.4.11 pressurizer relief tank. This is similar to current PWR designs. It has the capacity, 100 percent of the full power pressurizer steam volume, used on a design basis events to prevent pressurization of the reactor point system and pressurizer. Received steam from the pressurizers via SRVs and the SDVs and receives simple gasses from the high point vent system.

We have three open items here. Open item 5.4.11-1 provides additional information support at the PRD and are designed for full volume to prevent PRD collapse without nitrogen blanket being there. I believe I found enough information to close that out. But I would like to see the response anyway.

Open item 5.4.11-2 provide additional information to support that the PRT rupture disks do not pose a missile threat with respect to design and location within the containment. That too I think I have enough information. I went back and I reviewed a couple of additional prints, a couple different sections. I think I have enough information on that but I would like to see the response too on that.

And Open item 5.4.11-3 provide additional information to support Seismic Category I/non-seismic SSCs interfact requirement RG-128-C-3 regulatory position. I think I also got information on that to close that one out but I would like to see what they have.

CHAIRMAN STETKAR: And it sounded, not trying to pre suppose anything it sounded from MIH's presentation that these are also relatively straightforward.

MR. BUDZYNSKI: Yes.

CHAIRMAN STETKAR: There shouldn't be any surprises at least on these three items.

MR. BUDZYNSKI: No, you're right. You are right. Pretty straightforward. Okay, the last section I have is 5.4.12. Reactor point system high point vents required by 10 CFR 50.34(f)(2)(vi) and TMI

Action Plan Item II.B.1. Removes RCS to maintain adequate core cooling and one is reactor vessel head vent to the PRT. It also, the pressurizer SDVs to the PRT and the pressurizer DVs to the containment vessel. Standard configuration design, its basically standard type of design. Reactor vessel head and SDVs have two parallel events paths with two nominally closed MOV valves and series. DVs have one path with two MOV valves and series and the DVs are used for severe accidents.

CHAIRMAN STETKAR: John, I was going to ask you about and I'll interrupt you instead that initial bullet under the standard configuration design. It says reactor vessel head and SDV have two parallel event paths with two normally closed MOVs and series. That as best as I can find from the DCD is certainly true for the reactor vessel head event. The flow diagram that's shown in the DCD although there are no words that specifically describe it. It seems to indicate that the SDV block valves are normally open and the SDV depressurization valves are normally closed so that the SDV lines normal configuration is with one normally open motor operated valve and one normally closed motor operated valve.

MR. BUDZYNSKI: I will have to go back

and check that because my diagram indicates that they are both closed but --

CHAIRMAN STETKAR: Oh, I'm looking at Figure 5.1-2. Unfortunately I made a copy out of Revision 3 of the DCD and I didn't go back and look at Revision 2, but check that. I'll ask MHI, let me ask MHI while they are here, somebody is here. Are the SDV block valves normally open?

MR. OGINO: This is Ogino. SDV is normally closed and block valve is normally open.

CHAIRMAN STETKAR: Okay. Block valves normally open. Are there any signals that automatically close the block, the SDV block valves?

MR. OGINO: This is Ogino. Block valves is automatically closed. SDVs cannot be closed.

CHAIRMAN STETKAR: What signals close the SCV block valves because I couldn't find any information about that at least in Chapter 5?

MR. OGINO: Inconsistency and demand signal. Inconsistency by concern and demand signal. We want to close the SDV, we receive demand signal

CHAIRMAN STETKAR: Okay. That's an interlock that if you try to close the SDV and it does not close, then the block valve will close?

MR. OGINO: So sometimes happens. I

think this is same as plant.

CHAIRMAN STETKAR: Yes, what I was looking for is are there any, for example, if you had an SDV open spuriously, which would create a LOCA to the top of the pressurizer, are there any, for example, low pressure safety injection signals or other signals that automatically close the blocked valve to isolate that LOCA path or do you rely on only manual operator action to isolate it?

MR. BUDZYNSKI: I don't recall that.

CHAIRMAN STETKAR: Let's see if we can follow upon that with HR or someone.

MR. BUDZYNSKI: I put that note in there just as a reminder that the steam generator tubes are accumulate gas but they are not required to be vented in 10 CFR50.46a. And there's open item, initially we had this, we wanted them to include a COL but we changed it after discussion to provide procedures or a proposed change to the DCD that would essentially address removal of the non vessel gasses from the rapture system high point vent system. Identify each of the flow paths and what the procedures or changes are made for that. Any questions on that?

CHAIRMAN STETKAR: Not on that. Bill do you want to ask it again? Do you know whether or not

the DVs are powered from AC or DC power?

MR. BUDZYNSKI: The DVs?

CHAIRMAN STETKAR: The DVs.

MR. BUDZYNSKI: I believe they are AC power but I'll check again.

CHAIRMAN STETKAR: That's something that, you know, you probably heard the discussion this morning so we don't need to reiterate it.

MR. BUDZYNSKI: No I missed that. I wasn't available.

CHAIRMAN STETKAR: Oh, you weren't, okay. Well part of the discussion is the DVs are your high pressure melt protection valves. They are really much less important from the high point venting than an accident mitigation. Mitigation at least not prevention perspective. One of the more important potential contributors to high pressure melts are station blackout scenarios and if indeed those valves are AC powered its not all that easy to get them open with no AC power. So the question is are they AC or DC powered because many of the scenarios when you really like to get those valves open to depressurize the primary system, change the melt progression, you would really like to have power available.

MR. HAMZEHEE: John also in addition you

asked if it AC. Why is it not DC? That was another question.

CHAIRMAN STETKAR: Well, that's -- yes. I mean if it is AC which division does it come off and all that kind of thing.

MR. HAMZEHEE: The design basis that they are not DC and they are AC. That was another question.

CHAIRMAN STETKAR: Yes, but it's the whole issue of, the purpose of those valves is to change a potential high melt scenario into a low pressure melt scenario. Station blackout is certainly a, traditionally a visible contributor to potential high pressure melt scenarios. In design questions about life of batteries and theoretically in deterministic design space you don't get into the potential high pressure melt scenario as long as you have one of the turbine driven aux feedwater pumps available which survive until the batteries die. But if the same battery supply these valves then they don't help you in that scenario either. So, the power supplies and the longevity of those supplies to those valves in particular could be important. Again, not necessarily from the perspective of high pressure vents in Chapter 5 space but I think this is probably

the only part of the entire DCD and SER that talk about those particular valves.

MR. HAMZEHEE: Right.

CHAIRMAN STETKAR: They are certainly not design basis accident things that are addressed in Chapter 6? This is the only place that we get a chance to really question these valves.

MR. BUDZYNSKI: Any other questions?

CHAIRMAN STETKAR: Any other members have any questions? Excellent. Well since we are so far ahead, I could ask you to read all the acronyms but I won't do that.

(Laughter.)

CHAIRMAN STETKAR: Thank you very, very, very much. And with that I believe we are finished. I would like to but unless you've been keeping very coherent notes, I've lost track a long time ago. So, what we normally do is as I mentioned at the outset, is we're trying to keep a list of items for ourselves. They are not as formal as action items but they are more reminders for us as a subcommittee of questions of merit that come up during our discussions that we want to make sure that we follow up on. So I don't want to try to make them sound too formal but I also don't want to completely lose track of them. In the

past what we've tried to do at the closeout at every meeting is to go through the list of items that have arisen during the meeting and make sure that at least everyone is clear on what they are. As I said, I lost track of them during the meeting.

MEMBER BROWN: Did they write some -- somebody was scribbling.

CHAIRMAN STETKAR: People have been taking notes. My concern about on the public record is that we miss a few, we might have a problem. So, I guess, I don't know. I'll ask the members. Is it worthwhile going through the list that Ilka has or should we wait and try to collect our thoughts after the meeting and then make sure we distribute the list to the staff and you can get it to MHI?

MEMBER BLEY: I think if Ilka circulated her list next week.

CHAIRMAN STETKAR: We've kind of been doing that and that's probably the best idea.

MEMBER BROWN: On the other projects we've gone through the list and if we picked up other ones we did it on two other projects and it seemed to work out okay.

CHAIRMAN STETKAR: It works okay if you only have three or four items. But there was quite a

bit of discussion that might -- my only concern is that something on the public record that's in the transcript, if we miss something it might be missed. So I think I would rather do that but we'll collectively look through our notes, make sure that we have all of the items and then make sure the staff and MHI gets them within the next week or so.

MR. CIOCCO: That's good. That will be very helpful.

CHAIRMAN STETKAR: Yes. With that is there anything from anyone else on the committee? Any questions?

MEMBER BLEY: Not about this but can I raise something else?

CHAIRMAN STETKAR: Absolutely.

MEMBER BLEY: Sometime, we just got a new PRA chapter, new PRA.

CHAIRMAN STETKAR: A new Chapter 19?

MEMBER BLEY: New Chapter 19. The PRA was revised?

MR. SPRENGEL: No, this is Ryan Sprengel. We did provide I think levels one and two of the PRA, the previous report. There will be a revision coming at the end of June.

MEMBER BLEY: Oh in June?

MR. SPRENGEL: Right, but the previous meeting I think there was a request. So just to be clear you know, this was the current one that we've submitted, that's what was provided and then there will be a revision.

MEMBER BLEY: There will be a revision in the June time frame?

MR. SPRENGEL: The end of June, yes. And that is already reflected in the DC Rev 3, Chapter 19.

MEMBER BLEY: Okay.

CHAIRMAN STETKAR: Which is what we just got?

MR. SPRENGEL: No, you received the actual revised PRA.

MR. CIOCCO: Jeff Ciocco, NRC staff. You received probably both. You received the DCD Revision 3, the CDs and we provided you the PRA, the last revision of the PRA. It was a special request you had. So you have DCD Revision 3, which reflects the newer PRA that you don't have yet that is going to be submitted on the docket early July, end of June.

MS. BERRRIOS: So you have level 1, level 2 and level 3 but which one are you submitting in June?

MR. SPRENGEL: Levels 1 and 2 will be

revised in June.

MR. HAMZEHEE: What you have is last time some of the members expressed interest in having a copy of the existing PRA. That's what this and some did not have it so we just provided to you again.

MEMBER BLEY: The reason I raise this is I understand there's going to be more substantial use of the PRA.

MR. HAMZEHEE: Yes.

MEMBER BLEY: In this application than in others, so was interested in when we would have the most current PRA and some time here how the folks are going to look at this, if you are going to look at it differently than we have in the past. So we don't need to address that now, but we are going to want to know about that.

CHAIRMAN STETKAR: Let me do two more procedural things and we'll close the meeting. Is there any member of the public here who wishes to make any comments or statements? Okay. If there isn't then I will adjourn the meeting.

(Whereupon the above-entitled meeting was concluded at 1:52 p.m.)

Presentation to ACRS

Chapter 5: Reactor Coolant and Connecting Systems

Mitsubishi Heavy Industries, Ltd.
May 27, 2011

MNES Presenters

Con Wilson – Lead Presenter

Mitsubishi Nuclear Energy Systems, Inc.

Yosuke Katsura – Technical Expert

Mitsubishi Nuclear Energy Systems, Inc.

Chapter 5 Lead in MNES

Hideki Fujimoto – Technical Expert

Mitsubishi Heavy Industries, Co. Ltd.

Chapter 5 Lead in MHI

Takafumi Ogino – Technical Expert

Mitsubishi Heavy Industries, Co. Ltd.

Chapter 5 Engineer

Takatoshi Hirota – Technical Expert

Mitsubishi Heavy Industries, Co. Ltd.

Chapter 5 Engineer

Acronyms (1/2)

CCW	:Component Cooling Water System
CL	:Cold Leg
CRDM	:Control Rod Drive Mechanism
CS/RHR	: Containment Spray/ Residual heat Removal
CSS	:Containment Spray System
CVCS	:Chemical and Volume Control System
CVDT	:Containment Vessel Reactor Coolant Drain Tank
DV	:Depressurization Valve
EFPY	:Effective Full Power Years
EOL	:End of Life
ESWS	:Essential Service Water System
HL	:Hot Leg
ISI	:Inservice Inspection
LTOP	:Low Temperature Overpressure Protection
MCR	:Main Control Room
MOV	:Motor Operated Valve
PRT	:Pressurizer Relief Tank

Acronyms (2/2)

PSV	:Pressurizer Safety Valve
P-T	:Pressure-Temperature
PTLR	:Pressure Temperature Limit Report
PWSCC	:Primary Water Stress Corrosion Cracking
RCL	:Reactor Coolant Loop Piping
RCP	:Reactor Coolant Pump
RCPB	:Reactor Coolant Pressure Boundary
RCS	:Reactor Coolant System
RT_{NDT}	:Reference Nil Ductility Temperature
RT_{PRS}	:Reference Pressurized Thermal Shock Temperature
RV	:Reactor Vessel
SCC	:Stress Corrosion Cracking
SDV	:Safety Depressurization Valve
SG	:Steam Generator
SGTR	:Steam Generator Tube Rupture
SSCs	:Structure, System, and Components
UT	:Ultrasonic Testing

DCD CHAPTER 5: REACTOR COOLANT AND CONNECTING SYSTEMS

Section		Major Contents
5.1	Summary Description	Design Feature of Reactor Coolant System (RCS)
5.2	Integrity of Reactor Coolant Pressure Boundary (RCPB)	5.2.1 Compliance with Code and Code Cases (open item)
		5.2.2 Overpressure Protection
		5.2.3 Reactor Coolant Pressure Boundary (RCPB) Materials
		5.2.4 Inservice Inspection and Testing of RCPB
		5.2.5 RCPB Leakage Detection
5.3	Reactor Vessel (RV)	5.3.1 Reactor Vessel (RV) Materials
		5.3.2 P-T Limits, Pressurized Thermal Shock (PTS), Charpy Upper Shelf Energy (open items)
		5.3.3 RV Integrity
5.4	RCS and Subsystem Design	5.4.1 Reactor Coolant Pumps (RCPs) (open items)
		5.4.2 Steam Generators (SGs)
		5.4.3-5.4.11 RCL, RHR, Pressurizer, PRT, etc. (open items)
		5.4.12 RCS High Point Vents (open item)

5.1 Reactor Coolant System Summary

- A 4-loop plant with safety and performance enhancements

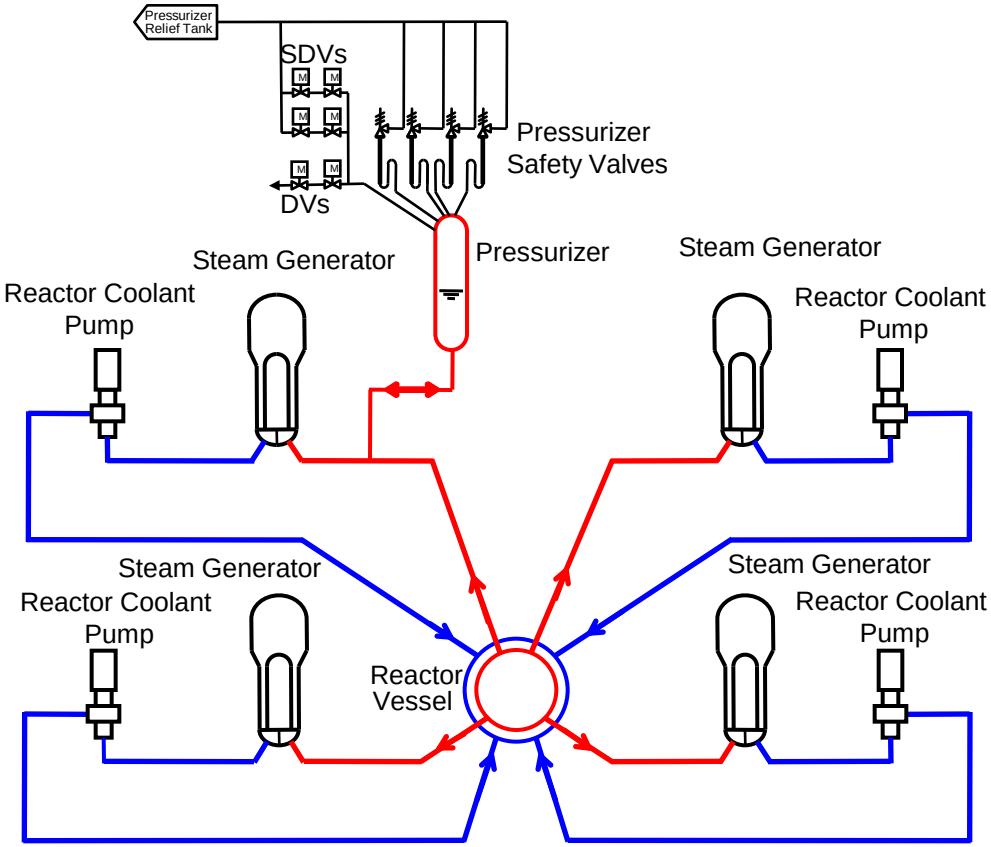

5.2.1 Compliance with 10CFR50.55a Codes and Code Cases

- *ASME Section II – 2001 Edition with 2003 Addenda*
- *ASME Section III – 2001 Edition with 2003 Addenda*
  - ✓ *For pipe seismic design – 1992 Edition with 1992 Addenda*
  - ✓ *Class 2 & 3 piping analysis – 1989 Edition with 1989 Addenda*
- *ASME Section IX – latest Edition at time of welding*
- *ASME Section XI – 2001 Edition with 2003 Addenda*

Open Item Subject	Description of Open Item
SER & RAI 05.02.01.02-7 DCD 5.2.1.2 "Compliance with Code Cases" •NCA-1140 •Code Case N-782 •RG 1.84	➢ NCA-1140 disallows use of Code Edition earlier than 3 years prior to construction permit. • 9'08 R-COLA date implies violation of NCA-1140. • Code Case N-782 allows Code Edition endorsed by DCD • However, Code Case N-782 is not in RG 1.84 ➢ MHI Response • Code Case N-782 will be added to DCD Table 5.2.1-2 along with a note of explanation justifying its use.

5.2.2 Overpressure Protection

- The Overpressure protection system has the following design features:

  - Pressurizer safety valves on 4 separate nozzles at the top of the pressurizer.

  - Low temperature overpressure protection (LTOP) is provided by the Containment Spray/Residual Heat Removal (CS/RHR) pump suction relief valves installed in each train of the RHR system.

All RAIs are closed in this section

5.2.3 RCPB Materials (1/2)

Category		Material	Technical Background
Low Alloy Steel	Forgings	SA-508 Grade 3	Good fracture toughness property
	Plates	SA-533 Type B	
	Welds	Low alloy steel electrode	
Austenitic Stainless Steel	Forgings	F316(*), F316LN	Low susceptibility to Stress Corrosion Cracking (SCC) in PWR
	Piping	TP 316(*), 316 LN, 316L	
	Castings	CF-3A, 3M, 8(*), 8M(*)	Δ-ferrite is limited to prevent thermal aging
	Cladding, Buttering	308L/309L 316L	Low susceptibility to SCC in PWR
Ni-Cr-Fe Alloy	Tube/Pipe	UNS N06690 (TT)	High resistance to Primary Water Stress Corrosion Cracking (PWSCC)
	Cladding, Buttering	Alloy 52/152	

(*) Limited carbon content materials

5.2.3 RCPB Materials (2/2)

➢Major RAIs *(closed)*

RAI No.	Question 05.02.03-X	RAI Topic / NRC Concern	RAI Response / DCD Impact
644-5077	27	**Minimum Preheat Temperature**	➢Minimum preheat temperature of ferritic RCPB material was accepted by showing the test data ➢MHI uses Post weld baking and it was permitted by revised RG-1.50 issued on March 2011
644-5077	29	**Carbon Content of Stainless Steel**	➢Limited carbon content stainless steel will be used ➢Especially for Stagnant region: ≤ 0.03%
644-5077	30	**To avoid SCC susceptibility on cold work**	➢ Buffing after J-Groove weld and Dissimilar Metal Weld

5.2.4 Inservice Inspection and Testing

- **Accessibility of equipment and personnel**
  Designed to allow personnel and equipment access in accordance with ASME Sec.XI IWA-1500

- **Compliance with 10 CFR 50.55a(g) and ASME Sec.XI**

- **Inservice Inspection (ISI) Program will be prepared as part of Chapter 13, "Operational Programs"**

Major RAIs *(closed)*

RAI No.	Question 05.02.04-X	RAI Topic / NRC Concern	RAI Response / DCD Impact
254-2075	8	**Accessibility of Dissimilar and Austenitic SS welds**	➢ In accordance with 10 CFR 50.55a(b)(2)(xv)(A)(2) and 10 CFR 50.55a(b)(2)(xvi)(B)

5.2.5 RCPB Leakage Detection

- **RCPB leakage is classified as either identified or unidentified leakage**
  - **Detection of Identified Leakage**

    Monitored by Containment Vessel Reactor Coolant Drain Tank (CVDT) pressure, temperature, and level indications

  - **Detection of Unidentified Leakage**

    Monitored by air particulate radioactivity monitor, airborne gaseous radioactivity monitor, air cooler condensate flow rate monitoring system, and containment sump level and flow monitoring system

Major RAIs *(closed)*

RAI No.	Question 05.02.05-X	RAI Topic / NRC Concern	RAI Response / DCD Impact
165-1967	4	**Detect for prolonged low-level unidentified leakage**	Leakage management procedure is developed as Operating and Emergency Operating Procedure

5.3 Reactor Vessel

Reactor Vessel Configuration:

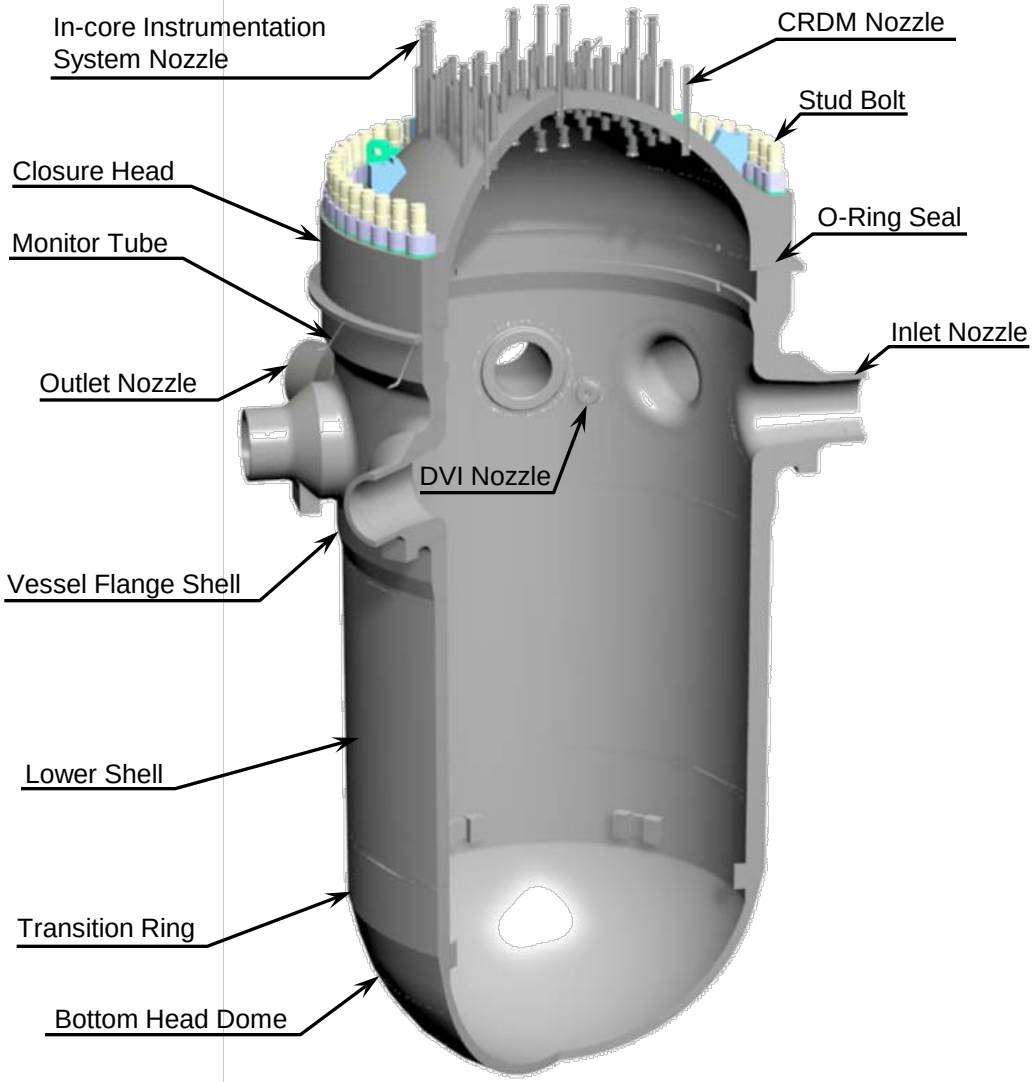

Structural Design Improvements

- **No penetrations on Bottom Head Dome**
- **Reduced number of instrumentation nozzles**
- **SA-508 Gr. 3 Cl. 1 with inner stainless steel cladding**
- **Fracture toughness requirements of ASME Code Sec. III App. G and 10 CFR 50 App. G are satisfied**

5.3.2 RV Pressure-Temperature Limits

- **Heatup and cooldown P-T limit curves are established in accordance with 10 CFR 50 App. G and ASME Code Sec. XI App. G to protect the RV from fast fracture during heatup and cooldown.**

- **P-T limit curves are conservatively based on 60 Effective Full Power Years (EFPY) rather than the 60 year design life.**

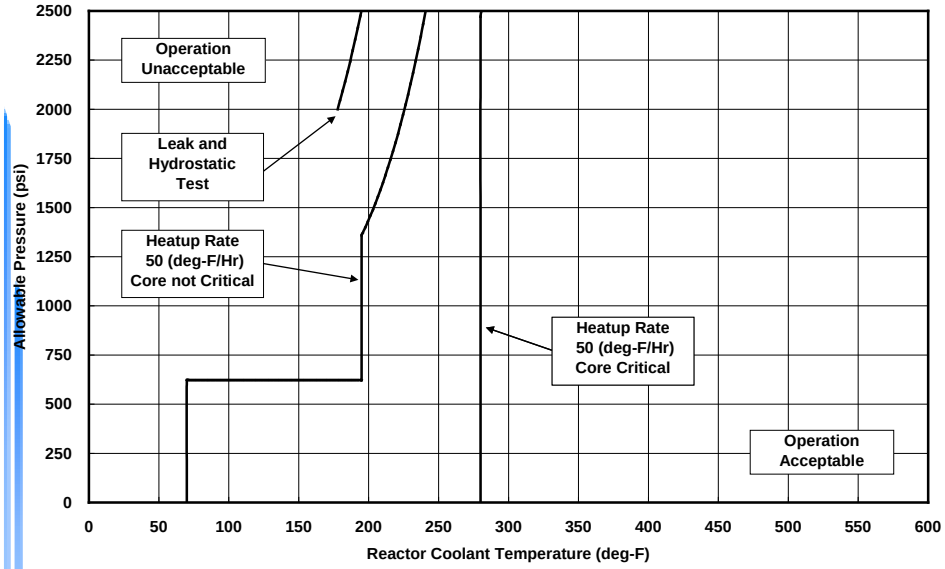

Representative P-T Limit Curve for Heatup up to 60 EFPY

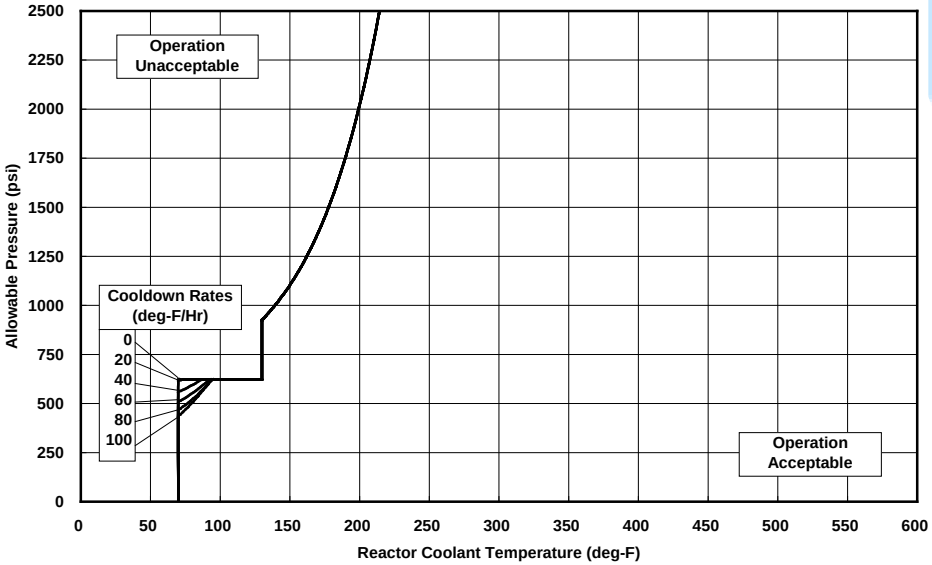

Representative P-T Limit Curve for Cooldown up to 60 EFPY

5.3.2 RV Pressurized Thermal Shock

RT_{PTS} values at the end of plant life are evaluated and satisfy the 10 CFR 50.61 screening criteria.

End-of Life RT_{NDT} for Beltline Materials

Location	Fluence at ID [n/cm^2]	Cu Content [wt %]	Ni Content [wt %]	RT_{NDT} and/or RT_{PTS} [deg F]			
				Initial	End of Life EOL (60EFPY)		
					ID	1/4-T	3/4-T
Beltline Region Forgings	**9.8×10^{18}**	**0.05 max**	**1.00 max**	**< 0**	**76.7**	**67.8**	**53.0**
Beltline Region Weld	**8.5×10^{18}**	**0.08 max**	**0.95 max**	**< -20**	**148.6**	**129.8**	**92.1**

10CFR50.61 screening criteria: 270 deg. F for forgings
300 deg. F for weld materials

P-T Limit - RAI Open Item Summary

Open Item Subject	Description of Open Item
SER & RAI 05.03.02-1 DCD 5.3.2 “Pressure-Temperature Limit”	➢ Generic P-T Limit Report (PTLR) with bounding P-T Limit curves based on bounding material properties and projected fluence following the guidelines of GL96-03 status. ➢ MHI submitted US-APWR Reactor Vessel Pressure and Temperature Limits Report (MUAP-09016), Rev.1 on 2/1/10
SER 05.03.02-2 **RAI 05.03.02-11** DCD 5.3.2 “Pressure-Temperature Limit”	➢ The P-T Limits for the reactor vessel are based on evaluation of the RV beltline and closure flange regions. Explain how this relates to the nozzles and the remainder of the RV. ➢ MHI Response • RV fracture mechanics evaluation addressing P-T limits for the entire RV, including the nozzles is in-process

5.4.1 Reactor Coolant Pumps

➢ Pump Performance

- ✓ RCPs provide adequate reactor coolant flow rate.
- ✓ Shaft seals employ a well-established seal system that has been proven in many operating plants.

➢ Pump Flywheel Design

- ✓ RG 1.14 requirements are satisfied for:
  - Ductile failure analysis
  - Nonductile failure analysis
  - Fatigue Crack growth analysis
  - Excessive deformation analysis
- ✓ The flywheel ISI interval is set at 20 years
- ✓ Fracture mechanics analysis shows the probability of flywheel failure is negligible (on the order of 10^{-10}).

5.4.1 Reactor Coolant Pumps

Flow Rate	112,000 gpm
Head	306.9 ft
Rotating speed, synchronous	1,200 rpm
Unit design pressure	2,485 psig
Unit design temperature	650 ˚F
Unit overall height	28 ft
Power	8,200 hp
Voltage	6,600 V

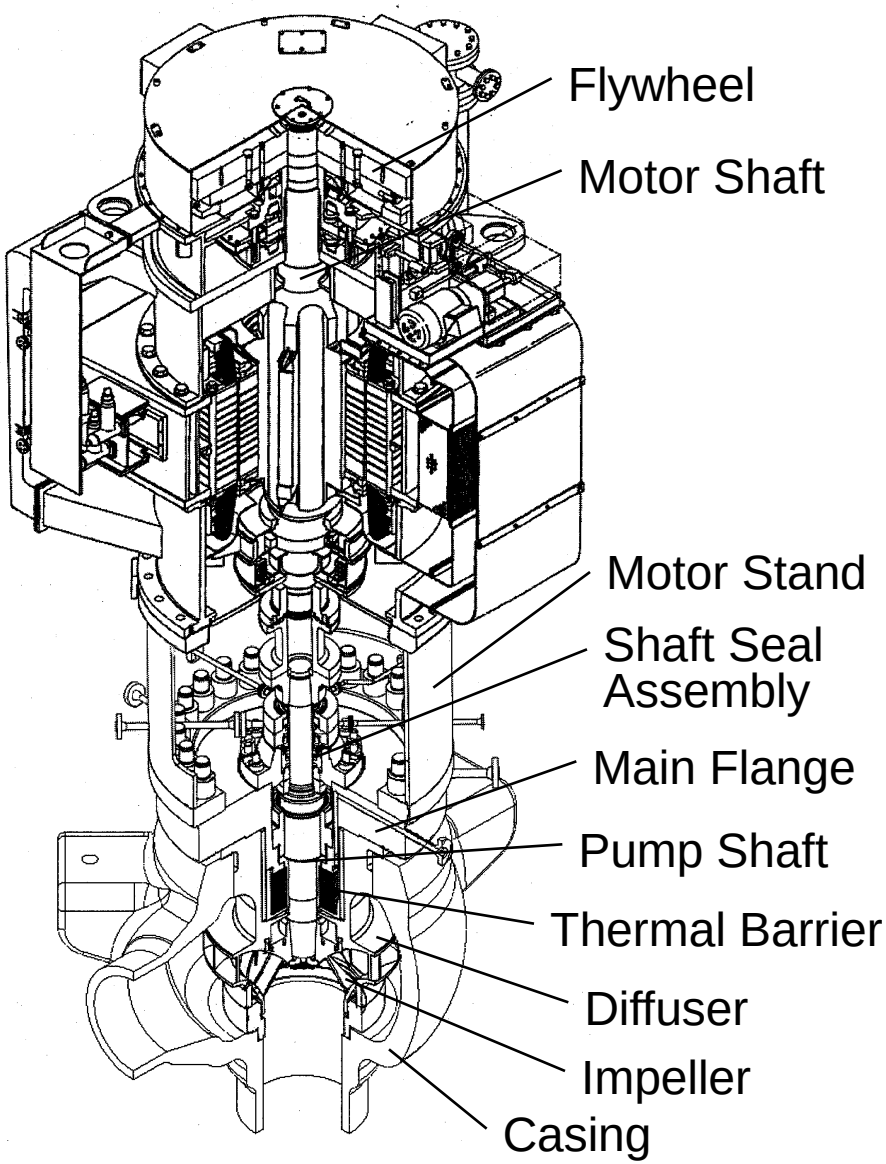

RCP - RAI Open Item Summary

Open Item Subject	Description of Open Item
SER 05.04.01.01-2 **RAI 05.04.01.01-5 & 8** DCD 5.4.1.1 “Pump Flywheel Integrity”	➢ The staff requested additional information: • Critical flaw size associated with 1500 rpm design speed • Reliable detection threshold for Ultrasonic Testing (UT) inspection ➢ MHI response is being prepared at this time: • Critical flaw > 3” at 1500 design speed • UT threshold for reliable detection is much smaller
SER & RAI 05.04.01.02-1 DCD 5.4.1.2 “RCP Operability without Seal Injection Water”	➢ Additional information requested: • Is there a low-flow alarm in the Main Control Room (MCR)? • How long can the RCP operate without seal injection water? ➢ MHI response is being prepared at this time: • There is a low-flow alarm in the MCR from a flow meter in the seal injection line • Subsection 5.4.1.3.3 refers only to loss of seal injection flow. The RCP can operate indefinitely without seal injection water because of the redundant cooling offered by the thermal barrier heat exchanger.

RCP - RAI Open Item Summary

Open Item Subject	Description of Open Item
SER & RAI 05.04.01.02-2 DCD 5.4.2.1 “RCP Operability without Component Cooling Water”	➢ Since the Component Cooling Water System (CCWS) supplies cooling water to both Chemical and Volume Control System (CVCS) (pump motor, seal water cooler, and oil cooler) and the thermal barrier, explain the meaning of “loss of CCW”. ➢ Identify the DCD section dealing with operator instructions for loss of CCW and seal injection. ➢ MHI Response is being prepared at this time: • Subsection 5.4.1.3.4 is intended to address loss of CCW to the motor bearing oil coolers or the thermal barrier heat exchangers independent of each other. It will be rewritten to make this clearer. “Loss of CCW” in subsection 5.4.1.3.4 does not mean “loss of all CCW.”

5.4.2 Steam Generators

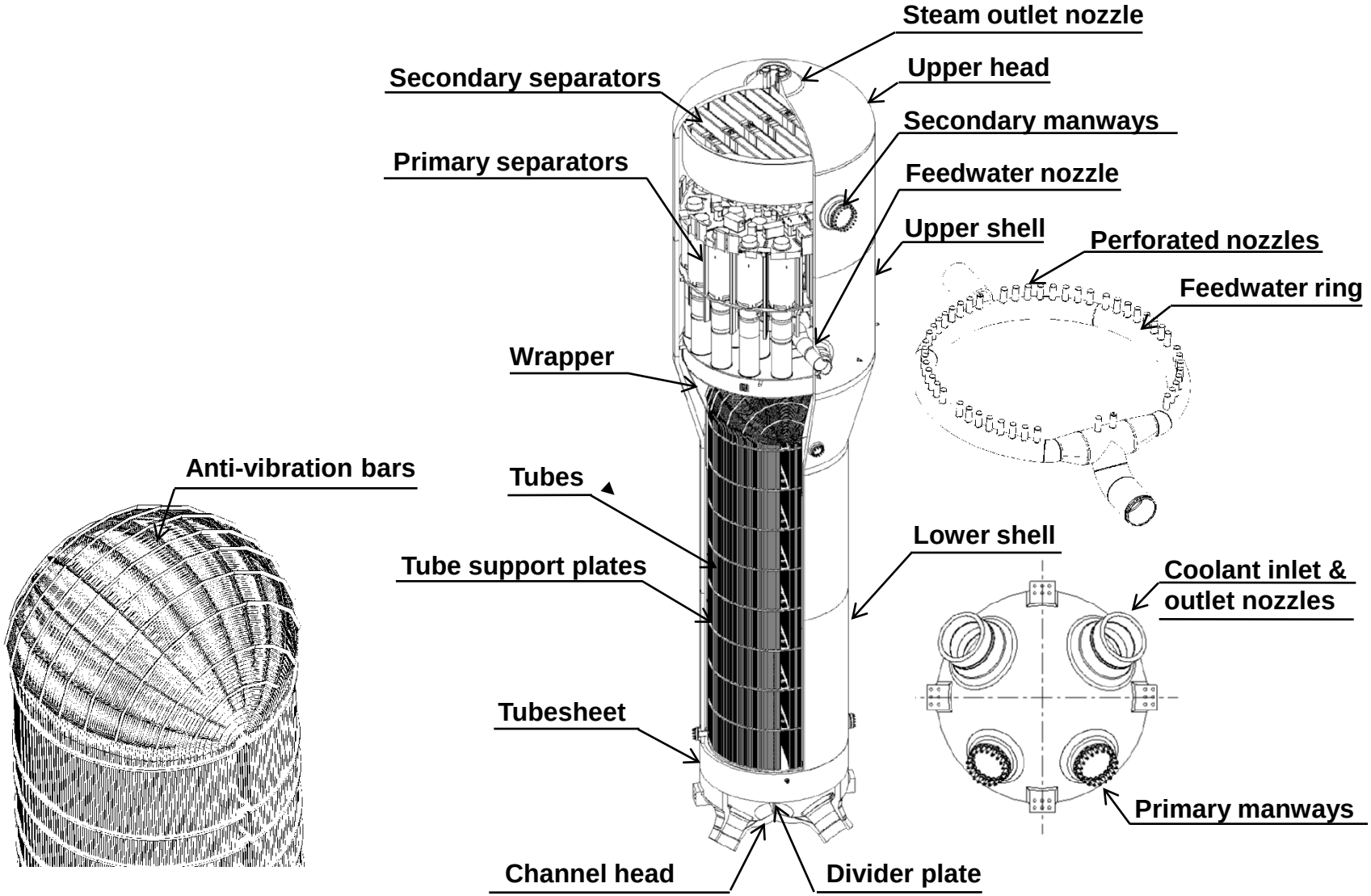

5.4.10 Pressurizer

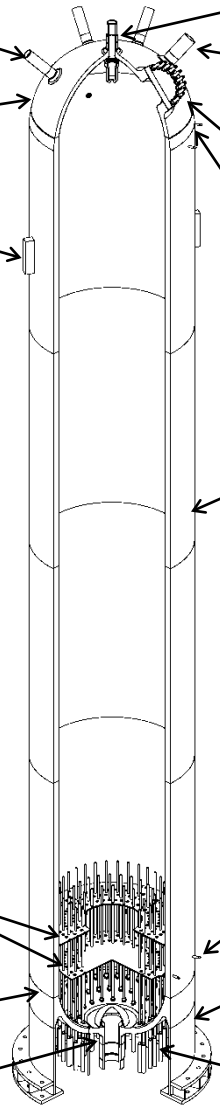

Water volume	Sufficient to prevent uncovering of the heaters following reactor trip and turbine trip
Steam volume	Large enough to prevent water relief through the safety valves following a feedwater line rupture

5.4.11 Pressurizer Relief Tank

- Designed to cool and condense steam discharged from the pressurizer safety valves
- In the event of excess pressure, rupture disks discharge into containment
- The Pressurizer Relief Tank (PRT) rupture disk capacity is greater than the combined capacity of the pressurizer safety valves

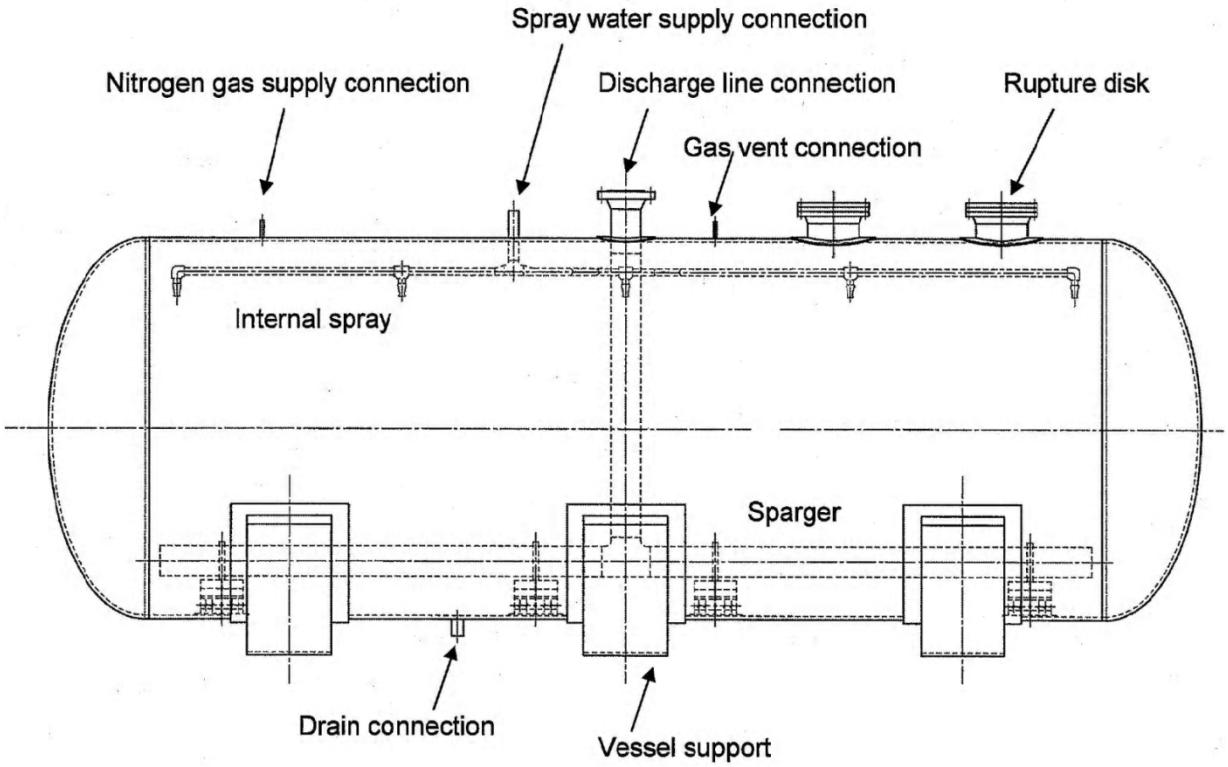

PRT - RAI Open Item Summary

Open Item Subject	Description of Open Item
SER & RAI 05.04.11-01 DCD 5.4.11 “Pressurizer Relief Tank”	➢ Provide additional information about PRT & rupture disks: • The rupture pressure vs PRT design pressure. • The rupture disk flow capacity vs. the combined capacity of the pressurizer safety valves. • The PRT external design pressure. ➢ MHI Response is being prepared at this time. • The rupture disk design pressure is 190 psig +0/-5%. The PRT design pressure is 200 psig. • The pressurizer safety valve maximum flow is 432,000 lb/hr x 4. The PRT rupture disks are sized to a flow greater than this value. • The PRT is required to meet the ASME Section III rules for external pressure where the delta-P is -15 psi.
SER & RAI 05.04.11-02 DCD 5.4.11 “Pressurizer Relief Tank”	➢ Identify a reference and provide a description that shows the PRT rupture disks do not pose a missile threat. ➢ MHI Response is being prepared at this time. • The PRT rupture disks perform their pressure relief function without producing a missile of any type.

PRT - RAI Open Item Summary

Open Item Subject	Description of Open Item
SER & RAI 05.04.11-03 DCD 5.4.11 “Pressurizer Relief Tank”	➢ Provide a description and identify a reference where satisfaction of RG 1.29 position C.3 and SRP Acceptance Criterion 2.F are addressed (interface between Seismic Category-1 and non-Seismic Category-1 Structure, System, and Components (SSCs)). ➢ MHI Response is being prepared at this time. • The US-APWR SSCs comply with these requirements and additional documentation will be provided.

5.4.7 Residual Heat Removal System

➢ RHRS Design Concept

- ✓ The RHRS transfers reactor core decay heat and residual heat from the RCS to the Essential Service Water System (ESWS) through the CCWS.
- ✓ The RHRS is used to transfer refueling water between the refueling cavity and the RWSP during refueling operations.
- ✓ The RHRS is a safety-related system consisting of four independent loops while sharing portions with the containment spray system (CSS).

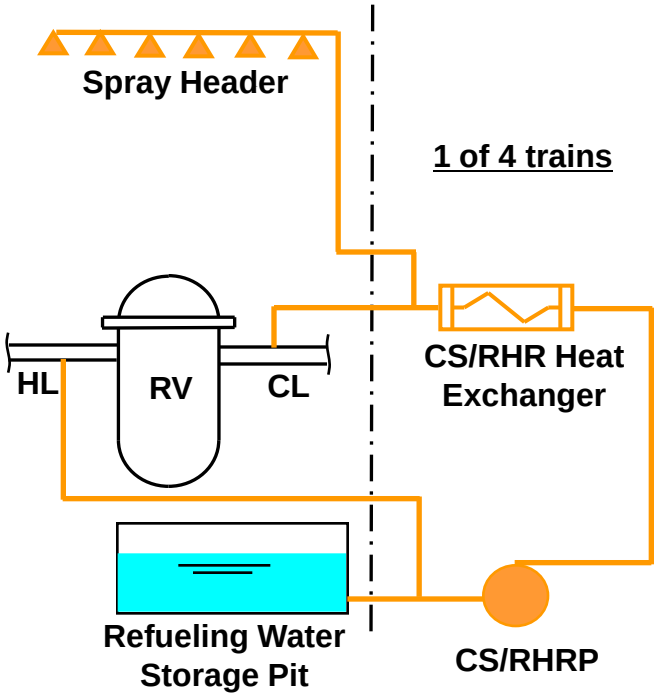

RHRS - RAI Open Item Summary

Open Item Subject	Description of Open Item
SER & RAI 05.04.07-11 DCD 5.4.7 “Residual Heat Removal System”	➢ The current treatment of the gas accumulation issue with respect to the US-APWR is substantial and appropriate; however important aspects of this issue that are potentially unexamined remain. ➢ Additional discussion is needed with the Staff

5.4.12 RCS High Point Vents

➢ Design Concept of RCS High Point Vents

- ✓ A Reactor Vessel Head Vent is used to enhance natural circulation of the reactor coolant by eliminating non-condensable gases in the upper plenum of the RV.
- ✓ SDVs are used to cool the reactor core by feed and bleed operation when loss of heat removal from the SGs occurs.
- ✓ The DVs are used to depressurize the RCS and prevent both high pressure melt ejection and temperature induced Steam Generator Tube Rupture (SGTR).

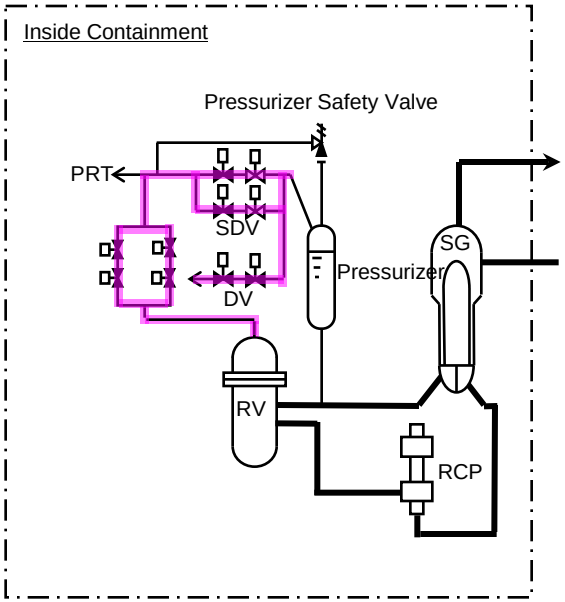

High Point Vents - RAI Open Item Summary

Open Item Subject	Description of Open Item
SER & RAI 05.04.12-05 DCD 5.4.12 “RCS High Point Vents”	➢ SRP acceptance criterion of Section 5.4.12 requires development of procedures to remove non-condensable gases from the SG U-tubes and to operate the vent system. If It is not provided in the DCD, a COL information item should be provided for the COL applicant/licensee to develop operating procedures to fulfill this acceptance criterion. ➢ MHI Response is being prepared at this time.

Status Summary

- There are 11 RAI Open Items.
- Confirmatory items are addressed in DCD Revision 3.

LUMINANT GENERATION COMPANY

Comanche Peak Nuclear Power Plant, Units 3 and 4

ACRS, US-APWR Subcommittee

FSAR Chapter 5 - Reactor Coolant and Connecting Systems

May 27, 2011

Agenda – FSAR Chapter 5, Reactor Coolant and Connecting Systems

- Introduction
- Subsection by Subsection Discussion
  - FSAR Summary – COL Items, Departures
  - SER Summary – Open Items, Confirmatory Items, Proposed License Conditions
- Summary

Luminant

US-APWR

MNES
MITSUBISHI NUCLEAR ENERGY SYSTEMS, INC.

Introduction

- R-COLA authored using "Incorporated by Reference" methodology.
- CPNPP COLA FSAR Chapter 5 takes no departures from the US-APWR DCD
- All plant-specific SER Open and Confirmatory Items have been addressed and will be in FSAR Revision 2.
- COLA Revision 2 is scheduled for June 2011.
- No contentions pending before ASLB.

5.1 Summary Description

- CPNPP COLA FSAR Summary
  - US-APWR DCD Incorporated by Reference
  - No departures or supplements
  - No COL Information Items
- NRC SER Summary
  - 1 “Generic” SER Open Item (1-1) related to US-APWR design certification
  - No Confirmatory Items
  - No proposed License Conditions

5.2 Integrity of RCPB

- **CPNPP COLA FSAR Summary**
  - **US-APWR DCD Incorporated by Reference**
  - **No departures**
  - **10 COL Information Items**
- **NRC SER Summary**
  - **1 Open Item**
  - **3 Confirmatory Items**
  - **2 proposed License Conditions**

5.2 Integrity of RCPB (Open Item)

- Open Item (05.02.03.01-1, related to COL Item 5.2(12))
  - EPRI Water Chemistry Guidelines: identify version to be used.
  - Luminant provided additional information, on May 2, 2011, via an RAI Response.
    - Included an FSAR markup
    - RCS water chemistry will be based on the latest effective revision of the EPRI guidelines.
  - Feedback from the NRC indicates that this will be changed to a confirmatory item.

5.2 Integrity of RCPB (Proposed License Condition 5-1)

- **Proposed License Condition 5-1**
  - **The licensee shall submit to the Director of NRO, a schedule, no later than 12 months after issuance of the COL, that supports planning and conduct of NRC inspections of the PSI/ISI program (including augmented ISI program). The schedule shall be updated every 6 months until 12 months before scheduled fuel load, and every month thereafter until either the PSI/ISI (including augmented ISI program) have been fully implemented or the plant has been placed in commercial service, whichever comes first.**

- **Proposed Luminant Commitment**
  - **Luminant commits to submit a schedule to the NRC that supports the planning and conduct of NRC inspections of operational programs, including the IST program, the PSI program, the ISI program and the reactor vessel surveillance program, no later than 12 months after issuance of the COL or at the start of construction as defined in 10 CFR 50.10a, whichever is later. This is similar to the approach for the ITAAC schedule required in 10 CFR 52.99(a).**

5.2 Integrity of RCPB (Proposed License Condition 5-2)

- **Proposed License Condition 5-2**
  - **The licensee shall implement the preservice testing program prior to initial fuel load.**
- **Luminant Action**
  - **The Preservice Testing Program added to FSAR Table 13.4-201 with an implementation milestone of prior to initial fuel load and implementation requirement of License Condition.**
  - **Luminant proposed a License Condition to read:**
    - **The licensee shall implement the programs or portions of programs identified in FSAR Table 13.4-201 with the "Implementation" of "License Condition" on or before the associated milestones in FSAR Table 13.4-201.**

5.3 Reactor Vessel

- CPNPP COLA FSAR Summary
  - US-APWR DCD Incorporated by Reference
  - No departures
  - 5 COL Information Items
- NRC SER Summary
  - No Open Items
  - 2 Confirmatory Items
  - 2 Proposed License Conditions

5.3 Reactor Vessel (Proposed License Condition 5-3)

- **Proposed License Condition 5-3**
  - **The licensee shall implement a reactor vessel material surveillance program prior to initial criticality.**
- **Luminant Action**
  - **Reactor vessel material surveillance program added to FSAR Table 13.4-201 with an implementation milestone of prior to initial criticality and implementation requirement of License Condition.**
  - **Luminant proposed a License Condition to read:**
    - **The licensee shall implement the programs or portions of programs identified in FSAR Table 13.4-201 with the "Implementation" of "License Condition" on or before the associated milestones in FSAR Table 13.4-201.**

5.3 Reactor Vessel (Proposed License Condition 5-4)

- **Proposed License Condition 5-4**
  - **In order to enable timely NRC review of the pressurized thermal shock (PTS) evaluation using the as-procured reactor vessel material properties, it will be provided within 12 months after acceptance of the reactor vessel.**
- **Luminant Action**
  - **Luminant proposed a License Condition to read:**
    - **The plant-specific PTS evaluation of the as-procured reactor vessel material properties will be submitted to the NRC within 12 months following acceptance of the reactor vessel.**

5.4 RCS Component and Subsystem Design

- CPNPP COLA FSAR Summary
  - US-APWR DCD Incorporated by Reference
  - No departures or supplements
  - No COL Information Items
- NRC SER Summary
  - No Open Items
  - 1 Confirmatory Item
  - No proposed License Conditions

Luminant

US-APWR

MNES
MITSUBISHI NUCLEAR ENERGY SYSTEMS, INC.

Summary

- COL Information Items are addressed in FSAR Chapter 5
- No departures
- One generic and one plant-specific Open Item and five Confirmatory Items
- All RAI responses associated with plant-specific open item and confirmatory items will be in COLA Revision 2
- Five proposed license conditions are being addressed by Luminant

Acronyms

- ACRS — Advisory Committee on Reactor Safeguards
- ASLB — Atomic Safety and Licensing Board
- COL — Combined license
- COLA — COL application
- CPNPP — Comanche Peak Nuclear Power Plant
- DCD — Design control document
- EPRI — Electric Power Research Institute
- FSAR — Final Safety Analysis Report
- ISI — Inservice inspection
- IST — Inservice testing
- LC — License condition
- OI — Open item
- PSI — Preservice inspection
- PTS — Pressurized thermal shock
- R-COLA — Reference COLA
- RCPB — Reactor coolant pressure boundary
- RCS — Reactor Coolant System
- SER — Safety Evaluation Report

United States Nuclear Regulatory Commission

Protecting People and the Environment

Presentation to the ACRS Subcommittee

Comanche Peak Nuclear Power Plant, Units 3 and 4
COL Application Review

Safety Evaluation Report

CHAPTER 5: REACTOR COOLANT AND CONNECTING SYSTEMS

May 27, 2011

Staff's Presentation Order

U.S.NRC
United States Nuclear Regulatory Commission
Protecting People and the Environment

- **Stephen Monarque** - Comanche Peak COLA Lead Project Manager
- **Paul Kallan -** Project Manager
- **Eduardo Sastre -** Technical Staff Presenter

Major Milestones Chronology

U.S.NRC
United States Nuclear Regulatory Commission
Protecting People and the Environment

9/19/2008	COL Application submitted
12/02/2008	COL Application accepted for review (Docketed)
03/16/2009	COL Application review schedule published
10/09/2009	Completion of Phase 1 milestone
11/20/2009	Revision 1 submitted
03/02/2011	Revision to COL Application review schedule

Review Schedule
(Public Milestones)

U.S.NRC
United States Nuclear Regulatory Commission
Protecting People and the Environment

Phase - Activity	Target Date
Phase 1 - Preliminary Safety Evaluation Report (SER) and Request for Additional Information (RAI)	October 2009 (Actual)
Phase 2 - SER with Open Items	March 2012
Phase 3 – Advisory Committee on Reactor Safeguards (ACRS) Review of SER with Open Items	July 2012
Phase 4 - Advanced SER with No Open Items	December 2012
Phase 5 - ACRS Review of Advanced SER with No Open Items	March 2013
Phase 6 – Final SER with No Open Items	June 2013

NOTE: The target dates shown above are currently published milestones.

Technical Review Team

U.S.NRC
United States Nuclear Regulatory Commission
Protecting People and the Environment

- **Eduardo Sastre**
  Component Integrity Branch
- **Robert Davis**
  Component Integrity Branch
- **Timothy Steingass**
  Component Integrity Branch
- **Chang Li**
  Balance of Plant Systems Branch
- **Steven Downey**
  Component Integrity Branch
- **Joel Jenkins**
  Component integrity Branch
- **Gregory Makar**
  Component integrity Branch

Overview of COLA Review

U.S.NRC
United States Nuclear Regulatory Commission
Protecting People and the Environment

SRP Section/Application Section		No. of Questions	Number of OI
5.1	Summary Description	IBR	IBR
5.2.1.1	Compliance with 10 CFR 50, Section 50.55a	2	0
5.2.1.2	Compliance with Applicable Code Cases	2	0
5.2.2	Overpressure Protection	IBR	IBR
5.2.3.2	Compatibility with Reactor Coolant	1	1
5.2.4.	Inspection and Testing of the Reactor Coolant Pressure Boundary (RCPB)	2	0
5.2.5	RCPB Leakage Detection	3	0
5.3.1	Reactor Vessel Materials	3	0

Overview of COLA Review (continued)

SRP Section/Application Section		No. of Questions	Number of OI
5.3.2	Pressure-Temperature limits, Upper-Shelf Energy, and Pressurized Thermal Shock	1	0
5.3.3	Reactor Vessel Integrity	2	0
5.4	Reactor Coolant System Component and Subsystem Design	1	0
Totals		**17**	**1**

Section 5.2.3
Reactor Coolant Pressure Boundary Materials

U.S.NRC
United States Nuclear Regulatory Commission
Protecting People and the Environment

- ***Open Item No. 5.2.3.1-1***
  - COL Information Item No. 5.2-12
    - A COL applicant *should specify the applicable version of the EPRI "Primary Water Chemistry Guideline" that will be implemented.*
  - Issue: The COL applicant did not adequately address the COL Item by specifying the version to be used for CPNPP
- Since then, the applicant response was received and reviewed by staff and it is being considered a confirmatory item

Acronyms

U.S.NRC
United States Nuclear Regulatory Commission
Protecting People and the Environment

- COL – combined license
- COLA – combined license application
- DBA – design basis accident
- FSAR – Final Safety Analysis Report
- GDC – General Design Criteria
- IBR – incorporated by reference
- SER – Safety Evaluation Report
- RAI – request for additional information
- RCOL – reference combined license

U.S.NRC

United States Nuclear Regulatory Commission

Protecting People and the Environment

Presentation to the ACRS Subcommittee

Mitsubishi Heavy Industries (MHI)

US-APWR Design Certification Application Review

Safety Evaluation with Open Items: Chapter 5

REACTOR COOLANT SYSTEM AND CONNECTING SYSTEMS

MAY 27, 2011

Staff Review Team

U.S.NRC
United States Nuclear Regulatory Commission
Protecting People and the Environment

- **Technical Staff Presenters**
  - John Wu – DCD Section 5.2.1.2
  - Steven Downey – DCD Section 5.3.2
  - John Honcharik – DCD Sections 5.4.1.1
  - John Budzynski – DCD Sections 5.4.1.2, 5.4.7, 5.4.11 & 5.4.12
- **Project Managers**
  - Jeff Ciocco – Lead Project Manager
  - Paul Kallan – Chapter 5 Project Manager

Staff Review Team

- **Robert Davis**
  Component Integrity Branch
- **Timothy Steingass**
  Component Integrity Branch
- **Steven Downey**
  Component Integrity Branch
- **Joel Jenkins**
  Component Integrity Branch
- **Thomas Scarbrough**
  Component Integrity Branch
- **Eric Reichert**
  Component Integrity Branch
- **Gregory Makar**
  Component Integrity Branch
- **John Honcharik**
  Component Integrity Branch

Staff Review Team

- **Cheng-Ih Wu**
  Engineering Mechanics Branch
- **John Budzynski**
  Reactor Systems Branch
- **Amrit Patel**
  Reactor Systems Branch
- **Michelle Hayes**
  Reactor Systems Branch
- **Jeffrey Schmidt**
  Reactor Systems Branch
- **Chang Li**
  Balance of Plant Systems Branch

Overview of Design Certification Application, Chapter 5

U.S.NRC
United States Nuclear Regulatory Commission
Protecting People and the Environment

SRP Section/Application Section		No. of Questions	Number of OI
5.2.1.1	Compliance with the Codes and Standards Rule, 10 CFR 5055a	3	0
5.2.1.2	Compliance with Applicable Code Cases	7	1
5.2.2	Overpressure Protection	8	0
5.2.3	Reactor Coolant Pressure Boundary Materials	31	0
5.2.4	Inservice Inspection and Testing of the Reactor Coolant Pressure	8	0
5.2.5	Reactor Coolant Pressure Boundary Leakage Detection	12	0

Overview of Design Certification Application, Chapter 5

U.S.NRC
United States Nuclear Regulatory Commission
Protecting People and the Environment

SRP Section/Application Section		No. of Questions	Number of OI
5.3.1	Reactor Vessel Materials	1	0
5.3.2	Pressure-Temperature Limits, Pressurized Thermal Shock, and Upper-Shelf Energy Data and Analyses	11	2
5.3.3	Reactor Vessel Integrity	1	0
5.4	Reactor Coolant System Component and Subsystem Design	3	0
5.4.1.1	Reactor Coolant Pump Flywheel Integrity	8	1
5.4.1.2	Reactor Coolant Pump	2	2

Overview of Design Certification Application, Chapter 5

U.S.NRC
United States Nuclear Regulatory Commission
Protecting People and the Environment

SRP Section/Application Section		No. of Questions	Number of OI
5.4.2.1	Steam Generator Materials	12	0
5.4.2.2	Steam Generator Program	9	0
5.4.3	Reactor Coolant Piping	0	0
5.4.4	Main Steam Line Flow Restrictor	0	0
5.4.7	Residual Heat Removal System	13	1
5.4.10	Pressurizer	1	0

Overview of Design Certification Application, Chapter 5

U.S.NRC
United States Nuclear Regulatory Commission
Protecting People and the Environment

SRP Section/Application Section		No. of Questions	Number of OI
5.4.11	Pressurizer Relief Tank	3	3
5.4.12	Reactor Coolant System High-Point Vents	1	1
Totals		134	11

Technical Topics
Section 5.2.1.2 – Compliance with applicable Code Cases

U.S.NRC
United States Nuclear Regulatory Commission
Protecting People and the Environment

Compliance with Applicable Code Cases

Open Item 5.02.01.02-07 (RAI 575-4422, Question 05.02.01.02.07)

- In response to RAI 575-4422, 05.02.01.02-07, the applicant added Code Case N-782 to DCD Section 5.2.1.2 Table 5.2.1-2 for application to U.S-APWR plants in compliance with 10 CFR 50.55a and ASME Code NCA-1140(a)(2).
  - 10 CFR 50.55a (b)(4) allows the application of ASME Section III Code cases listed in the NRC Regulatory Guide (RG) 1.84, Revision 35 without prior NRC approval. However, Code Case N-782 is not listed for acceptance in RG1.84. The applicant was requested to provide justification for inclusion of the code case in DCD.
  - By letter April 26, 2011, the applicant indicated that the use of Code Case N-782 facilitates the use of the ASME Code edition and addenda included in the U.S.-APWR Design Certification. Therefore, it would provide an acceptable level of quality and safety. This is consistent with 10 CFR 50.55a(a)(3)(i) and acceptable.
- Therefore, this issue is resolved and RAI 575-4422, Question 5.02.01.02.07 is closed.

Technical Topics

Section 5.3.2 - P-T Limits, Charpy Upper-Shelf Energy, and PTS

U.S.NRC
United States Nuclear Regulatory Commission
Protecting People and the Environment

Pressure – Temperature Limits

- MHI addressed submittal of P-T limits by providing a Pressure-Temperature Limits Report (PTLR) (MUAP – 09016)
  - PTLR
    - Follows guidelines of GL 96-03
    - Contains bounding P-T limits and complete methodology
  - COL Information Item 5.3(1)
    - COL applicant will address the use of plant-specific P-T limits curves
- Open items associated with the review and approval of the PTLR
  - **OPEN ITEM 05.03.02-1, (RAI 258-2334, Question 05.03.02-01)**: Tracks the on-going review of the US-APWR PTLR
  - **OPEN ITEM 05.03.02-2, (RAI 694-5355, Question 05.03.02-11)**: Ensure that the applicant has considered the entire reactor vessel in the development of its P-T curves.

Technical Topics

Section 5.4.1.1 – Reactor Coolant Pump (RCP) Flywheel Integrity

U.S.NRC
United States Nuclear Regulatory Commission
Protecting People and the Environment

RCP flywheel analyzed to prevent fracture and possible missile:

- MHI provided
  - Material selection, fabrication techniques, preservice and inservice inspections and overspeed testing per NUREG-0800
  - Analysis (Per RG 1.14) (MUAP – 09017)
    - Critical speeds for ductile and non-ductile fracture
    - Fatigue crack growth
- **Open Item 05.04.01.01-2** (RAI 5663, Question 05.04.01.01-8):
  - Needs to provide critical crack size for fatigue and inspection capability

Technical Topics

Section 5.4.1.2 – Reactor Coolant Pumps

U.S.NRC
United States Nuclear Regulatory Commission
Protecting People and the Environment

Technical Topics – RCP:

- Pump Design
  - RCP is a vertical shaft, single-stage, mixed flow pump with diffuser
  - Loss of Seal Water Injection Event

    - CVCS supplies seal water

    - Increase in seal and bearing inlet temperatures and No. 1 seal leak rate

    - CCWS continues to provide flow to the thermal barrier heat exchanger which maintains safe operating temperature long enough for safe shutdown
  - Loss of Component Cooling Water Event

    - CCW supplies upper/lower bearing oil cooler, air cooler, and thermal barrier

    - CVCS seal injection flow continues to the RCP seals

    - Motor designed to withstand loss of CCW for 10 minutes
- **Open Item 5.4.01.02-01 (RAI 5718, Question 05.04.01.02-01)** – With respect to Loss of Seal Water Injection, provide a response to: (1) whether there is a MCR low-flow alarm; (2) How long can the RCP operate in this condition
- **Open Item 5.4.01.02-02 (RAI 5718, Question 05.04.01.02-02)**– With respect to Loss of Component Cooling Water, provide a response to: (1) Whether the loss of CCW includes the loss of cooling to CVCS (2) Whether the limiting factor is over heating of the motor or seals

Technical Topics

Section 5.4.7 – Residual Heat Removal

U.S.NRC
United States Nuclear Regulatory Commission
Protecting People and the Environment

Technical Topics – RHR:

- System Design
  - Configuration Similar to Current PWR Designs, except
    - Four independent trains – each train has 50% heat removal capability
  - Used during startup/shutdown and refueling operations
    - If needed, maintains RWSP below 120°F during normal operation
    - During shutdown and refueling RHR is placed in service below approximately 400 psig and 350°F
- Evaluated against NRC Bulletin 88-04, NRC Generic Letter 89-04 and BTP 5-4
- Evaluated against ISG DC/COL-ISG-019 – Gas Accumulation
- **Open Item 5.4.7-11 (RAI 464-3520, Question 05.04.07-11)** – Provide information to support that the RHR design complies with DC/COL-ISG-019 with respect to potential air ingestion and/or vortexing during refueling conditions

Technical Topics

Section 5.4.11 – Pressurizer Relief Tank

U.S.NRC
United States Nuclear Regulatory Commission
Protecting People and the Environment

Technical Topics – PRT:

- Configuration Similar to Current PWRs Designs
  - Designed to condense/cool steam discharge equivalent to 100% of the full-power pressurizer steam volume
- Used during design-basis events
  - To prevent over-pressurization of the RCS and pressurizer
  - Receives steam from pressurizer via SRVs and SDVs
  - Receives non-condensable gasses from HPV
- **Open Item 5.4.11-01 (RAI 5688, Question 05.04.11-01)** – Provide additional information to support that the PRT and rupture disks are designed for full vacuum to prevent PRT collapse (w/o nitrogen being blanket)
- **Open Item 5.4.11-02 (RAI 5688, Question 05.04.11-02)** – Provide additional information to support that the PRT rupture disks do not pose a missile threat with respect to design & location within containment
- **Open Item 5.4.11-03 (RAI 5688, Question 05.04.11-03)** – Provide additional information to support the Seismic Category I/ non-Seismic SSCs interface guideline (RG 1.29, C.3, Regulatory Position)

Technical Topics

Section 5.4.12 – RCS High-Point Vents

U.S.NRC
United States Nuclear Regulatory Commission
Protecting People and the Environment

Technical Topics – RCSHPV:

- Required by 10 CFR 50.34(f)(2)(vi) and TMI Action Plan Item II.B.1
  - Removes RCS non-condensable gases to maintain adequate core cooling (enhance natural circulation)
  - Vent paths: (1) reactor vessel head vent to PRT; (2) pressurizer SDVs to PRT; and (3) pressurizer DVs to containment vessel
- Standard Configuration Design
  - Reactor vessel head & SDVs have two parallel vent paths with two normally closed MOVs in series
  - DVs have one path with two MOVs in series
  - Note: Reactor vessel head, pressurizer and the steam generator U tubes – only high points that could accumulate non-condensable gases; however, individual U tubes not required to have HPV (10 CFR 50.46a)
- **Open Item 5.4.12-05 (RAI 48-840, Question 05.04.12-05)** – Provide procedures or propose DCD revisions that specifically address removal of non-condensable gases from the RCSHPV system (identify the procedure for each vent path)

ACRONYMS

U.S.NRC
United States Nuclear Regulatory Commission
Protecting People and the Environment

10 CFR – Title 10 of the Code of Federal Regulations
CCW – component cooling water
CVCS – chemical and volume control system
COL – combined license
DV – depressurization valve
FSAR – Final Safety Analysis Report
MCR – main control room
MOV – motor operated valve
PRT- pressurizer relief tank
PTLR – Pressure – Temperature Limits Report
PTS – pressurized thermal shock
PWR – pressurized water reactor
RAI – request for additional information
RCP – reactor coolant pump
RCPB – reactor coolant pressure boundary
RCS – reactor coolant system
RCSHPV – reactor coolant system high point vent
RG – Regulatory Guide
RHR – residual heat removal
RVHVS – reactor vessel head vent system
RWSP – refueling water storage pit
SDV – safety depressurization valve
SER – safety evaluation report
SRP – Standard Review Plan
SRV – safety relief valve