ENCLOSURE 3

CALCULATION RSOGENROGCDX00033320110002
"SEISMIC EVALUATION OF HESCO BASKETS"

TVA Calculation Package

Title Seismic Evaluation of HESCO Baskets

Location Description: *(Optional)*	**Total Pages:** *(including appendices & attachments)* 19

Calculation ID *(All parts required to form a unique ID)*:

Org Code	Location/ Plant Code	Branch Code	Alphanumeric Part = Discipline Code (1) + Type Code (1) + "X" + Unit Field (3) + Sys Code (3) + Year (4) + Sequence No. (4)
RSO	GEN	ROG	CDX00033320110002

NOTE: When referencing the calculation ID, include all parts without spaces or dashes between them.

Unit(s), Spill gate(s), or Voltages (PSO):	**Key Nouns (For CTS/CCRIS):**
Unit 0	Stability Analysis, Temporary,Modification, Seismic

Applicable Design Document(s):	**Rev**	**RIMS/EDMS Accession Number** *(Optional)*
None	R0	
	R	
UNID System(s):	R	
333	R	

	R0	R	R	R
DCN, PCN, NA	N/A			
Prepared: Sign→				
Print Name	Mark C. Lowe			
Checked: Sign→				
Print Name	J. Justin Long			
	These calculations contain unverified assumption(s) that must be verified later? ☐ Yes ☒ No These calculations contain special requirements and/or limiting conditions? ☐ Yes ☒ No			
Approved: Sign→				
Print Name	Kendal R. Lennon			
Approval Date	4/2/11			
	These calculations contain a design output attachment? ☐ Yes ☒ No			
Revision Applicability	☐ Entire calc	☒ Entire calc ☐ Selected pgs	☐ Entire calc ☐ Selected pgs	☐ Entire calc ☐ Selected pgs
	Computer output Microfiche generated? ☐ Yes ☒ No Number:			

Purpose of the Calculation: To evaluate the stability of Hesco Bastion Concertainers during a seismic event resulting in horizontal accelerations of 0.18g and vertical accelerations of 0.12g.

Abstract: Hesco Bastion Concertainers will be used to temporarily raise the elevation of the top of the dam while a permanent modification can be implemented. Several configurations of the Concertainers were evaluated for sliding and overturning stability during a seismic event. This calculation is applicable for the Concertainer flood wall system at FLH, CRH, TEH, and WBH.

☐ Electronically file and return calculation to Calculation Library.

☒ Electronically file and return calculation Mark Lowe Address: WT 9D-K

TVA Calculation Coversheet
CTS Input Form

Preparer	Preparer Login ID	Date
Mark C. Lowe	mclowe	4/14/2011
Checker	**Checker Login ID**	**Date**
J. Justin Long	jjlong	4/20/2011

Update Code: ☒ Add ☐ Change ☐ Delete ☐ Rename ☐ Supersede ☐ Duplicate ☐ Verify

The following section applies if a calculation is being renamed, superseded, or has a duplicate.

	Org Code	Plant	Branch	Number	Cur Rev	New Rev
Current Calc ID:						

The following section applies to all calculations.

Calc ID:	RSO	GEN	ROG	CDX00033320110002		0

Firm: *(TVA or Contractor)* _____

Cross-References

A/C/D	Xref Code	Type	Org Code	Plant	Branch	Number	Rev
A	P	DW	RSO	FLH	ROG	10W222-1	0
A	P	DW	RSO	FLH	ROG	10W222-2	0
A	P	DW	RSO	FLH	ROG	10W222-3	0
A	P	DW	RSO	CRH	ROG	10W222-1	0
A	P	DW	RSO	CRH	ROG	10W222-2	0
A	P	DW	RSO	TEH	ROG	10W222-1	0
A	P	DW	RSO	TEH	ROG	10W222-2	0
A	P	DW	RSO	WBH	ROG	10W222-1	0
A	S	CN	RSO	FLH	ROG	CDX00033320090003	0

TVA Calculation Record of Revision

Calculation Identifier: RSOGENROGCDX00033320110002

Title Seismic Evaluation of HESCO Baskets

Revision No.	Description of Revision
0	Initial Issue

TVA Computer File Storage Information Sheet

Calculation Identifier: RSOGENROGCDX00033320110002 **Rev.** 0 **Plant:** GEN

Subject: Seismic Evaluation of HESCO Baskets

Software Name: NA **Revision Level:** NA

Vendor Name: NA

Address: NA

Executable Files

☒ No TVA developed **executable files** were used in this calculation.

Comments:

☐ TVA developed **executable files** used in this calculation have been stored electronically and sufficient identifying information is provided below for each executable file. *(Any retrieved file requires re-verification of its contents before use.)*

Input Files

☒ Electronic storage of the **input files** for this calculation is not required.

Comments:

☐ **Input files** for this calculation have been stored electronically and sufficient identifying information is provided below for each input file. *(Any retrieved file requires re-verification of its contents before use.)*

TVA Calculation Table of Contents

Calculation Identifier: RSOGENROGCDX00033320110002 **Revision:** 0

Table of Contents

Section	Title	Page
1.0	Introduction and Purpose	6
2.0	References	6
3.0	Assumptions	6
4.0	Concertainer Weight	7
5.0	Stability Analysis	7
	5.1 Single 4-Foot Concertainer Flood Wall	9
	5.2 Single 3-Foot Concertainer Flood Wall	11
	5.3 Double Concertainer, 3-Foot Concertainer and 4-Foot Concertainer	13
	5.4 L-Shaped Concertainer Configuration	15
6.0	Summary and Conclusions	17
Att. 1	Vertical and Horizontal Seismic Accelerations	19

1.0 Introduction and Purpose

The HESCO Bastion Concertainers, hereinafter referred to as Concertainers, will be used as a flood wall to temporarily raise the elevation of Fort Loudoun, Tellico, Cherokee, and Watts Bar Dams to meet the impoundment requirements during the Probable Maximum Flood (PMF) event. Concertainers are a wire basket measuring 3-feet wide by 15-feet long by either 3 or 4-feet deep filled with sand or other fill material. Each 15-foot unit is divided into 5 equal compartments, each lined with a polypropylene nonwoven geotextile liner.

Concertainers were previously subjected to a hydrostatic loading to examine their performance for sliding and overturning stability as shown in Reference 2.5. **This calculation will evaluate the sliding and overturning stability of the Concertainers under a seismic loading only with water elevations below the top of the dam embankments and below the base of the Concertainers**. Therefore, hydrostatic and hydrodynamic effects were not included in this evaluation. Both typical Concertainer configurations and the atypical Concertainer configurations unique to Fort Loudoun Dam were evaluated. As shown in Attachment 1, the Concertainers are subjected to a horizontal acceleration of 0.18g and a vertical acceleration of 0.12g since the baskets are located at the top of the embankments.

2.0 References

2.1 "Engineering Evaluation of Hesco Barriers Performance in Fargo, ND 2009." Wenck Associates, Inc., May 2009 (Wenck File #2283-01).

2.2 "Flood-Fighting Structures Demonstration and Evaluation Program: Laboratory and Field Testing in Vicksburg, Mississippi." US Army Corps of Engineers: Engineering Research and Development Center, ERDC TR-07-3, July 2007.

2.3 "Engineering and Design: Stability Analysis of Concrete Structures." EM 1110-2-2100. United States Army Corps of Engineers. December 1, 2005.

2.4 Terzaghi, Karl et. al.,"Soil Mechanics in Engineering Practice," 3rd ed., John Wiley and Sons, New York, NY, 1996.

2.5 TVA Calculation "PMF Temporary Modification Analysis." Fort Loudoun. Calculation Identifier RSOFLHROGCDX0003320090003.

3.0 Assumptions

There are no unverified assumptions.

4.0 Concertainer Weight

The Concertainer units bulge when they are filled and properly compacted. The deformed shape of the Concertainer unit allows the unit to hold more weight than in its square shape. Therefore, the additional weight per Concertainer is computed below based on a single 3-foot square unit. Since the Concertianers will be in a continuous line, only one or two sides of the unit will be able to bulge depending on the configuration. For the purposes of increasing the weight, the deformed shape is idealized as a circle with a circumference equivalent to the perimeter of the undeformed unit. The idealized shape will then be compared to the test data provide in Ref. 2.1.

Length of Unit Face, $L_{face} := 3ft$

Perimeter of Undeformed Unit, $P_{undeformed} := 4 \cdot L_{face}$ $\quad P_{undeformed} = 12\,ft$

Area of Undeformed Unit, $A_{undeformed} := L_{face}^2$ $\quad A_{undeformed} = 9\,ft^2$

Radius of Idealized Shape, $r_{idealized} := \dfrac{P_{undeformed}}{2 \cdot \pi}$ $\quad r_{idealized} = 1.91\,ft$

Area of idealized Shape, $A_{idealized} := \pi \cdot r_{idealized}^2$ $\quad A_{idealized} = 11.459\,ft^2$

Volume Increase Factor, $F_{volume} := \dfrac{A_{idealized}}{A_{undeformed}}$ $\quad F_{volume} = 1.273$

Therefore, the volume of the 3' x 3' x 4' unit tested in Ref. 2.1 would be 1.70 CY. Based on the data included in Table 4 of Ref. 2.1, the average volume of the unit was 1.78 CY. Therefore, the volume increase factor is slightly conservative for the purposes of this stability analysis. Since only one or two faces of the unit are able to deform in the flood wall, the volume increase will be evenly distributed to each face of the unit.

Volume Increase Factor per Face, $f_{volume} := \dfrac{F_{volume} - 1.0}{4}$ $\quad f_{volume} = 0.068$

5.0 Stability Analysis

The minimum factor-of-safety for sliding stability will be calculated for several Concertainer configurations in accordance with USACE EM 1110-2-2100 and EM 1110-2-2200. The analyses will be performed for a unit length of the flood wall and the Concertainers will be assumed to act as a rigid bodies.

The fill material weight and friction coefficients used in the analyses are based on the data collected during Wenck Associates, Inc. field testing and published values.

<u>Design Input</u>

Unit Weight of Water, $\gamma_w := 62.4pcf$

Concertainer Width, $W := 3ft$

Concertainer Height, $H_4 := 4ft$ or $H_3 := 3ft$

Unit Weight of Lightly Compacted Fill Material, $\gamma_{fill_L} := 102pcf$ (Ref. 2.1, Table 4, Compacted Sand)

Unit Weight of Dry Dense Uniform Sand, $\gamma_{Sand_dry} := 109.43pcf$ (Ref. 2.4, Table 6.3)

Unit Weight of Saturated Dense Uniform Sand, $\gamma_{Sand_sat} := 130.43pcf$ (Ref. 2.4, Table 6.3)

Unit Weight of Heavily Compacted Fill Material, $\gamma_{fill_H} := \frac{\gamma_{Sand_dry} + \gamma_{Sand_sat}}{2}$

$\gamma_{fill_H} = 119.93\,pcf$

(See Moisture-Density Relationships for Sand Utilized in the Temporary Dams Modification Project in Attachment 7 of Ref. 2.5)

Coefficients of Friction,

Concertainer on Grass-Muddy/Saturated, $\mu_{grass} := 0.65$ (Ref. 2.1, Table 4)

Concertainer on PCC Street, $\mu_{PCC} := 0.57$ (Ref. 2.1, Table 4)

Uniform Concrete Slab Thickness on Earth, $\mu_{slab} := 0.6$ (Ref. 2.2, Section 8.8)

Minimum Sliding Factor of Safety, $FS_{min} := 1.1$ (Ref. 2.3, Table 3-2, Extreme Condition)

5.1 Single 4-Foot Concertainer Flood Wall

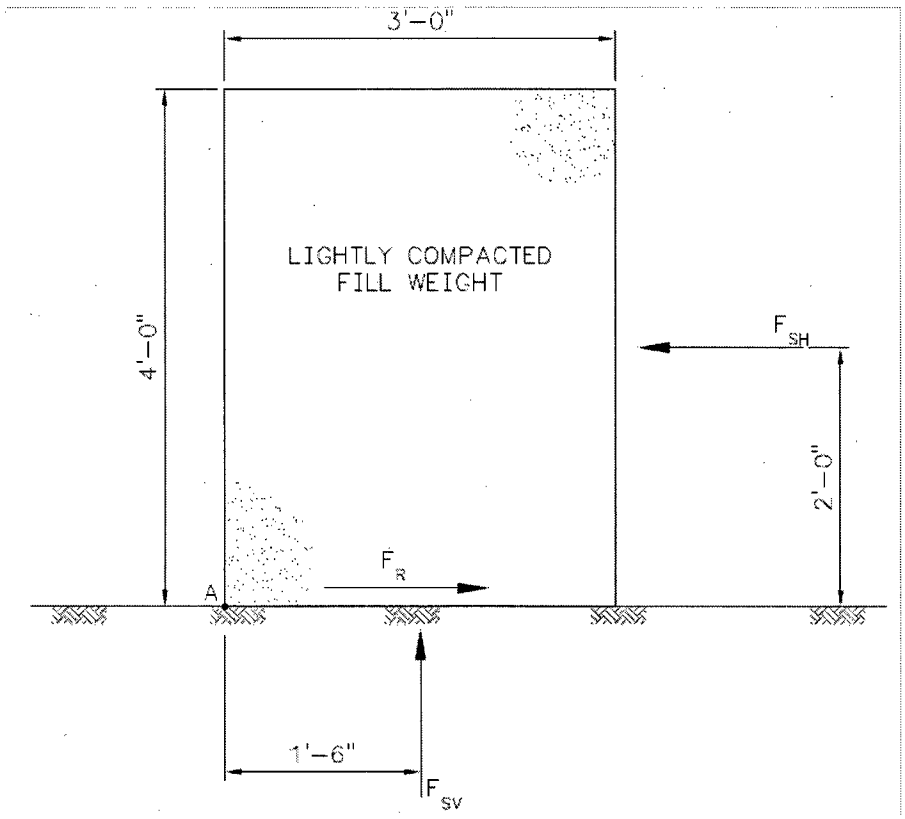

5.1.1 Sliding Stability

Concertainer Weight, $F_C := W \cdot H_4 \cdot \gamma_{fill_L} \cdot (2 \cdot f_{volume} + 1.0)$ $F_C = 1391.223\,plf$

Vertical Seismic, $F_{SV} := F_C \cdot 0.12$ $F_{SV} = 166.947\,plf$

Horizontal Seismic, $F_{SH} := F_C \cdot 0.18$ $F_{SH} = 250.42\,plf$

Normal Force, $F_N := F_C - F_{SV}$ $F_N = 1224.276\,plf$

Resisting Force on Grass, $F_{R_grass} := \mu_{grass} \cdot F_N$ $F_{R_grass} = 795.779\,plf$

Resisting Force on Pavement, $F_{R_PCC} := \mu_{PCC} \cdot F_N$ $F_{R_PCC} = 697.837\,plf$

Factor of Safety on Grass, $FS_{grass} := \frac{F_{R_grass}}{F_{SH}}$ $\boxed{FS_{grass} = 3.178}$

Factor of Safety on Pavement, $FS_{PCC} := \frac{F_{R_PCC}}{F_{SH}}$ $\boxed{FS_{PCC} = 2.787}$

5.1.2 Overturning Stability

Compute the location of the resultant force under the Concertainer considering the Concertainer installed without any unit tilt loaded with the full horizontal and vertical accelerations. This analysis assumes that the unit acts as a rigid body.

Overturning Moment About Point A, $M_o := F_{SH} \cdot \frac{H_4}{2}$ $\quad M_o = 500.84 \frac{lbf \cdot ft}{ft}$

Resisting Moment About Point A, $M_R := F_N \cdot \frac{W}{2}$ $\quad M_R = 1836.414 \frac{lbf \cdot ft}{ft}$

Overturning Factor of Safety, $FS_{overturn} := \frac{M_R}{M_o}$ $\quad \boxed{FS_{overturn} = 3.667}$

Distance of Resultant from point A, $x := \frac{M_R - M_o}{F_N}$ $\quad x = 1.091\,ft$ Resultant within base

5.2 Single 3-Foot Concertainer Flood Wall

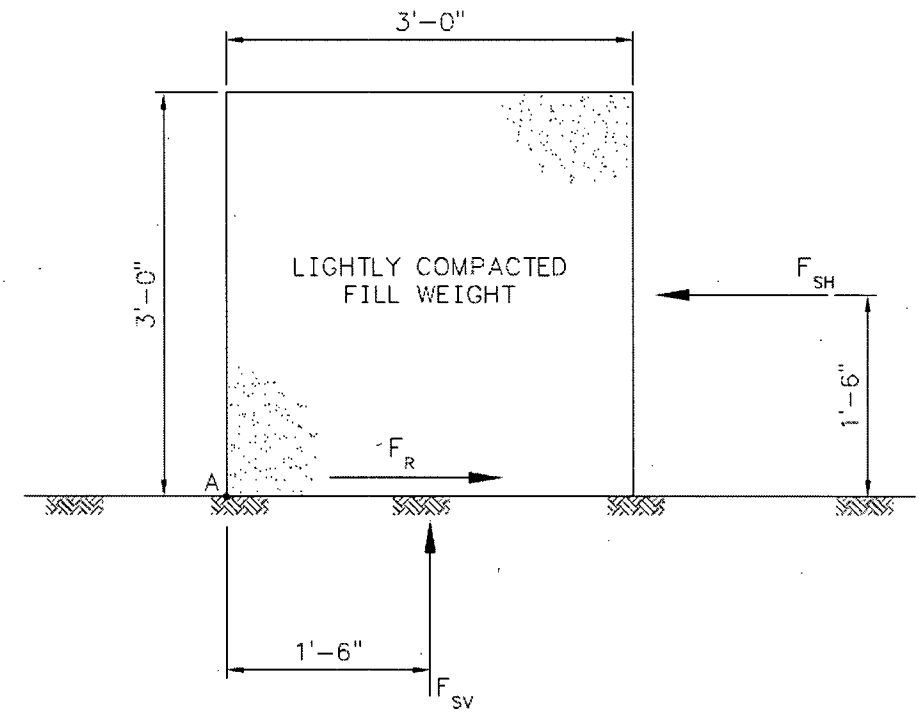

5.2.1 Sliding Stability

Concertainer Weight, $F_C := W \cdot H_3 \cdot \gamma_{fill_L} \cdot (2 \cdot f_{volume} + 1.0)$ $F_C = 1043.417\,plf$

Vertical Seismic, $F_{SV} := F_C \cdot 0.12$ $F_{SV} = 125.21\,plf$

Horizontal Seismic, $F_{SH} := F_C \cdot 0.18$ $F_{SH} = 187.815\,plf$

Normal Force, $F_N := F_C - F_{SV}$ $F_N = 918.207\,plf$

Resisting Force on Grass, $F_{R_grass} := \mu_{grass} \cdot F_N$ $F_{R_grass} = 596.834\,plf$

Resisting Force on Pavement, $F_{R_PCC} := \mu_{PCC} \cdot F_N$ $F_{R_PCC} = 523.378\,plf$

Factor of Safety on Grass, $FS_{grass} := \frac{F_{R_grass}}{F_{SH}}$ $\boxed{FS_{grass} = 3.178}$

Factor of Safety on Pavement, $FS_{PCC} := \frac{F_{R_PCC}}{F_{SH}}$ $\boxed{FS_{PCC} = 2.787}$

5.2.2 Overturning Stability

Compute the location of the resultant force under the Concertainer considering the Concertainer installed without any unit tilt loaded with the full horizontal and vertical accelerations. This analysis assumes that the unit acts as a rigid body.

Overturning Moment About Point A, $M_o := F_{SH} \cdot \frac{H_3}{2}$ $\quad M_o = 281.723 \frac{lbf \cdot ft}{ft}$

Resisting Moment About Point A, $M_R := F_N \cdot \frac{W}{2}$ $\quad M_R = 1377.31 \frac{lbf \cdot ft}{ft}$

Distance of Resultant from point A, $x := \frac{M_R - M_o}{F_N}$ $\quad x = 1.193\,ft$ Resultant within base

Overturning Factor of Safety, $FS_{overturn} := \frac{M_R}{M_o}$ $\quad \boxed{FS_{overturn} = 4.889}$

5.3 Double Concertainer, 3-Foot Concertainer and 4-Foot Concertainer

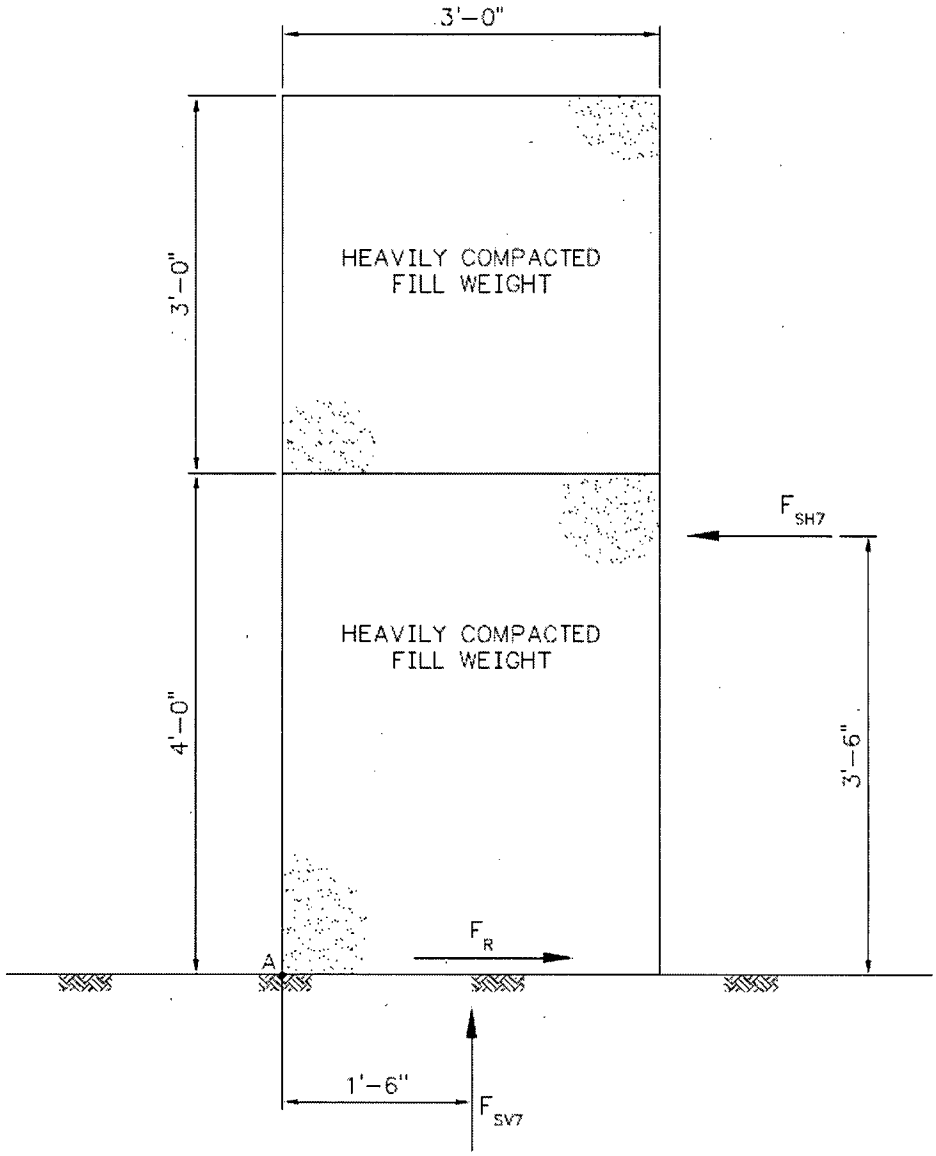

5.3.1 Sliding Stability

Concertainer Weight 7 foot combined basket, $F_{C7} := W \cdot (H_4 + H_3) \cdot \gamma_{fill_H} \cdot (f_{volume} + 1.0)$

$F_{C7} = 2690.57\,plf$

Vertical Seismic 7 ft basket, $F_{VS7} := F_{C7} \cdot 0.12$ $F_{VS7} = 322.868\,plf$

Horizontal Seismic 7 ft basket, $F_{HS7} := F_{C7} \cdot 0.18$ $F_{HS7} = 484.303\,plf$

Normal Force, $F_N := F_{C7} - F_{VS7}$ $F_N = 2367.702\,plf$

Resisting Force on Grass, $F_{R_grass} := \mu_{grass} \cdot F_N$ $F_{R_grass} = 1539.006\,plf$

Resisting Force on Pavement, $F_{R_PCC} := \mu_{PCC} \cdot F_N$ $F_{R_PCC} = 1349.59\,plf$

Factor of Safety on Grass, $FS_{grass} := \frac{F_{R_grass}}{F_{HS7}}$ $\boxed{FS_{grass} = 3.178}$

Factor of Safety on Pavement, $FS_{PCC} := \frac{F_{R_PCC}}{F_{HS7}}$ $\boxed{FS_{PCC} = 2.787}$

5.3.2 Overturning Stability

Compute the location of the resultant force under the Concertainer considering the Concertainer installed without any unit tilt loaded with the full horizontal and vertical accelerations. This analysis assumes that the unit acts as a rigid body.

Overturning Moment About Point A, $M_o := F_{HS7} \cdot 3.5ft$ $M_o = 1695.059 \frac{lbf \cdot ft}{ft}$

Resisting Moment About Point A, $M_R := F_N \cdot \frac{W}{2}$ $M_R = 3551.553 \frac{lbf \cdot ft}{ft}$

Distance of Resultant from point A, $x := \frac{M_R - M_o}{F_N}$ $x = 0.784\,ft$ Resultant within base

Overturning Factor of Safety, $FS_{overturn} := \frac{M_R}{M_o}$ $\boxed{FS_{overturn} = 2.095}$

5.4 L-Shaped Concertainer Configuration

The L-shaped double stacked Concertainer configuration shown below is utilized at Fort Loudoun underneath the US321 bridge.

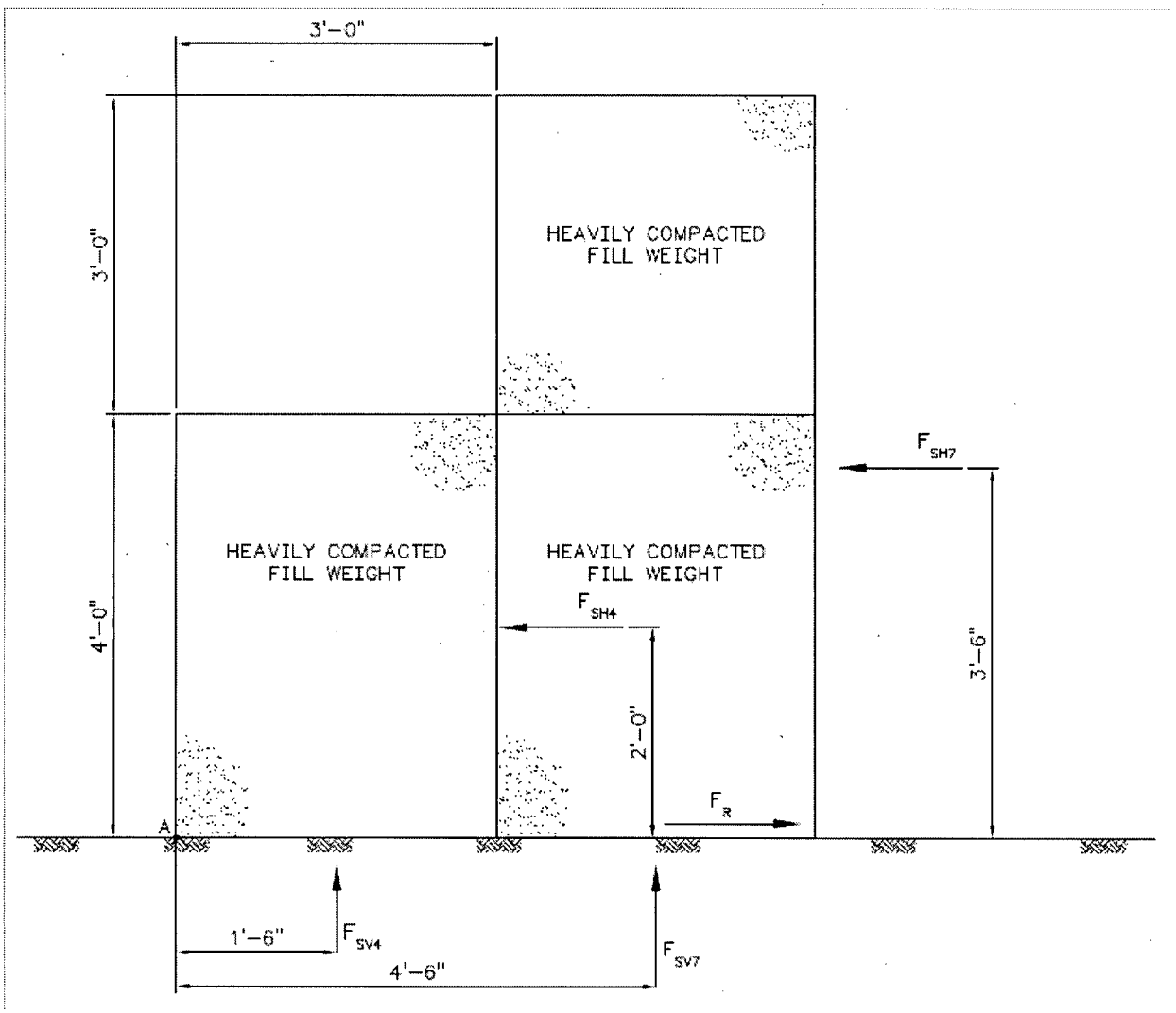

5.4.1 Sliding Stability

Concertainer Weight Single 4 foot basket, $F_{C4} := W \cdot H_4 \cdot \gamma_{fill_H} \cdot (f_{volume} + 1.0)$

$F_{C4} = 1537.469\,plf$

Concertainer Weight 7 foot combined basket,

$F_{C7} := W \cdot \gamma_{fill_H} \cdot [(H_4) \cdot (f_{volume} + 1.0) + (H_3) \cdot (2 \cdot f_{volume} + 1.0)]$

$F_{C7} = 2764.302\,plf$

Concertainer Weight total, $F_C := F_{C4} + F_{C7}$

$F_C = 4301.771\,plf$

Vertical Seismic 4 ft basket, $F_{VS4} := F_{C4} \cdot 0.12$

$F_{VS4} = 184.496\,plf$

Vertical Seismic 7 ft basket, $F_{VS7} := F_{C7} \cdot 0.12$

$F_{VS7} = 331.716\,plf$

Horizontal Seismic 4 ft basket, $F_{HS4} := F_{C4} \cdot 0.18$

$F_{HS4} = 276.744\,plf$

Horizontal Seismic 7 ft basket, $F_{HS7} := F_{C7} \cdot 0.18$

$F_{HS7} = 497.574\,plf$

Width of Base, $W_{base} := 2W$ $W_{base} = 6\,ft$

Resisting Force on Grass, $F_{R_grass} := \mu_{grass} \cdot (F_C - F_{VS4} - F_{VS7})$ $F_{R_grass} = 2460.613\,plf$

Resisting Force on Pavement, $F_{R_PCC} := \mu_{PCC} \cdot (F_C - F_{VS4} - F_{VS7})$ $F_{R_PCC} = 2157.768\,plf$

Factor of Safety on Grass, $FS_{grass} := \dfrac{F_{R_grass}}{F_{HS4} + F_{HS7}}$ $\boxed{FS_{grass} = 3.178}$

Factor of Safety on Pavement, $FS_{PCC} := \dfrac{F_{R_PCC}}{F_{HS4} + F_{HS7}}$ $\boxed{FS_{PCC} = 2.787}$

5.4.2 Overturning Stability

Compute the location of the resultant force under the Concertainer considering the Concertainer installed without any unit tilt loaded with the full horizontal and vertical accelerations. This analysis assumes that the unit acts as a rigid body.

Overturning Moment About Point A, $M_o := F_{HS4} \cdot 2ft + F_{HS7} \cdot 3.5ft$ $M_o = 2294.999 \dfrac{lbf \cdot ft}{ft}$

Resisting Moment About Point A, $M_R := (F_{C4} - F_{VS4}) \cdot 1.5ft + (F_{C7} - F_{VS7}) \cdot 4.5ft$

$M_R = 12976.095 \dfrac{lbf \cdot ft}{ft}$

Overturning Factor of Safety, $FS_{overturn} := \dfrac{M_R}{M_o}$ $\boxed{FS_{overturn} = 5.654}$

Distance of Resultant from point A, $x := \dfrac{M_R - M_o}{F_C - F_{VS4} - F_{VS7}}$ $x = 2.822\,ft$ Resultant within base.

6.0 Summary and Conclusions

Evaluation of the four configurations indicates that the baskets are stable when subjected to a seismic event with a horizontal acceleration of 0.18 and a vertical acceleration of 0.12. The sliding factor of safety for sliding was 3.178 for Concertainers installed on grass and 2.787 for Concertainers installed on pavement which is higher then the required Factor of Safety of 1.1. Also, the overturning factor of safety ranged from a minimum of 2.095 to a maximum of 5.61 which is higher then the required Factor of Safety of 1.0.

Attachment 1

Vertical and Horizontal Seismic Accelerations

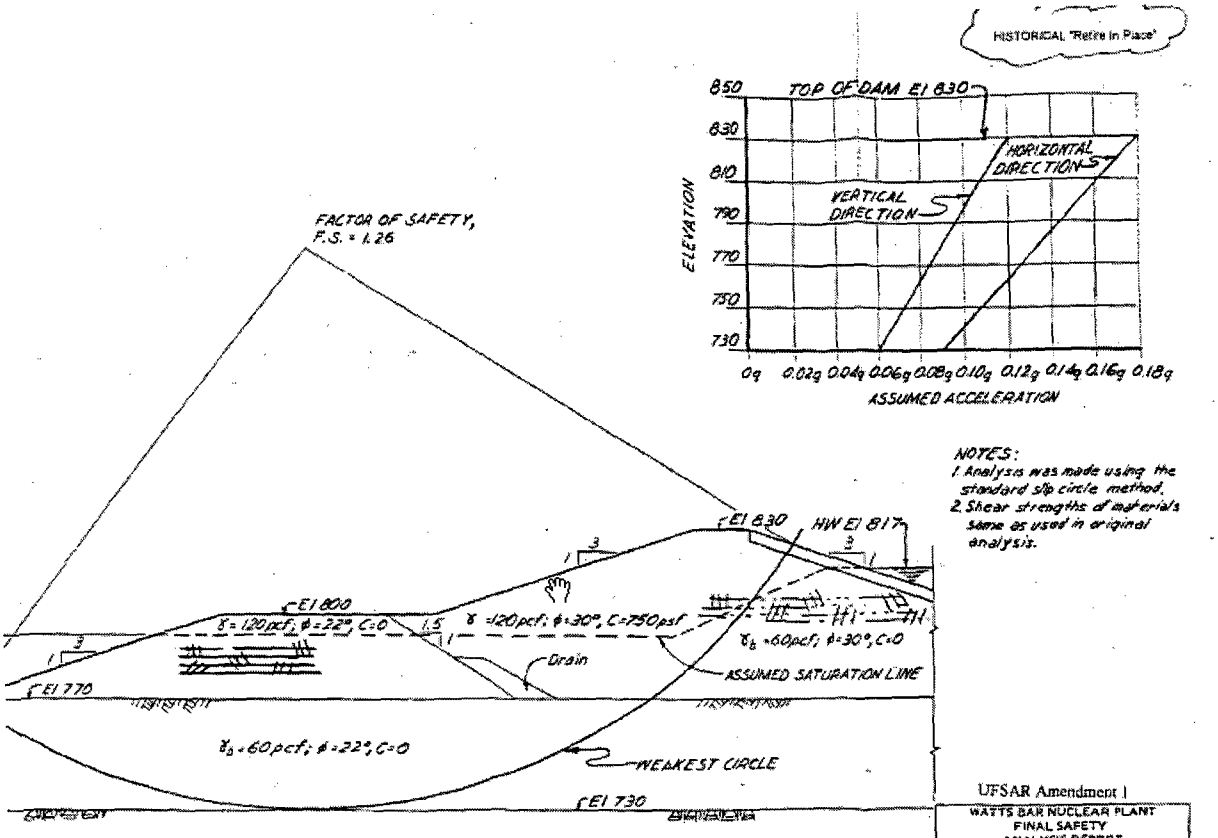

UFSAR Amendment 1
WATTS BAR NUCLEAR PLANT
FINAL SAFETY
ANALYSIS REPORT

ENGANKMENT
RESULTS OF ANALYSIS FOR
OPERATING BASIS EARTHQUAKE
Fort Loudoun Dam
Figure 2.4-72

ENCLOSURE 4

SUMMARY OF PROBLEM EVALUATION REPORT 154477

The hydrology issues at Watts Bar Nuclear Plant are being tracked through a single Problem Evaluation Report (PER), PER 154477. PER 154477 was initially written to address the assumptions made on Tellico Dam with respect to stability during the Operating Basis Earthquake. As other issues were identified during the hydrology analysis input reconstitution, additional PERs were written to address the specific issue and to address operability and functionality of that issue. As these additional PERs were closed, they were added to PER 154477 as the single tracking document. Currently, the open corrective actions remaining for PER 154477 are for documentation corrections.

Upon completion of the hydrology analysis for probable maximum flood (PMF), one of the additional PERs, PER 211722, was written to address the higher than original licensed PMF level (0.7 feet increase). Equipment required for flood mode was evaluated for impact of the increased PMF level. The review concluded that all equipment was adequate for the PMF event with margin except for the Unit 1 Thermal Barrier Booster (TBB) Pump motors. The base of these motors is located within 1/4" of the revised design basis flood level inside the structures. The Unit 2 pumps are at the same elevation as the Unit 1 pumps. Since these components have reduced margin, a Unit 1 temporary alteration control measure was implemented to provide protection around the equipment through the use of a barrier. This protection is implemented as part of the flood mode preparations as described in Abnormal Operating procedures. The barrier is not required to deem the pump motors functional but is recommended to provide assurance of additional margin. Unit 2 is implementing a permanent design change to protect the pump motors.

To date, the only issue identified in the additional PERs is protection of the TBB pump motors as described above.