Wire System Aging Condition Monitoring and Fault Detection using Line Resonance Analysis

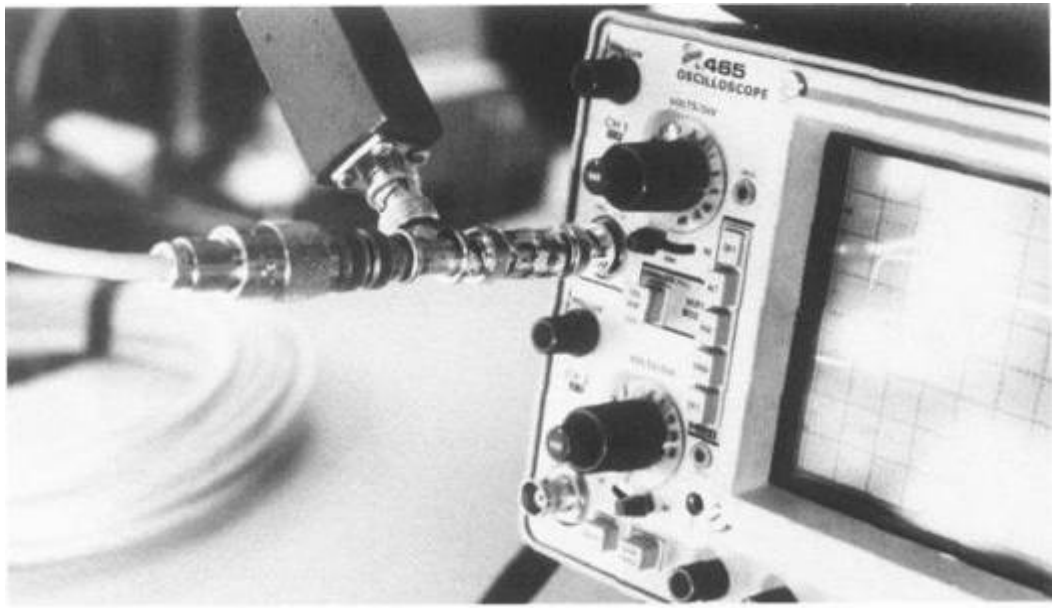

Paolo F. Fantoni
OECD Halden Reactor Project
Institutt for energiteknikk
Halden, Norway
Paolo.Fantoni@hrp.no

Condition Monitoring of Electrical Cables HRP project objectives

- Development of new, effective, in situ condition monitoring techniques for installed wire systems
  - *that can be used to determine the current condition of the wire system and detect incipient faults before damage can occur.*
- Prediction of the remaining useful life, including the establishment of acceptance criteria and correlation of mechanical wire system properties to electrical properties
  - *to better understand the significance of reaching the limits of mechanical properties for aged insulating materials.*

HRP Project on Cable Aging
Phase 1 (2003 – 2004)

- Participation to the IAGE Task Group on Wire System Aging (NEA). Final report released in August 2004 (**NEA/CSNI/R(2004)12**).
- State-of-the-art report (**HWR-746**) released April 2004 (Halden Reactor Project Report).
- Aged samples collected from HBWR reactor.
- Hardware for high frequency test equipment acquired and already available at HRP.
- **LIRA** modelling in progress.

HRP Project on Cable Aging
The LIne Resonance Analysis (LIRA) method

- Based on narrow band frequency domain analysis of high frequency resonance effects of unmatched transmission lines.
- Sensitive to small changes of wire electric parameters, mainly the insulation permittivity, that are a significant condition indicator of the cable state (thermal and radiation aging, humidity, insulation defects)
- Possibility to detect and localize meaningful property changes, in spite of different structures (insulation type, geometry) and not-aging related effects.

LIRA is based on transmission lines theory

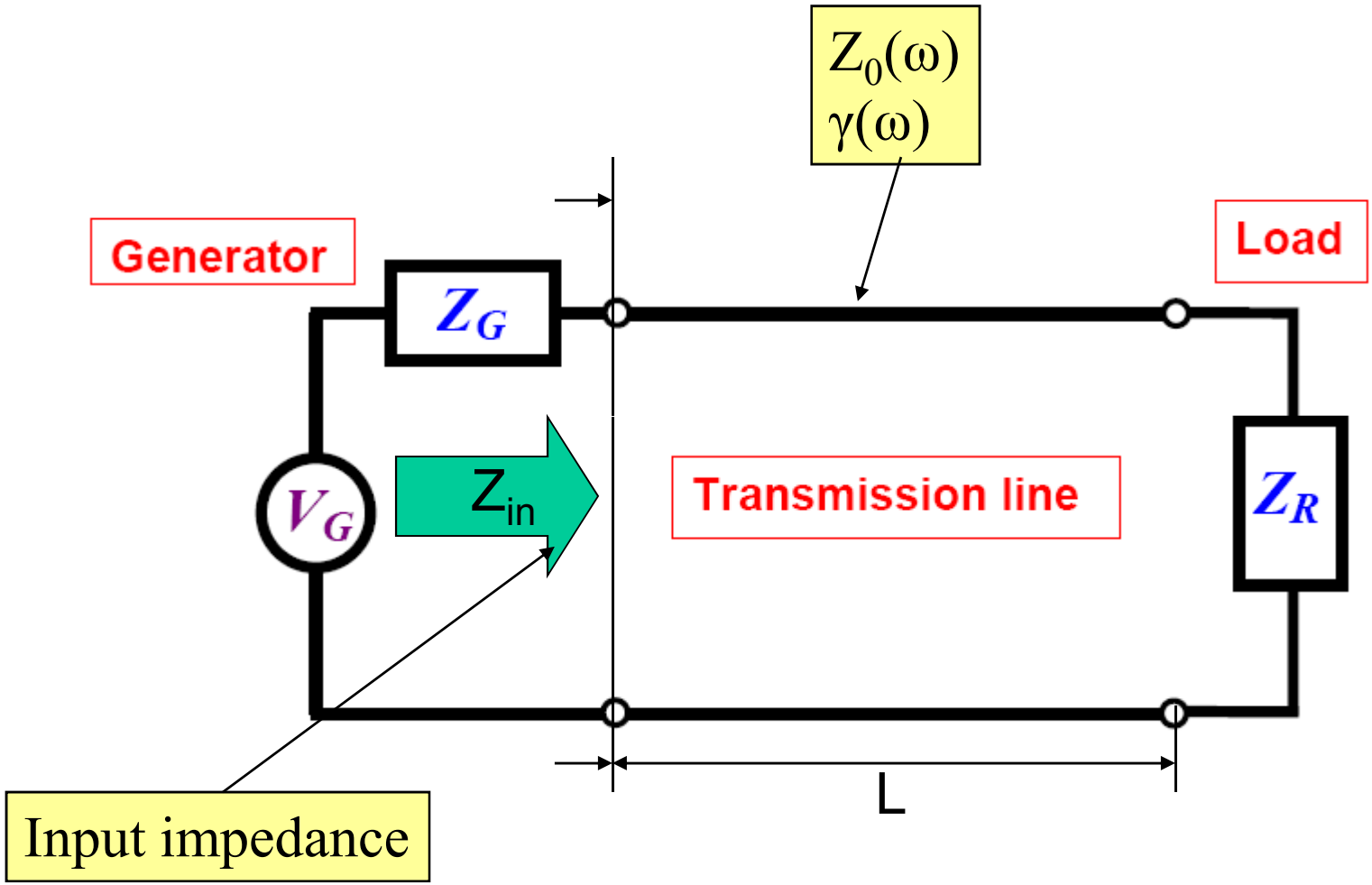

Wire system equivalent circuit

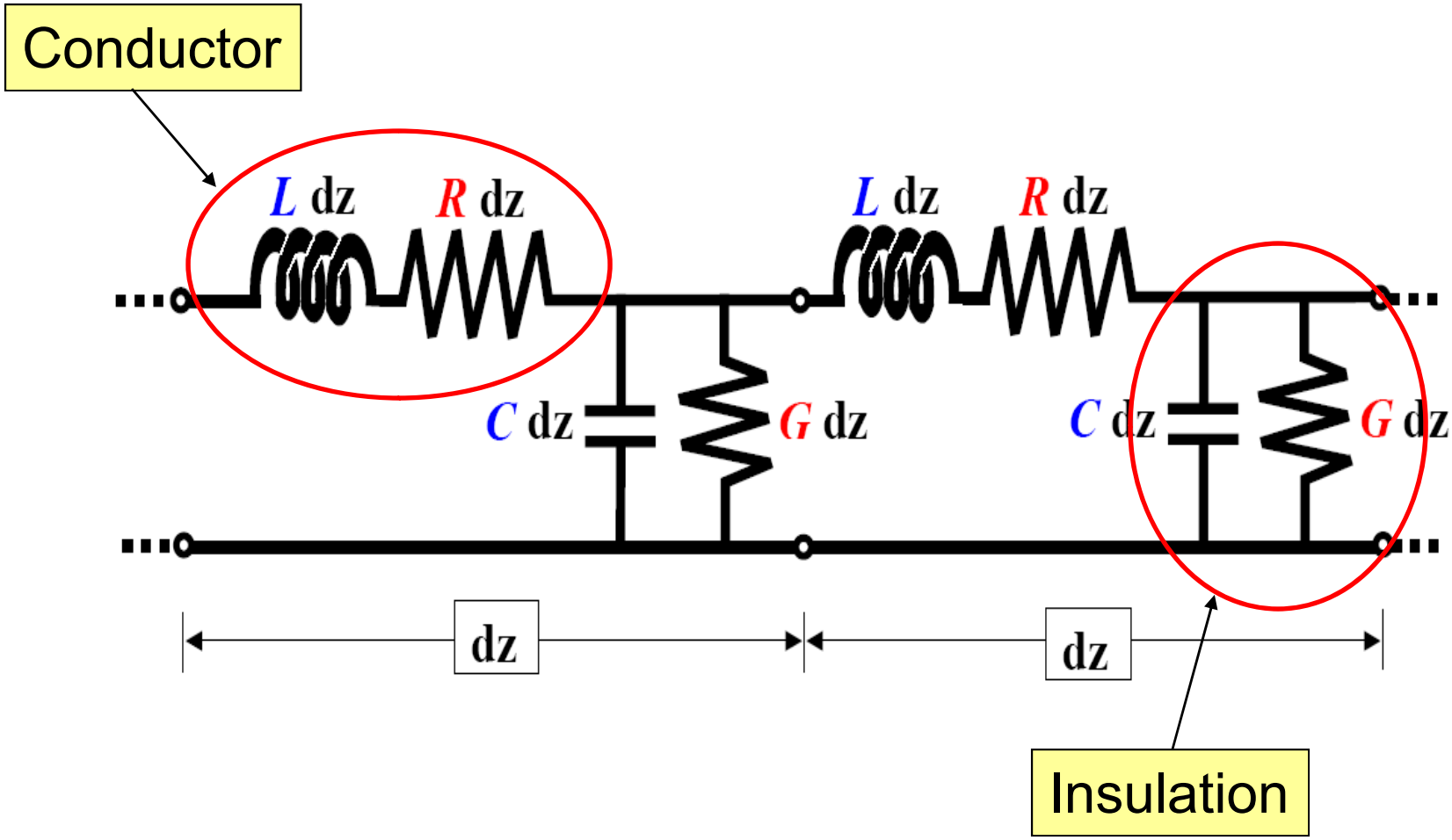

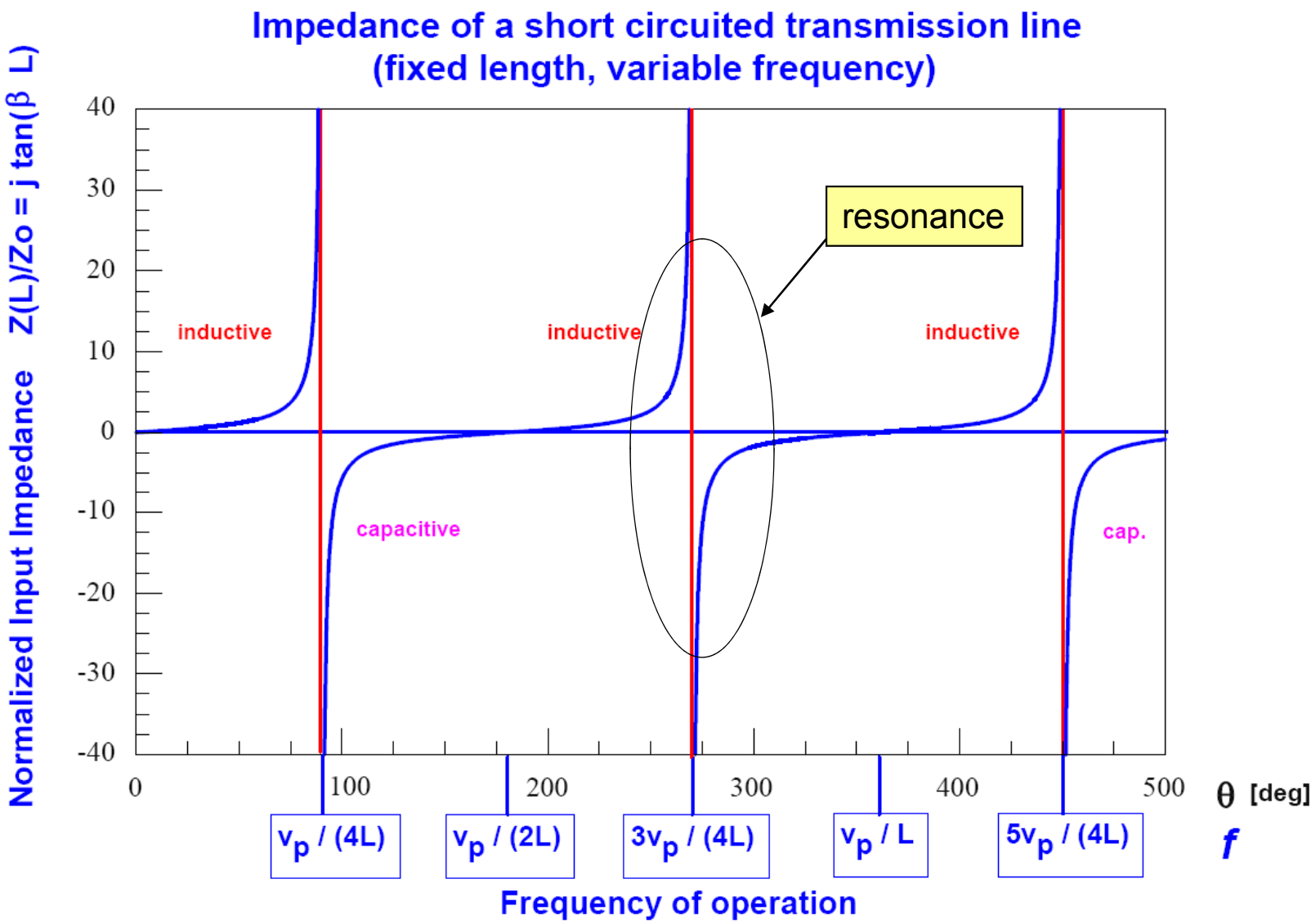
Impedance of a short circuited transmission line
(fixed length, variable frequency)
Normalized Input Impedance Z(L)/Zo = j tan(β L)
40
30
20
10
0
-10
-20
-30
-40
0
100
200
300
400
500
θ [deg]
f
inductive
inductive
inductive
capacitive
cap.
resonance
vp / (4L)
vp / (2L)
3vp / (4L)
vp / L
5vp / (4L)
Frequency of operation

Wavelength vs. Frequency

$$\lambda = \frac{v}{f}$$

Wire length L is electrically significant when L ≈ λ or more
If L = 10m, f ≥ 25 MHz
If L=500km, f = 2 KHz

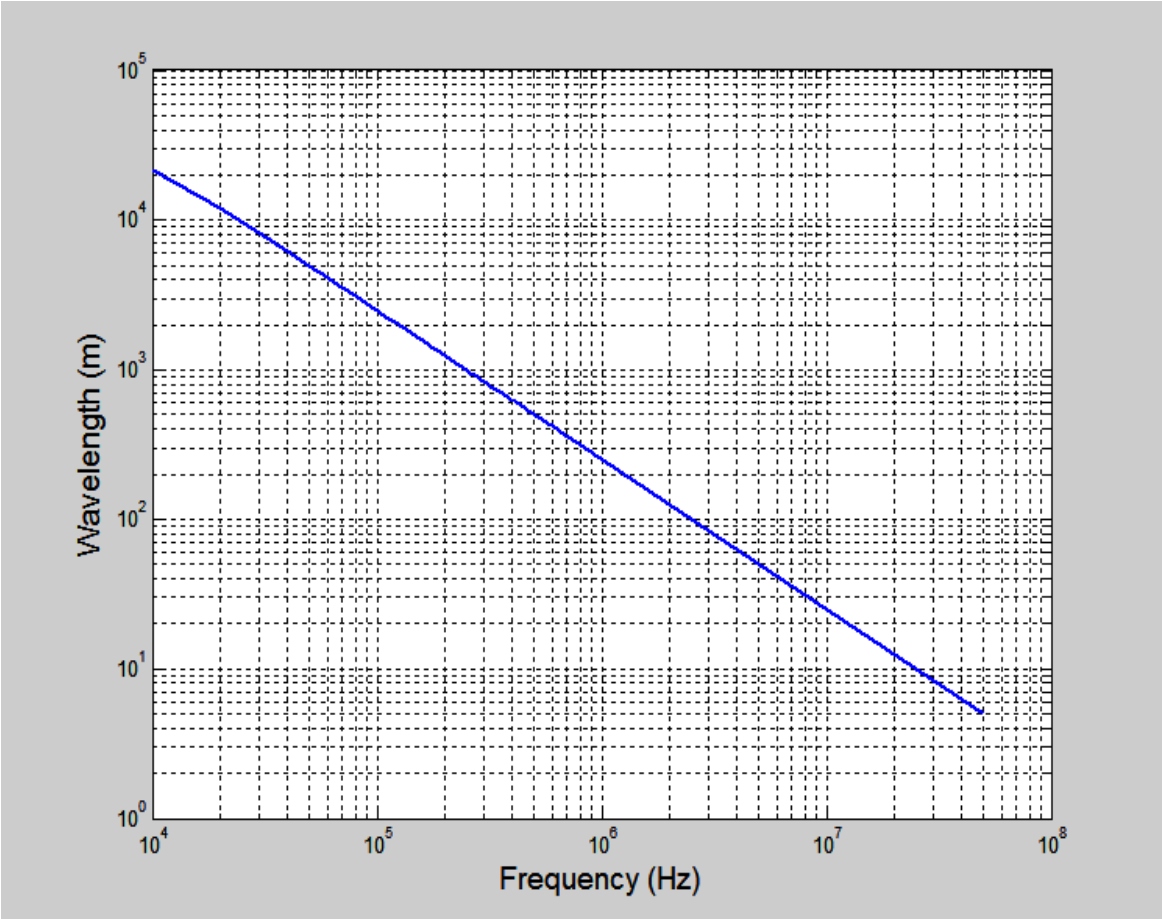

Resonance Analysis of loaded cables (HRP-TF01 setup)

Phase shift of the cable input impedance is 0 at any resonance frequency, with the highest derivative.
Resonance frequency is a function of cable length and cable properties

Cable peak impedance values are a function of the load and the attenuation coefficient.

Best performance at lower frequencies (< 10 MHz), because of the limited bandwidth of the OPA and phase distortion

Z_R=150

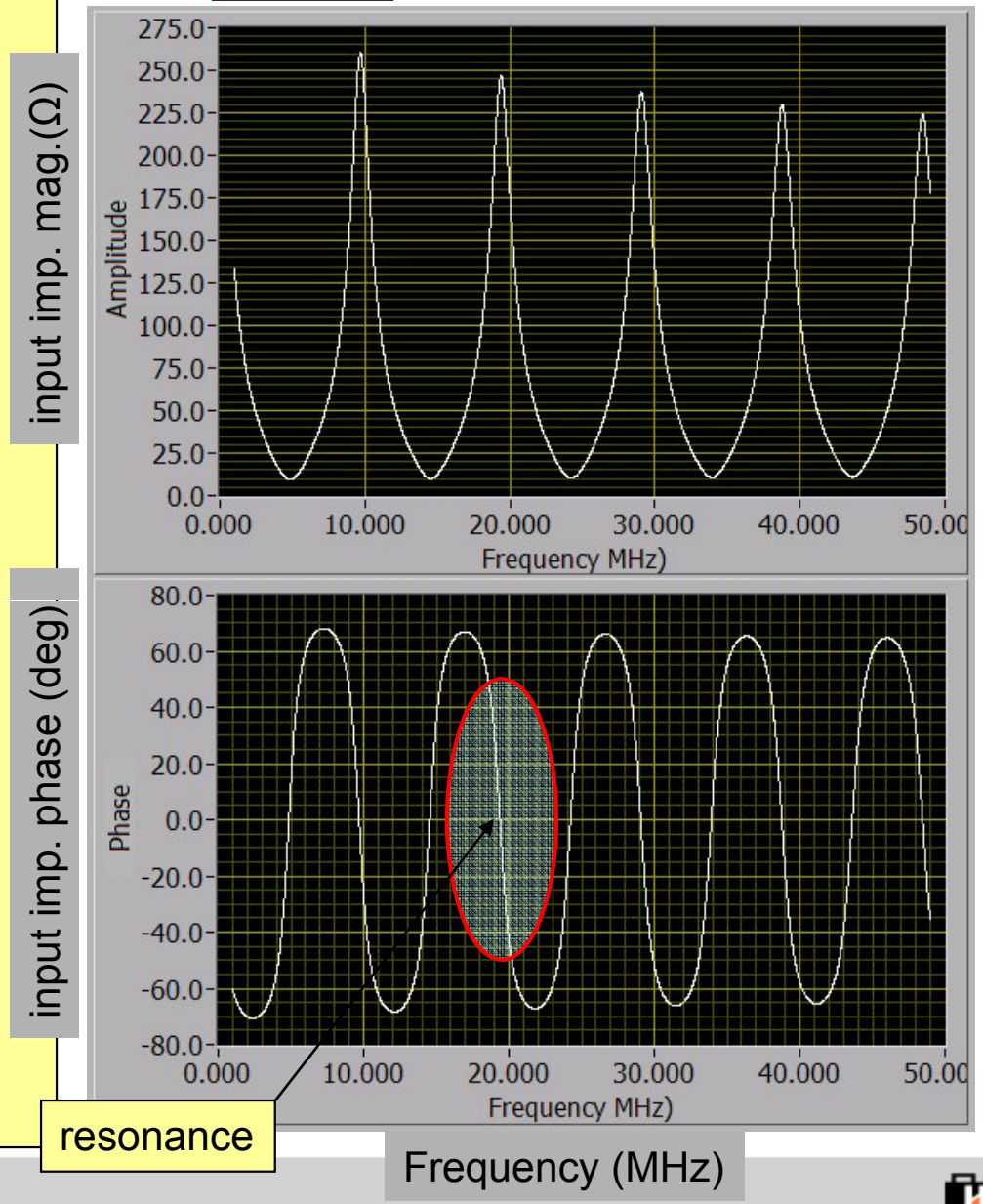

Resonance Analysis of loaded cables (both setup)

In operation mode, 2 sinusoidal signals at 2 consecutive resonance frequencies are fed into the cables.
The cumulative phase shift of the input impedance, due to the permittivity change in the insulation, is used as the condition indicator (CI) for aging and small defects.
Amplitude change is used to account for larger effects.

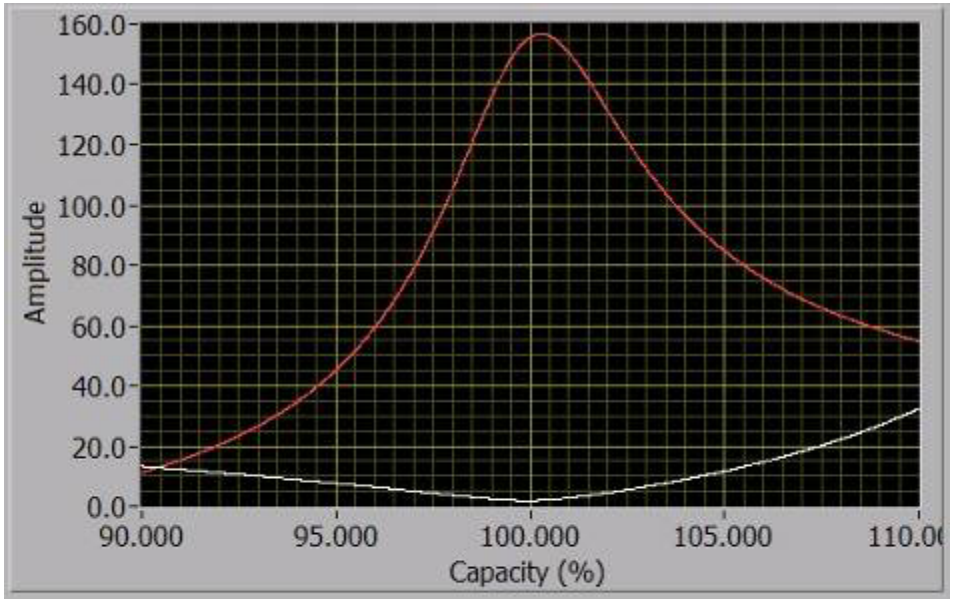

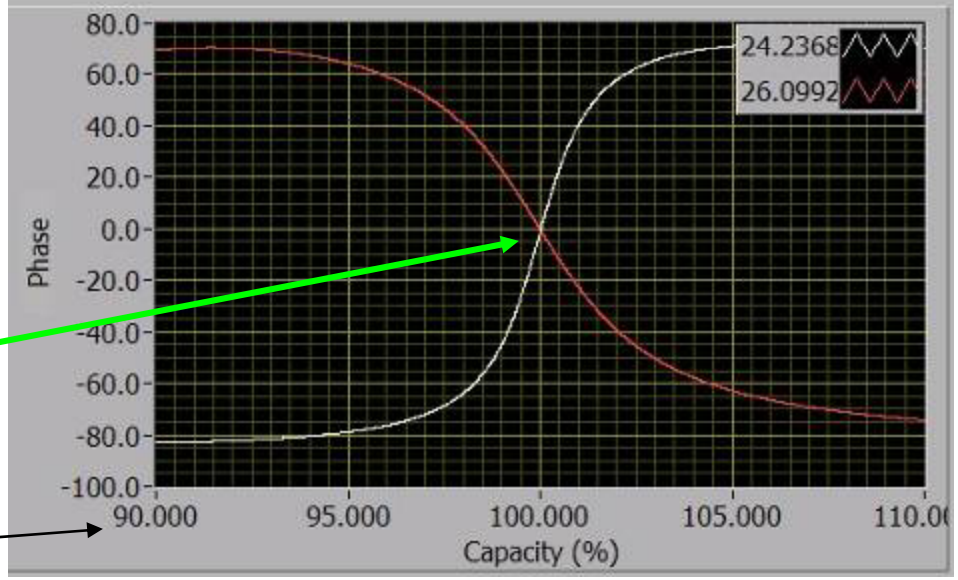

Operation point at resonance
24.23 and 26.09 MHz in this example

Permittivity change sensitivity: 0.1% of initial value

Auto-Balancing Bridge setup for impedance measurement (HRP-TF01)

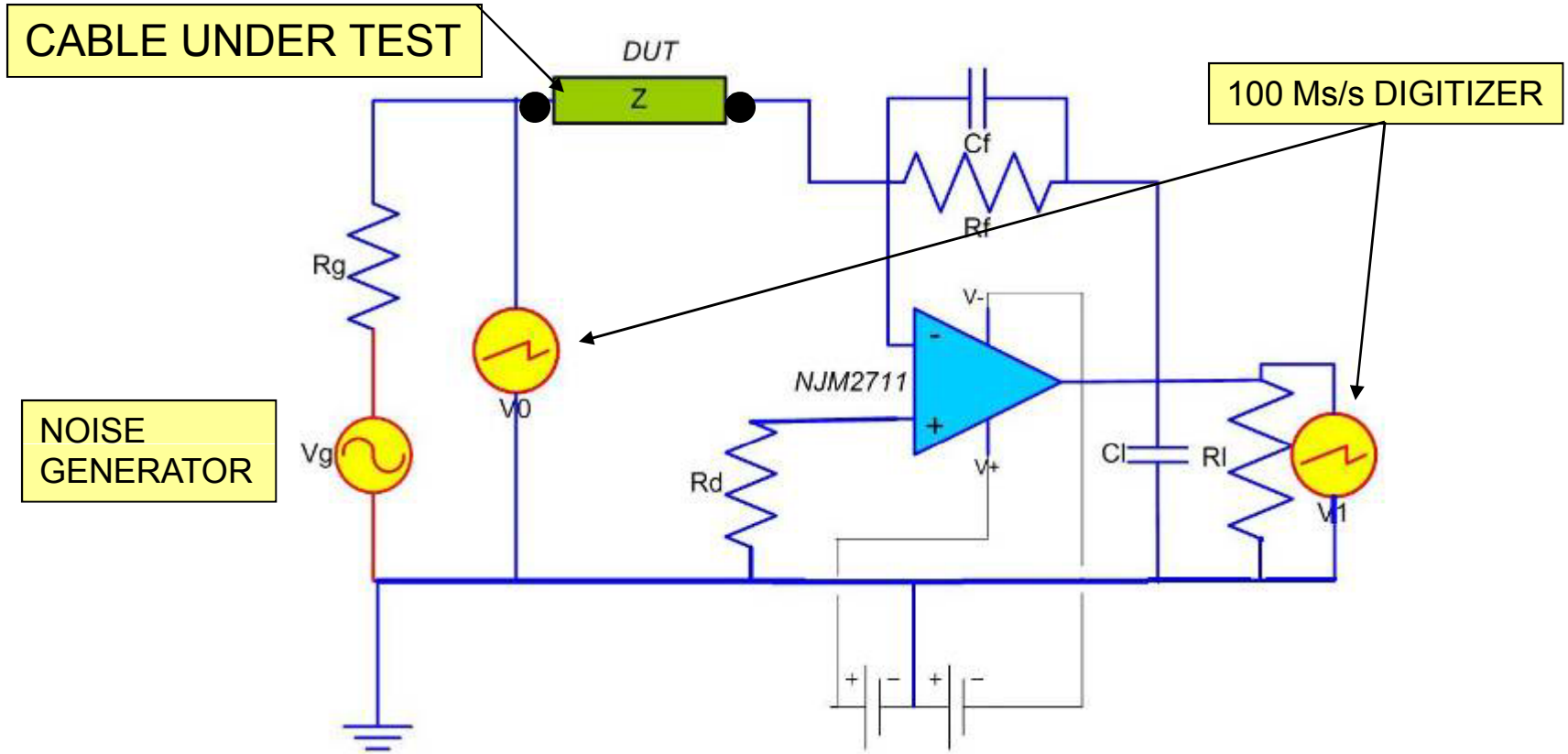

$$Z_{DUT} = -\frac{V0}{V1} \times Z_f$$

Passive Components HF Transfer Function Setup (HRP-TF00)

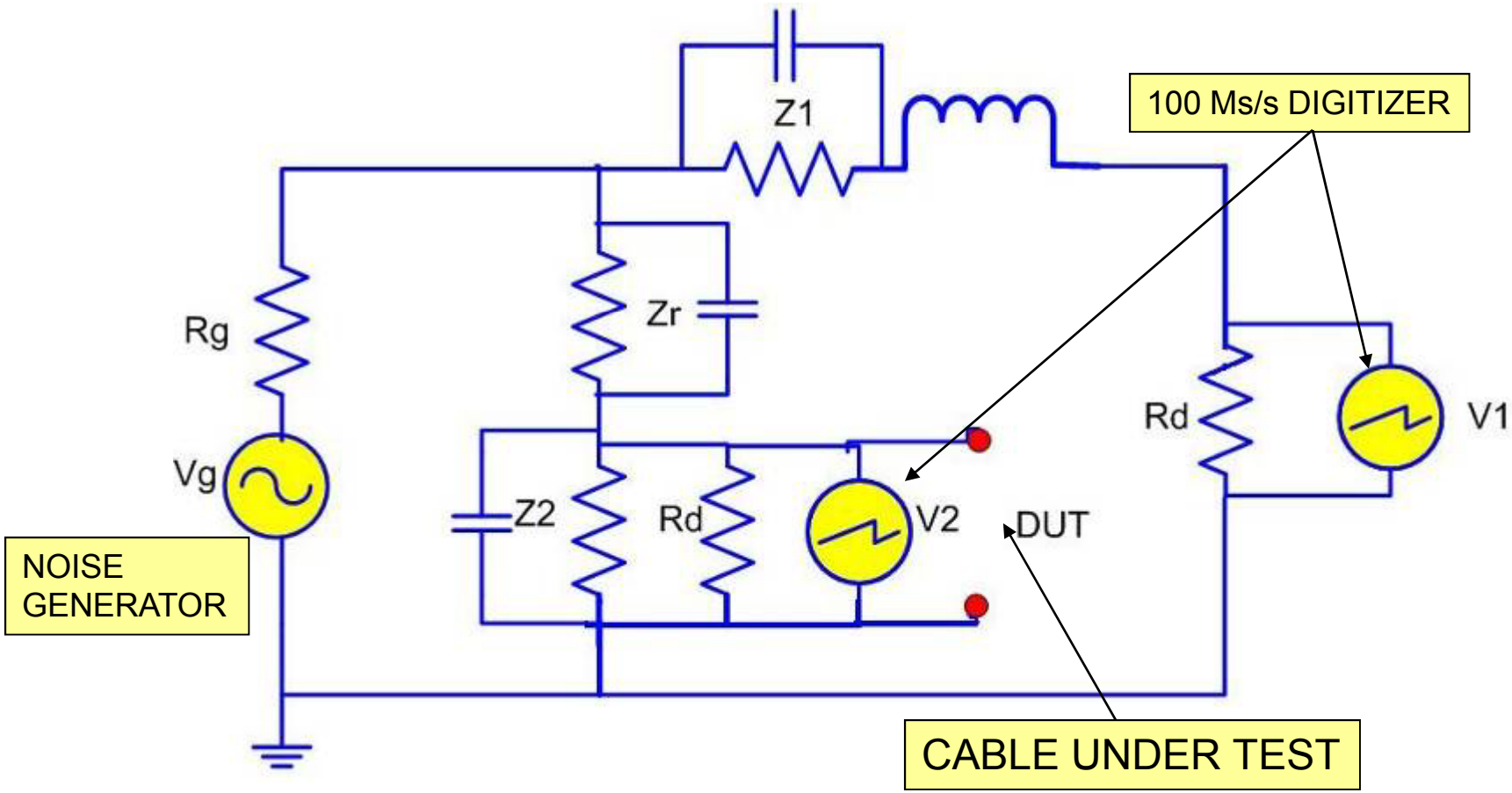

Resonance Analysis of loaded cables (HRP-TF00 setup)

TF amplitude and phase do not correspond to cable input impedance.
Phase shift of the cable input impedance is 0 at any resonance frequency, with the highest derivative.
Resonance frequency is a function of cable length and cable properties

Cable peak impedance values are a function of the load and the attenuation coefficient.

Best performance at higher frequencies (>5 MHz)

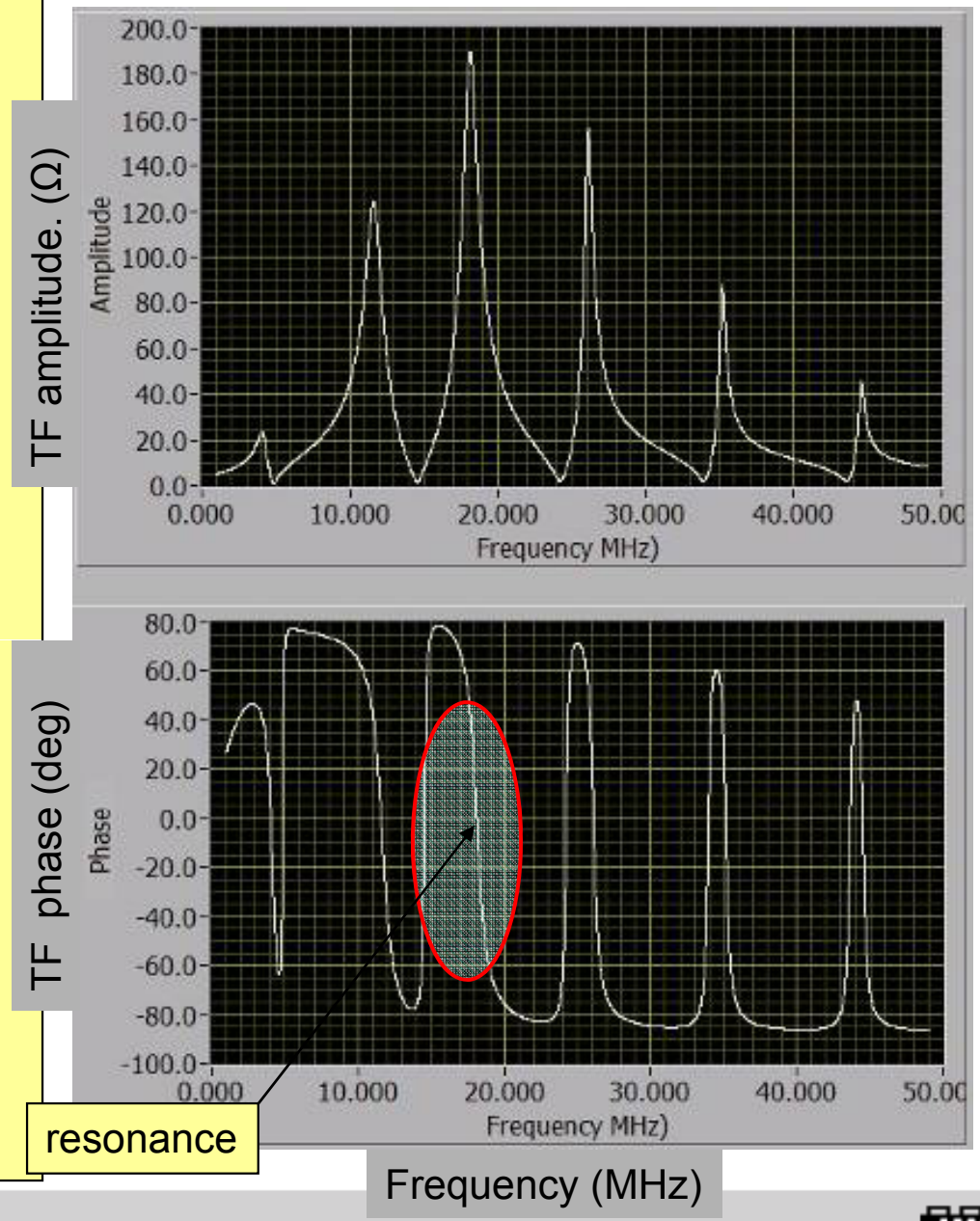

Multi Cable LIRA Analysis

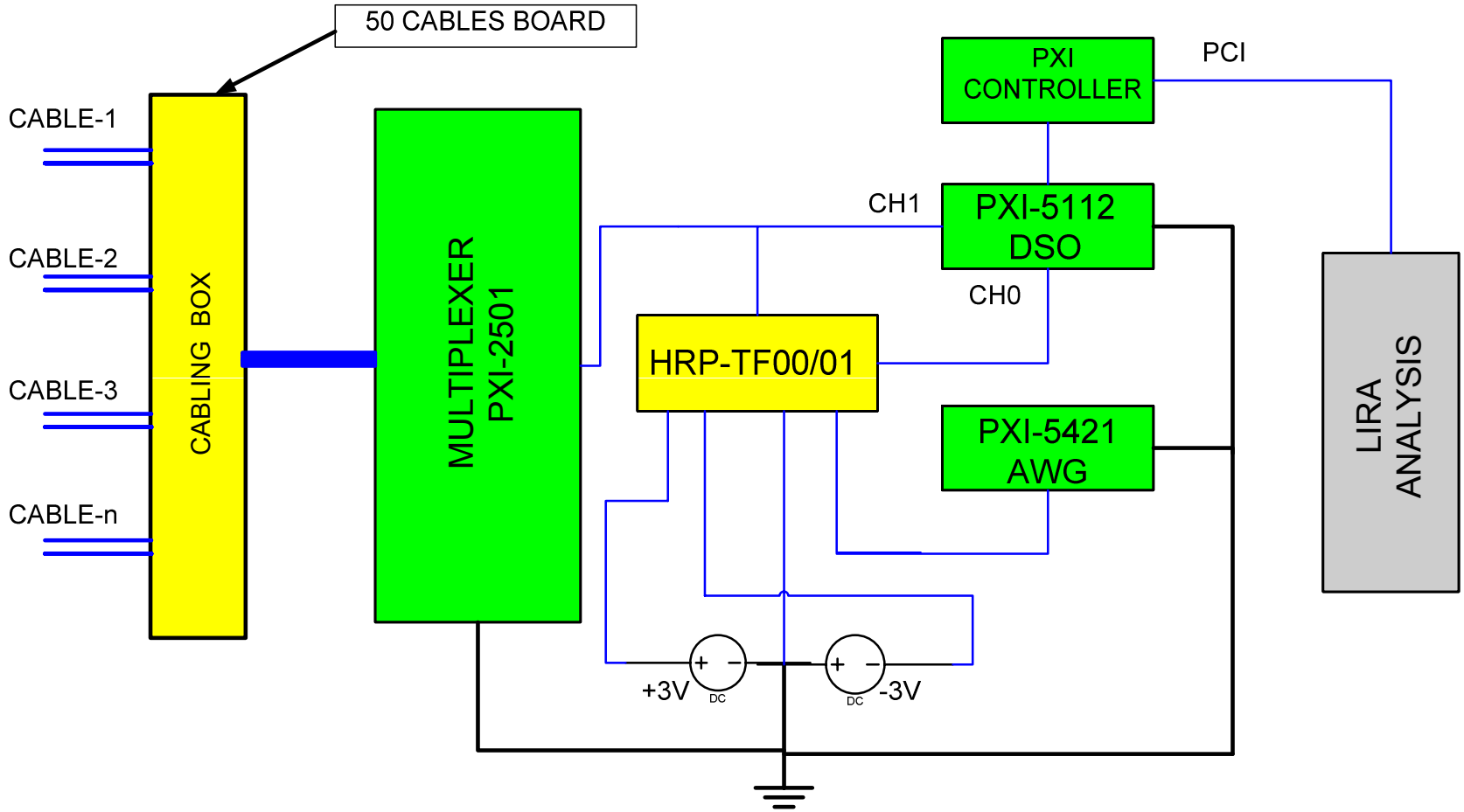

Frequency domain impedance analysis

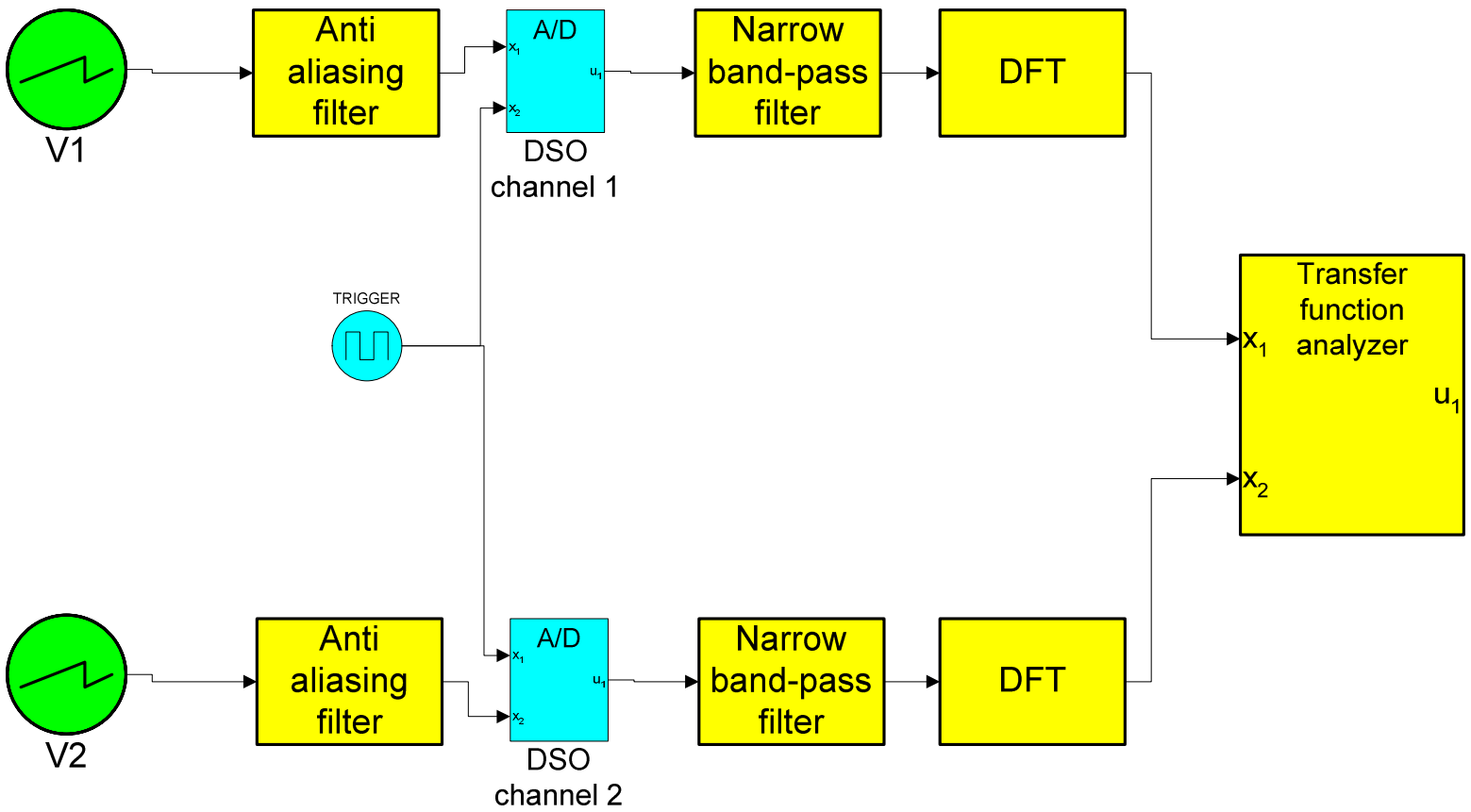

LIRA Test Equipment

PXI 100 Ms/s AWG generator

100 Ms/s, 2 ch. digitizer

PXI controller

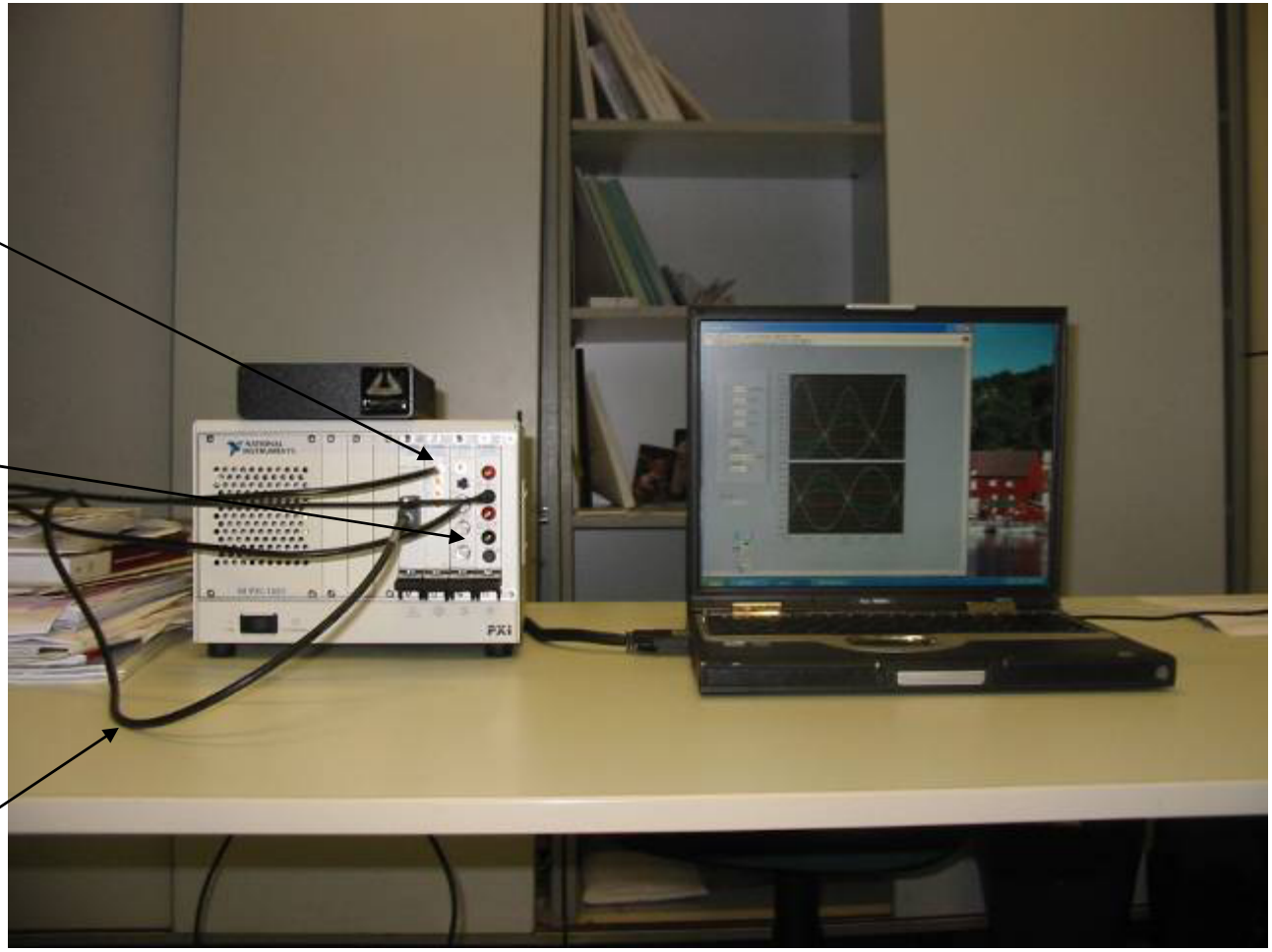

Real-Time LIRA Analysis Display (HRP-TF00 setup)

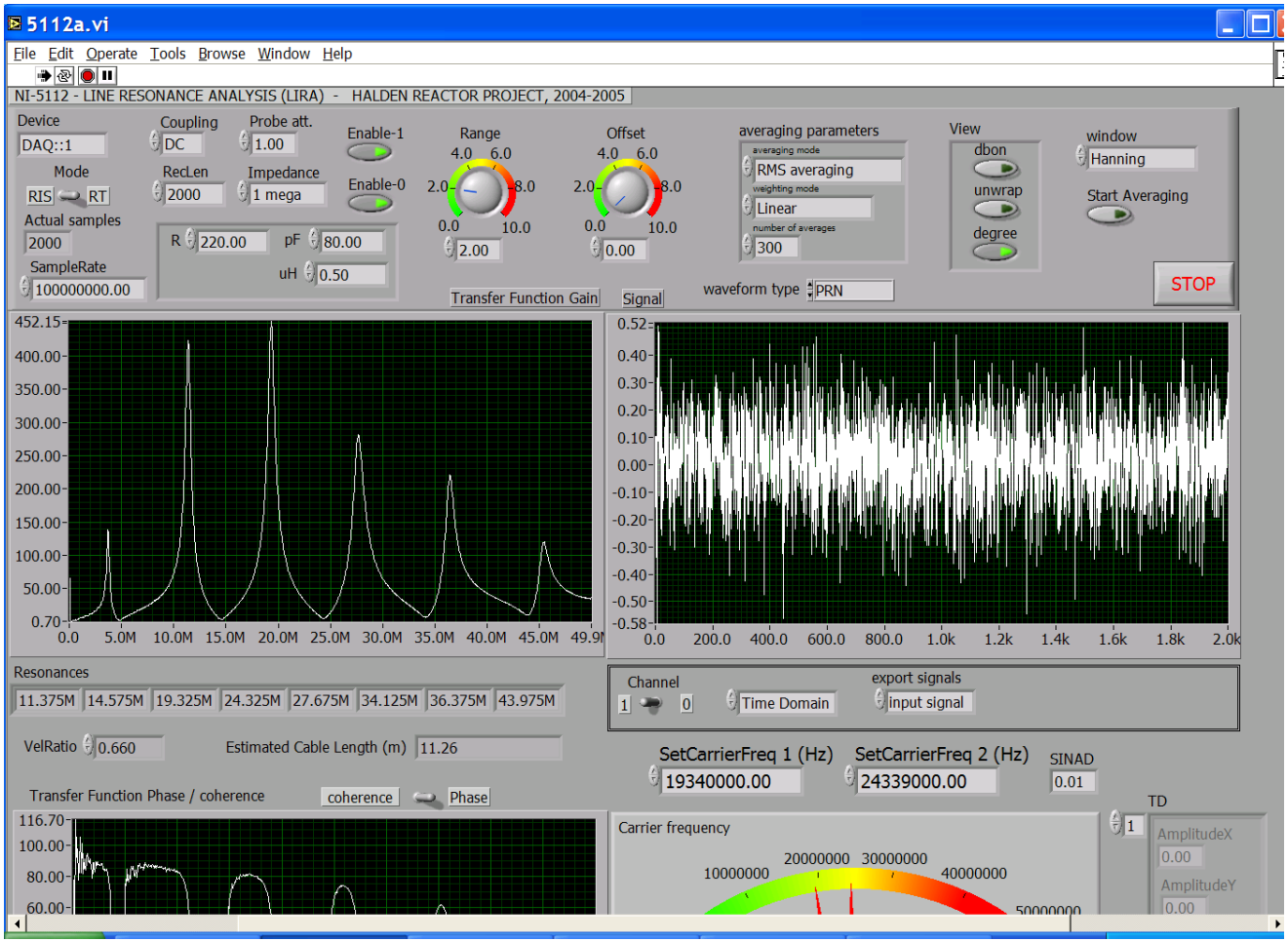

Why using HF resonance analysis

- Normal NPP installed cable lengths require >10 Mhz to study resonance effects
- Higher resonance frequencies exhibit higher sensitivity to aging parameters
- Key parameters Z_0 /characteristic impedance) and γ (propagation constant) become frequency independent in the HF range.
- Narrow band HF frequency analysis (ie 29-31 Mhz band) allows for filtering out noise components outside the significant range.
- Can be used on-line without disturbing the wire function. No need to disconnect the cable. Loading effects can be accounted for.

HRP Project on Cable Aging Phase 2 (2005/2006)

- Continuing development of **LIRA** methodology
- Development and tests with hardware simulated cables
- Real tests with HBWR available cables
- Setup collaborative work with other organizations (NRC, EDF,…)

HRP Project on Cable Aging Phase 3 (2006-2008)

- Retrieve cable samples with different insulation material and perform additional tests to generalize results.
- Investigate difficult scenarios like:
  - Thermal hot spot effects
  - Localized failures
  - Discontinuities in electric properties
  - On-line tests, ie during plant operation
- Develop portable test instrument for wire condition monitoring

Wire Systems CM Tasks

TASK 1
Make in-situ or laboratory measurements to evaluate the Condition Indicator *(CI)*, according to the CM technique selected

→

TASK 2
Compare the CI value with that measured at end of qualified life (*Cq*), before a successful DBE test

→

TASK 3
Evaluate the remaining time before reaching the qualified limiting condition, by applying the acceleration factor used for qualification (Arrhenius equation)

AI based CI estimator

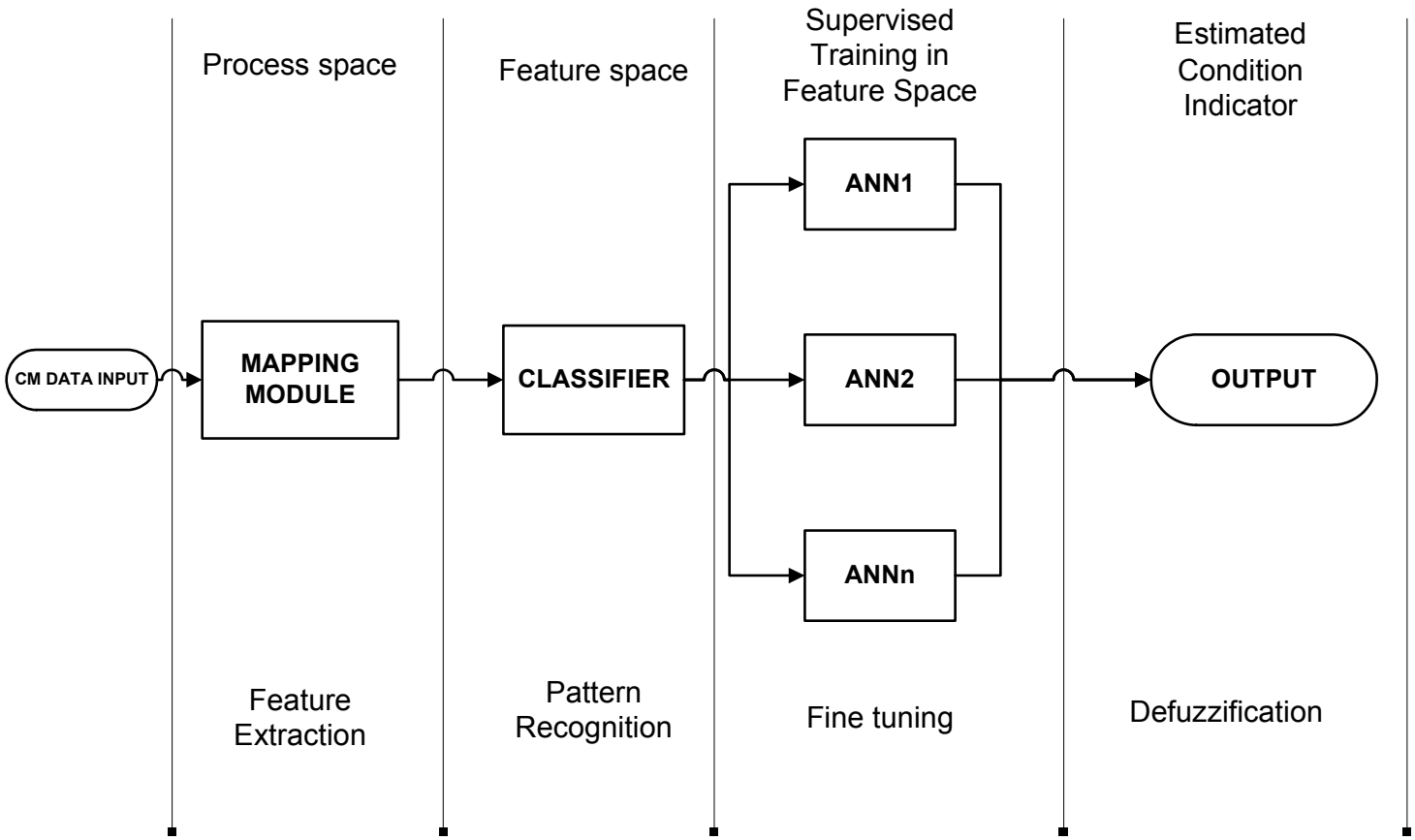

CI versus EAB correlation

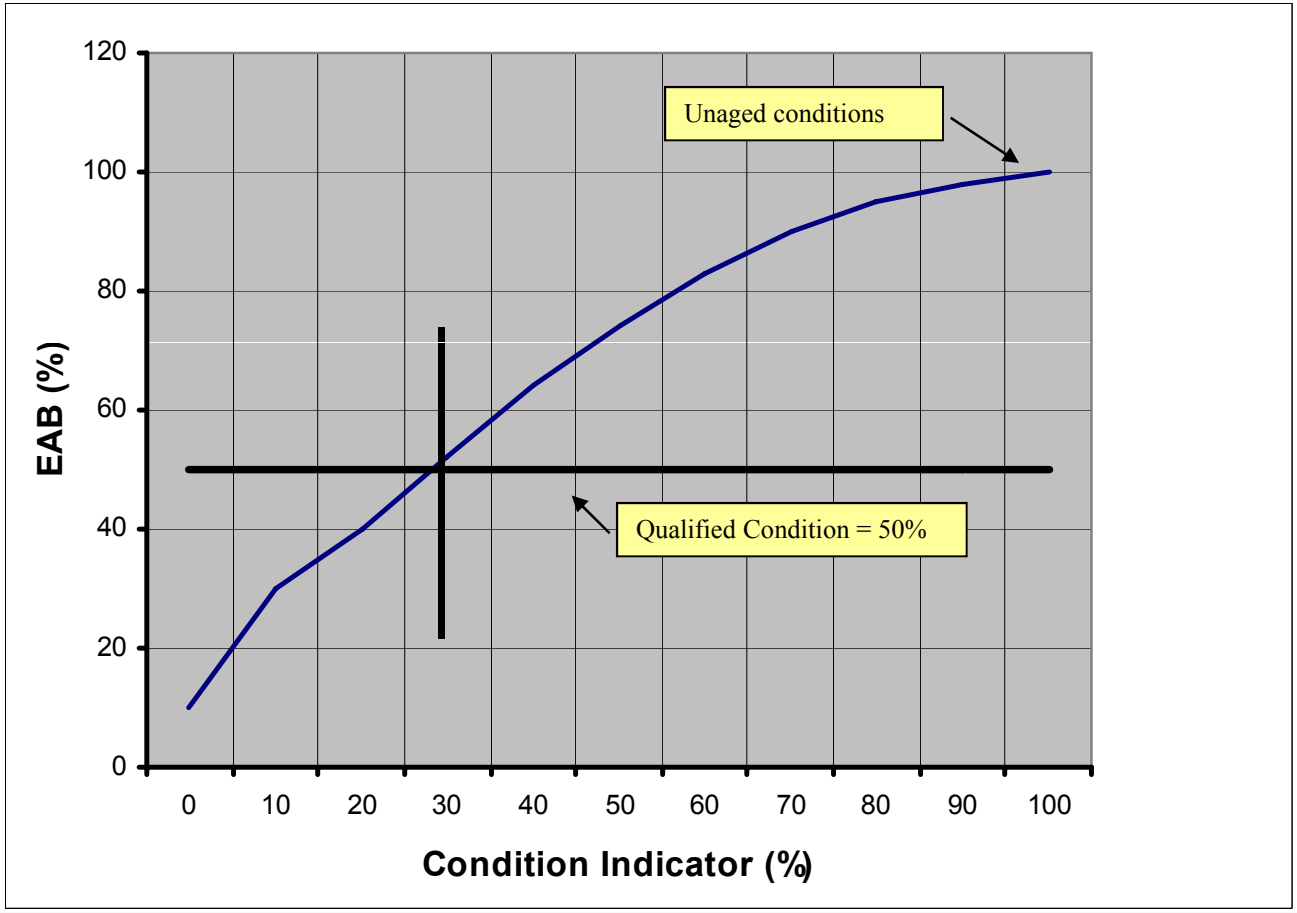

Predicting the residual cable life

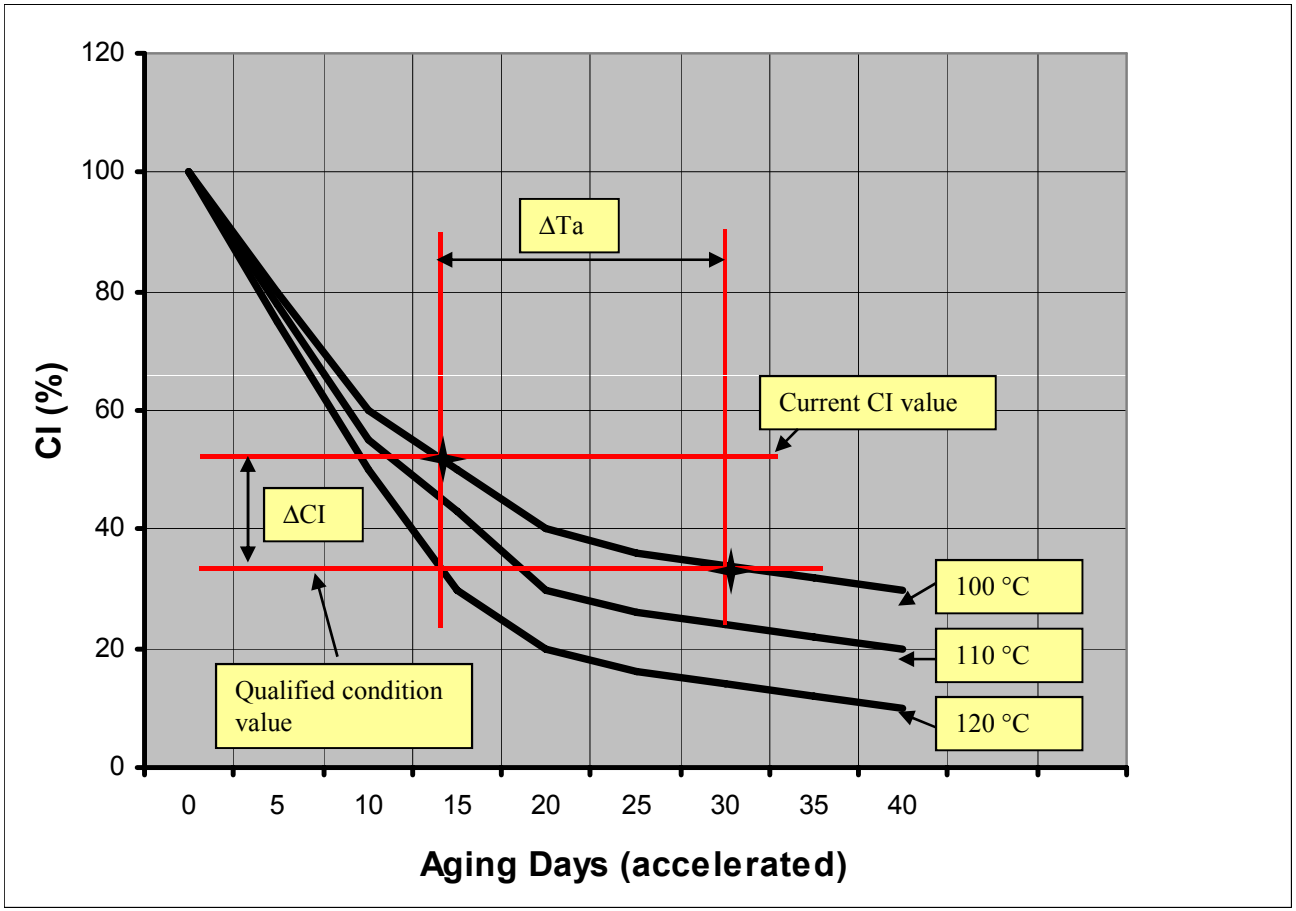

The End