UNITED STATES
NUCLEAR REGULATORY COMMISSION
ADVISORY COMMITTEE ON REACTOR SAFEGUARDS
WASHINGTON, DC 20555 – 0001

May 23, 2011

MEMORANDUM TO: ACRS Members

FROM: Weidong Wang, Senior Staff Engineer ***/RA/***
Reactor Safety Branch B, ACRS

SUBJECT: CERTIFICATION OF THE MINUTES OF THE ACRS SUBCOMMITTEE ON THE AP1000 REACTOR, NOVEMBER 17-19, 2010, ROCKVILLE, MARYLAND

The minutes of the subject meeting were certified on May 12, 2011, as the official record of the proceedings of that meeting. A copy of the certified minutes is attached.

Attachment: As Stated

Cc w/o Attachment: E. Hackett
Y, Diaz-Sanabria

UNITED STATES
NUCLEAR REGULATORY COMMISSION
ADVISORY COMMITTEE ON REACTOR SAFEGUARDS
WASHINGTON, DC 20555 – 0001

May 23, 2011

MEMORANDUM TO: Weidong Wang, ACRS staff

FROM: Harold B. Ray, Chairman
ACRS AP1000 Subcommittee

SUBJECT: CERTIFICATION OF THE MINUTES OF THE ACRS SUBCOMMITTEE ON THE AP1000 REACTOR, NOVEMBER 17-19, 2010, ROCKVILLE, MARYLAND

I hereby certify, to the best of my knowledge and belief, that the minutes of the subject meeting held on November 17-19, 2010, are an accurate record of the proceedings.

_____

_____/RA/_____5/12/2011_____
Harold B. Ray, Chairman *Date*
ACRS AP1000 Subcommittee

Certified on May 12, 2011 Issued on : May 23, 2011
Certified by: Harold Ray

REVISION 17 TO AP1000 DESIGN CONTROL DOCUMENT APPLICATION

November 17-19, 2010
ROCKVILLE, MARYLAND

INTRODUCTION

The Advisory Committee on Reactor Safeguards (ACRS) Subcommittee on the Westinghouse Electric Company's AP1000 advanced pressurized water reactor (PWR) design met in Room T-2B1 at the Headquarters of the U.S. Nuclear Regulatory Commission (NRC), located at 11545 Rockville Pike, Rockville, Maryland, on November 17-19, 2010. The purpose of this meeting was to review selected chapters of Revision 17 to the AP1000 Design Control Document (DCD) and its associated Advanced Final Safety Evaluation Report (FSER). The Subcommittee was briefed by, and held discussions with representatives of Westinghouse Electric Company (WEC) on the AP1000 DCD Amendment and with the NRC staff on the Advanced FSER. As part of the review process, NRC's regulations under 10 CFR Part 52 direct the staff to consult with the ACRS on safety issues before any reactor design can be certified or any NRC operating license can be approved.

The staff's Advanced FSER was organized based on the chapters found in NUREG- 0800 – NRC's "Standard Review Plan (SRP) for the Review of Safety Analysis Reports for Nuclear Power Plants: LWR Edition." To this end, the Subcommittee planned to gather information, analyze relevant issues and facts, and formulate proposed positions and actions, as appropriate, for deliberation by the full Committee of the ACRS at a later date. This was the eleventh Subcommittee meeting on the AP1000 design.

The Chairman for this ACRS Subcommittee was Mr. Harold Ray. Mr. Weidong Wang was the cognizant ACRS staff engineer for this topic and served as the Designated Federal Official for this meeting. Peter Wen, an ACRS staff engineer, supported this meeting as well. Part of the meeting was closed to public attendance and part of the meeting was open.

ATTENDEES

ACRS

H. Ray, Subcommittee Chairman
S. Abdel-Khalik, Member
J. Sam Armijo, Member

D. Bley, Member
M. Bonaca, Member
J. Rempe, Member
M. Ryan, Member
B. Shack, Member
J. Sieber, Member
S. Banerjee, Member
J. Stetkar, Member
B. Stojadinovic, Invited ACRS Consultant
T. Kress, Invited ACRS Consultant
G. Wallis, Invited ACRS Consultant
W. Wang, ACRS Staff
P. Wen, ACRS Staff

The NRC Staff

B. Thomas
J. Honcharik
J. Ma
J. Wu
J. Pires
L. Dudes
P. Chen
P. Clark
P. Patel
R. Hsu
R. Landry
J. Mckirgan
B. Anderson
J. Budzynski
K. Mott
W. Roggenbrodt
B. Gleaves
E. Mckenna
B. Tegeler
A. Hodgdon
H. Candra
P. Donnlly
M. Patterson
S. Park
J. Xu
M. Vera
M. Valentin
P. Buckberg
M. Kerr
H. Graves
S. Ali
T. Spicher
K. Hawkins
S. Chakrabarti
M. Chakravorty
A. Klett
G. Marker
T. Bergman
A. Hsia
M. Norato
A. Keim
Y. Hsii
J. Donoghue
K. Mott
S. Arndt
T. Le
J. Zhao
M. Hayes
H. Le
J. Segala
L. Wheeler
M. Kowal
T. Chapman
J. Budzynski

Westinghouse and Its Contractors

D. Moore	D. Trimble	A. Gagnon
B. Seelman	C. Frepoli	D. Golden
D. Lindgren	E. Cummins	G. Riegel
G. Scaddozzo	R. Sisk	R. Wessel
T. Schulz	T. Ray	T. Andreychek
T. Kindred	L. Tunon-Sanjur	M. Corletti
W. Lepay	C. Brockhoff	J. Himler
J. Ewald	M. Stella	M. Genuske
M. Lambert	R. Ofstun	R. Burger
Y. Sung	W. Odess-Gillett	A. Varma (Purdue)
M. Leslie	M. Melton	R. Orr
J. Parello	N. Petkov	

Others

A. Aughtman, SNC	E. Grant, NuStart	A. Monroe, SCE&G

Other Individuals and their affiliations attending this meeting are listed in the sign-in sheets in Attachment 1.

SCHEDULED PRESENTATIONS

The detailed agenda identifying the specific presentation topics comprising this meeting can be found in Attachment 2. Both during and following the scheduled presentations, the speakers responded to specific questions and comments from the ACRS Subcommittee Members. The scope of the questions, comments, and the speaker's responses had been captured in the meeting transcripts. As a result of questions and comments from the Members and responses from the speakers, follow-up actions were identified for further discussion at subsequent Subcommittee meetings. The topics presented during this meeting were:

1. Chapter 3 Design of Structures, Components, Equipment and Systems
2. Chapter 15 Accident Analyses

3. Chapter 23 Design Changes Proposed in Accordance with ISG-11
4. Action Items from previous Subcommittee meetings

ACRS Subcommittee meeting transcripts can be found at the following NRC Internet website location: http://www.nrc.gov/ reading-rm/doc-collections/acrs/tr/subcommittee/.

Opening Remarks

Subcommittee Chairman Ray made the opening remarks. He stated that this AP1000 Subcommittee meeting would continue to review the Safety Evaluation Report on Revision 17 to the AP1000 DCD. The review topics included Chapters 3, 15, 23, and Action Items from the previous ACRS meetings. Presentations for proprietary information would be closed to the public in order to discuss information that is proprietary to the applicant and its contractors pursuant to 5 U.S.C. 552(b), (c), (3), and (4).

Following the opening statement by the Subcommittee Chairman, the applicant and the NRC staff made presentations. The briefing slides with non-proprietary and non-security related information can be found in Attachment 3.

Key Points and Follow-Up Actions

Shield Building Design

WEC started with the highlights of the shield building (SB) design features and the integrated design process. WEC listed all NRC concerns that they have resolved. The WEC also addressed ACRS action items concerning 1) details of the plate-to-plate welds for the Steel Concrete Composite (SC) wall steel plates and how the quality of welds are assured, 2) details of the roof beam to tension ring connection, and 3) explanation of the pushover analysis methodology, which involves how lateral and vertical forces were selected, combined and applied, and how the results of this nonlinear analysis are interpreted. Dr. Amit Varma, WEC consultant, a professor from Purdue University made a presentation for the shield building behavior and design. He stated that capacity design is a fundamental design philosophy for the seismic design of the structure. He highlighted capacity design and provided design examples. He then summarized shield building global behavior and provided seismic design details. In the presentation wrap up, he stated that the design had undergone substantial improvements and features have been implemented into the shield building design that increases the safety margin and make the SC shield building act more as a unit.

Following the WEC presentation, Laura Dudes, Deputy Director of the Division of Engineering made introduction remarks for the staff's the shield building review presentation. She recognized the tremendous effort by the review team, including engineers from the Office of New Reactors, Office of Research, as well as numerous contractors for the last three years. NRC raised key concerns associated with the steel composite design and as a result, WEC has made substantial design changes to the shield building, performed testing of key components,

and performed an additional engineering analysis to validate the design assumptions and methodology. Deputy Director Dudes also pointed out that the non-concurrence process was initiated by a staff member and it was documented in accordance with the NRC procedures. The staff also documented a response to that non-concurrence. The document package will be made available to the public.

The staff presented its reviews of the SB design. It highlighted the safety function of the SB, which is a safety-related seismic category I structure with uniqueness in that it is part of the passive containment cooling system. The staff presented the regulations and the structural acceptance criteria. The presentation also covered the reviews of design methods, which includes analysis and testing. Review conclusions were made respectively in designs of cylindrical SC wall, SC/RC connection, tension ring and air inlet region, roof and Passive Containment Cooling System (PCS) tank, and construction & inspection.

Dr. John Ma presented his non-concurrence issue on the use of brittle structural models in the SC wall of the shield building. He summarized the design code used in the design and provided graphs for the strength, ductility, ductility ratio, and energy dissipation capability. He also provided examples with pictures of the impacts due to brittleness and insufficient ductility of structures. He provided technical arguments and summarized his conclusion that the SB design by the WEC is insufficient.

WEC came back on the second day after the SB design non-concurrence presentation by Dr. Ma. WEC stressed that the AP1000 design process accounts for the effects of combined in-plane and out-of-plane forces and the SB has been designed to have system level ductility.

Other Chapter 3 Topics Discussed

The WEC and staff presented other topics in the DCD Chapter 3, which included:

– General Design Criteria
– Classification of Structures, Components, and Systems
– Wind and Tornado Loadings
– Water Level (Flood) Design
– Missile Protection
– Postulated Pipe Rupture Dynamic Effects
– Seismic Design
– Design of Category I Structures
– Mechanical Systems and Components
– Seismic and Dynamic Qualification
– Environmental Qualification

Long-Term Cooling Debris Issue Resolution

There were four ACRS Action Items related to this issue and they are summarized below.

For Action Item No. 68, the applicant responded to the questions related to the WCOBRA/TRAC modeling and the analysis results. The WEC presented the worst LOCA break location for LTC analyses. It also addressed flow oscillations in the analyses and model nodalization sensitivity, such as the sensitivity to the core collapsed levels. Dr. Banerjee requested additional information on the resistance (K/A^2) for the AP1000 fuel assembly (FA) debris tests. The WEC representatives came back on the second day and presented the test resistances compared to the equivalent resistance in the analysis case 10 in a table format. It showed that, with the highest test resistance, AP1000 still maintains margin to the acceptance criteria. The applicant also presented additional plots for the hot assembly void fractions, core inlet flow rate, core inlet pressure drop and downcomer collapsed liquid level.

For Action Item No. 69, the applicant addressed the ACRS request for the long term cooling analysis margins. The applicant presented two new analyses with increased debris bed resistance and the results demonstrated considerable margin. The applicant also presented the Critical Heat Flux (CHF) correlation used in the code and plotted the comparison of heat fluxes from Chang CHF and AP1000 analysis. Since the heat flux results from the two new analyses were not shown, Member Banerjee requested the applicant to plot them in the same graph. The applicant took the action in the following day and showed the new results. The new plots demonstrated that no dry-out would occur in the analysis.

For Action Item No. 70, the applicant addressed boron concentration levels. The applicant stated that there is no dryout in AP1000 core in post-LOCA and the boric acid precipitation formation would not occur because of the modest boron concentration that occurs with the highest debris resistance cases. The core exit qualities and maximum boron concentration were discussed for the high debris bed resistance cases.

For Action Item No. 71, the applicant addressed fuel assembly (FA) debris bed head loss sensitivities to flow rate, fiber characteristics, fiber loading, chemical loading, and testing protocols.

Chapter 15

The applicant provided an overview of the accident analyses. The applicant also presented information to close an open item related to control room habitability with passive air filtration system and a verification that the control room habitability system and the technical support center (TSC) designed in the AP1000 DCD meet the dose acceptance criteria. ACRS Action Items generated from the previous Chapter 15 discussion are discussed. Specifically, they are:

For Action Item No. 48, in which the ACRS asked the applicant to confirm 1) if there are interlocks for ADS1, 2, 3, 4 actuation and what kind of failure can occur and 2) if it occurs, what is the impact to the safety analysis. The applicant addressed the requests with the ADS interlock diagrams and valve actuation logic.

For Action Item No. 49, the applicant addressed ASTRUM methodology usage for the AP1000 best estimate large break LOCA analysis. The discussion included the AP1000 reactor transient comparison to the other WEC PWR for the LBLOCA in the initial blowdown phase. WEC

summarized the analysis code updates since the certified design for Revision 15. The ASTRUM methodology was approved in US for 2-, 3-, and 4-loop WEC plants. WEC concluded that the AP1000 is similar to a WEC 3-loop from the large break perspective and it is applicable for the AP1000 analysis.

For Action Item No. 50, the applicant addressed water level calculation in the core and it concluded that the there is sufficient liquid maintained in the vessel during the Core Makeup Tank (CMT) injection phase to provide core cooling.

Chapter 23

The applicant and the staff presented the proposed design changes that were submitted subsequent to DCD, Revision 17 and that satisfy one or more of the criteria of Interim Staff Guidance 11. There were many design changes and categories of those changes include: correction of significant errors, changes to ensure compliance with NRC regulations, changes to support other licensing-basis documents, and changes needed to address significant vulnerabilities identified by probabilistic risk assessments or other studies. One example of the design change is an addition of a vacuum relief system to the containment. This system is to prevent external differential pressure between containment and the shield building from exceeding the design value. The staff evaluated this change in the areas of system design and analyses, containment isolation and leak rate testing, valve design qualification and testing, instrumentation and control, and technical specifications. The staff concluded that the design satisfies the NRC regulation.

Updated Follow-up Action Items Table

The Action Items Remaining in the Action Item Table:

Action Item No. 4. RCP Flywheel Design, Member Armijo had a concern for the 18Cr18Mn material used in the flywheel. This material is not tested sufficiently to demonstrate Stress Corrosion Cracking resistance in the coolant environment. WEC may provide additional information for the next ACRS subcommittee meeting.

Action Item No. 6. Flow Distribution - WEC needs to provide supplemental information to address ACRS comments/concerns for the flow skit. Specifically, the concern was about why 5% flow reduction in DNBR calculation is appropriate in light of the core inlet flow distribution with the flow skirt from CFD prediction and scaled flow tests.

Action Item No. 10. RCS flow measurements - WEC needs to provide supplemental information to address ACRS comments/concerns on the evidence that the various measurement uncertainties approximate Gaussian distribution and on the estimate of the flow based on pressure drop measurement in the core, which may not fit the Gaussian criteria.

Action Item No. 55. Testing of Squibb Valves— Verification/qualification program, In-service Testing (IST) program – WEC Committed to discuss post seismic testing.

Action Item No. 60. Flow distribution on the containment vessel shell - WEC needs to present information on flow striping on 12/1 to address remaining interest in water film characteristics.

Action Item No. 72. Diverse Actuation System (DAS) availability issue remains and the staff needs to update Automatic Depressurization System (ADS) blocker status.

Action Item No. 73. Turbine over speed - item 2 of question related to 120% over speed condition still remains.

Attachments

1. Sign-In Sheets
2. Meeting Agenda
3. ACRS AP1000 Subcommittee Action Items Table
4. Presentation Slides from Open Sessions

Attachment 1

ADVISORY COMMITTEE ON REACTOR SAFEGUARDS

SUBCOMMITTEE MEETING ON AP1000

November 17, 2010
Date

NRC STAFF SIGN IN FOR ACRS MEETING

PLEASE PRINT

	NAME	NRC ORGANIZATION-
1	Billy Gleaves	NRO / DNRL
2	Ann Hodgdon	OGC
3	Eileen McKenna	NRO
4	Pei-Ying Chen	NRO / DE
5	Jose Pires	NRO / RES
6	Hernando Candra	NRC / RES
7	Phyllis Clark	NRC / NRO
8	Patrick Donnelly	NRO / NWE2
9	John McKirgan	NRO / DSRA / SPCV
10	Ramin Pedd	NRO / DE / SEB1
11	Brian Thomas	NRO / DE / SEB1
12	Goutam Bagchi	NRO / DSER
13	Malcolm Patterson	NRO / DSRA
14	Sunwoo Park	NRO / DE
15	Jim Xu	NRO / DE
16	Marieliz Vera	NRO / DE
17	Milton Valentin	NRO / DE
18	Perry Buckberg	NRO / DNRL / NWE2
19	Matthew Kern	NRR / CVIB
20	John Wu	NRO / DE
21	Madhumita Sircar	RES / DE
22	Herman Graves	RES / DE
23	Syed Ali	RES / DE
24	Terri Spicher	NRO / DNRL
25	John Honcharik	NRO / DE
26	Kim Hawkins	NRO / DE
27	Samir Chakrabarti	NRO / DE
28	Manas Chakravarty	NRO / DE

Attachment 1

ADVISORY COMMITTEE ON REACTOR SAFEGUARDS

SUBCOMMITTEE MEETING ON AP1000

November 17, 2010
Date

NRC STAFF SIGN IN FOR ACRS MEETING

PLEASE PRINT

	NAME	NRC ORGANIZATION-
1	Andrey Klett	NRC/NRR/DIRS
2	Greg Makar	NRC/NRO/DE
3	Tom Bergman	NRC/NRO/DE
4	A. H. Hsia	NRC/NRO/DE
5	Joe Donoghue	NRO
6	K. R. HSU	NRO/DE
7	MICHAEL NORATO	NRO/DE
8	Phyllis Clark	NRO
9		
10		
11		
12		
13		
14		
15		
16		
17		
18		
19		
20		
21		
22		
23		
24		
25		
26		
27		
28		

Attachment 1

ADVISORY COMMITTEE ON REACTOR SAFEGUARDS

SUBCOMMITTEE MEETING ON AP1000

November 17, 2010
Date

PLEASE PRINT

	NAME	AFFILIATION
1	Gerald Riegel	Westinghouse
2	Ronald Wessel	Westinghouse
3	James Parello	Westinghouse
4		
5		
6		
7		
8		
9		
10		
11		
12		
13		
14		
15		
16		
17		
18		
19		
20		
21		
22		
23		
24		
25		
26		
27		
28		

Attachment 1

ADVISORY COMMITTEE ON REACTOR SAFEGUARDS

SUBCOMMITTEE MEETING ON AP1000

November 17, 2010
Date

PLEASE PRINT

	NAME	AFFILIATION
1	Jerry G. Sims	Nuclear Power Plt. Security Cons., LLC
2	RICHARD ORR	WESTINGHOUSE
3	Rob Sisk	WEC
4	TOD H. BAKER	WEC
5	Amy M. Monroe	SCE&G
6	Michelle Deemer	Westinghouse
7	John McConaghy	Duke Energy
8	RONALD LINDGREN	WESTINGHOUSE ELECTRIC
9	Keith Coogler	WEC
10	WILLIAM LAPAY	WEC
11	[illegible]	
12	JOSEPH BRAVERMAN	BNL
13	Bob Hirmanpour	NuStart
14	Rolf Ziesing	WEC
15	Charles Herbst	SNC
16	Don Moore	SNC
17	Amy Aughtman	SNC
18	Mike Corletti	WEC
19	Bruce Ebbeson	Shaw
20	[illegible]	
21	Eddie R Grant	NuStart / EXCEL Services
22	Neil Haggerty	NuStart / EXCEL Services
23	Penny Toniolo	WEC
24	Nicole Creamer	WEC
25	Wes Spurlock	SNC
26	VAUGHN THOMAS	
27	Carl [illegible]	TBD
28	Mike Melton	WEC
29	JOHN DEBLASIO	WEC
30	Rich Morante	BNL
31	DALE WISEMAN	WEC
32	RICH GRUMBIR	NUSTART

Attachment 1

ADVISORY COMMITTEE ON REACTOR SAFEGUARDS

SUBCOMMITTEE MEETING ON US-APWR00

November ~~23~~ 18, 2010
Date

NRC STAFF SIGN IN FOR ACRS MEETING

PLEASE PRINT

	NAME	NRC ORGANIZATION
1	Eileen McKenna	NRO
2	Billy Cleaves	NRO
3	Jim Stuniska	NRO/DE
4	John McKirgan	NRO/DSRA
5	Andrea Keim	NRO/DCIP
6	Jim Xu	NRO
7	Perry Buckberg	NRO/DNRL
8	PATRICK DONNELLY	NRO/DNRL/NWE2
9	Y. Gene Hsii	NRO/DSRA/SRSB
10	Joe Donoghue	NRO
11	RALPH LANDRY	NRO/DSRA
12	Greg Makar	NRO/DE/CIB1
13	Ken Mott	NRO/DE/ICE4
14	[illegible]	NRO/DNRL
15	STEVEN ARNDT	NRR/DE
16		
17		
18		
19		
20		
21		
22		
23		
24		
25		
26		
27		
28		

Attachment 1

ADVISORY COMMITTEE ON REACTOR SAFEGUARDS

SUBCOMMITTEE MEETING ON US-APWR

November ~~29~~ 18, 2010
Date

PLEASE PRINT

	NAME	AFFILIATION
1	RICHARD ORR	WESTINGHOUSE
2	ED CUMMINS	"
3	[illegible]	WEC
4	Don Moore	SNC
5	Neil Haggerty	NuStart
6	Jerry G. Sims	Nuc. Sec. Consulting, LLC
7	PHIL MATHEWSON	WEC
✓ 8	Ronald Wessel	Westinghouse
X 9	DONALD LINDGREN	WESTINGHOUSE
X 10	James Parello	Westinghouse
✓ 11	Bob Hirmanpour	NuStart
12	Keith Coogler	WEC
13	Thomas Ray	Westinghouse
✓ 14	Wes Sparkman	SNC
X 15	Gerald Riegel	Westinghouse
16	TERRY SCHULZ	WEC
17	Julie Cotalano	Westinghouse
18	Meghan LESLIE	WESTINGHOUSE
X 19	Giuseppe Scandolozzo	ANSALDO NUCLEARE / WEC
20	Daniel Golden	Westinghouse
X 21	David McDevitt	Westinghouse
X 22	Steve Collar	Westinghouse
X 23	Andre F. Gagnon	Westinghouse
24	Satish Iyengar	Consultant for Westinghouse
25	NIKOLAY PETKOV	WESTINGHOUSE
26	Charles Herbst	SNC
X 27	TIM ANDREYCHEK	WESTINGHOUSE
✓ 28	Rolf Ziesing	Westinghouse
✓ 29	John DEBLASIO	WESTINGHOUSE
✓ 30	John McConaghy	Duke Energy

Attachment 1

ADVISORY COMMITTEE ON REACTOR SAFEGUARDS

SUBCOMMITTEE MEETING ON US-APWR

November ~~29~~ 18, 2010
Date

PLEASE PRINT

	NAME	AFFILIATION
1	Jill Monahan	Westinghouse
2	Tom Kindred	Westinghouse
3	RICHARD GRUMBIR	NUSTART
4	BRAD CARPENTER	WESTINGHOUSE
5	BOB SEELMAN	WESTINGHOUSE
6	Eddie R Grant	NuStart
7	Amy M. Monroe	SCE&G
8		
9		
10		
11		
12		
13		
14		
15		
16		
17		
18		
19		
20		
21		
22		
23		
24		
25		
26		
27		
28		

Attachment 1

ADVISORY COMMITTEE ON REACTOR SAFEGUARDS

SUBCOMMITTEE MEETING ON AP1000

November 19, 2010
Date

NRC STAFF SIGN IN FOR ACRS MEETING

PLEASE PRINT

	NAME	NRC ORGANIZATION-
1	John McKirgan	NRO/NRO
2	Eileen McKenna	NRO/NRO
3	RALPH LANDRY	NRO/DSRA
4	Brian Thomas	NRO/DE/SEB
5	Y. Gene Hsii	NRO/DSRA/SESIS
6	John Honcharik	NRO/DE
7	Tuan Le	NRO/DE
8	Perry Buckberg	NRO/DNRL
9	Jack Zhao	NRO/DE
10	Michelle Hayes	NRO/DSRA
11	Abrady	NRO/DSRA
12	HIEN LE	NRO/DCIP
13	John Segala	NRO/DSRA/SBPA
14	LARRY WHEELER	NRO/DSRA/SBP
15	Mark Kowal	NRO/DCIP/CTTB
16	TRAVIS CHAPMAN	NRO/DCIP/CTSB
17	BOB TJADER	NRO/DCIP/CTSB
18	JOHN BUDZYNSKI	NRO/DSRA/SRSB
19	Joe Donoghue	NRO
20	Ann Hodgdon	OGC
21		
22		
23		
24		
25		
26		
27		
28		

Attachment 1

ADVISORY COMMITTEE ON REACTOR SAFEGUARDS

SUBCOMMITTEE MEETING ON AP1000

November 19, 2010
Date

PLEASE PRINT

	NAME	AFFILIATION
1	Eddie R Grant	Nustart / EXCEL
2	Rob Sisk	WEC
3	RICH GRUMBIR	NUSTART / Excel
4	Amy M. Monroe	SCE&G
5	ED CUMMINS	WESTINGHOUSE
6	BOB SEELMAN	WESTINGHOUSE
7	Bob Hirmempour	NuStart
8	Rolf Ziesing	Westinghouse
9	Rick Ofstun	Westinghouse
10	Megan Genuske	Westinghouse
11	Jill Monahan	Westinghouse
12	Michael Lambert	Westinghouse
13	BERND LASKEWITZ	WESTINGHOUSE
14	Luke Mulhollem	Westinghouse
15	Rustin Burger	Westinghouse
16	ME COUNTOURIS	WESTINGHOUSE
17	GARY SEDLACEK	WESTINGHOUSE
18	Amy Aughtman	SNC
19	Charles Herbst	SNC
20	JEFF HIMZER	WESTINGHOUSE
21	Tom Kindred	Westinghouse
22	Chuck Brockhoff	Westinghouse
23		
24		
25		
26		
27		
28		

Attachment 2

Advisory Committee on Reactor Safeguards 11/15 Rev
Meeting of the Subcommittee on the
Westinghouse AP1000 DCD
Rockville, MD
November 17-19, 2010

- Agenda -

Cognizant Staff Engineers: Weidong Wang (301-415-6279, Weidong.Wang@nrc.gov)
Peter C Wen (301-415-2832, Peter.Wen@nrc.gov)

November 17, 2010

Item	Topic	Presenter(s)	Time
1	Opening Remarks and Objectives	Harold B. Ray, ACRS	8:30 a.m. – 8:35 a.m.
2	Section 3.8.4 shield building OPEN session presentations applicant	W-	8:35 a.m. – 9:00 a.m.
3	Section 3.8.4 Applicant discussion (CLOSED)	W-	9:00a.m. -10:15 a.m.
	Break		10:15 a.m. – 10:30 am.
4	Section 3.8.4 Staff discussion (OPEN)	Brian Thomas, Bret Tegeler, Pravin Patel, Jose Pires	10:30am- 10:45am
5	Section 3.8.4 Staff discussion (CLOSED)	Brian Thomas, Bret Tegeler, Pravin Patel, Jose Pires	10:45 a.m.-11:30 am
6	Separate presentation re nonconcurrence (OPEN/ CLOSED)	John Ma	11:30am - noon
	Lunch		Noon-1pm
7	Other chapter 3.7 and 3.8 OI closure applicant (OPEN))		1pm-1:45pm
8	Other chapter 3.7 and 3.8 OI closure staff (OPEN)	3.7 Bret Tegeler, Pravin Patel, BNL 3.8 John Ma, BNL	1:45-2:30 pm
	Break		2:30pm -2:45pm
9	Chapter 3 OI closure applicant (OPEN) #46		2:45-3:15 p.m
10	Chapter 3 OI closure staff (OPEN)	Robert Hsu, John Wu, PY Chen	3:15-3:45 p.m
11	Action items #55 squib, new #60 coatings –if needed (OPEN)		3:45 p.m. – 4:45 p.m.
12	Closing remarks	Harold Ray	4:45 pm- 5:00pm

Attachment 2

Advisory Committee on Reactor Safeguards
Meeting of the Subcommittee on the
Westinghouse AP1000 DCD
Rockville, MD
November 17-19, 2010

- Agenda -

Cognizant Staff Engineers: Weidong Wang (301-415-6279, Weidong.Wang@nrc.gov)
Peter C Wen (301-415-2832, Peter.Wen@nrc.gov)

November 18, 2010

Item	Topic	Presenter(s)	Time
1	Opening Remarks and Objectives	Harold B. Ray, ACRS	8:30 a.m. – 8:35 a.m.
2	Time for remaining AIA action items (CLOSED- SGI)	Thom Ray, Jim Winters	8:35 a.m. – 9:30 am
3	GSI-191 followup items applicant (CLOSED) #37, #68-71		9:30am - 10:30 am
	Break		10:30am -10:45 am
4	Action items (CLOSED)		10:45am -11:45 am
	Lunch		11:45pm – 12:45pm
5	Chapter 15 action items applicant (CLOSED) 48, 49, 50 6 –white paper		12:45pm-2:30pm
	Break		2:30pm-2:45pm
6	Action items 65,66, DAS OOS		2:45pm- 4:15pm
7	Review of Action items Status	,	4:15am-4:45 pm
8	Closing Remarks		4:45 pm.-5pm

Attachment 2

Advisory Committee on Reactor Safeguards
Meeting of the Subcommittee on the
Westinghouse AP1000 DCD
Rockville, MD
November 17-19, 2010

- Agenda -

Cognizant Staff Engineers: Weidong Wang (301-415-6279, Weidong.Wang@nrc.gov)
Peter C Wen (301-415-2832, Peter.Wen@nrc.gov)

November 19, 2010

Item	Topic	Presenter(s)	Time
1	Opening Remarks and Objectives	Harold B. Ray, ACRS	8:30a.m. – 8:35 a.m.
2	Action items		8:35 a.m. – 10:15 a.m..
	Break		10:15a.m. -10:30 a.m.
3	Chapter 23 PCS air vents, RPV supports applicant part Closed?		10:30a.m. – 11:45am.
	Lunch		11:45 a.m.-12:45 pm
4	Chapter 23 Gas intrusion, PCS air vents staff (OPEN/CLOSED?)		12:45pm -1:30 p.m
5	Chapter 23 items –vacuum relief, CCS isolation applicant (OPEN/CLOSED?)		1:30 p.m. – 2:30 p.m.
	Break		2:30 p.m - 2:45 p.m.
6	Chapter 23 vacuum and CCS items staff (OPEN/CLOSED?)		2:45 p.m. -3:45pm
7	Other chapter 23 applicant/staff respond to questions		3:45 pm -4:15 pm
8	Plans for full committee	all	4:15pm-4:45pm
9	Closing remarks	Harold Ray	4:45pm-5:00pm

Attachment 3

AP1000 Design Safety Evaluation Report Meeting
ACRS Subcommittee Action Items (DRAFT)
July 23 – 24, 2009, October 6-7, 2009, November 5, 2009, February 2-3, 2010, April 22, June 24-25, , July 21-22, Sept. 20-21, and Oct. 5, Nov. 2-3, Nov. 17-19, 2010

Revised 12/1/2010

ID No.	Action Item	Status	Source (Chapter/ Discussion)	Westinghouse/ Bellefonte application	Who has action	Comment/Disposition
	ITEMS Below are from July 2009 meeting					
4	RCP Flywheel Design; I would like to receive stress corrosion test reports performed by W or pump supplier on the 18Cr 18Mn retainer ring material. I suspect that they have not tested this material sufficiently (if at all) to demonstrate SCC resistance in the coolant environment. Even though the ring is sealed in a Alloy 625 can, the assembly will not be inspected in service, and there will be no way of knowing whether the can will remain leak tight during service. If SCC of the retainer ring occurs, a serious accident would be likely. *-Armijo* ~~Also, interested in RCP locked rotor failure frequency used in PRA.~~ ~~Tom Kress~~	open	7/23 Summary discussion Chapter 5 Updated in Feb.	W	~~W~~ *DNRL*	~~Westinghouse to provide presentation in future ACRS meeting~~ *DNRL to provide results of staff review of revised missile analysis when complete. Was discussed during February meeting. Closed failure frequency concern at 4/22 meeting. Materials were provided to Sam after 4/22 meeting.* *Sept. 20-21 meeting had a discussion on this item but the issue remained. Additional summary of Sam's concerns after this meeting were sent to the staff on Sept. 24.* *Harold had a concern on the potential for a locked RCP rotor (due to flywheel failure) to cause a LOCA.* *Nov. 12, the staff provide information addressed Locked RCP rotor and Harold is satisfied with the response. Sam's issue remains.* *After Nov. 17-19 meeting, Sam made had a write-up on his comments.*

Attachment 3

AP1000 Design Safety Evaluation Report Meeting
ACRS Subcommittee Action Items (DRAFT)
July 23 – 24, 2009, October 6-7, 2009, November 5, 2009, February 2-3, 2010, April 22, June 24-25, , July 21-22, Sept. 20-21, and Oct. 5, Nov. 2-3, Nov. 17-19, 2010

Revised 12/1/2010

ID No.	Action Item	Status	Source (Chapter/ Discussion)	Westinghouse/ Bellefonte application	Who has action	Comment/Disposition
6	Flow distribution – Lower plenum anomaly and core inlet flow distribution. What is ratio of peak/average and minimum/average bundle flows with the skirt. Provide further information about the tests ongoing in Japan, including scaling methodology, CFD Method used, Reynolds number. What were the assumptions used in setting up the VIPER model and its justification. - Abdel-Khalik Sept. 20-21 SC meeting: The CFD code determination of flow mal-distribution due to the inlet flow shirt showed a minimum-to-average value of 0.88. To determine the potential effect on DNBR in the hot channel, VIPER was used with a 5% reduction of flow into the hot channel. As VIPER was used, it is possible that it accounted for cross-flow in the sub-channel to show that 5% reduction had acceptable effect on DBBR and is, therefore, conservative because full core cross-flow was show to re-distribute the flow at about ¼ heights from the inlet. Question: 1) What assumptions were used in the CFD calculation to determine the 0.88 value? 2) Did VIPOR invoke cross-flow in the 5% flow reduction calculations? If so, what was the assumption on cross-flow resistance? 3) Why is 5% the appropriate choice in view of the 0.88 CFD results? 4) How do we reconcile these results in view of the known fact that there are hot streams emanating from the top of core of operating reactors? - Said, Tom	open	7/24 Morning meeting Chapter 5, Chapter 4 Updated in Feb.	W	W/ DNRL/ NEW2	Westinghouse to provide additional discussion in future ACRS meeting. DNRL *has* provided background documents from AP1000 review that may help ACRS better understand the issue. Sept. 20-21 meeting had a discussion. Additional questions were raised (added). Nov. 17-19 SC discussed the issue. After reviewing the white paper and the reference 3, ACRS would like to see the full results of the CFD calculation to give us assurance that using 10% reduction to the nine center assemblies is a sufficient representation of the CFD determined flow non-uniformity.

Attachment 3

AP1000 Design Safety Evaluation Report Meeting
ACRS Subcommittee Action Items (DRAFT)
July 23 – 24, 2009, October 6-7, 2009, November 5, 2009, February 2-3, 2010, April 22, June 24-25, , July 21-22, Sept. 20-21, and Oct. 5, Nov. 2-3, Nov. 17-19, 2010

Revised 12/1/2010

ID No.	Action Item	Status	Source (Chapter/ Discussion)	Westinghouse/ Bellefonte application	Who has action	Comment/Disposition
10	~~Elbow Taps for RCS Flow Measurement. Need further information, discuss uniformity of flow. Provide ACRS background information for Westinghouse change for monitoring RCS flow to reflect an alternate testing method to the precision heat balance. The alternate testing method includes using elbow taps. OI SRP 16 CTSB 25.~~ ~~Banerjee~~ ~~Additional questions was raised during the April 22 meeting:~~ ~~How are various measurement indications reconciled, at operating plants?~~ ~~For AP1000 Design,~~ ~~What is the uncertainty in core flow;~~ ~~How is the uncertainty estimated;~~ ~~What is the measurement used for;~~ ~~and how accurate does it have to be?~~ ~~Said~~ Westinghouse to provide a reference for the statistical method of combining diverse measurements. - Sanjoy	open	7/24 Chapter 16	W	W/DNRL	DNRL to provide relevant Westinghouse submittals to ACRS. Need submittals from Westinghouse. Communicated to Westinghouse on 1/15/2010 Westinghouse addressed this item in July 2010 meeting. Since Said was not presented during the meeting, slides and transcripts were sent to him after the meeting. Said was satisfied with the response by Westinghouse. During the meeting, Sanjoy further requested a reference on the statistical method used for the flow uncertainty. Sept. 20-21 SC meeting, Sanjoy asked to pass the consultant reports by Dr. Wallis to staff to address his concerns. References were sent to Sanjoy and Wallis. Dr. Wallis provided feedback. Still waiting comments from Dr. Sanjoy. In Nov. 17-19 SC, Dr. Wallis had additional comments: "The Westinghouse statistical method is valid for Gaussian uncertainty. What is the evidence that the various measurement uncertainties approximate Gaussian? The estimate of flow based on pressure drop in the core (or part of it) may not fit the Gaussian criteria that could have bias, which is not removed by the method. How does Westinghouse respond?"
	ITEMS FROM June 2010 SC MEETINGS					

Attachment 3

AP1000 Design Safety Evaluation Report Meeting
ACRS Subcommittee Action Items (DRAFT)
July 23 – 24, 2009, October 6-7, 2009, November 5, 2009, February 2-3, 2010, April 22, June 24-25, , July 21-22, Sept. 20-21, and Oct. 5, Nov. 2-3, Nov. 17-19, 2010

Revised 12/1/2010

ID No.	Action Item	Status	Source (Chapter/ Discussion)	Westinghouse/ Bellefonte application	Who has action	Comment/Disposition
55	Testing of Squibb Valves— Verification/qualification program, IST program. - Banerjee Member Brown requested details on how many tests, what's the configuration, what are the upstream pressures, and etc, aside from how do you test them once they are in service. - Brown		Discussed in Chapter 14 and WEC will address it again in Chapter 3	*W/COL*	*W/COL*	*Both WEC and COL need to address this item.* Nov. 17-19 SC meeting: Commitment to post seismic testing needs to be discussed.
	ITEMS FROM July 2010 SC MEETINGS					

Attachment 3

AP1000 Design Safety Evaluation Report Meeting
ACRS Subcommittee Action Items (DRAFT)
July 23 – 24, 2009, October 6-7, 2009, November 5, 2009, February 2-3, 2010, April 22, June 24-25, , July 21-22, Sept. 20-21, and Oct. 5, Nov. 2-3, Nov. 17-19, 2010

Revised 12/1/2010

ID No.	Action Item	Status	Source (Chapter/ Discussion)	Westinghouse/ Bellefonte application	Who has action	Comment/Disposition
60	Numerous questions about water distribution around outside of containment and coatings application and inspection. To understand the coating on containment, ACRS needs clear diagrams and illustrations on the configurations of the containment and Shield Building. For example, Sam requested to see water management system for the shield building. Harold requested to confirm that the baffle is protected by Galvanizing. Brown asked how to ensure the right thickness of coating and some type of analysis on the fact that this coating is supposed to prevent rust. Members also requested to review the July 2 letter regarding revision to the Ch 6 of FSAR. Kress recommend to review technical basis behind the choice of 50 psi as the limit below which the chosen coating will not flake off during a LBLOCA. Will this be validated experimentally?	Open	Chapter 3/6		*WEC*	*WEC will provide more information when they come back on the Shield Building Design. Staff will address this issue in the COL safety evaluation in Chapter 6.* *July 2 letter is sent to the member through September AP1000 meeting status CD.* *Sept. 20-21 SC meeting, WEC made a detailed presentation on the configuration and coating program. The issue remain includes:* 1) Harold: (1) The COL applicant will need to define and explain the visual inspection that they will actually conduct; (2) the COL applicant will need to address how the buildup of contamination on the containment exterior could affect the required uniform wetting of the exterior by water during a DBA. 2) Said: For DCD, uniformity of the water flow around the containment and heat transfer needs to be assured. WEC will bring the expert to make a clarification. 3) Sanjoy: asked coating analysis on micrographs. ACRS will need to review research information concerning the bonding of the inorganic zinc coating to the containment vessel steel, on both internal and external surfaces – Tim of WEC will send the reference. Nov. 17-19 SC meeting: WEC will present information on flow striping on 12/1 to address remaining interest in water film characteristics.
	ITEMS FROM Nov 2-3. 2010 SC MEETING					

Attachment 3

AP1000 Design Safety Evaluation Report Meeting
ACRS Subcommittee Action Items (DRAFT)
July 23 – 24, 2009, October 6-7, 2009, November 5, 2009, February 2-3, 2010, April 22, June 24-25, , July 21-22, Sept. 20-21, and Oct. 5, Nov. 2-3, Nov. 17-19, 2010

Revised 12/1/2010

ID No.	Action Item	Status	Source (Chapter/ Discussion)	Westinghouse/ Bellefonte application	Who has action	Comment/Disposition
72	Members concerned about the spurious actuation of ADS valves due to a CCF of the PMS was not addressed in the design. Under this situation, can the safety function rely on the rest of the system to mitigate the scenario? Members also concerned that for manual DAS, out of service for 30 day is too long.	open				*Nov. 17-19 SC meeting:* DAS availability issue remains and staff will update ADS blocker status.

Attachment 3

AP1000 Design Safety Evaluation Report Meeting
ACRS Subcommittee Action Items (DRAFT)
July 23 – 24, 2009, October 6-7, 2009, November 5, 2009, February 2-3, 2010, April 22, June 24-25, , July 21-22, Sept. 20-21, and Oct. 5, Nov. 2-3, Nov. 17-19, 2010

Revised 12/1/2010

ID No.	Action Item	Status	Source (Chapter/ Discussion)	Westinghouse/ Bellefonte application	Who has action	Comment/Disposition
73	Close 56 and make Charlie's concern as a new item. Charlie commented to close points1 and 3 but leave points 2 open in his written write-ups. Charlie's remaining concerns are listed in the right column.	open				Status: RAI-SRP10.2-SBPA-02 Rev 3 on this issue was provided as requested. The following points apply based on a review of the RAI: 2. In addition, the response of the overall overspeed trip system is supposed to ensure that the TG speed will not exceed 120% of rated speed as stated in the Tier 2 DCD Chapter 10 Note following Table 10.2-2 Turbine Overspeed Protection. The Note follows: **Note:** Following the above sequence of events, the turbine may approach but not exceed 120 percent of rated speed. There is no acceptance criterion in Tier 1 Chapter 10 ITAAC/DAC for the Main Turbine System requiring an analysis that demonstrates that the sample time and processing architecture for each of the trip functions will be bounded such that this criterion will be met.

Attachment 3

AP1000 Design Safety Evaluation Report Meeting
ACRS Subcommittee Action Items (DRAFT)
July 23 – 24, 2009, October 6-7, 2009, November 5, 2009, February 2-3, 2010, April 22, June 24-25, , July 21-22, Sept. 20-21, and Oct. 5, Nov. 2-3, Nov. 17-19, 2010

Revised 12/1/2010

	CLOSED ITEMS					
1	GSI and Generic Issue Process. How is it addressed since Rev. 15? (example GSI-191)	closed	7/23 Summary discussion Chapter 1	W	DNRL	Provided additional presentation in Feb meeting
2	Can Non-condensible gases affect flow from IRWST. a) what ITAAC will be included b) heatup analysis -Abdel-Khalik, Banerjee	closed	7/23 Summary discussion Chapter 1, Updated in Feb.	W	W	ACTION: Westinghouse provided a discussion during Feb. *meeting* on how non-condensible gas issue was addressed. "need to hear rest of story" Closed in the Nov. 2-3 meeting.
3	RTD Relocation. Is there an impact on the dead-band for rod control. Are they at upper half or at top of the hot leg? -Abdel-Khalik, Ray	closed	7/23 Summary discussion Chapter 5	W	W	*Closed at October meeting.* ~~Westinghouse to provide presentation in future ACRS meeting~~
5	Pressurizer. Does the shape change affect "chugging" behavior with ADS discharge? What is the effect on level control setpoints?	closed	7/24 Summary discussion Chapter 5	W	W	Westinghouse provided presentation *at Nov* ACRS meeting. *DNRL has provided documents on safety analyses*
7	Zinc Injection (information on operating experience (14 foot core). Is there exothermic reaction; how much zinc coats on fuel.	closed	7/24 Chapter 19 meeting Chapter 5	W	W	~~Westinghouse to provide presentation in future ACRS meeting.~~ *Discussed at Oct meeting. DNRL to provide documents. Also was discussed during Nov meeting on chapter 9. Closed*
8	PTLR Process. Need to clarify how this is captured in TS, other examples (COLR).	closed	7/24 Chapter 5	W		*Closed at Oct meeting*

Attachment 3

AP1000 Design Safety Evaluation Report Meeting
ACRS Subcommittee Action Items (DRAFT)
July 23 – 24, 2009, October 6-7, 2009, November 5, 2009, February 2-3, 2010, April 22, June 24-25, , July 21-22, Sept. 20-21, and Oct. 5, Nov. 2-3, Nov. 17-19, 2010

Revised 12/1/2010

9	~~Turbine Overspeed Protection~~ ~~a) frequency of testing (6 months?)~~ ~~b) method of testing~~ ~~c) power supply independence~~ ~~d) diversity~~ ~~f) turbine missile analysis, include 1) How W used the available operating experience to justify both the challenge frequency and the failure rate for the valves. 2) What are those conditional probabilities of the discs coming apart for each of the overspeed conditions, design and intermediate overspeeds.~~ ~~Ray, Brown, Stetkar~~	closed	7/23 Chapter 10 Updated in Feb.	W	~~W~~ NRC	~~Westinghouse to revise DCD to correct mis-characterization about speed control, independence.~~ *Discussed at Feb meeting. Open questions on intercept valve test frequency and method of testing for overspeed.3 months -->6 months. Questions on turbine missile analyses diversity*l n June 2010 meeting, W provided sufficient information and members decided to close this item but produced an new item #56
12	Turbine missile generation. ACRS would like more information about assumptions in analysis -Sketkar questions	closed	7/24 Summary discussion Chapter 10	W	TVA/DNRL/NWE1	~~Issue to be discussed during chapter 3 review where missile generation from one unit s impact on a second unit is discussed. Also missile hazards analysis for existing units on the site should be addressed in presentation to ACRS~~ *Discussed at Oct and Feb meeting. Issue of Dual unit sites is adequately addressed. New questions were raised and they are added to Item 9.*
13	BLN Hydrology Issue and QA aspects. Staff to provide inspection report and public meeting accession numbers.	closed	7/24 Summary discussion Chapter 19	TVA	DNRL	8-10-09 update – action complete information provided to Mike Lee in a 7/28 email from Joe Sebrosky Discussion topic to be deferred to RCOLA site specific review

14	Concerned about ad-hoc basis of the staff's review of design changes to determine if a particular design change impacts other areas of the FSAR.	closed	7/23 Summary Discussion Chapter 5, Chapter 10	W	DNRL	*Closed by focus on "design changes" not just DCD changes*
15	Would like a better understanding of how GSI 199 (eastern Tennessee seismic zone) affects the seismic margins bounding approach. -Ray	closed	Chapter 19	both	DNRL/NWE1	Issue to be discussed during chapter 2 bellefonte presentation or during other SC on GSI-199. Closed in Feb. -site specific
16	Does the recent flood in France shed any In sights with regard to PRA? -Banerjee	closed	Chapter 19	both	DNRL/NWE1	Issue to be discussed during chapter 2 bellefonte presentation. Closed in Feb -site specific
17	Present information on "testing". Present testing done to support Rev 15 and 17 design certifications. Present testing done to demonstrate "as-built" – i.e. the initial test program. Present testing that is done throughout the life of the plant. -Abdel-Khalik	closed	Chapter 14	Both	W, TVA, DNRL	See item #2
18	Concerned about workload and what can be done to help ACRS (suggested that alternatives can be explored like thermal hydraulic issues being discussed for all design centers during one set of ACRS meetings).	closed	7/24 Summary Discussion		DNRL	DNRL to discuss issue with upper management and determine if there are alternatives. *Closed*

19	Staff to provide information regarding what is meant by rad significant	closed	Chapter 12			~~8/10- update added based on comment from Mike Lee. Need to review transcripts when available to better understand item~~ *Relates to July 22 ACRS letter on NEI-08-08. Generic to all COLs – closed with respect to AP1000 SC*
20	Provide information regarding how digital I&C failure rates were addressed in the PRA and whether there were improvements made in the design as a result of insights from the PRA. -Kress?	closed	Chapter 19			8/10- update added based on comment from Mike Lee. Need to review transcripts when available to better understand item. Discussed at Feb meeting
21	In several areas, the Committee sought figures or other visuals to understand the design changes (flow skirt, flywheel), functional block diagram on turbine controls. The Committee will be looking for this in future chapters.	closed	NA	Both	W/TVA/DNRL	*Chapter 7 presentation includes several figures.* Westinghouse will provide more figures in future presentations (1/15/2010). Closed in Feb
22	In most cases, the Committee was not particularly interested in process issues, such as handling of COL holder items. For future meetings, suggest not presenting COL and open items where this is the primary consideration.	closed	NA	Both	W/TVA/DRNL	discussed in February meeting
23	The Committee was interested in how the staff ensures that overall impacts are considered, such as: could something about COL impact upon the IBR usage, and are all effects of a particular design change evaluated. (relates to item 14 above)	closed	NA	Both	DNRL	DNRL to consider if additional information in this area should be presented to the ACRS. *Westinghouse will discuss their process during Nov meeting. Closed*
24	The Committee indicated that there is still confusion about RCOL transition process.	closed	NA	TVA	NWE1	Provide additional discussion in future ACRS meeting – *included during Nov 5 FC meeting. Closed in Feb*

Attachment 3

AP1000 Design Safety Evaluation Report Meeting
ACRS Subcommittee Action Items (DRAFT)
July 23 – 24, 2009, October 6-7, 2009, November 5, 2009, February 2-3, 2010, April 22, June 24-25, , July 21-22, Sept. 20-21, and Oct. 5, Nov. 2-3, Nov. 17-19, 2010

Revised 12/1/2010

25	*Human Factors Engineering, including Computer-Based procedures audit . Task analyses*	closed	*18*	*W*	*NWE2*	*DNRL provided documents. GA wants information on integration of HRA into HFE (from 11/5) –documents provided*
26	*Waste management forecast (by category and volume if available)* *-Ryan* *After June 2010 meeting, Dr. Ryan has the following comments:* The answers are there except for the forecast of volumes of materials in storage as Chairman Ray noted at line 12 on page 109. The purpose of these questions is to probe the amount of waste radioactive materials and their onsite storage periods. At some point 20, 40, 60, year hence they can become problematic. The query is to inquire as to their longer term plans for accumulated wastes. I do not agree that these answers close the question.	closed	*11*		COL	*COL to provide* Updated after June 2010 meeting. Closed in July 2010 meeting.
27	*PRA audit results. COL PRA?*	closed	*19*	*W*	~~*NWE2*~~ *Member Action*	*DNRL has provided documents and sent to members on 3/30/2010– under review*
28	*Pipe break hazard analyses (DAC)* *-Banerjee, Ray*	closed	*3.6*	*W*	*W/NWE2*	*Provide report when completed (2010)). Closed in Feb*
29	*Screening criteria for striping (thermal fatigue)* *-Banerjee*	closed	*3.12*	*W*	*W*	*Discuss at future meeting. Westinghouse is targeting April.* *Closed at 4/22 meeting*
30	*WESTEMS code and J-weld* *-Shack*	closed	3.9.1	*W*	*NWE2*	*Open items in SER – will discuss with AFSER.* *Closed in Feb.*

31	*Chapter 2 geotech information*	closed		*W*	*W/NWE2*	*Include when discussing related chapter 3 (seismic)* *Chapter 2 and part of Chapter 3 was discussed in July 2010 meeting.*
32	I&C Architecture(major changes) -Brown And there is still the open questions such as on high speed links Brown 6/25/2010	Closed	11/5	W	NRC	Addressed on November 19 and Feb 2-3. May be future questions. 6/25/2010, WCAP-17201-P (high speed links) sent to Brown. Integrated Action Item 43 to this item, since it is related to the high speed links. This Item is closed by a replacement of Action Item 6?
33	*In addition to design/hardware changes, Committee wants changes to methods* *-Abdel-Khalik*	closed	11/5 Updated in Feb.	*W*	*NRC*	*ASTRUM was discussd in Feb. New action item 49 has more questions about TH methods.; seismic analyses (future meeting). Pg 76 of Nov 5 Transcripts. Future changes to be highlighted* *Sept. 20-21 SC meeting discussed it. This is a general question and can be closed*

34	*HFE DAC closure* a) For I&C and HEF, Rev 15 DAC that have been deleted in Rev 17, Show the subcommittee details of how those DAC were satisfied, Two or three examples might be sufficient. (Dennis C. Bley) b) I&C DAC – Westinghouse indentified in the Nov 09 meeting that DAC close out was divided into 3 phases: Phase 1 DAC 1, Phase 2 DAC 2, Phase 3 DAC 3 What each DAC was intended to include and how each item was closed in each phase should be provided. (Charles Brown)	closed	11/5 Updated in Feb.	*W*	*NRC*	*Final SER should document DAC closure including acceptance criteria* *Sept. 20-21 discussed the DAC closure, Ch 18 resolved all DAC problem and this item is closed.*

35	*Boric acid deposition report (Bajorek) for Armijo* "The thrust of these concerns relates to the lack of prototypicality of the coolant used in the downstream flow blockage tests performed by W. Banerjee requested information on the concentration of dissolved aluminum and I was interested in the complete composition of the coolant (not just boric acid). Based on the material presented in the GSI 191 presentation, the coolant carrying the debris in these tests did not match or even approximate the composition, pH or temperature of the coolant that will exist after a LOCA. The physical state of the AlOOH will be highly dependent on chemistry and temperature, and this is the material that cements the fibrous debris. Without tests in prototypical environments, I do not see how anyone can conclude that the debris will not block the entries to the fuel assemblies. Maybe the staff can resolve my concern." - Armijo	closed	GSI-191 Updated in Feb.		*NRC*	*Provide copy of report* *In the Oct. 5, 2010 meeting and a few new Items (68, 69, 70, and 71) were raised to replace this item.*
36	*Amount of aluminum. See 35* *-Banerjee and Armijo*	closed	GSI-191		*W*	*Discuss with staff SER. Pg 1-293 of Nov 19 meeting Transcripts* *Closed in the Oct. 5 meeting*
38	*Concrete scouring* *-Harold*	closed	GSI-191		*W and NRC*	*Discuss at future meeting (RAI)* *Closed in the Oct. 5 meeting*
39	*Hot leg break – debris at top of core* *-Wallis*	closed	GSI-191		*W and NRC*	*Discuss at future meeting (RAI)* *Closed in the Oct. 5 meeting*

40	Underground piping (fluids) and conduit (electrical) and how they perform with regard to groundwater intrusion and surface water infiltration. The concern includes the pipe, connections and material performance at the connections (joint adhesives "welding" materials, etc.). A related question are any of the tritium task force results and recent experiences reported for Vermont Yankee and Indian Point raising issues for such piping. (Mike Ryan)	closed	9		*W and NRC*	*Discuss at future meeting. March/April pg 2-187 of Nov 20 meeting Transcripts. Closed at 4/22 meeting*
41	*RTCB test frequency* *Need to know more in operating experience.* *Charlie/Harold*	closed	7, 16		*W and NRC*	*Discuss basis for yearly (OI)* *Additional Information was provided by NRO and sent to Members in Sept. 2010 Status CD.* *Sept. 20-21 SC meeting discussed this issue and it remained open.* *Nov. 2-3 discussed and close it.*
42	*Cyber Security*	closed	7		*NRC*	*NWE2 provided copy of TR. Closed in Feb*
43	*HSL (high speed links) "topical report"* *-Brown*	open	7		*W*	*Westinghouse to provide reference. Related to SER OI? Under review. A report was sent on April 5, 2010.* *This item is replaced by action Item 32.*
44	*RTNSS tutorial* *-Ray*	closed			*DNRL*	*At Feb meeting*
45	*Multiple spurious actuation report* *-Ray,Maynard*	closed	9		*~~DNRL~~ W*	*Westinghouse to provide copy of report. Proprietary concerns? Feb discussion --> closed.*
47	Table 15.0-5 Uncertainties table need further discussion. Were instrument drift/ other uncertainties counted in the 1-2% power changes? (Said)	closed	15		*W/DNRL*	*Present at future meeting* *A brief was made to Said in the past and Said informed to close this item in Sept. 20-21 SC meeting.*

Attachment 3

AP1000 Design Safety Evaluation Report Meeting
ACRS Subcommittee Action Items (DRAFT)
July 23 – 24, 2009, October 6-7, 2009, November 5, 2009, February 2-3, 2010, April 22, June 24-25, , July 21-22, Sept. 20-21, and Oct. 5, Nov. 2-3, Nov. 17-19, 2010

Revised 12/1/2010

51	Get a NRC consultant report on ASTRUM applicability evaluation (NRO provided the report after the meeting).	closed			*DNRL*	*DNRL provided report following Feb meeting. Closed*
54	~~AP1000 Containment coating issues – corrosion allowance, coating monitoring, Inspection program (ASME – ASTM requirements), RG 1.54, containment leak rate testing in relation with corrosion caused leakage. The ACRS subcommittee chairman would like to have this item on the July meeting.~~ ~~Ray~~	Closed	Chapter 6	*COL Applicant*	*COL Applicant*	*SNC discussed the programs in the July meeting. However, members asked more questions on the configurations of the containment system and shield building. Westinghouse committed to provide more information when they discuss the SB in future. New action Item was created as #60.*
58	~~Requested a report that describes the method applicant is using for the spent fuel racks criticality analysis? - Bley June Transcripts Page 13.~~	Closed	Chapter 4		*WEC*	*It will be discussed in Chapter 9* *Additional Information was provided by NRO and sent to Members in the Sept. 2010 Status CD.*
	ITEMS FROM July 2010 SC MEETINGS					
59	~~Provide Bley with copy of WCAP on setpoint control methodology~~.	Closed	Chapter 16		*WEC*	*The document* WCAP-16361 (ML061530485) *was sent to the members on 8/6/2010*
61	~~Desire by some members to review ISG-1, pertaining to coherency function and ISG-18 Reliability Assurance Program.~~	Closed	Chapter 2		*Staff*	*ISG-1 Sent to the Members on 8/6/2010.* *ISG-18 was sent to the members with the AP1000 September meeting Status CD*

66	DI&C: Harold and Charlie are requesting the staff for a follow up subcommittee meeting to present the safety concerns and considerations associated with what the staff learned from United Kingdom (UK) on: 1) Diverse Actuation System (DAS) Configuration 2) Protection and Safety Monitoring System (PMS) Common Cause Failure (CCF) Spurious 3) Component Interface Module (CIM)/DAS Diversity	Open	Chapter 7		*WEC/Staff*	
11	Aircraft Impact Assessment staff evaluation. Subcommittee wants briefing. -Ray, Banerjee	open	7/24 Chapter 19	W	DNRL	NWE1/NWE2 to arrange closed ACRS subcommittee briefing. 19F revision
	ITEMS FROM OCTOBER 2009 SC MEETINGS					
	ITEMS FROM NOVEMBER 2009 SC MEETINGS					

37	*Statistical analysis of fuel assembly tests* "Banerjee, Wallis and I requested statistical analyses of the fuel assembly tests. There were a limited number of tests, and a several experimental variables. The issue here is the statistical validity of the reported findings and conclusions of these tests." – Armijo Armijo further clarified in his e-mail on 7/1/2010, " The heart of my question was whether there was sufficient repeatability in the tests. Given the same test variables in duplicate tests, did Westinghouse get reasonably similar results"	open	GSI-191		~~*W*~~ *ACRS*	*Provide copy of report – possibly included in RAI response* *GSI-191 Test Reports sent to Sam on July 6, 2010.* *New reports were provided to Sam and Sanjoy, Sam is satisfied with the response. Need Sanjoy/Wallis's comments.*
	ITEMS FROM FEBRUARY 2010 SC MEETINGS					
46	Components MOV, POV testing, how is the risk informed and ranked. PRA is not sufficient and need to review other criteria. *-Stetkar, Shack*	open	3		*W*	*W to provide info on risk ranking*
48	Confirm 1) if there are interlocks for ADS1, 2, 3, 4 actuation and what kind of failure it can occur. 2) If it occurs, what is the impact to the safety analysis?	open			*W*	*W to provide info at future meeting*

49	Sanjoy had issues on codes: a) ASTRUM is approved for other Westinghouse PWRs, justify that it can be applied to the AP1000. What is the similarity of the AP1000 compared to the Westinghouse PWR for the LBLOCA in the initial blowdown phase? b) W/TRAC is the best estimate code. What the conservativeness was used in the Rev. 15 compared to the best estimate approach used in the Rev. 17, which lowered the PCT significantly. c) Since the certified design, what are the changes in the code? Provide a summary report. WEC responded that the main changes Error of modeling in pressurizer and hot spot. (Sanjoy)	open	Chapter 15		*W*	*W to provide info at future meeting*
50	In LOCA calculation, the collapsed liquid level in the core remains at about six feet, what is the uncertainty of the six ft in water level? (Sanjoy)	open	Chapter 15		*W*	*W to provide info at future meeting*
	ITEMS FROM APRIL 2010 SC MEETINGS					
51	Details of the plate-to-plate welds for the SC wall steel plates and how the quality of welds are assured. - Boza and Sam.	open	Chapter 3 Shield Building Design		*W*	

52	Details of the roof beam to tension ring connection.	open	Chapter 3 Shield Building Design		*W*	
53	Explanation of the pushover analysis methodology: how were the lateral and vertical forces selected, combined and applied, and how are the results of this nonlinear analysis interpreted. - Boza	open	Chapter 3 Shield Building Design		*W*	
56	How the functional requirements related ITAAC (e.g., Turbine overspeed protection) will be verified? (What process will be used to verify the requirements). How does ITAAC for turbine overspeed protection diversity, independence, and redundancy get written to adequately inspect computer hardware and software. There was interest in any failure experience with monoblock turbine rotors, and seeking more info about how active sensors function. (june transcripts Page 187-191) Provide RAIs on the subject. - Brown	Open	Chapter 10	*W/COL*	*W*	*TR86 and RAI*-SRP10.2-SBPA-02 *were sent to members. Brown provided additional comments and they were passed to the NRO staff.*

57	In Chapter 12 presentation, Mr. Roach stated: "the plants or facilities have had issues with that ventilation or contamination going into their ducting, that exhaust port was very close to the water level within a couple of feet, in the AP 1000 the exhaust is up approximately 10 - 12 feet above the water level." Member Brown requested a justification of 12 feet above the water level. (June Transcripts, page 26)	open	Chapter 12	*DCD*	*NRO*	
62	Consultant William Hinze suggested that the staff's safety evaluation review be updated qualitatively to reflect the findings in the U.S. Geological Survey Open-file Report 2008-1128 [Documentation for the 2008 Update of the United States National Seismic Hazards Maps] by M. Petersen et al. which has superseded the 1996 and 2002 U.S. Geological Survey reports that have been previously reviewed in the V.C. Summer FSAR. The NRC staff's safety evaluation revision should reflect the description of the U.S. Geological Survey]s 2008 seismic hazard model including a comparison of key parameters of this model to the V.C. Summer seismic model.	open	Chapter 2		*Summer*	Bill produced a meeting report for the subcommittee with comments.
63	~~South Carolina Electric and Gas provides the detailed calculation associated with the following: 1) train car release of toxic gas and its effects on control room habitability, and 2) offsite explosive hazards analysis that was done to support the conclusion that such a hazard does not pose a threat to the proposed VC Summer Units 2 and 3.~~ 3) Staff's confirmatory calculations (Sanjoy).	Closed for Part 1 and 2	Chapter 2		*Summer*	*4 reports were received and three of them were sent to the members by e-mail on 8/12. Due to its size, the last one will be add to a CD for members to review.*

64	When the hydrogen is replenished, you bring some sort of a truck onsite. Is there an additional hazard as far as the amount of hydrogen at that time or would that be handled with the COLA? - Sam, Transcripts page 22.	Open	Chapter 2		*Vogtle COLA*	
	ITEMS FROM Sept. 2010 SC MEETINGS					
65	In D I&C, Charlie is concerned about watch dog timer. What will happen to the other divisions and what is the end result when process overload and corrupted data occur.	Open	Chapter 7		*WEC/Staff*	*This is a new item to replace the old Item #32.*
67	Harold- question about the TSC, what is the effect of the consolidation of the unite 1&2 TSC into the new TSC serving unites 3&4	open	Chapter 18		*WEC/Staff*	
	ITEMS FROM Oct. 2010 SC MEETINGS					

68	1) What are the lowest flows calculated by COBRA/TRAC for various accident scenarios using the same debris loading as is used for the DVI break calculations? (2) How do numerical (nodalization and time-step) convergence tests affect the oscillations seen in the COBRA/TRAC calculations? (3) Do DEDVIGB breaks lead to the lowest driving head conditions? Are there other accident scenarios (e.g., some cold leg breaks) that lead to lower driving heads due to incomplete filling of the downcomer? (4) If the bed resistance is made a function of velocity as seen in the experiments, how are the oscillations and the average flows and pressure losses affected? (5) If the bed resistance is made a function of flow rate through the debris beds formed, then do these effects change the worst-case scenarios? Does such a flow-dependent bed resistance parameterization lead to lower flows than would be calculated with a constant bed resistance for the worst-case scenarios?	open	Chapter 6		*WEC/Staff*	*Reworded after Nov. 4 Full Committee Meeting*

69	(1) What is the margin between the worst-case COBRA/TRAC calculations presented and the flow that would lead to dry-out? In other words, how much would the debris bed loss factor have to be increased in order to lead to dry-out? (2) At what quality would dry-out be expected at the decay heat levels used to generate the table of COBRA/TRAC results presented by the staff? (3) What is the low-pressure, low-flow CHF correlation used in COBRA/TRAC?	open	Chapter 6		*WEC/Staff*	*Reworded after Nov. 4 Full Committee Meeting*
70	1) What happens to boron concentration levels and deposition in the event of dry-out? (Addressed in November Full Committee meeting. Need explicit reference.) (2) What are the conditions in outlet quality and flow rate at which boron precipitation becomes a concern?	open	Chapter 6		*WEC/Staff*	*Reworded after Nov. 4 Full Committee Meeting*

71	How sensitive are the debris bed head loss to: (1) Flow rate (2) Fiber characteristics (3) Fiber loading (4) Chemical loading (5) Testing protocols	open	Chapter 6		*WEC/Staff*	*Reworded after Nov. 4 Full Committee Meeting*

Attachment 4

AP1000 Design Control Document
Tier 2 Chapter 3
Design of Structures, Components, Equipment, and Systems

AP1000

November, 2010

Westinghouse

Tier 2 Chapter 3

- Chapter Overview
  - General Design Criteria
  - Classification of Structures, Components, and Systems
  - Wind and Tornado Loadings
  - Water Level (Flood) Design
  - Missile Protection

Tier 2 Chapter 3

- Chapter Overview (continued)
  - Postulated Pipe Rupture Dynamic Effects
  - Seismic Design
  - Design of Category I Structures
  - Mechanical Systems and Components
  - Seismic and Dynamic Qualification
  - Environmental Qualification

3.2 Classification of Structures, Components, and Systems

- The classification approach is not changed in the DC amendment
- The classification details are changed to reflect design finalization
- Open Items were a result of NRC audit and review of design documents - These open items are resolved.

3.2 Classification of Structures, Components, and Systems - Open Items

Attachment 4

Item	Subject	Status/Comments
OI-SRP3.2.1-EMB2-01	Seismic Requirements for Class D Systems	Closed - Use of seismic anchorage is consistent with SECY-96-128
OI-SRP3.2.1-EMB2-02	Seismic Classification for Electrical and other Equipment not in Table 3.2-3	Closed - Table 3.11-1 provide seismic classification of electric and instrumentation equipment
OI-SRP3.2.1-EMB2-03	Augmented QA for SC II SSCs	Closed – DCD revised to reference DCD 17.3 for augmented quality requirements for seismic Category II SSCs and pertinent portions of 10 CFR 50 Appendix B.
OI-SRP3.2.1-EMB2-06	SSCs Required for continued operation	Closed - DCD Subsection 3.2.1.1 revised to reference Appendix S. Regulatory Guide is not applicable to the design certification
OI-SRP3.2.2-EMB2-01	Supplemental Requirements for risk significant RTNSS Systems	Closed - AP1000 RTNSS SSCs apply quality standards commensurate with the importance of their safety functions
Correction of Table 3.2-3	From extent of condition	FPS Classification corrected.

3.3.Wind and Tornado Loadings
3.5 Missiles

- Impact of tornado borne automobile missile at higher elevations is included to support COL applicants
- Open Items were the result of design changes (radwaste tanks) and NRC review (automobile and siding missiles) – These items resolved

3.3.Wind and Tornado Loadings – 3.5 Missiles Open Items

Attachment 4

Item	Subject	Status/Comments
OI-SRP3.3.2-SEB1-01	Impact of steel siding missile on the modular wall of the shield building	Closed - Structural integrity of the Seismic Category I structures will not be compromised from the siding missile strikes
OI-SRP3.7.2-SEB1-02	Effect of 3 added radwaste tanks on collapse of Radwaste Building	Closed - Tanks will not become a tornado born missile
RAI COL03.05.01.04-1	Elevated automobile	Closed – NI Structure demonstrated to be not subject to global failure due to sliding and overturning at the base by impact of an automobile.

3.4 Water Level (Flood) Design

- Open items resulted from design changes
  - Roof design of seismic Category II structures altered,
  - Fire tank volume increased,
  - Radwaste tanks added to Radwaste Building.
- These items resolved

3.4 Water Level (Flood) Design – Open Items

Item	Subject	Status/Comments
OI-SRP3.4.1-RHEB-01	Analysis of Parapet roof design for Probable Maximum Precipitation	Closed – Parapet Roof not on Seismic Cat. 1 Structures. The roof drain design includes no weirs.
OI-SRP3.4.1-RHEB-02	Analysis of increase in fire tank volume	Closed – Site is graded away from Nuclear Island.
OI-SRP3.4.2-SEB1-01	Hydrodynamic load of tanks in Radwaste Building	Closed – Flood level of 6 inches is insignificant load on NI walls.

3.6 Postulated Pipe Rupture Dynamic Effects – 3.12 Piping

- COL Information Item added to address completion and review of piping design
- COL Information Items added to address completion and pipe rupture hazard report.
- The computer code used for piping fatigue analysis (WESTEMS) is withdrawn from review in the design certification amendment.
  - NRC Staff will evaluate piping design fatigue analysis at the time of COL item closure
  - Benchmark program is required by DCD if a piping analysis program other than those for design certification is used

3.6 Postulated Pipe Rupture Dynamic Effects COL Information item

3.6.4.1 Pipe Break Hazard Analysis

The following activity will be completed by the COL applicant:

Combined License applicants referencing the AP1000 certified design will complete the as-designed pipe rupture hazards evaluation and make design information available for NRC review. The completed as-designed pipe rupture hazards evaluation will be in accordance with the criteria outlined in subsections 3.6.1.3.2 and 3.6.2.5. Systems, structures, and components identified to be essential targets protected by associated mitigation features (reference is Table 3.6-3) will be confirmed as part of the evaluation, and updated information will be provided as appropriate.

3.9 Mechanical Systems and Components Piping COL Information Item

3.9.8.7 As-Designed Piping Analysis

The following activity will be completed by the COL applicant:

Combined License applicants referencing the AP1000 design will complete the as-designed piping analysis (DAC) for the piping lines chosen to demonstrate all aspects of the piping design. A design report referencing the as-designed piping calculation packages – including ASME Section III piping analysis, support evaluations, and piping component fatigue analysis for Class 1 piping using the methods and criteria outlined in Table 3.9-19 – will be made available for NRC review. The availability of the piping design information and design reports will be identified to the NRC. Combined License applicants may address this item in accordance with the process options for DAC/ITAAC closure outlined in Appendix 14A.

3.6 Postulated Pipe Rupture Dynamic Effects – Open Items

Item	Subject	Status/Comments
OI-SRP3.6.2-EMB2-01	• Evaluation of leakage and through wall cracks, • Complete as-designed pipe break hazards analysis report	Closed - COL information item - COL applicants referencing the AP1000 design will complete the as-designed pipe rupture hazards analysis report
OI-SRP3.6.3-CIB1-01	Review as-designed LBB analyses for other-than-hard-rock seismic input	Closed - NRC staff will review the final as-built LBB analyses results

3.9 Mechanical Systems and Components – Open Items

AP1000

Attachment 4

Item	Subject	Status/Comments
OI-SRP3.9.1-EMB1-03	Follow up WESTEMS audit	WESTEMS is withdrawn from Design Certification Review
OI-SRP3.9.1-EMB1-04	Provide guideline or criteria for developing or benchmarking transfer function stress database	WESTEMS is withdrawn from Design Certification Review
OI-SRP3.9.1-EMB1-05	Provide technical justification for this option in selecting peak and valley times for the fatigue evaluation	WESTEMS is withdrawn from Design Certification Review
OI-SRP3.9.1-EMB1-06	Provide benchmark acceptance criteria to validate the computer code calculation (WESTEMS)	WESTEMS is withdrawn from Design Certification Review
OI-SRP3.9.1-EMB1-07	Provide the configuration control and limitations of WESTEMS for an option to eliminate peak/valley points	WESTEMS is withdrawn from Design Certification Review

Westinghouse

3.9 Mechanical Systems and Components 3.9.2, 3.9.3, and 3.9.4

- NRC Open items generated by the review of design documents are resolved.
  - Flow Skirt Vortices
  - CRDM Nozzle J-Groove weld
  - Recirculation Screen loads
- International CRDM classification questions resolved.

3.9 Mechanical Systems and Components – Open Items

Item	Subject	Status/Comments
OI-SRP3.9.2-EMB1-07	Potential for generation of vortices in the region of the flow skirt	Closed - Any vortices generated will therefore be too small
OI-SRP3.9.3-EMB2-05	ASME Code Requirements for reactor vessel J-Groove weld	Closed - Westinghouse completed a plastic analysis and revised design documents
OI-SRP3.9.3-EMB2-08	Address issues with Containment Recirculation Screens design specifications	Closed - Updated design documents to include loads on screens

3.9 Mechanical Systems and Components – Open Items

Item	Subject	Status/Comments
RAI-SRP3.9.4-EMB1-01	Seismic classifications of the CRDM latch mechanism and coil stack assembly	Safety analyses do not rely on latch assembly function during an earthquake.
RAI-SRP3.9.4-EMB1-02	International standards for CRDM components	Design, fabrication and quality assurance requirements for the CRDM latch assemblies are the same for U. S. and international applications.

3.9 Mechanical Systems and Components Valve Testing

- Open items for valve in-service testing and functional testing are resolved.
  - Resulted from NRC Audit
  - AP1000 is implementing testing required by Joint Owners' Group MOV program
  - Additional information provided in response to ACRS Action Item 46

Westinghouse

3.9 Mechanical Systems and Components – Open Items – 3.9.6

Item	Subject	Status/Comments
OI-SRP3.9.6-CIB1-01	Resolve issues from onsite review of design and procurement specifications for pumps, valves, and dynamic restraints	Closed – Follow up review verified changes to design documents.
OI-SRP3.9.6-CIB1-02	Reference to static testing needs to be consistent with the JOG MOV Program, which might require dynamic testing	Closed – DCD revised to remove reference to valves outside JOG Program.
OI-SRP3.9.6-CIB1-03	Specify the edition of the ASME Standard QME-1 referenced in Section 3.9	Closed – DCD to reference ASME QME-1-2007
OI-SRP3.9.6-CIB1-04	Application of ASME OM Code Case OMN-1 as part of the AP1000 IST Program	Closed DCD specifies use of ASME OM Code Cases must be consistent with RG 1.192.

3.9 Mechanical Systems and Components – Open Items – 3.9.6

Item	Subject	Status/Comments
OI-SRP3.9.6-CIB1-05	Technical Specifications and Technical Specification Bases need to be revised to be consistent with the ASME OM Code	Closed - Technical Specifications and Technical Specification Bases to be revised to be consistent with the ASME OM Code
OI-SRP3.9.6-CIB1-06	Include Acceptance Criteria for Check Valve and clarify response to RAI-SRP3.9.6-CIB1-12	Closed – Revise DCD to include check valve test acceptance criteria
OI-SRP3.9.6-CIB1-07	Clarify Table 3.9-16 Note 31 be consistent with the JOG MOV periodic verification program	Closed – Revise Note 31 in Table 3.9-16 to be consistent with the JOG MOV periodic verification program
OI-SRP3.9.6-CIB1-08	Clarify the reference to ASME OM Code, Subsection ISTC-3700 to confirm that the exercise test frequency requirements specified in the ASME OM Code will be satisfied	Closed - Revised DCD Table 3.9-16 to indicate a separate Fail Safe test for the applicable valves with fail safe functions

3.9 Mechanical Systems and Components – Open Items – 3.9.6

Attachment 4

Item	Subject	Status/Comments
OI-SRP3.9.6-CIB1-09	Address issues about testing for CVS valves	Closed - Revised DCD table as requested.

Westinghouse

3.10 Seismic and Dynamic Qualification
3.11 Environmental Qualification

- Screening of equipment for sensitivity to high frequency motion is discussed in DCD Appendix 3I
- RAIs on screening for equipment sensitive to high frequency motion and conformance with COL/DC-ISG-1 have been resolved.
- The open item on equipment qualification requirements in design documents is resolved.

3.11 Environmental Qualification – Open items

Item	Subject	Status/Comments
OI-SRP3.11-CIB1-01	Revise design and procurement specifications to address NRC audit comments on equipment qualification	Closed - Valve design specifications require that active valves will be qualified in accordance with ASME Standard QME-1-2007

ACRS Questions

ACRS Actions 4, 46, and 55

ACRS Action 46
Valve Testing Risk Ranking

AP1000

Attachment 4

Components MOV, POV testing, how is the risk informed and ranked. PRA is not sufficient and need to review other criteria.

- The risk ranking of valves to determine the frequency for valve operability testing is a COL responsibility
- The DCD includes a COL information item that the COL applicant must complete an evaluation to determine the frequency of valve operability testing.
  - This evaluation will include risk ranking.
  - The DCD also includes a description of the evaluation to be completed to determine the frequency.
- Risk ranking is not completed as part of the design certification.

Westinghouse

ACRS Action 46
Valve Testing Risk Ranking

- The determination of valve operability test frequency uses a combination of functional margin and risk ranking.
  - High risk, low margin → more frequent
  - Low risk, high margin → less frequent
- Valve margin evaluates load on actuator and capability of actuator.

ACRS Action 46
Valve Testing Risk Ranking

AP1000

Attachment 4

- In response to NRC Generic Letter GL 96-05, the Westinghouse Owners Group prepared a report on the risk ranking approach for the existing fleet.
- The approach identified in the report includes six steps
  1. Identify valves to be considered
  2. Calculate valve at-power risk importance
  3. Assess PRA completion issues
  4. Evaluate other considerations
  5. Develop component ranking worksheets
  6. Conduct expert panel session for ranking.

Westinghouse

ACRS Action 46
Valve Testing Risk Ranking

Attachment 4

- Valves subject to operability testing are identified in DCD Table 3.9-16
- Risk importance is considered based on both core damage frequency and large release frequency.
- Shutdown risk has been quantified for AP1000
- Westinghouse and AP1000 utility personnel have participated in risk ranking expert panels for the GL 96-05 responses.

ACRS Action Item 55
Squib Valve Functional Testing

AP1000

Attachment 4

Testing of Squib Valves - Verification/qualification program, IST program. - Banerjee

Details on how many tests, what's the configuration, what are the upstream pressures, and etc, aside from how do you test them once they are in service. – Brown

- The squib valve design includes functional testing, lot acceptance testing, equipment qualification testing and in-service testing.

Westinghouse

ACRS Action Item 55
Functional Testing

- The design and development program includes functional testing of the design at the extreme conditions. Variables include propellant loads, material properties, environmental conditions, and machining tolerances.
- 17 tests have been completed with prototype valves with all valves opening
- Propellant loads included 80% of nominal, 120 % of nominal, and higher
- Tests were done with air at ambient and water at ambient and at pressures up to 450 PSI.
- Shear cap thicknesses include nominal, minimum, and maximum.
- Tension bolts at minimum and maximum break strength were included.

ACRS Action Item 55
Squib Valve Functional Testing

Attachment 4

- Lot acceptance testing (LAT) is required of the production lots of critical one time use valve internal parts (shear caps and tension bolts).
  - For the current production orders there are 22 full scale tests.
    - Fourteen (14) – 14” ADS Valves
    - Six (6) – 8” HP Valves
    - Two (2) – 8” LP Valves
    - These will be done with the actuator loaded at 80% of nominal.
- The actuators (charges) also have a sample size of 10% of the entire lot, including deliverables, assurance, and LAT units tested.

ACRS Action Item 55
Squib Valve In-Service Testing (IST)

AP1000

Attachment 4

- The IST Table in the DCD requires a Charge Test Fire of 20% in 2 Years
  - The squib valve charge is removed and test fired outside of valve.
  - Squib valves are not exercised for in-service testing.
  - Consistent with ASME OM requirements
- Westinghouse will provide additional in-service inspection and testing recommendations to the utilities as appropriate.
  - Recommendations are a result of the design and development activities.

Westinghouse

ACRS Action Item 55
Squib Valve Equipment Qualification

Attachment 4

- The squib valve is qualified based on the guidance provided in IEEE Std 323-1974, IEEE Std 344-1987, IEEE Std 382-1996 and ASME QME-1 2007 with referencing to the power operated valve process. This includes actuator environmental seismic and Design Basis Accident simulation, qualification of the safety-related non metallic components, valve assembly functional testing, and flow testing.
- The NRC Component Integrity Branch has audited Westinghouse general equipment qualification methodology documents and the squib valve design specification.
- NRC personnel have observed the squib valve design reviews where equipment qualification has been discussed in detail.

ACRS Action 4
RCP Flywheel Design

Attachment 4

I would like to receive stress corrosion test reports performed by W or pump supplier on the 18Cr 18Mn retainer ring material. I suspect that they have not tested this material sufficiently (if at all) to demonstrate SCC resistance in the coolant environment. Even though the ring is sealed in a Alloy 625 can, the assembly will not be inspected in service, and there will be no way of knowing whether the can will remain leak tight during service. If SCC of the retainer ring occurs, a serious accident would be likely. –Armijo

ACRS Action 4
RCP Flywheel Design

- The potential for corrosion and consequences of the 18Cr 18Mn retainer ring material is not a safety issue.
- Westinghouse has reviewed industry testing and is not planning any more testing of the retainer ring material in support of DCD Rev. 18
  - The flywheel including the retainer ring is sealed in an enclosure to prevent exposure to reactor coolant
  - Pressure boundary criteria and requirements are applied for welding and helium leak test for the enclosure design and fabrication
  - Industry stress corrosion testing in environments more severe than reactor coolant have shown satisfactory resistance to stress corrosion cracking

ACRS Action 4
RCP Flywheel Design

- If the enclosure would leak, the worst case is a flywheel failure which would not be a safety issue
  - Flywheel missile analysis has shown tungsten inserts would be contained within the pressure boundary and would not create a LOCA
  - If the rotor would lock due to the flywheel failure, analyses have shown the integrity of the reactor coolant pump to steam generator weld and reactor coolant pump to cold leg weld would be maintained and would not create a LOCA
  - The Chapter 15 safety analysis has shown the acceptability of core cooling during a locked rotor event

ACRS Action 4
RCP Flywheel Design

- We understand that the position of the NRC staff, as documented in the Chapter 5 SER, is that the material is acceptable for the application.
  - "Since this alloy steel is not a nickel based alloy, such as Alloy 600, primary water stress corrosion cracking is not a concern. The NRC also notes that the 18Mn-18Cr alloy steel outer hub will be enclosed in a Alloy 625 flywheel enclosure to prevent the outer hub from contacting the reactor coolant. Therefore, the staff finds the use of the 18Mn-18Cr alloy steel acceptable based on the current operating experience of this material in an aggressive stress corrosion environment,"

Questions

Attachment 4

U.S.NRC

United States Nuclear Regulatory Commission

Protecting People and the Environment

Presentation to the ACRS Subcommittee

Westinghouse AP1000 Design Certification Beyond Amendment (Revision 17) Application Review

Advanced Final SER

Section 3.9.1 – Special Topics for Mechanical Components
Section 3.12 – Piping Design
Appendix 3I – Evaluation for High Frequency Seismic Input

November 17, 2010

Robert Hsu and John Wu

NRO/DE/EMB2

Attachment 4

Staff Review Team

- Technical Staff
  - Robert Hsu
  - John Wu
- Project Management
  - Phyllis Clark

Attachment 4

Overview of AP1000 DCD

DCD SECTION - SUMMARY OF CHANGES

DCD SECTION		SUMMARY OF CHANGES
3.9.1	Special Topics for Mechanical Components	• Remove WESTEMS Computer Program
3.12	Piping Design	• Add piping DAC and DAC/ITAAC closure process
Appendix 3I	Evaluation for High Frequency Seismic Input	• Revise the sample to be evaluated for the piping systems

Technical Topics of Interest, AP1000 DCA

3.9.1 Special Topics for Mechanical Components

- **WESTEMS Computer Code**
  - **Five Open Items addressing concerns with the quality assurance and methodology used in the WESTEMS Code**
  - **Staff completed audits and identified continuing concerns with quality assurance and methodology resulting in two remaining open items. The staff documented its audit results in the WESTEMS audit summary report.**
  - **By letter dated September 29, 2010 (ML1027703290), Westinghouse determined to remove WESTEMS from DCD markup that adds WESTEMS to DCD Table 3.9-15.**
  - **On the basis that the applicant will not apply the current version WESTEMS for AP1000 design analysis, the staff closed OIs.**

Technical Topics of Interest, AP1000 DCA

3.12 Piping Design

- **By letters dated April 1, 2010 (ML100970364) and August 23, 2010 (ML102380040), , the applicant stated that Westinghouse would not remove piping DAC and provide a DAC/ITAAC closure process.**

- **On the basis that the piping DAC was approved in Rev. 15 and the additional clarification provided with the DAC/ITAAC closure process, the staff finds this acceptable.**

Technical Topics of Interest, AP1000 DCA

3.12 Piping Design

- **Hard Rock High Frequency (HRHF) Ground Motion Response Spectra (GMRS) Exceedance Seismic Input**
  - **Seismic input was identified in Section 3.7.3 as inadequate due to a mathematical model error.**
  - **The applicant revised TR-115, "Effects of High Frequency Seismic Content on SSCs", with adequate seismic input.**
  - **The staff reviewed TR-115 and noted that the applicant's screening criteria selection did not address response spectra exceedance due to in structure response spectra (ISRS), which is the input for mechanical components and piping design analysis and qualification.**
  - **By letter dated August 17, 2010 (ML 102350447), the applicant revised DCD Appendix 3I to evaluate HRHF GMRS for all ASME Class 1, 2, and 3 piping systems instead of 2 sample piping systems. This evaluation is within the scope of the piping DAC.**
  - **On the basis that the applicant will address seismic evaluations for all Class 1, 2, and 3 piping systems, the staff finds this acceptable.**

Attachment 4

United States Nuclear Regulatory Commission

Protecting People and the Environment

Presentation to the ACRS Subcommittee

Westinghouse AP1000 Design Certification Beyond Amendment (Revision 17) Application Review

Advanced Final SER Section 3.10

Seismic and Dynamic Qualification of Mechanical and Electrical Equipment

November 17, 2010

Pei-Ying Chen

NRO/DE/EMB2

Attachment 4

Staff Review Team

- Technical Staff
  - Pei-Ying Chen
- Project Management
  - Phyllis Clark

Attachment 4

ACRS Subcommittee Presentation AP1000 Design Certification Review

Section 3.10 – Seismic and Dynamic Qualification of Equipment

Summary of Major Changes from DCD Revision 15 to DCD Revision 17

- Westinghouse decided not to use Experience – Based Qualification Method for Seismic Qualification of AP1000 mechanical and electrical equipment

- Appendix 3I.6.4 of AP1000 DCD Revision 17 addresses the Certified Seismic Design Response Spectra (CSDRS) exceedance in high frequency spectrum region at some Central and Eastern United States rock sites.

CSDRS High Frequency Exceedance

- Staff Guidance: SRP Section 3.10, COL/DC – ISG-1, and SECY – 93-087

- Resolution of RAIs on the Review of APP-GW-GLR-115 (TR-115) is directly applicable to DCD Appendix 3I for high frequency issues

- One significant RAI issue – Westinghouse did not perform, in addition to the HRHF SSE screening test, low level testing (5 OBEs) for equipment identified as potentially sensitive to HRHF excitation.

CSDR High Frequency Exceedance (continued)

- Westinghouse provided the calculations to justify that equipment testing for AP1000 CSD ISRS is equivalent to or envelops the five one-half SSE events using the AP1000 HRHF ISRS, that resolves the 5-OBE issue (to be incorporated into the future DCD revision – CI-SRP3.10-EMB-10).

- **RAI-SRP3.10-EMB-11 (On TR115, Revision 2)**

  Some equipment GMRS-based (HRHF) ISRS is higher than previously evaluated for the exceedance over the CSDRS-based ISRS. Westinghouse was requested to demonstrate the seismic adequacy of all AP1000 mechanical and electrical equipment.

- Regulatory Basis: GDC 2, SECY-93-087 and ISG-1

CSDR High Frequency Exceedance (continued)

- **Westinghouse Response**

  Appendix 3I of AP1000 DCD, Revision 17

  - Category 1 equipment (potential HF sensitive) – In addition to CSDRS seismic qualification testing, HRHF screening test will be performed.
  - Category 2 equipment (not HF sensitive) – Only CSDRS seismic qualification testing is performed.

  - Not clear how Westinghouse is going to qualify Category 2 equipment if the GMRS-based ISRS exceeds the CSDRS-based ISRS to satisfy ISG-1 and requirements of GDC 2.

CSDR High Frequency Exceedance (continued)

- **Regulatory Guidance (Section 3.2.2 of ISG-1)**

  In the evaluation of SSCs other than HF sensitive equipment, for those cases where the GMRS-based ISRS exceed the CSDRS-based ISRS below 50 Hz, further structural integrity and functionality evaluations are required.

- **Path to Resolution**

  Westinghouse agreed to revise its RAI response, Appendix 3I, and TR115 Revision 2, to verify the adequacy of the equipment seismic qualification for all AP1000 equipment for entire frequency range of interest, including mid and low frequency range exceedance. (CI-SRP3.10-EMB-11). Example:

Attachment 4

CSDR High Frequency Exceedance (continued)

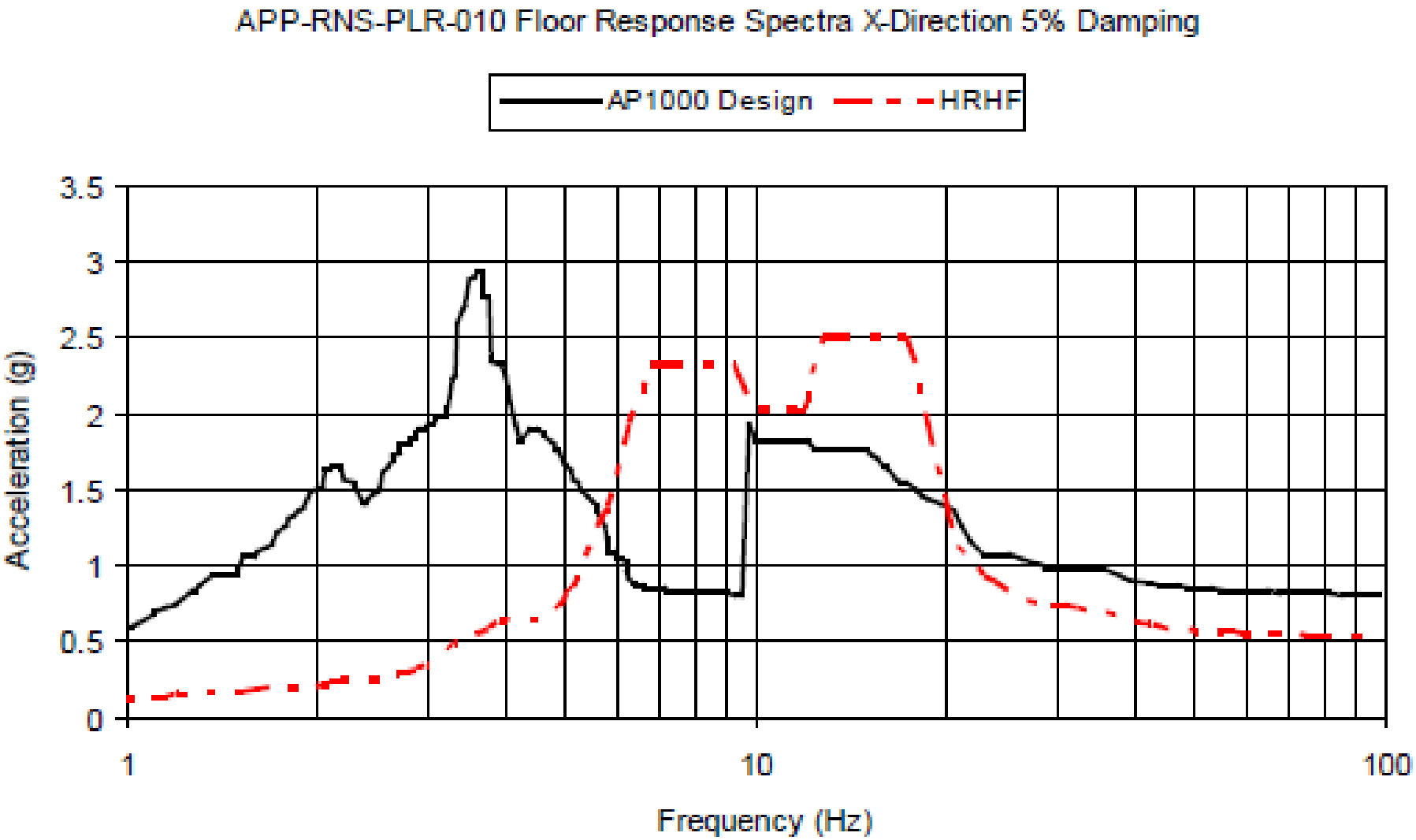

ACRS Subcommittee Presentation AP1000 Design Certification Review

Section 3.10 – Seismic and Dynamic Qualification of Equipment

Conclusions

- Changes from DCD Revision 17 and TR115 Revision 2 are acceptable subject to Confirmatory Items CI-SRP3.10-EMB-10 and CI-SRP3.10-EMB-11, because the AP1000 mechanical and electrical equipment are seismically qualified for the entire frequency range of interest.

Attachment 4

Chapter 23 Review Team

Technical Staff

- **John Budzynski**, Technical Reviewer, SRSB/DSRA
- **Hien Le**, Technical Reviewer, CTSB/DCIP
- **Michelle Hayes**, Technical Reviewer, SPCV/DSRA

Project Manager

- **Brian Anderson**, Project Manager, NWE1/DNRL

Chapter 23 Overview

- Not previously issued as an SER with open items.
- Evaluates most of the proposed design changes that were submitted subsequent to DCD, Revision 17 and that satisfy one or more of the criteria of Interim Staff Guidance 11 (ISG-11).
- ISG-11, in part, describes categories of design changes that should not be deferred until after the issuance of the design certification rule.
- Categories of those changes include:
  - correction of significant errors
  - changes to ensure compliance with NRC regulations
  - changes to support other licensing-basis documents
  - significant technical corrections associated with the design
  - changes needed to address significant vulnerabilities identified by probabilistic risk assessments or other studies

Section 23.L – Changes to Passive Core Cooling System Injection Lines

- Proposed design changes address gas intrusion concerns

- Design changes include:
  - Addition of manual vent valves and manual drain valves
  - Addition of pipe stubs and remote gas void indications
  - Re-routing of accumulator discharge line connections
  - Revision of Technical Specifications 3.5.6, 3.5.7, and 3.5.8 for controls of operations of the IRWST in operating Modes 1- 4 and shutdown Modes 5 and 6

Attachment 4

Section 23.L – Changes to Passive Core Cooling System Injection Lines

Component	Number Added	Location
manual maintenance vent valves	**8**	6 passive injection and recirculation line piping high point locations
pipe stubs	**4**	-line routing to tee into CMT vent line routing to the RCDT -outlets of each of the IRWST passive injection squib valves
manual maintenance drain valves	**20**	-14 PXS passive injection and recirculation piping locations -5 RNS piping locations -1 RCS piping location Note: RNS & RCS not related to gas intrusion

Section 23.L – Changes to Passive Core Cooling System Injection Lines

The staff's evaluation of these proposed design changes assessed:

- Proposed placement of high point vents and low point drains
  - P&IDs against pipe routing isometrics
- Identify gas intrusion mechanisms
  - Valve leakage & accumulator leakage (nitrogen blanket)
- Surveillance and venting procedures
  - Technical Specifications
  - Operations procedures
- Component acceptance criteria
  - GDC 2 & GDC 4
- ITAAC & Startup Testing not affected by the changes

Section 23.L – Changes to Passive Core Cooling System Injection Lines

- **Conclusions**
  - AP1000 design, testing, and NRC staff historical confirmatory testing demonstrated passive safety systems are not susceptible to any adverse effects from gas intrusion:
    - Would not significantly degrade safety system performance
    - Would not adversely impact plant safety following design basis events
  - AP1000 passive safety systems are not susceptible to the pump-related mechanisms:
    - Gas binding of suction piping
    - Destructive water hammer from rapid fluid flow changes once a pump is started

Section 23.S – Changes to the Passive Containment Cooling System

- The revised shield building increased resistance in the Passive Containment Cooling System natural circulation air flow path, resulting in the following DCD changes:
  - Lower required reactor decay heat limit for air only cooling
  - Increase spent fuel pool thermal capacity
  - Reduce minimum post-72 hour PCCWST flow rate supply to containment when plant is being refueled
- Design changes include revisions to Technical Specifications 3.3.2-1, 3.3.5-1, 3.6.7, and 3.7.9 to reflect the revised requirement for the minimum calculated reactor decay heat at Modes 5 and 6 as a result of the reduction of air flow through the Shield Building annulus

Section 23.S – Changes to the Passive Containment Cooling System

- Applicant evaluated impact of changes on qualification testing with a new Air Flow Characterization Test
- Applicant revised WGOTHIC models to demonstrate:
  - Negligible impact to design basis LOCA and Main Steam Line Break events
  - Containment pressure remains below design value for seven days with air only cooling if reactor decay heat is at or below 6 MWt
  - For beyond design basis accident event of a loss of offsite power concurrent with loss of PCS water, containment pressure remains below maximum pressure capability for 24 hours
  - Containment pressure remains well below design value for seven days following loss of power event concurrent with start of refueling when post-72 hour PCCWST flow rate supply to containment is 80 gpm

Section 23.S – Changes to the Passive Containment Cooling System

- The staff's evaluation of these proposed design changes included:
  - Audits of Westinghouse calculations
  - Confirmatory analyses using CONTAIN
    - Double-ended cold leg LOCA
    - Air Only Cooling with 6 MWt decay heat
    - Beyond Design Basis Accident 24 hour air only cooling
    - 80 gpm water flow during refueling Design Basis Accident

Section 23.S – Changes to the Passive Containment Cooling System

- **Conclusions**
  - Proposed changes are compliant with:
    - GDC 16, 38, 50
    - 10 CFR 50.47(c)(2) as it relates to design certification testing in support of a passive plant design

Attachment 4

U.S.NRC

United States Nuclear Regulatory Commission

Protecting People and the Environment

Presentation to the ACRS Subcommittee

Westinghouse AP1000 Design Certification Amendment Application Review

SER Chapter 23
Design Changes Proposed In Accordance With Interim Staff Guidance 11

November 19, 2010

Attachment 4

Chapter 23 Review Team

Technical Staff

- **Hien Le**, Technical Reviewer, CTSB/DCIP
- **Jack Zhao**, Technical Reviewer, ICE/DE
- **Michelle Hayes**, Technical Reviewer, SPCV/DSRA
- **Anne-Marie Grady**, Technical Reviewer, SPCV/DSRA
- **James Strnisha**, Technical Reviewer, CIB/DE
- **Larry Wheeler**, Technical Reviewer, SBP/DSRA

Project Manager

- **Brian Anderson**, Project Manager, NWE1/DNRL

Section 23.W – Changes to Add a Vacuum Relief System to the Containment

- Proposed design changes
  - Add a vacuum relief system to the containment to prevent external differential pressure between containment and the shield building from exceeding the design value
  - Reduce external pressure design limit from 2.9 psid to 1.7 psid
  - Add Technical Specification 3.6.10, Vacuum Relief Valves, to provide assurance these components will adequately perform their functions.

Attachment 4

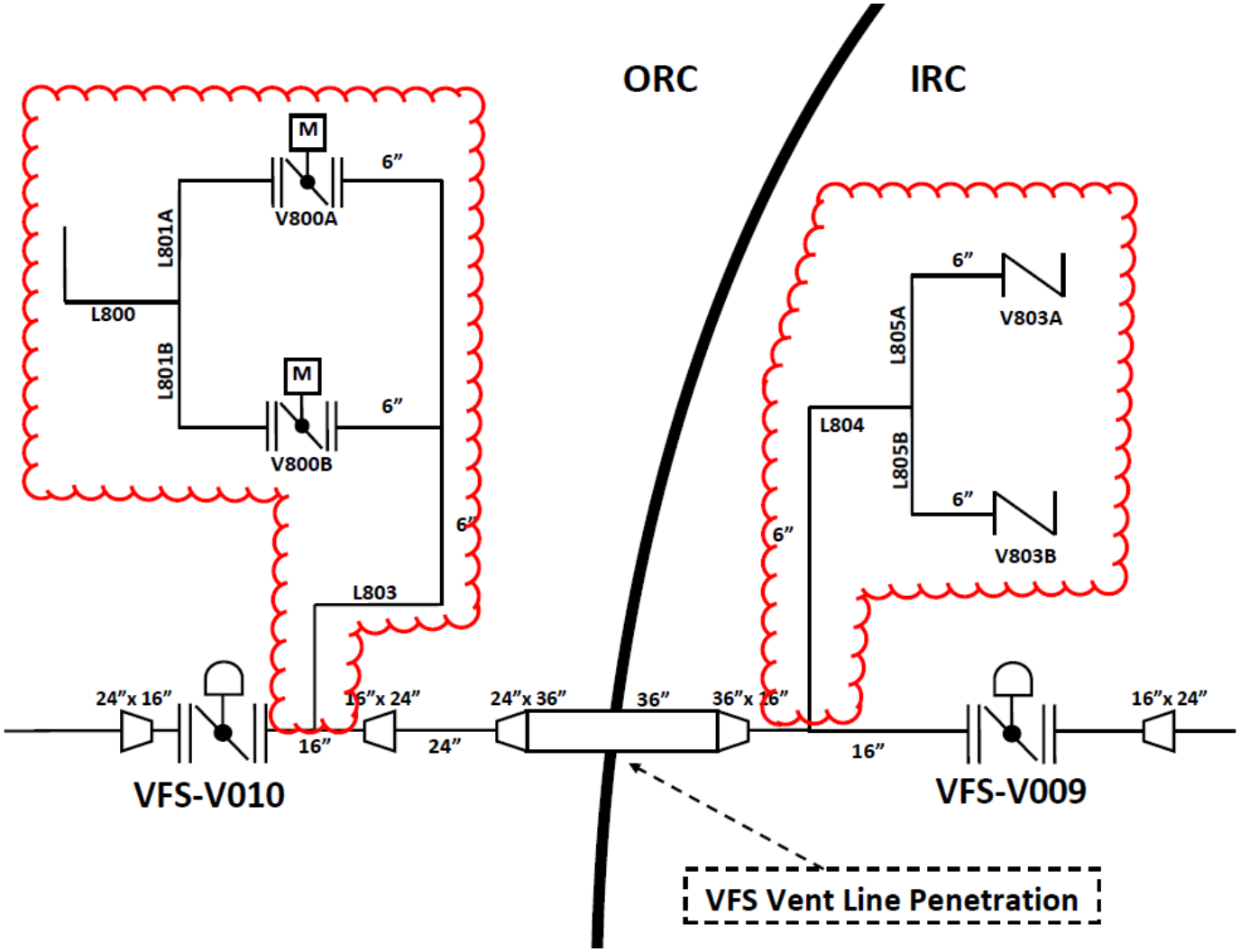

Section 23.W – Changes to Add a Vacuum Relief System to the Containment

- The staff's assessment of the proposed design changes included:
  - System Design and Analyses
  - Containment Isolation and Leak Rate Testing
  - Valve Design, Qualification, and Testing
  - Instrumentation and Control
  - Technical Specifications

Section 23.W – Changes to Add a Vacuum Relief System to the Containment

- System Design and Analyses
  - Westinghouse revised WGOTHIC model to incorporate vacuum relief system and remove non-mechanistic assumptions
  - Westinghouse analyses:
    - Demonstrated vacuum relief system maintains containment pressure within design value
    - Confirmed limiting event remains Loss of AC on cold day
  - Staff's evaluation included
    - Review of assumptions, methodology, and supporting calculations
    - Confirmatory calculations with CONTAIN model
- Staff concludes that analyses comply with GDC 16
  - Most severe transient was analyzed
  - Analysis was done in a conservative manner

Section 23.W – Changes to Add a Vacuum Relief System to the Containment

- Containment Isolation and Leak Rate Testing
  - Vacuum relief design has two flow paths which connect directly with the containment atmosphere and penetrate the primary containment
  - This design complies with the requirements of GDC 56 by providing each vacuum relief device with a check valve inside containment and a motor operated butterfly valve outside containment
  - This design complies with the 10 CFR 50.34(f)(2)(xiv)(B) redundancy requirement. If a check valve failed to close during an accident, the MOV in series with it would close on a “T” signal, thereby providing containment isolation

Section 23.W – Changes to Add a Vacuum Relief System to the Containment

- Containment Isolation and Leak Rate Testing
  - On the basis of its review of the containment isolation design of the proposed vacuum relief design, the staff concludes that the design complies with the acceptance criteria in Section 6.2.4 of the SRP, including 10 CFR 50.34(f)(2)(xiv), “Additional TMI-Related Requirements,” and the CSB BTP 6-4, "Containment Purging During Normal Plant Operations”
  - On the basis of its review the staff concludes that the proposed addition of the vacuum relief valves to the already certified AP1000 containment leakage rate testing program complies with the acceptance criteria of Section 6.2.6 of the SRP

Section 23.W – Changes to Add a Vacuum Relief System to the Containment

- Valve Design, Qualification, and Testing
  - Butterfly Valves VFS-PL-V800A/B
    - 6-inch butterfly valve with offset disc
    - Motor-operated from separate Class 1E battery source
    - Capacity coefficient and stroke time for full flow capacity
    - Will be qualified in accordance with ASME QME-1-2007 per RG 1.100 (Rev. 3)
  - Check Valves VFS-PL-V803A/B
    - 6-inch horizontally installed check valve with swing disc
    - Open at preset differential air pressure
    - Valve flow capacity
    - Will satisfy ASME BPV Code, Section III, Subsection NC-7000 for vacuum relief valves

Section 23.W – Changes to Add a Vacuum Relief System to the Containment

- Valve Design, Qualification, and Testing
  - ITAAC
    - AP1000 DCD Tier 1, Section 2.2.1, “Containment System,” will be revised to include butterfly valves VFS-PL-V800A/B and check valves VFS-PL-V803A/B
    - Table 2.2.1-3 specifies ITAAC for the containment system, and will be revised to specify butterfly valve closing time
    - Table 2.7.6-2 for the containment air filtration system will include new ITAAC for butterfly valve opening time
  - Conclusions
    - Design and qualification for butterfly valves VFS-PL-V800A/B and check valves VFS-PL-V803A/B meet ASME BPV Code and ASME QME-1-2007 per RG 1.100 (Rev. 3)
    - Valve IST activities meet 10 CFR 50.55a and ASME OM Code

Section 23.W – Changes to Add a Vacuum Relief System to the Containment

- Instrumentation and Control
  - Functional logic added to Protection and Safety Monitoring System to automatically control the two new vacuum relief MOVs
  - Manual control function and status indication in main control room also added for the two new vacuum relief MOVs
  - The staff concludes that the proposed changes comply with relevant requirements in GDC 13, 19, 20, and 21

Section 23.W – Changes to Add a Vacuum Relief System to the Containment

- Technical Specifications
  - Addition of a Low-2 containment pressure trip function to TS Table 3.3.2-1 for opening of the motor-operated vacuum relief valves
  - Addition of TS 3.6.10 for controls of the Vacuum Relief System
  - Revision to TS 3.6.4 and TS 3.6.5 in support of the new TS 3.6.10 requirements
  - On the basis of its review, the staff concludes that technical specifications are adequately addressed

Attachment 1

Section 23.V – Changes to the Component Cooling Water System

- Proposed design changes to CCS piping arrangement and isolation signals to prevent a tube rupture in the RCP cooling water heat exchanger from overpressurizing CCS outside of containment

- Design changes include:
  - Modification of CCS piping
  - Modification of containment isolation valve closure logic
  - Addition of Technical Specification 3.3.2 ESFAS instrumentation function to provide CCS isolation inside containment in the event of a heat exchanger tube leak
  - Modification of RCP heat exchanger outlet isolation valve closure logic

Section 23.V – Changes to the Component Cooling Water System

- Modifications to CCS piping
  - Addition of two 4-inch x 6-inch ASME safety-class relief valve (CCS-PL-V270 and CCS-PL-V271) on the 10-inch CCS supply and return lines, respectively; just inside the innermost containment isolation valves
  - Changed the pipe safety class between the innermost containment isolation valves and the Appendix J test valves (CCS-PL-V214 and CCS-PL-V216) from Class ‘0’ to Class ‘C’ to ensure that the relief valves are installed as ASME safety-class piping

Section 23.V – Changes to the Component Cooling Water System

- Modification to the closure logic for CCS motor-operated containment isolation valves CCS-PL-V200, CCS-PL-V207, and CCS-PL-V208
  - Additional closure on generation of the RCP bearing water high temperature pump trip signal
    - Addition of an RCP bearing water temperature high signal for closure of CCS containment isolation valves to Technical Specifications Table 3.3.2-1
  - Derived from a 2 out of 4 of the four divisions of high RCP bearing water temperature for any reactor coolant pump
  - Additional closure logic implemented in the protection and safety monitoring system

Attachment 1

Section 23.V – Changes to the Component Cooling Water System

- Modification to CCS RCP Heat Exchanger outlet isolation valves (CCS-PL-V256A/B/C/D)
  - Removal of automatic closure logic (based on high delta of inlet to outlet flow) from the nonsafety-related plant control system, but manual control from main control room is retained
  - High delta flow between the inlet and outlet lines would generate a flow deviation alarm to alert plant operators
  - New alarm indicates RCS leak conditions; upon which operators would close the valve on the cooling water outlet line on each RCP
  - Flow signals and outlet isolation valves are nonsafety-related

Attachment 1

Section 23.V – Changes to the Component Cooling Water System

- Conclusions
  - CCS piping system is adequately protected from over-pressurization due to a postulated RCP external heat exchanger tube rupture
    - Two ASME Section III Class 3 relief valves
    - Both relief valves would see the overpressurization event
    - Limits CCS to ~200 psig
  - Containment isolation valves close on sensed RCP high bearing water temperature
    - Staff RELAP analyses confirm containment isolation valve closure within AP1000 piping classification of 300 F/230 psig (JCB & JCC)
    - Containment isolation valve closure occurs within a few minutes with RCS near 200 F

Attachment 1

Section 23.V – Changes to the Component Cooling Water System

- Conclusions
  - During a postulated RCP external heat exchanger tube rupture, the proposed design meets all applicable NRC regulations
  - Will not adversely affect safety related SSCs
  - CCS will still perform defense in depth and RTNSS functions
  - Technical Specifications are adequately addressed
  - Provides new containment isolation signal
  - Maintains containment integrity
  - Prevents Inter System LOCA

Acronyms

- CCS - Component Cooling Water System
- CMT - Core Makeup Tank
- ESFAS - Engineering Safety Feature Actuation System
- IRWST - In-containment Refueling Water Storage Tank
- PCCWST - Passive Containment Cooling Water Storage Tank
- PXS - Passive Core Cooling System
- RCDT - Reactor Coolant Drain Tank
- RCS - Reactor Coolant System
- RNS - Normal Residual Heat Removal System
- RTNSS - Regulatory Treatment of Non Safety Systems
- VFS - Containment Air Filtration System

Attachment 4

ACRS Meeting
AFSE 23.W – CN 74
AP1000 Containment Vacuum Relief System

November 2010

Chuck Brockhoff Nuclear Systems Design

Gary Sedlacek HVAC Systems Design Lead

AP1000™

Westinghouse

Vacuum Relief Piping Arrangement

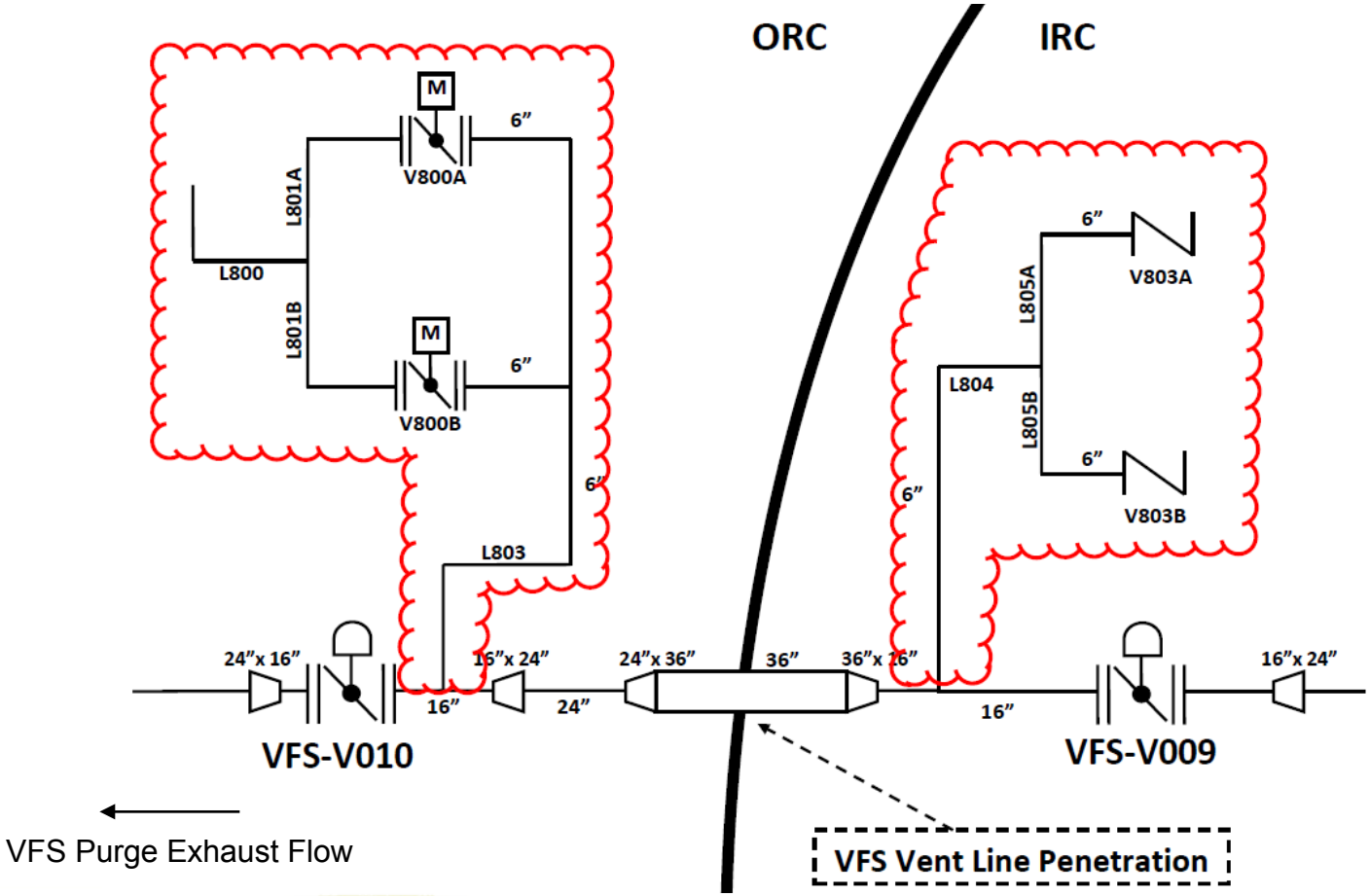

AP1000™

Addition of a Vacuum Relief System

- A containment overcooling event was identified which required the addition of a safety-related containment vacuum relief system

- Added redundant safety-related 6-inch vacuum relief valves that share a flow path through the existing VFS containment purge exhaust penetration
  - Satisfies ASME Code Section III Division 1 NE-7152 (Vacuum Relief Devices)
  - Added new Tech Spec 3.6.10 (similar to NUREG-1431 Tech Spec 3.6.12)
  - Added 2 MOV butterfly valves <u>outside</u> Containment and 2 check valves <u>inside</u> containment (active valves require in-service testing per DCD 3.9.6)
  - Automatically open MOVs from Class 1E batteries on low containment pressure (safeguards actuation requirements added to Tech Spec 3.3.2)
  - Vacuum relief actuation has priority over containment isolation
  - DBA is a cold front that overcools containment (trip / loss of ac limiting)
  - The CV design external pressure is determined to be -1.7 psig (Service Level A/D)
  - Valve arrangement similar to current plants [CE 2-loop/ W 2-loop]

- Evaluated Transient Analyses / System Design / ASME Code / CV shell design

Westinghouse