WBN2Public Resource

From: Clark, Mark Steven [msclark0@tva.gov]
Sent: Monday, April 11, 2011 1:28 PM
To: Poole, Justin; Alvarado, Rossnyev
Subject: WINCISE EDCR Excerpts Part 2
Attachments: EDCR 52321-A Excerpts Part 2.pdf

Last part. I think what is here will help.

Regards,

Steve

Steve Clark
Bechtel Power Corp.
Control Systems
Watts Bar 2 Completion Project
Phone: 423.365.3007
e-mail: msclark0@tva.gov

From: Clark, Mark Steven
Sent: Monday, April 11, 2011 1:27 PM
To: 'Poole, Justin'; 'rossnyev.alvarado@nrc.gov'
Subject: WINCISE EDCR Excerpts Parts 1

Rossnyev/Justin:

Part 1 of 2. Too large to send otherwise. Please send your question so we can get it to Westinghouse.

Regards,

Steve

Steve Clark
Bechtel Power Corp.
Control Systems
Watts Bar 2 Completion Project
Phone: 423.365.3007
e-mail: msclark0@tva.gov

From: Clark, Mark Steven
Sent: Monday, April 11, 2011 11:32 AM
To: 'Poole, Justin'; 'rossnyev.alvarado@nrc.gov'
Subject: Attachment_1.pdf - Adobe Acrobat Standard

Regards,

Steve

Steve Clark

Bechtel Power Corp.
Control Systems
Watts Bar 2 Completion Project
Phone: 423.365.3007
e-mail: msclark0@tva.gov

Hearing Identifier: Watts_Bar_2_Operating_LA_Public
Email Number: 373

Mail Envelope Properties (7AB41F650F76BD44B5BCAB7C0CCABFAF1D93EDCC)

Subject: WINCISE EDCR Excerpts Part 2
Sent Date: 4/11/2011 1:27:31 PM
Received Date: 4/11/2011 1:28:07 PM
From: Clark, Mark Steven

Created By: msclark0@tva.gov

Recipients:
"Poole, Justin" <Justin.Poole@nrc.gov>
Tracking Status: None
"Alvarado, Rossnyev" <Rossnyev.Alvarado@nrc.gov>
Tracking Status: None

Post Office: TVANUCXVS2.main.tva.gov

Files	**Size**	**Date & Time**
MESSAGE	1181	4/11/2011 1:28:07 PM
EDCR 52321-A Excerpts Part 2.pdf	2955363	

Options
Priority: Standard
Return Notification: No
Reply Requested: No
Sensitivity: Normal
Expiration Date:
Recipients Received:

EDCR 52321-A
page 118

Table of Contents

1.0 SUMMARY 10

1.1 Incore Instrumentation System 10

1.2 Incore Thermocouple Subsystem 10

1.3 Incore Flux Mapping Subsystem 11

2.0 DESIGN CRITERIA 11

2.1 Function 11

2.1.1 Safety Function 11

2.1.2 Normal Operating Function 11

2.2 Design Requirements 12

2.2.1 Seismic Requirements 12

2.2.2 Natural Phenomena Protection 12

2.2.3 Pipe Rupture and Internally Generated Missile Protection Requirements 12

2.2.4 Single Failure Requirements 12

2.2.5 Environmental Qualifications 13

2.2.6 Separation, Fire Protection, and Intrazonal Protection Requirements 13

2.2.7 Electrical Power Requirements 13

2.2.8 Instrumentation and Control Requirements 13

2.2.9 Interface Requirements 16

2.2.10 Quality Assurance Requirements 17

2.2.11 Process and Operational Requirements 17

2.2.12 Codes, Standards, and Regulatory Requirements 17

2.2.13 Other Requirements 18

3.0 DESIGN DESCRIPTION - FOR INFORMATION ONLY 18

3.1 System Description and Performance Characteristics 19

3.1.1 Incore Thermocouple Subsystem 19

3.1.2 Incore Flux Mapping Subsystem 19

3.2 Equipment Description 20

3.2.1 Incore Thermocouple Subsystem 20

3.2.2 Incore Flux Mapping Subsystem 22

3.3 System Interfaces 29

3.3.1 Reactor Coolant System 30

3.3.2 Electric Power Systems 30

Table of Contents (continued)

3.3.3 Equipment and Floor Drainage System 30

4.0 SPECIAL OPERATIONS - FOR INFORMATION ONLY 30

4.1 Procedures at Refueling 30

5.0 CASUALTY EVENTS AND RECOVERY PROCEDURES 31

5.1 System Leakage 31

5.2 Failure of One Detector or Drive Unit 31

5.3 Operation Without Position Indication 32

6.0 MAINTENANCE AND TESTING COMMITMENTS - FOR INFORMATION ONLY 32

7.0 REFERENCES - FOR INFORMATION ONLY 32

7.1 Westinghouse Documents 32

7.2 TVA Documents 33

7.3 Codes, Standards, and Regulatory Guides 34

7.4 Calculations 34

7.5 Other 34

8.0 FIGURES - FOR INFORMATION ONLY 35

8.1 Distribution of Flux Thimbles and Thermocouples 35

8.2 Reactor Vessel Cross-Section Showing Incore Instrumentation System 36

8.3 Pictorial View of the Incore Neutron Flux Detector Insertion System 37

8.4 Incore Flux Detector Insertion System 38

8.5 Incore Thermocouple (Core Exit Thermocouple - CET) Cable Layout 39

Source Notes 40

Attachment 1: ABBREVIATIONS AND ACRONYMS 41

1.0 SUMMARY

1.1 Incore Instrumentation System

The Incore Instrumentation System (IIS) consists of instrumentation which is provided to monitor neutron flux distribution and fuel assembly coolant outlet temperatures at selected locations within the reactor core. This information is obtained to confirm reactor core design parameters. When the system is used in conjunction with previously determined analytical information, fission power distribution at any time during core life can be ascertained. This is of interest because the combination of fission power distribution and the thermal and hydraulic limitations determines the maximum core capacity. The IIS provides information which can be used to calculate the enthalpy distribution (Reference 7.1.1). The IIS is composed of two subsystems; the Incore Thermocouple Subsystem (ITS) and the Incore Flux Mapping Subsystem (IFMS).

Incore Instrumentations System (IIS) is being upgraded by Westinghouse to support the Watts Bar Unit 2 Construction Completion (WB2CCP) Project. Supporting vender and engineering analyses shall be completed and incorporated into this System (IIS) being declared operational [PL-08-1148].

1.2 Incore Thermocouple Subsystem

The Incore Thermocouple Subsystem consists of sixty-five (65) thermocouples which are provided and positioned to measure fuel assembly coolant outlet temperature. (See Figure 8.1 for thermocouple locations within the reactor core). Thirty-three (33) of the thermocouples are grouped and wired under Train A and thirty-two (32) under Train B. Three (3) resistance temperature detectors (RTDs), per train, are also provided to monitor the temperature of a cold reference at the integral reference junctions which are part of the containment cable assemblies, one (1) RTD per cable assembly. A total of five (5) RTDs per train are available, three (3) are connected and two (2) are spares. (See Figure 8.5 for arrangement of incore thermocouple cables inside containment.) The RTD signals along with their associated incore thermocouple signals are inputted into a microprocessor unit [one (1) per train] located in the Inadequate Core Cooling Monitoring (ICCM) cabinet which provides separate inputs to a Westinghouse Plasma Display, two 3-pen recorders and plant computer for incore thermocouple system temperature readout at the MCR. Incore thermocouple temperature readout is provided by the plant computer.

The ICCM is part of the Reactor Coolant System. Refer to N3-68-4001 (Reference 7.2.23) for detailed description.

EDCR 52321-A
page 121

1.3 Incore Flux Mapping Subsystem

~~The Incore Flux Mapping Subsystem consists of 58 incore flux thimbles which permit measurement of the axial neutron flux distribution within the reactor core. Six movable miniature neutron detectors are available to scan the length of 58 selected fuel assemblies to provide remote reading of the axial flux distribution. (See Figure 8.1 for location of selected fuel assemblies within the reactor core). The thimbles are inserted into the reactor through thimble guide tubes mounted on the bottom of the reactor vessel. The thimble guide tubes are essentially extensions of the reactor vessel, with the thimbles allowing the insertions of the incore instrumentation movable miniature detectors. The drive system for the insertion of the miniature detectors consists basically of six drive units, 13 limit switch assemblies, six 5-path rotary transfer devices, six 10-path rotary transfer devices, and 58 isolation valves. (See Figures 8.2 and 8.3 for IFMS configuration.)~~ Replace with change #1

2.0 DESIGN CRITERIA

2.1 Function

2.1.1 Safety Function

The Incore Thermocouple Subsystem (ITS) performs a (primary) safety function during normal and post-accident operating modes by providing fuel assembly coolant temperature signals to the Inadequate Core Cooling Monitor (ICCM). This includes the thermocouples, integral reference junction RTDs and all associated cabling and connectors. The Incore Thermocouple recorders located on the MCR boards M-4 and M-6 and associated cabling from the ICCM also performs a (primary) safety-related function. (The ICCM cabinets and Plasma Display are considered a portion of the Reactor Coolant System.) The Incore Thermocouple temperature signals sent to the Plant Computer from the ICCM perform a quality related function (secondary safety function).

~~The Incore Flux Mapping Subsystem performs a quality related function except for the RCS pressure retaining portion identified below. The quality related portion includes the neutron flux detectors, drive units and controls, and the signal processing equipment.~~ Replace with change #2

The Bottom Mount Instrumentation (BMI) Thimble Guide Tubing performs a (primary) safety function. This tubing is an extension of the RCS pressure boundary and is used to provide a path of insertion for the IITAs ~~for the neutron flux detectors~~. This tubing extends from the Reactor Pressure Vessel to the seal table. Add change #3

2.1.2 Normal Operating Function

The Incore Instrumentation System shall be designed to allow correlating of ~~movable~~ neutron detector information with fixed thermocouple information to provide radial, axial, and azimuthal core characteristics. Thermocouples shall provide a backup to the flux monitoring instrumentation for monitoring power distribution. Thermocouple readings shall be used by the operator to detect reduced Reactor Coolant System flow. The ITS may be used to verify a dropped rod, rod out of alignment and flux tilts.

The PDMS ~~movable incore neutron detectors~~ shall be used for more detailed mapping if the ITS indicates an abnormality. The Incore Instrumentation System shall be designed to detect misloaded fuel after initial fuel load and each subsequent fuel load before operating at full power.

System Description Changes to WBN2-94-4003

1) **Incore Flux Mapping Subsystem (IFMS) [Reference 7.1.11]**

The Incore Flux Mapping Subsystem is composed of the Westinghouse IN-Core Instrumentation Surveillance and Engineering (WINCISE) system and the BEACON-TSM Power Distribution Monitoring System. The WINCISE system uses OPARSSEL™ Incore Instrument Thimble Assemblies (IITA), containing five Vanadium self-powered neutron detectors (SPD), to continuously measure the three-dimensional (3-D) core power distribution. The SPDs are distributed both axially and radially within the reactor core to provide continuous measurements of signals directly proportional to the neutron flux present around each SPD element. The measured SPD signals are processed to be suitable for use by the BEACON-TSM™ Power Distribution Monitoring System (PDMS) to generate continuous 3-D measurements of the reactor core power distribution.

2) The Incore Flux Mapping Subsystem performs a quality related function except for the RCS pressure retaining portion and CET signal portions identified below. The quality related portion includes the non-CET segments of MI Cable, Signal Processing System (SPS) cabinets, Application Servers, Domain Servers, BEACON servers, and associated peripherals. (See Figure 3)
3) The IITA and associated Swageloc fitting are also part of the RCS pressure boundary

Additionally, the IITA, IITA connector and MI cables containing CET signals serve a (primary) safety function by providing CET information to Common Q (PAMS).The IITA and 1-to-2 transition cable is shared between the ITS and IFMS.

2.2 Design Requirements

The Incore Instrumentation System shall be designed to operate for 40 years design plant life with normal maintenance. The Incore Thermocouple Subsystem shall be designed to Class IE requirements and conform to the guidelines of NUREG 0737 (Reference 7.3.6) and Reg. Guide 1.97 (Reference 7.3.5) as stated in WB-DC-30-7 (Reference 7.2.6). The Incore Flux Mapping Subsystem thimble guide tubes and ~~thimbles up to the~~ mechanical seals at the seal table shall be designed to the requirements for TVA Class A. The non-pressure retaining portions of the Incore Flux Mapping Subsystem perform a secondary safety function.

2.2.1 Seismic Requirements

The portions of the Incore Thermocouple Subsystem which perform a (primary) safety function shall be designed to Seismic Category I requirements in accordance with WB-DC-40-31.2 (Reference 7.2.11)

The portion of both the Incore Thermocouple Subsystem and the Incore Flux Mapping Subsystem that perform a quality-related function shall be designed to Seismic Category I(L) requirements in accordance with WB-DC-40-31.13 (Reference 7.2.13).

The portion of the Incore Flux Mapping Subsystem which performs a primary safety function shall be designed to Seismic Category I requirements in accordance with the following criteria, as applicable.

1) WB-DC-40-31.7 (Reference 7.2.14)

2) WB-DC-40-31.9 (Reference 7.2.15)

3) WB-DC-40-31.12 (Reference 7.2.12)

4) WB-DC-40-31.2 (Reference 7.2.11)

2.2.2 Natural Phenomena Protection

The Incore Instrumentation System shall be located in Seismic Category I structures which provide protection from the effects of tornadoes, tornado missiles, and external floods.

2.2.3 Pipe Rupture and Internally Generated Missile Protection Requirements

The Incore Instrumentation System shall be evaluated for the effects of high/moderate energy line breaks in accordance with WB-DC-40-31.50 (Reference 7.2.16).

The Incore Instrumentation System shall be evaluated for the effects of internally generated missiles in accordance with WB-DC-40-65 (Reference 7.2.22).

2.2.4 Single Failure Requirements

The portion of the Incore Thermocouple Subsystem which performs a safety function shall be designed to meet single failure requirements as defined in WB-DC-40-64 (Reference 7.2.21).

2.2.5 Environmental Qualifications

The Incore Instrumentation System shall be designed to withstand the environmental effects associated with normal operations, maintenance and testing as defined in WB-DC-40-42, (Reference 7.2.18). The portions of the Incore Thermocouple Subsystem and Incore Flux Mapping Subsystem which perform a safety related function shall be designed to meet environmental qualification requirements as defined in WB-DC-40-54 (Reference 7.2.19).

2.2.6 Separation, Fire Protection, and Intrazonal Protection Requirements

The safety-related portion of the Incore Thermocouple Subsystem (see Section 2.1.1) shall be designed using two independent electrical channels and maintain separation in accordance with WB-DC-30-4 (Reference 7.2.5).

The Incore Instrumentation System does not require a separation evaluation from the effects of a plant fire as defined in 10CFR50 Appendix R.

2.2.7 Electrical Power Requirements

Electrical power supplied to the IIS shall be in accordance with WB-DC-30-27 (Reference 7.2.9) and WB-DC-30-28 (Reference 7.2.10).

A. Incore Thermocouple Temperature Recorders

The recorders shall be supplied 120 V AC, 60 Hz, from the Vital Instrument Supply Power.

B. Incore Flux Mapping - ~~Drive Unit Motors~~ WINCISE/PDMS computer cabinet

~~Each drive motor shall be supplied 3 Phase, 460 V, 60 Hz power.~~
The cabinet shall be supplied with 120 V AC, 60 Hz power supply

C. Incore Flux Mapping - ~~Control Cabinets~~ Signal Processing System (SPS) Cabinets
The SPS ~~The control~~ cabinets shall be supplied with 120 V AC, 60 Hz power supply from a 1E Board. These ~~cabinets supply control power to external equipment such as rotary transfer drive motors. See reference 7.1.2 for Incore Flux Mapping Subsystem schematics.~~

2.2.8 Instrumentation and Control Requirements

Control panels shall be designed in accordance with WB-DC-30-20 (Reference 7.2.7). Controls and instrumentation shall be designed to human factor principles specified in WB-DC-30-23 (Reference 7.2.8).

A. Incore Thermocouple Subsystem

1. Sixty-five (65) thermocouples [Chromel/Alumel] shall be located within the reactor core to monitor fuel assembly coolant temperature. The minimum range of the thermocouples shall be 100°F to 2300°F (Reference 7.1.3)

2. Three RTDs [platinum] per each train shall provide reference junction temperature. The minimum range shall be 50°F to 450°F (Reference 7.1.3).

EDCR 52321-A
page 125

2.2.8 Instrumentation and Control Requirements (continued)

3. Two 3-pen strip chart recorder (1 train A, 1 train B) shall record each of the following parameters; 1) High Quadrant Average Temperature, 2) Hottest Thermocouple, and 3) Selectable (Thermocouple Temperature, Saturation Margin, RVLIS, or Hot Leg Temperature).

~~B. Incore Flux Mapping Subsystem~~

1. Functional Control Requirements

   a. Interlocks shall be provided to prevent the simultaneous insertion of two detectors into the same path during automatic (multiple Drive unit) operation.

   b. Interlocks shall be provided to prevent operation of the rotary transfer devices unless the associated detector is in the withdrawn position.

   c. Interlocks shall be provided to stop automatic withdrawal prior to the detector reaching the drive wheel.

   d. Manual position switches shall be furnished to provide a stop signal to the Drive Unit at a preset distance from the top of the core and from the bottom of the core for each selected path.

   e. A pressure switch shall be provided to monitor the 10-path rotary transfer drainage header and initiate automatic drainage.

2. Main Control Room Controls

   The following controls shall be provided for each of the six Drive Units:

   - Six-position selector switch with status lights to control the 5-path rotary transfer device. The five modes of operation shall include OFF, NORMAL, CALIBRATE, EMERGENCY, COMMON GROUP, and STORAGE.

   - Ten-position selector switch with status lights to control the 10-path rotary transfer device. Each switch positions corresponds to each one of the ten paths.

   - Two sets of ten patchboard-type matrix selector switches to provide a preset "top of core" and "bottom of core" stop signals during NORMAL operational mode.

   - Four sets of thumbwheel switches shall be supplied to provide stop signals from the following operational modes: COMMON GROUP, EMERGENCY, STORAGE, and CALIBRATE.

   - Rotary knob shall be supplied to provide continuous adjustment of the detector voltage.

   The following controls shall be provided for the Drive units. These controls are common to all Drive Units.

2.2.8 Instrumentation and Control Requirements (continued)

- Two position selector switch to provide either "Automatic" or "Manual" control.
- Seven position selector switch with status lights to allow individual operation of each of the six Drive units or a switch position for operation of all Drive units.
- Three position selector switch to control Drive motor direction. The three positions shall be "Insert", "Withdraw", and "Off".
- Two position selector switch to provide Drive motor speed signal. The two positions shall be "Low" and "High".
- Pushbutton switches to control the selected Drive motor for each of the following five functions: "Stop", "Insert", "Scan", "Record", and "Withdraw".
- Pushbutton switch to allow reset of the drain header "drainage" actuation signal.

C. Main Control Room Meters, Indicators, and Recorders

The following components shall be provided for each of the six Drive units.

- 5-digit, numeric display to indicate flux detector position.
- Status light to indicate "Inserted" detector cable position and status light to indicate "withdrawn" detector cable position.
- Meter to indicate detector current value.
- Meter to indicate adjustable detector (supply) voltage. Range shall be 0-300 V.
- Three 2-pen strip chart recorders to record detector current values. Each recorder shall start upon actuation of the "Scan" or "Record" switches.

The following components shall be provided common to all Drive units.

- Path Display Panel shall indicate that the detector has reached the selected path. Status lights (58) shall be used and positioned to represent the location of the thimbles in the core matrix.
- Meter to indicate low current level measurements when used with the special 90 V battery. Range shall be 0-50 microamperes.
- Meter to indicate voltage of the special 90 V battery. Range shall be 0-100 V.

EDCR 52321-A
p 127

2.2.8 Instrumentation and Control Requirements (continued)

~~Picoammeter to indicate low current level measurements. Range shall be 0-5 µA.~~

~~D. Local Mounted Controls~~

~~A portable control unit shall be supplied to allow local-manual operation of the Drive units. This control unit provides "Low" and "High" Drive speed signals and "Insert/Withdraw" direction signals.~~

2.2.9 Interface Requirements

The Incore Instrumentation System shall interface with the following plant systems.

A. Reactor Coolant System

~~The Incore Thermocouples are installed into guide tubes which penetrate the reactor pressure vessel head.~~

The ~~detector~~ BMI guide tubing connects to the reactor pressure vessel ~~flux thimbles located on~~ at the bottom of the vessel. The ITAs which house core exit thermocouples (CETs) and Vanadium Self Powered Detectors (SPD) are installed within the fuel assemblies using these BMI guide tubes

The Incore Thermocouples provide an input signal to the Inadequate Core Cooling Monitor (ICCM). The Incore Thermocouple temperature recorders receive input signals from the ICCM.

The Westinghouse Plasma Display in the MCR provides the means to monitor the output of each of the sixty-five Incore Thermocouples in order to analyze the reactor core performance and help determine hot channel factors backed by Plant Computer printout.

B. Electric Power Systems

Electric power shall be supplied to the following equipment:

- ~~Drive Unit Motors~~ WINCISE/PDMS Computer Cabinet
- ~~Incore Flux Mapping Subsystem Cabinets~~ WINCISE SPS Cabinets
- Incore Thermocouple Temperature Recorders

C. Plant Computer Systems

The Plant Computer ~~monitor~~ monitors and provides plant data to the Incore Instrumentation System ~~process signals.~~

EDCR 52321-A
p128

2.2.10 Quality Assurance Requirements

The Incore Instrumentation System shall comply with the quality assurance specified in TVA Nuclear Quality Assurance Plan (NQAP) (Reference 7.2.1). Portions of the IIS which perform a (primary) safety function (see Section 2.1.1) shall meet the quality assurance requirements specified in TVA Nuclear Power Standard, STD-3.1 (Reference 7.2.2). Additionally, reactor coolant pressure boundary retaining components shall meet the requirements specified in TVA ASME III Quality Assurance Manual (ASME III QAM) (Reference 7.2.4). The remaining portions of the IIS perform a quality related function (seismic category I(L)) and shall conform to the augmented quality assurance requirements specified in TVA Nuclear Power Standard, STD-3.2 (Reference 7.2.3).

2.2.11 Process and Operational Requirements

A. Operational Requirements

~~1. The drive cable should be capable of operating at a low speed of 12 feet per minute and at a high speed of 72 feet per minute. (Reference 7.1.1)~~

~~2. The 10-path rotary transfer should be capable of the transfer of a selected path from any other path position within 15 seconds. (Reference 7.1.1)~~

ADD change #4

3. The accuracy of the Incore Thermocouples and Integral Reference Junction RTD's and response times are based on ICCM operational requirements. (References 7.1.3, 7.1.4 and 7.2.23)

B. Process Requirements

The ~~detector thimble~~ ITA and BMI guide tubing shall meet reactor coolant process conditions. The design conditions are 650°F and 2485 psig. The guide tubing are an extension of the reactor pressure vessel. This tubing is designated as Class I components designed to meet the requirements of Section III of the ASME Boiler and Pressure Vessel Code. (References 7.1.5 and 7.2.17).

2.2.12 Codes, Standards, and Regulatory Requirements

The referenced standards shall be applicable to the Incore Instrumentation System (IIS). In addition, the portions of the IIS that are used to mitigate Design Basis Events (DBEs) shall be designed in accordance with the design classification as defined in WB-DC-40-64 (Reference 7.2.21)

A. NRC Regulatory Guides

1. Reg. Guide 1.97 Rev. 2 (Reference 7.3.5)

2. NUREG 0737, Item II.F.2 (Reference 7.3.6)

B. Code of Federal Regulations

1. 10 CFR 50 Appendix A (Reference 7.3.3)

2. 10 CFR 50 Appendix B (Reference 7.3.7)

4)

4. WINCISE Requirements [Ref. 7.1.11]

    1. The WINCISE System shall not require input from more than 75% of the instrumented locations, with at least five operable SPD associated with the top half of the active core and at least five operable SPD associated with the bottom half of the active core per core quadrant, for the initial WINCISE core power distribution measurement in each operating cycle.

    2. The WINCISE System shall not require input from more than 50% of the instrumented locations, with at least five operable SPD associated with the top half of the active core and at least five operable SPD associated with the bottom half of the active core per core quadrant, at all points in core life after the initial WINCISE power distribution measurement in each operating cycle.

    3. The WINCISE System will be capable of performing its required core monitoring functions at or above 20% RTP.

    4. The hardware used by the WINCISE System to support the PDMS plant inputs and calculation software platform will be configured such that a failure of any one component of the hardware will not automatically cause the PDMS to become inoperable.

    5. WINCISE shall support two divisions of IITAs with a minimum of three IITA located in each core quadrant. The radial location of each IITA in each division will be configured to allow each division to monitor approximately equivalent radial Fuel Assembly power distributions.

    6. The radial distribution of IITA provided with the WINCISE System shall support two divisions of CET with a minimum of three thermocouples provided in each core quadrant for each division. The radial location of each CET in each division will be configured to allow each division of PAMS to monitor approximately equivalent radial core exit temperature distributions.

5. IITA Requirements [Ref. 7.1.11]
    1. The IITA electrical connector shall satisfy the post-accident qualification requirements associated with the use of the Type-K CET by the PAMS for at least twenty years of IITA operating lifetime

6. SPD Requirements [Ref. 7.1.11]
    1. The SPDs must be operable at reactor temperatures corresponding to the maximum credible operating power under normal operating conditions in the reactor.
    2. The SPDs shall not require periodic recalibrations against alternate measurements of neutron flux at the SPD location which are not integral to the IITA.
    3. The thermal neutron sensitivity of a fresh primarily neutron sensitive SPD shall be greater than 1.5×10^{-20} Amperes/neutron/cm^2/second/m

7. CET Requirements [Ref. 7.1.11]
    1. The CET must be operable before, during, and after a design basis accident without loss of safety function, and for the time required to perform the safety function.

8. SPS cabinet Requirements [Ref. 7.1.11]
    1. The signals determined from each SPD in every IITA shall be input to a system capable of converting the signals from the SPDs to digitized currents and transferring the digitized

currents to a multiplexing system for transmission to the device(s) that prepares the requisite input to the BEACON-TSM System.

2. At nominal temperature conditions, 77°F or 25°C, the overall uncertainty in the generated digitized currents must not exceed ± 0.00125 microamperes
3. The SPS System shall be configured such that the failure of any single SPS component does not cause more than a 50% reduction in the maximum possible number of operable SPDs
4. The SPS will perform validation of the currents relative to high and low limit values. The high and low current limits are 4.75 microamperes and -0.01 microamperes, respectively
5. The SPS will assign a data quality value which notifies the power distribution calculation software to disregard data from the affected SPD(s). The data quality flag will automatically reset when the signal(s) are within established limits
6. The SPS will evaluate the SPD signals relative to a maximum rate of change criteria between any two consecutive points. The rate of change criteria will be a user-adjustable input value.
7. The internal ambient air temperature of the SPS equipment cabinets must be maintained between 68 °F to 95 °F (20 °C to 35°C) during normal operation. Analytic temperature drift correction may be used to correct the SPD current drift caused by temperatures outside of the nominal range. If analytic correction of the indication changes caused by the temperature drift is not feasible, then temperature control shall be maintained by means of a cooling system when necessary. The maximum change in SPD signal indication due to temperature changes inside the SPS enclosure(s) that can occur before corrective measures are taken is ± 0.0025 microamperes.
8. Upon reaching an internal temperature of 130°F ±10°F (54°C ±6°C), the SPS cabinet internal equipment shall shut down to prevent equipment damage.
9. The maximum allowable relative humidity range inside the SPS equipment cabinets shall be 10% to 95% relative humidity, non-condensing.
10. The SPS equipment enclosures shall maintain their function in a location where the maximum integrated dose is less than 1000 Rads per twenty year span
11. The SPS cabinet external and internal power supplies shall be configured to prevent a single over-voltage or surge event from causing loss of more than 50% of the CET used by the PAMS, and shall comply with the requirements contained in IEEE 384-1981

9. WINCISE Cable Requirements
    1. The CET cable system shall be classified as a safety related Class 1E system and must support the environmental conditions that would exist before, during, and following a design basis accident without loss of safety function, for the time required to perform the safety function.
10. PDMS Requirements
    1. The software used with the Core Power Distribution Monitoring System shall be a version of BEACON-TSM licensed for use with Vanadium SPD and configured to process signals from the OPARSSEL IITA design.

3. 10 CFR 20 (Reference 7.3.2)

4. 10 CFR 100 (Reference 7.3.4)

C. Industry Codes

1. ASME Section III Boiler and Pressure Vessel Code (Reference 7.3.1)

2. IEEE 323-1974 (Reference 7.3.8)

3. IEEE 384-1981 (Reference 7.3.9)

2.2.13 Other Requirements

A. Cable Routing ~~to Reactor Head~~ from SEAL Table

~~The Incore Thermocouple Subsystem extension cables from the thermocouple leads to the junction boxes located in the Incore Instrument Room shall be designed to allow for the reactor head removal process.~~ The MI cables shall be routed to allow for IITA retraction during refueling outages.

B. Thimble Design Requirements for the Incore Flux Mapping Subsystem

The thimbles shall be distributed nearly uniformly over the core with approximately the same number of thimbles in each quadrant. The number and location of these thimbles shall be chosen to permit measurement of local to average peaking factors ~~to an accuracy of ±5% (95% confidence). Measured nuclear peaking factors will be increased by 5% to allow for this accuracy~~. If measured power peaking is larger than acceptable, reduced power capability will be indicated.

~~The movable detector thimbles shall be closed at the leading (reactor) ends, and thus normally dry inside.~~ The ~~thimbles~~ IITAs shall serve as the pressure barrier between the reactor water pressure and the atmosphere. Mechanical seals between the ~~retractable thimbles~~ IITA and the thimble guide tubes shall be provided at the seal table. The thimble guide tubes are essentially extensions of the reactor vessel~~, with the thimbles~~ allowing the insertion of the ~~incore instrumentation movable miniature detectors~~. IITAs.

During normal operation, the ~~retractable thimbles~~ IITAs shall be stationary and shall only be retracted under depressurized conditions during refueling or for maintenance to avoid interference within the core. ~~A manually operated isolation valve shall be provided on each thimble on the outboard side of the mechanical seal. This valve shall be designed to isolate the thimble if thimble leakage is detected. The valve need not be designed to isolate a thimble while the detector/drive cable is inserted in the thimble.~~

C. Storage Requirements

Upon use, the IFMS ~~neutron detectors and portions of the detector device cables which are driven into the reactor vessel~~ IITAs will become irradiated. Provisions shall be made to provide adequate ~~storage facilities for the irradiated neutron detectors and portions of the detector drive cables when they are not in use.~~ supports for extraction of IITAs during refueling outages.

3.0 DESIGN DESCRIPTION - FOR INFORMATION ONLY

The following describes engineering bases for functional requirements of the Incore Instrumentation System.

EDCR 52321-A
page 132

3.1 System Description and Performance Characteristics

3.1.1 Incore Thermocouple Subsystem

The 65 Chromel-Alumel thermocouples are threaded into guide tubes that penetrate the reactor vessel head through seal assemblies, and terminate at the exit flow end of the fuel assemblies. The thermocouples are provided with two primary seals, a Core Exit Thermocouple Nozzle Assembly (CETNA), see Reference 7.1.8, and swage type seal from conduit to head. The thermocouples are supported in guide tubes in the upper core support assembly.

Thermocouple extension wires (Chromel/Alumel) are terminated at the integral reference junctions contained on each of ten (10) containment cable assemblies, five (5) per train, and located in junction boxes in the Incore Instrument Room. Each integral reference junction provides a platinum resistance temperature detector (RTD). Only three (3) RTDs per train are connected; the other two (2) are installed spares. These detectors, along with their associated incore thermocouple signals are input to the Inadequate Core Cooling Monitor (ICCM) system. A microprocessor in the ICCM cabinet processes the input information and provides for a Plasma Display incore thermocouple temperature readout at the MCR. Information is available on the multipage screen of the Plasma Display using key switches. Thermocouple readings are also monitored by two (2) 3-pen recorders (one for each train) and backed by plant computer printout, input for which is provided from the ICCM system.

3.1.2 Incore Flux Mapping Subsystem

~~The control and readout system provides means for inserting the miniature neutron detectors into the reactor core and withdrawing the detectors while plotting neutron flux versus detector position. The thimbles are distributed nearly uniformly over the core with about the same number of thimbles in each quadrant. The control system consists of two sections, one physically mounted with the drive units, and the other contained in the control room. Limit switches in each transfer device provide feedback of path selection operation. Each gear box drives an encoder for position feedback. One 5-path operation selector is provided for each drive unit to insert the detector in one of five functional modes of operation. A 10-path rotary transfer assembly is a transfer device that is used to route a detector into any one of up to ten selectable paths. A common path is provided to permit cross calibration of the detectors.~~

~~The control room contains the necessary equipment for control, position indication, and flux recording for each detector. Additional panels are provided for such features as drive motor controls, core path selector switches, plotting, and gain controls.~~

~~A "flux-mapping" consists, briefly, of selecting (by panel switches) flux thimbles in given fuel assemblies at various core quadrant locations. The detectors are driven to the top of the core and stopped automatically. An x-y plot (position versus flux level) is initiated with the slow withdrawal of the detectors through the core from top to a point below the bottom. In a similar manner other core locations are selected and plotted. Each detector provides axial flux distribution data along the center of a fuel assembly.~~

Replace with change #5

3.1.2 Incore Flux Mapping Subsystem (continued)

see change #5

The detectors are designated A, B, C, D, E, and F. Each detector will normally be used to measure the flux in thimbles connected to the correspondingly lettered 10 path rotary transfer device (normal mode). However, by means of the operation selector controls, each detector can also be routed through several other paths (see Figure 8.4 for diagram of detector paths). Each detector can thus be sent into each path of the next sequentially lettered 10-path transfer device (emergency mode) to serve as an operational spare detector for that device. For calibration purposes, each detector can be routed separately into a common calibration path (calibrate mode), thus providing correlation of the six detectors. Each detector can also be sent into any path of the 10-path transfer (common group mode) or to a shielded area for storage (storage mode). Various radial positions of detectors are then compared to obtain a flux map for a region of the core.

The thimbles are inserted into the reactor through thimble guide tubes extending from the bottom of the reactor vessel through the concrete shield area and then up to a thimble seal table. Because the movable detector thimbles are closed at the leading (reactor ends, they will normally be dry inside. They will thus serve as the pressure barrier between the reactor water pressure (2485 lb/in^{2}g design) and the atmosphere. High pressure mechanical seals between the retractable thimbles and the thimble guide tubes are provided at the seal table.

The thimbles are distributed nearly uniformly over the core with approximately the same number of thimbles in each quadrant. The number and location of these thimbles have been chosen to permit measurement of local to average peaking factors to an accuracy of ±5% (95% confidence). Measured nuclear peaking factors will be increased by 5% to allow for this accuracy. If the measured power peaking is larger than acceptable, reduced power capability will be indicated.

Operating plant experience has demonstrated the adequacy of the Incore Instrumentation System in meeting the design bases stated.

3.2 Equipment Description

3.2.1 Incore Thermocouple Subsystem

A. Incore Thermocouples

Sixty-five chromel-alumel Incore Thermocouples are provided. Each thermocouple is 1/8" (nominal) diameter, stainless steel sheathed, aluminum oxide insulated, with the trailing end terminated in a male thermocouple connector. The thermoelectric characteristics conform to the K calibration curve.

Each thermocouple is supplied to the specific length required for its assigned location. They are located at the core exit for each quadrant and provide indication of radial distribution of the coolant enthalpy rise across representative sections of the core.

5) Incore Flux Mapping Subsystem [Ref. 7.1.11]

The WINCISE System uses OPARSSEL™ Incore Instrument Thimble Assemblies (IITA), containing five Vanadium self-powered neutron detectors (SPD), to continuously measure the three-dimensional (3-D) core power distribution. The SPDs are distributed both axially and radially within the reactor core to provide continuous measurements of signals directly proportional to the neutron flux present around each SPD element. The measured SPD signals are processed to be suitable for use by the BEACON-TSM™ Power Distribution Monitoring System (PDMS) to generate continuous 3-D measurements of the reactor core power distribution.

Each OPARSSEL IITA also houses a Core Exit Thermocouple (CET). The CET contained in each IITA is positioned to provide a measurement of the reactor coolant temperature at the top of the active fuel of the host fuel assembly thus providing a component measure of the core exit temperature. The CET measurements are for use by the Post Accident Monitoring System (PAMS), and are not used by the WINCISE System to measure the core power distribution.

The SPD and CET signal wires from each IITA are terminated in an electrical connector located at the end of the IITA outside of the Reactor Coolant System (RCS) pressure boundary. The SPD signals are routed from the electrical connectors to the Signal Processing System (SPS) cabinets for analog-to digital conversion. The digitized SPD signals are then routed through fiber optic cables to the BEACON-TSM PDMS calculation software. The CET signals are routed directly through containment penetrations for input to the PAMS.

The neutron flux data provided by each SPD is processed by the PDMS. The PDMS software resides on a computational workstation and uses the SPD signals in conjunction with analytically-derived constants and other plant sensor signals to continuously generate full 3-D indications of nuclear power distribution in the reactor core. The PDMS allows the SPD signals to be used, in conjunction with other reactor condition data, to determine if the reactor power distribution is currently within the operating limits defined in the Technical Specifications (TS) when the reactor is operating above 20% of Rated Thermal Power (RTP). Additionally, the 3-D core power distribution determined by PMDS is used to develop the core power distribution information required for calibrating the excore Nuclear Instrumentation (NI) input to the Over-Temperature Delta-T (OTΔT) Reactor Trip Setpoint, monitoring the Quadrant Power Tilt Ratio, or verifying position of a rod with inoperable position indicators.

When the reactor is operating above 20% RTP, the PDMS is capable of calculating actual core peaking factors within an operationally defined uncertainty. Margin to these limits is available for display on a continuous basis to permit reactor operators to assess actual core conditions and alert operators of low margin and operating limit violations. The PDMS also provides predictive capabilities which allow operators to evaluate, in advance, consequences of power changes, coastdown operations and load follow maneuvers, permitting examination of alternatives and affording increased operator understanding of the expected core response.

3.2.1 Incore Thermocouple Subsystem (continued)

B. Integral Reference Junction RTDs

There are five (5) Integral Reference Junction RTDs per train, ten (10) total, and each utilizes an integral reference junction platinum RTD. The reference RTDs are provided to permit transition from chromel-alumel thermocouple extension wiring to copper field wiring. Six (6), three (3) per channel, of the RTDs are connected directly to Inadequate Core Cooling Monitoring (ICCM) cabinets for cold reference junction temperature compensation. The remaining four (4) RTDs, two (2) per channel, are not connected but are retained as spares for connection should one of the connected RTDs fail.

Means are provided by cross checking between channels to verify the operational availability of each of the RTD monitoring channels during reactor operation.

C. Incore Thermocouple Recorders

Two 3-pen strip chart recorders are supplied to record Incore Thermocouple temperature data. The ICCM supplies each recorder with an input signal for each of the following parameters: 1) High Quadrant Average Temperature, 2) Hottest Thermocouple Temperature, and 3) Selectable (Thermocouple Temperature, Saturation Margin, RVLIS, or Hot Leg Temperature).

The recorders are designated as PAM 1 and PAM 2 and are located on MCR Boards M-4 and M-6, respectively.

D. Incore Thermocouple (ICTC) Plasma Display

The ICTC temperature indication is provided through a Plasma Display screen (one for each train) at the MCR. Input for the Display unit is provided from a microprocessor in the ICCM cabinet (one for each train). The Plasma Display consists of graphic and alphanumeric display on a screen in various pages accessible to the operator through four pushbuttons located on a keyboard near the screen. Under normal plant condition information on reactor vessel level, incore thermocouples and subcool parameters and pump status are displayed on the screen termed the first page. In the event that conditions deviate from normal, the operator can use the four pushbuttons to bring up data on sensor status, trending or individual sensor readouts on reactor vessel level, incore thermocouples and subcooling margin. Pushing the relevant pushbutton for incore thermocouples displays the following pages of information:

1. The first page on the screen will display a spatially oriented core map giving temperature values at each thermocouple coordinate.

2. The second page on the screen will display maximum, average, and minimum temperature for each quadrant of the core, the high auctioneered average temperature appearing toward the center in that quadrant.

3. Page three on the screen will display tabulated values of thermocouples temperature by quadrants.

4. Thermocouple average and auctioneered high temperature trend over a 30 minute range will be displayed on pages 4 and 5 respectively.

EDCR 52321-A
page 136

3.2.1 Incore Thermocouple Subsystem (continued)

The above Plasma Display information is backed by readout from two (2) 3-pen recorders (one for each train) at MCR and also by computer printout from Plant Computer System. ICTC temperature high alarm is also annunciated at MCR. The range of the display will be 200°F to 2300°F. This ICTC Display will constitute compliance to TVA's NUREG 0737, Item II.F.2 commitment.

Refer to N3-68-4001 (Reference 7.2.23) for detailed description of the Plasma Display.

3.2.2 Incore Flux Mapping Subsystem

Replace with change #6 through #9

A. Movable Miniature Neutron Flux Detector

Six fission chamber detectors (employing U_3O_8 enriched to more than 90% in U-235) are provided to be remotely positioned in the retractable guide thimbles. Approximate chamber dimensions are 0.188" in diameter and 2.1" in length. The stainless steel detector shell is welded to the leading end of the 0.188" diameter, helical wrap drive cable and to the stainless steel or Inconel-sheathed coaxial cable. Each detector is designed to have a minimum thermal neutron sensitivity of 1.0×10^{-17} amp/nv and a maximum gamma sensitivity of 3×10^{-14} amp/R/hr. (Reference 7.1.1)

B. Drive Unit Assemblies

The six drive units are mounted permanently on a platform approximately 11' from the seal table. The drive units will push hollow helical-wrap drive cables into the core with the miniature detectors attached to the leading ends of the cables with small-diameter sheathed coaxial cables threaded through the hollow centers back to the trailing ends of the drive cables.

Six drive unit assemblies are supplied as described in the following subsections. (see Reference 7.1.1) Refer to Figure 8.4 for the diagrammatic representation of the Drive System.

1. Gearmotor and Slip Clutch

One 2-speed, 2-winding, reversible, constant torque drive motor (Reuland model A103-F-3) is provided. The drive motor is 3 ph, 460 V, 60 Hz, 3600/600 r/min, with a 60:1 gear reducer. It incorporates an adjustable type magnetic brake. Two lever arms at the top of the motor housing permit manual release of the motor brake. This motor provides sufficient power to push a drive cable and detector through any path. Low speed for the drive cable is 12 ft/min and the high speed is 72 ft/min. The slip clutch is the ball detent type with a maximum torque rating of 17.6 ft-lb.

NOTE: Once the slip clutch setting has been exceeded during operation and the clutch has slipped, it is necessary to slightly withdraw the cable to reset the clutch. Insertion may then be attempted.

2. Drive Box

EDCR 52321-A
page 137

3.2.2 Incore Flux Mapping Subsystem (continued)

The drive box is of the straight-through type, designed to operate with helical-wrap drive cable. The hobbed drive-wheel is approximately 5" in diameter and is driven by the gearmotor through the slip clutch. The backup pulley wheel assembly can be removed for insertion of the drive cable.

3. Storage Reel

The storage equipment consists of a spring-loaded takeup reel with integral locking device. The reel has sufficient takeup torque to prevent the drive unit from overrunning the reel at maximum speed during a change from low to high speed, or during braking. The 24" diameter storage reel accommodates drive cable 175' in length. Slip-ring assemblies permit readout of electrical signals while the reel is rotating. Spring loading is preset during installation of a detector at which time the trailing end of the detector coaxial cable is fastened to the outer face of the storage reel flange. Electrical connection to the slip-ring assembly is via the Subminax connector (Airflyte Electronic model CAY-348).

4. Position Transmitter

A position encoder provides readout in the MCR of the detector position. The encoder is driven at a speed proportional to the drive cable speed by means of a gear train from the drive wheel shaft.

Signals from the Airflyte encoder are in an absolute, parallel, nonambiguous 8-4-2-1 binary-coded-decimal (BCD) form for position readout and control through the control console. The output logic level for a binary'1' is +3.5-V dc minimum and +0.5-V dc maximum for a binary'0'. A +5-V dc power supply, PS2, (Power Tech model 2C5-6) is located within the control console to provide power to the position encoder.

5. Dehumidifier

One dehumidifier unit is located within each drive unit enclosure. It is recommended that the dehumidifiers be continuously energized to minimize corrosion of the drive cables. The dehumidifiers are on a separate electrical circuit; thus they may be left energized when the system is not in use.

6. Drive Motor Disconnect Switch

A manual motor control (Westinghouse model A100XOC) is provided for each drive unit. These units are separately mounted near the drive unit assemblies and provide a means to locally disconnect the supply power to any Drive unit without affecting the other Drives.

C. Transfer Device Assemblies

Six 5-path rotary transfer devices (one per drive unit) and limit switch assemblies will be permanently mounted between the drive units and the seal table. The remaining components are mounted above the seal table on a movable frame assembly which can be moved aside at times of refueling (Reference 7.1.1).

EDCR 52321-A
page 138

3.2.2 Incore Flux Mapping Subsystem (continued)

1. 5-Path Rotary Transfer Devices and Withdraw Limit Switches

   One 5-path rotary transfer device is provided with each drive unit for routing the detector into the "NORMAL", "CALIBRATE", "EMERGENCY", "COMMON GROUP" or "STORAGE" paths. The 5-path transfer consists of an S-shaped tube mounted in a rotating assembly. This assembly is bearing-mounted at each end and can be positioned at any one of the five outlets. A motor-driven index mechanism provides accurate positioning. When an electrical signal is applied to change position, the motor starts and drives the position and locking cam through a slip coupling. The cam activates the plate by contacting the cam follower, indexing the plate to the next position, then locking the mechanism. When the selected path is reached, the motor deenergizes. The index plate is held in a positive fixed position by the locking portion of the cam.

2. Wye Units

   Wye unit assemblies are mounted as required in the interconnecting tubing between the 5-path transfers and the seal table. Each wye unit has two inlets and one outlet and is used to converge two paths into a single path.

3. 10-Path Rotary Transfer Devices

   One 10-path rotary transfer device is provided with each drive unit. The 10-path rotary transfer devices are mounted on the movable frame assembly.

   Each transfer device can be motor-driven at such speed that the time to switch from any one path to any other path does not exceed 15 seconds. A series of cam-actuated microswitches sends signals to the control console for position feedback of path selection.

   Detector-actuated path indicator switches near the outlets send contact-closure signals to the path display panel in the control console. Design and operation of the 10-path rotary transfer is similar to that of the 5-path rotary transfer described in subSection 3.2.2C.1 except that 10 output paths are available. Unused outlets are plugged.

4. Isolation Valve Assemblies

   Fifty-eight manually operated stainless-steel isolation valves are provided for closing the thimble runs after removal of the detector and drive cable. When closed, the valves prevent steam leakage from the core if a thimble ruptures. The incore thimble could be capped, in lieu of closing the manual isolation valve, to prevent steam leakage from the core if a thimble ruptures.

EDCR 52321-A
page 139

3.2.2 Incore Flux Mapping Subsystem (continued)

5. Limit Switch Assemblies

A withdraw limit switch, actuated by the detector, is provided near the inlet of each 5-path transfer. This switch prevents operation of the rotary transfer device unless the detector is in the withdrawn position. The switch also stops automatic withdrawal when the detector reaches the withdrawn position. A safety limit switch, actuated by the detector, is provided near the outlet of each drive unit. This switch prevents any attempts to withdraw the detector back over the drive wheel.

A calibrate path limit switch, actuated by the detector, is provided in the calibration path between the 5-path transfers and the seal table. This switch actuates the proper light on the path display panel when any detector is inserted into the calibrate path.

D. Thimble and Thimble Guide Tubing

The thimble and thimble guide tubing consists of 58 assemblies used to interface with the reactor pressure vessel (RPV) and allow the detectors to be inserted into the reactor core. The thimble guide tubing consists of individual heavy-walled tubes that extends from the seal table to the socket weld connectors at the RPV bottom head penetrations. Each tube is comprised of a series of three shorter sections joined with socket weld couplings at two places. The thimble is inserted within the thimble guide tubing and is used to isolate the reactor coolant pressure from the detectors. The reactor coolant pressure boundary between the inner tubing (thimble) and outer tubing thimble guide tubing) is maintained at the seal table by a high pressure compression-type fitting (e.g., Swagelok). (Reference 7.1.6)

The thimble guide tubing is designated as ASME Section III Class I. The code of record is 1971 Edition through Summer 1973 Addenda (Unit 1) and 1974 Edition through Summer 1974 Addenda (Unit 2). (Reference 7.1.5)

E. Drive Cable Assemblies

The carbon-steel drive cables are hollow-core helical wrap cables which mesh with the drive wheel. The 0.040"-diameter coaxial cable is threaded back through the 0.065" ID of the drive cable and terminates at the trailing end with several feet of slack and 12" of RG-174/U cable ending in a Subminax plug. The drive cables (when new) are approximately 175' long. This allows at least two subsequent cuts of 12' to 14' each before the cable becomes too short for use. Thus, it may be possible to salvage the drive cable for detector replacement. (References 7.1.1 and 7.1.7)

Should not be removed. Remains valid for unit 2

EDCR 52321-A
page 140

3.2.2 Incore Flux Mapping Subsystem (continued)

F. Instrumentation and Controls

Instrumentation and control equipment is mounted on four rack-frames (i.e., control console) located in the MCR. The Incore Flux Mapping Subsystem which provides indication and control to make flux maps of the reactor core either by semiautomatic control or by manual controls. Equipment used to accomplish these functions includes position decoders, displays, logic circuitry, relays, and selector switches. The control console contains separate controls, digital position display, and power supply for each Drive unit. Common equipment, including one path display panel, one common control panel, special low level readout, and three 2-pen recorders are also included in the console assembly.

The instrumentation and control equipment is provided as described in the following subsections.

1. Path Selection

A 6-position Operation Selector Switch is provided for each detector drive, with an indicator light adjacent to each switch position. The Operation Selector Switch does not disconnect the position indication display. Common or individual control of the detectors during insertion and plotting is possible. The operation circuits are electrically interlocked to prevent attempted simultaneous insertion of two detectors into the same path under automatic-multiple operation. The withdraw limit switch is interlocked with the 5-path and 10-path rotary transfer devices to prevent their operation unless the associated detector is in its withdrawn position. Contact-closure signals from each Operation Selector Switch are supplied to the plant computer.

A 10-position individual Path Selector Switch is provided for each group with an indicator light adjacent to each position. The lights are energized by feedback from switches on the associated 10-path rotary transfer device which close when the device has reached the selected position.

Path selection is always achieved on the Path Selector Switch associated with the 10-path transfer device through which the detector must pass. For example, if the A detector is to be operated in the EMERGENCY mode, path selection is made on the B path selector switch and, if the detector is to be operated in the COMMON GROUP mode, path selection is made on the C path selector switch. In the CALIBRATE mode, path selection is unnecessary since the calibrate path is common to all drives and bypasses the 10-path transfers. Contact-closure signals from the individual path selector switches are supplied to the plant computer.

All of the lights are of the press-to-test type.

Detector-actuated microswitches located at the outlet of each 10-path transfer device energize path-display lights on the Path Display Panel (Section 3.2.2F.11) to indicate that the detector has actually reached the position in the selected path.

The above description is typical of each drive train.

3.2.2 Incore Flux Mapping Subsystem (continued)

2. Position Control

The position readout signals are used in the control system to provide a stop signal at a preset distance from the bottom of the core and at the top of the core for each selected path during insertion. The position control devices also furnish an additional stop signal at the preset distance from the bottom after plotting. A set of 10 patchboard type matrix selector switches (Verselectors) with five "top-of-core" and five "bottom-of-core" pin positions for each path is provided to preset the bottom and top stop signals for normal operation. The positions are selected by means of pins of the correct lengths to make contacts as required. Thumbwheel switches are provided to preset the stop signals for other modes of operation. Position settings for NORMAL operation are set on the patchboards (Verselectors); settings for COMMON GROUP, EMERGENCY, and STORAGE operations are set on the COMMON GROUP/EMERGENCY/STORAGE thumbwheel switches; and settings for the CALIBRATE operation are set on the CALIBRATE thumbwheel switches. Top-of-core and bottom-of-core position settings are always performed on the Position Control Panel of the detector being run.

3. Drive Motor Control

When any Operation Selector Switch is in a position other than OFF and automatic-manual switch A4S10 is in the AUTOMATIC position, pushbuttons A4S2 through A4S5 will control the drive motor(s). Thus, A4S2 is used for INSERT, A4S3 for SCAN, A4S4 for RECORD, and A4S5 for WITHDRAW in automatic operation. (Reference 7.1.1)

The drive selector (single/multiple) switch A4S9, on the common control panel, selects either all drives or any single drive. (Note that, when operating under automatic control in the ALL position of the drive selector switch, a multiple operation shutoff logic circuit prevents simultaneous insertion of two detectors into the same path. This interlock is not active in the other positions of the drive selector switch or during MANUAL operation.)

When AUTO/MAN switch A4S10 is in its MANUAL position, the pushbuttons are disabled, and switches A4S7 (SPEED) and A4S6 (INSERT-WITHDRAW) are engaged in the control circuit for manual operation. The only limitation on detector movement in this mode is the final safety limit signal to prevent withdrawal of the detector backover the drive wheel.

Local control of speed and direction is provided at the drive unit by a portable control unit for local-manual operation of the Drive units.

4. Distribution Panel

This panel contains the main circuit breaker for console power and fuses for individual console loads. Separate circuit breakers are provided on the panel for the drive unit dehumidifiers. Also located on this panel are the leak detection alarm and its associated reset pushbutton.

EDCR 52321-A
page 142

3.2.2 Incore Flux Mapping Subsystem (continued)

5. Detector Position Display

A 5-digit, numeric display is furnished for each Drive unit. The display indicates the position of the associated detector. The digital input signal is supplied from the Position Transmitter (Section 3.2.2B.4).

The detector position reference point (i.e., 0000.0), is set at the withdraw limit switch location. Therefore, the detector positions on the inserted side of the reference point will be displayed as numbers counting upward from 0000.0 while detector positions on the withdrawal side of the reference point will be displayed as numbers counting downward from 9999.9.

6. Detector Power Supplies

One power supply is mounted on each detector readout panel. These supplies are alternating current voltage rectifiers continuously variable to 300 V. Each consists of a voltage adjuster, a shielded step-up transformer, a bridge rectifier, L-C filter, voltmeter and bleeder resistor. The portion beyond the supply transformers is well insulated from ground to provide a "floating" power supply. This is necessary because each miniature detector has only one center conductor which serves as both the power supply lead and the current lead. For the current readout equipment to operate near ground potential, the current return paths to the power supplies are routed through the current readout circuits.

7. Detector Current Meters

A current readout meter having a range of zero to 50 μA is provided in the return circuit to the power supply. A switch is provided to shunt the meter so that full scale can also correspond either to 150 or 500 μA, or to 1.5 or 5 mA.
A 1000-ohm multiturn potentiometer and precision shunts in series with the meter provide outputs to the recorder and plant computer.

These are also shunted by the same range switch to give 50-mV and 1.0-V full-scale signals to the recorder and plant computer, respectively. The full current output can also be supplied temporarily to an external picoammeter for special low current measurements.

The potentiometers permit relative calibrations of the detectors. Even when using new detectors manufactured by the same supplier, there will be considerable difference in sensitivities due to the extreme difficulty of providing uniformity in miniature components. Relative detector life (burnup) may further increase this difference. The potentiometers provide a means for selecting the least sensitive of the detectors, using it as a standard, and then intentionally reducing the output of the other detectors to the same level.

Contact-closure signals from the range switch are supplied to the plant computer.

3.2.2 Incore Flux Mapping Subsystem (continued)

8. Detector Current Recorder

Three 2-pen, strip-chart recorders with full-scale deflection corresponding to 10 mV are provided. The chart speed is synchronized with the low speed of the drive motors so that 1" of chart movement corresponds to 10" movements for the detectors. The first recorder monitors the signals from detectors A and B, the second recorder monitors the signals from detectors C and D, and the third recorder monitors the signal from detectors E and F. Each recorder is started automatically by the associated SCAN or RECORD pushbuttons, or can be started at any other time by using the integral manual start switch.

9. Power Supplies

Three power supplies are mounted in the rear of the common control rack as follows:

Power Supply	Type	Voltage Output
PS1 (Logic)	Dressen-Barnes, 51-5S	+5 V dc
PS2 (Encoder)	Powertec, 2C5-6	+5 V dc
T1 (Lights & Relays)	Thordarson, Transformer	24 V ac

10. Path Display Panel

A common display panel is located in the MCR to indicate detector position. This display consists of 58 status lights arranged in a grid to represent the relative location of each thimble in the reactor core. Status information is provided by energizing the status light(s) to indicate the detector has reached the selected thimble (microswitches are positioned at the outlet of the 10-path rotary devices).

11. Leak Detection System

The leak detection system consists of a drain header connecting the 10-path transfers, a Mercoid model AP-7021-153 pressure switch and drainage solenoid valve installed in the drain header, and an alarm and reset pushbutton mounted on the distribution panel in the control console. Liquid collecting in a 10-path transfer due to a leak will cause the water level to rise in the drain header, thus actuating the pressure switch. A contact from the pressure switch will energize the leak alarm and drainage solenoid, dumping the water to the plant drain. The alarm may be acknowledged by pressing the lighted reset pushbutton which silences the audible alarm and seals in the alarm light. When the water level in the drain header decreases below the pressure switch trip-point the alarm light will go out and the leak detection system will return to its normal condition.

3.3 System Interfaces

The following system interfaces are provided for the Incore Instrumentation System:

6) A. Incore Instrument Thimble Assembly (IITA) [Ref. 7.1.12]

The Incore Instrument Thimble Assembly (IITA) consists of five vanadium emitter detectors and one Type K thermocouple encased by an outer sheath tube. The outer sheath tube protects the detectors and thermocouple from contacting the reactor coolant.

The outer sheath tube is connected to the header/seal plug through an adaptor which provides the sealing surface to the reactor core. The detectors and thermocouple are routed to their respective termination points through the header.

Exiting the seal plug, the thermocouple and detectors are enclosed in a flexible metal hose and are terminated inside the backshell (at the receptacle).

a. Vanadium Self-Powered Neutron Detector (SPND) Assembly

The SPND is a mineral insulated (MI) cable made up of three sections: the signal lead, emitter section, and extension member. The signal lead is an Alloy 600 signal wire insulated by moisture free aluminum oxide (Al2O3) within a stainless steel outer sheath. One end of the signal wire is attached to the emitter. The other end is attached to the receptacle connector. The vanadium emitter has a nominal diameter of 0.039", and is insulated by moisture free Al2O3 within a stainless steel outer sheath. The extension member is a stainless steel wire attached to the end of the MI cable. The extension members are connected to a tail anchor, which aid the installation process and provide a means to locate the thermocouple in proximity to the outer sheath.

b. Thermocouple Assembly

The Type K grounded junction thermocouple used in the assembly is a mineral insulated cable with a 0.062" nominal diameter containing a Chromel and Alumel thermoelements. The cable is insulated with moisture free Al2O3 in an Alloy 600 outer sheath. The lead ends of the cables are sealed with epoxy.

c. **Outer Sheath Tube and Adaptor Assembly**

A 316L stainless steel outer sheath tube is used to protect the detectors and thermocouple from contact with the reactor coolant. It also enables the IITA to withstand the axial forces during incore installation and removal. The outer sheath adaptor transfers the forces between the outer sheath and the header. The adaptor is brazed to the outer sheath at the sub-assembly stage. This joint receives visual and helium leak inspections. During main assembly, the adaptor is welded to the header. This weld receives visual, helium leak, liquid penetrant, and radiographic inspections.

7) B. CET and Neutron Flux Signal Cables

a. 1-to-2 Transition Cable

The 1-to-2 transition cable or "Y" cable allows the separation of the safety-related CET signals and the non-safety related neutron flux signals.

The 1-to-2 transition cable mates with the IITA connector at the seal table. After the two way split, the safety-related CET signals connector mates with the 6-to-1 transition cable and the neutron flux signal connector mates with the SPS Cabinets.

Although the entire 1-to-2 cable is EQ qualified for the harsh environment, only the sections containing CET signals will be considered safety-related class 1E. The section with only neutron flux signals will be considered non safety-related.

b. 6-to-1 Transition Cable

The 6-to-1 transition cable combines six pairs of CET signals in order to minimize the number of penetrations needed. The 6-to-1 transition cables is a safety related EQ cable which connects to the CET Containment Cable Assembly. The CET containment cable assemblies permit the removal of the reference junction boxes inside containment and place them outside containment in the Common Q (PAMS) cabinet.

c. CET Containment Cable Assembly

Each CET containment cable assembly consists of a CET containment cable welded to a feedthrough module. The connector not welded inside connector shall be installed above the containment spray flood level of 717.3 ft. [Ref. 7.2.24 Note 5].

The CET containment cable assembly is a safety related EQ cable

8) C. Signal Processing System (SPS) Cabinets [Ref. 7.1.13]

Each free standing cabinet located in the Instrument or Seal Table Room inside containment receives input signals through bulk head connectors at the top of the cabinet. These field signals terminate on the backplane cards. The analog input currents pass into the amplifier cards through the backplane cards, and the digital output signals pass into the datalink interface cards through the backplane cards as well. The processed data is transmitted outside of the cabinet by fiber optic Ethernet to the application servers

Since the IITAs are grouped into PAM 1 or PAM 2, all neutron flux signals from PAM 1 and PAM 2 IITAs are routed to 2-L-201 and 2-L-202, respectively. Power to 2-L-201 and 2-L-202 shall be isolated from a Train A and Train B 1E source, respectively, to provide a non safety related power feed.

a. Incore Instrumentation System (IIS) Signal Processing Equipment (SPE) Chassis

The primary function of the IIS SPE chassis is to convert SPD input analog currents to digital values and transmit the values via Modbus remote terminal unit (RTU) protocol over Full Duplex RS-422. The secondary function of the IIS SPE chassis is to provide cabinet status information over the same Modbus RTU Full Duplex RS-422. All communication in the WINCISE SPS is full duplex. There are four chassis per WINCISE SPS cabinet. The topmost chassis (IIS01) is the master chassis.

b. IIS SPS Backplane Card

The functions of the IIS backplane card are to provide communication paths between the datalink modules and the amplifier modules, and to provide termination points for cabinet wiring to the IIS SPE chassis. Analog current inputs are inserted through D type coaxial connectors, J1 through J8, and the backplane connects these inputs to the individual amplifier modules. Each coaxial connector carries signals from one IITA. Each D type connector can accept up to eight input pairs and all input signals on a single connector go to the same amplifier module. Redundant 24V power sources can be connected to the backplane through ST2. The two power feeds are connected separately to each amplifier and datalink module connector on the backplane. See Figure 3.2.2.8.b

c. IIS SPS Amplifier Module Assembly

The function of the IIS SPS amplifier module is to amplify and digitize low-level analog currents, and communcate the digital current values via Modbus RTU over RS-422. Each amplifier card receives analog currents from only one IITA. Although the amplifier card has 8 channels, only five channels are used since each IITA only has five SPDs.

During normal operation, the current inputs are converted to voltages through a low-pass, inverting current-to-voltage amplifier circuit. The voltages are input to an analog to digital (A/D) converter, which is regularly polled by a microcontroller on the amplifier module to provide a digital value which is proportional to the input current. Digital isolators are used to transmit serial control and data signals from the A/D converters to the microcontroller. The use of isolation ensures that the inputs are electrically isolated from system ground.

One other mode of operation is available on the amplifier module is the leakage test mode. When the request is initiated via a datapoint in the Integrated Computer System (ICS), a requested by the datalink module over the RS-422 serial link on the backplane card, the amplifier module will enter leakage test mode. In leakage test mode, an additional 1.00 megohm (MΩ) of resistance is added to the current input path. The introduction of this resistance results in a change in the measured current due to the leakage of current in the cabling between the detector and the amplifier module. The change in measured current is used by the application servers to determine the current leakage and adjust the measured current to account for the leakage component.

Each amplifier module can have its calibration verified at the cabinet through known test signals that can be switched in through the front panel. When test signals are switched into the circuit, the detector currents are shunted to ground. A 25 pin connector (TJ-1) located on the front of the amplifier card allows for an external test box to control the switching in of these signals. The test signals are switched in using a set of eight double pole double throw, hermetically sealed relays; one per channel.

d. IIS SPS Datalink Interface Module Assembly

The primary and secondary functions of the datalink interface module are to collect digital data from the amplifier modules as well as cabinet status information and transmit them via Modbus to an external server.

Each SPE Chassis contains two datalink modules with each located on the left and right ends of the chassis. By default, the left topmost datalink is the master datalink that transmits the digitized field inputs and cabinet status information to the Application Servers. Failure of the left topmost datalink module results in automatic switchover to the right topmost datalink being the master datalink. All datalinks below the master and backup master datalink are slave datalinks. The left slave datalinks communicate only with the left master datalink and all amplifier cards within their respective chassis. All right slave datalinks communicate only with the left master datalink and all amplifier cards within their respective chassis. See Figure 3.3.2.C.b, IIS SPE Communication Paths

e. Power Supply Panel Assembly

The function of the power supply panel assembly is to convert AC power from the cabinet input to 24 VDC power. Figure 2.2-10, Figure 2.2-11, and Figure 2.2-12 show front, rear, and side views of the power supply panel assembly. The power supply panel assembly is designed to take as input one single phase AC power feed of 120 VAC at 60 Hz. Two pairs of power supplies provide redundant, auctioneered power output such that if one power supply fails, the second supply will be able to support the full power load of that pair. One pair of power supplies is rated to supply

up to 10A, and the other is rated to supply up to 20A. In the cabinet design, the 20A power supplies provide power to the SPE chassis, and the 10A power supplies provide power to the supportive electronics in the cabinet.

f. Media Converter Assembly

The function of the media converter assembly is to convert the serial RS-422 outputs of the master datalink cards to (copper) Ethernet and communicate with the Application Servers over duplex single mode fiber optic Ethernet. The active components on the media converter assembly are two serial device servers, which convert the serial input to Ethernet, and two media converters, which convert Ethernet on copper to Ethernet over fiber optics. The master datalink utilizes one serial device server/media converter pair and the redundant master datalink utilizes the other serial device server/media converter pair to communicate with the Application Servers

g. Cabinet Status Interface

The cabinet status interface assembly has two functions: provide a single termination location for cabinet status wiring and monitor temperature through use of an analog temperature sensor, which outputs a voltage proportional to the air temperature within the cabinet when supplied with power. All status signals input to the cabinet status interface and the temperature sensor output are sent to the datalink modules on the SPE chassis, where all analog signals are converted to digital values, and all status information is communicated to the external server

h. High Temperature Cutout Assembly

The function of the high temperature cutout is to shut off power to cabinet components when the temperature rises above 130°F (54°C). The purpose of shutting off the power is to protect the cabinet electronics which are not rated above 140°F. In the case of a high temperature, the temperature switch on the high temperature cutout closes, energizing the relay and opening the connection between the AC line filter panel and the power supply panel. Once the temperature has dropped sufficiently (nominally below 110°F (43°C)), the high temperature cutout can only be reset by cycling cabinet power.

i. Power Input Line Filter Assembly

The function of the line filter assembly is to protect the cabinet from faults on the power line, and to protect the power line from faults within the cabinet. Figure 2.2-19 shows the front view of the power input line filter assembly. The power first is connected through a circuit breaker to protect against overcurrent, then through a surge suppressor to protect against short duration overvoltage. The final component in the line filter assembly is a line filter, which is designed to limit the harmonics on the power line caused by the cabinet power supplies.

j. DC Distribution Assembly

The functions of the DC distribution assembly are to distribute DC power between the various electrical components within the cabinet, to provide an easy method to control the power to individual components or groups of components, and to provide overcurrent protection on those same components and groups of components.

9) D. WINCISE and PDMS Computer Cabinet (see Figure XXXX)

Cabinet status information and digitized neutron flux signals sent from the media converter assembly in each SPS cabinet is received by the Application Servers. The network of switches, media converters, and

servers in the WINCISE/PDMS Computer Cabinet is configured such that a loss or failure of any one component does not result in loss of information from the SPS cabinets. See Figure XXX through XXX for network configurations upon loss/failure of certain components.

To address cyber security, only the Application servers can communicate with ICS via a firewall. BEACON and SPS cabinet information (see Table XXXX) is provided to the Application servers before the Application Servers can provide/receive updated information to/from ICS.

a. Media Converter
Each Media converter converts a full set of incore flux signals (one pair of single mode fibers from 2-L-201 and 1 pair of single mode fibers from 2-L-202) from fiber optic Ethernet to copper Ethernet.

Since each media converter does convertion of a full set of incore flux data, loss of a media converter does not result in loss of data.

b. WINCISE IP Switch
The WINCISE IP Switches provide the main hub for traffic flow from the SPS cabinets, BEACON servers, Application Servers, and ICS.

c. Application Server
The Application Server's main function is to collect and distribute information from BEACON/PDMS, SPS cabinets, and ICS.

Since there are two Application Servers, 2-CPU-094-APPSVR/A [**W:**Drop 144] is by default the main server with 2-CPU-094-APPSVR/B [**W:** Drop 148] is on hot standby. The application server has the ability to control which side of the SPS cabinet it receives data from and can place the SPS cabinets in the "cable leakage test" mode upon receiving request from ICS.

d. Domain Server
The domain server and both Application Servers have a separate network from the WINCISE traffic. The Domain server provides a supportive function and is not required for the PDMS to receive needed information from the Application Server.

The Domain server has a database, engineering, and domain function.

It uses the Ovation Database to combine data located on the Application Servers into one logical database. This allows the capability to integrate and organize massive amounts of raw data without adding resource loads onto the Application Servers.

As an engineering role, the domain server provides an environment for the development and maintenance of application and system software. Programs, data, and configuration files can be retrieved from the Application Servers for the purpose of creating and maintaining the system configuration. As a result, the Domain Server can be used as the main gateway for users to monitor and control alarm conditions, enter point information, and create trends.

It serves a domain role by providing and handling security for the Ovation network created between the Application Servers and the Domain Server. The Ovation Security Manager allows for the domain server to prevent unauthorized use and unauthorized actions plus the assignment of security roles for users and computers in that domain.

e. BEACON/PDMS Servers

The BEACON servers are the Power Distribution Monitoring System and allow the plant to accurately analyze core operating conditions and perform core behavior predictive calculation. The BEACON servers are not configured to be redundant (i.e. Failure of primary BEACON server does not result in backup assuming the primary role). User intervention is required to switch the backup BEACON server from its Predictive Mode to Primary.

BEACON-TSM is designed to be integrated into plant Technical Specifications (TS) such that all normal and core power surveillance requirements can be replaced by the BEACON core monitoring of core power limits. Additionally, the PDMS can be used for calibration of the excore flux detectors, monitoring the Quadrant Power Tilt Ratio, or verifying the position of a rod with inoperable position indicators

EDCR 52321-A
page 150

3.3.1 Reactor Coolant System

The ~~thimble~~ ITA and ~~thimble~~ BMI guide tubing connect to the reactor pressure vessel and extend the pressure boundary to the seal table.

~~The Incore Thermocouple connect to guide tubes which penetrate the reactor vessel head~~. ~~The guide tubes are an integral part of the reactor vessel~~. The thermocouple signals are monitored by the Inadequate Core Cooling Monitor (ICCM) which is part of the Reactor Coolant System. Also, the ICCM supplies thermocouple temperature information to the Incore Thermocouple Temperature Recorders and to the Plant Computer System.

3.3.2 Electric Power Systems

The SPS Cabinets are supplied 120 VAC ~~The Drive Unit Motors are supplied 3-ph 460V AC~~, 60 Hz power from the ~~480 V Reactor Vent Boards~~. 120 V Vital Boards

The ~~Incore Flux Mapping Subsystem Control Cabinets (M-18) are~~ WINCISE/PDMS Computer Cabinet is supplied 120V AC, 60 Hz power from the MCR (M-7) 120 V AC Instrument Control Power.

The Incore Thermocouple Temperature Recorders are supplied power from the 120V AC Vital Instrument Supply.

3.3.3 Equipment and Floor Drainage System

Tubing below the Seal Table allows drainage ~~The IFMS leak detection system (Section 3.2.2F.11) will release drainage from the thimble guide tubing~~ to the plant Equipment and Floor Drainage System (Reference 7.2.20).

4.0 SPECIAL OPERATIONS - FOR INFORMATION ONLY

4.1 Procedures at Refueling

~~At refueling time, the first step will be to remove the movable frame assembly from above the seal table to provide the necessary space for the in-core thimble retraction operations~~. The ~~detectors and leading ends of~~ leading ends of ITA ~~the drive cables~~ will be at a high radiation level at this time. ~~They should, therefore, be routed to the shielded storage thimbles~~. Proceed as follows:

A. ~~Disconnect the tubing runs between the 5-path and 10-path transfers and remove them to a storage area, taking precautions not to cause damage and to keep the insides of the tubes clean and dry. (Note that if these tubing runs are not already clearly identified with individual numbers, identification should be added to facilitate reinstallation.)~~ Ensure CETs and/or SPD are no longer required (i.e. Mid-loop operation)

B. Disconnect ~~the leakage drain connection from the movable frame assembly~~. connectors for ITAs at seal table

C. ~~Loosen the unions connecting the tubing runs to the seal table and raise the isolation valve mounting angles by adjusting the two jackscrews until the tubing runs clear the thimbles~~. Retract ITAs by hand or use Jacking Tool (Ref. 7.1.15-7.1.19)

D. ~~Remove the two bolts attaching the movable frame assembly to the anchor angles on the support structure. The movable frame assembly may now be carefully rolled along the rails to the storage area to provide space for thimble retraction.~~ Secure ITAs to modified moveable frame assembly

EDCR 52321-A
page 151

4.1 Procedures at Refueling (continued)

~~E. Bolt the movable frame anchor plates to the two storage position anchor angles. To prevent damage, care should be taken to check that the assembly is vertically clear of the seal table unions before permitting lateral movement.~~

F. After refueling is completed, reinstall the ~~movable assembly and reconnect the tubing runs in accordance with the identification numbers.~~ IITAs and connect MI cables to match etching on connectors

Advantage should be taken at refueling downtimes to perform any required maintenance on ~~the drive units, drive cables, or transfer devices.~~ the SPS cabinets

There are no manual actions which have been credited for any accident scenario; nor, are there any administrative controls or system operational constraints or limitations for which design credit has been taken with respect to the Incore Instrumentation System.

5.0 CASUALTY EVENTS AND RECOVERY PROCEDURES - FOR INFORMATION ONLY

5.1 System Leakage

If a reactor coolant leak should develop in any of the incore thimbles, it may be ~~detected by the leak detection system (refer to Section 3.2.2F.11) or by~~ indicated abnormal radiation levels within the plant containment. ~~Also, difficulty of detector insertion may indicate a leaky thimble.~~ If such a leak has been detected, and if it is large, it should be possible to readily determine which thimble is faulty by visual observation~~, at the path indicator switches (after removal of the covers).~~ If only a small leak exists, it may be possible to determine which thimble is affected by lightly touching the ~~tubes between the seal table and isolation valves~~ IITA connector to find one having a higher temperature than the others.

~~Proof of a small leak can best be done by inserting a dummy cable manually into the suspected thimble. If water is collected, it can be chemically analyzed to determine if it is reactor coolant. After identification of the leaking thimble, a small leak can be isolated during either a hot or cold shutdown by manually closing the appropriate isolation valve. A large leak would probably require cold shutdown for access to the valves. The incore thimble could be capped in lieu of using the manual isolation valve.~~

~~**5.2 Failure of One Detector or Drive Unit**~~

~~If one detector or drive unit fails to operate properly, but the drive cable is not stuck in a rotary transfer device, a full core map can be made by using another detector. Proceed as normal for the paths supplied by the good detectors. Then utilize the detector whose EMERGENCY path is routed to the 10-path transfer of the inoperative drive to complete the core map. The EMERGENCY thumbwheel settings must be dialed-in prior to each insertion. Alternatively, complete manual position control may be used.~~

~~Operation in the EMERGENCY mode requires that a detector be driven into a 10-path transfer normally used by another detector. Caution should be taken to avoid insertion of two detectors into the same path.~~

EDCR 52321-A
page 152

~~5.3 Operation Without Position Indication~~

~~Use caution in this abnormal mode of operation as there is danger that the detectors may be driven against the ends of the thimble runs, where dependence would be on the slip clutches to prevent damage. The possibility of causing damage to the detectors must be weighed against the need for using this method.~~

~~Even if there is complete loss of position indication (and consequently loss of automatic position control at bottom and top-of-core), it may still be possible to obtain flux maps by manual manipulation of controls. Following the same steps used in a normal flux-mapping procedure (see Reference 7.1.1), proceed to the point where the detectors are approaching the bottom-of-core position. This can be ascertained by observing increasing signals from the detector. At this point, proceed as follows:~~

~~A. Turn the MODE switch to MAN.~~

~~B. Turn the SPEED switch to LO and manually start the recorder chart.~~

~~C. Use the INSERT WITHDRAW toggle switch to run the detectors one at a time through the normal scan and record operations. Top-of-core stopping position can be estimated by observations of drop-off of the signals to the values expected near the top.~~

~~D. After completing the scan and record operations, return MODE switch to AUTO and withdraw the detectors.~~

6.0 MAINTENANCE AND TESTING COMMITMENTS - FOR INFORMATION ONLY

WBN in response to IE Bulletin 88-09 committed to eddy current testing for thimble wear during refueling outages.

For unit 2, there exist enough information to conclude that thimble wear will not be an issue. As a result, no eddy current during refueling outages will be required.

7.0 REFERENCES - FOR INFORMATION ONLY

7.1 Westinghouse Documents

7.1.1 Technical Manual for ~~In-Core Instrumentation - Volumes 1 and 2~~ Westinghouse INCore Information, Surveillance and Engineering (WINCISE) System

7.1.2 Drawing 27641-Series (12 sheets), Teleflex Incorporated, latest revision

7.1.3 WAT/WBT 300/21 - "Functional Requirements - Reactor Vessel Level Instrumentation System," Revision 4

7.1.4 Westinghouse Technical Description - "Inadequate Core Cooling Monitoring System - 86 in Response to the TVA Functional Requirements Document Dated 12-1-87," dated June 1988

7.1.5 Westinghouse Equipment Specification 953302, Revision 2, dated 6-20-78

7.1.6 Drawing ~~1096E91~~ 10046E42-Series (4 sheets), "~~WAT-WBT Instrumentation Bottom Mounted,~~" latest revision

"WBT (WATTS BAR UNIT 2) INSTRUMENTATION BOTTOM MOUNTED"

EDCR 52321-A
page 153

7.1 Westinghouse Documents (continued)

7.1.7 Westinghouse Equipment Specification 953262, Revision 0, dated 8-19-76

7.1.8 Westinghouse drawing 10002E84, Flanged CETNA Assembly and Details.

see next page for additional references to add

7.2 TVA Documents

7.2.1 Nuclear Quality Assurance Plan TVA-NQA-PLN89A

7.2.2 Nuclear Power Standard - Quality Assurance Program STD 3.1

7.2.3 Nuclear Power Standard - Augmented QA Program STD 3.2

7.2.4 ASME III Quality Assurance Manual (ASME III QAM)

7.2.5 WB-DC-30-4, "Separation/Isolation"

7.2.6 WB-DC-30-7, "Post Accident Monitoring Instrumentation"

7.2.7 WB-DC-30-20, "Control Panels"

7.2.8 WB-DC-30-23, "Human Factors"

7.2.9 WB-DC-30-27, "AC and DC Control Power System"

7.2.10 WB-DC-30-28, "Low and Medium Voltage Power Systems"

7.2.11 WB-DC-40-31.2, "Seismic Qualification of Category I Fluid System Components and Electrical or Mechanical Equipment"

7.2.12 WB-DC-40-31.12, "Seismic Qualification of Category I and I(L) Valves and Other Inline Fluid System Components"

7.2.13 WB-DC-40-31.13, "Seismic Qualification of Category I(L) Fluid System Components and Electrical or Mechanical Equipment"

7.2.14 WB-DC-40-31.7, "Analysis of Category I and I(L) Piping Systems"

7.2.15 WB-DC-40-31.9, "Criteria for Design of Piping Supports and Supplemental Steel in Category I Structures"

7.2.16 WB-DC-40-31.50, "Evaluating the Effects of a Pipe Rupture Inside and Outside Containment"

7.2.17 WB-DC-40-36, "Classification of Piping, Pumps, Valves and Vessels"

7.2.18 WB-DC-40-42, "Environmental Design"

7.2.19 WB-DC-40-54, "Environmental Qualification to 10CFR50.49"

7.1 Westinghouse Documents (continued)

7.1.9 6657E27 - series, OPARSSEL IITA

7.1.10 10034E85, * OPARSSEL IITA (customer drawing)

7.1.11 420A90 Rev 1, WINCISE FUNCTIONAL SPECS

7.1.12 NO-WBT-002, WINCISE SYSTEM TECH MANUAL

7.1.13 LTR-NO-10-94, IITA Technical / Instruction Manual

7.1.14 WNA-GO-00075-WBT, WINCISE SPS Cabinet Operation & Maintenance Manual

7.1.15 DP-ME-09-1, Tech manual for the WBT cable and connector upgrade

7.1.16 EQ-QR-39-WBT, WINCISE cabinet EQ Summary

7.1.17 DAR-ME-09-10, Cable EQ ~~Qual~~ Report

7.1.18 WNA-IS-00061-WBT, WINCISE storage & Installation Instructions

7.1.19 IM-0013, Jacking Tool Manual

7.1.20 WNA-WD-00824-WBT WINCISE SPS cable routing and wiring instructions

7.2 TVA Documents (continued)

7.2.20 WB-DC-40-61, "Equipment and Floor Drainage System"

7.2.21 WB-DC-40-64, "Design Basis Events Design Criteria"

7.2.22 WB-DC-40-65, "Missiles"

7.2.23 N3-68-4001, "Reactor Coolant System"

7.3 Codes, Standards, and Regulatory Guides

7.3.1 ASME Boiler and Pressure Vessel Code, Section III

7.3.2 10CFR20, "Standards for Protection Against Radiation"

7.3.3 10CFR50, Appendix A, "General Design Criteria for Nuclear Power Plants"

7.3.4 10CFR100, "Reactor Site Criteria"

7.3.5 Regulatory Guide 1.97, Revision 2, "Instrumentation for Light-Water-Cooled Nuclear Power Plants to Assess Plant and Environs Conditions During and Following an Accident"

7.3.6 NUREG 0737, "Clarification of TMI Action Plan Requirements"

7.3.7 10CFR50 Appendix B - "Quality Assurance Criteria for Nuclear Power Plants and Fuel Reprocessing Plants"

7.3.8 IEEE 323-1974 - "IEEE Standard for Qualifying Class 1E Equipment for Nuclear Power Generating Stations"

7.4 Calculations

7.4.1 FSAR TMI (NUREG-0737) Instrumentation Device Identification - WBPEVAR8603010, Rev. 2 (RIMS No. B18 910604 259)

7.4.2 ICCM Incore Thermocouple System Uncertainty Report - ICCM URI, Rev. 4

7.4.3 Incore Temperature Monitoring System (94) NUREG 0588 Category and Operating Times - WBN-OSG4-028, Rev. 6

7.4.4 Environmental Qualification for NUREG-0737 - WBN-OSG4-069, Rev. 3 (RIMS No. B18 930208 253)

7.5 Other

7.5.1 Letter from J. A. Domer to Ms. E. Adensam, dated September 19, 1985 (RIMS No. L44 850919806)

EDCR 52321-A
page 156

8.0 FIGURES - FOR INFORMATION ONLY

8.1 Distribution of ~~Flux Thimbles and Thermocouples~~ IITAs

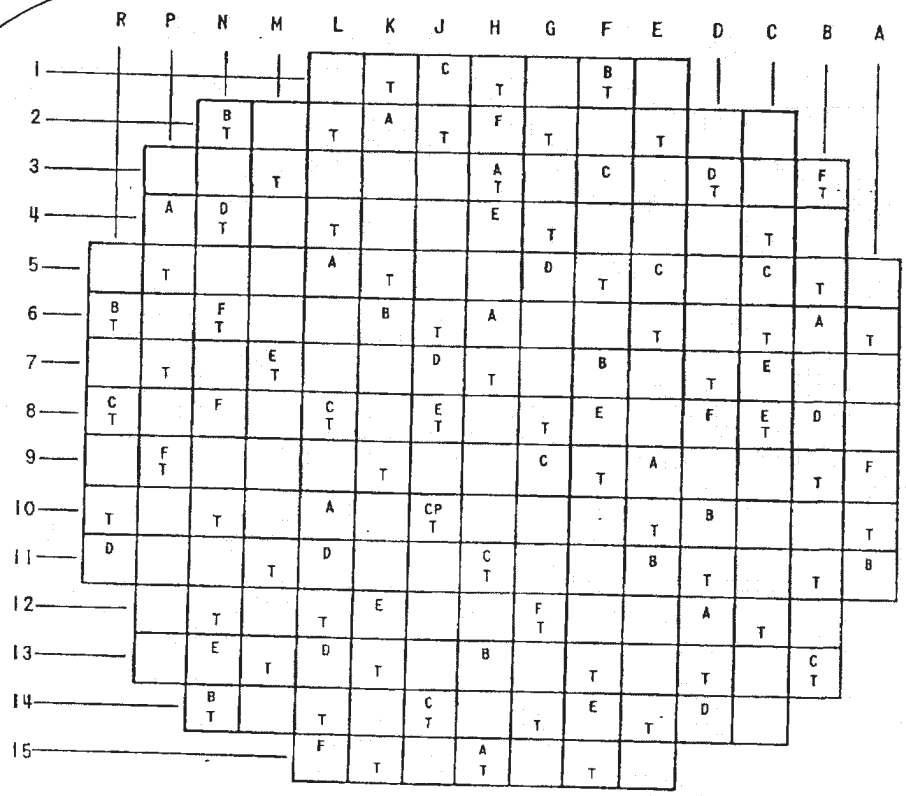

A - FLUX THIMBLE, DETECTOR A
B - FLUX THIMBLE, DETECTOR B
C - FLUX THIMBLE, DETECTOR C
D - FLUX THIMBLE, DETECTOR D
E - FLUX THIMBLE, DETECTOR E
F - FLUX THIMBLE, DETECTOR F
CP - CALIBRATION FLUX THIMBLE (COMMON PATH)
T - THERMOCOUPLE

Figure 8.1
Distribution of Flux Thimbles and Thermocouples

Replace with figure from following page

REACTOR BUILDING 180 AZ. | REACTOR VESSEL 0 AZ.

N

270 AZ.

90 AZ.

	A	B	C	D	E	F	G	H	J	K	L	M	N	P	R	
15								58			29					15
14				57		28			56				55			14
13		27						26			54		25			13
12				53			52			24						12
11	51				23			22			50				21	11
10				49					48		20					10
9	19				18		47							46		9
8		45	17	44		43			16		42		15		14	8
7			41			13			40			39				7
6		12						11		10			9		38	6
5			8		37		7				6					5
4								36					35	5		4
3		34		4		33		3								3
2								32		31			2			2
1						30			1							1
	A	B	C	D	E	F	G	H	J	K	L	M	N	P	R	

REACTOR BUILDING 0 AZ. | REACTOR VESSEL 180 AZ.

Figure 8.1

Distribution of IITAs

EDCR 52321-A
page 158

RAA 1/18/11

8.2 ~~Reactor Vessel Cross-Section Showing Incore Instrumentation System~~ ~~System Classification in Containment~~ ITA general Arrangement

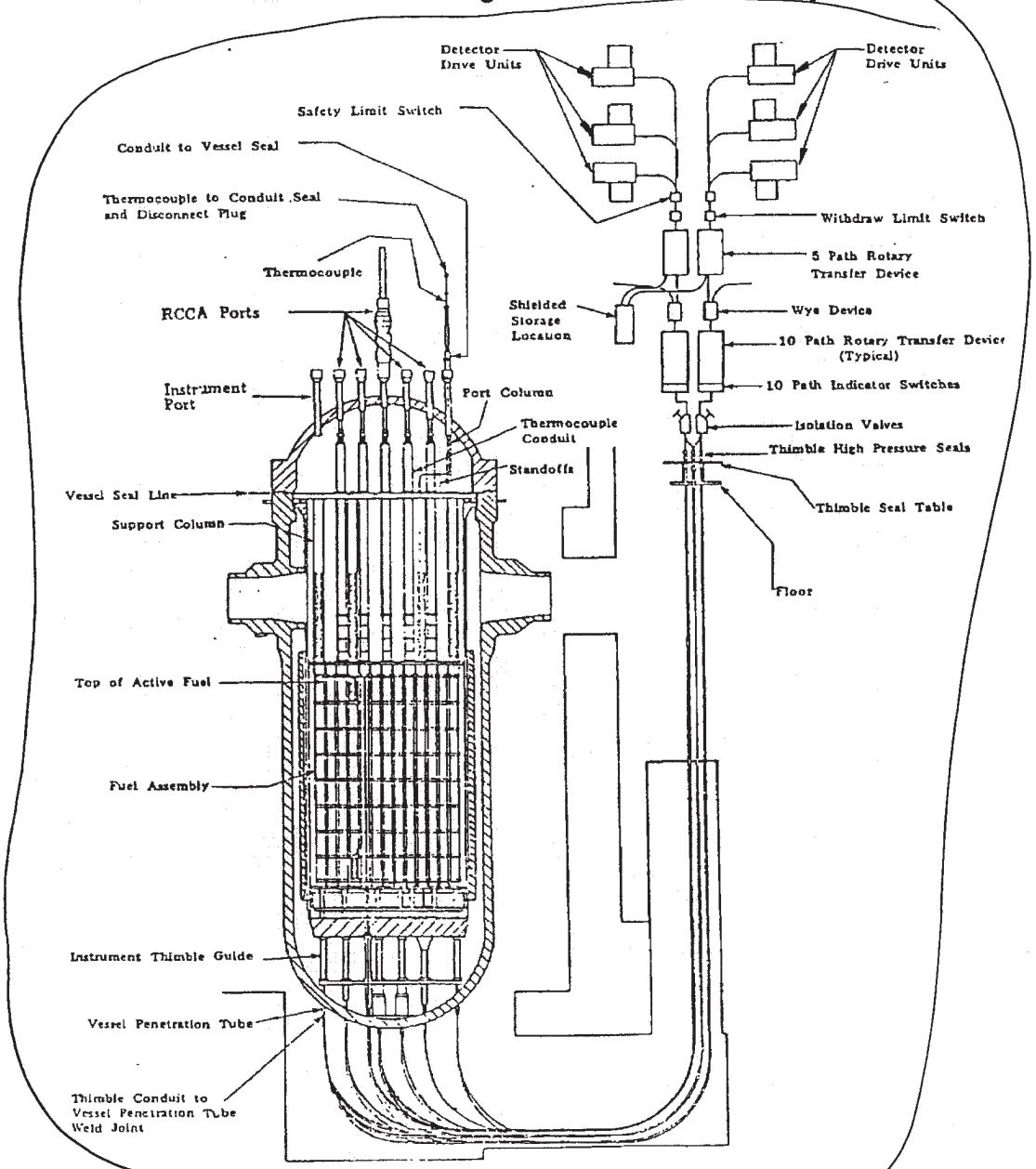

Figure 8.2
Reactor Vessel ~~Cross Section Showing~~
Incore Instrumentation System

Replace with figure in following page

EDCR 52321-A
page 159

8.2 IITA General Arrangement

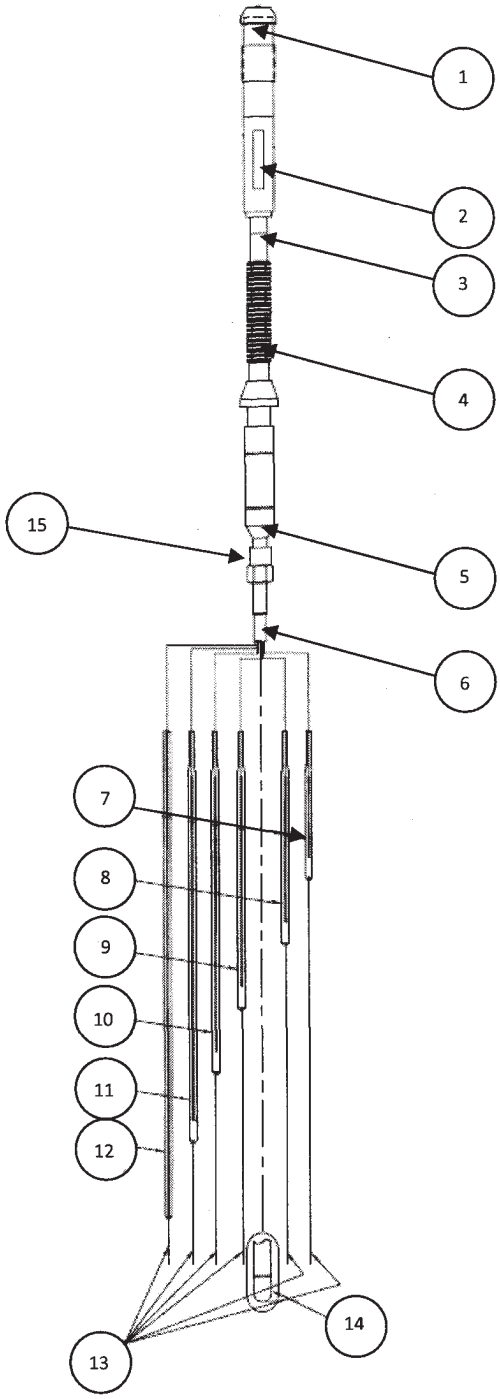

1) Connector Receptacle Assembly
2) Backshell Assembly
3) Extension Tube
4) Flexible Hermetic Hose Assembly
5) Header
6) Outer Sheath Tube Assembly
7) Vanadium Detector 5
8) Vanadium Detector 4
9) Vanadium Detector 3
10) Vanadium Detector 2
11) Vanadium Detector 1
12) Thermocouple Assembly
13) Extension Members
14) Bullet Nose
15) Compression Fitting Nut

Figure 8.2 IITA General Arrangement

EDCR 52321-A
page 160

~~8.3 Pictorial View of the Incore Neutron Flux Detector Insertion System~~

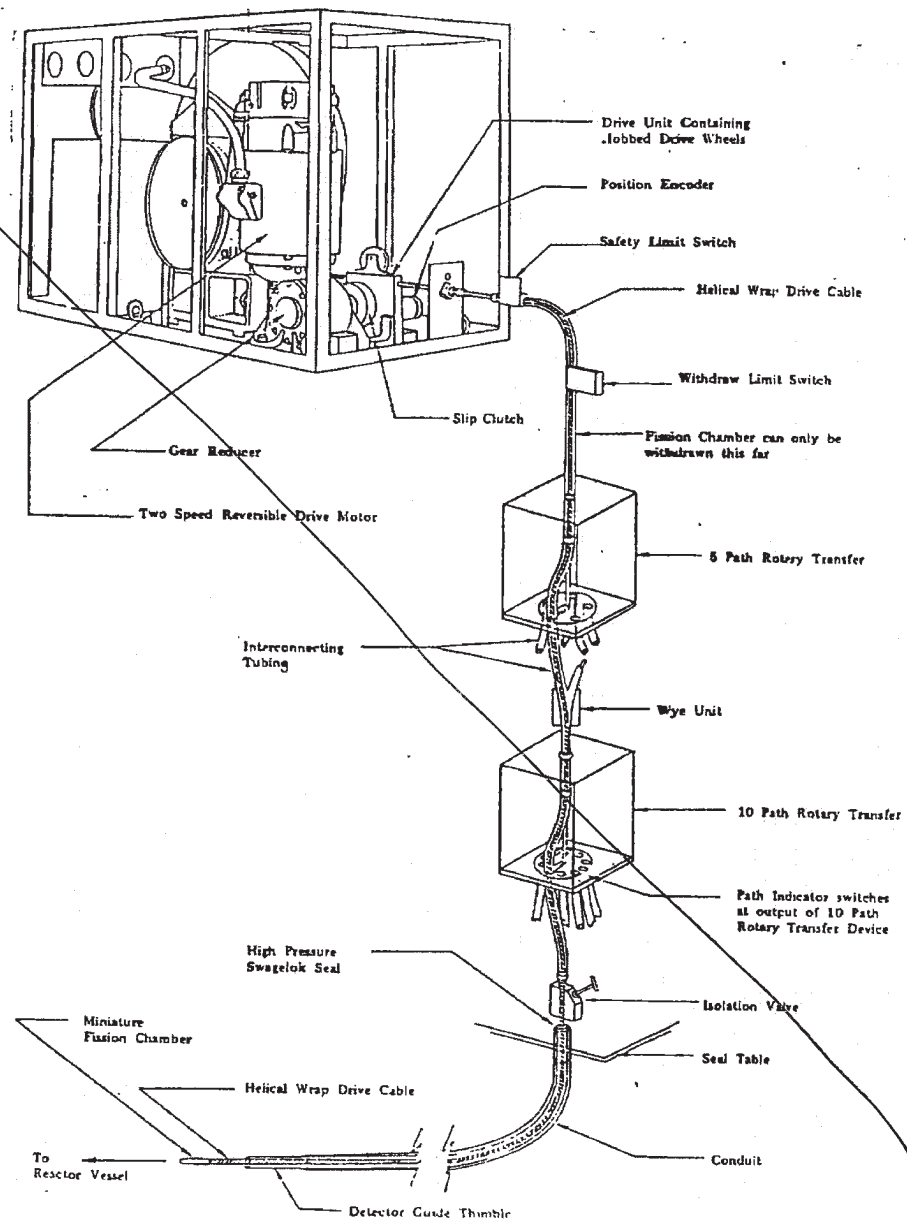

Figure 8.3
Pictorial View of the Incore
Neutron Flux Detector Insertion System

Replace with following page

8.3 System c

EDCR 52321-A
page 161

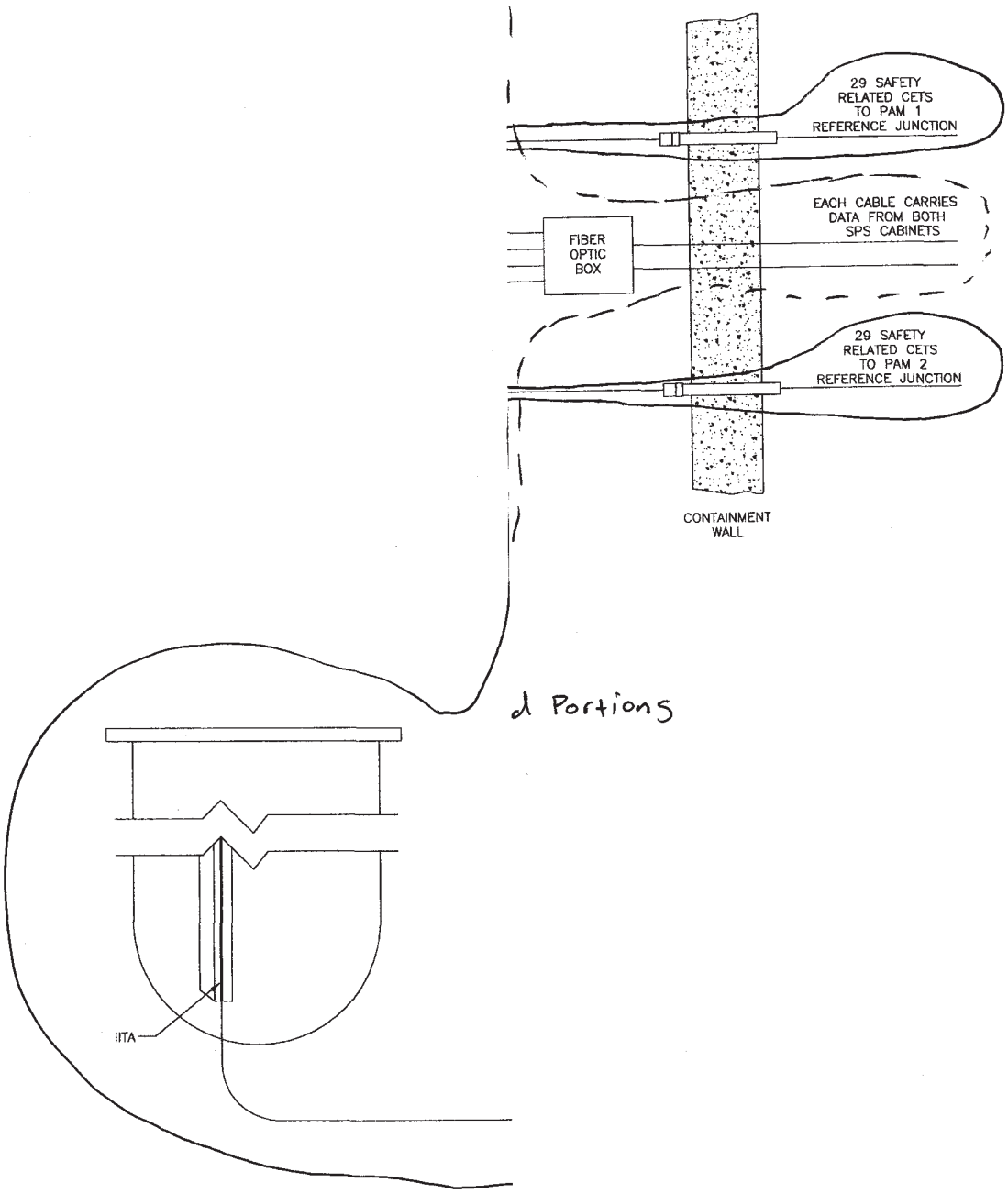

EDCR 52321-A
page 162

~~8.4 Incore Flux Detector Insertion System~~

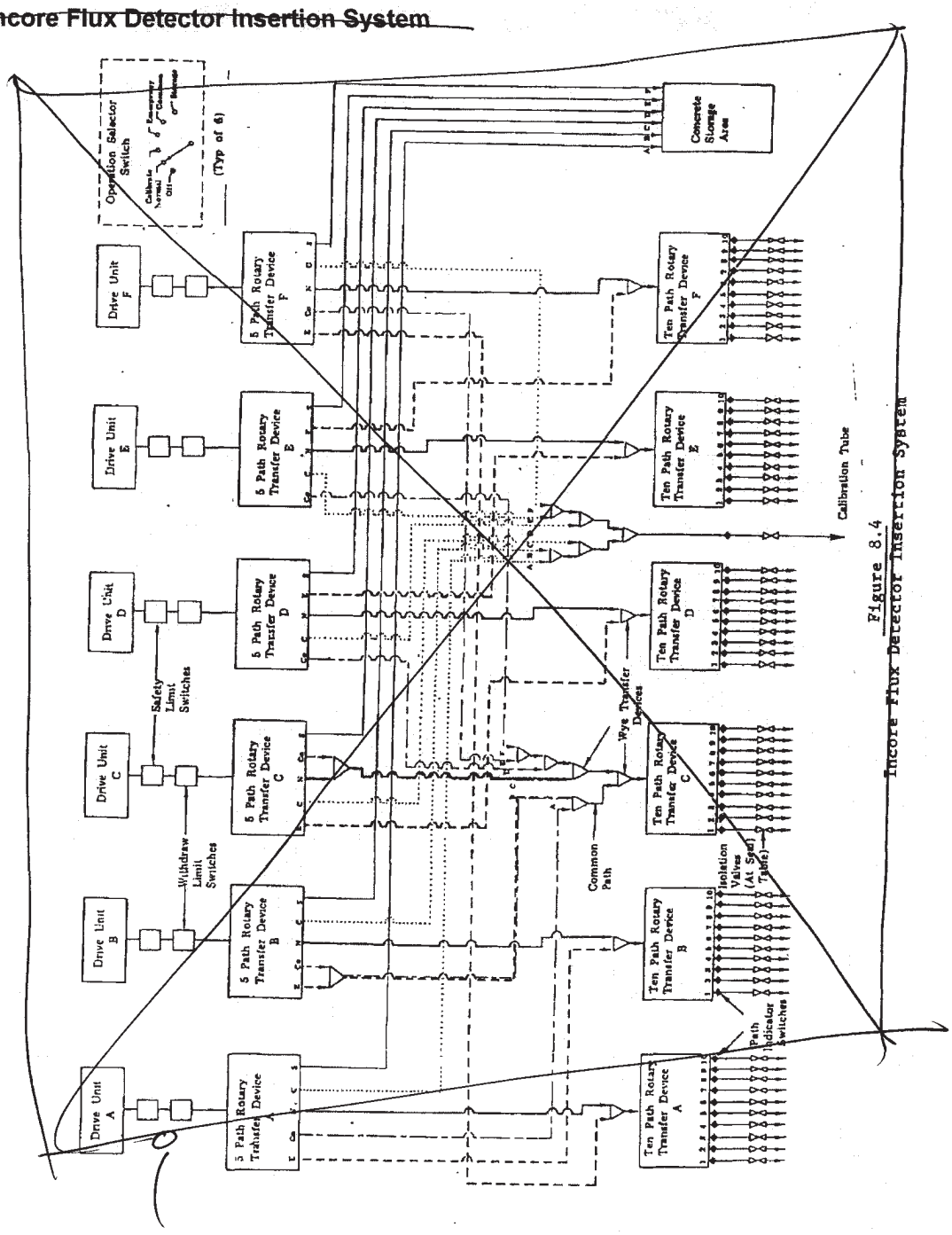

Figure 8.4
Incore Flux Detector Insertion System

Replace with following figure

Figure 8.4 - SPS Cabinet Data Flow

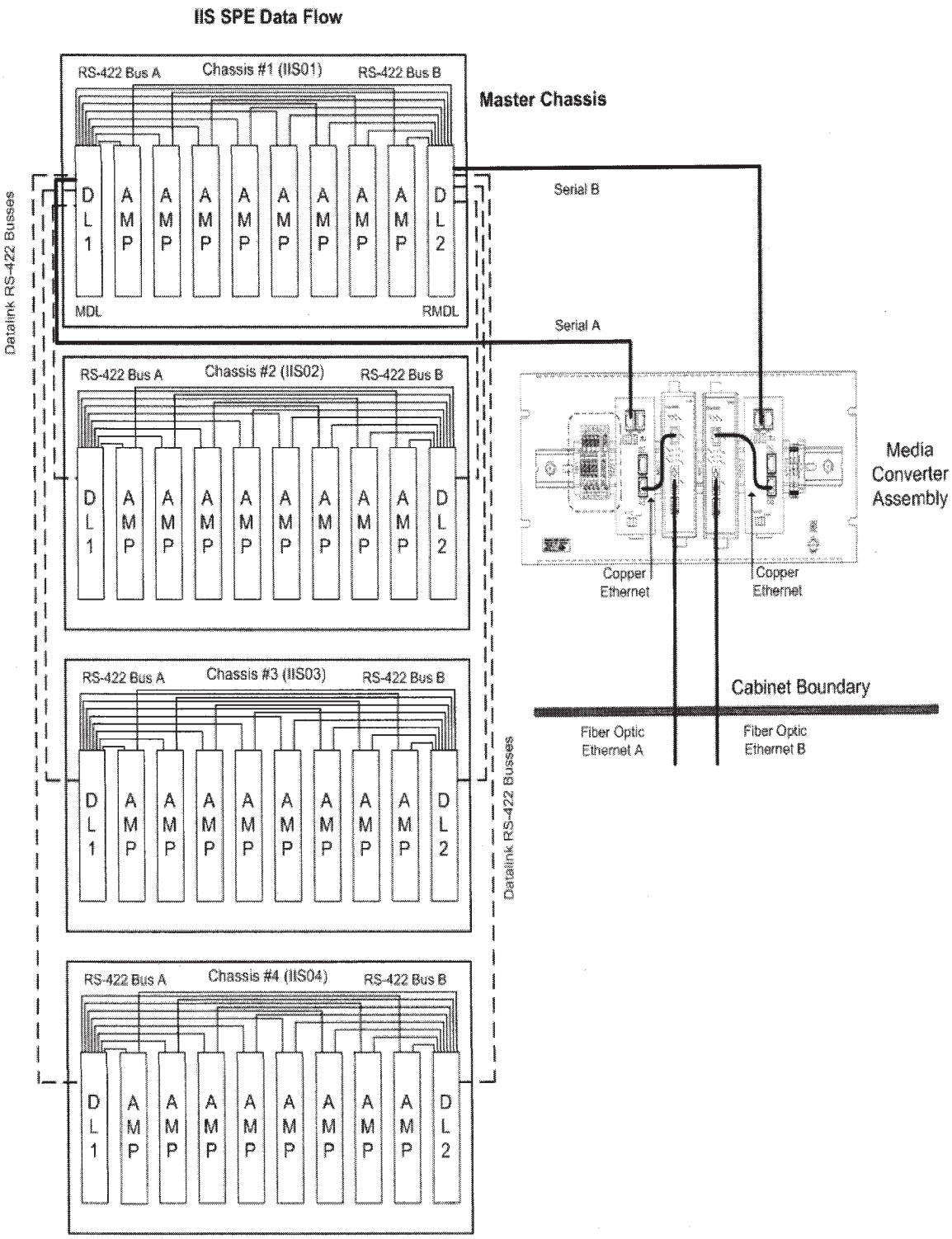

Figure 8.4

SPS Cabinet Data flow

EDCR 52321-A
page 164

8.5 Incore Thermocouple (Core Exit Thermocouple - CET) Cable Layout

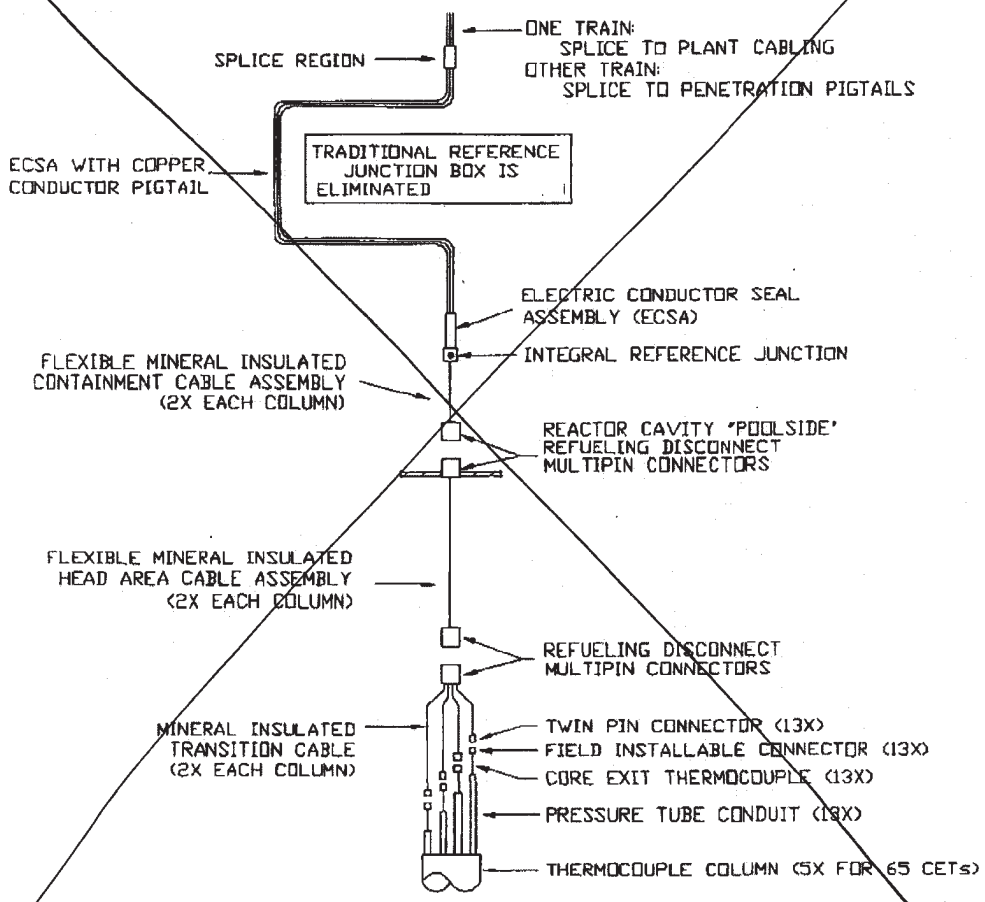

Westinghouse Electric Company	*CET MI Cable Layout*	Figure 8.5

Replace with following figure

Figure 8.5 – SPS and App Server A Configuration

EDCR 52321-A
page 165

AppSrvr A in primary mode.

There are no connections from AppSrvr B to either SPS cabinet when it is in backup. This is to avoid the conflict from a server supporting two clients simultaneously

Failure of switch A will dictate the alternate (dashed) paths be used.

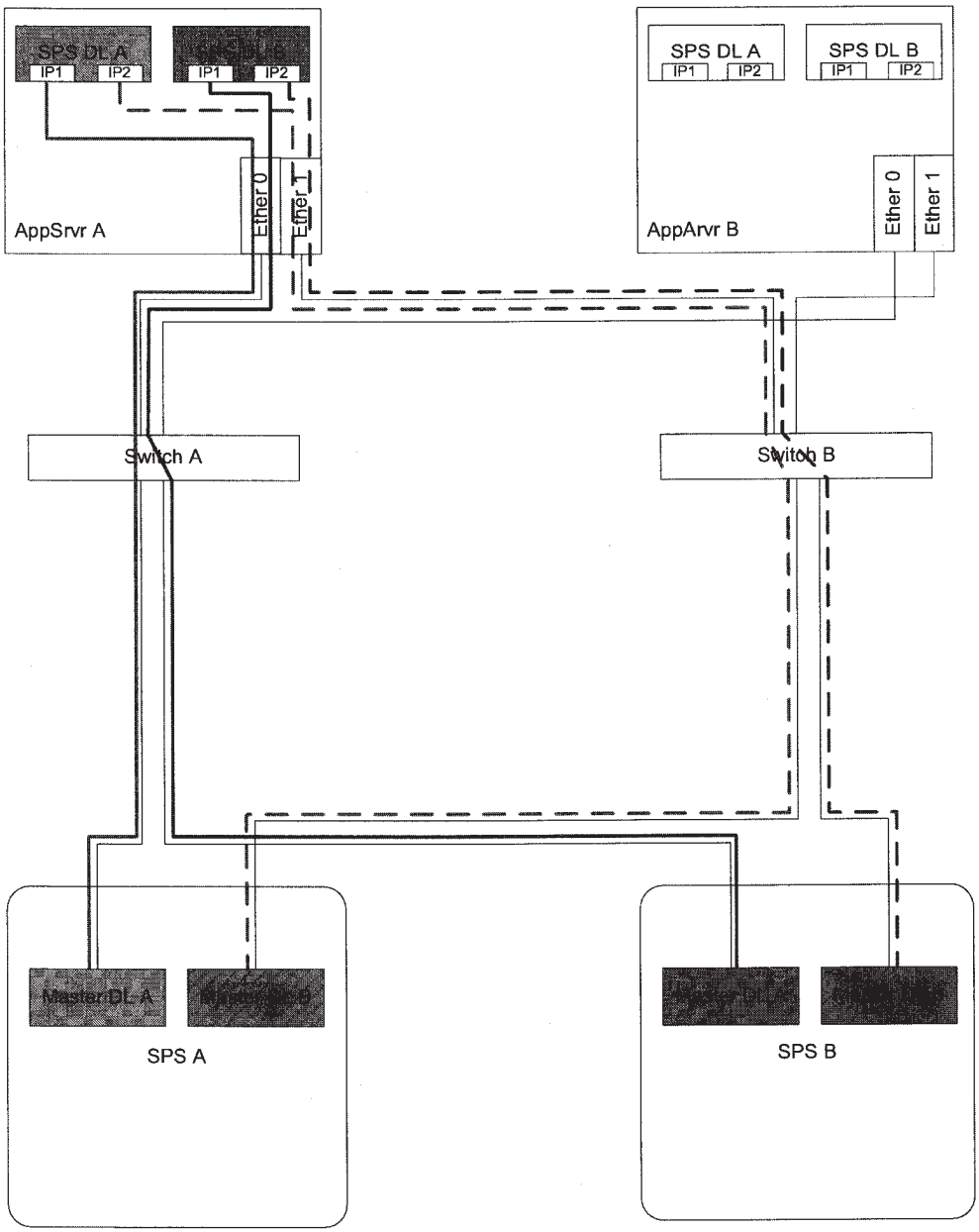

Figure 8.5

Configuration of data flow with Application server A as primary

Figure 8.6 – SPS and App Server B Configuration

EDCR 52321-A
Page 166

AppSrvr B in primary mode.

There are no connections from AppSrvr A to either SPS cabinet when it is in backup. This is to avoid the conflict from a server supporting two clients simultaneously

Failure of switch A will dictate the alternate (dashed) paths be used.

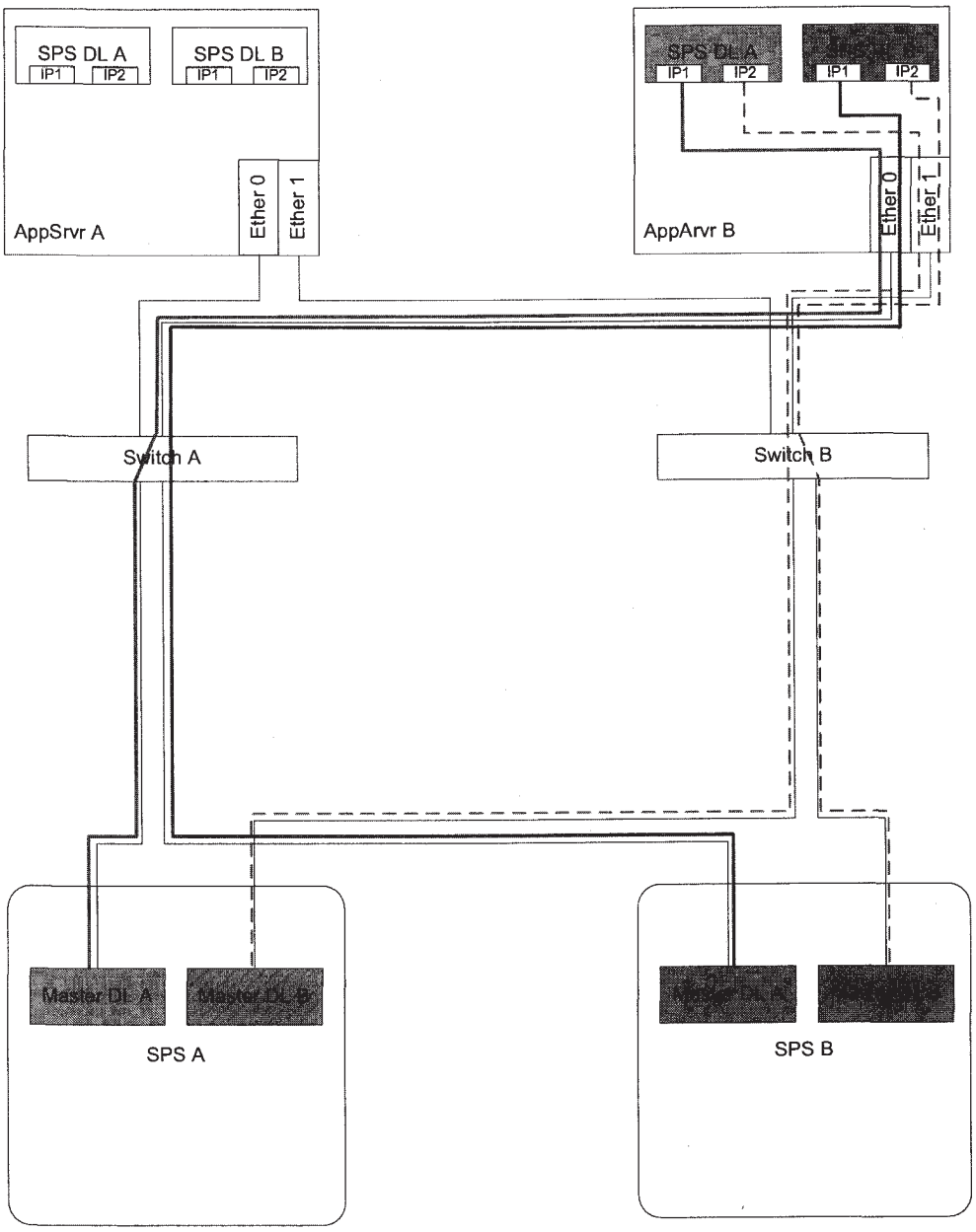

Figure 8.6

Configuration of data flow with Application Server B as primary

Figure 8.7 - App Server and BEACON configuration

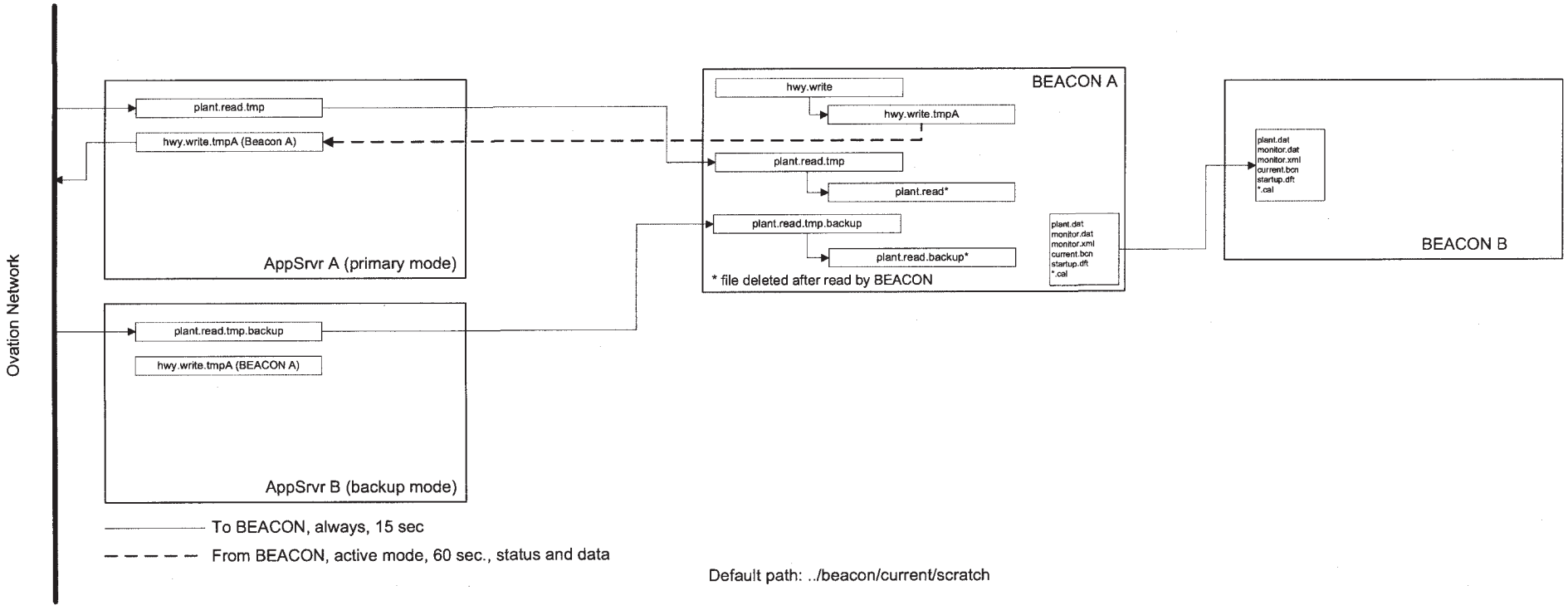

Figure 8.7

Data flow between App Servers and BEACON/PDMS

EDCR 52321-A
page 168

Source Notes
(Page 1 of 1)
FOR INFORMATION ONLY

Source Note Number	Source Note Tracking Number/Document	Applicable Section(s)
1	NCO 940190 001 NCO 940190 002	6.0

EDCR 52321-A
page 169

Attachment 1
(Page 1 of 1)

ABBREVIATIONS AND ACRONYMS

ASME	American Society of Mechanical Engineers
dc	Direct Current
ERFDS	Emergency Response Facility Data System
°F	Degrees Fahrenheit
ft-lb	Foot-pounds (Torque)
ft/min	Feet Per Minute (Speed)
Hz	Hertz
ICCM	Inadequate Core Cooling Monitor
ICTC	Incore Thermocouple
IFMS	Incore Flux Mapping Subsystem
IIS	Incore Instrumentation System
ITS	Incore Thermocouple Subsystem
lb/in^2g	Pounds Per Square Inch-Gage
MCR	Main Control Room
mA	Milli-Ampere (10^{-3})
µA	Micro-Ampere (10^{-6})
PAM	Post Accident Monitoring
ph	Phase
r/min	Revolutions Per Minute
RPV	Reactor Pressure Vessel
RTDs	Resistance Temperature Detectors
RVLIS	Reactor Vessel Level Instrumentation System
V	Voltage

BMI - Bottom Mounted Instrumentation
IITA - Incore Instrument Thimble Assembly
PDMS - Power Distribution Monitoring System
SPS - Signal Processing System

TVA **NPG Design Criteria Document**	**TITLE** **DESIGN BASIS EVENTS DESIGN CRITERIA**	**WB-DC-40-64** **Rev. 12** **Page i of 732** Quality Related ☑ Yes ☐ No EDCR 52321 Page 170 Effective Date 08-17-2009

Prepared by:	J. V. Ware, Jr.	
Reviewed by:	J. F. Lund	08-13-2009 Date
Concurred by:	J. F. Lund	08-13-2009 Date
Approved by:	D. M. Viscusie Civil/Mechanical Design Engineering Manager	08-13-2009 Date

Title: DESIGN BASIS EVENTS DESIGN CRITERIA		REVISION LOG WB-DC-40-64
REVISION NO.	DESCRIPTION OF REVISION	DATE APPROVED

EDCR 52321
PAGE 171

12	Incorporates EDC 53651 as follows: These changes are made to Section 4.41 to clarify that a Station Blackout (SBO) event is not a design basis event and has not been categorized for any event frequency by ANSI Standard N18.2-1973. Consequently, a Station Blackout should not be considered a Condition III event. The event description, duration, and mitigation of the non-design basis event are clarified to be consistent with the requirements of 10 CFR 50.63, RG 1.155 and the NRC approved WBN Station Blackout licensing submittal. Total Pages: 732 (includes pages i-xi and 1-721)	08-17-2009
13	Incorporate EDCR 52321 as follows: These changes are made to Section 4.37 to clarify: 1) that Unit 2 will be able to detect improperly loaded fuel using the Power Distribution Monitoring System (PDMS) instead of the Moveable Incore Detection System 2) that the moveable incore detectors and PDMS are used in Mode 1 not Mode 2. Consequently, an improperly loaded fuel will be detected in Mode 1 not Mode 2. After review of Watts Bar Nuclear Plant "Safety Evaluation Report", Section 15.2.4.5, the statement "as part of required startup testing, the incore detector system is used to detect misloaded fuel before operating at power" was misinterpreted. The statement in SER is understood to mean "as part of required startup testing, the incore detector system [Incore Instrumentation System] is used to detect misloaded fuel before operating at [full] power."	

EDCR 52321
PAGE 172

ABBREVIATIONS AND ACRONYMS

AC	-	Alternating Current
ADMSS	-	Accidental Depressurization of Main Steam System
AIF	-	Atomic Industrial Forum
ANS	-	American Nuclear Society
ANSI	-	American National Standards Institute
AOI	-	Abnormal Operating Instruction
ASME	-	American Society of Mechanical Engineers
CCP	-	Centrifugal Charging Pump
CCS	-	Component Cooling System
CCW	-	Condenser Circulating Water
CFR	-	Code of Federal Regulations
CRDM	-	Control Rod Drive Mechanism
CRDS	-	Control Rod Drive System
CVCS	-	Chemical and Volume Control System
DBE	-	Design Basis Event
DBF	-	Design Basis Flood
DC	-	Direct Current
DNB	-	Departure from Nucleate Boiling
DNBR	-	Departure from Nucleate Boiling Ratio
ECCS	-	Emergency Core Cooling System
EOI	-	Emergency Operating Instruction
EPRI	-	Electric Power Research Institute
EQ	-	Environmental Qualification
ERCW	-	Emergency Raw Cooling Water
ERG	-	Emergency Response Guidelines
ESFA	-	Engineered Safety Features Actuation System
FLB	-	Feedwater Line Break
FSAR	-	Final Safety Analysis Report
GDC	-	General Design Criteria (10CFR50 Appendix A)
HELB	-	High Energy Line Break
HMS	-	Hydrogen Mitigation System
HRCS	-	Hydrogen Recombiner System
IEEE	-	Institute of Electrical and Electronics Engineers
LOCA	-	Loss of Coolant Accident
LOOP	-	Loss of Offsite Power
MELB	-	Moderate Energy Line Break
MFLB	-	Main Feedwater Line Break
MSL	-	Main Steam Line
MSLR	-	Main Steam Line Rupture
NPSH	-	Net Positive Suction Head
NRC	-	Nuclear Regulatory Commission
NSSS	-	Nuclear Steam Supply System
OBE	-	Operating Basis Earthquake
PMF	-	Probable Maximum Flood
PMP	-	Probable Maximum Precipitation
PORV	-	Power Operated Relief Valve
PTS	-	Pressurized Thermal Shock
PDMS	-	POWER DISTRIBUTION MONITORING SYSTEM

EDCR 52321
PAGE 173

ABBREVIATIONS AND ACRONYMS

AC	-	Alternating Current
ADMSS	-	Accidental Depressurization of Main Steam System
AIF	-	Atomic Industrial Forum
ANS	-	American Nuclear Society
ANSI	-	American National Standards Institute
AOI	-	Abnormal Operating Instruction
ASME	-	American Society of Mechanical Engineers
CCP	-	Centrifugal Charging Pump
CCS	-	Component Cooling System
CCW	-	Condenser Circulating Water
CFR	-	Code of Federal Regulations
CRDM	-	Control Rod Drive Mechanism
CRDS	-	Control Rod Drive System
CVCS	-	Chemical and Volume Control System
DBE	-	Design Basis Event
DBF	-	Design Basis Flood
DC	-	Direct Current
DNB	-	Departure from Nucleate Boiling
DNBR	-	Departure from Nucleate Boiling Ratio
ECCS	-	Emergency Core Cooling System
EOI	-	Emergency Operating Instruction
EPRI	-	Electric Power Research Institute
EQ	-	Environmental Qualification
ERCW	-	Emergency Raw Cooling Water
ERG	-	Emergency Response Guidelines
ESFA	-	Engineered Safety Features Actuation System
FLB	-	Feedwater Line Break
FSAR	-	Final Safety Analysis Report
GDC	-	General Design Criteria (10CFR50 Appendix A)
HELB	-	High Energy Line Break
HMS	-	Hydrogen Mitigation System
HRCS	-	Hydrogen Recombiner System
IEEE	-	Institute of Electrical and Electronics Engineers
LOCA	-	Loss of Coolant Accident
LOOP	-	Loss of Offsite Power
MELB	-	Moderate Energy Line Break
MFLB	-	Main Feedwater Line Break
MSL	-	Main Steam Line
MSLR	-	Main Steam Line Rupture
NPSH	-	Net Positive Suction Head
NRC	-	Nuclear Regulatory Commission
NSSS	-	Nuclear Steam Supply System
OBE	-	Operating Basis Earthquake
PMF	-	Probable Maximum Flood
PMP	-	Probable Maximum Precipitation
PORV	-	Power Operated Relief Valve
PTS	-	Pressurized Thermal Shock

PDMS - POWER DISTRIBUTION SYSTEM

An improperly positioned fuel assembly will generate a neutron flux and coolant temperature rise that will be inconsistent with that generated from a properly loaded fuel assembly. ~~Movable flux monitors are~~ Incore Flux Mapping or Power Distribution Monitoring System (PDMS) is available to detect such improperly loaded assemblies. As a back-up, ~~to the flux monitors,~~ thermocouples are located at the outlet of about one third of the fuel assemblies in the core.

4.37.1.3 Summary

The improper fuel assembly loading event is defined as the inadvertent loading of one or more fuel assemblies into improper positions, loading a fuel rod during manufacture with one or more pellets of the wrong enrichment, or loading of a full fuel assembly during manufacture with pellets of the wrong enrichment.

The major hazards/challenges posed by the improper fuel assembly loading event are damage to either the fuel or fuel cladding. The current analysis of the event shows that the safety limits for these hazards/challenges are met (see Sections 4.37.6 and 4.37.7).

4.37.2 EVENT CATEGORY

The improper fuel assembly loading event is classified as an ANS Standard N18.2-1973 Condition III event, or infrequent incident (Reference 4.37.9.5). Condition III occurrences include incidents, any one of which may occur during the lifetime of a particular plant. Design requirements for Condition III events are:

- Condition III incidents shall not cause more than a small fraction of the fuel elements in the reactor to be damaged, although sufficient fuel damage might occur to preclude resumption of operation for a considerable outage time.

- The release of radioactive material due to Condition III incidents may exceed guidelines of 10 CFR part 20, " Standards for Protection Against Radiation," but shall not be sufficient to interrupt or restrict public use of those areas beyond the exclusion radius.

- A Condition III incident shall not, by itself, generate a Condition IV fault or result in a consequential loss of function of the reactor coolant system or reactor containment barriers.

4.37.3 INITIATING EVENT ASSUMPTIONS

4.37.3.1 Modes of Operation

As part of the required startup testing ~~(Mode 2)~~, ~~the incore detector system~~ incore flux mapping or PDMS is used to detect misloaded fuel before operation at full power ~~(Mode 1)~~ (Reference 4.37.9.6). Therefore, Mode ~~2~~ 1 is the mode in which the event is postulated to occur.

4.37.3.2 Plant Operating Conditions

The following plant operating conditions are assumed for the event:

- The plant shall be operating in Mode ~~2~~ 1 when ~~Moveable Flux Mapping is performed.~~ incore flux mapping or PDMS is used.
- All other plant systems shall be assumed to be within the limits defined by the Unit Technical Specification.

Refer to Section 3.3.2 for a further explanation of plant operating conditions criteria listed above.

4.37.3.3 Mechanisms of Event Initiation

Although errors in either the manufacturing of fuel rods and/or fuel assemblies or in the positioning of a fuel assembly within the core are the initiating event, the origin of the IFAL shall not be explicitly defined (i.e., it occurs deterministically). No actual or potential failure mechanism is assumed to occur.

4.37.4 CONCURRENT EVENTS OR CONDITIONS

- The event shall be evaluated for onsite electric power system operation (assuming offsite power is not available) and for offsite electric power system operation (assuming onsite power is not available).

- Another DBE shall not be postulated to occur simultaneously with the event.

- A seismic event shall not be postulated in addition to the improper fuel assembly loading incident. However, for application of Seismic Category I criteria to equipment see Section 4.37.5.5.

Departure from nucleate boiling will not occur on the limiting fuel rod during normal operation and operational transients and any transient conditions arising from faults of moderate frequency (Condition I and II events) with a 95 percent probability at a 95 percent confidence level. Historically this has been conservatively met by limiting the minimum departure from nucleate boiling ratio (DNBR) to 1.30. For this event for WBN a minimum DNBR of 1.30 shall be used. For an ANS Condition III event such as the improperly loaded fuel, damage to a small fraction of fuel elements is permitted.

The current conservative analysis shows that all but one of the analyzed misloading events would be detected by the results of flux mapping in mode 2 prior to ascension to power in mode 1. The excepted case is an interchange of region 1 and 2 assemblies near the center of the core. This misloading event does not result in unacceptable consequences (Reference 4.37.9.8).

4.37.8 SAFETY FUNCTION/MITIGATION SCHEME

Attached is a tabulation of safety functions versus mitigation system list providing an evaluation of the means by which safety-related systems mitigate an improper fuel assembly loading event. The standard set and subset of safety functions utilized in this and all design basis events are included in the tabulation regardless of whether that particular safety function is directly challenged by the event. The Emergency Operation Instructions should be reviewed to determine the exact steps in implementing the mitigation scheme whereas the purpose of the tabulation and following summary are to simply identify which and how the safety systems accomplish the mitigation and attainment/maintenance of a safe shutdown.

As part of the required startup testing, the ~~incore detector~~ Incore Instrumentation System ~~system~~ is used to detect misloaded fuel before operating at full power. The NRC has concluded that an improperly loaded fuel assembly that could cause a significant safety problem would be detected by the operator with the instrumentation provided (Reference 4.37.9.6).

IMPROPER FUEL LOADING ASSEMBLY LOADING
BASIC MODES: POWER OPERATION (1), STARTUP MODE (2), AND HOT STANDBY (3)
ALTERNATE MODES: HOT SHUTDOWN MODE (4), AND COLD SHUTDOWN MODE(5), AND REFUELING MODE(6)

SAFETY FUNCTION	DESCRIPTION OF THE SAFETY FUNCTION	MITIGATING SYSTEM LIST	COMMENT/FUNCTION
8. TRANSIENT DETECTION/MITIGATION/TERMINATION	THE ABILITY TO PROVIDE EVENT SPECIFIC SAFETY FUNCTIONS NECESSARY TO DETECT, MITIGATE, AND TERMINATE THE EVENT NOT SPECIFICALLY ADDRESSED IN THE OTHER EIGHT SAFETY FUNCTIONS	POST ACCIDENT MONITORING SYSTEM FOR A LISTING OF PAMS EQUIPMENT SEE WB-DC-30-7	MONITORING EVENT PROGRESS & MITIGATING SYSTEM'S PERFORMANCE, AND DETECTING THE NEED FOR OPERATOR ACTION
		INCORE ~~FLUX~~ INSTRUMENTATION SYSTEM (94) ***	PROVIDES DETECTION OF IMPROPER FUEL LOADING
9. AUXILIARY SYSTEM SUPPORT - EQUIPMENT COOLING - PROVIDE MOTIVE POWER o ELECTRICAL o AIR - HABITABILITY - OTHER	THE ABILITY TO PROVIDE THE SUPPORT FUNCTIONS REQUIRED BY THE SYSTEMS MITIGATING THE EVENT AND ACCOMPLISHING SAFE SHUTDOWN	MAIN STEAM SYSTEM (1)	SUPPLIES STEAM TO AUX FEEDWATER PUMP TURBINE
		AUXILIARY BUILDING - HEATING VENTILATION AND COOLING SYS (30 AB)	MAINTAINS AN ACCEPTABLE ENVIRONMENT FOR SAFETY RELATED EQUIPMENT IN THE AUXILIARY BLDG
		ADDITIONAL DIESEL GENERATOR BLDG VENTILATION SYS (30 ADG)	MAINTAINS AN ACCEPTABLE ENVIRONMENT FOR THE DIESEL GENERATOR SYS AND AUXILIARY EQUIPMENT (ONLY FOR INSTANCES WHEN ADDITION DIESEL IS SUBSTITUTED FOR ANOTHER)
		HEATING VENTILATION AIR AIR CONDITIONING AND AIR CLEANUP - CONTROL BLDG (30 CB)	MAINTAINS AN ACCEPTABLE ENVIRONMENT FOR THE PLANT CONTROLS AND UNINTERRUPTED OCCUPANCY FOR THE MAIN CONTROL ROOM HABITABILITY ZONE

*** This system is not required to meet the requirements of Appendix C for design classification; it does meet the requirements of Design Criteria/System Description N3-94-4003.

EDCR 52321
Page 177

EDCR 52321-A
page 178

TENNESSEE VALLEY AUTHORITY

Division of Nuclear Engineering

N
E

RIMS
QA RECORD

N/A
DESIGN CRITERIA DOCUMENT

No. WB-DC-30-7

WATTS BAR
NUCLEAR PLANT
UNIT 1 / UNIT 2

TITLE: POST ACCIDENT MONITORING INSTRUMENTATION

*Signatures on original

REVISION	R0	R21	R22	R23		
DATE:	*	1-29-2007	8-27-2008	10-12-2010		
PREPARED	*	H.Henderson	R.Pachigolla	R. Pachigolla	10-8-10	
CHECKED	----------	----------	D.C.Mather	M. A. Merten	Mat Merten	10/8/10
VERIFIED	*	J.L.Seeley	D.C.Mather	M. A. Merten	[redacted]	10/8/10
APPROVED	*	R.M.Johnson	V.L.Lotspeich	T. R. Raley	THOMAS R RALEY	10/8/10
TVA MGMT	----------	----------	S.A.Hilmes	S.A. Hilmes	STEVE HILMES per telecon	10/8/10

Regulatory Guide 1.97
Post Accident Monitoring Variables List
Appendix A Table A-1
WB-DC-30-7

VAR NUM	Variable Name	Type/Category	Redundant Channels	Range From	Range To	Range Units	EQ	SQ	QA	Power Supply	Notes
1	Auxiliary Feedwater Flow	A1 D2	P1 P2 2 Channels Per Loop	0	700	GPM	YES	YES	YES	1E	(See Note 1)
2	Containment Lower Compartment Atmosphere Temperature	A1 D2	P1 P2 2 Channels	0	350	Deg F	YES	YES	YES	1E	Deviation #8
3	Containment Pressure (Narrow Range)	A1 B1 C1 D2	4 Channels (See Note 14)	-2	15	PSIG	YES	YES	YES	1E	Deviation #24 Note 8
4	Containment Radiation	A1 C3 E1	P1 P2 2 Upper 2 Lower	1	1.0E7	R/hr	YES	YES	YES	1E	Deviation #36
5	Containment Sump Level (Wide Range)	A1 B1 C1 D2	P1 P2	0	200	Inches	YES	YES	YES	1E	Deviation #32
6	Core Exit Temperature	A1 B1 C1 D2	P1 P2 8 PAM 1 8 PAM 2	200	2300	Deg F	YES	YES	YES	1E	Minimum of 16 Operable Thermocouples, 4 From Each Quadrant (See Note 1,8,&10) Deviation #30 & #37

(UNIT 1 ONLY)

EDCR 52321-A
page 179

APPENDIX C

TABLE C

REG GUIDE 1.97 R2 DEVIATION AND
JUSTIFICATION FOR DEVIATIONS

DEVIATION 29

VARIABLE 97a

Reactor Coolant Chloride Concentration

DEVIATION FROM RG 1.97 GUIDANCE

RG 1.97, Revision 2, recommends a range of 0 to 20 ppm for reactor coolant chloride concentration. WBN recommends a range of 1 to 20 ppm.

JUSTIFICATION

The WBN recommended range of 1 to 20 ppm accurately represents TVA's commitment to the NRC.

DEVIATION 30 (UNIT 1 ONLY)

VARIABLE 6

DEVIATION FROM RG 1.97 GUIDANCE

The two channels/trains of the core thermocouple system at the bundling at the common reactor vessel refueling cavity wall penetration do not meet the separation requirement of RG 1.97.

JUSTIFICATION

The design and the installation of the mineral insulated cables used for the core thermocouples within the reactor cavity was completed prior to upgrading the system to satisfy RG 1.97 requirements. The design within the refueling cavity is acceptable because:

1. Only a small self-generated signal exists in the cabling from the thermocouples to the Incore Instrument Room and, therefore, no chance exists for a postulated propagating fault.

2. Due to the interference provided by the rod control mechanisms and rod position indicator stack, no likelihood exists for rendering all thermocouples inoperable.

APPENDIX C

TABLE C
REG GUIDE 1.97 R2 DEVIATION AND
JUSTIFICATION FOR DEVIATIONS

DEVIATION 37

VARIABLE 6

Core Exit Temperature

DEVIATION FROM RG 1.97 R2 GUIDANCE

This Type A, Category 1 variable has been provided with a minimum of two independent channels (PAM 1 and PAM 2) for monitoring core exit temperature. Where failure of a channel would present ambiguous or confusing information to the operator, preventing the operator from taking action or misleading the operator, RG 1.97 recommends that an additional redundant (PAM 3) channel be provided. One channel of the WBN core exit temperature indication is subject to direct failure as a result of a specific pipe break jet impingement and/or pipe whip impact on the cable/conduit routed near the safety injection (SI) accumulator cold leg injection line in Loop 1. The WBN design does not include a third redundant channel for this variable.

JUSTIFICATION

The core exit thermocouples were added to the plant design to provide direct indication of degrading core cooling conditions following transient events similar to that experienced at Three Mile Island (TMI). These events typically develop gradually over time and involve a great deal of operator action and control. The core exit temperature indication was intended to prevent erroneous operator termination of emergency core cooling system (ECCS) flow to the reactor coolant system (RCS) after small breaks or transients that do not rapidly depressurize the RCS.

The challenge to the channel redundancy in this case is due to a specific primary loop pipe break at the cold leg injection check valve. The injection line is 10-inches diameter, schedule 140 pipe and the postulated break is a full guillotine rupture which results in a blowdown flow area from the primary loop side of the break of 60 in^2 or 0.4176 ft^2. This break is included in the loss-of-coolant-accident (LOCA) break size spectrum and is considered an intermediate size break. FSAR Chapter 15 analyses show that breaks in this range rapidly depressurize the primary system, causing automatic ECCS response which refloods the core and terminates the core heatup transient. However, should such a break occur, the affected channel is expected to fail open and not give erroneous indication that could confuse the operators.

It is the WBN position that the RG 1.97 R2 indication provided by reactor vessel level, RCS pressure, RCS temperatures T_{hot} and T_{cold}, and containment pressure and temperature will enable the operators to compensate for a loss of one channel of CET due to this specific pipe break plus a single failure of the redundant channel. The operators will be able to correctly assess the accident scenario and determine the effectiveness of postaccident core cooling system response during performance of the Emergency Operating Procedures.