Bringing service to life

serco

Compression Testing of Cork

Report to Croft Associates Ltd

Your Reference:	PO5607TC
Our Reference:	SERCO/TAS/002762/01 Issue 1
Date:	October 2008

~~SERCO IN CONFIDENCE~~

serco

Title	Compression Testing of Cork
Customer	Croft Associates Ltd
Customer reference	PO5607TC
Confidentiality, copyright and reproduction	Serco in Confidence This document has been prepared by Serco in connection with a contract to supply goods and/or services and is submitted only on the basis of strict confidentiality. The contents must not be disclosed to third parties other than in accordance with the terms of the contract.
Our Reference	SERCO/TAS/002762/01 Issue 1

Technical & Assurance Services
Serco
Walton House
Birchwood Park
Risley
Warrington
Cheshire
WA3 6GA
Telephone 01925 25 4614
Facsimile 01925 25 2196

www.serco.com

Technical & Assurance Services is part of Serco Defence, Science and Technology, a division of Serco Ltd.

In the areas where this work was performed, Technical & Assurance Services is certified to ISO 9001 (2000) and ISO 14001.

	Name	Signature	Date
Author(s)	Paul Hutchinson	P Hutchinson	23/10/08
Reviewed by	George Melvin		23/10/08
Approved by	George Melvin		23/10/08

serco

Executive Summary

This report details the results of a series of compression tests on cork, which have been conducted by Serco Technical and Assurance Services (TAS) on behalf of Croft Associates Ltd. The experimental programme was carried out as specified in Croft document CTN 2008/02 Issue A[1] and in accordance with the procedures described in test standard BS ISO 844:2001[2].

The tests were performed at temperatures of 20, 100, and -29°C using samples of material provided by Croft Associates. These samples were manufactured from a material conforming to specification Amorim 8113i, as per inspection report Croft GRC 1550[3].

The work was carried out within the Serco Materials and Component Research Laboratory during August 2008 under contract number PO5607TC.

serco

Contents

1 Introduction 6

2 Quality Assurance and Control 6

3 Test Details. 6

3.1 Test Specimens 6
3.2 Test Machine 7
3.3 Instrumentation 7
3.4 Test Procedure 7

4 Data Analysis 8

4.1 Applied Stress and Compressive strength 8
4.2 Relative Deformation 8
4.3 Compressive Modulus of Elasticity 8

5 Results and Discussion

5.1 Test Temperature of 20°C 9
5.2 Test Temperature of 100°C 9
5.3 Test Temperature of -29°C 9

6 Conclusions 10

7 References 10

8 Distribution 10

Figures 1-7 11-17

1 - Design of Pot used to Provide Radial Constraint during Compression Tests

2 - Photograph of Test Assembly in Test Machine

3 - Force-Displacement Curve: Illustration of terms used for analysis of data in accordance with BS ISO 844:2001 (20 and 100°C)

4 - Illustration of Slope of Curve used for Modulus Calculation at -29°C (Specimen GRC 1550-1)

5 - Stress vs. Relative Deformation plot for Cork Samples Tested at 20°C

6 - Stress vs. Relative Deformation plot for Cork Samples Tested at 100°C

7 - Stress vs. Relative Deformation plot for Cork Samples Tested at -29°C

serco

Appendix 1
Test Certificate MCRL/6481/C1 Compression Testing of Cork at 20°C

Appendix 2
Test Certificate MCRL/6481/C2 Compression Testing of Cork at 100°C

Appendix 3
Test Certificate MCRL/6481/C3 Compression Testing of Cork at -29°C

1 Introduction

Croft Associates Ltd. has a requirement to determine the behaviour of rigid cellular material (cork) when it is subjected to a compressive force. In order to provide the necessary data, Serco TAS conducted a series of compression tests on specimens prepared from a material conforming to specification Amorim 8113i, as per inspection report Croft GRC 1550. The experimental programme was carried out as specified in Croft Associates document CTN 2008/02 Issue A and generally in accordance with the procedures described in Test Standard BS ISO 844:2001. Five samples were tested at each of the specified temperatures; 20, 100, and -29°C.

Croft Associates Ltd provided the samples. These comprised cylindrical coupons of material, nominally 76mm in diameter and 45mm in length. The samples were conditioned at the required temperature prior to testing. They were then placed in a cylindrical pot, to provide radial constraint, and crushed axially at a controlled rate up to a load of 50kN. Measurements of applied force and deformation were recorded continuously during the test.

The data were analysed to provide values of applied stress and relative deformation (strain) and the compressive modulus of elasticity was evaluated. The results are presented in the form of test certificates, and are included in the Appendices of this report.

2 Quality Assurance and Control

Serco TAS Quality Management arrangements have been assessed by Lloyds Register Quality Assurance (LRQA) against the requirements BS EN ISO 9001:2000 and certificate number LRQ 0964988 has been issued.

The overall scope of testing is defined in Croft Associates Test Specification CTN 2008/02 Issue A. The tests were conducted generally in accordance with British Standard BS ISO 844:2001 with the following permitted deviations:

i) The test specimens were radially constrained.
ii) The humidity of the environment during conditioning and testing of the samples was not controlled or measured.
iii) Testing was terminated at a maximum load of 50kN.
iv) Tests were conducted at temperatures other than 20°C.

Tests were performed in accordance with a Serco TAS Local Working Instruction[4] prepared specifically for compression testing of rigid plastic materials and cork. This was prepared for a previous experimental programme conducted on behalf of Croft Associates[5]. This has been entered in the Serco TAS Quality Assurance register and has been approved by Croft Associates Ltd.

3 Test Details.

Details of the specimens, the equipment used and testing procedure are described below.

3.1 Test Specimens

A total of 20 cork specimens were prepared by Croft Associates Ltd. and were identified as samples GRC 1550/1 to GRC 1550/20. These were delivered to Serco TAS in July 2008 and registered within the laboratory QA system. The specimens were cylindrical and were nominally 76 mm in diameter and 45mm in length.

Prior to testing, the specimens were conditioned by storing them for a minimum period of 6 hours at the required test temperature. The dimensions of individual samples were recorded both at 20°C and at temperature immediately prior to installation into the testing machine.

3.2 Test Machine

The tests were carried out using a conventional servo-electric testing machine with a maximum load capacity of 250kN although the tests were terminated at a load of 50kN for consistency with data generated during a previous programme[5]. The machine was equipped with a fan-assisted environmental enclosure allowing tests to be conducted at temperatures from -170°C to 350°C to an accuracy of ± 2°C.

Radial constraint was a requirement of the test specification. This was achieved by placing the specimens into a cylindrical pot and applying the compressive force through a piston inserted into the top. The design of the pot included a removable base to simplify the extraction of the specimen on completion of the test. A detailed drawing of the containment is shown in Figure 1.

In order to ensure good axial alignment of the specimen during the test, the pot was supported on a platen incorporating a self-aligning spherical bearing.

A photograph illustrating the key elements of the complete testing arrangement is shown in Figure 2.

3.3 Instrumentation

The applied force was measured using the integral test machine load cell, which had been calibrated by a UKAS accredited authority to ISO 7500-1:1999 and ascribed a grade 1.0 classification.

The displacement of the test machine crosshead, and hence the deformation of the sample, was measured using a linear encoder, the calibration of which was checked using a traceable reference and found to be accurate to within +/- 0.15% over the range used during the test (40mm).

Data from the load and displacement instrumentation were recorded using a high-resolution PC based data acquisition system.

The temperature of the samples during conditioning and testing was checked using a hand-held digital thermometer with either two type 'T' thermocouples (20° and -29°C) or two type 'K' thermocouples (100°C). One thermocouple was attached to the outer surface of the containment pot, the other located in a hole drilled into the centre of one of the 'spare' specimens, placed inside the environmental enclosure.

3.4 Test Procedure

The specimens were conditioned in batches of five at the required temperature for a minimum period of 6 hours prior to testing. Meanwhile, the pot was placed into the environmental enclosure and allowed to stabilise at the same temperature as the specimens. After conditioning, the specimen to be tested was measured, placed into the pot, and the complete assembly was then installed into the test machine. The temperature was again allowed to stabilise for a minimum period of 1 hour before testing was carried out.

The crushing force was applied by displacing the piston at a controlled rate of approximately 4.5 mm/minute. This continued until a load of 50kN was attained. The load and displacement data were recorded continuously during the test at a rate of 20 readings/second. On completion

the test specimen was removed and the recorded data were analysed as described in Section 4.

4 Data Analysis

The computer records were analysed to provide the required data using the procedure described below. At all test temperatures values of displacement were calculated from the "zero-deformation point" as specified in BS ISO 844.

The terms used in the calculation of these results are illustrated in Figure 3.

4.1 Applied Stress and Compressive strength

The applied stress (σ) in MPa was calculated as follows:

$$\sigma = \frac{F}{A_0}$$

where:

F = Applied force (N)
A_0 =Initial cross-sectional area of the test specimen (mm^2)

Note that a value for compressive strength was not applicable as crushing did not occur hence no peak load was determined.

4.2 Relative Deformation

The relative deformation (ε) was calculated from:

$$\varepsilon = 100 \times \frac{x}{h_0}$$

where:

x = displacement (mm) from the "zero-deformation point"
h_0 = initial thickness of the specimen (mm)

The compressive stress has been calculated at a range of relative deformations from 1% to 65%. These results are tabulated in the test certificates provided in the Appendices.

4.3 Compressive Modulus of Elasticity

The Compressive Modulus of Elasticity (E) was calculated for the linear portion of the force-displacement curve (elastic zone) from:

$$E = \frac{\sigma_e}{\varepsilon_e} \qquad \text{(MPa)}$$

where:

$$\sigma_e = \frac{F_e}{A_0}$$

σ_e = Stress at end of elastic region (MPa)
F_e = force at the end of the elastic region (N).
A_0 = Initial cross-sectional area of the test specimen (mm^2).

and

$$\varepsilon_e = \frac{x_e}{h_0}$$

where:

ε_e = strain at force F_e
X_e = displacement (mm) at force F_e measured from the "zero-deformation point"
h_0 = initial thickness of the specimen (mm)

Plots of the relative deformation as a function of applied stress have been produced for each test.

5 Results and Discussion

Test certificates were compiled containing details of each specimen tested, the results of the analyses described in Section 4, and plots of stress vs. relative deformation. These are presented in Appendices 1 to 3 for temperatures of 20, 100 and -29°C respectively.

5.1 Test Temperature of 20°C

At a test temperature of 20°C, the curve generally showed a reduction in slope at approximately 1% relative deformation. There was then a gradual increase in stress as the material was compacted, with the slope of the curve becoming increasingly steep after 40% relative deformation. The final load of 50kN was reached at a relative deformation of approximately 70%.

5.2 Test Temperature of 100°C

The results from the tests at 100°C showed a gradual increase in stress with the slope of the curve increasing significantly at about 45% relative deformation. The final load of 50kN was reached at a relative deformation of approximately 74%.

5.3 Test Temperature of -29°C

At a test temperature of -29°C the curve showed a reduction in slope at approximately 5% relative deformation. The stress then increased gradually, with the increase in slope occurring at approximately 35% relative deformation. The final load of 50kN was reached at approximately 60-65% relative deformation.

The tests at -29°C exhibited significantly more experimental scatter than the tests at 20°C and 100°C.

At -29°C all test traces exhibited a very steep gradient up to an applied load of approximately 1000N. Beyond 1000N the gradient of each curve became much shallower. It is this second part of the curve that was used in the calculation of the compressive modulus of elasticity. This is illustrated graphically in Figure 4.

The average results are summarised in the table below and the stress versus relative deformation data from all the specimens tested at each temperature are plotted for comparison in Figures 5-7.

Test Temperature (°C)	Compressive Modulus of Elasticity E, calculated from Initial Deformation (MPa)	Compressive Stress at 10% relative deformation (MPa)
20	15.0	0.57
100	4.6	0.34
-29	23.4	1.60

Table 1 – Average Compressive Modulus of Elasticity and Compressive Strength at 10% Relative Deformation for each Test Temperature

6 Conclusions

Compressive tests have been conducted at temperatures of 20, 100 and -29°C on samples manufactured from cork. Plots of applied stress versus strain have been produced and the relative moduli calculated.

7 References

1 Low Strain Rate Test Specification for Amorim Cork. - Croft Report CTN 2008/02 Issue A. June 2008.

2 BS ISO 844:2001. Cellular plastics - Compression Test for Rigid Materials - Specification

3 Specification for Manufacture of Cork Blocks - Croft Report GRC 1550 for Cork Amorim 8113i

4 SA/QA/LWI/SUS/212. Compression Testing of Rigid Plastic Materials and Cork.

5 SA/RJCB/RD04970/R002 Issue 1: Compression testing of Cork: July 2002

8 Distribution

Name	Organisation	Copies
Dr. R. Vaughan	Croft Associates Ltd	1
Mr. P. Hutchinson	Serco TAS	1
Mr. G. Melvin	Serco TAS	1

serco

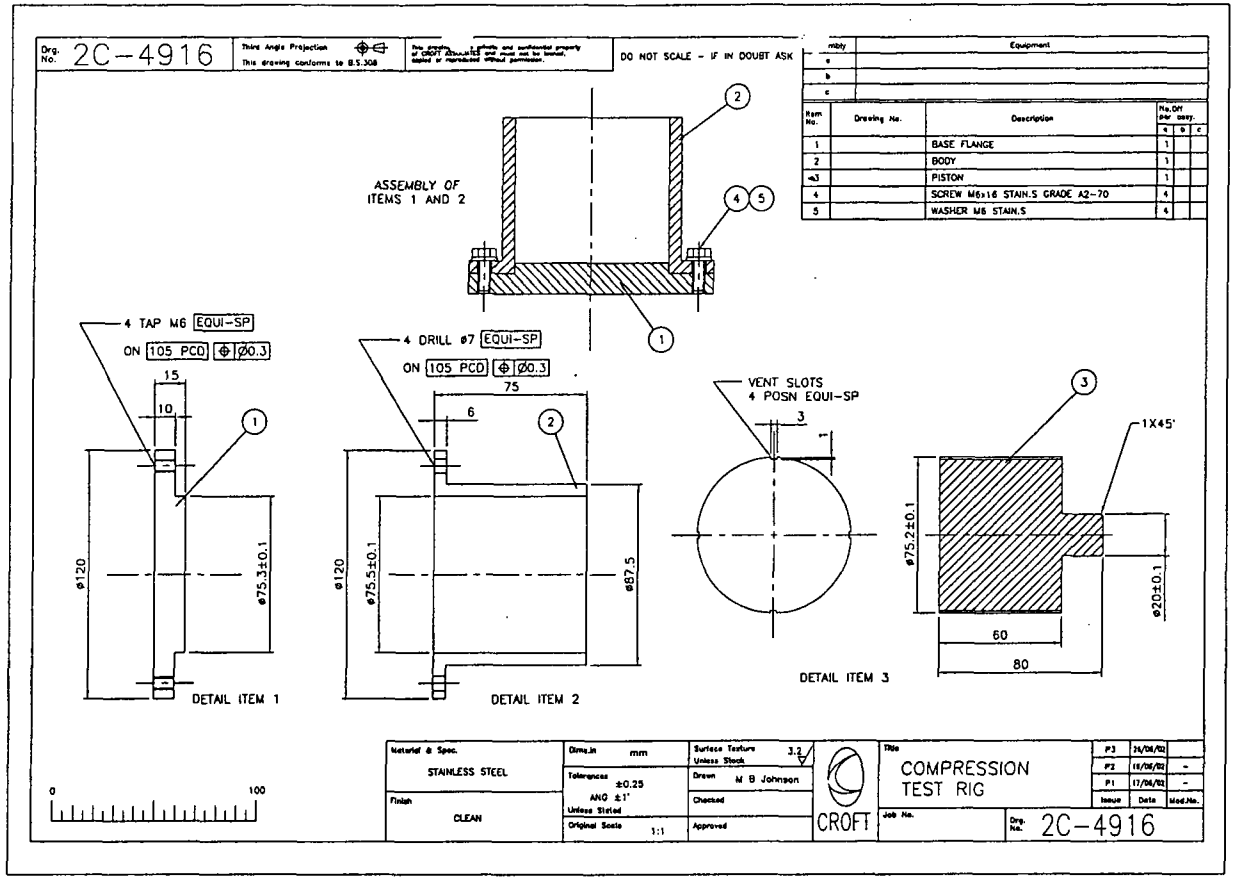

Figure 1 – Design of Pot used to Provide Radial Constraint during Compression Tests

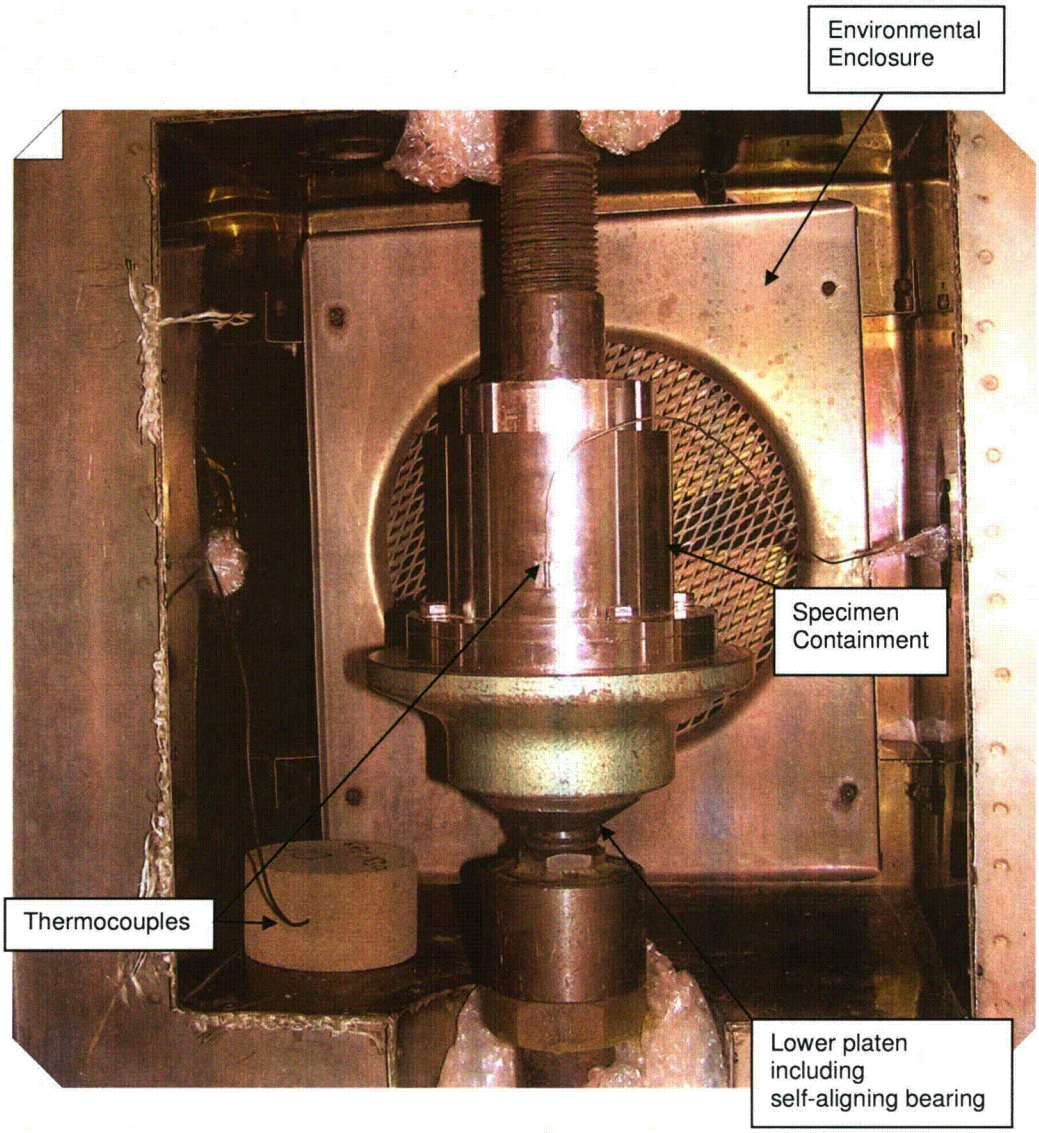

Figure 2 - Photograph of Test Assembly in Test Machine

serco

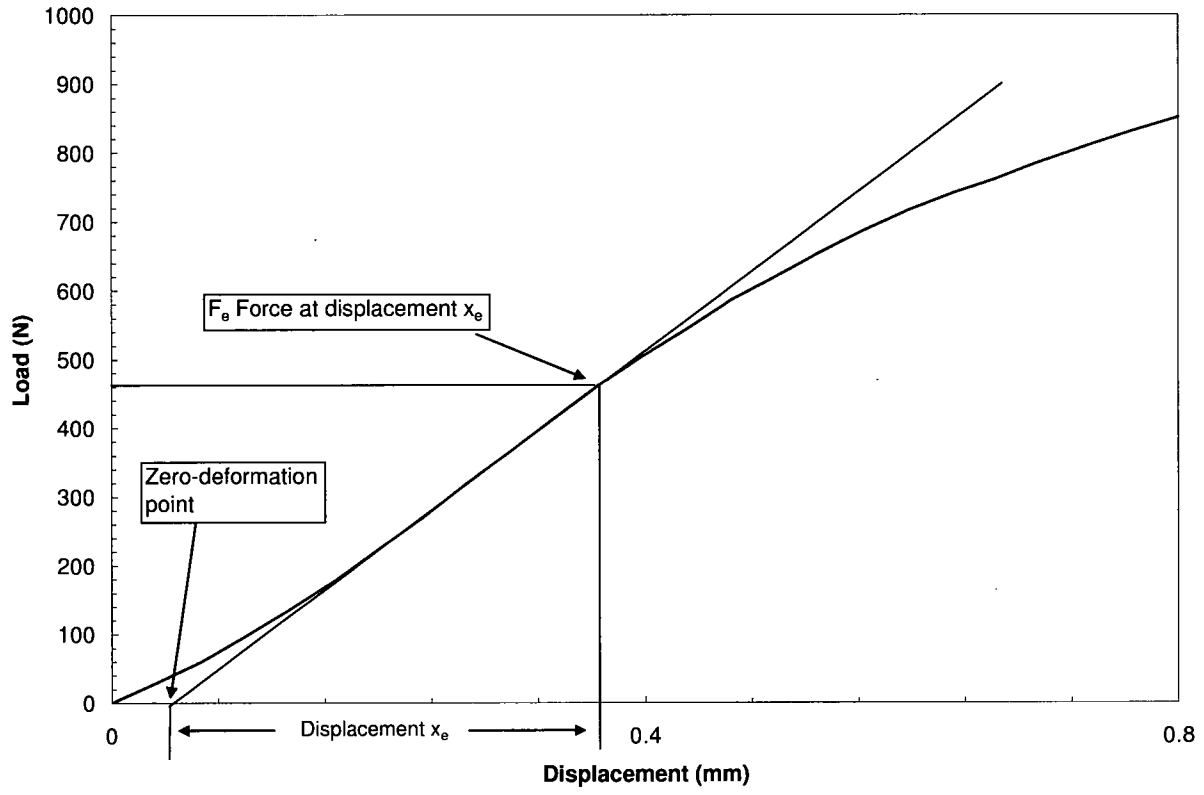

Figure 3 – Force-Displacement Curve: Illustration of terms used for analysis of data in accordance with BS ISO 844:2001

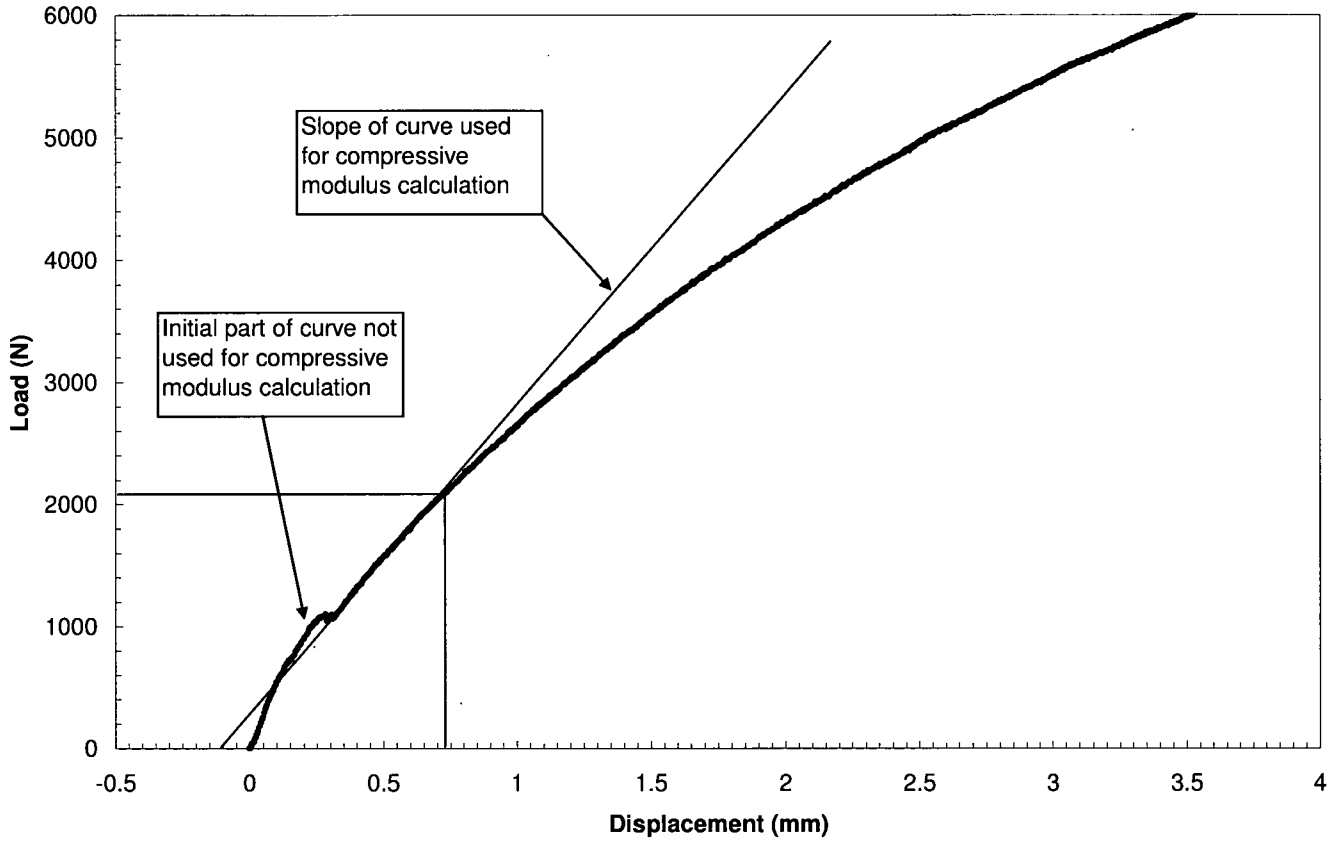

Figure 4 – Illustration of Slope of Curve used for Modulus Calculation at -29°C (Specimen GRC 1550-1)

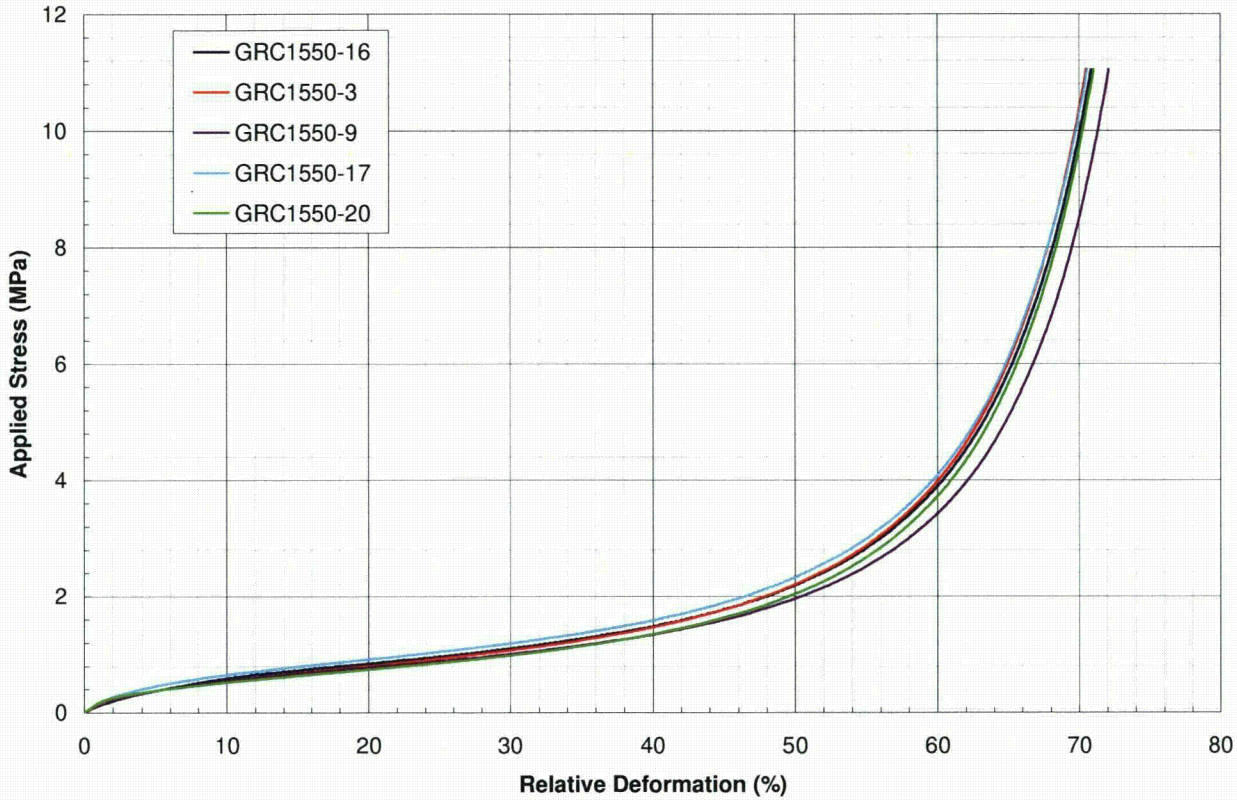

Figure 5 – Stress vs. Relative Deformation plot for Cork Samples Tested at 20℃

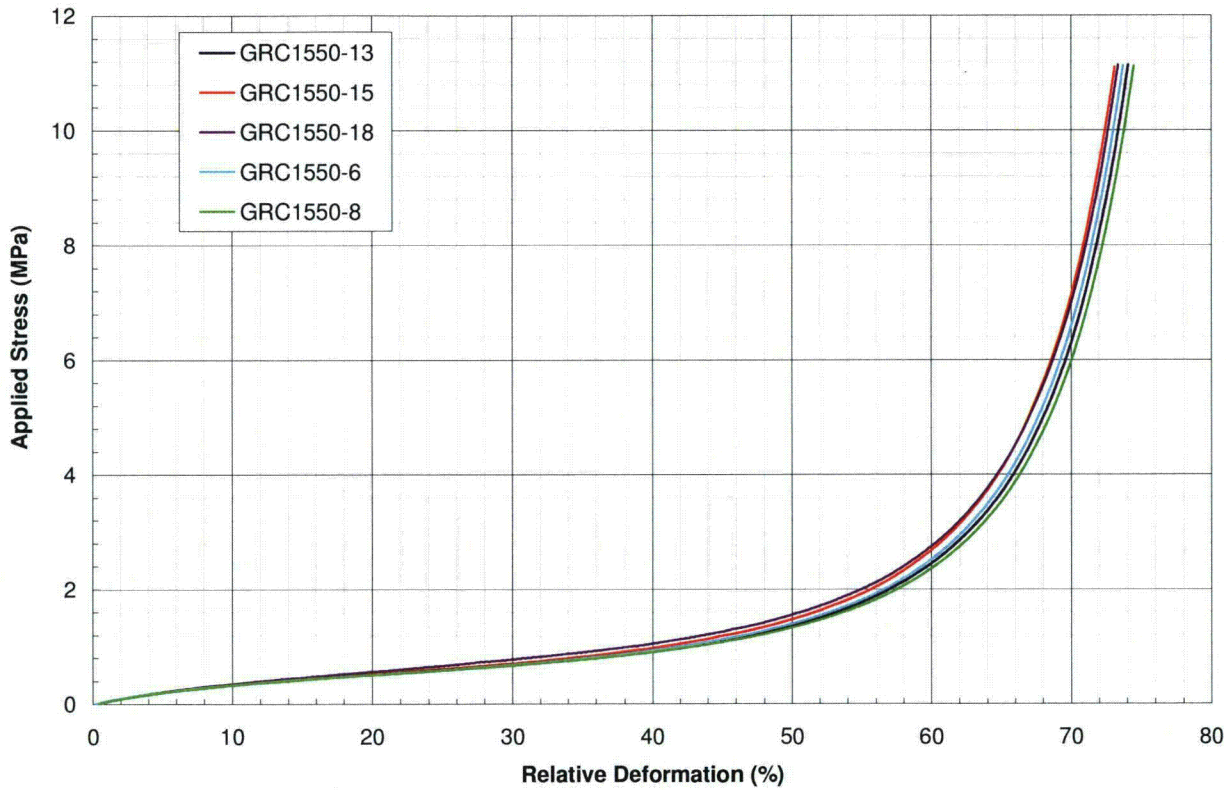

Figure 6 – Stress vs. Relative Deformation plot for Cork Samples Tested at 100℃

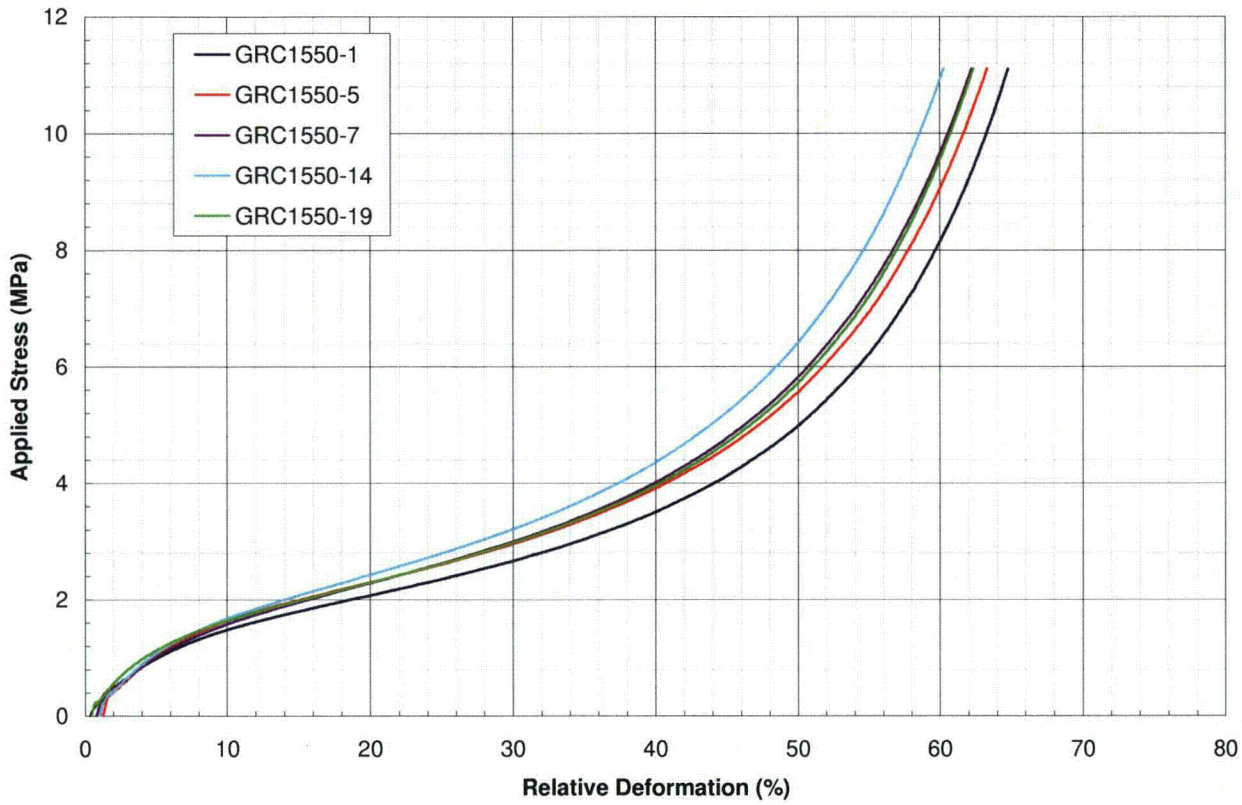

Figure 7 – Stress vs. Relative Deformation plot for Cork Samples Tested at -29°C

serco

Appendices

Contents

Appendix 1	Test Certificate MCRL/6481/C1 Compression Testing of Cork at 20°C
Appendix 2	Test Certificate MCRL/6481/C2 Compression Testing of Cork at 100°C
Appendix 3	Test Certificate MCRL/6481/C3 Compression Testing of Cork at -29°C

serco

Appendix I

Test Certificate MCRL/6481/C1
Compression Testing of Cork at 20°C

serco

Appendix 2

Test Certificate MCRL/6481/C2
Compression Testing of Cork at 100°C

VECTRA

GROUP LIMITED

Stress Analysis of Safkeg LS 3979A Containment Vessel

Prepared for :	Croft Associates Ltd F4 Culham Science Centre, Abingdon, Oxfordshire, OX14 3DB
Prepared by :	Vectra Group Limited Europa House 310 Europa Boulevard Gemini Business Park Westbrook Warrington WA5 7YQ
Report No :	925-3272/R1
Revision :	4
Date :	1/07/09

The copyright on this document is the property of Vectra Group Ltd. This document is supplied by Vectra Group Ltd on the express terms that it is to be treated as confidential and that it may not be copied, used or disclosed to others, for any purpose except as authorised in writing by Vectra Group Ltd.
© 2008

Report Approval and Revision Record

Project	Stress Analysis of Safkeg LS Containment Vessel
Document Title	Stress Analysis of Safkeg LS Containment Vessel
Client	Croft Associates Ltd
Document Number	925-3272/R1
Job Number	925-3272

Rev	Date	Issue	Prepared	Reviewed	Approved
0	5/11/08	Issued for customer comment	GD Jones	AE Bond	AE Bond
1	12/11/08	Change to material allowable stress	GD Jones	AE Bond	AE Bond
2	1/05/09	Change to acceleration values used for NCT cases	GD Jones	AE Bond	AE Bond
3	12/06/09	Change to drawing issue no.	GD Jones	AE Bond	AE Bond
4	1/07/09	Incorporates customers comments	GD Jones	AE Bond	AE Bond

Table of Contents

	Cover Sheet	1
	Report Approval and Revision Record	2
	Table of Contents	3
	Summary	4
1.0	**Introduction**	**6**
2.0	**Structural Evaluation**	**7**
2.1	Description of Finite Element Model	7
2.2	Design Criteria	7
2.2.1	Load Combinations	7
2.2.2	Allowable Stresses	10
2.2.3	Buckling	11
2.2.4	Fatigue	13
3.0	**Materials**	**14**
3.1	Material Properties and Specifications	14
4.0	**Normal Conditions of Transport**	**16**
4.1	NCT 1: Hot Environment	16
4.1.1	Summary of Pressures and Temperatures	16
4.1.2	Stress Calculations	16
4.1.3	Comparison with Allowable Stresses	16
4.2	NCT 2: Cold Environment	17
4.2.1	Summary of Pressures and Temperatures	17
4.2.2	Stress Calculations	18
4.2.3	Comparison with Allowable Stresses	18
4.3	NCT 3: Reduced External Pressure	19
4.3.1	Summary of Pressures and Temperatures	19
4.3.2	Stress Calculations	19
4.3.3	Comparison with Allowable Stresses	19
4.4	NCT 4: Increased External Pressure	21
4.4.1	Summary of Pressures and Temperatures	21
4.4.2	Stress Calculations	21
4.4.3	Comparison with Allowable Stresses	21
4.5	NCT 5: Vibration (hot)	22
4.5.1	Summary of Pressures and Temperatures	22
4.5.2	Stress Calculations	22
4.5.3	Comparison with Allowable Stresses	22
4.6	NCT 6: Vibration (cold)	23
4.6.1	Summary of Pressures and Temperatures	23
4.6.2	Stress Calculations	24
4.6.3	Comparison with Allowable Stresses	24
4.7	NCT 7: Free drop on lid (hot)	25
4.7.1	Summary of Pressures and Temperatures	25
4.7.2	Stress Calculations	25
4.7.3	Comparison with Allowable Stresses	25
4.8	NCT 8: Free drop on lid (cold)	26

4.8.1 Summary of Pressures and Temperatures 26
4.8.2 Stress Calculation 26
4.8.3 Comparison with Allowable Stresses 26
4.9 NCT 9: Free drop on side (hot) 27
4.9.1 Summary of Pressures and Temperatures 27
4.9.2 Stress Calculations 27
4.9.3 Comparison with Allowable Stresses 28
4.10 NCT 10: Free drop on side (cold) 28
4.10.1 Stress Calculations 29
4.10.2 Comparison with Allowable Stresses 29
4.11 NCT 11: Free drop on corner (hot) 30
4.11.1 Summary of Pressures and Temperatures 30
4.11.2 Stress Calculations 30
4.11.3 Comparison with Allowable Stresses 30
4.12 NCT 12: Free drop on corner (cold) 31
4.12.1 Summary of Pressures and Temperatures 31
4.12.2 Stress Calculations 31
4.12.3 Comparison with Allowable Stresses 31

5.0 Hypothetical Accident Conditions 33

5.1 HAC 1: Free drop on lid (hot) 33
5.1.1 Summary of Pressures and Temperatures 33
5.1.2 Stress Calculations 33
5.1.3 Comparison with Allowable Stresses 33
5.2 HAC 2: Free drop on lid (cold) 34
5.2.1 Summary of Pressures and Temperatures 34
5.2.2 Stress Calculation 34
5.2.3 Comparison with Allowable Stresses 34
5.3 HAC 3: Free drop on side (hot) 35
5.3.1 Summary of Pressures and Temperatures 35
5.3.2 Stress Calculations 35
5.3.3 Comparison with Allowable Stresses 35
5.4 HAC 4: Free drop on side (cold) 36
5.4.1 Stress Calculation 36
5.4.2 Comparison with Allowable Stresses 36
5.5 HAC 5: Free drop on corner (hot) 37
5.5.1 Summary of Pressures and Temperatures 37
5.5.2 Stress Calculations 38
5.5.3 Comparison with Allowable Stresses 38
5.6 HAC 6: Free drop on corner (cold) 38
5.6.1 Stress Calculation 39
5.6.2 Comparison with Allowable Stresses 39

6.0 Conclusions 40

7.0 References 41

Appendix A –Buckling Calculation **74**

Executive Summary

This report describes the stress analysis of the Safkeg LS Package Design No. 3979A Containment Vessel when subjected to loads due to Normal Conditions of Transport (NCT) and Hypothetical Accident Conditions (HAC). This report describes the finite element model, the assumptions made, the results, and the assessment of the stresses against the allowable values. The Safkeg LS keg was not included in this analysis as that has been/9 assessed by testing.

The analyses have shown that the containment vessel satisfies the requirements of US NRC Regulatory Guide 7.6 in that the margin of safety is satisfactory for all load combinations.

1.0 Introduction

This report describes the stress analysis of the Safkeg LS Package Design No. 3979A Containment Vessel when subjected to loads due to Normal Conditions of Transport (NCT) and Hypothetical Accident Conditions (HAC). This report describes the finite element model, the assumptions made, the results, and the assessment of the stresses against the allowable values. The Safkeg LS keg was not included in this analysis as that has been assessed by testing.

2.0 Structural Evaluation

2.1 Description of Finite Element Model

Figure 1 shows the finite element model of the containment vessel (CV). The model was generated using drawings provided by Croft [Figures 2-5, Ref. 1-4]. A half-symmetry model was used as both the geometry and the load cases were all symmetric about a vertical plane through the centre of the vessel.

First-order brick elements were used throughout the model. In thin sections of the vessel, at least 4 elements through the thickness were used to capture the stress distribution. Sliding contact was defined between all the parts with a friction coefficient of 0.1. The bolts were tied to the CV body along the threaded length but the bolt heads were free to slide. A pre-load of 8.12 kN was applied to the bolts at the start of the analyses prior to any other loads being imposed. This corresponds to an applied torque of 10 N m as specified on the drawing.

The model shown in Figure 1 was used for all of the non-impact cases. The model was modified for the impact load cases by including the cork impact limiter, as shown in Figure 6. The outer faces of the cork were fully constrained. A body force was applied to the vessel, which was equivalent to the anticipated deceleration in an impact. This pushed the vessel into the cork. The inclusion of the cork in the model spreads the loads on the vessel. The cork modulus is between 23.4 MPa (-29°C) and 4.6 MPa (100 °C) [5]. An initial analysis was performed using these properties, but it was found that the elements in the cork part of the model distorted severely causing the analysis to terminate prematurely. Re-analysing the impact with an artificially high modulus for the cork (1 GPa) allowed the analyses to complete successfully while adding some conservatism to the model. The same approach has been used here for the model of the Safkeg LS containment vessel. This is a conservative approach as using a higher cork modulus will concentrate the loads over a smaller area of the containment vessel compared with using the actual cork modulus.

All of the analyses were performed as static analyses, i.e. dynamic effects were not included in the impact cases.

The commercial finite element code Abaqus/Standard v6.8 [6] was used for the analyses. The models were created using Abaqus/CAE v6.8 [7].

2.2 Design Criteria

2.2.1 Load Combinations

The load combinations used for the structural evaluation of the vessel were developed in accordance with Regulatory Guide 7.8 [9]. The NCT and HAC load combinations are summarized in Table 2-1 and Table 2-2. The left-hand column of these tables gives the load case ID.

The hot initial condition has been taken as a uniform temperature of 110°C for NCT cases, and a bounding value of 150°C for HAC cases and the cold initial condition has been taken as a uniform temperature of -29°C. The hot environment load case has been taken as a uniform temperature of 110°C and the cold environment load case has been taken as a

uniform temperature of -40°C. In all cases, it was assumed that the fabrication temperature was 21°C.

The maximum internal pressure is 8 bar absolute and the minimum pressure is 0 bar absolute [8]. Gauge pressures are applied to the FE model, therefore the maximum pressure applied to the model was 7 bar gauge and the minimum pressure was -1 bar gauge.

The vibration load was 10g in a vertical direction.

The three drop attitudes for the package chosen for the free drop cases were:

1. Drop on lid.
2. Drop on side
3. Centre of gravity over top corner.

It was considered that a drop on to the base of the package would do less damage to the containment vessel than the drop on package lid case. The same applies to a drop on the bottom corner. A drop on to the package top corner may distort the CV lid and open the seals whereas this would not occur with a drop on the package bottom corner.

Bounding values were used for the accelerations applied to the model for the impact cases. A value of 300g was used for the HAC free drop cases from 9m and a value of 180g was used for the NCT free drop cases from 1.2m.

Table 2-1: Load Combinations for Normal Conditions of Transport

Load Case ID	Normal or Accident Condition	Initial Conditions								
		Ambient Temperature[1]		Insolation[3]		Decay Heat		Internal Pressure		Fabrication Stress
		38°C	-29°C	Max.	Zero	Max.	Zero	Max.	Min.	
NCT1	Hot environment[2] (38°C ambient temperature)			X		X		X		X
NCT2	Cold environment[2] (-40°C ambient temperature				X		X		X	X
NCT3	Reduced external pressure (24.5 kPa)	X		X		X		X		X
NCT4	Increased external pressure (140 kPa)		X		X		X		X	X
NCT5	Vibration (10g vertical)	X		X		X		X		X
NCT6			X		X		X		X	X
NCT7	Free drop on lid (1.2m)	X		X		X		X		X
NCT8			X		X		X		X	X
NCT9	Free drop on side (1.2m)	X		X		X		X		X
NCT10			X		X		X		X	X
NCT11	Free drop on corner (1.2m)	X		X		X		X		X
NCT12			X		X		X		X	X

Notes:

1. As the thermal analysis of the containment vessel has yet to be performed, it was assumed that the combination of an ambient temperature of 38°C plus maximum heating from insolation and decay heat would generate a uniform temperature of 110°C [8]. The "cold ambient temperature" was a uniform temperature of -29°C.
2. As the thermal analysis of the containment vessel has yet to be performed, it was assumed that the "hot environment" was a uniform temperature of 110°C and the "cold environment" was a uniform temperature of -40°C.
3. Insolation = heating due to the solar radiation.

Table 2-2: Load Combinations for Hypothetical Accident Conditions

Load case ID	Accident Condition	*Initial Conditions*								
		Ambient Temperature[1]		Insolation		Decay Heat		Internal Pressure		*Fabrication Stress*
		38°C	-29°C	Max.	Zero	Max.	Zero	Max.	Min.	
HAC1	Free drop on lid (9m)	X		X		X		X		X
HAC2			X		X		X		X	X
HAC3	Free drop on side (9m)	X		X		X		X		X
HAC4			X		X		X		X	X
HAC5	Free drop on corner (9m)	X		X		X		X		X
HAC6			X		X		X		X	X

Notes:

1. As the thermal analysis of the containment vessel has yet to be performed, it was assumed that the combination of an ambient temperature of 38°C plus maximum heating from insolation and decay heat would generate a uniform temperature of 150°C [8] and the "cold initial condition" was a uniform temperature of -29°C.
2. The puncture case has not included as only the containment vessel is assessed in this document. The punch would not penetrate the over-pack and hence would not affect the containment vessel.
3. The thermal case has not been included as this will be analysed by another contractor.

2.2.2 Allowable Stresses

The allowable stresses were taken from Regulatory Guide 7.6 [10]. These are based on the 1977 edition of the ASME Boiler and Pressure Vessel Code. This guide only gives allowable stress values for primary membrane stress, primary membrane plus primary bending stress and primary plus secondary stress for both NCT and HAC loading conditions. The allowable values for bearing stress and for the bolts have been taken from ASME Code Section III Div 3 [11] as these are not given in Reg. Guide 7.6.

Guidance for classification of stresses was taken from Table WB-3217-1 in ASME Code Section III Div 3 [11].

Stress in the non-containment parts of the vessel were not evaluated as these are not covered by Regulatory Guide 7.6 [10].

To demonstrate conformance with the allowable stress limits, it was necessary to determine the stress intensities at critical cross-sections of the containment vessel. Since the critical cross-section locations are load-condition dependent, several "stress evaluation sections" were defined to ensure that all critical locations were evaluated for every load condition. These stress evaluation sections are illustrated in Figure 7. For evaluation of conditions producing a stress distribution in the vessel that it not axisymmetric, stress evaluations were performed at multiple circumferential locations.

The section stresses at each stress evaluation location were obtained using the Abaqus "stress linearization" post-processing feature. The stress linearization provides membrane, bending, membrane plus bending, and peak stress intensities at each section. In Abaqus, the Tresca stress is equal to the stress intensity as defined in Regulatory Guide 7.6 [10].

The average bearing stress was calculated by extracting the axial force in the bolts and dividing it by the bearing area of the bolt heads. The average stress in the bolts was calculated by extracting the axial force in the bolts and dividing by the cross-sectional area of

the bolts. The average shear stress was calculated by determining the shear force between the bolt head and lid and dividing by the bolt cross-sectional area.

Using the critical sections from each load case, minimum design margins are calculated and reported for all bounding load combinations. The design margin (DM) is defined as follows:

$$DM = \left(\frac{Allowable_Value}{Calculated_Value} \right) - 1$$

Therefore a negative design margin indicates that the vessel has failed the assessment.

Table 2-3: Containment System Allowable Design Criteria

Stress Type	Allowable Stress Limits	
	NCT	HAC
Other Than Bolts		
Primary Membrane Stress Intensity (P_m)	S_m	Lesser of $2.4S_m$ and $0.7S_u$
Primary Local Membrane Stress Intensity (P_L)	S_m (2)	N/A (3)
Primary + Bending Stress Intensity (P_L or P_m+P_b)	$1.5S_m$	Lesser of $3.6S_m$ and S_u
Primary + Secondary Stress Intensity (P_L or P_m+Q)	$3.0S_m$	N/A
Average Bearing Stress	S_y	N/A
Bolts		
Average Shear Stress	$0.4S_y$	Lesser of $0.42S_u$ and $0.6S_y$
Average Stress (4)	$2S_m$	Lesser of $3S_m$ and $0.7S_u$
Maximum Stress (5)	$3S_m$	N/A (6)

Notes:

1. Stress limits applicable for components and systems evaluated using elastic system analysis.
2. ASME B&PV code gives an allowable of $1.5S_m$ for primary local membrane stress, P_L. However, Reg. Guide 7.6 does not specify an allowable for this stress, so a lower allowable value of S_m has been adopted for this assessment.
3. Evaluation of secondary stress is not required for HAC.
4. The axial stress component averaged across the bolt cross-section and neglecting stress concentrations.
5. The stress due to internal pressure and gasket seating loads (e.g. bolt torque) shall not exceed one times S_m.
6. Evaluation of maximum bolt stress not required for HAC.

2.2.3 Buckling

The containment vessel inner shell was evaluated for buckling in accordance with the requirements of ASME Code Case N-284-2 [11]. Capacity reduction factors are calculated in accordance with Section -1511 of ASME Code Case N-284-2 to account for possible reductions in the capacity of the shells due to imperfections and nonlinearity in geometry and boundary conditions. Plasticity reduction factors, which account for nonlinear material properties when the product of the classical buckling stresses and capacity reduction factors exceed the proportional limit, are calculated in accordance with Section -1610 of ASME Code Case N-284-2. The theoretical buckling stresses of the vessel inner shell under uniform stress fields are calculated in accordance with Section -1712.1.1 of ASME Code

Case N-284-2. The geometric parameters used in the buckling assessment are given in Table 2-4. The capacity reduction factors, plasticity reduction factors, and theoretical buckling stresses for the vessel inner shell are summarized in Table 2-5.

The allowable elastic and inelastic buckling stresses for NCT and HAC are calculated in accordance with the formulas given in Section -1713.1.1 and Section -1713.2.1 of ASME Code Case N-284-2. The allowable buckling stresses include factors of safety of 2.0 for NCT and 1.34 for HAC in accordance with Section -1400 of ASME Code Case N-284-2. Table 2-6 provides a summary of the vessel inner shell elastic and inelastic allowable buckling stresses for NCT and HAC. Buckling interaction ratios are calculated for the containment vessel inner shell for all NCT and HAC tests that load the shells in compression. The interaction ratios for elastic buckling and inelastic buckling are calculated using the highest values of compressive stress and shear stress from the finite element analysis solutions in accordance with the formulas given in Section -1713.1.1 and Section -1713.2.1 of ASME Code Case N-284-2.

An example of the buckling calculation is given in Appendix A. The stresses used in the calculation were taken from point C4, which is mid-way along the length of the inner shell of the containment vessel. Where one of the stress components is tensile in the FE analysis, it should be given a value of 0 MPa in the buckling calculation. However, to avoid divide by zero errors, it was given a very small positive value in the buckling calculation.

Table 2-4: Containment vessel shell buckling geometric parameters

Geometric Parameter	Inner Shell
Mean radius, R (mm)	33.75 mm
Shell thickness, t (mm)	3.0 mm
R/t	11.25
Unsupported axial length, l_ϕ (mm)	109 mm
Unsupported circumferential length, l_θ (mm)	212.1 mm

Table 2-5: Buckling reduction factors and theoretical buckling stresses

Calculation	Parameter	Hot ambient temp.	Cold ambient temp.
Capacity reduction factors (-1511)	$\alpha_{\phi L}$	0.2	0.3
	$\alpha_{\theta L}$	0.8	0.8
	$\alpha_{\phi\theta L}$	0.8	0.8
Plasticity reduction factors (-1610)	η_ϕ	0.1	0.1
	η_θ	0.1	0.2
	$\eta_{\phi\theta}$	0.0	0.0
Theoretical buckling values (-1712.1.1)	$\sigma_{\phi eL}$	10003 MPa	10702 MPa
	$\sigma_{\theta eL} = \sigma_{reL}$	1574 MPa	1684 MPa
	$\sigma_{\theta eL} = \sigma_{heL}$	1492 MPa	1596 MPa
	$\sigma_{\phi\theta eL}$	3804 MPa	4070 MPa

Table 2-6: Calculated stress at which buckling would occur

Buckling Regime	Stress type	Allowable Buckling Stress (MPa)			
		Hot ambient temp.		Cold ambient temp.	
		NCT	HAC	NCT	HAC
Elastic buckling	Axial compression, σ_{xa}	1035	1545	1211	1807
	Hydrostatic pressure, σ_{ha}	597	891	638	953
	Hoop compression, σ_{ra}	630	940	674	1006
	In-plane shear, $\sigma_{\tau a}$	1522	2271	1628	2430
Inelastic buckling	Axial compression, σ_{xc}	66.0	98.5	86.0	128.4
	Radial external pressure, σ_{rc}	66.0	98.5	86.0	128.4
	In-plane shear, $\sigma_{\tau c}$	39.6	59.1	51.6	77.0

2.2.4 Fatigue

The fatigue analysis was carried out in accordance with section C.3 in NRC Reg. Guide 7.6 [10]. The fatigue analysis was performed as follows:

1. The alternating stress, S_{alt}, was calculated as one-half the maximum absolute value of S'_{12}, S'_{23}, S'_{31} for all possible stress states i and j where σ_1, σ_2 and σ_3 are principal stresses and

   $$S'_{12} = (\sigma_{1i} - \sigma_{1j}) - (\sigma_{2i} - \sigma_{2j})$$
   $$S'_{23} = (\sigma_{2i} - \sigma_{2j}) - (\sigma_{3i} - \sigma_{3j})$$
   $$S'_{31} = (\sigma_{3i} - \sigma_{3j}) - (\sigma_{1i} - \sigma_{1j})$$

   State i is after the bolt pre-load has been applied and state j is after all the other loads have been applied. This calculation of S_{alt} is carried out in the post-processor.

2. S_{alt} is multiplied by the ratio of the modulus of elasticity given on the design fatigue curve to the modulus of elasticity used in the analysis to obtain a value of stress to be used with the design fatigue curves.

3. The highest value of S_{alt} determine in step 2 is then compared with the design fatigue curves (Figure I-9.2.2) in Appendix I of ASME B&PV Section III [11].

The number of cycles that the Safkeg LS CV will undergo is approximately 50 cycles/year for 20 years = 1000 cycles. The number of cycles was multiplied by 10 to give 10000 cycles, to give a safety margin.

3.0 Materials

3.1 Material Properties and Specifications

The material specification for each part in the model is given in Table 3-1. The material properties used in the analysis are given in Table 3-2 to 3-4.

Table 3-1: Material specifications

Part	Material
Containment vessel body	Type 304L stainless steel
Containment vessel lid	Type 304L stainless steel
Shielding	4% Sb Lead
Containment vessel bolts	ASTM-A320/A320M Grade L43 Bolting Steel
Contents of CV	Tungsten

Table 3-2: Mechanical Properties of Type 304L Stainless Steel

Temp (°C)	Design stress intensity S_m (MPa)(2)	Yield strength, S_y (MPa)(3)	Tensile strength, S_u (MPa)(4)	Modulus of Elasticity, E (GPa)(5)	Mean. Coef. Of Thermal Expansion, α (m/m/°C x 10^{-6})(6)
-40	115	172	483	199	14.6
20	115	172	483	195	15.3
149	115	132	422	186	16.6

Notes:
1. Values for SA-240/A240 Grade 304L product specifications.
2. ASME Code, Section II, Part D [11], Table 2A.
3. ASME Code, Section II, Part D [11], Table Y-1.
4. ASME Code, Section II, Part D [11], Table U.
5. ASME Code, Section II, Part D [11], Table TM-1, Material Group G.
6. ASME Code, Section II, Part D [11], Table TE-1, Group 3, Coefficient B (mean from 70°F)
7. Values shown in *italics* are calculated using linear interpolation or linear extrapolation.
8. The yield strength and tensile strength were not used in the FE model as a linear-elastic analysis was performed. These values were used in the stress assessment.
9. A Poisson's ratio of 0.3 and a density of 8030 kg/m^3 were used.

Table 3-3: Mechanical Properties of ASTM-A320/A320M Grade L43 Bolting Steel

Temp (°C)	Design stress intensity S_m (MPa)(1)	Yield strength, S_y (MPa)(2)	Tensile strength, S_u (MPa)(3)	Modulus of Elasticity, E (GPa)(4)	Mean. Coef. Of Thermal Expansion, α (m/m/°C x 10^{-6})(5)
-40	241	723	860	*195*	*10.9*
-30	241	723	860	*194*	*11.0*
25	241	723	860	191	*11.6*
40	241	723	860	*190*	*11.7*
65	*235*	*704*	*860*	*189*	*11.9*
100	226	678	860	187	*12.1*
120	*224*	*671*	*860*	*186*	*12.2*
150	*220*	*660*	*860*	*184*	*12.2*

Notes:

1. ASME Code, Section II, Part D [11], Table 4.
2. In accordance with ASME Code, Section II, Part D [11], Table 4, General Note (a), the yield strength is equal to 3 times the allowable stress value, S_m.
3. Minimum tensile strength from ASME Code, Section II, Part D [11], Table 4.
4. ASME Code, Section II, Part D [11], Table TM-1, Material Group G.
5. ASME Code, Section II, Part D [11], Table TE-1, Group 1, Coefficient B (mean from 70°F)
6. Values shown in *italics* are calculated using linear interpolation or linear extrapolation.
7. The yield strength and tensile strength were not used in the FE model as a linear-elastic analysis was performed. These values were used in the stress assessment.
8. A Poisson's ratio of 0.3 and a density of 7860 kg/m^3 were used.

Table 3-4: Mechanical properties of Lead 4% Sb [12]

Density (kg/m^3)	Modulus of Elasticity (GPa)	Poisson's ratio	Mean. Coef. Of Thermal Expansion, α (m/m/°C x 10^{-6})
11680	16.1	0.44	29

Table 3-5: Mechanical properties of Tungsten (used for insert) [12]

Density (kg/m^3)	Modulus of Elasticity (GPa)	Poisson's ratio	Mean. Coef. Of Thermal Expansion, α (m/m/°C x 10^{-6})
19300	411	0.28	4.5

Table 3-6: Mechanical properties of Cork

Density (kg/m^3)	Modulus of Elasticity (GPa)	Poisson's ratio	Mean. Coef. Of Thermal Expansion, α (m/m/°C x 10^{-6})
280	1	0.3	-

4.0 Normal Conditions of Transport

This section presents the structural evaluation of the package in accordance with Reg. Guides 7.6 and 7.8 [10, 9] when subject to the NCT tests specified in Reg. Guide 7.8. The package is evaluated for each NCT test individually based on the most unfavourable initial conditions.

4.1 NCT 1: Hot Environment

4.1.1 Summary of Pressures and Temperatures

In this case, the package is subject to an ambient temperature of 38°C in still air, with insolation and with maximum decay heat. A thermal analysis has shown that a bounding condition for the containment vessel was at a uniform temperature of 110°C.

The internal gauge pressure was 700 kPa.

4.1.2 Stress Calculations

The stresses in the containment vessel were calculated using the finite element model described in section 2.1.

Figure 8 shows the deformations in the vessel, scaled a by a factor of 30. Some parts appear to be passing through each other but that is not the case because of the high scale factor. The base of the body was distorted by the expansion of the shielding, as the thermal expansion coefficient of lead is greater than that for steel. The expansion of the lead also caused the internal web in the lid to bend upwards.

Figure 9 shows the stress intensity in the vessel for this case. The highest stresses were in the outer part of the body, which is due to the body resisting the thermal expansion of the lead shielding. However, this part of the body does not form part of the containment boundary so these stresses were not assessed. Figure 10 shows the stresses in the flange region. There were a few small regions where the stresses exceeded the yield stress of 207 MPa. These stresses were classed as peak stresses which has a higher allowable value of 414 MPa. These stress were all less than 414 MPa, hence they were acceptable.

4.1.3 Comparison with Allowable Stresses

The stresses in the containment vessel were evaluated at the locations shown in Figure 7. Stress linearization at these locations was carried out using a post-processing option in Abaqus. The stresses were then compared with the allowable stresses given in Table 2-3. A summary of the evaluation is given in Table 4-1. The containment vessel satisfies the requirements of Reg. Guide 7.6 as all of the design margins were above zero.

The stresses in the bolts are summarised in Table 4-2. The bolts satisfy the requirements of Reg. Guide 7.6 as all of the design margins were above zero.

The buckling evaluation is summarised in Table 4-3. As all of the stress components were tensile in this case, the design margin is effectively infinite, hence the containment vessel satisfies the requirements of Reg. Guide 7.6 for buckling.

The fatigue evaluation is given in Table 4-4. As the value of the maximum alternating stress in the containment vessel was below the fatigue threshold, the design margin is effectively infinite. Hence the containment vessel satisfies the requirements of Reg. Guide 7.6 for fatigue.

Table 4-1: Hot Environment: Containment Vessel Stress Summary

Stress type	Maximum stress intensity (MPa)	Stress location	Allowable stress intensity (MPa)	Minimum design margin
P_m	71.5	C10	115	0.61
$P_m + P_b$	109	C13	173	0.59
$P_m + P_b + Q$	166	C11	345	1.08
Bearing	100	Under bolts	132	0.32

Table 4-2: Hot Environment: Bolt Stress Summary

Stress type	Maximum stress (MPa)	Allowable stress intensity (MPa)	Minimum design margin
Average shear	3.32	268	79
Average stress	135	448	2.31
Max. stress	149	672	3.51

Table 4-3: Hot Environment: Buckling Evaluation

Stress component	Stress (MPa)	Design Margin
Axial compression	0[1]	4.3×10^5
Hoop compression	0	
In-plane shear	0.07	

1. If the calculated stress from the FEA is tensile then it is assumed to be zero for the buckling calculation.

Table 4-4: Hot Environment: Fatigue Evaluation

Maximum alternating stress (MPa)	Required no. of cycles	Cycles to failure	Design margin
128	10000	$> 10^{11}$	n/a[1]

1. As the alternating stress was below the fatigue threshold, the design margin is effectively infinite.

4.2 NCT 2: Cold Environment

4.2.1 Summary of Pressures and Temperatures

In this case, the package is subject to an ambient temperature of -40°C in still air, zero insolation and with zero decay heat.

This case assumed that the external pressure was 100 kPa. The internal pressure was 0 kPa absolute, so the internal gauge pressure applied to the model was -100 kPa.

4.2.2 Stress Calculations

The stresses in the containment vessel were calculated using the finite element model described in section 2.1.

Figure 11 shows the deformations in the vessel, scaled a by a factor of 30. Some parts appear to be passing through each other but that is not the case because of the high scale factor. The lead shielding in the body contracts more than the body itself. The shielding gets wedged between the 30° angle near the top of the outer part of the body and the base of the inner part of the body. This causes some compressive stress in the inner part of the body. The shrinkage of the lead shielding in the lid does not cause any deformation of the lid.

Figure 12 shows the stress intensity in the vessel for this case. The stresses were low for most of the vessel. The highest stresses were in the inner part of the body.

4.2.3 Comparison with Allowable Stresses

The stresses in the containment vessel were evaluated at the locations shown in Figure 7. Stress linearization at these locations was carried out using a post-processing option in Abaqus. The stresses were then compared with the allowable stresses given in Table 2-3. A summary of the evaluation is given in Table 4-5. The containment vessel satisfies the requirements of Reg. Guide 7.6 as all of the design margins were above zero.

The stresses in the bolts are summarised in Table 4-6. The bolts satisfy the requirements of Reg. Guide 7.6 as all of the design margins were above zero.

The buckling evaluation is summarised in Table 4-7. The design margin was above zero hence the containment vessel satisfies the requirements of Reg. Guide 7.6 for buckling.

The fatigue evaluation is given in Table 4-8. As the value of the maximum alternating stress in the containment vessel was below the fatigue threshold, the design margin is effectively infinite. Hence the containment vessel satisfies the requirements of Reg. Guide 7.6 for fatigue.

Table 4-5: Cold Environment: Containment Vessel Stress Summary

Stress type	Maximum stress intensity (MPa)	Stress location	Allowable stress intensity (MPa)	Minimum design margin
P_m	50.3	C2	115	1.29
$P_m + P_b$	96.1	C2	173	0.80
$P_m + P_b + Q$	92.5	C4	345	2.73
Bearing	61.9	Under bolts	172	1.78

Table 4-6: Cold Environment: Bolt Stress Summary

Stress type	Maximum stress (MPa)	Allowable stress intensity (MPa)	Minimum design margin
Average shear	1.32	289	218
Average stress	83.4	482	4.77
Max. stress	149	723	3.85

Table 4-7: Cold Environment: Buckling Evaluation

Stress component	Stress (MPa)	Design Margin
Axial compression	20.9	1.27
Hoop compression	37.9	
In-plane shear	0.46	

Table 4-8: Cold Environment: Fatigue Evaluation

Maximum alternating stress (MPa)	Required no. of cycles	Cycles to failure	Design margin
66.4	10000	$> 10^{11}$	n/a(1)

1. As the alternating stress was below the fatigue threshold, the design margin is effectively infinite.

4.3 NCT 3: Reduced External Pressure

4.3.1 Summary of Pressures and Temperatures

In this case, the package is subject to an ambient temperature of 38°C in still air, with insolation and with maximum decay heat. A thermal analysis has shown that a bounding condition for the containment vessel was at a uniform temperature of 110°C.

This case assumed that the external pressure was reduced to 24.5 kPa. The internal pressure was 800 kPa absolute, so the internal gauge pressure applied to the model was 775.5 kPa.

4.3.2 Stress Calculations

The stresses in the containment vessel were calculated using the finite element model described in section 2.1.

The displacements for this case are similar to those for case NCT1. Figure 13 shows the stress intensity in the vessel for this case. The regions of high stress are similar to those for case NCT1. This is because the stresses are dominated by the thermal stresses rather than those due to the pressure.

4.3.3 Comparison with Allowable Stresses

The stresses in the containment vessel were evaluated at the locations shown in Figure 7. Stress linearization at these locations was carried out using a post-processing option in Abaqus. The stresses were then compared with the allowable stresses given in Table 2-3.

A summary of the evaluation is given in Table 4-9. The containment vessel satisfies the requirements of Reg. Guide 7.6 as all of the design margins were above zero.

The stresses in the bolts are summarised in Table 4-10. The bolts satisfy the requirements of Reg. Guide 7.6 as all of the design margins were above zero.

The buckling evaluation is summarised in Table 4-11. As all of the stress components were tensile in this case, the design margin is effectively infinite, hence the containment vessel satisfies the requirements of Reg. Guide 7.6 for buckling.

The fatigue evaluation is given in Table 4-12. As the value of the maximum alternating stress in the containment vessel was below the fatigue threshold, the design margin is effectively infinite. Hence the containment vessel satisfies the requirements of Reg. Guide 7.6 for fatigue.

Table 4-9: Reduced External Pressure: Containment Vessel Stress Summary

Stress type	Maximum stress intensity (MPa)	Stress location	Allowable stress intensity (MPa)	Minimum design margin
P_m	71.7	C10	115	0.60
$P_m + P_b$	108	C13	173	0.59
$P_m + P_b + Q$	167	C11	345	1.07
Bearing	100	Under bolts	132	0.32

Table 4-10: Reduced External Pressure: Bolt Stress Summary

Stress type	Maximum stress (MPa)	Allowable stress intensity (MPa)	Minimum design margin
Average shear	3.29	268	80.5
Average stress	135	448	2.31
Max. stress	116	672	4.75

Table 4-11: Reduced External Pressure: Buckling Evaluation

Stress component	Stress (MPa)	Design Margin
Axial compression	0[1]	3.1×10^5
Hoop compression	0	
In-plane shear	0.07	

1. If the calculated stress from the FEA is tensile then it is assumed to be zero for the buckling calculation.

Table 4-12: Reduced External Pressure: Fatigue Evaluation

Maximum alternating stress (MPa)	Required no. of cycles	Cycles to failure	Design margin
128	10000	$> 10^{11}$	n/a[1]

1. As the alternating stress was below the fatigue threshold, the design margin is effectively infinite.

4.4 NCT 4: Increased External Pressure

4.4.1 Summary of Pressures and Temperatures

In this case, the package is subject to an ambient temperature of -29°C in still air, zero insolation and with zero decay heat.

This case assumed that the external pressure was increased to 140 kPa. The internal pressure was 0 kPa absolute, so the internal gauge pressure applied to the model was -140 kPa.

4.4.2 Stress Calculations

The stresses in the containment vessel were calculated using the finite element model described in section 2.1.

The displacements for this case are very similar to those for case NCT2. Figure 14 shows the stress intensity in the vessel for this case. The regions of high stress are similar to those for case NCT2. This is because the stresses are dominated by the thermal stresses rather than those due to the pressure.

4.4.3 Comparison with Allowable Stresses

The stresses in the containment vessel were evaluated at the locations shown in Figure 7. Stress linearization at these locations was carried out using a post-processing option in Abaqus. The stresses were then compared with the allowable stresses given in Table 2-3. A summary of the evaluation is given in Table 4-13. The containment vessel satisfies the requirements of Reg. Guide 7.6 as all of the design margins were above zero.

The stresses in the bolts are summarised in Table 4-14. The bolts satisfy the requirements of Reg. Guide 7.6 as all of the design margins were above zero.

The buckling evaluation is summarised in Table 4-15. The design margin was above zero hence the containment vessel satisfies the requirements of Reg. Guide 7.6 for buckling.

The fatigue evaluation is given in Table 4-16. As the value of the maximum alternating stress in the containment vessel was below the fatigue threshold, the design margin is effectively infinite. Hence the containment vessel satisfies the requirements of Reg. Guide 7.6 for fatigue.

Table 4-13: Increased External Pressure: Containment Vessel Stress Summary

Stress type	Maximum stress intensity (MPa)	Stress location	Allowable stress intensity (MPa)	Minimum design margin
P_m	42.0	C2	115	1.74
$P_m + P_b$	81.1	C2	173	1.13
$P_m + P_b + Q$	76.7	C4	345	3.50
Bearing	64.4	Under bolts	172	1.67

Table 4-14: Increased External Pressure: Bolt Stress Summary

Stress type	Maximum stress (MPa)	Allowable stress intensity (MPa)	Minimum design margin
Average shear	1.2	289	247
Average stress	86.9	482	4.54
Max. stress	119	723	5.08

Table 4-15: Increased External Pressure: Buckling Evaluation

Stress component	Stress (MPa)	Design Margin
Axial compression	16.3	1.88
Hoop compression	29.9	
In-plane shear	0.42	

Table 4-16: Increased External Pressure: Fatigue Evaluation

Maximum alternating stress (MPa)	Required no. of cycles	Cycles to failure	Design margin
56.9	10000	$> 10^{11}$	n/a(1)

1. As the alternating stress was below the fatigue threshold, the design margin is effectively infinite.

4.5 NCT 5: Vibration (hot)

4.5.1 Summary of Pressures and Temperatures

In this case, the package is subject to an ambient temperature of 38°C in still air, with insolation and with maximum decay heat. A thermal analysis has shown that a bounding condition for the containment vessel was at a uniform temperature of 110°C.

This case assumed that the external pressure was 100 kPa. The internal pressure was 800 kPa absolute, so the internal gauge pressure applied to the model was 700 kPa.

A body force was applied to the model which was equivalent to a downward vertical acceleration of 10g. This was assumed to be the load due to vibration.

4.5.2 Stress Calculations

The stresses in the containment vessel were calculated using the finite element model described in section 2.1.

The displacements for this case were similar to those for case NCT1. Figure 15 shows the stress intensity in the vessel for this case. The regions of high stress are similar to those for case NCT1. This is because the stresses are dominated by the thermal stresses rather than those due to the vibration load.

4.5.3 Comparison with Allowable Stresses

The stresses in the containment vessel were evaluated at the locations shown in Figure 7. Stress linearization at these locations was carried out using a post-processing option in

Abaqus. The stresses were then compared with the allowable stresses given in Table 2-3. A summary of the evaluation is given in Table 4-9. The containment vessel satisfies the requirements of Reg. Guide 7.6 as all of the design margins were above zero.

The stresses in the bolts are summarised in Table 4-10. The bolts satisfy the requirements of Reg. Guide 7.6 as all of the design margins were above zero.

The buckling evaluation is summarised in Table 4-11. As all of the stress components were tensile in this case, the design margin is effectively infinite, hence the containment vessel satisfies the requirements of Reg. Guide 7.6 for buckling.

Table 4-17: Vibration (hot): Containment Vessel Stress Summary

Stress type	Maximum stress intensity (MPa)	Stress location	Allowable stress intensity (MPa)	Minimum design margin
P_m	72.0	C10	115	0.60
$P_m + P_b$	109	C13	173	0.59
$P_m + P_b + Q$	168	C11	345	1.06
Bearing	100	Under bolts	132	0.32

Table 4-18: Vibration (hot): Bolt Stress Summary

Stress type	Maximum stress (MPa)	Allowable stress intensity (MPa)	Minimum design margin
Average shear	3.28	268	80.7
Average stress	135	448	2.31
Max. stress	156	672	3.51

Table 4-19: Vibration (hot): Buckling Evaluation

Stress component	Stress (MPa)	Design Margin
Axial compression	0[1]	4.3×10^5
Hoop compression	0	
In-plane shear	0.06	

1. If the calculated stress from the FEA is tensile then it is assumed to be zero for the buckling calculation.

4.6 NCT 6: Vibration (cold)

4.6.1 Summary of Pressures and Temperatures

In this case, the package is subject to an ambient temperature of -29°C in still air, zero insolation and with zero decay heat.

This case assumed that the external pressure was 100 kPa. The internal pressure was 0 kPa absolute, so the internal gauge pressure applied to the model was -100 kPa.

A body force was applied to the model which was equivalent to a downward vertical acceleration of 10g. This was assumed to be the load due to vibration.

4.6.2 Stress Calculations

The stresses in the containment vessel were calculated using the finite element model described in section 2.1.

The displacements for this case are very similar to those for case NCT2. Figure 16 shows the stress intensity in the vessel for this case. The regions of high stress are similar to those for case NCT2. This is because the stresses are dominated by the thermal stresses rather than those due to the vibration loads.

4.6.3 Comparison with Allowable Stresses

The stresses in the containment vessel were evaluated at the locations shown in Figure 7. Stress linearization at these locations was carried out using a post-processing option in Abaqus. The stresses were then compared with the allowable stresses given in Table 2-3. A summary of the evaluation is given in Table 4-20. The containment vessel satisfies the requirements of Reg. Guide 7.6 as all of the design margins were above zero.

The stresses in the bolts are summarised in Table 4-21. The bolts satisfy the requirements of Reg. Guide 7.6 as all of the design margins were above zero.

The buckling evaluation is summarised in Table 4-22. The design margin was above zero hence the containment vessel satisfies the requirements of Reg. Guide 7.6 for buckling.

Table 4-20: Vibration (cold): Containment Vessel Stress Summary

Stress type	Maximum stress intensity (MPa)	Stress location	Allowable stress intensity (MPa)	Minimum design margin
P_m	45.8	C7	115	1.51
$P_m + P_b$	79.3	C2	173	1.17
$P_m + P_b + Q$	77.3	C4	345	3.46
Bearing	64.2	Under bolts	172	1.67

Table 4-21: Vibration (cold): Bolt Stress Summary

Stress type	Maximum stress (MPa)	Allowable stress intensity (MPa)	Minimum design margin
Average shear	1.08	289	268
Average stress	86.9	482	4.55
Max. stress	119	723	5.08

Table 4-22: Vibration (cold): Buckling Evaluation

Stress component	Stress (MPa)	Design Margin
Axial compression	15.0	4.26
Hoop compression	16.3	
In-plane shear	0.42	

4.7 NCT 7: Free drop on lid (hot)

4.7.1 Summary of Pressures and Temperatures

In this case, the package is subject to an ambient temperature of 38°C in still air, with insolation and with maximum decay heat. A thermal analysis has shown that a bounding condition for the containment vessel was at a uniform temperature of 110°C.

This case assumed that the external pressure was 100 kPa. The internal pressure was 800 kPa absolute, so the internal gauge pressure applied to the model was 700 kPa.

A body force was applied to the model which was equivalent to an upward vertical acceleration of 180g. This was assumed to be the load due to an impact on the lid from a height if 1.2 metres. The cork impact limiter was included in this model.

4.7.2 Stress Calculations

Figure 17 the deformations in the vessel, scaled a by a factor of 30. Compared with case NCT1, there was slightly more distortion of the lid. This bowing was caused by the impact of the tungsten insert with the bottom of the lid and the effect of the mass of the lead shielding. Figure 18 shows the stress intensity in the vessel for this case. The stress distribution is similar to that for case NCT1, but with some additional stress in the lid.

4.7.3 Comparison with Allowable Stresses

The stresses in the containment vessel were evaluated at the locations shown in Figure 7. Stress linearization at these locations was carried out using a post-processing option in Abaqus. The stresses were then compared with the allowable stresses given in Table 2-3. A summary of the evaluation is given in Table 4-17. The containment vessel satisfies the requirements of Reg. Guide 7.6 as all of the design margins were above zero.

The stresses in the bolts are summarised in Table 4-24. The bolts satisfy the requirements of Reg. Guide 7.6 as all of the design margins were above zero.

The buckling evaluation is summarised in Table 4-25. As all of the stress components were tensile in this case, the design margin is effectively infinite, hence the containment vessel satisfies the requirements of Reg. Guide 7.6 for buckling.

Table 4-23: Drop on lid from 1.2m (hot): Containment Vessel Stress Summary

Stress type	Maximum stress intensity (MPa)	Stress location	Allowable stress intensity (MPa)	Minimum design margin
P_m	69.8	C10	115	0.65
$P_m + P_b$	116	C13	173	0.48
$P_m + P_b + Q$	153	C11	345	1.25
Bearing	101	Under bolts	132	0.32

Table 4-24: Drop on lid from 1.2m (hot): Bolt Stress Summary

Stress type	Maximum stress (MPa)	Allowable stress intensity (MPa)	Minimum design margin
Average shear	8.29	268	31.4
Average stress	136	448	2.30
Max. stress	151	672	3.46

Table 4-25: Drop on lid from 1.2m (hot): Buckling Evaluation

Stress component	Stress (MPa)	Design Margin
Axial compression	0[1]	6.2×10^5
Hoop compression	0	
In-plane shear	0.05	

1. If the calculated stress from the FEA is tensile then it is assumed to be zero for the buckling calculation.

4.8 NCT 8: Free drop on lid (cold)

4.8.1 Summary of Pressures and Temperatures

In this case, the package is subject to an ambient temperature of -29°C in still air, zero insolation and with zero decay heat.

This case assumed that the external pressure was 100 kPa. The internal pressure was 0 kPa absolute, so the internal gauge pressure applied to the model was -100 kPa.

A body force was applied to the model which was equivalent to an upward vertical acceleration of 180g. This was assumed to be the load due to an impact on the lid from a height of 1.2 metres. The cork impact limiter was included in this model.

4.8.2 Stress Calculation

Figure 19 shows the stress intensity in the vessel for this case. The stress distribution is similar to that for case NCT2, but with some additional stress in the lid.

4.8.3 Comparison with Allowable Stresses

The stresses in the containment vessel were evaluated at the locations shown in Figure 7. Stress linearization at these locations was carried out using a post-processing option in Abaqus. The stresses were then compared with the allowable stresses given in Table 2-3. A summary of the evaluation is given in Table 4-26. The containment vessel satisfies the requirements of Reg. Guide 7.6 as all of the design margins were above zero.

The stresses in the bolts are summarised in Table 4-27. The bolts satisfy the requirements of Reg. Guide 7.6 as all of the design margins were above zero.

The buckling evaluation is summarised in Table 4-28. The design margin was above zero hence the containment vessel satisfies the requirements of Reg. Guide 7.6 for buckling.

Table 4-26: Drop on lid from 1.2m (cold): Containment Vessel Stress Summary

Stress type	Maximum stress intensity (MPa)	Stress location	Allowable stress intensity (MPa)	Minimum design margin
P_m	49.7	C2	115	1.31
$P_m + P_b$	71.9	C2	173	1.40
$P_m + P_b + Q$	116	C7	345	1.97
Bearing	65.0	Under bolts	172	1.64

Table 4-27: Drop on lid from 1.2m (cold): Bolt Stress Summary

Stress type	Maximum stress (MPa)	Allowable stress intensity (MPa)	Minimum design margin
Average shear	5.74	289	49.4
Average stress	87.8	482	4.49
Max. stress	122	723	4.92

Table 4-28: Drop on lid from 1.2m (cold): Buckling Evaluation

Stress component	Stress (MPa)	Design Margin
Axial compression	30.0	1.87
Hoop compression	24.0	
In-plane shear	0.21	

4.9 NCT 9: Free drop on side (hot)

4.9.1 Summary of Pressures and Temperatures

In this case, the package is subject to an ambient temperature of 38°C in still air, with insolation and with maximum decay heat. A thermal analysis has shown that a bounding condition for the containment vessel was at a uniform temperature of 110°C.

This case assumed that the external pressure was 100 kPa. The internal pressure was 800 kPa absolute, so the internal gauge pressure applied to the model was 700 kPa.

A body force was applied to the model which was equivalent to an acceleration of 180g. This was assumed to be the load due to an impact on the side from a height of 1.2 metres. The cork impact limiter was included in this model.

4.9.2 Stress Calculations

Figure 20 shows the displacements for this case, magnified by a factor of 30. The displacements are similar to those for case NCT1, but the inner part of the body has rotated clockwise slightly, compressing the lead shielding in that region. Figure 21 shows the stress intensity in the vessel. The stress exceeded yield in some localized regions in the containment vessel, but do not exceed the allowable value for a peak stress.

The high stresses in the outer part of the body are not of concern as this is not part of the pressure containment boundary and is not assessed against the allowable stresses.

4.9.3 Comparison with Allowable Stresses

The stresses in the containment vessel were evaluated at the locations shown in Figure 7. Stress linearization at these locations was carried out using a post-processing option in Abaqus. The stresses were then compared with the allowable stresses given in Table 2-3. A summary of the evaluation is given in Table 4-29. Locations with a name ending "-180" are on the opposite side of the vessel to those shown in Figure 7, i.e. they are on the side of the vessel closest to the impact with the cork impact limiter. The containment vessel satisfies the requirements of Reg. Guide 7.6 as all of the design margins were above zero.

The stresses in the bolts are summarised in Table 4-30. The bolts satisfy the requirements of Reg. Guide 7.6 as all of the design margins were above zero.

The buckling evaluation is summarised in Table 4-31. The containment vessel satisfies the requirements of Reg. Guide 7.6 for buckling.

Table 4-29: Drop on side from 1.2m (hot): Containment Vessel Stress Summary

Stress type	Maximum stress intensity (MPa)	Stress location	Allowable stress intensity (MPa)	Minimum design margin
P_m	77.9	C10-180	115	0.48
$P_m + P_b$	107	C13	173	0.63
$P_m + P_b + Q$	186	C11-180	345	0.85
Bearing	100	Under bolts	132	0.32

Table 4-30: Drop on side from 1.2m (hot): Bolt Stress Summary

Stress type	Maximum stress (MPa)	Allowable stress intensity (MPa)	Minimum design margin
Average shear	5.92	268	44.3
Average stress	135	448	2.31
Max. stress	150	672	3.48

Table 4-31: Drop on side from 1.2m (hot): Buckling Evaluation

Stress component	Stress (MPa)	Design Margin
Axial compression	5.20	11.7
Hoop compression	0	
In-plane shear	0.57	

1. If the calculated stress from the FEA is tensile then it is assumed to be zero for the buckling calculation.

4.10 NCT 10: Free drop on side (cold)

In this case, the package is subject to an ambient temperature of -29°C in still air, zero insolation and with zero decay heat.

This case assumed that the external pressure was 100 kPa. The internal pressure was 0 kPa absolute, so the internal gauge pressure applied to the model was -100 kPa.

A body force was applied to the model which was equivalent to an acceleration of 180g. This was assumed to be the load due to an impact on the side from a height of 1.2 metres. The cork impact limiter was included in this model.

4.10.1 Stress Calculations

Figure 22 shows the displacements for this case, magnified by a factor of 30. The lead shielding in the body, along with the inner part of the body and the tungsten has rotated clockwise slightly.

Figure 23 shows the stress intensity for this case.

4.10.2 Comparison with Allowable Stresses

The stresses in the containment vessel were evaluated at the locations shown in Figure 7. Stress linearization at these locations was carried out using a post-processing option in Abaqus. The stresses were then compared with the allowable stresses given in Table 2-3. A summary of the evaluation is given in Table 4-32. Locations with a name ending "-180" are on the opposite side of the vessel to those shown in Figure 7, i.e. they are on the side of the vessel closest to the impact with the cork impact limiter. The containment vessel satisfies the requirements of Reg. Guide 7.6 as all of the design margins were above zero.

The stresses in the bolts are summarised in Table 4-33. The bolts satisfy the requirements of Reg. Guide 7.6 as all of the design margins were above zero.

The buckling evaluation is summarised in Table 4-34. The design margin was above zero hence the containment vessel satisfies the requirements of Reg. Guide 7.6 for buckling.

Table 4-32: Drop on side 1.2m (cold): Containment Vessel Stress Summary

Stress type	Maximum stress intensity (MPa)	Stress location	Allowable stress intensity (MPa)	Minimum design margin
P_m	58.7	C2-180	115	0.73
$P_m + P_b$	119	C2-180	173	0.25
$P_m + P_b + Q$	99.2	C7-180	345	2.48
Bearing	66.4	Under bolts	172	1.59

Table 4-33: Drop on side from 1.2m (cold): Bolt Stress Summary

Stress type	Maximum stress (MPa)	Allowable stress intensity (MPa)	Minimum design margin
Average shear	2.61	289	110
Average stress	89.7	482	4.38
Max. stress	121	723	4.96

Table 4-34: Drop on side from 1.2m (cold): Buckling Evaluation

Stress component	Stress (MPa)	Design Margin
Axial compression	20.7	1.61
Hoop compression	34.4	
In-plane shear	0.30	

4.11 NCT 11: Free drop on corner (hot)

4.11.1 Summary of Pressures and Temperatures

In this case, the package is subject to an ambient temperature of 38°C in still air, with insolation and with maximum decay heat. A thermal analysis has shown that a bounding condition for the containment vessel was at a uniform temperature of 110°C.

This case assumed that the external pressure was 100 kPa. The internal pressure was 800 kPa absolute, so the internal gauge pressure applied to the model was 700 kPa.

A body force was applied to the model which was equivalent to an acceleration of 180g. This was assumed to be the load due to an impact on the top corner from a height of 1.2 metres. The cork impact limiter was included in this model.

4.11.2 Stress Calculations

Figure 24 shows the stress intensity for this case.

4.11.3 Comparison with Allowable Stresses

The stresses in the containment vessel were evaluated at the locations shown in Figure 7. Stress linearization at these locations was carried out using a post-processing option in Abaqus. The stresses were then compared with the allowable stresses given in Table 2-3. A summary of the evaluation is given in Table 4-35. Locations with a name ending "-180" are on the opposite side of the vessel to those shown in Figure 7, i.e. they are on the side of the vessel closest to the impact with the cork impact limiter. The containment vessel satisfies the requirements of Reg. Guide 7.6 as all of the design margins were above zero.

The stresses in the bolts are summarised in Table 4-36. The bolts satisfy the requirements of Reg. Guide 7.6 as all of the design margins were above zero.

The buckling evaluation is summarised in Table 4-37. The containment vessel satisfies the requirements of Reg. Guide 7.6 for buckling.

Table 4-35: Drop on corner from 1.2m (hot): Containment Vessel Stress Summary

Stress type	Maximum stress intensity (MPa)	Stress location	Allowable stress intensity (MPa)	Minimum design margin
P_m	73.9	C10-180	115	0.56
$P_m + P_b$	112	C13-180	173	0.53
$P_m + P_b + Q$	167	C11	345	1.06
Bearing	102	Under bolts	132	0.30

Table 4-36: Drop on corner from 1.2m (hot): Bolt Stress Summary

Stress type	Maximum stress (MPa)	Allowable stress intensity (MPa)	Minimum design margin
Average shear	7.82	268	33.3
Average stress	138	448	2.26
Max. stress	150	672	3.48

Table 4-37: Drop on corner from 1.2m (hot): Buckling Evaluation

Stress component	Stress (MPa)	Design Margin
Axial compression	4.14	14.9
Hoop compression	0	
In-plane shear	0.11	

1. If the calculated stress from the FEA is tensile then it is assumed to be zero for the buckling calculation.

4.12 NCT 12: Free drop on corner (cold)

4.12.1 Summary of Pressures and Temperatures

In this case, the package is subject to an ambient temperature of -29°C in still air, zero insolation and with zero decay heat.

This case assumed that the external pressure was 100 kPa. The internal pressure was 0 kPa absolute, so the internal gauge pressure applied to the model was -100 kPa.

A body force was applied to the model which was equivalent to an acceleration of 180g. This was assumed to be the load due to an impact on the top corner from a height of 1.2 metres. The cork impact limiter was included in this model.

4.12.2 Stress Calculations

Figure 25 shows the stress intensity for this case. The stress distribution is similar to that for case NCT10.

4.12.3 Comparison with Allowable Stresses

The stresses in the containment vessel were evaluated at the locations shown in Figure 7. Stress linearization at these locations was carried out using a post-processing option in Abaqus. The stresses were then compared with the allowable stresses given in Table 2-3. A summary of the evaluation is given in Table 4-38. Locations with a name ending "-180"

are on the opposite side of the vessel to those shown in Figure 7, i.e. they are on the side of the vessel closest to the impact with the cork impact limiter. The containment vessel satisfies the requirements of Reg. Guide 7.6 as all of the design margins were above zero.

The stresses in the bolts are summarised in Table 4-39. The bolts satisfy the requirements of Reg. Guide 7.6 as all of the design margins were above zero.

The buckling evaluation is summarised in Table 4-40. The design margin was above zero hence the containment vessel satisfies the requirements of Reg. Guide 7.6 for buckling.

Table 4-38: Drop on corner 1.2m (cold): Containment Vessel Stress Summary

Stress type	Maximum stress intensity (MPa)	Stress location	Allowable stress intensity (MPa)	Minimum design margin
P_m	61.5	C7-180	115	0.87
$P_m + P_b$	125	C2-180	173	0.38
$P_m + P_b + Q$	133	C7-180	345	1.59
Bearing	66.1	Under bolts	172	1.60

Table 4-39: Drop on corner from 1.2m (cold): Bolt Stress Summary

Stress type	Maximum stress (MPa)	Allowable stress intensity (MPa)	Minimum design margin
Average shear	9.53	289	29.3
Average stress	89.2	482	4.40
Max. stress	120	723	5.00

Table 4-40: Drop on corner from 1.2m (cold): Buckling Evaluation

Stress component	Stress (MPa)	Design Margin
Axial compression	28.8	1.51
Hoop compression	34.3	
In-plane shear	0.16	

5.0 Hypothetical Accident Conditions

This section presents the structural evaluation of the package in accordance with Reg. Guides 7.6 and 7.8 [10, 9] when subject to the HAC tests specified in Reg. Guide 7.8. The package is evaluated for each HAC test individually based on the most unfavourable initial conditions.

5.1 HAC 1: Free drop on lid (hot)

5.1.1 Summary of Pressures and Temperatures

In this case, the package is subject to an ambient temperature of 38°C in still air, with insolation and with maximum decay heat. A thermal analysis has shown that a bounding condition for the containment vessel was at a uniform temperature of 150°C.

This case assumed that the external pressure was 100 kPa. The internal pressure was 800 kPa absolute, so the internal gauge pressure applied to the model was 700 kPa.

A body force was applied to the model which was equivalent to an upward vertical acceleration of 300g. This was assumed to be the load due to an impact on the lid from a height of 9 metres. The cork impact limiter was included in this model.

5.1.2 Stress Calculations

Figure 26 shows the stress intensity in the vessel for this case. The stress distribution is similar to that for case NCT7.

5.1.3 Comparison with Allowable Stresses

The stresses in the containment vessel were evaluated at the locations shown in Figure 7. Stress linearization at these locations was carried out using a post-processing option in Abaqus. The stresses were then compared with the allowable stresses given in Table 2-3. A summary of the evaluation is given in Table 5-1. The containment vessel satisfies the requirements of Reg. Guide 7.6 as all of the design margins were above zero.

The stresses in the bolts are summarised in Table 5-2. The bolts satisfy the requirements of Reg. Guide 7.6 as all of the design margins were above zero.

The buckling evaluation is summarised in Table 5-3. The containment vessel satisfies the requirements of Reg. Guide 7.6 for buckling.

Table 5-1: Drop on lid from 9m (hot): Containment Vessel Stress Summary

Stress type	Maximum stress intensity (MPa)	Stress location	Allowable stress intensity (MPa)	Minimum design margin
P_m	103	C9	276	1.68
$P_m + P_b$	175	C13	414	1.36

Table 5-2: Drop on lid from 9m (hot): Bolt Stress Summary

Stress type	Maximum stress (MPa)	Allowable stress intensity (MPa)	Minimum design margin
Average shear	14.1	361	24.6
Average stress	152	602	2.95

Table 5-3: Drop on lid from 9m (hot): Buckling Evaluation

Stress component	Stress (MPa)	Design Margin
Axial compression	0 (1)	9.6×10^5
Hoop compression	0	
In-plane shear	0.06	

1. If the calculated stress from the FEA is tensile then it is assumed to be zero for the buckling calculation.

5.2 HAC 2: Free drop on lid (cold)

5.2.1 Summary of Pressures and Temperatures

In this case, the package is subject to an ambient temperature of -29°C in still air, zero insolation and with zero decay heat.

This case assumed that the external pressure was 100 kPa. The internal pressure was 0 kPa absolute, so the internal gauge pressure applied to the model was -100 kPa.

A body force was applied to the model which was equivalent to an upward vertical acceleration of 300g. This was assumed to be the load due to an impact on the lid from a height of 9 metres. The cork impact limiter was included in this model.

5.2.2 Stress Calculation

Figure 27 shows the stress intensity for this case. The stress distribution is similar to that for case NCT8.

5.2.3 Comparison with Allowable Stresses

The stresses in the containment vessel were evaluated at the locations shown in Figure 7. Stress linearization at these locations was carried out using a post-processing option in Abaqus. The stresses were then compared with the allowable stresses given in Table 2-3. A summary of the evaluation is given in Table 5-4. The containment vessel satisfies the requirements of Reg. Guide 7.6 as all of the design margins were above zero.

The stresses in the bolts are summarised in Table 5-5. The bolts satisfy the requirements of Reg. Guide 7.6 as all of the design margins were above zero.

The buckling evaluation is summarised in Table 5-6. The containment vessel satisfies the requirements of Reg. Guide 7.6 for buckling.

Table 5-4: Drop on lid from 9m (cold): Containment Vessel Stress Summary

Stress type	Maximum stress intensity (MPa)	Stress location	Allowable stress intensity (MPa)	Minimum design margin
P_m	78.3	C7	276	2.52
$P_m + P_b$	162	C8	414	1.56

Table 5-5: Drop on lid from 9m (cold): Bolt Stress Summary

Stress type	Maximum stress (MPa)	Allowable stress intensity (MPa)	Minimum design margin
Average shear	8.68	361	40.6
Average stress	88.5	602	5.81

Table 5-6: Drop on lid from 9m (cold): Buckling Evaluation

Stress component	Stress (MPa)	Design Margin
Axial compression	45.3	1.83
Hoop compression	25.6	
In-plane shear	0.07	

5.3 HAC 3: Free drop on side (hot)

5.3.1 Summary of Pressures and Temperatures

In this case, the package is subject to an ambient temperature of 38°C in still air, with insolation and with maximum decay heat. A thermal analysis has shown that a bounding condition for the containment vessel was at a uniform temperature of 150°C.

This case assumed that the external pressure was 100 kPa. The internal pressure was 800 kPa absolute, so the internal gauge pressure applied to the model was 700 kPa.

A body force was applied to the model which was equivalent to an acceleration of 300g. This was assumed to be the load due to an impact on the side from a height of 9 metres. The cork impact limiter was included in this model.

5.3.2 Stress Calculations

Figure 28 shows the stresses for this case. The stress distribution is similar to that for case NCT9, but with a greater magnitude.

5.3.3 Comparison with Allowable Stresses

The stresses in the containment vessel were evaluated at the locations shown in Figure 7. Stress linearization at these locations was carried out using a post-processing option in Abaqus. The stresses were then compared with the allowable stresses given in Table 2-3. A summary of the evaluation is given in Table 5-7. Locations with a name ending "-180" are on the opposite side of the vessel to those shown in Figure 7, i.e. they are on the side of the vessel closest to the impact with the cork impact limiter. The containment vessel satisfies the requirements of Reg. Guide 7.6 as all of the design margins were above zero.

The stresses in the bolts are summarised in Table 5-8. The bolts satisfy the requirements of Reg. Guide 7.6 as all of the design margins were above zero.

The buckling evaluation is summarised in Table 5-9. The containment vessel satisfies the requirements of Reg. Guide 7.6 for buckling.

Table 5-7: Drop on side from 9m (hot): Containment Vessel Stress Summary

Stress type	Maximum stress intensity (MPa)	Stress location	Allowable stress intensity (MPa)	Minimum design margin
P_m	109	C10-180	276	1.53
$P_m + P_b$	188	C10-180	414	1.20

Table 5-8: Drop on side from 9m (hot): Bolt Stress Summary

Stress type	Maximum stress (MPa)	Allowable stress intensity (MPa)	Minimum design margin
Average shear	8.83	361	39.9
Average stress	156	602	2.87

Table 5-9: Drop on side from 9m (hot): Buckling Evaluation

Stress component	Stress (MPa)	Design Margin
Axial compression	11.9	7.30
Hoop compression	0 (1)	
In-plane shear	0.81	

1. If the calculated stress from the FEA is tensile then it is assumed to be zero for the buckling calculation.

5.4 HAC 4: Free drop on side (cold)

In this case, the package is subject to an ambient temperature of -29°C in still air, zero insolation and with zero decay heat.

This case assumed that the external pressure was 100 kPa. The internal pressure was 0 kPa absolute, so the internal gauge pressure applied to the model was -100 kPa.

A body force was applied to the model which was equivalent to an acceleration of 300g. This was assumed to be the load due to an impact on the side from a height of 9 metres. The cork impact limiter was included in this model.

5.4.1 Stress Calculation

Figure 29 shows the stress intensity for this case. The stress distribution is similar to that for case NCT10, but with a greater magnitude.

5.4.2 Comparison with Allowable Stresses

The stresses in the containment vessel were evaluated at the locations shown in Figure 7. Stress linearization at these locations was carried out using a post-processing option in

Abaqus. The stresses were then compared with the allowable stresses given in Table 2-3. A summary of the evaluation is given in Table 5-10. Locations with a name ending "-180" are on the opposite side of the vessel to those shown in Figure 7, i.e. they are on the side of the vessel closest to the impact with the cork impact limiter. The containment vessel satisfies the requirements of Reg. Guide 7.6 as all of the design margins were above zero.

The stresses in the bolts are summarised in Table 5-11. The bolts satisfy the requirements of Reg. Guide 7.6 as all of the design margins were above zero.

The buckling evaluation is summarised in Table 5-12. The containment vessel satisfies the requirements of Reg. Guide 7.6 for buckling.

Table 5-10: Drop on side from 9m (cold): Containment Vessel Stress Summary

Stress type	Maximum stress intensity (MPa)	Stress location	Allowable stress intensity (MPa)	Minimum design margin
P_m	79.5	C2-180	276	2.47
$P_m + P_b$	167	C2-180	414	1.48

Table 5-11: Drop on side from 9m (cold): Bolt Stress Summary

Stress type	Maximum stress (MPa)	Allowable stress intensity (MPa)	Minimum design margin
Average shear	3.79	361	94.2
Average stress	91.0	602	5.62

Table 5-12: Drop on side from 9m (cold): Buckling Evaluation

Stress component	Stress (MPa)	Design Margin
Axial compression	25.0	2.421
Hoop compression	37.6	
In-plane shear	0.27	

5.5 HAC 5: Free drop on corner (hot)

5.5.1 Summary of Pressures and Temperatures

In this case, the package is subject to an ambient temperature of 38°C in still air, with insolation and with maximum decay heat. A thermal analysis has shown that a bounding condition for the containment vessel was at a uniform temperature of 150°C.

This case assumed that the external pressure was 100 kPa. The internal pressure was 800 kPa absolute, so the internal gauge pressure applied to the model was 700 kPa.

A body force was applied to the model which was equivalent to an acceleration of 300g. This was assumed to be the load due to an impact on the top corner from a height of 9 metres. The cork impact limiter was included in this model.

5.5.2 Stress Calculations

Figure 30 shows the stresses for this case. The stress distribution is similar to that for case NCT11, but with a greater magnitude.

5.5.3 Comparison with Allowable Stresses

The stresses in the containment vessel were evaluated at the locations shown in Figure 7. Stress linearization at these locations was carried out using a post-processing option in Abaqus. The stresses were then compared with the allowable stresses given in Table 2-3. A summary of the evaluation is given in Table 5-13. Locations with a name ending "-180" are on the opposite side of the vessel to those shown in Figure 7, i.e. they are on the side of the vessel closest to the impact with the cork impact limiter. The containment vessel satisfies the requirements of Reg. Guide 7.6 as all of the design margins were above zero.

The containment vessel satisfies the requirements of Reg. Guide 7.6 as all of the design margins were above zero.

The stresses in the bolts are summarised in Table 5-14. The bolts satisfy the requirements of Reg. Guide 7.6 as all of the design margins were above zero.

The buckling evaluation is summarised in Table 5-15. The containment vessel satisfies the requirements of Reg. Guide 7.6 for buckling.

Table 5-13: Drop on corner from 9m (hot): Containment Vessel Stress Summary

Stress type	Maximum stress intensity (MPa)	Stress location	Allowable stress intensity (MPa)	Minimum design margin
P_m	105	C9-180	276	1.63
$P_m + P_b$	172	C13-180	414	1.40

Table 5-14: Drop on corner from 9m (hot): Bolt Stress Summary

Stress type	Maximum stress (MPa)	Allowable stress intensity (MPa)	Minimum design margin
Average shear	14.1	361	24.6
Average stress	154	602	2.90

Table 5-15: Drop on corner from 9m (hot): Buckling Evaluation

Stress component	Stress (MPa)	Design Margin
Axial compression	8.11	11.1
Hoop compression	0 (1)	
In-plane shear	0.90	

1. If the calculated stress from the FEA is tensile then it is assumed to be zero for the buckling calculation.

5.6 HAC 6: Free drop on corner (cold)

In this case, the package is subject to an ambient temperature of -29°C in still air, zero insolation and with zero decay heat.

This case assumed that the external pressure was 100 kPa. The internal pressure was 0 kPa absolute, so the internal gauge pressure applied to the model was -100 kPa.

A body force was applied to the model which was equivalent to an acceleration of 300g. This was assumed to be the load due to an impact on the top corner from a height of 9 metres. The cork impact limiter was included in this model.

5.6.1 Stress Calculation

Figure 31 shows the stress intensity for this case. The stress distribution is similar to that for case NCT12, but with a greater magnitude.

5.6.2 Comparison with Allowable Stresses

The stresses in the containment vessel were evaluated at the locations shown in Figure 7. Stress linearization at these locations was carried out using a post-processing option in Abaqus. The stresses were then compared with the allowable stresses given in Table 2-3. A summary of the evaluation is given in Table 5-16. Locations with a name ending "-180" are on the opposite side of the vessel to those shown in Figure 7, i.e. they are on the side of the vessel closest to the impact with the cork impact limiter. The containment vessel satisfies the requirements of Reg. Guide 7.6 as all of the design margins were above zero.

The stresses in the bolts are summarised in Table 5-17. The bolts satisfy the requirements of Reg. Guide 7.6 as all of the design margins were above zero.

The buckling evaluation is summarised in Table 5-18. The containment vessel satisfies the requirements of Reg. Guide 7.6 for buckling.

Table 5-16: Drop on corner from 9m (cold): Containment Vessel Stress Summary

Stress type	Maximum stress intensity (MPa)	Stress location	Allowable stress intensity (MPa)	Minimum design margin
P_m	79.5	C6-180	276	2.47
$P_m + P_b$	156	C7-180	414	1.66

Table 5-17: Drop on corner from 9m (cold): Bolt Stress Summary

Stress type	Maximum stress (MPa)	Allowable stress intensity (MPa)	Minimum design margin
Average shear	8.32	361	42.4
Average stress	88.3	602	5.82

Table 5-18: Drop on corner from 9m (cold): Buckling Evaluation

Stress component	Stress (MPa)	Design Margin
Axial compression	43.2	2.52
Hoop compression	37.0	
In-plane shear	0.09	

6.0 Conclusions

The Safkeg LS containment vessel has been evaluated using finite element analysis for 12 Normal Conditions of Transport and 6 Hypothetical Accident Conditions. Assessments of the stresses were made against Regulatory Guide 7.6. The containment vessel has satisfied the requirements of Regulatory Guide 7.6 in all cases analysed in that the margin of safety is satisfactory for all load combinations

7.0 References

1. "Containment Vessel LS Body Construction", Drg. No. 1C-6099 Issue A, Croft Associates Ltd, 2009.
2. "Containment Vessel LS Lid Construction", Drg. No. 1C-6097 Issue A, Croft Associates Ltd, 2009.
3. "LS-12x65-Tu Insert Assy Design No. 3984", Drg. No. 2C-5888 Issue A, Croft Associates Ltd, 2009.
4. "Safkeg LS Construction", Drg. No. 0C-6049 Issue A, Croft Associates Ltd, 2009.
5. Hutchinson, P, " Compression Testing of Cork", PO5607TC, Serco, 2008.
6. "Abaqus/Standard v6.8 User's Manual", Dassault Systèmes, 2008.
7. "Abaqus/CAE v6.8 User's Manual", Dassault Systèmes, 2008.
8. E-mail from Bob Vaughan, Croft Associates to Gareth Jones, Vectra Group, "LS FEA work", 9th October 08.
9. "Regulatory Guide 7.8, Load Combinations for the Structural Analysis of Shipping Casks for Radioactive Material", Revision 1, U.S. Nuclear Regulatory Commission, March 1989.
10. "Regulatory Guide 7.6, Design Criteria for the Structural Analysis of Shipping Casks for Radioactive Material", Revision 1, U.S. Nuclear Regulatory Commission, March 1978.
11. "American Society of Mechanical Engineers (ASME) Boiler and Pressure Vessel Code", 2007.
12. Brandes, E.A., Brook, G.B (eds.), "Smithells Metals Reference Book", seventh edition, 1992.

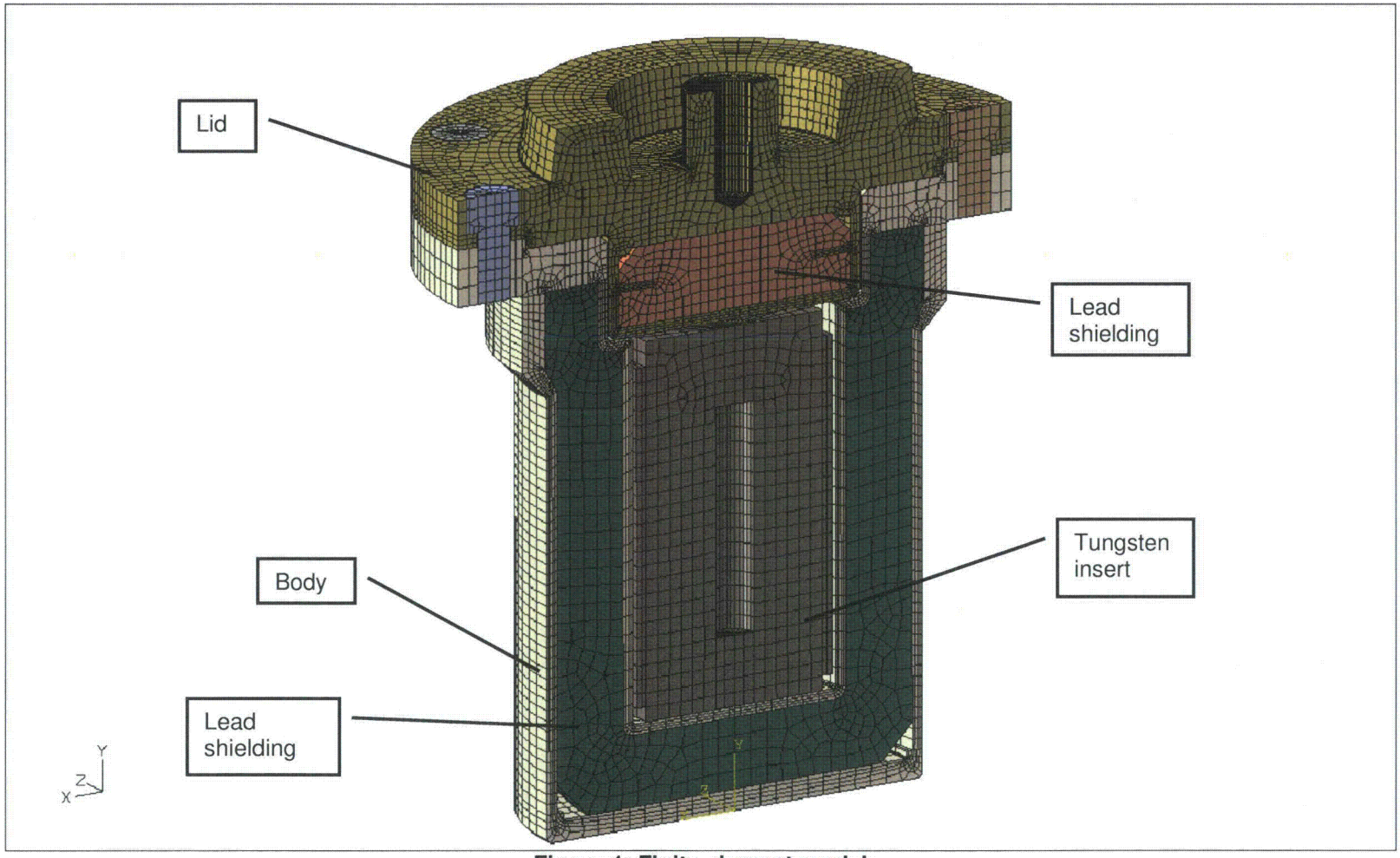

Figure 1: Finite element model

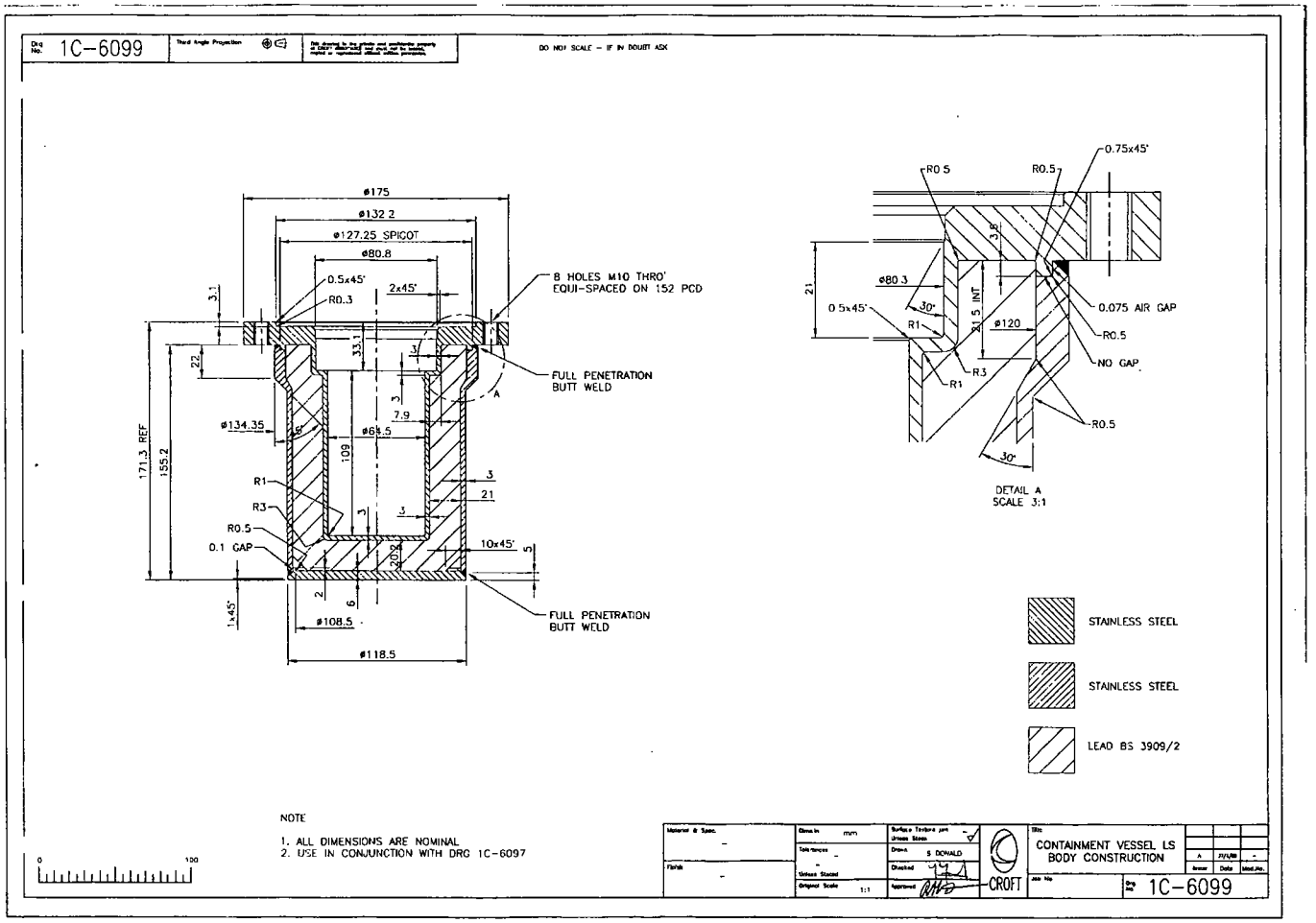

Figure 2: Drawing of LS Containment Vessel Body Construction

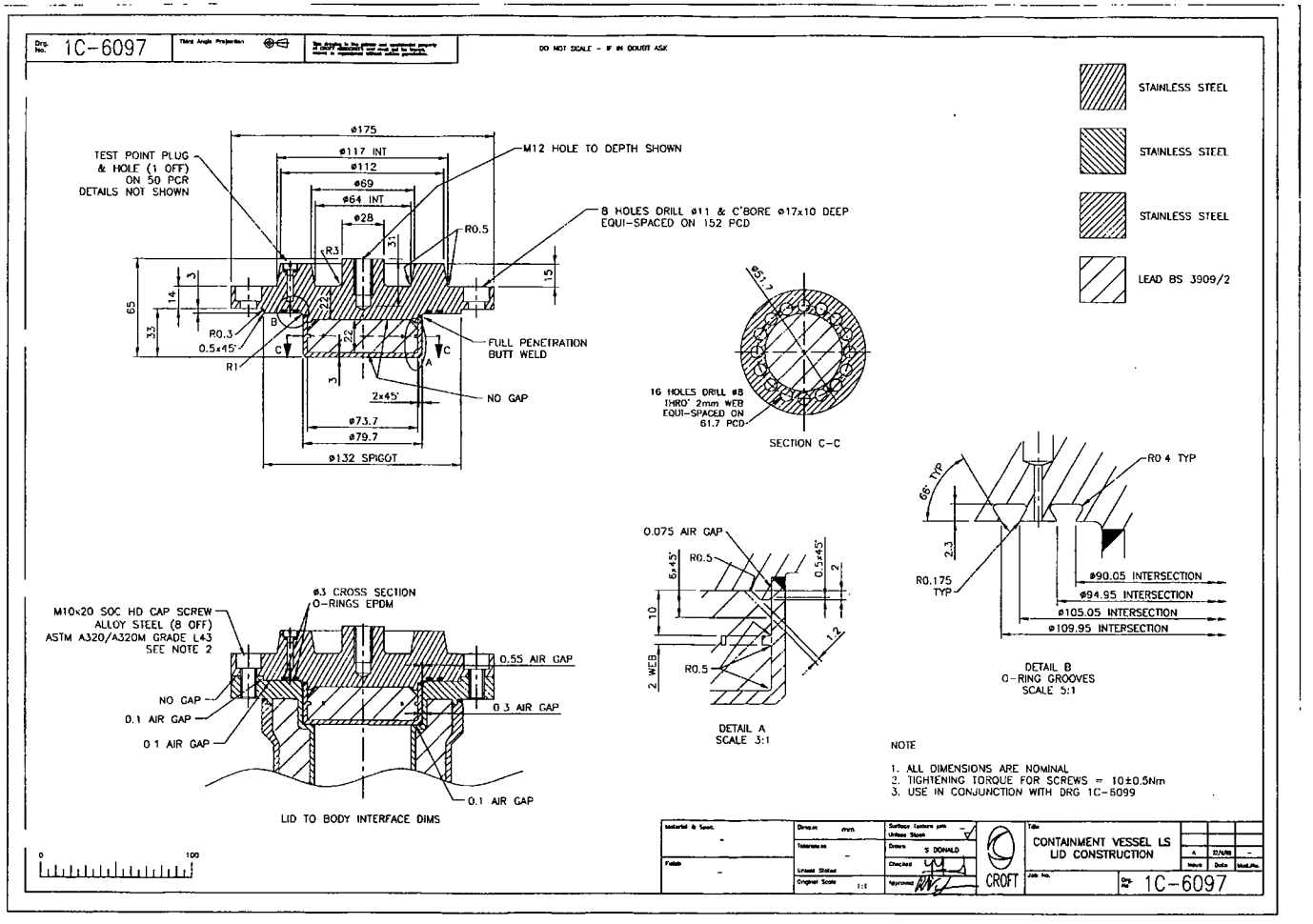

Figure 3: Drawing of LS Containment Vessel Lid Construction

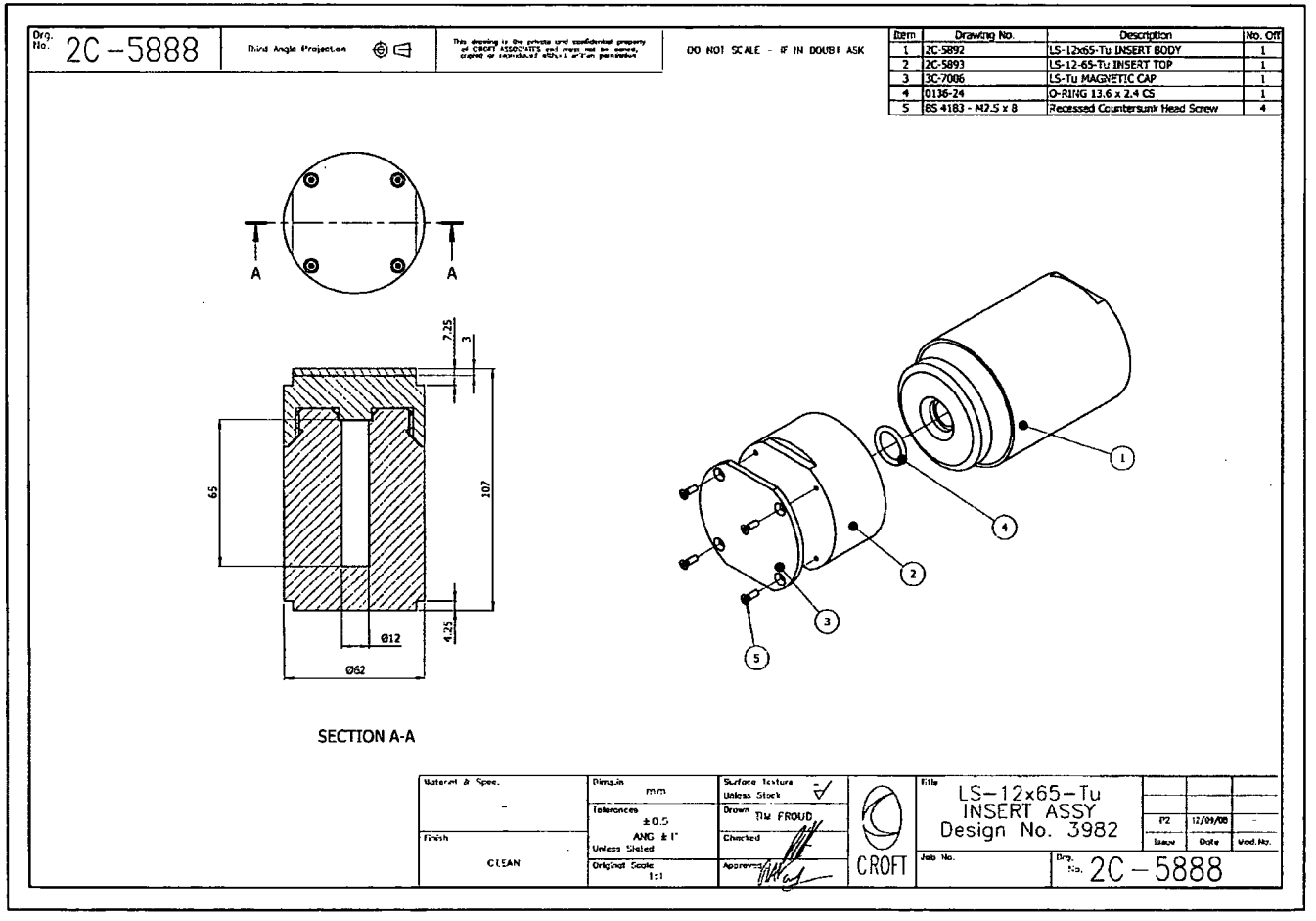

Figure 4: Drawing of Insert Assembly

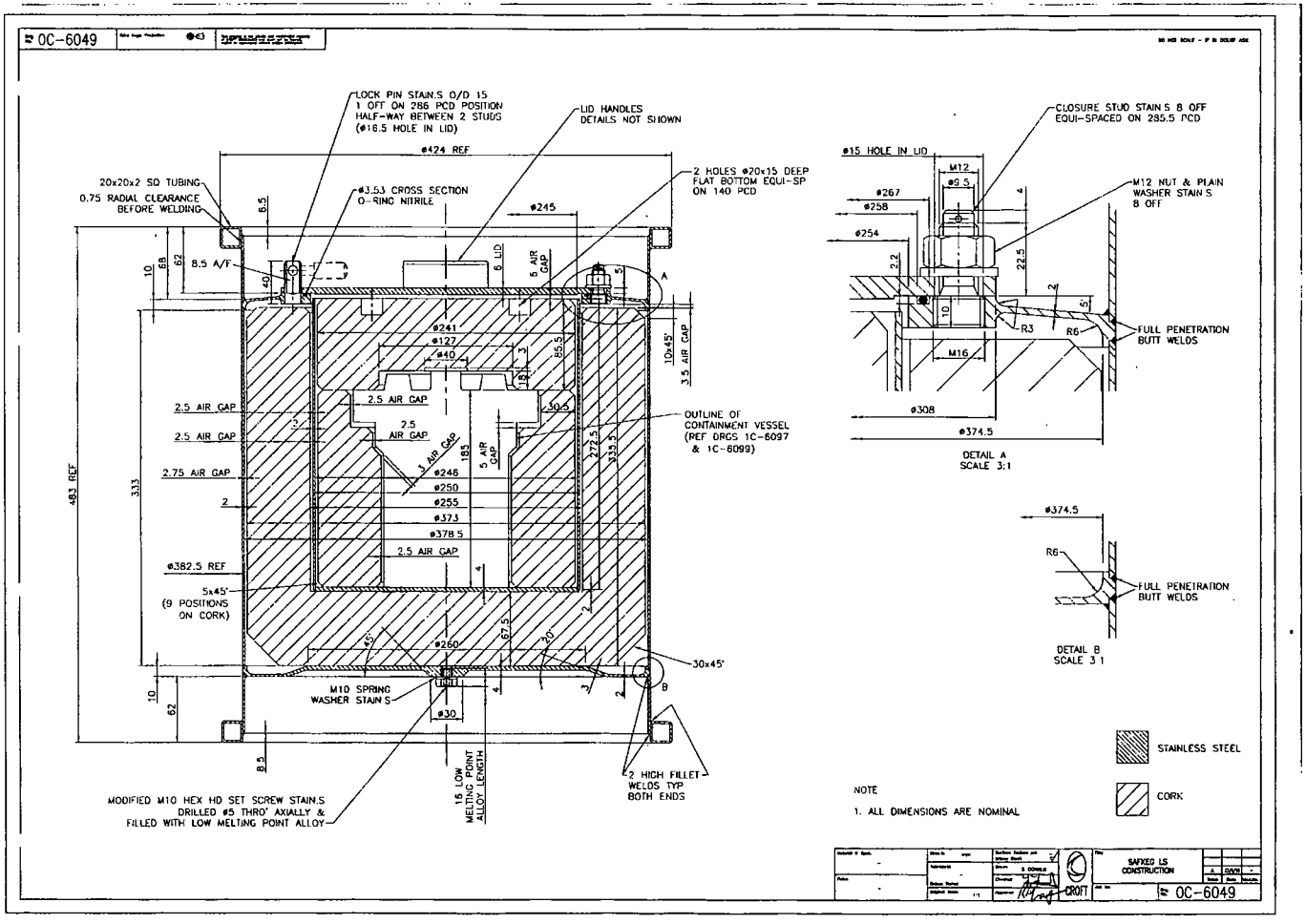

Figure 5: Drawing of Safkeg LS Keg Construction

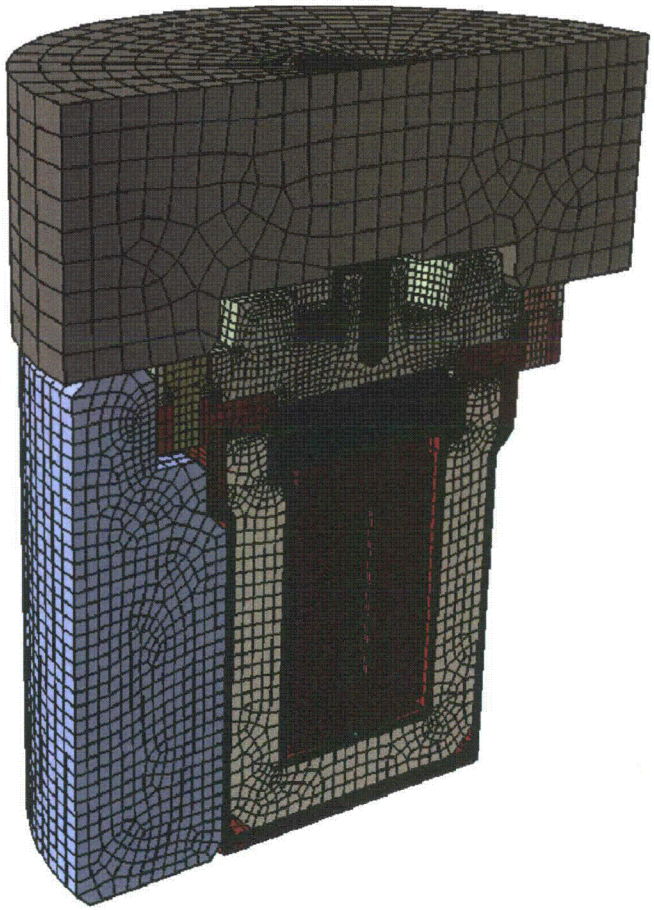

Figure 6: Finite element model with cork impact limiters

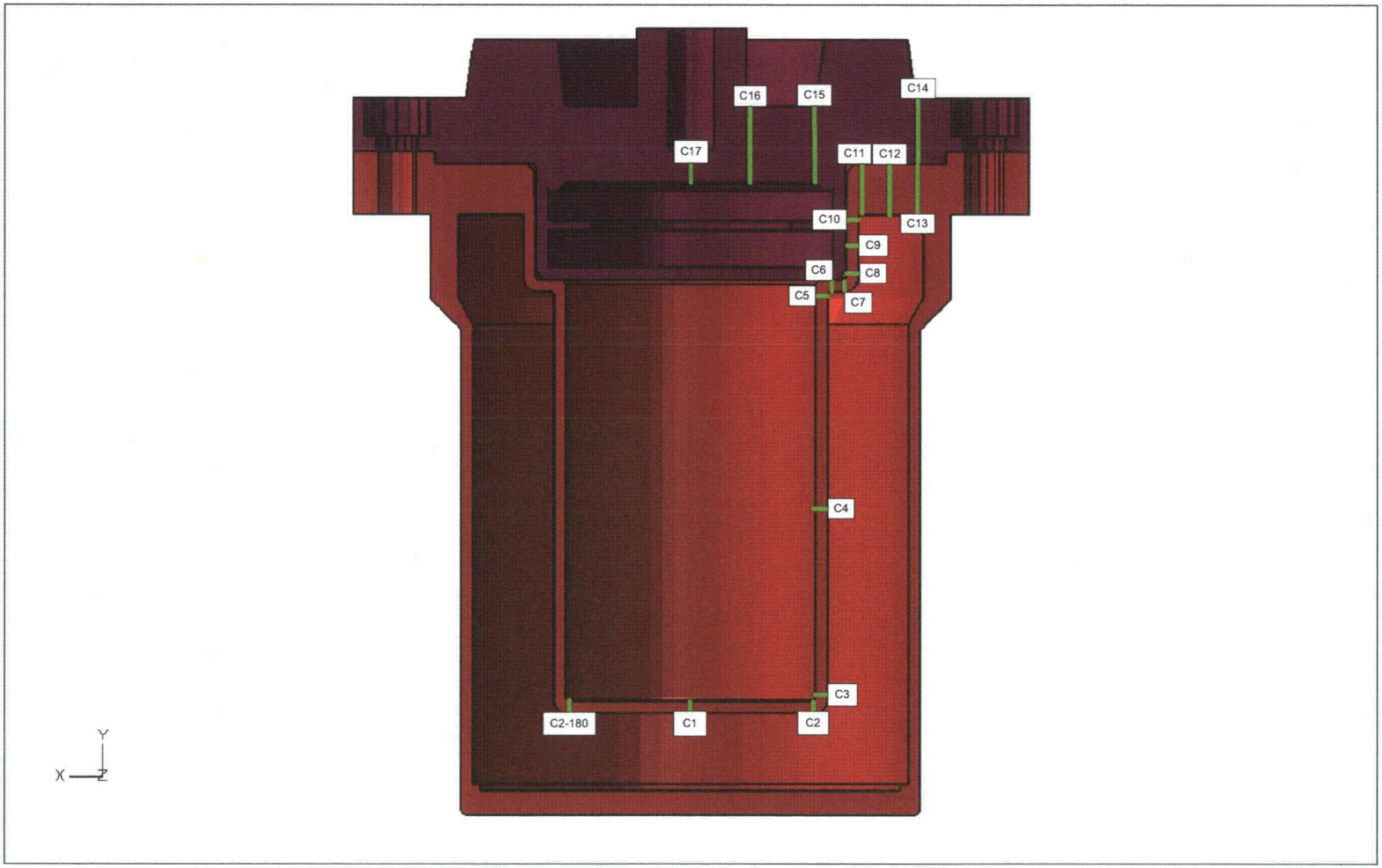

Figure 7: Stress evaluation locations

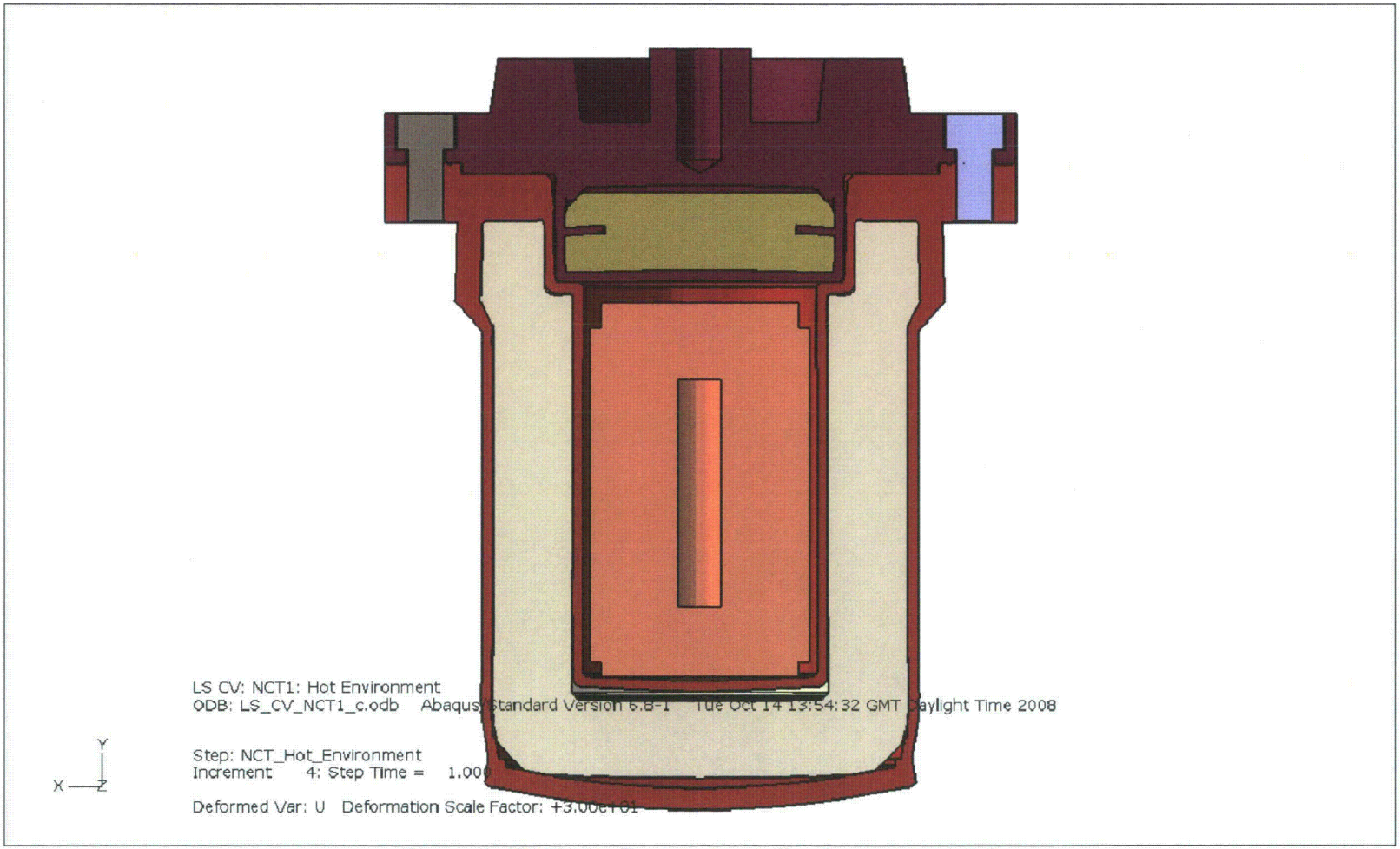

Figure 8: NCT1 Hot Environment: Displacements (x30)

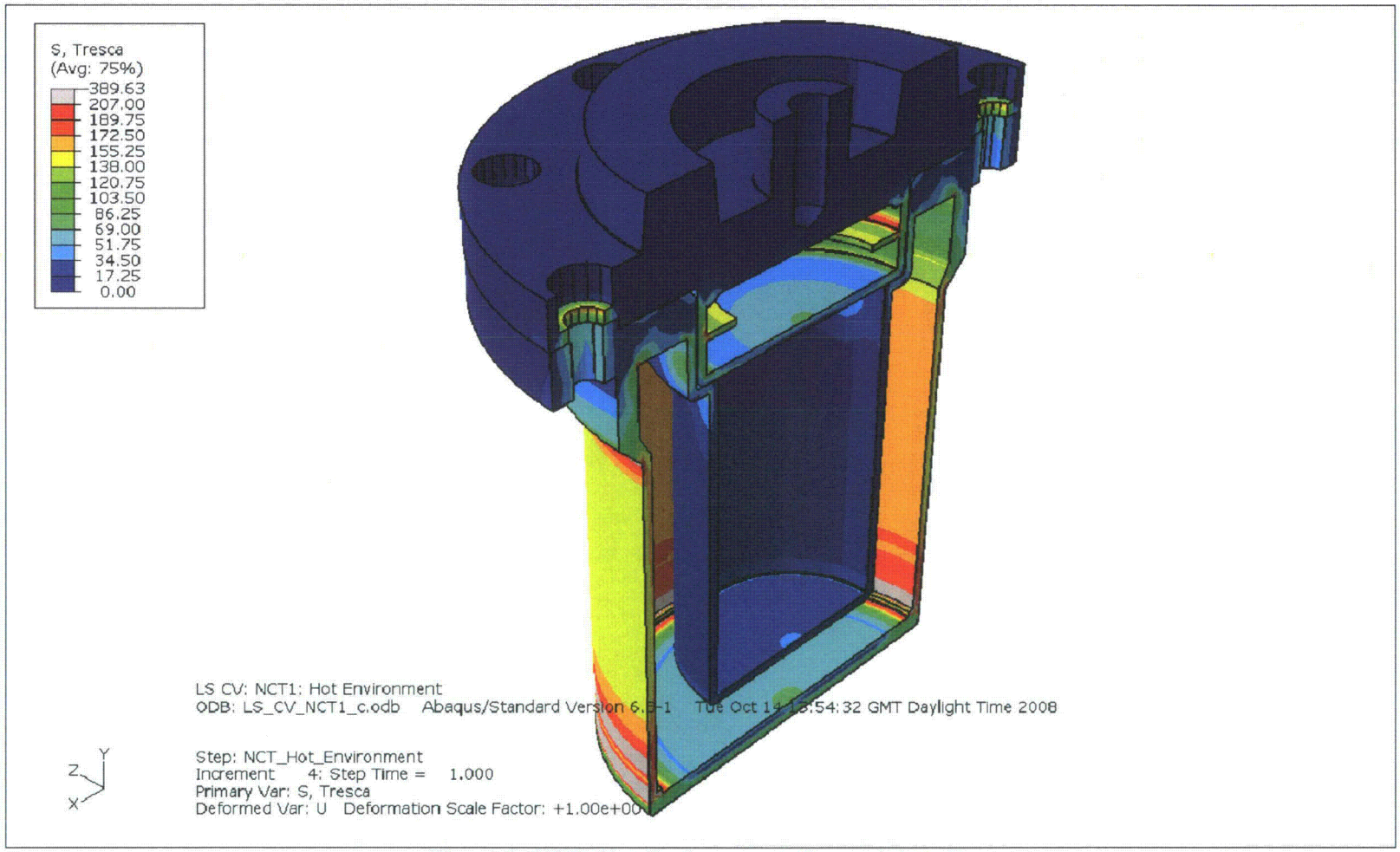

Figure 9: NCT1 Hot Environment: Stress intensity

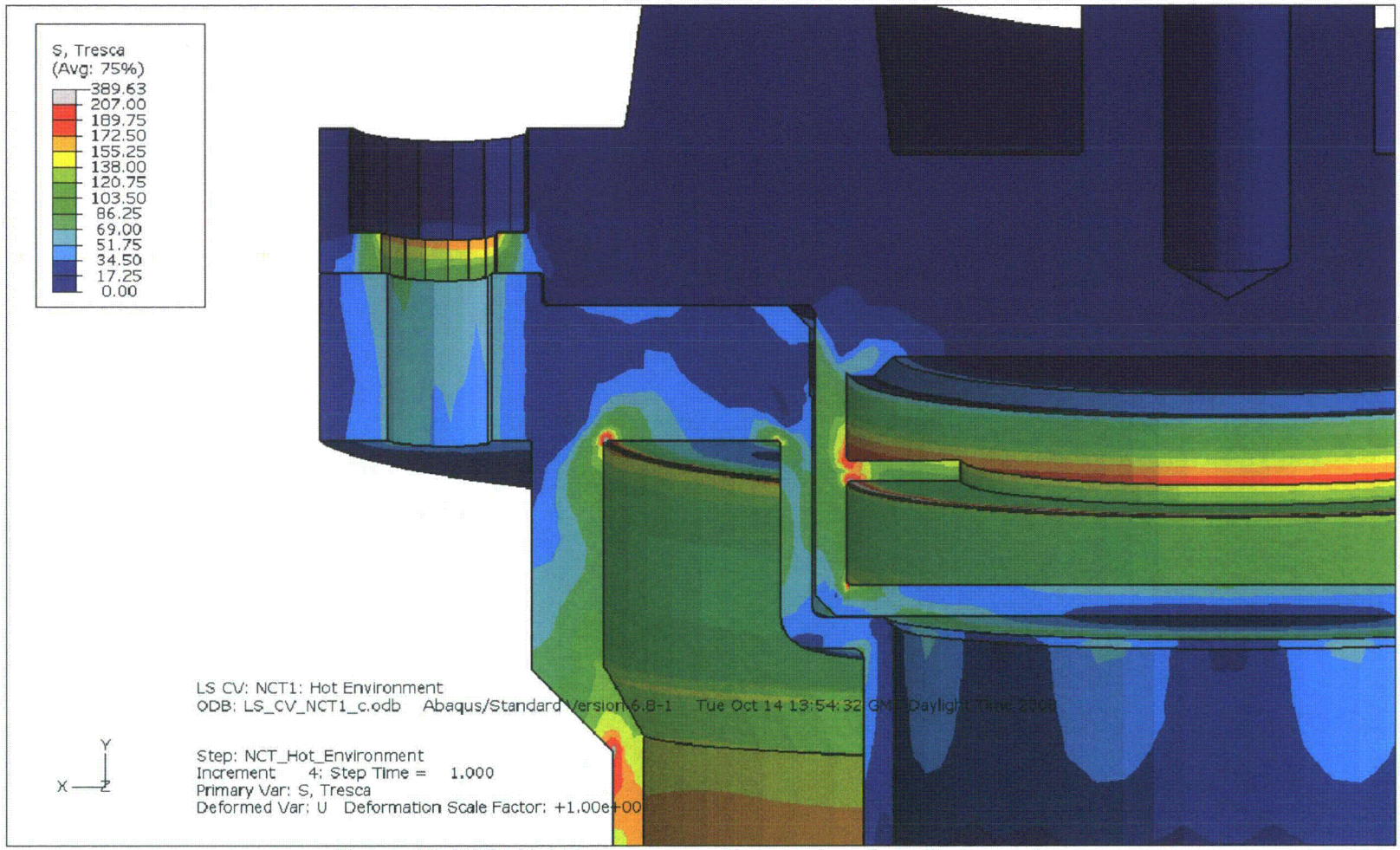

Figure 10: NCT1 Hot Environment: Stress intensity in flange region

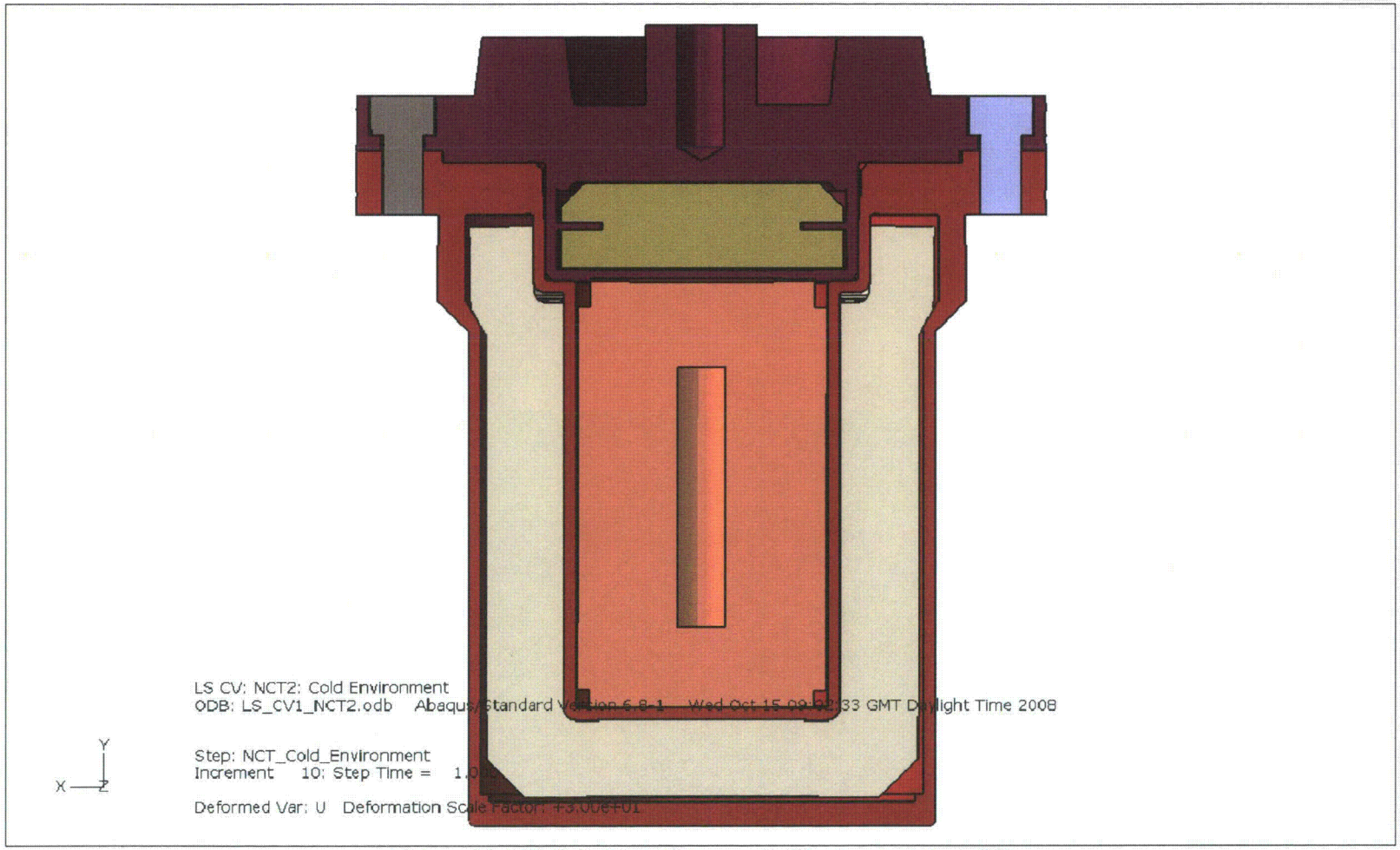

Figure 11: NCT2 Cold Environment: Displacements (x30)

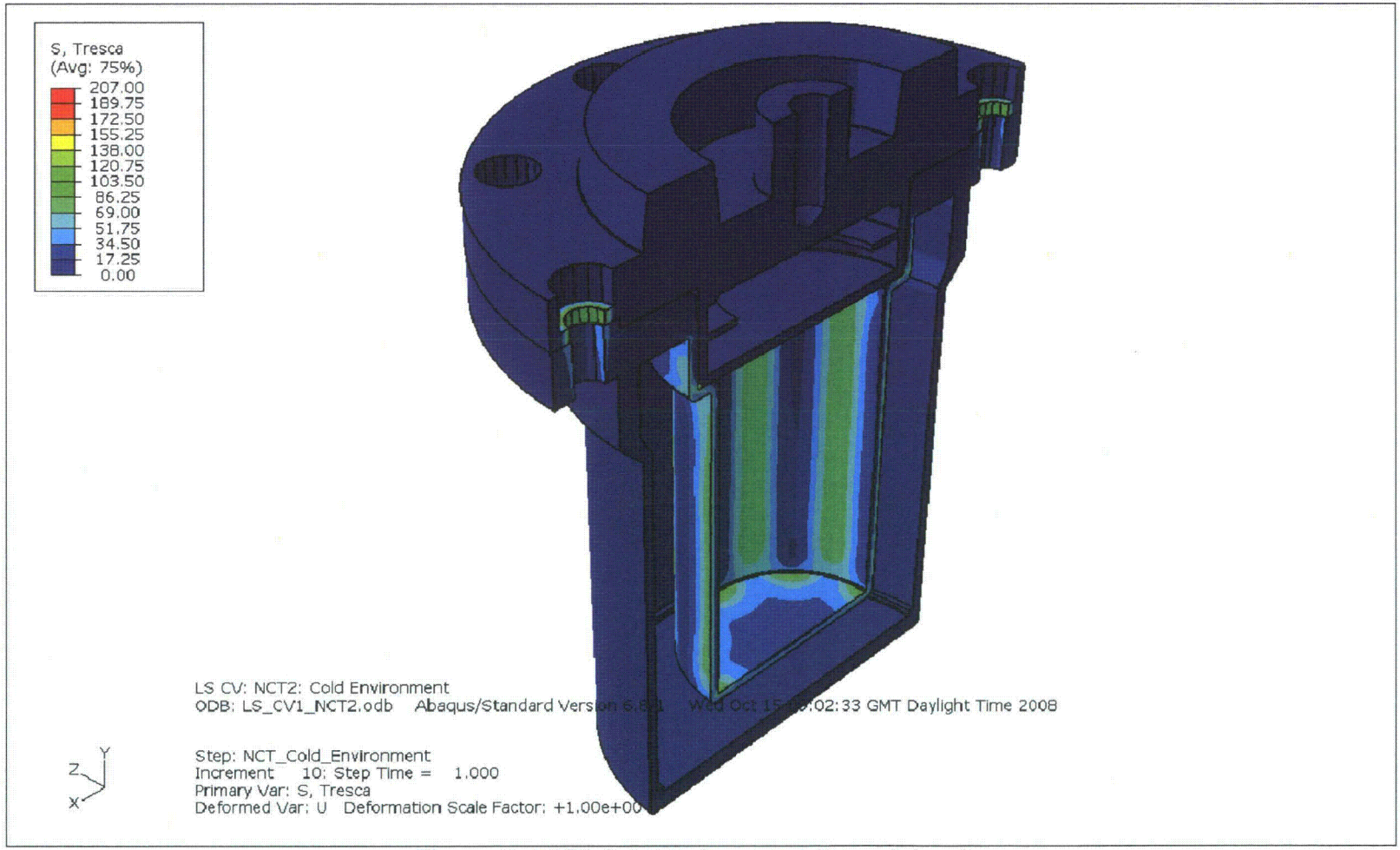

Figure 12: NCT2 Cold Environment: Stress intensity

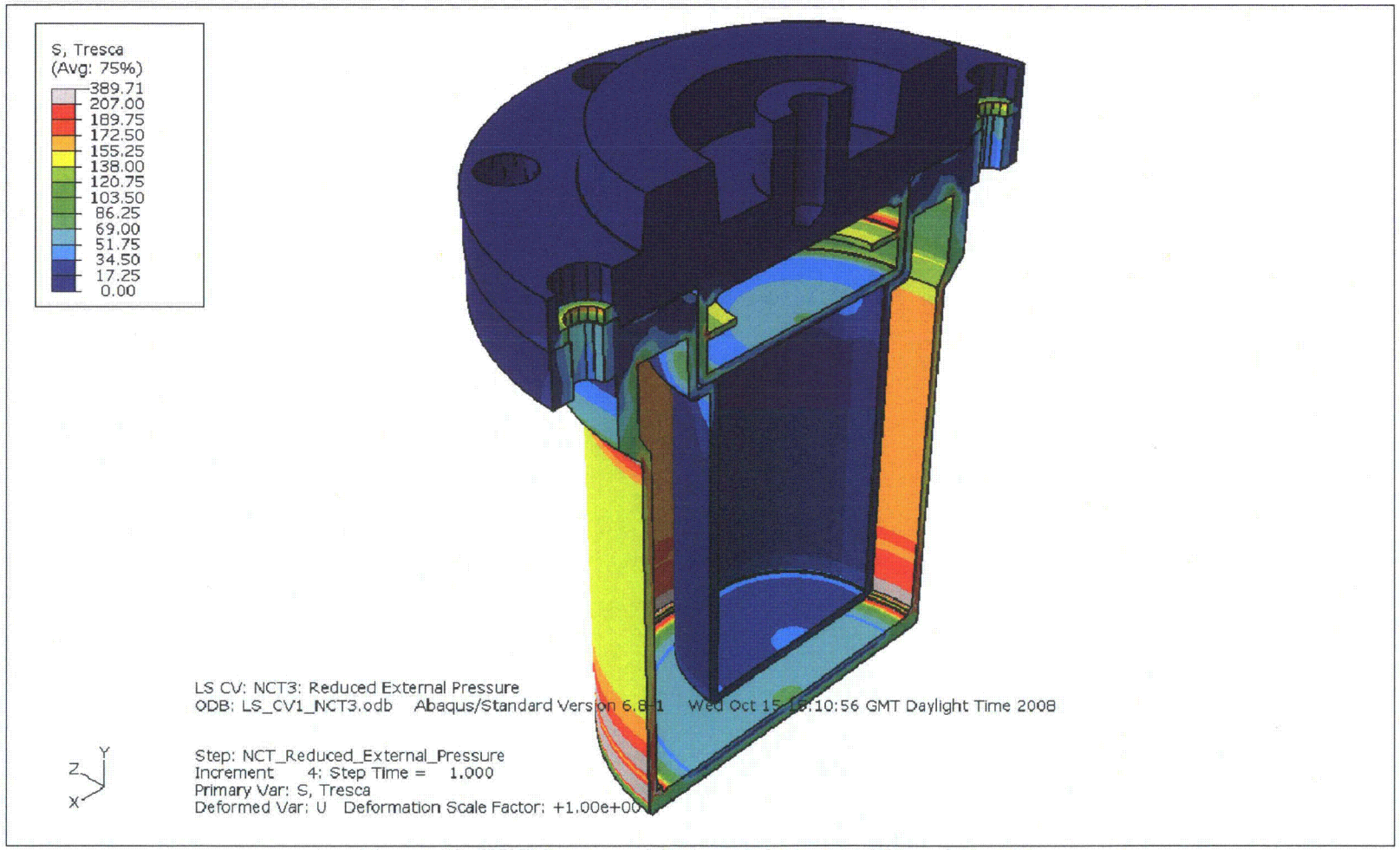

Figure 13: NCT3 Increased External Pressure: Stress intensity

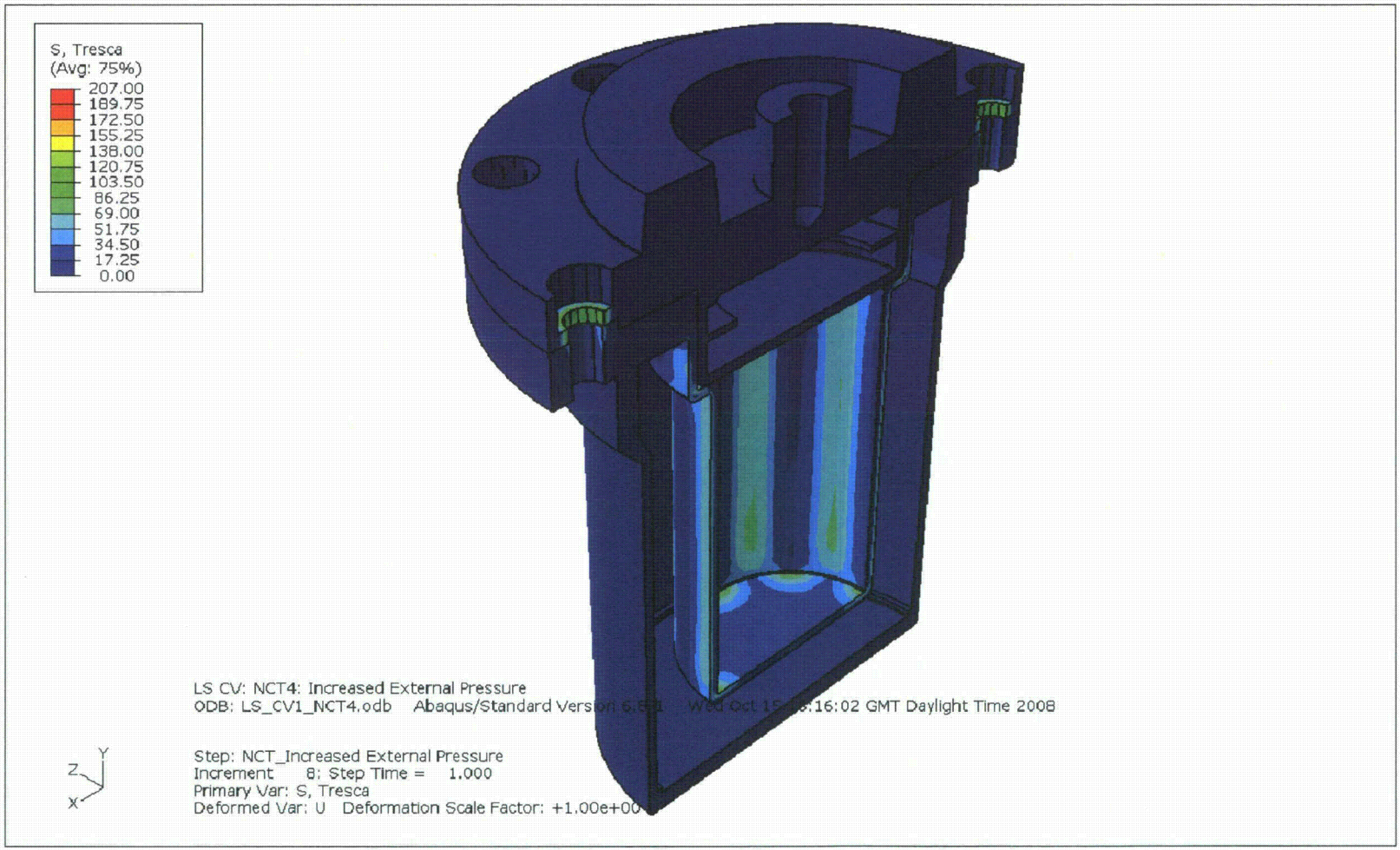

Figure 14: NCT4 Reduced External Pressure: Stress Intensity

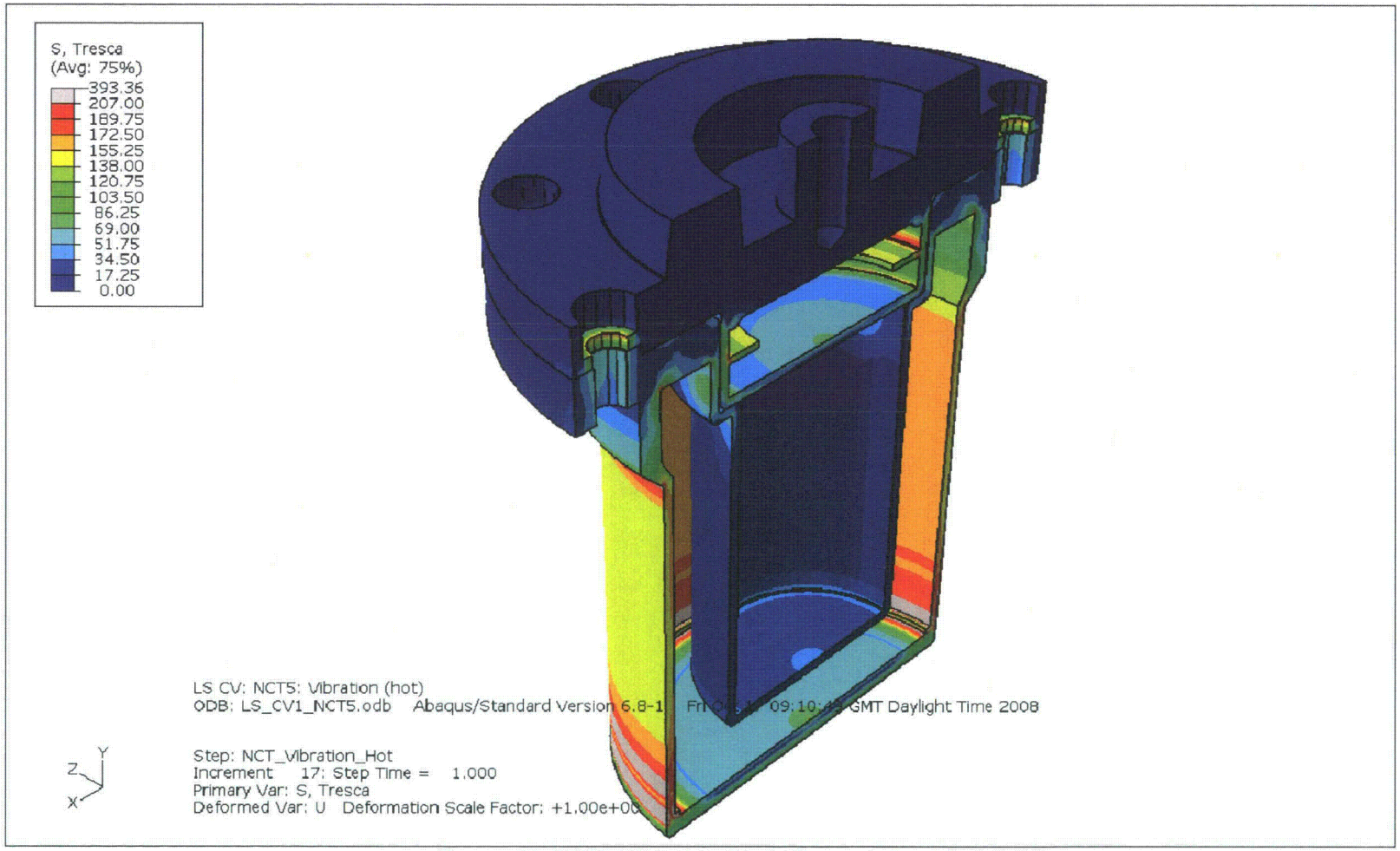

Figure 15: NCT5 Vibration (hot): Stress intensity

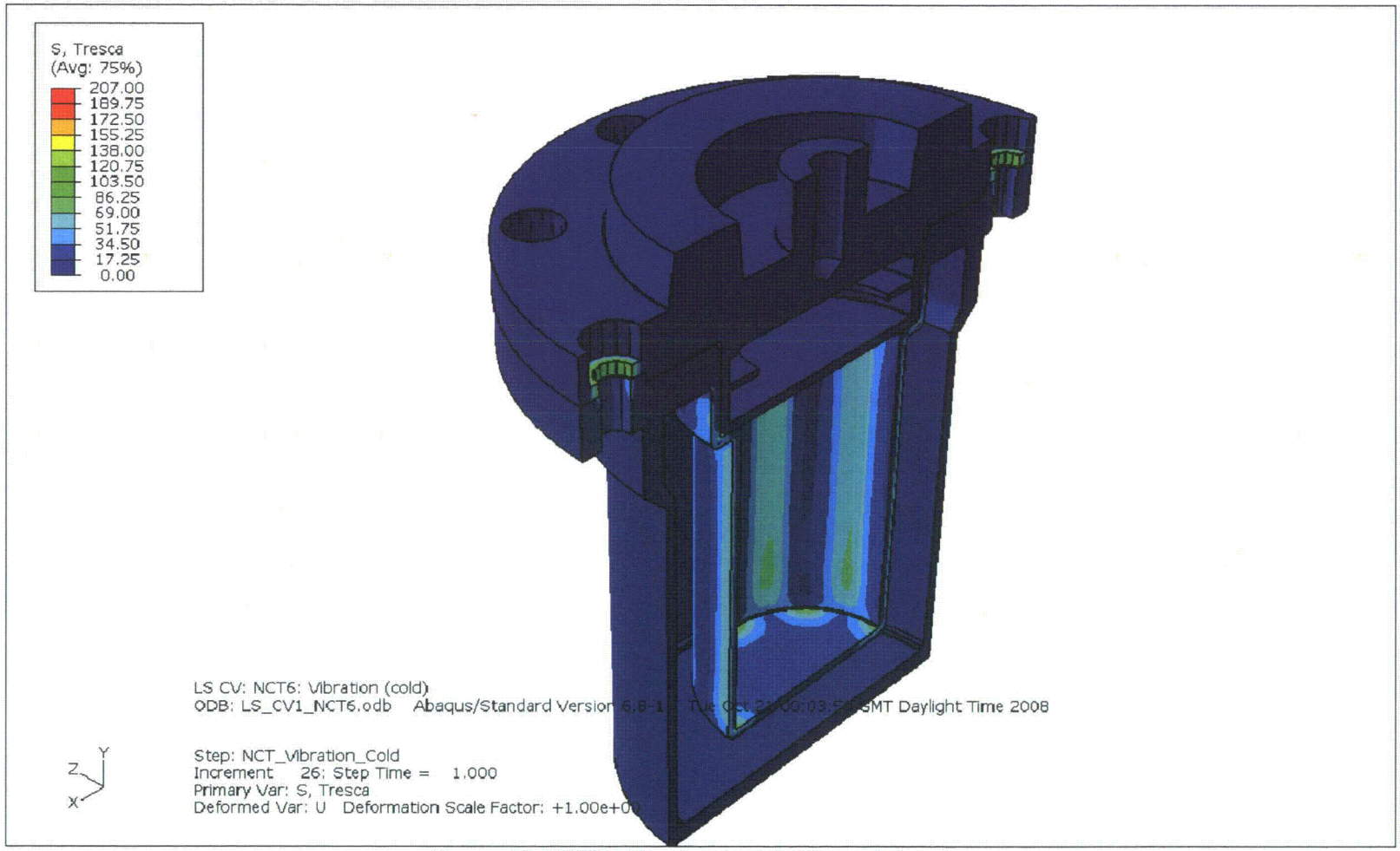

Figure 16: NCT6 Vibration (cold): Stress intensity

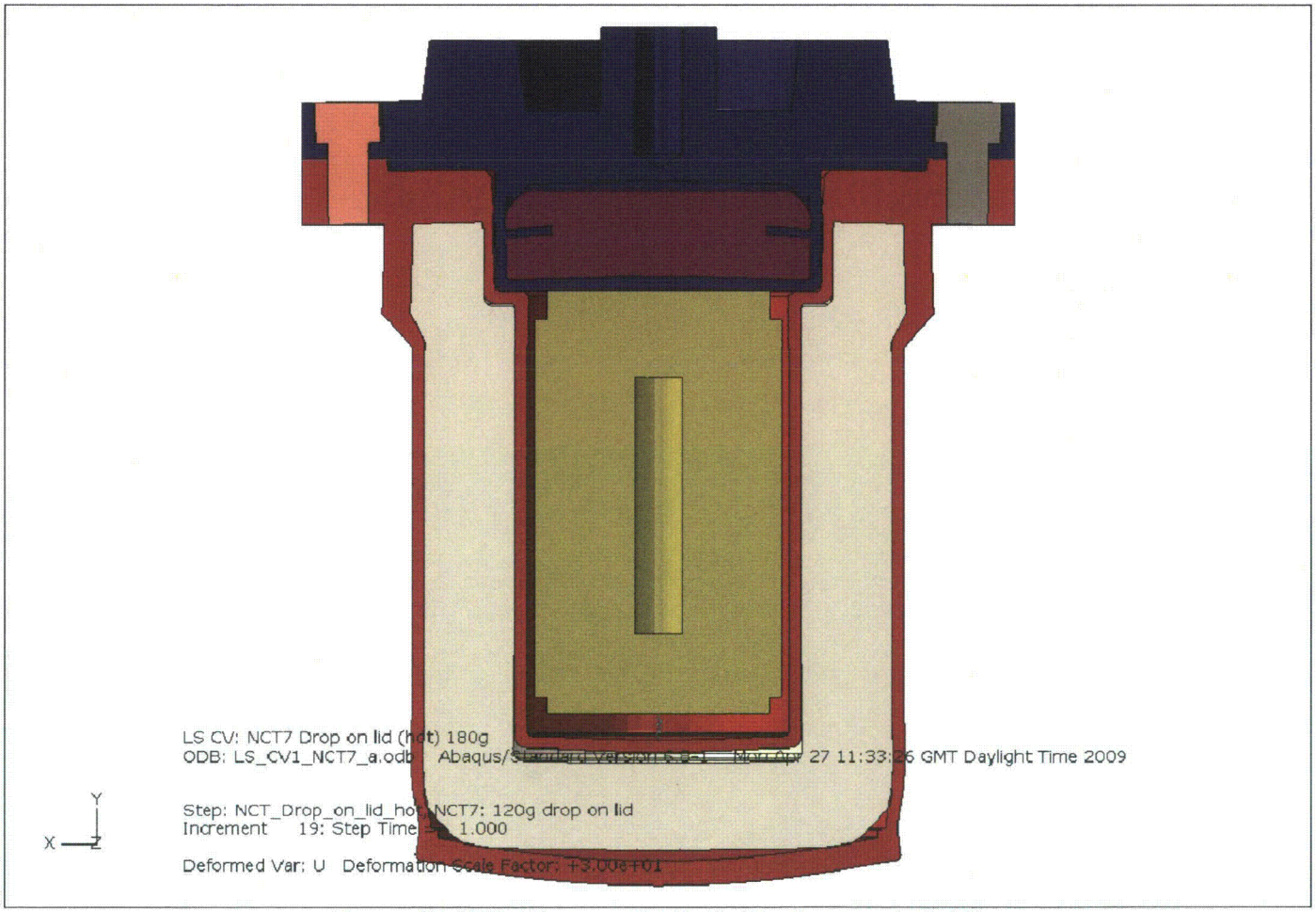

Figure 17: NCT7 Drop on lid (hot): Displacements (x30)

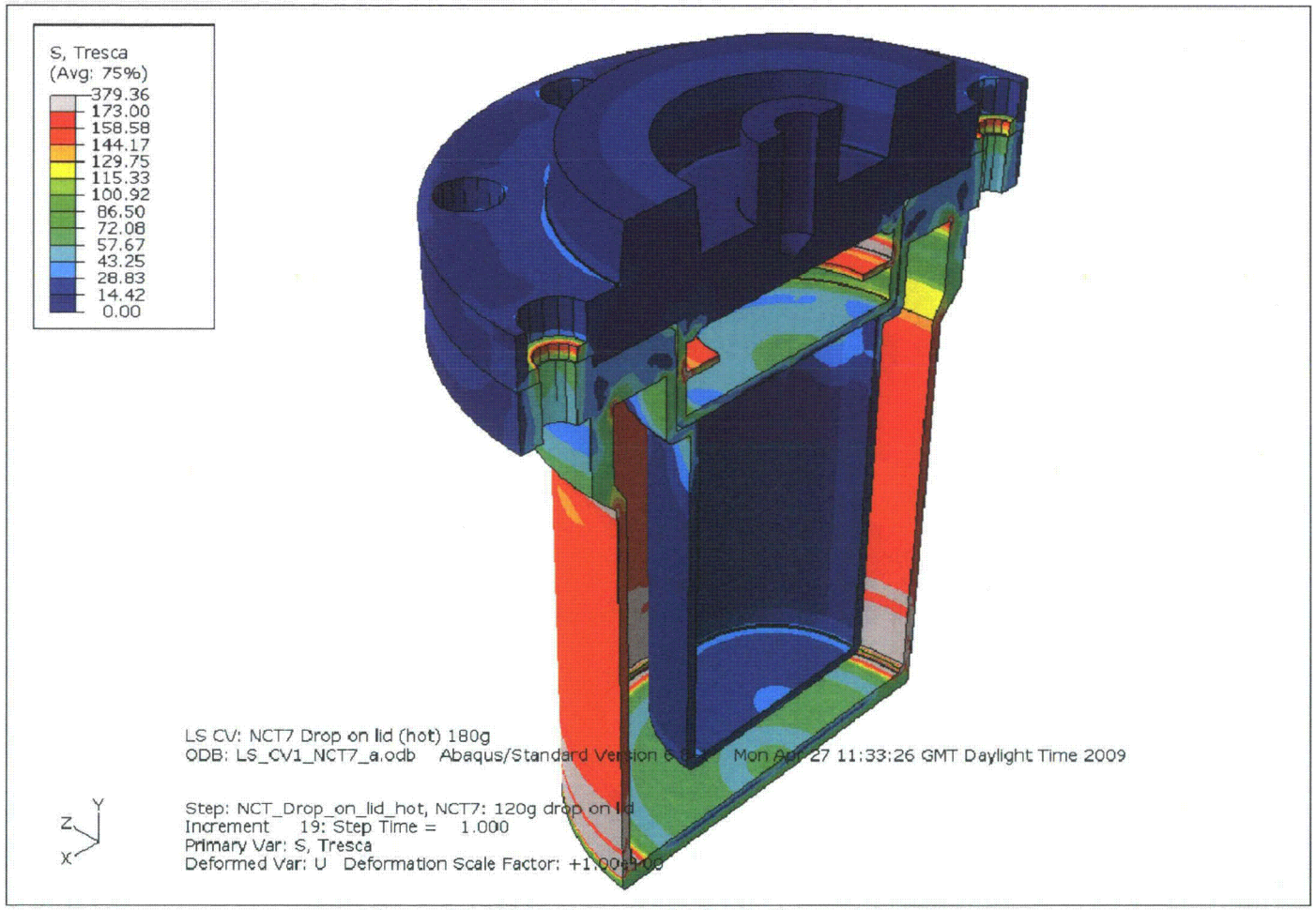

Figure 18: NCT7 Drop on lid (hot): Stress intensity

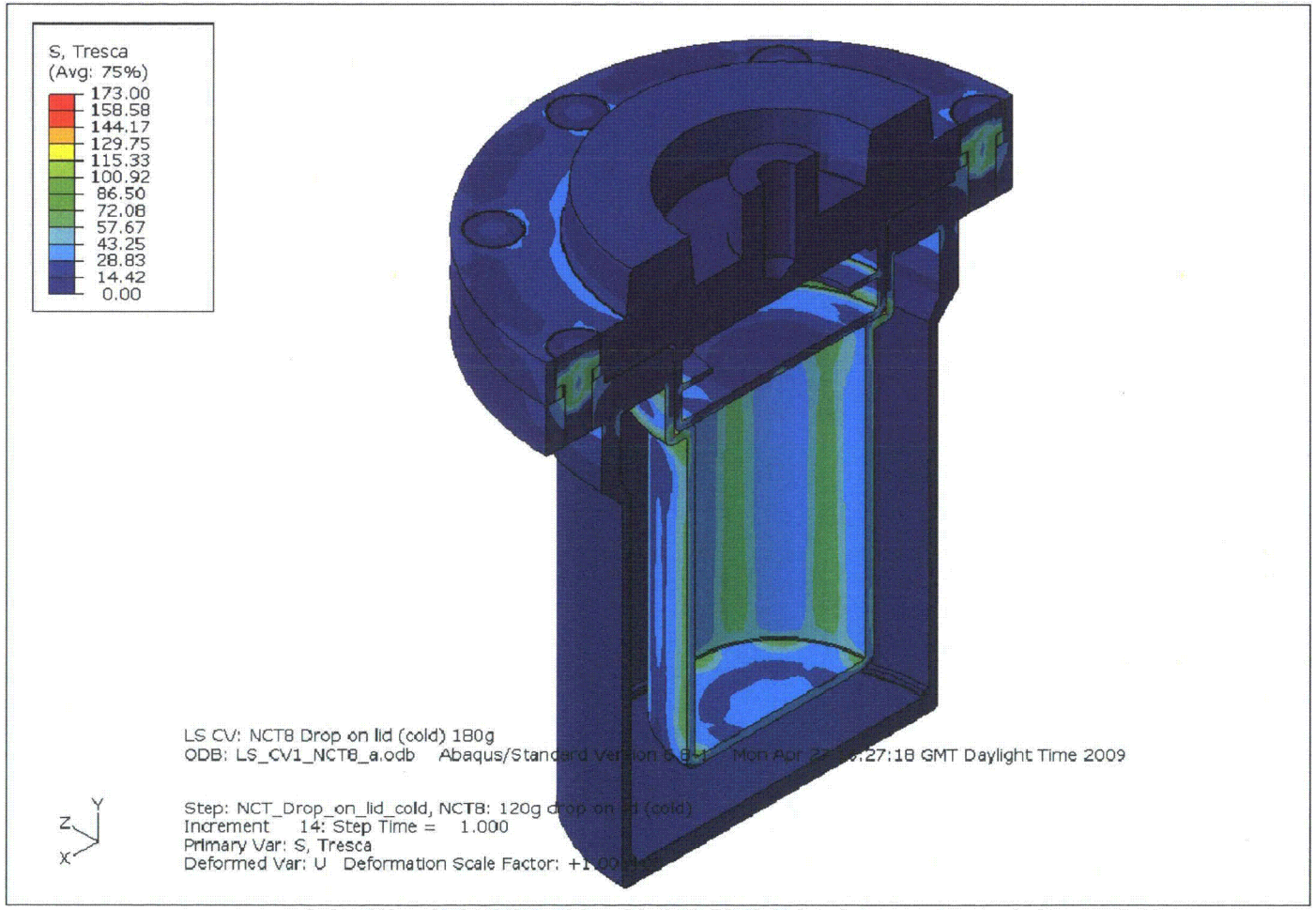

Figure 19: NCT8 Drop on lid (cold): Stress intensity

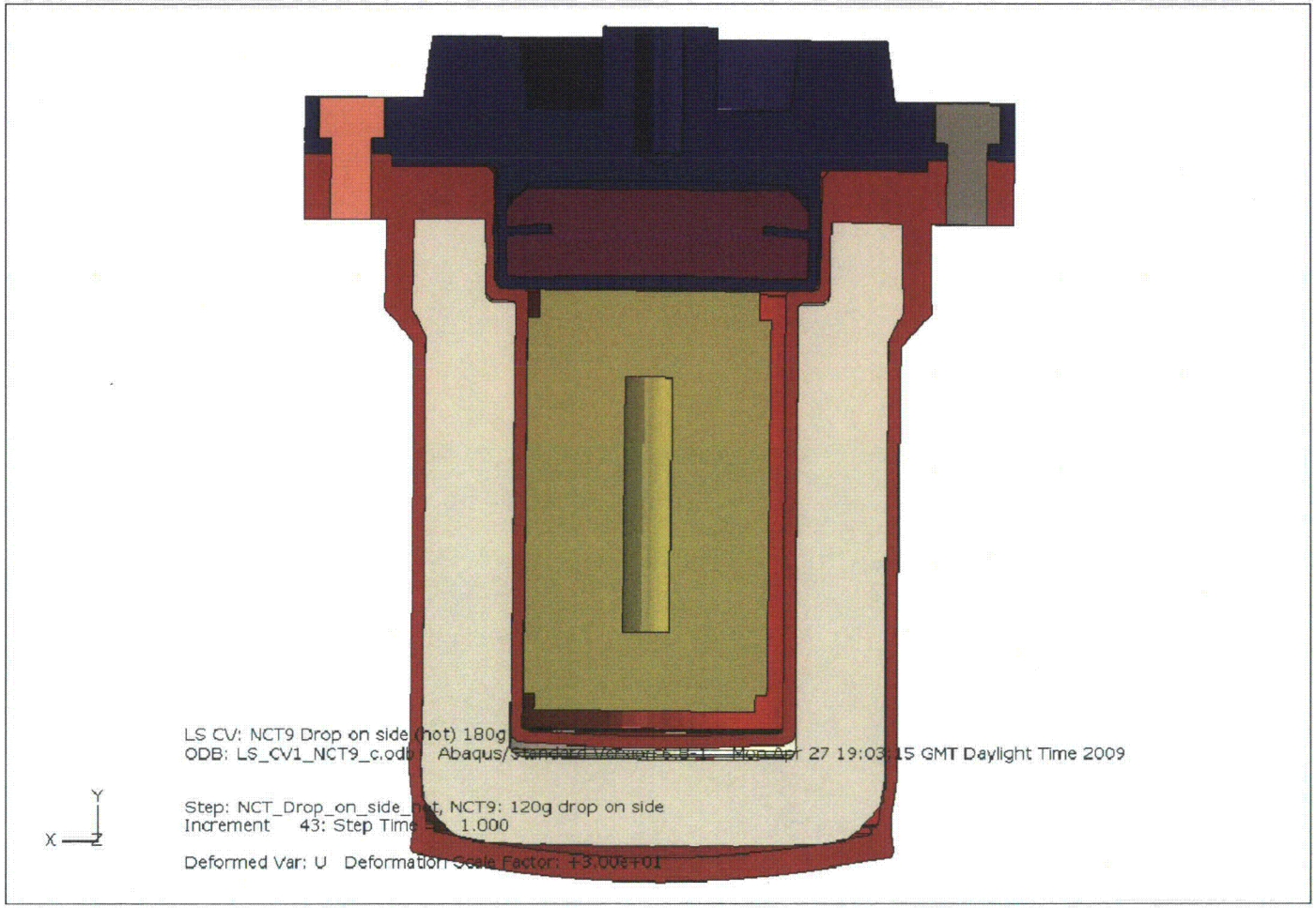

Figure 20: NCT9 Drop on side (hot): Displacements (x30)

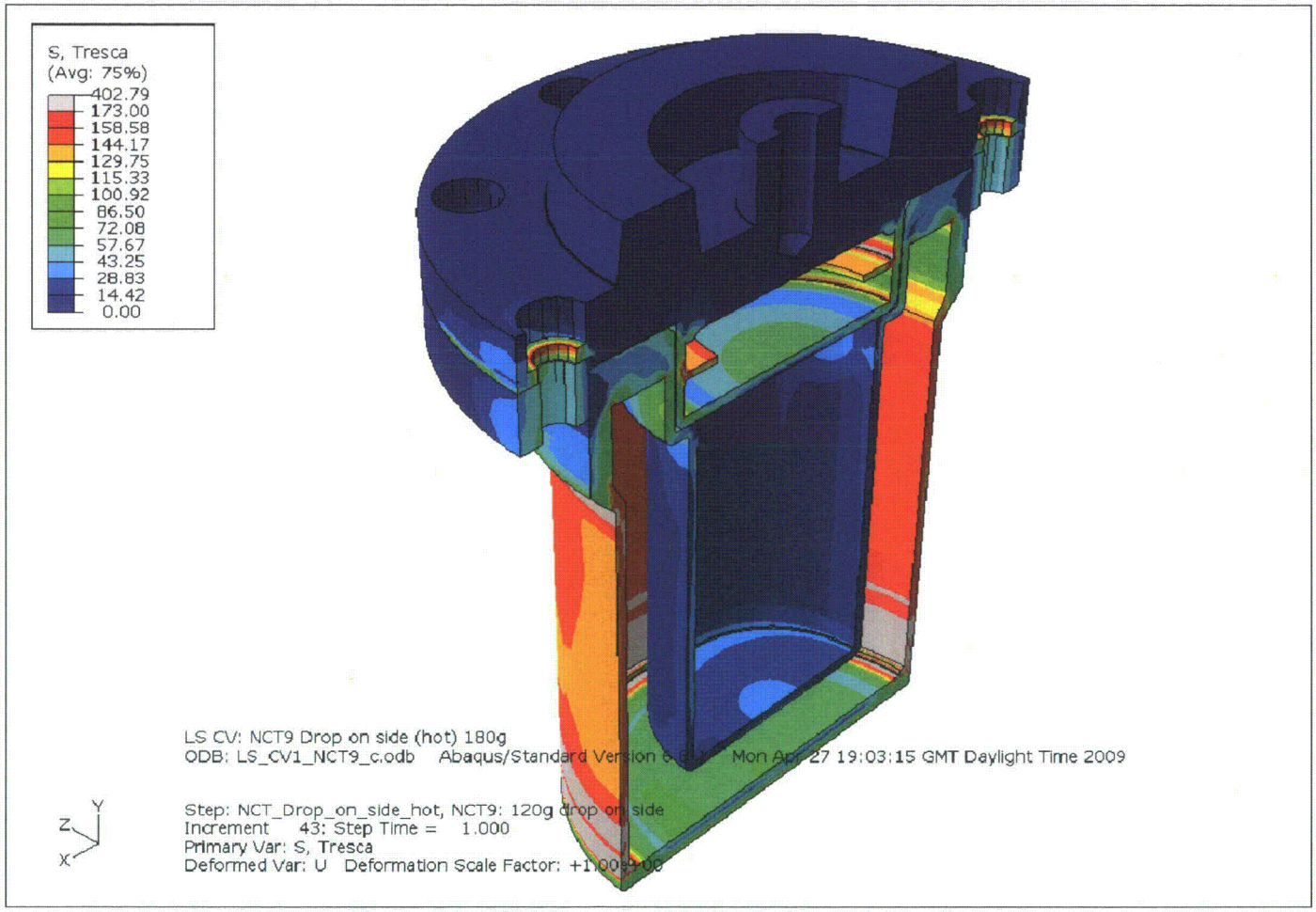

Figure 21: NCT9 Drop on side (hot): Stress intensity

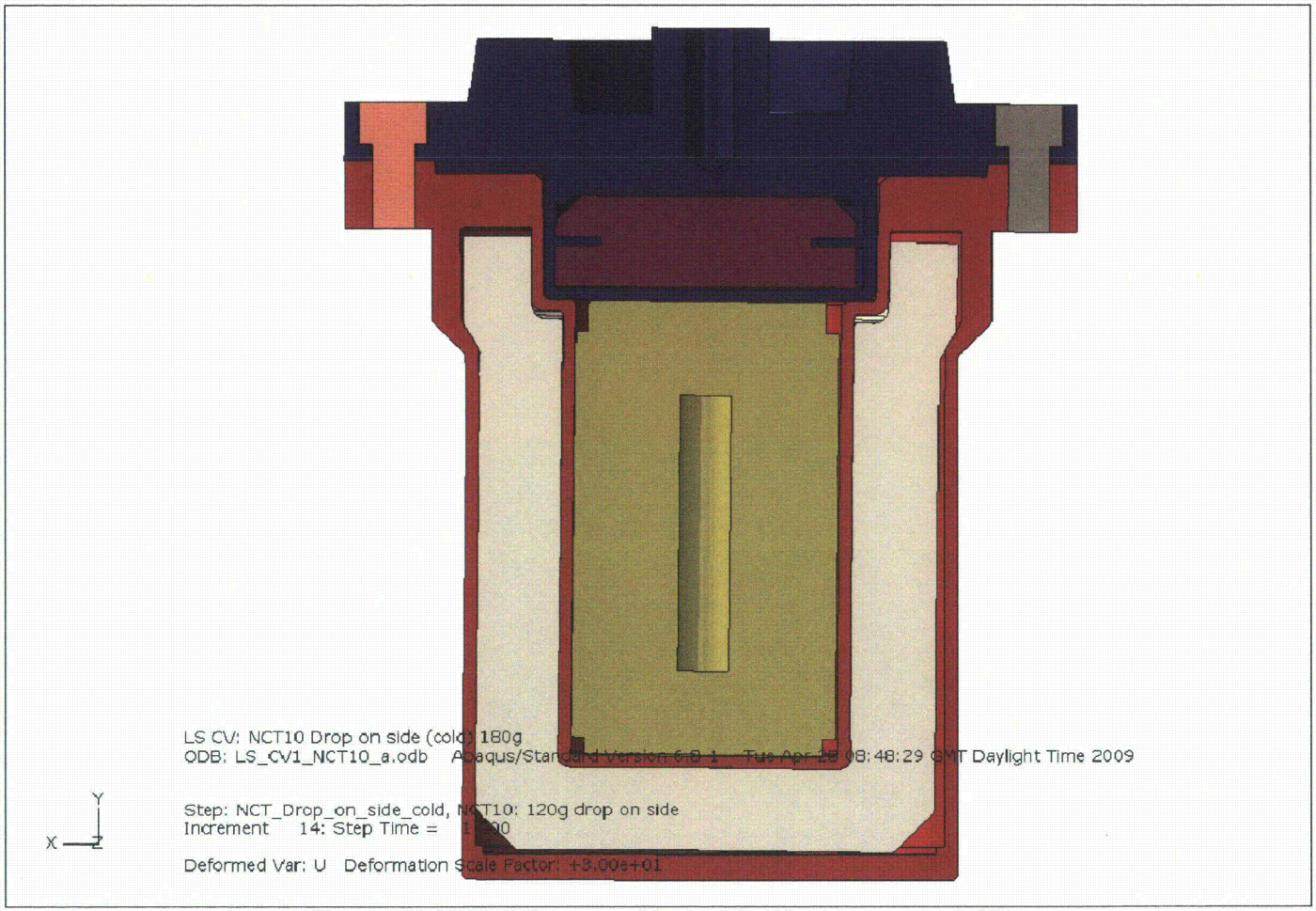

Figure 22: NCT10 Drop on side (cold): Displacements (x30)

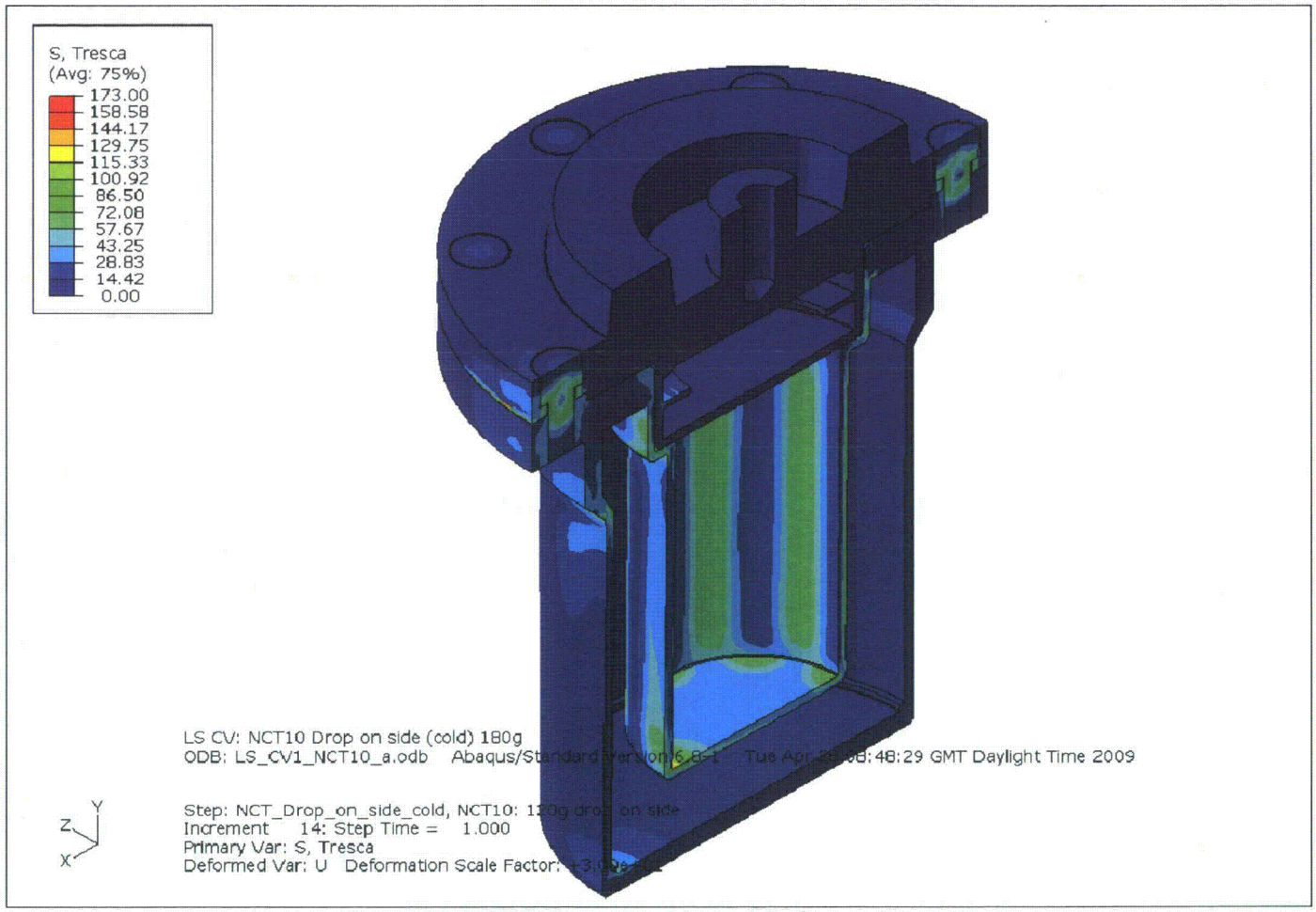

Figure 23: NCT10 Drop on side (cold): Stress intensity

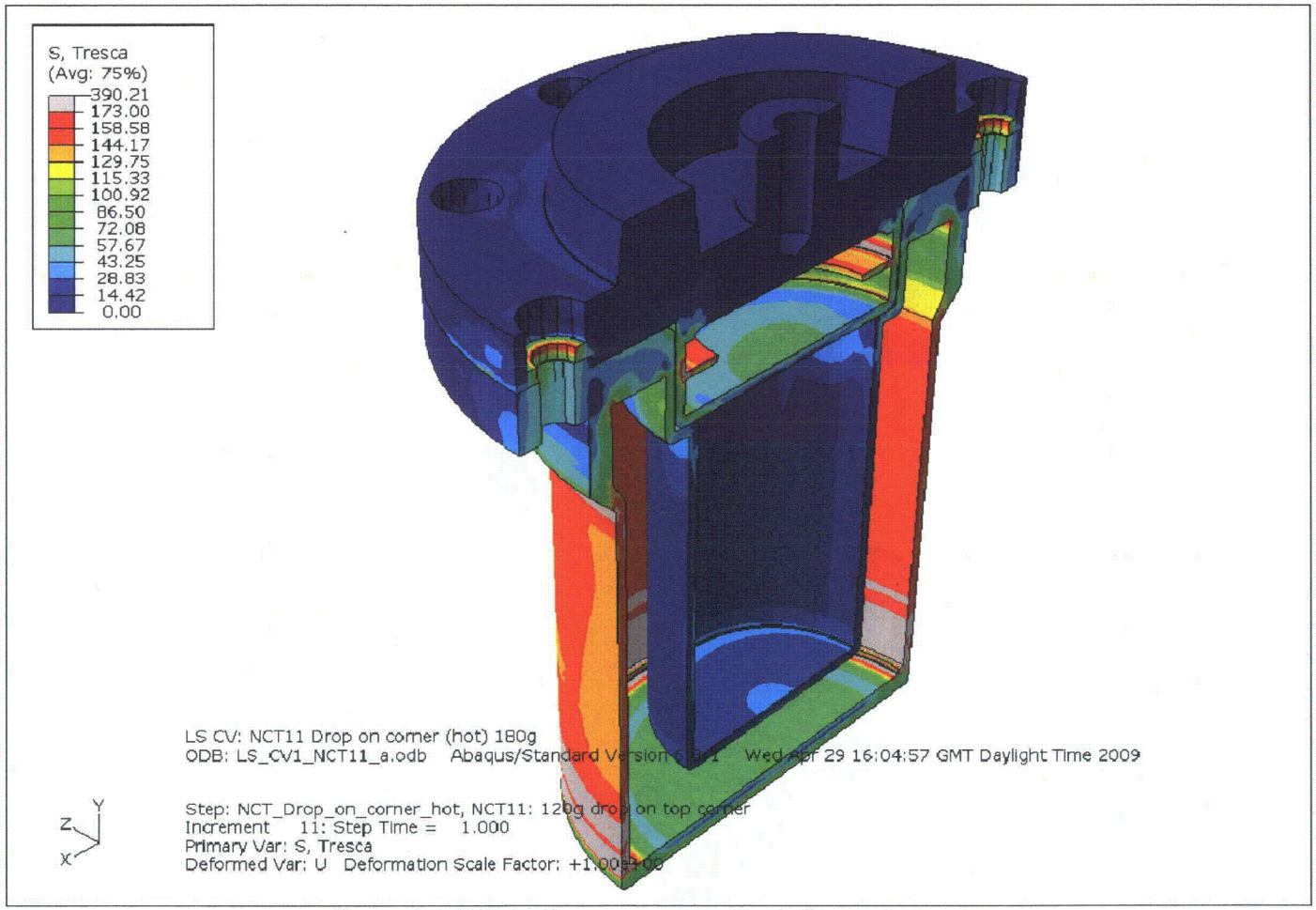

Figure 24: NCT11 Drop on corner (hot): Stress intensity

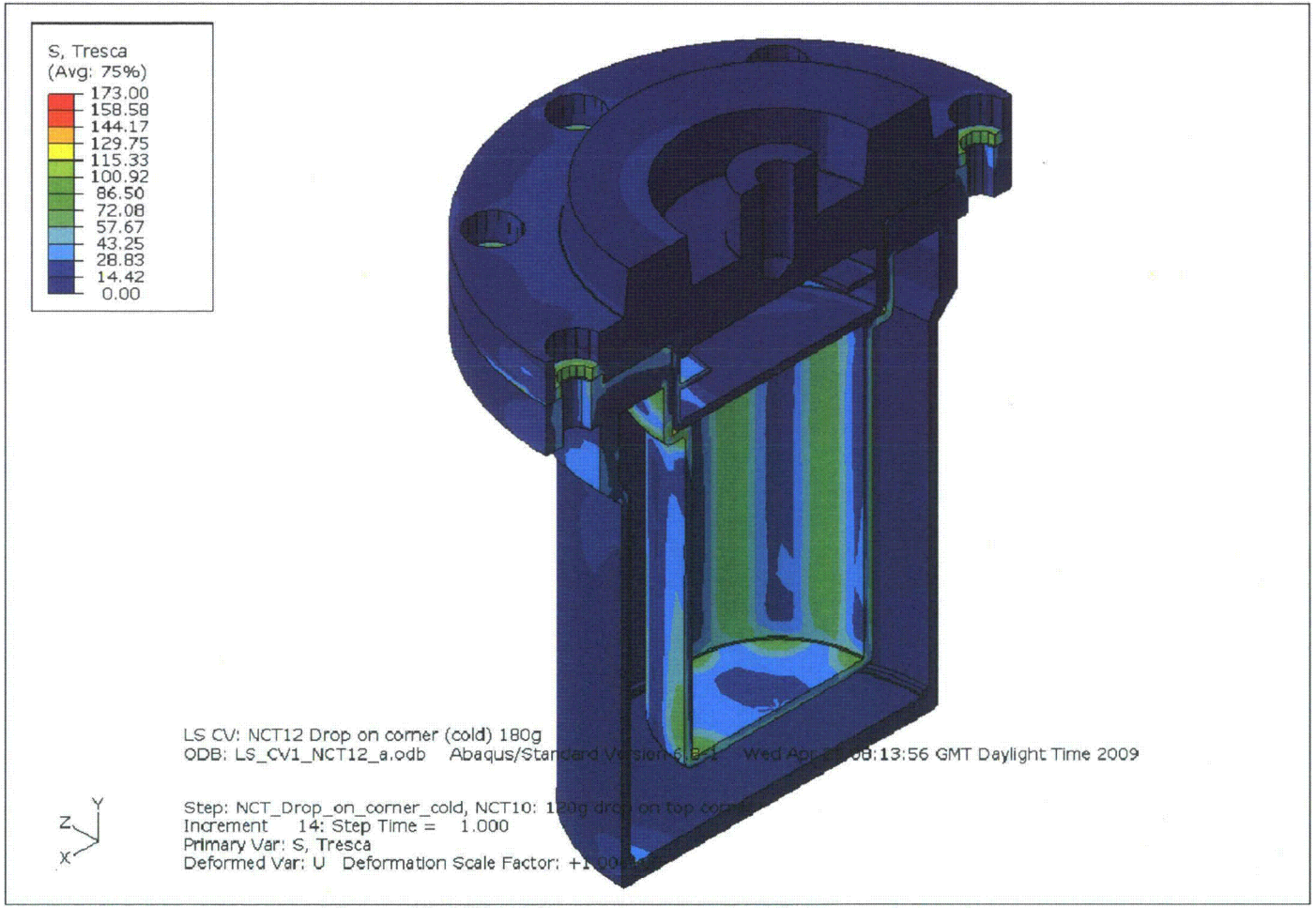

Figure 25: NCT12 Drop on corner (cold): Stress intensity

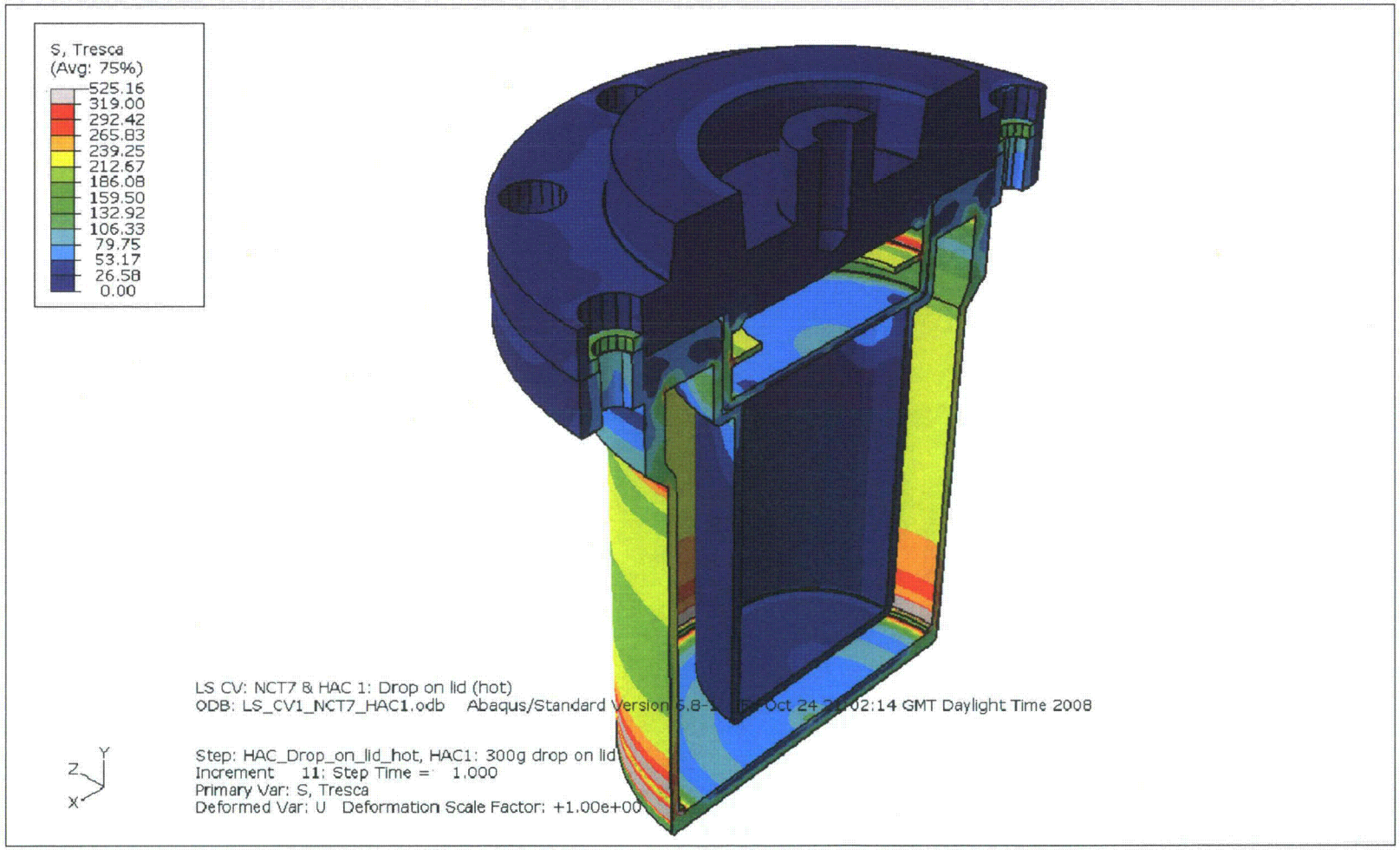

Figure 26: HAC1 Drop on lid (hot): Stress intensity

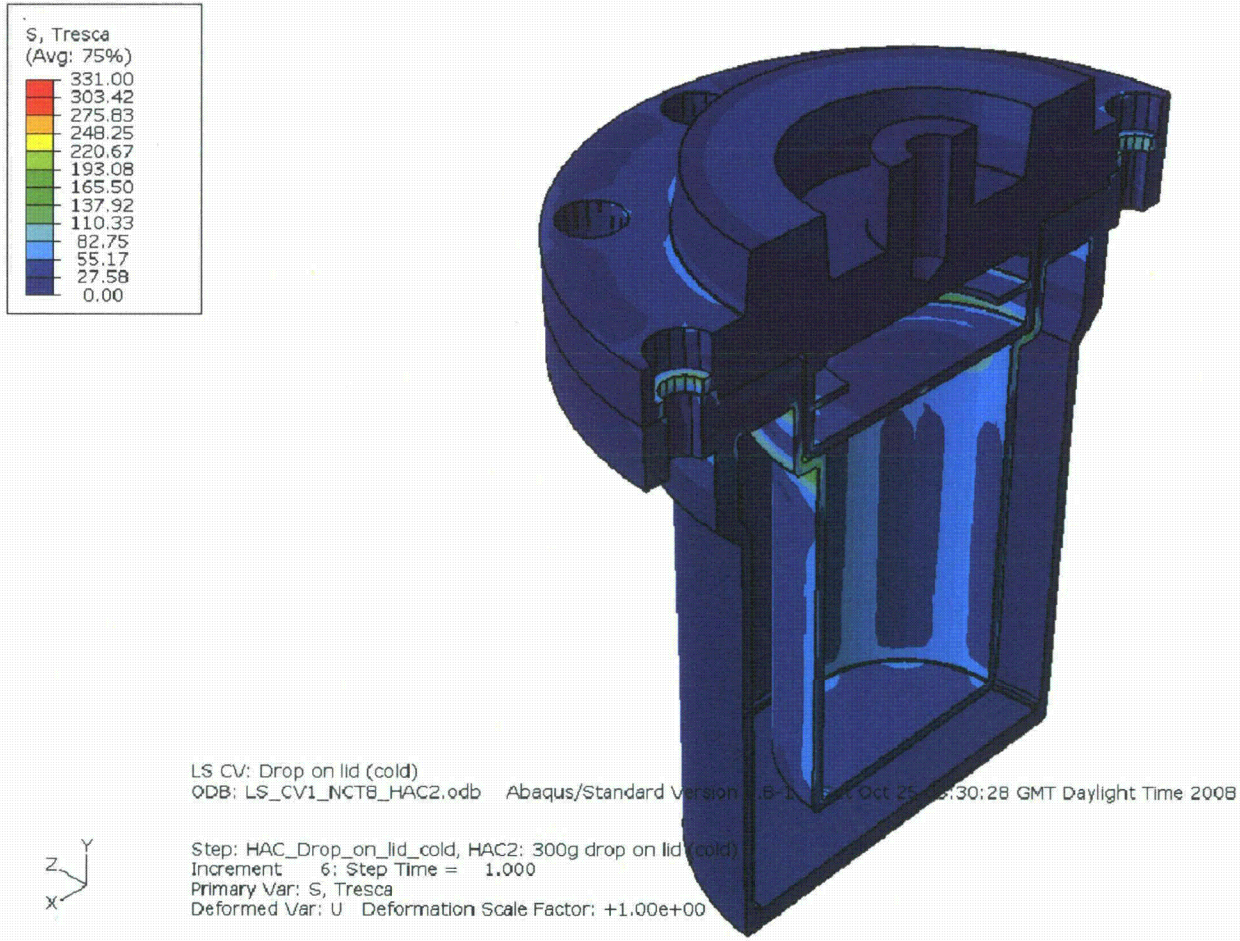

Figure 27: HAC2 Drop on lid (cold): Stress intensity

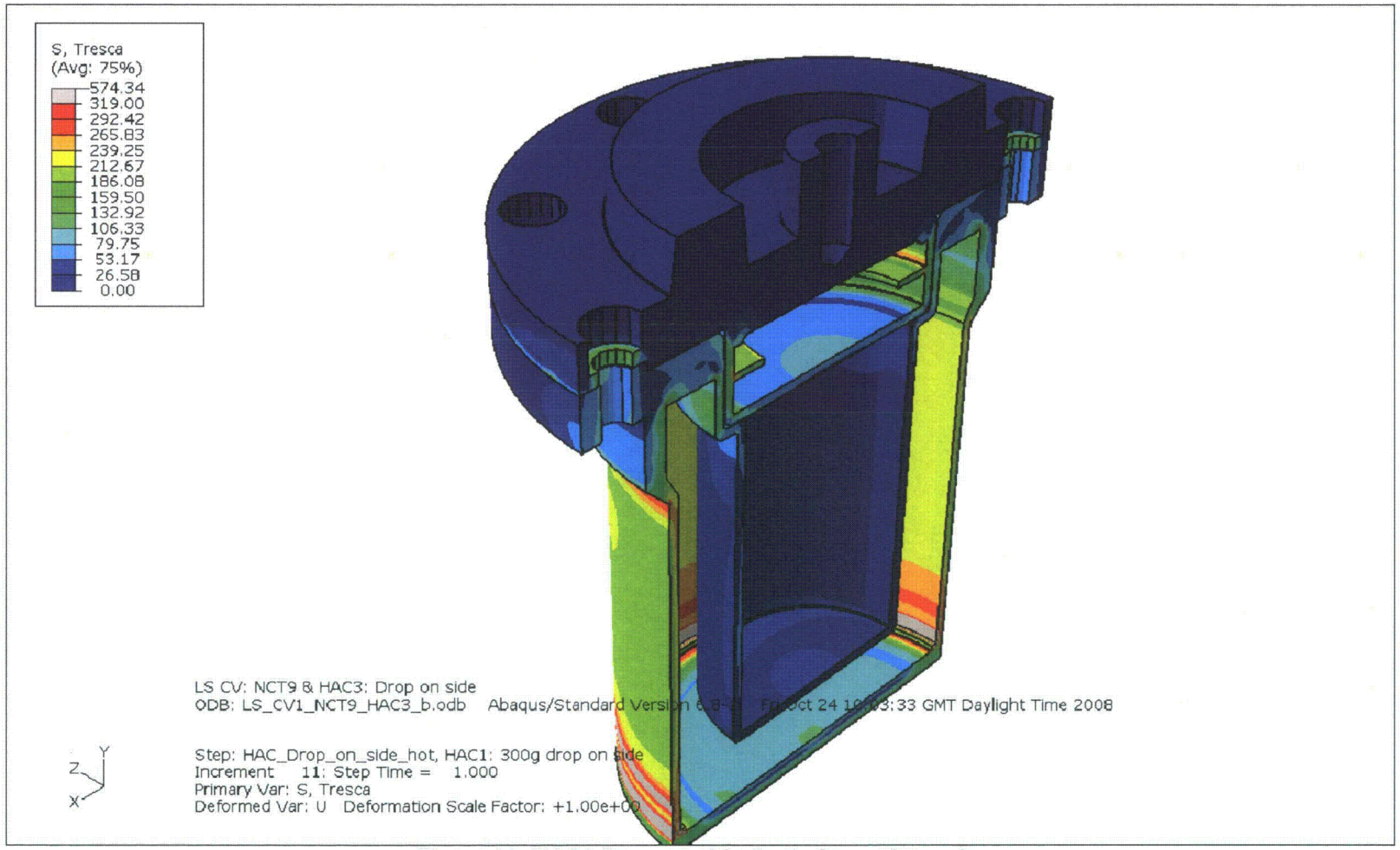

Figure 28: HAC3 Drop on side (hot): Stress intensity

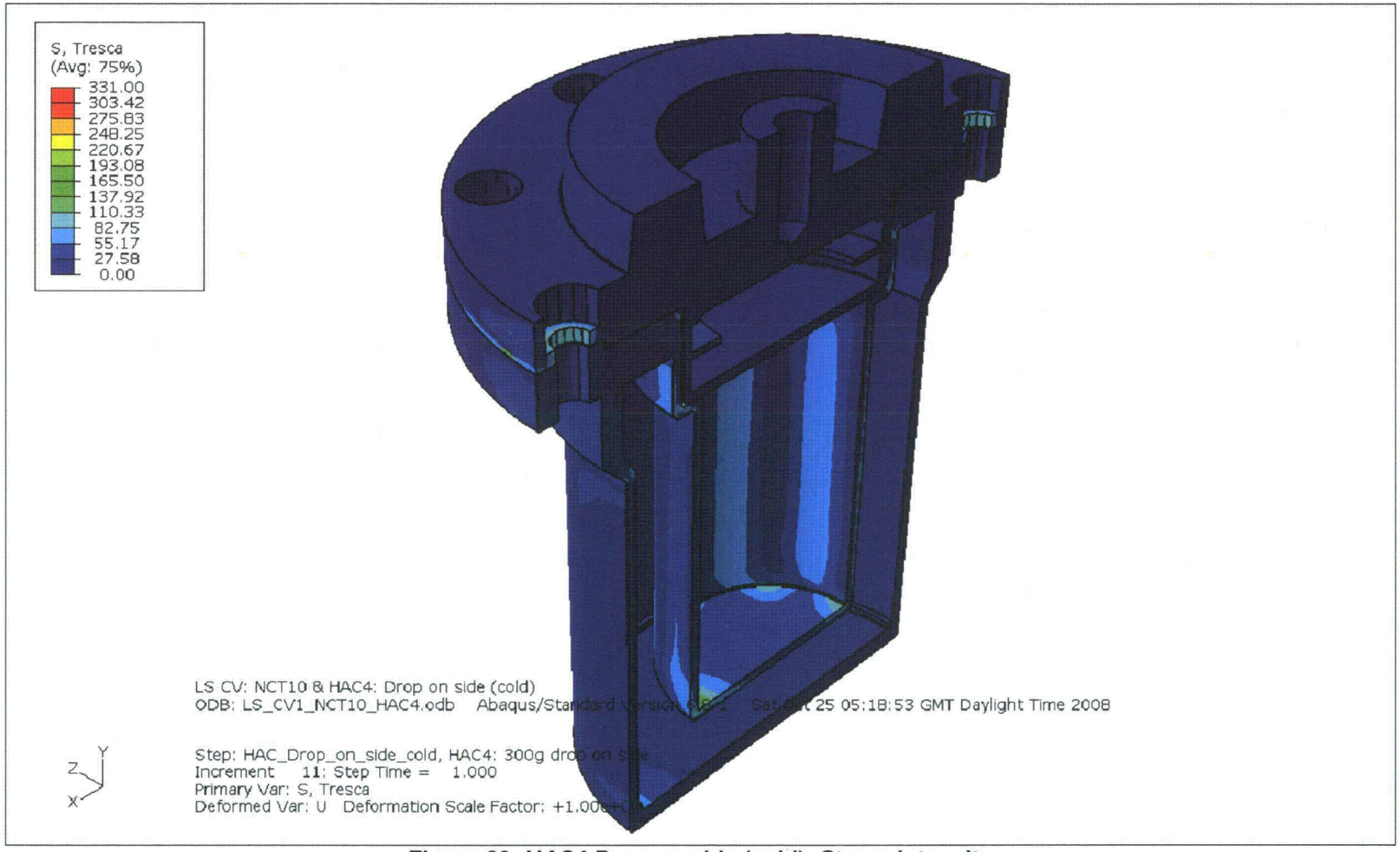

Figure 29: HAC4 Drop on side (cold): Stress intensity

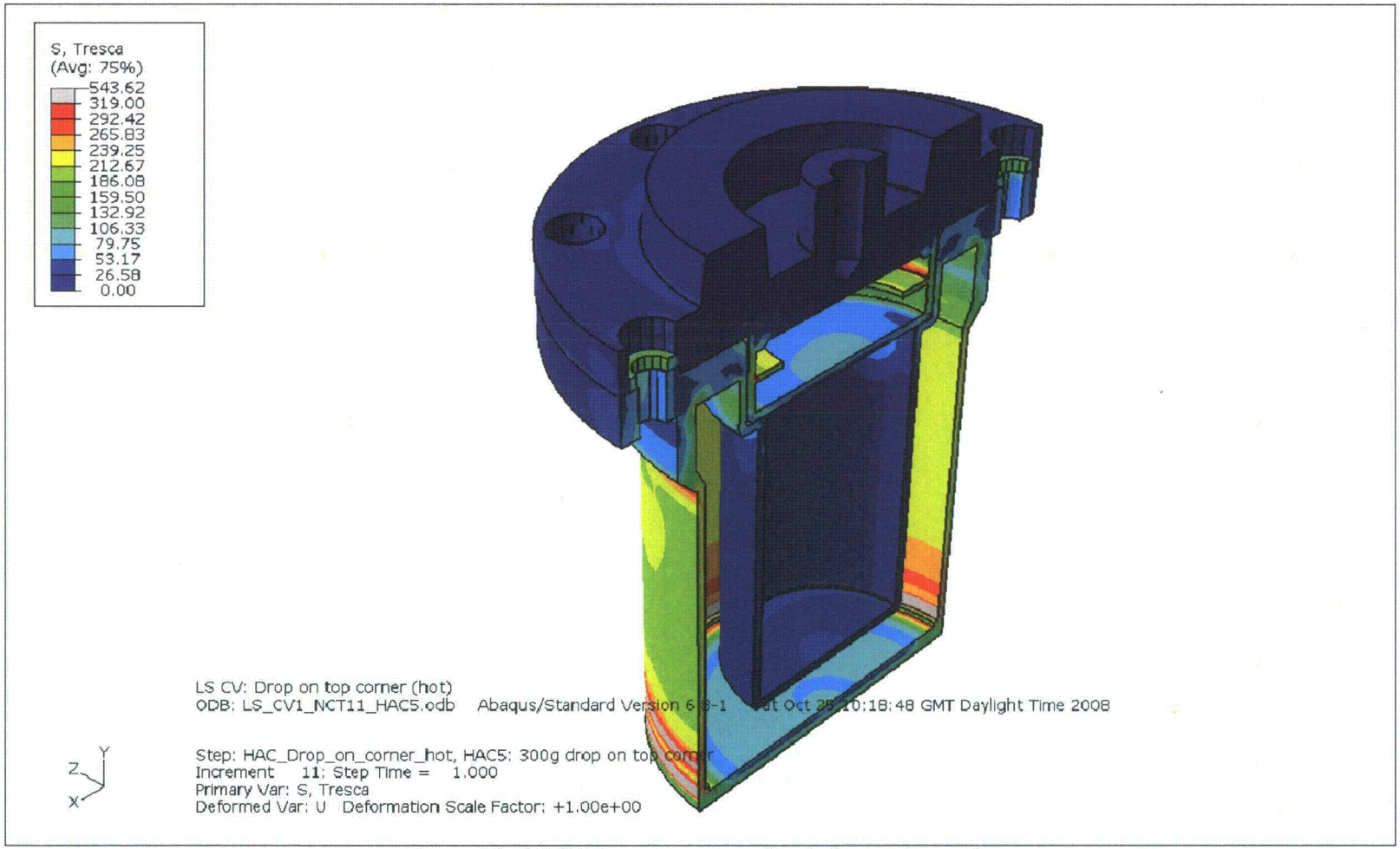

Figure 30: HAC5 Drop on corner (hot): Stress intensity

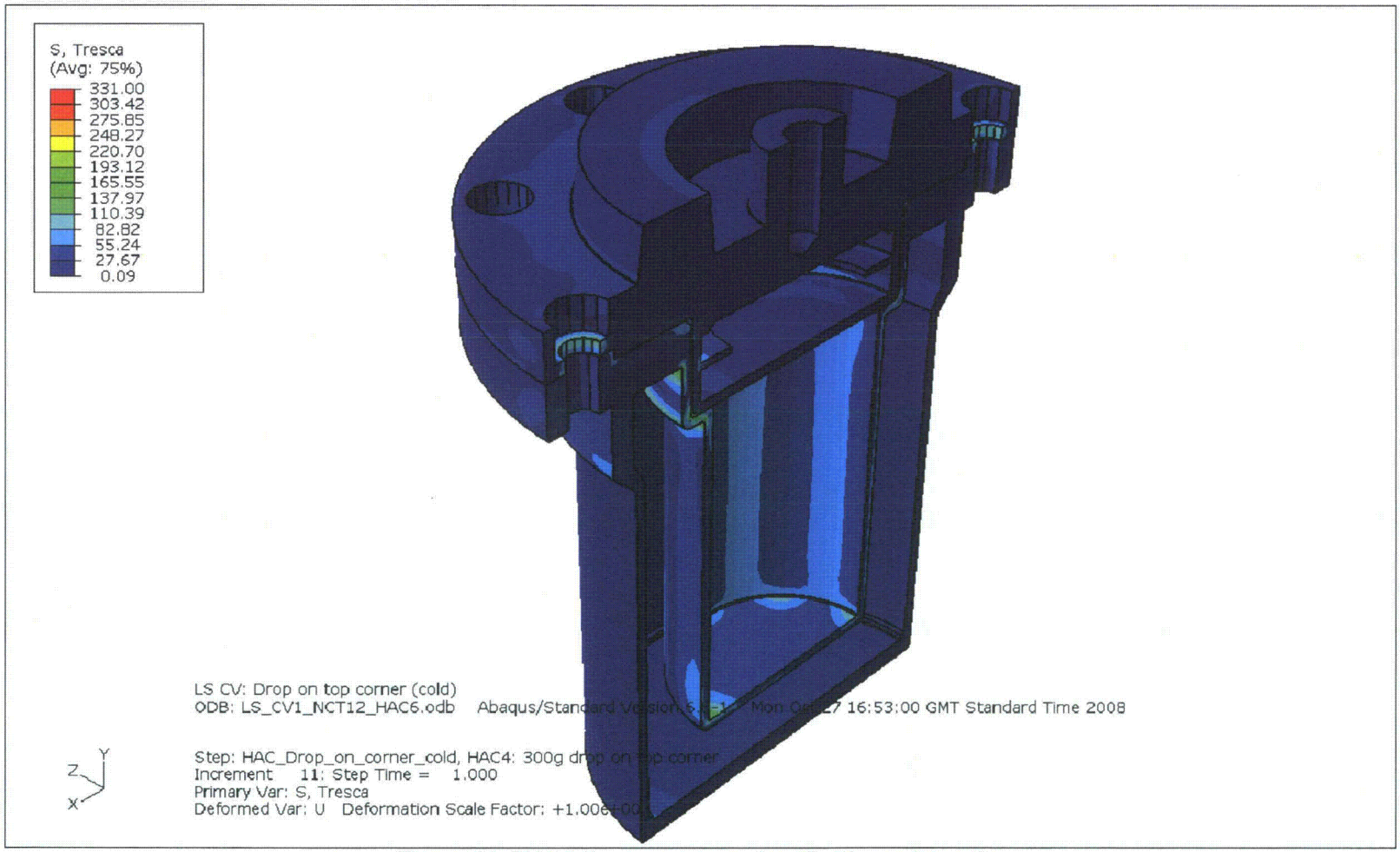

Figure 31: HAC6 Drop on corner (cold): Stress intensity

Appendix A
Buckling Calculation

VECTRA GROUP LIMITED

CALCULATION SHEET

Project Title	Stress Analysis of Safkeg LS Containment Vessel
Project Number	925-3272
Calculation Title	Buckling calculation for case NCT1
Calculation Ref	NCT1-C1
Issue	1

Calc by	GD Jones	Date	12/11/08
Checked by		Date	

Introduction

This calculation evaulates the buckling resistance of a cylindrical shell using the procedures giv
ASME Boiler and Pressurve Vessel Code 2007: Code Case N-284-2

Material Properties

Assessment temperature $T := 149 \cdot °C$

Young's modulus $E := 186 \cdot GPa$

Yield stress $\sigma_y := 132 \cdot MPa$

Geomerty

Shell mean radius $R := 33.75 \cdot mm$

Shell thickness $t := 3.0 \cdot mm$

Distance between lines of support in meridional direction $l_\phi := 109 \cdot mm$

Cross-sectional area of meridional stiffeners $A_\phi := 0 \cdot m^2$

Distance between lines of support in circumferential direction $l_\theta := 2 \cdot \pi \cdot R$

Cross-section area of circumferential stiffeners $A_\theta := 0 \cdot m^2$

Effective thicknesses

Meridional $t_\phi := \frac{A_\phi}{l_\phi} + t$

Circumferential $t_\theta := \frac{A_\theta}{l_\theta} + t$

Shear $t_{\phi\theta} := 0.5 \cdot (t_\phi + t_\theta)$

Stresses from FEA

Membrane stresses at location C5

Axial compression $\sigma_\phi := -3.64 \cdot MPa$ $\quad \sigma_{\phi\phi} := \begin{cases} \sigma_\phi & \text{if } \sigma_\phi > 0 \\ (1 \cdot Pa) & \text{otherwise} \end{cases}$

Hoop compression $\sigma_\theta := -5.12 \cdot MPa$ $\quad \sigma_{\theta\theta} := \begin{cases} \sigma_\theta & \text{if } \sigma_\theta > 0 \\ (1 \cdot Pa) & \text{otherwise} \end{cases}$

In-plane shear $\sigma_{\phi\theta} := 0.06 \cdot MPa$ $\quad \sigma_{\phi\theta\phi\theta} := \begin{cases} \sigma_{\phi\theta} & \text{if } \sigma_{\phi\theta} > 0 \\ (1 \cdot Pa) & \text{otherwise} \end{cases}$

Safety factors

Load_case := "NCT"

$$FS := \begin{cases} 2.0 & \text{if Load_case = "NCT"} \\ 1.34 & \text{if Load_case = "HAC"} \end{cases}$$

$FS = 2.0$

Capacity Reduction Factors

Cylindrical shell

(a) Axial compression

$$\alpha_{\phi L} := \left| \begin{array}{l} f_t \leftarrow \dfrac{R}{t} \\ M_\phi \leftarrow \dfrac{l_\phi}{\sqrt{R \cdot t}} \\ \alpha_{\phi L_0} \leftarrow 0.207 \ \text{ if } f_t \geq 600 \\ \text{if } f_t < 600 \\ \quad \left| \begin{array}{l} a_1 \leftarrow 1.52 - 0.473 \cdot \log\left(\dfrac{R}{t}\right) \\ a_2 \leftarrow \dfrac{300 \cdot \sigma_y}{E} - 0.033 \\ \alpha_{\phi L_0} \leftarrow \min(a_1, a_2) \end{array} \right. \\ \alpha_{\phi L_1} \leftarrow 0.627 \ \text{ if } M_\phi < 0.5 \\ \alpha_{\phi L_1} \leftarrow 0.837 - 0.14 \cdot M_\phi \ \text{ if } M_\phi \geq 1.5 \wedge M_\phi < 1.73 \\ \alpha_{\phi L_1} \leftarrow \dfrac{0.826}{M_\phi^{0.6}} \ \text{ if } M_\phi \geq 1.73 \wedge M_\phi < 10 \\ \alpha_{\phi L_1} \leftarrow 0.207 \ \text{ if } M_\phi \geq 10 \\ \text{return } \max(\alpha_{\phi L}) \end{array} \right.$$

$$\alpha_{\phi L} = 0.2$$

(b) Hoop compression

$$\alpha_{\theta L} := 0.8$$

(c) Shear

$$\alpha_{\phi\theta L} := \left| \begin{array}{l} f_t \leftarrow \dfrac{R}{t} \\ \alpha_{\phi\theta L} \leftarrow 0.8 \ \text{ if } f_t \leq 250 \\ \alpha_{\phi.\theta L} \leftarrow 1.323 - 0.218 \cdot \log(f_t) \ \text{ otherwise} \\ \text{return } \alpha_{\phi\theta L} \end{array} \right.$$

$$\alpha_{\phi\theta L} = 0.8$$

Local Buckling

Cylindrical shells - unstiffened

Theoretical elastic instability stresses

(a) Axial compression

$$\sigma_{\phi eL} := \left| \begin{array}{l} M_\phi \leftarrow \dfrac{l_\phi}{\sqrt{R \cdot t}} \\ C_\phi \leftarrow 0.630 \ \text{ if } M_\phi \le 1.5 \\ C_\phi \leftarrow \dfrac{0.904}{M_\phi^{\,2}} + 0.1013 \cdot M_\phi^{\,2} \ \text{ if } M_\phi > 1.5 \wedge M_\phi \le 1.73 \\ C_\phi \leftarrow 0.605 \ \text{ if } M_\phi \ge 1.73 \\ \dfrac{C_\phi \cdot E \cdot t}{R} \end{array} \right.$$

$$\sigma_{\phi eL} = 10003 \cdot MPa$$

(b) External pressure

(1) No end pressure (K=0)

$$\sigma_{reL} := \left| \begin{array}{l} M_\phi \leftarrow \dfrac{l_\phi}{\sqrt{R \cdot t}} \\ C_{\theta r} \leftarrow 1.161 \ \text{ if } M_\phi \le 1.5 \\ C_{\theta r} \leftarrow \dfrac{2.41}{M_\phi^{\,1.49} - 0.338} \ \text{ if } M_\phi > 1.5 \wedge M_\phi < 3.0 \\ C_{\theta r} \leftarrow \dfrac{0.92}{M_\phi - 1.17} \ \text{ if } M_\phi \ge 3.0 \wedge M_\phi < 1.65 \cdot \dfrac{R}{t} \\ C_{\theta r} \leftarrow 0.275 \cdot \dfrac{t}{R} + \dfrac{2.1}{M_\phi^{\,4}} \left(\dfrac{R}{t}\right)^3 \ \text{ if } M_\phi \ge 1.65 \cdot \dfrac{R}{t} \\ \dfrac{C_{\theta r} \cdot E \cdot t}{R} \end{array} \right.$$

$$\sigma_{reL} = 1574 \cdot MPa$$

(2) End pressure included (K=0.5)

$$\sigma_{heL} := \left| \begin{array}{l} M_\phi \leftarrow \dfrac{l_\phi}{\sqrt{R \cdot t}} \\ C_{\theta r} \leftarrow 0.988 \ \text{ if } M_\phi \le 1.5 \\ C_{\theta r} \leftarrow \dfrac{1.08}{M_\phi^{\,1.07} - 0.45} \ \text{ if } M_\phi > 1.5 \wedge M_\phi < 3.5 \\ C_{\theta r} \leftarrow \dfrac{0.92}{M_\phi - 0.636} \ \text{ if } M_\phi \ge 3.5 \wedge M_\phi < 1.65 \cdot \dfrac{R}{t} \\ C_{\theta r} \leftarrow 0.275 \cdot \dfrac{t}{R} + \dfrac{2.1}{M_\phi^{\,4}} \left(\dfrac{R}{t}\right)^3 \ \text{ if } M_\phi \ge 1.65 \cdot \dfrac{R}{t} \\ \dfrac{C_{\theta r} \cdot E \cdot t}{R} \end{array} \right.$$

$$\sigma_{heL} = 1492 \cdot MPa$$

(c) Shear

$$\sigma_{\phi\theta eL} := \left| \begin{array}{l} M_\phi \leftarrow \dfrac{l_\phi}{\sqrt{R \cdot t}} \\ C_{\phi\theta} \leftarrow 2.227 \ \text{ if } M_\phi \le 1.5 \\ C_{\phi\theta} \leftarrow \dfrac{4.82}{M_\phi^{\,2}} \cdot \left(1 + 0.0239 \cdot M_\phi^{\,3}\right)^{0.5} \ \text{ if } M_\phi > 1.5 \wedge M_\phi < 26 \\ C_{\phi\theta} \leftarrow \dfrac{0.746}{\sqrt{M_\phi}} \ \text{ if } M_\phi \ge 26 \wedge 8.69 \cdot \dfrac{R}{t} \\ C_{\phi\theta} \leftarrow 0.253 \cdot \left(\dfrac{t}{R}\right)^{0.5} \ \text{ if } M_\phi \ge 8.69 \cdot \dfrac{R}{t} \\ \dfrac{C_{\phi\theta} \cdot E \cdot t}{R} \end{array} \right.$$

$$\sigma_{\phi\theta eL} = 3804 \cdot MPa$$

Plasticity Reduction Factors

(a) Axial compression

$$\eta_\phi := \left| \begin{array}{l} \Delta \leftarrow \dfrac{\alpha_{\phi L} \cdot \sigma_{\phi eL}}{\sigma_y} \\ 1.0 \ \text{ if } \Delta \le 0.55 \\ \left(\dfrac{0.45}{\Delta} + 0.18\right) \ \text{ if } \Delta > 0.55 \wedge \Delta \le 1.6 \\ \dfrac{1.31}{1 + 1.15 \cdot \Delta} \ \text{ if } \Delta > 1.6 \wedge \Delta < 6.25 \\ \dfrac{1}{\Delta} \ \text{ if } \Delta \ge 6.25 \end{array} \right.$$

$$\eta_\phi = 0.1$$

(b) Hoop compression

$$\eta_\theta := \left| \begin{array}{l} \sigma_{\theta eL} \leftarrow \max(\sigma_{reL}, \sigma_{heL}) \\ \Delta \leftarrow \dfrac{\alpha_{\theta L} \cdot \sigma_{\theta eL}}{\sigma_y} \\ 1.0 \ \text{ if } \Delta \le 0.67 \\ \dfrac{2.53}{1 + 2.29 \cdot \Delta} \ \text{ if } \Delta > 0.67 \wedge \Delta < 4.2 \\ \dfrac{1}{\Delta} \ \text{ if } \Delta \ge 4.2 \end{array} \right.$$

$$\eta_\theta = 0.1$$

(c) Shear

$$\eta_{\phi\theta} := \left| \begin{array}{l} \Delta \leftarrow \dfrac{\alpha_{\phi\theta L} \cdot \sigma_{\phi\theta eL}}{\sigma_y} \\ 1.0 \ \text{ if } \Delta \le 0.48 \\ \dfrac{0.43}{\Delta} \ \text{ if } \Delta > 0.48 \wedge \Delta < 1.7 \\ \dfrac{0.6}{\Delta} \ \text{ if } \Delta \ge 1.7 \end{array} \right.$$

$$\eta_{\phi\theta} = 0.0$$

Allowable stresses

Elastic Buckling

Axial compression alone $\sigma_{xa} := \frac{\alpha_{\phi L} \cdot \sigma_{\phi eL}}{FS}$ $\sigma_{xa} = 1035 \cdot MPa$

Hydrostatic external pressure $\sigma_{ha} := \frac{\alpha_{\theta L} \cdot \sigma_{heL}}{FS}$ $\sigma_{ha} = 597 \cdot MPa$

Radial external pressure $\sigma_{ra} := \frac{\alpha_{\theta L} \cdot \sigma_{reL}}{FS}$ $\sigma_{ra} = 630 \cdot MPa$

In-plane shear alone $\sigma_{\tau a} := \frac{\alpha_{\phi\theta L} \cdot \sigma_{\phi\theta eL}}{FS}$ $\sigma_{\tau a} = 1522 \cdot MPa$

Inelastic Buckling

Axial compression alone $\sigma_{xc} := \eta_{\phi} \cdot \sigma_{xa}$ $\sigma_{xc} = 66.0 \cdot MPa$

Radial external pressure $\sigma_{rc} := \eta_{\theta} \cdot \sigma_{ra}$ $\sigma_{rc} = 66.0 \cdot MPa$

In-plane shear alone $\sigma_{\tau c} := \eta_{\phi\theta} \cdot \sigma_{\tau a}$ $\sigma_{\tau c} = 39.6 \cdot MPa$

Assessment

Elastic buckling of cylindrical shell

$$\text{design_margin}_e := \left| \begin{array}{l}
K \leftarrow \dfrac{\sigma_\phi}{\sigma_\theta} \cdot \dfrac{t_\phi}{t_\theta} \\
\text{if } \sigma_{\phi\theta} = 0 \wedge K < 0.5 \\
\quad \left| \begin{array}{l}
DM \leftarrow \dfrac{\sigma_{ha}}{\sigma_\theta} - 1 \ \text{ if } \sigma_\theta < \sigma_{ha} \\
DM \leftarrow \left[\dfrac{\sigma_\theta}{\sigma_{ra} - 2\,\sigma_\phi \left(\dfrac{\sigma_{ra}}{\sigma_{ha}} - 1 \right)} \right]^{-1} - 1 \ \text{ otherwise} \\
\text{return DM}
\end{array} \right. \\
\text{if } \sigma_{\phi\theta} = 0 \wedge K \geq 0.5 \\
\quad \left| \begin{array}{l}
DM \leftarrow \dfrac{0.5 \cdot \sigma_{ha} \cdot \dfrac{t_\theta}{t_\phi}}{\sigma_\phi} - 1 \ \text{ if } \sigma_\phi \leq 0.5 \cdot \sigma_{ha} \cdot \dfrac{t_\theta}{t_\phi} \\
DM \leftarrow \left[\dfrac{\sigma_\phi - 0.5\,\sigma_{ha} \dfrac{t_\theta}{t_\phi}}{\sigma_{xa} - 0.5 \cdot \sigma_{ha} \cdot \dfrac{t_\theta}{t_\phi}} + \left(\dfrac{\sigma_\theta}{\sigma_\phi} \right)^2 \right]^{-1} - 1 \ \text{ otherwise} \\
\text{return DM}
\end{array} \right. \\
\text{if } \sigma_\theta = 0 \\
\quad \left| \begin{array}{l}
DM \leftarrow \left[\dfrac{\sigma_\phi}{\sigma_{xa}} + \left(\dfrac{\sigma_{\phi\theta}}{\sigma_{\tau a}} \right)^2 \right]^{-1} - 1 \\
\text{return DM}
\end{array} \right. \\
\text{if } \sigma_\phi = 0 \\
\quad \left| \begin{array}{l}
DM \leftarrow \left[\dfrac{\sigma_\theta}{\sigma_{ra}} + \left(\dfrac{\sigma_{\phi\theta}}{\sigma_{\tau a}} \right)^2 \right]^{-1} - 1 \\
\text{return DM}
\end{array} \right. \\
K_s \leftarrow 1 - \left(\dfrac{\sigma_{\phi\theta}}{\sigma_{ra}} \right)^2 \\
\text{if } K < 0.5 \\
\quad \left| \begin{array}{l}
DM \leftarrow \dfrac{\sigma_{ha}}{\sigma_\theta} - 1 \ \text{ if } \sigma_\theta < \sigma_{ha} \\
DM \leftarrow \left[\dfrac{\sigma_\theta}{K_s \cdot \sigma_{ra} - 2 \cdot \sigma_\phi \cdot \left(\dfrac{K_s \cdot \sigma_{ra}}{K_s\,\sigma_{ha}} - 1 \right)} \right]^{-1} - 1 \ \text{ otherwise} \\
\text{return DM}
\end{array} \right. \\
\text{if } K \geq 0.5 \\
\quad \left| \begin{array}{l}
DM \leftarrow \dfrac{0.5 \cdot K_s \cdot \sigma_{ha} \cdot \dfrac{t_\theta}{t_\phi}}{\sigma_\phi} - 1 \ \text{ if } \sigma_\phi \leq 0.5 \cdot K_s \cdot \sigma_{ha} \cdot \dfrac{t_\theta}{t_\phi} \\
DM \leftarrow \left[\dfrac{\sigma_\phi - 0.5 \cdot K_s \cdot \sigma_{ha} \cdot \dfrac{t_\theta}{t_\phi}}{K_s \cdot \sigma_{xa} - 0.5 \cdot K_s \cdot \sigma_{ha} \cdot \dfrac{t_\theta}{t_\phi}} + \left(\dfrac{\sigma_\theta}{\sigma_\phi} \right)^2 \right]^{-1} - 1 \ \text{ otherwise} \\
\text{return DM}
\end{array} \right.
\end{array} \right.$$

$$\text{design_margin}_e = 2.98 \times 10^8$$

Inelastic buckling of cylindrical shell

$$\text{design_margin}_c := \begin{cases} \text{if } \sigma_{\phi\theta} = 0 \\ \quad \begin{cases} DM1 \leftarrow \dfrac{\sigma_{xc}}{\sigma_\phi} - 1 \\ DM2 \leftarrow \dfrac{\sigma_{rc}}{\sigma_\theta} - 1 \\ DM \leftarrow \min(DM1, DM2) \\ \text{return } DM \end{cases} \\ \text{otherwise} \\ \quad \begin{cases} DM1 \leftarrow \left[\left(\dfrac{\sigma_\phi}{\sigma_{xc}}\right) + \left(\dfrac{\sigma_{\phi\theta}}{\sigma_{\tau c}}\right)^2\right]^{-1} - 1 \\ DM2 \leftarrow \left[\left(\dfrac{\sigma_\theta}{\sigma_{rc}}\right) + \left(\dfrac{\sigma_{\phi\theta}}{\sigma_{\tau c}}\right)^2\right]^{-1} - 1 \\ DM \leftarrow \min(DM1, DM2) \\ \text{return } DM \end{cases} \end{cases}$$

$$\text{design_margin}_c = 4.33 \times 10^5$$

Conclusion

Take the minimum of elastic and inelastic design margins

$$\text{design_margin} := \min(\text{design_margin}_e, \text{design_margin}_c)$$

$$\text{design_margin} = 4.33 \times 10^5$$

Thus the Design Margin for buckling under the conditions for case NCT1 is satisfactory.