U.S. Department of Transportation
Maritime Administration
Office of Ship Disposal

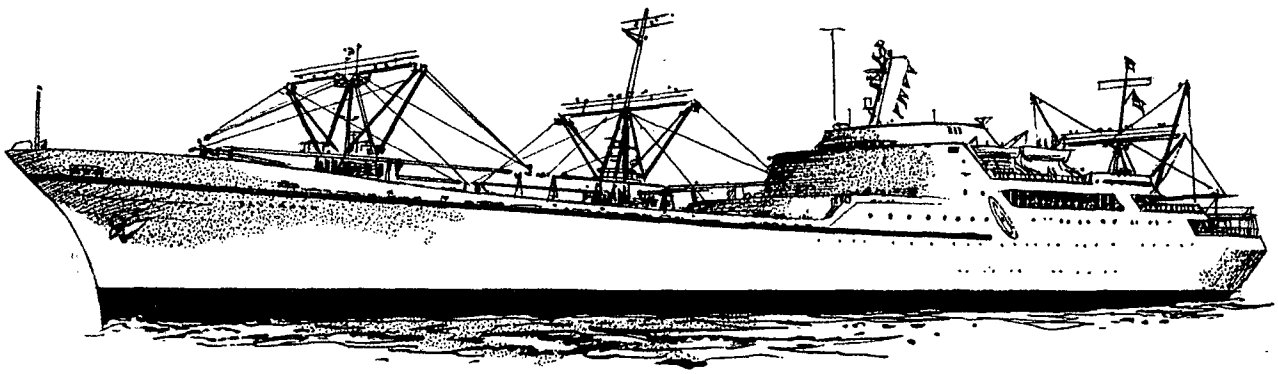

N.S. SAVANNAH

UPDATED FINAL SAFETY ANALYSIS REPORT

STS-004-002
Revision VI

Approved: _____ 05/04/2011
Senior Technical Advisor Date

Prepared by:
Sayres and Associates Corporation

RECORD OF REVISIONS

Revision	Summary of Revisions Following Final Shutdown and Permanent Defueling
STS-004-002, UFSAR Revision IV	A complete revision to the FSAR that incorporates numerous changes that occurred from 1968 through March 2007
STS-004-002, Revisions 1-4	These revision numbers to the STS were not used. By not using these numbers, the revision number for the FSAR and the revision number to STS-004-002 will be the same revision number.
STS-004-002, Rev. 5; FSAR Revision V	This revision incorporates changes that occurred after March 2007. The most significant changes are in Chapter 2 (Fire Detection and Alarm Systems, Security Systems and General Alarm) and Chapter 3 (Ship Movement and Port Operating Criteria).
STS-004-002, Rev. 6; FSAR Revision VI	This revision incorporates changes that occurred after March 2009. The most significant change is the electrical modifications to deenergize all originally installed 450 volt switchgear. All required 450/480 volt loads were moved to a new 800A Shore Power Switchboard. Chapter 2.4.2, Fire Detection and Alarm system (FA) and Chapter 2.9. Dehumidification System were rewritten.

PREVIOUS ISSUES

N.S. *SAVANNAH* SAFETY ASSESSMENT, Volumes I-V, 1960-1962
N.S. *SAVANNAH* HAZARDS SUMMARY REPORT FOR DOCKSIDE OPERATION, September 1963
N.S. *SAVANNAH* HAZARDS SUMMARY REPORT FOR 1964 SEA TRIALS, December 1963
N.S. *SAVANNAH* SAFETY ASSESSMENT, Revision I, July 1965
N.S. *SAVANNAH* SAFETY ASSESSMENT, Revision II, March 1967
SAFETY ANALYSIS REPORT N.S. *SAVANNAH* FUEL SHUFFLE, December 1, 1967
N.S. *SAVANNAH* SAFETY ASSESSMENT, Revision III, October 1968
SAFETY ANALYSIS SUMMARY – N.S. *SAVANNAH* DEFUELING, February 1971
SUPPLEMENT NO. 1 TO SAFETY ANALYSIS REPORT N.S. *SAVANNAH* FUEL SHUFFLE – FUELING WITH CORE II, October 1971 (Note that Core II was never installed)
UPDATED FINAL SAFETY ANALYSIS REPORT, Revision IV, April 2007
UPDATED FINAL SAFETY ANALYSIS REPORT, Revision V, May 2009

LIST OF EFFECTIVE PAGES

Page No.	Rev. No.	Page No.	Rev. No.	Page No.	Rev. No.	Page No.	Rev. No.	Page No.	Rev. No.
i	6	ii	6	iii	6	iv	6	v	6
vi	6	vii	6	viii	6	ix	6	x	6
xi	6	xii	6	xiii	6	xiv	6		
1	6	2	6	3	6	4	6	5	6
6	6	7	6	8	6	9	6	10	6
11	6	12	6	13	6	14	6	15	6
16	6	17	6	18	6	19	6	20	6
21	6	22	6	23	6	24	6	25	6
26	6	27	6	28	6	29	6	30	6
31	6	32	6	33	6	34	6	35	6
36	6	37	6	38	6	39	6	40	6
41	6	42	6	43	6	44	6	45	6
46	6	47	6	48	6	49	6	50	6
51	6	52	6	53	6	54	6	55	6
56	6	57	6	58	6	59	6	60	6
61	6	62	6	63	6	64	6	65	6
66	6	67	6	68	6	69	6	70	6
71	6	72	6	73	6	74	6	75	6
76	6	77	6	78	6	79	6	80	6
81	6	82	6	83	6	84	6	85	6
86	6	87	6	88	6	89	6	90	6
91	6	92	6	93	6	94	6	95	6
96	6	97	6	98	6	99	6	100	6
101	6	102	6	103	6	104	6	105	6
106	6	107	6	108	6	109	6	110	6
111	6	112	6	113	6	114	6	115	6
116	6	117	6	118	6	119	6	120	6

Page No.	Rev. No.	Page No.	Rev. No.	Page No.	Rev. No.	Page No.	Rev. No.	Page No.	Rev. No.
121	6	122	6	123	6	124	6	125	6
126	6	127	6	128	6	129	6	130	6
131	6	132	6	133	6	134	6	135	6
136	6	137	6	138	6	139	6	140	6
141	6	142	6	143	6	144	6	145	6
146	6	147	6	148	6	149	6	150	6
151	6	152	6						

Table of Contents

Record of Revisions ii

Previous Issues ii

List of Effective Pages iii

Foreword to Revision VI (2011) xiii

Foreword to Revision V (2009) xiii

Foreword to Revision IV xiii

1 INTRODUCTION AND SUMMARY 1
- 1.1 Summary of Significant Events 1
- 1.2 Principal Safety Features of the Ship 8
  - 1.2.1 The Hull 8
  - 1.2.2 The Power Plant 9
- 1.3 Ship and System Status – 1976 to Present 10
  - 1.3.1 Power Plant Status as reported in April 1976 10
  - 1.3.2 Status of N.S. *SAVANNAH* from April 1976 – April 2009 13
  - 1.3.3 Radiological and Environmental Characterization Scoping Survey 17
  - 1.3.4 Current Status of N.S. *SAVANNAH* April 2009 to present 17
- 1.4 Symbols for the Reactor Plant Auxiliary Systems 18

2 SHIP DESCRIPTION 19
- 2.1 Features and Characteristics 19
- 2.2 Compartmentation, Decks and Space Arrangement 19
  - 2.2.1 Compartmentation 19
  - 2.2.2 Deck Arrangements 20
  - 2.2.3 Space Arrangement 21
- 2.3 Navigation and Steering Equipment 21
  - 2.3.1 Navigation Equipment 21
  - 2.3.2 Steering Gear 21
- 2.4 Fire Detection and Control System 21
  - 2.4.1 Fire Detecting System 21
  - 2.4.2 Fire Detection and Alarm System (FA) 22
- 2.5 Lifesaving Equipment 22
- 2.6 Radio Equipment 22
- 2.7 Deck Machinery 22
- 2.8 Flooding Alarms 22
- 2.9 Dehumidification System 22

2.10 Hull Cathodic Protection System 23
2.11 Security Systems 23
2.11.1 Camera Surveillance System 23
2.11.2 Security Entrance Door 23
2.12 General Alarm 23

3 SITE AND SITE CRITERIA 27
3.1 Site Description 27
3.2 Ship Movement and Port Operating Criteria 28
3.2.1 Purpose 28
3.2.2 Ship Movement Criteria 28
3.2.3 Port Operating Criteria 29
3.3 Control Zones 29
3.4 Comparison with Central Station Site criteria in the USA 29

4 CONTAINMENT 30
4.1 Introduction 30
4.2 Primary Containment (Containment Vessel) 30
4.2.1 Function and General Design Criteria 30
4.2.2 Containment Vessel 31
4.2.3 Containment Vessel Penetrations 33
4.2.4 Containment Auxiliary Features 34
4.2.5 Containment Performance Requirements 36
4.3 Reactor Compartment (Secondary Containment) 36
4.3.1 General Description 36
4.3.2 Cooling Section 37
4.3.3 Exhaust Section 37

5 RADIATION SHIELDING 53
5.1 Design Basis 53
5.2 Radiation Sources 53
5.3 Radiation Shields 53
5.3.1 Primary Shield 53
5.3.2 Secondary Shield 53
5.3.3 Local Shielding 55
5.4 Radiation Sources 55
5.5 Shield Surveys 55
5.6 Calculated Doses from Failed Fuel Rods 55

6 REACTOR CORE 56
6.1 Reactor Core General Description 56
6.1.1 Fuel Elements 56
6.1.2 Control Rods 56

6.1.3 Internals 56
6.2 Thermal and Hydraulic Characteristics 58
6.3 Nuclear Characteristics 58
6.4 Shipboard Physics Test Program 58

7 PRIMARY COOLANT SYSTEM 60
7.1 General Description 60
7.1.1 General Design Data 60
7.1.2 General Performance Data 61
7.2 Reactor Vessel 64
7.3 Steam Generators 66
7.4 Pressurizer 67
7.5 Primary Pumps 69
7.6 Valves 69
7.7 Primary (Neutron) Shield Tank 69
7.8 Primary Piping 69

8 POWER CONVERSION SYSTEMS 71
8.1 Steam Generators 71
8.1.1 General Description 71
8.1.2 Design Conditions 72
8.1.3 Construction Features 73
8.2 Main and Auxiliary Steam Systems 73
8.2.1 Main Steam System 73
8.2.2 Auxiliary Steam System 74
8.2.3 Intermediate Pressure Steam System 74
8.3 Main Propulsion System 74
8.3.1 High-Pressure Turbine 74
8.3.2 Low-Pressure and Astern Turbine 75
8.3.3 Reduction Gears 75
8.3.4 Propulsion Shafting and Propeller 75
8.3.5 Main Condenser 75
8.3.6 Main Condensate and Feedwater System 76
8.4 Emergency Propulsion System 77
8.5 Electrical Power Systems 77
8.5.1 Shore Power Connection 78
8.5.2 Power Distribution 78
8.6 Auxiliary Engine Room Systems 87
8.6.1 Instrument Air System 87
8.6.2 Waste Dilution and Disposal (WD) System 88
8.6.3 Engine Room Ventilation System 89
8.6.4 Blowdown Evaporator System 89
8.6.5 Fresh Water System 89

8.7 Water Chemistry and Control 90
8.7.1 Primary System 90
8.7.2 Secondary System 91
8.7.3 Laboratory Arrangements 93
8.7.4 Instrumentation 94
8.7.5 Operating Experience 94
8.8 Power Plant Performance 94

9 REACTOR PLANT AUXILIARY SYSTEMS 95
9.1 Reactor Emergency Systems 95
9.1.1 Emergency Cooling (DK) System 95
9.1.2 Soluble Poison (SP) System 96
9.2 Reactor Auxiliary Systems 96
9.2.1 Primary Loop Purification (PP) System 96
9.2.2 Buffer Seal (SL) System 99
9.2.3 Hydrogen Addition (HA) System 102
9.2.4 Primary Relief (PR) System 103
9.2.5 Primary Sampling (SA) System 104
9.2.6 Intermediate Cooling Water (CW) System 106
9.2.7 Containment Cooling (CC) System 110
9.2.8 Shutdown Circulation (SC) System 113
9.2.9 Primary Pressurizing (PE) System 113
9.3 Waste Management Systems 115
9.3.1 Equipment Drain and Waste Collection (PD) System 115
9.3.2 Gaseous Waste Collection and Disposal (WL) System 118

10 INSTRUMENTATION AND CONTROL 121
10.1 General Description 121
10.2 Plant Control Arrangement 121
10.2.1 Introduction 121
10.2.2 Main Control Room 121
10.2.3 Hydraulic Power Supply Room 122
10.2.4 GE Cubicle 122
10.2.5 Emergency Generator Room 122
10.2.6 Forward Control Area 122
10.2.7 Data Acquisition System 122
10.3 Instrumentation 122
10.3.1 Nuclear Instrumentation System 122
10.3.2 Safety System 122
10.3.3 Non-nuclear Instrumentation 123
10.4 Reactor Control 123
10.5 Control Rod Drive System 123
10.5.1 System Description 123
10.5.2 Control Rod Drive Mechanisms 123
10.5.3 System Status as of March 1976 123

10.6 Radiation Monitoring System 124

11 CONDUCT OF LICENSED ACTIVITIES 125
11.1 Organization 125
11.2 Training 126
11.3 Procedures 126
11.4 Records 126
11.5 Quality Assurance Plan 127
11.6 Port Operating Plans 127
11.7 Radiation Protection Plan 127
11.8 Industrial Safety 128
11.8.1 Occupational Health and Environmental Control 128
11.8.2 Personal Protection 128
11.8.3 Lifting and Handling Equipment 128

12 SHIP ACCIDENTS 129
12.1 Introduction 129
12.2 Conventional Ship Safety 129
12.3 Collisions and Allisions 129
12.4 Grounding 130
12.5 Heavy Weather 131
12.6 Fire and Explosion 132
12.7 Flooding and Sinking 133
12.8 Salvage 133

13 RADIOLOGICAL AND ENVIRONMENTAL CHARACTERIZATION 134
13.1 Radiological Characterization Scoping Survey 134
13.1.1 Dose Rates 135
13.1.2 Radiological Contamination 135
13.1.3 Non-Radiological Areas 135
13.1.4 Radiological Areas 136
13.1.5 Reactor Compartment (Secondary Containment) 137
13.1.6 Containment Vessel 138
13.1.7 Estimate of the Quantity and Distribution of Radionuclides 138
13.1.8 Calculation of Total Contamination Inventory 142
13.1.9 Reactor Pressure Vessel (RPV) 144
13.2 Environmental Characterization (HAZMAT) Scoping Survey 145
13.2.1 Asbestos-Containing Material 146
13.2.2 Lead-Based Paint 146
13.2.3 Liquids 146
13.2.4 Polychlorinated Biphenyls (PCBs) 147
13.2.5 Mercury 148
13.3 Updates to Known Radiological Conditions 148

13.4 References 148

14 ACCIDENT ANALYSIS 149
14.1 Overview 149
14.2 Radiation Exposures during Licensed Activities 150
14.2.1 Offsite and Unrestricted Area Exposure 150
14.2.2 Occupational Radiation Exposure 150
14.2.3 Radiation Exposure from Radwaste Transportation 150
14.3 Protective Action Guidelines (PAGs) 150
14.4 Materials Handling Accident 151
14.5 Summary 152

List of Tables

Table 1-1	Chronology of Significant Events	2
Table 1-2	Tank Designation	12
Table 2-1	Principal Characteristics of the N.S. *SAVANNAH*	19
Table 2-2	Compartment Utilization	20
Table 4-1	List of Containment Penetrations	41
Table 6-1	Reactor Internals	58
Table 7-1	Primary System Water Quality	63
Table 7-2	Primary System Radiochemistry	63
Table 8-1	Steam Generator Data	72
Table 8-2	Group Control Centers	83
Table 8-3	480-Volt Power Panels	84
Table 8-4	450-Volt Power Panels	84
Table 8-5	120-Volt Power Panels	86
Table 8-6	Primary System Water Quality	90
Table 8-7	Steam Generator Water Quality	91
Table 9-1	Liquid Drainage and Storage	115
Table 9-2	Double Bottom Tanks below RC	117
Table 13-1	Non-Radiological Area Summary	136
Table 13-2	Radiological Area Summary	136
Table 13-3	Reactor Compartment Radiological Summary	137
Table 13-4	Containment Vessel Radiological Summary	138
Table 13-5	Area Monitoring Results	140
Table 13-6	Sample Analysis Results	141
Table 13-7	Total Surface Contamination Inventory	142
Table 13-8	Steam Generator Dose Rates (primary system side)	143
Table 13-9	Steam Generator Contamination Levels (primary system side)	143
Table 13-10	Volume of water remaining in the Primary Coolant system	144
Table 13-11	Summary of Radioactivity Present	145
Table 13-12	Summary of Radioactivity Present	145
Table 13-13	Radiological Spaces Liquid Sample Summary	147

List of Figures

Figure 2-1	Containment, Reactor Compartment and Engine Room (Frames 99-148)	24
Figure 2-2	General Arrangement – Inboard Profile and Decks - Promenade, A and B	25
Figure 2-3	General Arrangement - Decks - C, D, Flats, Tank Tops and Containment Vessel	26
Figure 4-1	Arrangement of Principal Components in Containment	31
Figure 4-2	Containment Inerting Schematic	36
Figure 4-3	Reactor Compartment	37
Figure 4-4	Containment Vessel (showing the secondary shield)	40
Figure 5-1	Primary Shield Tank	54
Figure 6-1	Reactor Internals	59
Figure 7-1	Plant Arrangement in the Containment Vessel	62
Figure 7-2	Reactor Vessel during Fabrication	64
Figure 7-3	Reactor Vessel	65
Figure 7-4	Steam Generator	66
Figure 7-5	Pressurizer	68
Figure 8-1	Original Electrical Distribution System	80
Figure 8-2	Current Electrical Distribution System 480 VAC	81
Figure 9-1	Double Bottom Tanks below RC	118
Figure 9-2	Double Bottom Tanks	120

FOREWORD TO REVISION VI (2011)

Revision VI to the UFSAR is the 2011 biennial update. This revision incorporates changes based on improved staff knowledge and understanding of the condition of the ship and its infrastructure based on continuous crewing since 2009. Revision VI also incorporates, as appropriate, materials and information contained in license submittals over the past two years. Minor formatting changes are included to clarify the intent and structure of the document.

The ship and its nuclear facilities remain in protective storage. The ship is in an active layberthing condition, with a retention crew and regular attendance by the Maritime Administration's nuclear operations staff. This condition is projected to continue throughout the next two-year biennial UFSAR update period. The updated safety analyses found in this revision apply to all activities within the site boundary (i.e.; all shipboard activities), regardless of how they may be characterized.

FOREWORD TO REVISION V (2009)

Revision V to the UFSAR is the 2009 biennial update. This revision incorporates changes based on improved staff knowledge and understanding of the condition of the ship and its infrastructure based on continuous crewing since 2007. Revision V also incorporates materials and information contained in license submittals over the past two years, including the most recent (April 2008) license amendment (14), the May 2008 Environmental Assessment (EA), and the December 2008 Post Shutdown Decommissioning Activities Report (PSDAR). Minor formatting changes are included to clarify the intent and structure of the document.

The ship and its nuclear facilities remain in protective storage. The ship is in an active layberthing condition, with a retention crew of four persons and regular attendance by the Maritime Administration's nuclear operations staff. This condition is projected to continue throughout the next two-year biennial UFSAR update period. The updated safety analyses found in this revision apply to all activities within the site boundary (i.e.; all shipboard activities), regardless of how they may be characterized.

The near-term focus of decommissioning planning, as described in the EA and PSDAR, is to bring the ship and its nuclear facilities into conformance with contemporary NRC SAFSTOR criteria, and to place the ship into active retention for a period of as much as 15 years before starting DECON and License Termination. This revision provides appropriate safety analyses and bounding conditions for these activities.

FOREWORD TO REVISION IV

Revision IV to the FSAR is intended to provide a 2007 status of the N.S. *SAVANNAH*. It is a complete rewrite of Revision III and includes a summary of numerous documents submitted to the NRC since the last update in 1968, including the most recent (January 2007) license amendment (13).

At the end of 1972, after the ship had been defueled and placed in wet layup status, the Maritime Administration decided not to refuel the ship and return it to service. In effect, this decision made the 1970 and 1971 actions permanent. The final shutdown was in November 1970 and the permanent defueling was completed in fall 1971, these actions are retroactively considered to be permanent cessation of operations. Therefore, the fall 1971 defueling became the de facto permanent defueling and cessation of operations with the issuance of Technical Specification Change 13.

The ship is in a state of protective storage. Most weather openings are sealed. Almost no mechanical system or equipment is functional excepted as noted in the following text. The functional systems include a significant portion of the electrical distribution system, the hull cathodic protection system, the dehumidification (DH) system, the intrusion, fire and flooding alarm system and the anchor windlass. The DH system was newly installed in 1994, and is mechanically independent of any other ship's system. Likewise, the alarm system was substantially renewed in 1994 and is isolated from any other ship's system except electrical distribution. Note that modifications associated with the DH and alarm systems (i.e., vent ducting and cabling) generally obstructs the doorways, passageways and ladders throughout ship as is typical in the marine industry for deactivated ships.

The electrical distribution system, hull cathodic protection system and the anchor windlass are the only currently functional portions of the ship's original outfit. Since 1994, there has been minimal maintenance and testing to the ship's electrical system. Any future use of the electrical system would require surveying prior to energizing any of its currently deenergized portions.

1 INTRODUCTION AND SUMMARY

1.1 Summary of Significant Events

A nuclear merchant ship was first proposed by President Eisenhower in 1955 as evidence of this country's interest in the peaceful uses of atomic energy. In 1956, Congress authorized the program in Public Law 848, 84th Congress, which provided funds for the design and construction of a vessel, subsequently named the N.S. *SAVANNAH* (NSS).

On October 15, 1956, the President directed the Atomic Energy Commission (AEC) and the Maritime Administration (MARAD) to proceed with design and construction. To complement this effort, the entire project was placed under the direction of a dual status staff chosen jointly by MARAD and the AEC. The vessel was designed by George G. Sharp, Inc. Naval Architects of New York. The Babcock and Wilcox Company (B&W) was awarded a fixed price contract for the design and construction of the nuclear power plant auxiliaries. The New York Shipbuilding Corporation (NYS) was selected to construct and test the ship at their Camden, New Jersey shipyard. In 1958, the States Marine Lines, Inc. was engaged as the operating agent for the ship. Todd Shipyard Corporation was chosen to provide the maintenance facility in May 1960. In 1963, American Export Isbrandtsen Lines Inc. (AEIL) became the operating agent. The initial operating License was issued in August 1965. First Atomic Ship Transport Inc., (FAST) a subsidiary of AEIL, placed the NSS in routine cargo service in September 1965.

The NSS, a vessel of the P-2 class (specifically P2-Nl-MA40a) was powered by an 80 MW_{th} pressurized-water nuclear reactor and had a design speed of 22 knots at 22,000 shaft horsepower. The normal cruising speed was 20.25 knots at 20,000 shaft horsepower. The ship was intended to promote international goodwill by being displayed in the seaports of the world. Consequently, it was made as attractive and modern as any vessel of that era and its nuclear power plant was designed with an exceptional degree of reliability and safety.

The prime objectives of the creators of the NSS were to demonstrate the advanced technology and peaceful use of nuclear energy. The operation of a working test-bed laboratory ship provided a tool to be used in the development of economical ships and marine reactor operation. It also established acceptable standards for the design of ship and reactor, operating practices, manning, port entry and operation and safety of crew and the general public. It was necessary therefore, that entry into the domestic and foreign ports was in accordance with mutually acceptable regulations and operational procedures. The successful culmination of these objectives led to the general acceptance of the NSS's safety and reliability by governmental authorities, cargo shippers and the general public.

During its operating phase, regulatory procedures, inspection standards and training requirements were improved and implemented. The relation of manning to the ship's layout, design and service was studied. The high degree of safety, reliability and performance of the NSS increased an acceptance of nuclear ships in the ports visited.

A chronology of significant events in the NSS program is shown in Table 1-1.

The NSS completed its program of domestic and foreign port visitation in March 1965. From that time until July 1970, the ship was in commercial cargo operations. The ports visited are listed in Table 1-2.

During the period of 1968 through 1970, future use options for the ship were studied and proposed. These included the following:

Conversion to:	Proposed by:
Fish Protein Concentrate Factory Ship	Marine Protein Incorporated
Ocean Science Ship	Westinghouse Electric Corp.
Marine Nuclear Training Center	Todd Shipyards Corp.
Containership including new Reactor and Steam Generators	AEIL

These options were ultimately rejected, and the ship was removed from service. The ship was permanently shutdown and placed in wet layup in November 1970. In Fall 1971, the nuclear plant was permanently defueled. In March 1976, the ship's primary, auxiliary, and secondary systems were drained as completely as practical.

The ship was bareboat chartered[1] to the Patriots Point Development Authority and berthed at the Patriots Point Naval and Maritime Museum, Mt. Pleasant, SC from 1981 through 1994. The ship was dry docked in Baltimore, MD for hull maintenance and preservation in 1975 and 1994. From 1994 to 2006, the ship was moored at the James River Reserve Fleet, Ft. Eustis, VA. In August 2006, the ship was moved to Colonna's Shipyard, Norfolk, VA for infrequent, required topside maintenance.

The NSS is one of the most historically significant ships in existence. It is one of the first ships to be registered as a National Historic landmark. It is registered as an International Historical Mechanical Engineering Landmark by the American Society of Mechanical Engineers. It is a registered landmark of the American Nuclear Society.

Table 1-1 Chronology of Significant Events

April 1955	President Eisenhower announced a proposal to build a nuclear powered merchant ship to demonstrate peaceful uses of the atom.
July 30, 1956	Congress passed P.L. 848, 84th Congress, authorizing construction of a nuclear powered merchant ship.
October 1956	Contract to Babcock & Wilcox to design and construct the reactor.
January 22, 1957	MOU established between MARAD and AEC to perform tasks related to design development, testing, initial operation and international acceptance of nuclear merchant ships.
April 1957	Contract to George Sharp to design hull.
December 10, 1957	Contract to New York Ship building to construct ship.
May 22, 1958	Keel laid.

[1] A bareboat charter is an arrangement where the owner gives possession of the ship to the charterer but no crew or provisions are included as part of the agreement. The charterer is responsible for all operating expenses.

Table 1-1 Chronology of Significant Events

September 1958	Contract signed with States Marine Lines, to operate ship under General Agency Agreement (AEC and MARAD).
July 21, 1959	Ship launched, crew training began.
May 1960	Selection of Todd Shipyard Corporation for nuclear maintenance.
July 1960	Component testing started.
November 1960	Systems testing started.
March 1961	Public hearing.
July 24, 1961	Authorization of AEC fueling and operation for test and demonstration purposes.
September 1961	Pre-fueling testing complete.
November 11, 1961	Reactor Core installed.
December 21, 1961	Initial criticality.
1961	U.S. Coast Guard Certificate of Inspection issued (Doc. No. 287392), Passenger Nuclear.
January 1962	10% testing complete.
March 1962	Initial sea trials at Camden, NJ and Yorktown, VA.
April 19, 1962	States Marine Lines (Operator) under General Agreement.
May 1, 1962	Delivered to and accepted by the Government.
August 3, 1962	AEC provided interim sea and port operation authorization. Amended November 19, 1962 and May 1, 1963.
August 1962	Commencement of initial voyage. First voyage to commercial port Yorktown, VA to Savannah, GA. Demonstration phase of operations began with voyage from Savannah, GA to Norfolk, VA.
February 1963	Initial voyage complete.
May 1963	Cancellation of General Agent contract with States Marine Lines, Inc.
May 1963 to Spring 1964	Labor dispute halted operations.
June 1963	New staff formation.
July 23, 1963	New Contract signed with American Export Isbrandtsen Lines (AEIL) to operate ship under General Agency Agreement from 1964-1965 (New crew trained).
February 20, 1964	AEIL sea trials.

Table 1-1 Chronology of Significant Events	
1964	Demonstration phase continued (May 1964) voyage from Galveston to East Coast, U.S. ports.
1964-65	Called at U.S. and Western European ports.
May 28, 1964	Resume port operation.
March 1965	Port visitation program complete and demonstration phase ended Mobile, Alabama to Galveston, TX for annual drydocking, maintenance and inspection.
May 11, 1965	First Atomic Ship Transport, Inc. (FAST) and AEIL agreement to operate as a commercial cargo freighter.
May 18, 1965	USCG Certificate of Inspection Renewed as Cargo Nuclear.
August 1965	AEC Operating License (NS-1) issued.
August 1965	Experimental commercial operations began. Bareboat chartered to First Atomic Ship Transport, Inc. (FAST) (a subsidiary of AEIL).
September 1965	Begin scheduled commercial operation.
August to October 1968	Commercial marine refueling at MARAD Refueling Facility, Todd Shipyards, Galveston, TX. The "fuel shuffle" was intended to extend the life of Core I. At the end of Core I lifetime, a shuffle operation was conducted to configure Core Ia. In this operation the four center elements were removed and replaced with four spare elements, two of 4.6% enrichment and the other two of 4.2%. The remaining 28 elements were rearranged to increase reactivity. In general, the inside elements were moved out and the outside elements were moved in. Additionally, one control rod was replaced. During the last voyage before the Fuel Shuffle Outage, evidence of a minor fuel failure was detected. It appeared that small amounts of fission products were released to the primary coolant whenever there was a significant change in reactor power level. Post shuffle operation indicated that the situation still existed; however, it did not limit operation or access anywhere on the ship.
January 1, 1970	The National Environmental Policy Act of 1969 requires Environmental Impact Statements for proposed actions. Past actions such as the initial NS-1 operating license are exempt.
July 25, 1970	Commercial Operations ended. During experimental commercial operation August 1965 - July 1970, 32 domestic ports and 45 foreign ports were visited. NSS berthed at Pier "E" Todd Shipyards, Galveston, TX and Reactor Shutdown July 29, 1970.
November 6-8, 1970	Final Voyage to Pier "E" Todd Shipyards, Galveston, TX from annual drydocking 10/30 through 11/06 at Todd Shipyards, New Orleans, LA for maintenance per Operations Report, FAST-21 April 26 - November 9, 1970.
November 8, 1970	Final Reactor shutdown at 5:50 PM and established Cold Iron condition at

Table 1-1 Chronology of Significant Events

	Todd Shipyard, Galveston, TX per FAST-21.
November 9, 1970	License NS-1 transferred from FAST to MARAD (License Amendment 7).
April 13, 1971	AEC approved Technical Specification Change 11 to defuel NSS.
Fall 1971	Ship at MARAD Refueling Facility, Pier "E" Todd Shipyards, Galveston, TX, for preparation of vessel for lay-up. Started removing fuel August 23, 1971. The last fuel element was removed September 29. Control rod drive (CRD) system disabled and sealed plates installed on 21 CRD head nozzles to separate drives from the control rods. 36 Fuel element flow nozzles were loaded into fuel channels in the reactor vessel. One control rod (cut into two six feet long pieces and one twelve inch piece) was placed in reactor vessel. This is the control rod removed during the 1968 fuel shuffle. RCP motors and impellers were removed. The RCP volutes were blank flanged. Reactor, secondary and saltwater system filled with water to establish wet lay-up conditions. The reactor vessel head was reinstalled with 6 of the normal 48 studs in place. The containment vessel, port and starboard charge pump room and lower reactor compartment bilges were decontaminated, washed, vacuumed and painted. All cargo holds were decontaminated.
October 24, 1971	U.S. Coast Guard Certificate of Inspection expired and was not renewed.
December 3, 1971	Permanent cessation of operations established by completing Layup Procedure LU-9. The Layup Procedure LU-9 is the procedure implemented by the defueling team. It reinstalled the reactor vessel head with six tensioned reactor head studs. This event establishes the date of permanent cessation of operations.
January 3-10, 1972	Towed to Savannah, GA and following a welcoming celebration, additional non nuclear layup work was performed (4/24/1972 Operations Report) [Not open to Public and primary system and steam generators (boilers) maintained in wet lay-up (MARAD letter Nov 19, 1971)].
April 4, 1972	AEC stopped review of Core II and noted "If reactivation of N. S. *SAVANNAH* should become planned, an appropriate scope of review would need to be established in light of … the regulatory safety and environmental requirements at that time."
November 3, 1972	All 36 Core I Spent fuel elements (32 plus the four replaced during the fuel shuffle) were transferred by AEC for reprocessing in SC.
January 29, 1973	License Amendment (Technical Specification Change 13) eliminated "Technical Specifications that referred to operational aspects since all nuclear fuel has been removed from the ship and the nuclear power plant (and the ship) is no longer operational." Note that even though the final shutdown was in November 1970 and the permanent defueling was completed in fall 1971, these actions were not considered to be permanent cessation of operations until the decision was finally made to not load Core II. Therefore, the fall 1971 defueling became the de facto permanent defueling and

Table 1-1 Chronology of Significant Events

	cessation of operations with the completion of Layup Procedure LU-9 on December 3, 1971.
1972-75	Legislation was introduced to authorize the Secretary of Commerce to transfer ship to the City of Savannah, GA.
January 31, 1975	MARAD memo "Supplemental Memo on *Working Document: Environmental Impact Analysis Nuclear Merchant Ship Program*" -MARAD recommended moving Core II from storage at Defense Atomic Support Agency, Killeen, TX to Nuclear Weapons and Storage Facility, Manzano Air Force Base, Albuquerque, NM for indefinite storage. This action would be taken via an Interagency Agreement by Energy Research and Development Administration (ERDA) (formerly AEC). Per NSS Defueling Log September 9, 1971, (MMA File 61-8), Core II consists of 36 new fuel elements.
April 3, 1975	Attachment 1 to memo for Assistant Administrator for Commercial Development states "In response to M-700 memo of December 23, 1974, … 5. Nuclear Fuel (Core II) it is understood this fuel will be returned to AEC [ERDA]."
July 28, 1975	City of Savannah, GA requested removal of the ship and the ship left Savannah, GA for Baltimore, MD drydocking.
August 11, 1975	Moved from Baltimore, MD Drydock to Detyens Shipyard, Inc. Charleston, SC (topside work).
August 29, 1975	Moved from Detyens Shipyard, Charleston, SC to N. Charleston Army Depot, SC pending the outcome of legislation before the Congress to permit use of the NSS as an addition to the Patriots Point Naval and Maritime Museum, Mt. Pleasant, SC.
March 1976	While at N. Charleston Army Depot, SC, the primary, auxiliary and secondary systems were drained by Todd Research and Technical Division as completely as practical. Per the September 14, 1976, Annual Operations Report, water from the reactor vessel shield water tank and secondary side of the steam generators was transferred to a double bottom tank below the reactor compartment. Demineralizer resins (28 Ci) and 12,200 gallons of liquid (Primary Coolant and liquid waste) were properly disposed. Three dewatered primary purification ion exchangers (demineralizers) were removed and disposed. Radiation levels in the containment vessel did not increase appreciably after the water was removed. Per March 9, 1976 MARAD memo "Status Report on the Transfer of N.S. *SAVANNAH* to [James River Reserve Fleet] JFFR," the water from the secondary system was analyzed and does not have to be disposed of as nuclear waste.
May 19, 1976	Possession Only License issued (License Amendment 8) and recognized the ship was in a state of protective storage. Total estimated residual activity

Table 1-1 Chronology of Significant Events

	1.09E+5 Ci.
April 1980	Main reduction bull gear was removed (NRC Inspection Report 81-01, March 2, 1981).
August 28, 1980	Public law 96-331 was enacted to authorize the NSS to be sent to Patriots Point, Mt. Pleasant, SC for use as a Museum and other public purposes.
September 24, 1980	Bureau Radiological Health, SC Department of Health & Environmental Control certifies all ten remaining radioactive sources have been transferred from the ship to them.
August 14, 1981	Patriots Point Development Authority (PPDA) became a co-licensee and the ship was bareboat chartered for public display at the Patriots Point Naval and Maritime Museum, Mt. Pleasant, SC from 1981 through 1994.
October 15, 1983	The American Society of Mechanical Engineers designated the ship as the Fourteenth International Historic Mechanical Engineering Landmark.
July 15, 1986	The NS-1 License was renewed for ten years by License Amendment 11.
September 1989	Hurricane Hugo hits the Charleston, SC area.
July 17, 1991	The National Park Service designated the ship as a National Historic Landmark.
October 1991	The Board of Directors for the American Nuclear Society approved the ship for a Nuclear Historic Landmark Award.
July 1991	Shortly after the second bareboat charter renewal in 14 July 1991, a hull leak developed. After a series of surveys and inspections, funding was requested from Congress in 1993 to drydock the ship to correct deterioration of the underwater hull.
December 1993	Public Tours of the ship were no longer allowed.
May 24, 1994	NSS left Patriots Point on the spring flood tide to minimize silting effects from Hurricane Hugo of September 1989.
June 29, 1994	License Amendment 12 removed PPDA as co-licensee. After routine drydocking and hull maintenance in Drydock # 4, Sparrows Point, Baltimore, MD, the ship was placed in protective storage at the James River Reserve Fleet, Ft. Eustis, VA. Numerous minor modifications including installation of a DH system were completed. Modifications associated with the DH system (i.e., vent ducting and cabling) generally obstructs the doorways, passageways and ladders throughout ship as is typical in the marine industry for deactivated ships.
July 29, 1996	License Renewal was no longer required by the revised 10 CFR 50.51, Continuation of license. (b) Each license for a facility that has permanently ceased operations, continues in effect beyond the expiration date to authorize ownership

Table 1-1 Chronology of Significant Events

	and possession of the production or utilization facility, until the Commission notifies the licensee in writing that the license is terminated.
August 15, 2006	NSS was moved to Colonna's Shipyard, Norfolk, VA for infrequent, required topside maintenance.
December 11, 2006	Post Shutdown Decommissioning Activities Report, Revision 0 was submitted but withdrawn on January 27, 2007.
January 30, 2007	NSS moved to Pier 23 Newport News, VA for temporary layberthing.
January 31, 2007	License Amendment 13 was issued. It included six administrative changes. The most significant change is following 30 day notification to NRC, the ship can be located at any appropriate U.S. domestic location with a MARAD approved Port Operating Plan.
May 31, 2007	NSS was moved to BAE Systems Norfolk Ship Repair facility in South Norfolk, Virginia in preparation for drydocking. On January 19, 2008, the NSS was placed onto the Titan Drydock and remained there until March 3 for hull maintenance and exterior surface cleaning and preservation. Hull inspections were conducted and identified no new degradation. These inspections included verifying the integrity of the underwater hull repairs made during the 1994 drydocking availability
April 3, 2008	License Amendment No. 14 was issued. It revised the Technical Specifications to match the current ship status and ship's programs, policies and procedures. The function of Review and Audit Committee was revised commensurate with the Decommissioning Quality Assurance Plan. The committee was renamed the Safety Review Committee.
May 8, 2008	NSS was moved to Pier 13, Canton Marine Terminal at 4601 Newgate Ave., Baltimore, MD.
December 11, 2008	Post Shutdown Decommissioning Activities Report, Revision 1 submitted.
November 2010	Completed the electrical modifications to deenergize all originally installed 450 volt switchgear. All required 450/480 volt loads were moved to a new 800A Shore Power Switchboard.

1.2 Principal Safety Features of the Ship

1.2.1 The Hull

This text is retained from Revision III for historical context. In particular, items (1), (3) and (4) from the list below describe structural features installed on the N.S. *SAVANNAH* to enable it to resist the effects of damage. Item (2) describes the hydrodynamic standard applied to allow the ship to passively resist the effects of damage and remain afloat; this condition is referred to as "damaged stability." During the period of museum operations at PPDA, most of the transverse watertight bulkheads listed in (1) were penetrated at various locations to permit convenient personnel access

and service connections between the compartments. Most of these penetrations were closed prior to the ship's removal from PPDA in 1994. Current operations only require the NSS to meet "intact stability" requirements, where intact stability refers to the capability of the ship to remain stable when not damaged. Based on stability calculations prepared in 1994 and the current (2008) baseline structural condition assessment, the NSS is presumed capable of meeting a "one compartment" damaged stability standard

For a ship of its generation, the hull design of the N.S. *SAVANNAH* was that of a conventional vessel with trim and modern lines, designed in accordance with the latest practice in naval architecture and hydrodynamics.

The principal safety features in the hull design may be summarized as follows:

1. The hull is divided by 10 watertight bulkheads terminating at the B-deck level.
2. The ship will remain afloat if any two of the nine compartment are flooded within the meaning of U.S. Coast Guard (USCG) stability requirements.
3. Conventional all-welded steel construction is employed with full-continuity of structural members, except for a few longitudinal riveted seams serving as crack arresters in accordance with contemporary practices.
4. A 5-foot deep watertight double-bottom extends under all nine compartments but not under fore peak or after peak ballast tanks.
5. Special care was taken in the selection of materials to minimize galvanic corrosion.
6. The reactor compartment is reinforced outboard of the containment vessel with additional longitudinal and athwartship bulkheads, in addition to a laminated redwood and steel collision mat on each side, to minimize penetration in the event of a collision amidships.
7. The design details and construction of all components and systems was in accordance with the contemporary regulations of the Safety of Life at Sea Convention (SOLAS), MARAD, USCG, the U.S. Public Health Service, the American Bureau of Shipping (ABS) and other regulatory bodies.

1.2.2 The Power Plant

From the beginning of the project, analyses of hypothetical casualties and topical reports covering every phase of the design were prepared and reviewed by the regulatory agencies as well as Oak Ridge National Laboratory (ORNL). In addition, a comprehensive analysis of reactor safeguards was prepared for review by the AEC and for the critical examination of the AEC's Advisory Committee on Reactor Safeguards (ACRS).

1.2.2.1 General

In the design and construction of the power plant, a special philosophy of safety and reliability was adopted at the outset of the project. Both preparatory and concurrent research and development work and special operational testing were undertaken in many areas, including a series of critical experiments on various configurations and designs for the reactor core, full scale testing of a prototype control rod drive mechanism and system under simulated reactor conditions, irradiation tests of fuel elements and pellets, containment vessel leak rate tests and filter efficiency tests.

1.2.2.2 Particular Safety Features

The NSS has four remaining safety features in the power plant design that merit special mention:

1. Reactor System Containment - The reactor and primary coolant system are located inside a containment vessel. During the operating period, any failure of the primary system would have been contained by the containment vessel system. The CV system, consisting of a USCG approved pressure vessel and associated isolation valves, was designed and hydrostatically tested to withstand a pressure of 173 psig. During the operating period, the system was routinely pneumatically tested at 60 psig and demonstrated to have a leak rate of less than 1.2% of the contained volume per day. No integrated leak rate testing has been performed since the final shutdown in November 1970.
2. Containment Vessel Isolation – During the operating period, the reactor system was operated with the CV hermetically sealed at all times. The penetrating pipe lines were isolated by automatic valves if the pressure inside the containment vessel rose above 5 psig for any reason whatsoever. The steel containment vessel, moreover, was sufficiently thick that no danger of penetration existed from any high speed missiles within the containment vessel, such as a thermocouple well from the primary coolant system. No individual penetrations have been leak rate tested since the final shutdown in November 1970.
3. Radioactive Waste Control - During the operating period, the power plant operated with a minimum of radioactive waste disposal. Gaseous and liquid wastes were discharged in accordance with the "Standards for Protection Against Radiation" (10 CFR Part 20) and the Technical Specifications. Any solid wastes are kept aboard the ship and periodically discharged to a licensed waste disposal facility.
4. Shielding – During the operating period, the reactor vessel was surrounded laterally by 33 inches of water and 1 to 4 inches of lead shielding so that maintenance work was possible shortly after shutdown. In 1976, the reactor vessel shield water tank was drained. The secondary shielding around the containment vessel reduced the surface dose level at full reactor power to no more than 100 mR per week.

1.3 Ship and System Status – 1976 to Present

1.3.1 Power Plant Status as reported in April 1976

In support of the request for a possession only license in 1976, MARAD provided a "current" (i.e., contemporary) status of the ship. The April 1976 status of the NSS reactor plant following protective storage modifications to its operating condition was noted as follows:

1. Reactor Vessel - All 32 Core Ia fuel elements were removed from the reactor vessel to the spent fuel pool at the MARAD Refueling Facility, Todd Shipyards, Galveston, TX [License SNM-1015-YGP (Docket 70-1062)]. All reactor internal components are in place, i.e., core basket, upper grid plate, upper flow baffle. Thirty-six upper flow transition pieces and one irradiated control rod (cut in three pieces) have been loaded into six fuel element channels in the core basket. Thirty-two upper flow transition pieces were from Core I and four were from Core Ia (i.e., the 1968 fuel shuffle). The additional control rod was the one replaced during the 1968 fuel shuffle. The reactor head is in place with six of the original 48 reactor head hold down studs tensioned.
2. Spent Fuel - Per September 21, 1973, Operations Report, thirty six spent fuel elements (Core I and Ia) were shipped from Galveston, TX to USDOE - Savannah River Plant, Aiken, SC in nine

shipments from October 4 through December 21, 1972 via a lowboy trailer using the Piqua/Elk River Shipping cask.

3. Fission Chambers - Per September 21, 1973, Operations Report, five fission Chambers were removed and shipped to Todd Shipyards, Galveston, TX in May 1973. On June 28, 1973, these five and an additional three stored on the NSV Atomic Servant (the nuclear services barge for NSS) were shipped to Chem-Nuclear Systems, Inc., Barnwell, SC for disposition as radioactive material.

4. Pressurizer - One relief valve PR-1V was removed. The nozzle flange was fitted with an absolute filter vent to allow for pressure equalization. Circuit breakers for the heaters have been opened at the switchboard.

5. Control Rod Drive System -

   a. Electrical - The breakers for the rod drives have been opened and tagged in the Control Rod Drive Electrical Cubicle and the Control Room. The cables between the junction boxes on the Control Rod Drive (CRD) structure and the junction boxes located around the periphery of the cupola have been disconnected, coiled and secured on the CRD structure in the containment vessel. The support wireways have been removed, packaged and stored in Hold No. 4. In addition, the twenty one buffer seal flow meter cables and the vibration monitor cables have been disconnected.

   b. Mechanical - All hydraulic oil has been drained and the piping disconnected between the cupola and the CRD structure. Buffer seal system valves have been closed and tagged out. The inlet and outlet header spool pieces between the cupola and structure were removed. The buffer seal system has been drained.

      The 21 control rods were disconnected from their respective CRD extension shafts and remain in their fully inserted position between the empty fuel location channels. The CRD extension shafts have been disconnected from the lead screw and are in a fully inserted position from the reactor head nozzles to the top of the control rods. The CRD lead screws were withdrawn and pinned in place. Steel caps are placed onto the 21 reactor head nozzles to completely seal the nozzle from the containment vessel atmosphere and mechanically separate the CRD mechanism from the control rod.

6. Primary Coolant System - The system has been drained as completely as practical. All loop isolation inlet and outlet valves are open and back seated.

   Primary Pump motors and impellers were removed. Blank flanges are installed over the volute openings. The grating, piping, valves, ducting, etc. that were disconnected while removing the pump motors and impellers are left in the removed condition within the containment vessel.

7. Secondary System - Both steam generators and piping were drained of water as completely as practical. The water on the secondary side of the steam generators was transferred to the double bottom tank below the reactor compartment. The isolation valves outside of the containment vessel are closed. There have been no modifications to the secondary system.

8. Auxiliary Systems - All nuclear related auxiliary systems have been drained as completely as practical.

   The auxiliary system tanks listed in Table 1-2 have been drained of liquids. Some still retain non-removable surface contamination.

   The three primary purification system ion-exchangers (PP-E1, PP-E2 and PP-E3) and their resins (28 Ci) have been physically removed from the ship and their lines capped.

   Water from the primary (neutron) shield water tank was transferred to the double bottom tank below the reactor compartment.

Table 1-2 Tank Designation
SL-T1 - Buffer Seal Surge Tank
PD-T1 - Lab Waste Tank
PD-T2 - Makeup Storage Tank
PD-T3 - Makeup Storage Tank
PD-T4 - Containment Drain Tank
PD-T5 - Double Bottom Tank
PD-T6 - Double Bottom Tank
Primary (Neutron) Shield Tank
PR-T1 - Effluent Condensing Tank

9. Containment Vessel - The forward and aft manway shield plugs were put in place with security seals installed. Containment vessel (CV) entries were expected to be made through the aft airlock. The lifting chains and hooks were removed from the chain hoists used to handle the shield plugs to minimize the possibility of unauthorized containment vessel entry. The CV bilge was wiped clean. The inerting piping in the CV cupola head was disconnected outside and valves closed so that the integrity of the vessel was maintained.

10. Control Areas - The following areas of the ship are controlled by locking because they contain radioactive systems or components:

    Secured boundaries were established to prevent unauthorized access into Radiation Control Areas (RCAs). The secured entrances included the following spaces:

    a. The reactor compartment surrounding the containment vessel that originally formed a secondary containment around the pressure containment;

    b. The Port and Starboard Stabilizer rooms;

    c. The Forward Control which includes on C-Deck the Cold Water Chemistry Lab (Port) and Radiation Sampling Room plus on D-deck the Gas Adsorption Equipment Room (port) and Radiation Sampling Room (stbd);

    d. The Port and Starboard Charge Pump rooms; and,

    e. The Hot Chemistry Laboratory, in the Control Room Area.

    When not in use, the entries to all of the above spaces are kept locked and are free of surface contamination (less than 450 ρCi/100 cm^2) except for the interior of the containment vessel and lower reactor compartment. The containment vessel, port and starboard buffer seal charge pump room and lower reactor compartment bilges were decontaminated, washed, vacuumed and painted in Fall 1971 as part of defueling.

    A complete survey was made on the ship after removal of the primary system water and demineralizers (ion-exchangers). Radiation levels in the containment vessel did not increase appreciably after the water was removed.

    All loose radioactive material (components and solid waste) was removed from the ship. At present, there is no radioactive or contaminated material outside of control areas.

The calculated residual radioactivity remaining in the plant as of April 1976 as listed below:

Source	Activity
Activated components within the Reactor Vessel	108486 Ci
Corrosion and Fission products plated out throughout the system	16.6 Ci
Total Estimated Residual Activity	108513 Ci

11. All of the hull openings have been welded closed. The only hull opening with the potential for a leakage path is the main propeller shaft bearing in the stern tube. *(2009 -Note that as part of the 2008 drydocking work, the stern tube opening was permanently sealed and capped after removal of the tail shaft and propeller.)*

1.3.2 Status of N.S. *SAVANNAH* from April 1976 – April 2009

During the intervening years, the ship has remained in a state of protective storage.

In 1981, the NSS was bareboat chartered to the Patriots Point Development Authority (PPDA) of the State of South Carolina, for public display at the Patriots Point Naval and Maritime Museum, near Charleston, SC. During that period the PPDA was designated a "co-licensee" for the reactor and exercised custody of the ship - but ownership remained with MARAD.

Shortly after the second bareboat charter renewal in 1991, a hull leak developed. After a series of surveys and inspections, it was concluded in 1993 that deterioration of the underwater hull body necessitated a drydocking, for which funding was requested from Congress. Unrelated to the underwater hull issue was internal deterioration from excessive water intrusion from the upper decks. The water intrusion condition began with Hurricane Hugo in 1989 and gradually worsened over time. In light of these issues and the effects they had on use of the ship, PPDA informally notified the Agency that it would exercise its right to terminate the charter effective with the ship's removal for drydocking.

Museum operations ended in early 1994, when industrial topside and internal repairs commenced in preparation for the drydocking and subsequent transfer of the NSS to a reserve fleet. The NSS was removed from the museum site on May 24, 1994 and in June 1994 was drydocked in Baltimore, MD for hull maintenance and repair. Extensive repairs to deteriorated underwater hull plating were completed, and in July 1994 the NSS was placed in the Agency's James River Reserve Fleet (JRRF) at Fort Eustis (Newport News), VA. License Amendment 12 was issued in July 1994, and among other things removed the PPDA as a co-licensee, and established the vessel's location as the JRRF. The NSS remained in protective storage there until August 15, 2006.

To prepare the ship for layup at JRRF, a number of conventional preservation measures were put into place. These included fitting a Dehumidification (DH) system to preserve the ship's interior, renovations to the Impressed Current hull Cathodic Protection (ICCP) system, and overhaul of the ship's existing fire, flooding and intrusion alarm systems. These modifications included long runs of portable ductwork and electrical cabling which generally obstructed the doorways, passageways and ladders throughout ship. Externally, deck drains were blanked off to reduce water intrusion into the ship's interior. No funds were available to correct the interior water damage effects; however, the DH did arrest any further degradation.

In preparation for, and during the lay-up period at the JRRF, no changes were made to radiological surveillance or monitoring plans and no substantive radiological work was performed. Radiological

work consisted exclusively of passive surveillance and monitoring in accordance with the circa 1981 surveillance plan. Only minimal modification, maintenance and testing of the alarm and monitoring systems required by Technical Specifications ("TS") were performed.

In March to May 2005, a radiological and environmental characterization scoping survey of the NSS was conducted. Based on initial results of the survey, intrusive sampling and analysis was conducted on the reactor pressure vessel and related components. This sampling found that those components can be disposed of as Class A radioactive waste material at qualifying radioactive waste disposal facilities.

In May 2005, MARAD completed an internal reorganization in which resulted in reestablishing the *SAVANNAH* Technical Staff (STS). The STS is now the organizational unit within MARAD that is responsible for all NSS program activities.

The Maritime Administration's Senior Technical Advisor (STA) has overall responsibility for administration of the NS-1 license and will provide guidance and oversight to the Manager–N.S. *SAVANNAH* Programs (MSP). The MSP is responsible for the execution of all program activities including routine radiation surveillance, ship custody decommissioning and historic preservation. MARAD may assign a single incumbent to both positions. This individual is assisted by a Decommissioning Program Manager, a Documentation Manager and a Facility Site Manager.

A significant portion of the decommissioning project work is intended to be performed by contractors. MARAD personnel, reporting directly to the MSP, will be responsible for assigned contractors and providing the contractor direction, coordination and interfacing communications.

In May 2006, further organizational enhancements were made. Consultants were contracted to fill the roles of Radiation Safety Officer, Quality Assurance Manager, Risk Manager and Licensing and Compliance Manager. The QA Manager will provide independent verification of contractors and the contractor's QA Manual which will be approved by the NSS Project. Individuals from the Argonne National Laboratory and the Volpe National Transportation Systems Center were contracted to provide additional expertise in Decommissioning Environmental and Maritime issues.

On August 15, 2006, the NSS was moved to Colonna's Shipyard, Norfolk, VA for infrequent, required topside maintenance. On January 30, 2007, the NSS was moved to Pier 23, Newport News, VA to prepare for drydocking.

On May 31, 2007, the NSS was moved to BAE Systems Norfolk Ship Repair facility in South Norfolk, Virginia in preparation for drydocking.

In 2007, MARAD continued its on-going efforts of improving the technical capabilities of the *SAVANNAH* Technical Staff (STS) and filled the following positions with nuclear and/or maritime experienced staff:

- Nuclear Advisor;
- A Partial Ship's Crew - typically comprised of the following:
    - First Engineer;
    - Electrician; and,
    - Two General Vessel Assistants.

The result of this increase in staffing allows the ship to be routinely manned during a normal work week. This increase in staffing continues to foster improvement in the physical and administrative aspects of the NSS programs.

On January 19, 2008, the NSS was placed onto the Titan Drydock at BAE Systems Norfolk Ship Repair. The NSS remained there until March 3. In addition to the routine need to inspect and repair the ship's underwater hull, MARAD used this maintenance availability to perform a comprehensive assessment of the physical condition of the ship's primary structure and exterior envelope.

As part of the assessment, MARAD entered into an agreement with the American Bureau of Shipping (ABS) to return the ship to hull classification. The ABS will provide independent monitoring and review of the ship's structural condition.

At the previous drydocking availability in 1994, extensive repairs were made to the underwater hull by clad-welding deep pits; renewal of several hundred linear feet of welded butts and seams; and installation of steel doubler plates over four areas of generalized erosion and pitting at the "wind and water" interface.

These repairs were subjected to intense survey and inspection by ABS and STS during the 2008 drydocking. All of the repairs were found to be in satisfactory condition. Three of the doubler plates were removed, and several of the underlying locations were inserted with new steel plates. The fourth doubler plate is located adjacent to the Cold Chemistry Laboratory, and was thus not removed because of the need to dismantle the laboratory equipment (with requisite radiological controls) to provide access for the required hot work in that area.

No record of ballast tank or other innerbottom tank inspections was found for the 1994 or the preceding 1975 drydocking availabilities. Consequently, planning for the 2008 drydocking availability included inspection and survey of all innerbottom and ballast tanks. All tank surveys and inspections were completed, except for ballast and innerbottom tanks within the Reactor Compartment and the number 4 centerline ballast tank[2]. Ultrasonic thickness gaugings were taken of the cargo hold tank tops (a principal structural member of the ship), and the ship's exterior hull structure. Additional gaugings were taken adjacent to each cargo hatch opening in the main deck; on the cargo hatch covers themselves, and at selected areas of structural concern and interest. The results were satisfactory.

The entire exterior surface of the ship was prepared by waterjetting. The underwater hull, freeboard and main deck areas were prepared to bare steel, with all previous and original coating materials removed. A new high performance epoxy coating system was applied, with high gloss acrylic urethane topcoat. The underwater hull received one coat of conventional anti-fouling coating. Other areas of the topside exterior were prepared to a slightly lesser standard, with some original coating materials left intact. All previously existing hydraulic oils and similar materials were removed from non-functioning deck equipment, to minimize the risk of discharge of such materials into the environment.

The exterior envelope of the ship forms the perimeter boundary for licensed activities. Maintenance of the envelope ensures that the nuclear facilities housed inside the ship are protected. Based on the review of available records, it is surmised that the 2008 drydocking was the first comprehensive examination of the ship's structural fabric since 1967, when the ship underwent "Special Survey No. I" for the ABS.

---

[2] The No. 4 centerline ballast tank is filled with water containing chemical compounds of indeterminate origin. The tank will be inspected at a future date after the water is processed and discharged. Structural inspections were completed of the exterior of the tank boundaries and found satisfactory.

Major drydocking work completed:

- Underwater hull cleaning, surface preparation and coating;
- Inspection and repair of 1994 hull repairs;
- Freeboard preservation from deep loadline to top of the rails;
- Topside and superstructure preservation including weather exposed decks;
- Audio gauge exterior hull, decks, superstructure, tank tops and tanks;
- Cathodic protection system; service and repair;
- Removed ship's propeller and stored it on No. 7 cargo hold hatch cover;
- Permanently sealed and capped the stern tube opening after removal of the propeller;
- Examined, tested and repaired (as required) all hull blanks;
- Examined and repaired as required bilge keel and bilge strake rivets;
- Performed miscellaneous steel renewals, as needed, to side shell, bottom and main deck plating;
- Removed ceramic tiles and magnesite underlayment from the Promenade Deck to permit inspection, repair and coating of underlying steel decks;
- Internally inspected double bottom ballast tanks, forward and after peak tanks, No. 1 Deep Tank, and various voids and pipe tunnels;
- Replaced the weathertight seals on main deck hatch covers at cargo holds 1, 2, 3, 4 and 7.

In summary, the structural condition of the ship was found to be very good. In particular, the innerbottom structure was found to have little-to-no structural degradation, and the original tank coatings were found intact and serviceable. All major hull strength components were inspected, repaired if necessary, and coated for long-term preservation. The thorough inspections and surveys of the ship's structural condition were documented to provide a baseline for the balance of the protective storage period.

On May 8, 2008, the NSS was moved to Pier 13, Canton Marine Terminal at 4601Newgate Ave., Baltimore, MD. Maintenance activities continued once the ship was moved to its Baltimore layberth. From that point onward, the maintenance strategy focused on routine preventative maintenance, and restoration of ship systems and equipment necessary for husbanding the ship, and long-term retention. In addition, discrete activities were performed to provide for more secure access control, security surveillance, and protection of shipboard personnel. Infrastructure improvements required to employ shipboard habitability areas for routine administrative purposes such as offices and meeting rooms are ongoing.

Completed and Ongoing Maintenance Activities at Layberth:

- Modification of port-side Passenger Sideport for secure daytime access;
- Modification of Stateroom A-18 to Ship Security Office (adjacent to sideport);
- Installed a new security gate key fob reader pad system at the sideport entrance;
- Reactivated the General Alarm to be audible throughout the ship;
- Cleaned and painted numerous interior areas of the ship;
- Gutted three adjoining crew staterooms on B Deck and converted area to Radiological Control Station;
- Gutted six adjoining crew staterooms on C Deck and converted area to a Records Vault;
- HVAC installation on "B" Deck for offices / conference room; and "C" Deck Technical Library and Baggage Room (document storage);
- Electrical distribution system surveys and inspections; restoration of interior and exterior lighting; and,

- Repairs to aft mooring capstans and controllers.

1.3.3 Radiological and Environmental Characterization Scoping Survey

In September 2005, a radiological and environmental characterization scoping survey of the NSS was conducted. This characterization task was intended to provide a basis for estimating the cost of decommissioning. It is documented in NSS Radiological and Non-Radiological Spaces Characterization Survey Report and further described in Chapter 13.

The principle findings of the characterization scoping survey include the following:

- The CV entries were the first in over thirty years. The observed conditions generally supported the reported conditions of 1976. However, discrepancies were noted such as presence of hydraulic oils, migration of primary system water, significant quantities of trash/debris and superficial surface corrosion of components and lighting fixtures.
- Absence of fission products (other than trace quantities of cesium-137), uranium and its daughter isotopes, as well as transuranics (e.g., plutonium), indicates there were no significant fuel failures;
- Crud contribution to total curie content is minimal;
- No contamination was found in the non-radiological spaces;
- Minimal contamination was found in radiological spaces;
- Overall dose rates were much lower than expected;
- Sites previously identified as radiologically contaminated were found uncontaminated; and,
- Containment vessel systems, structures and components were exceptionally radiologically clean.

The scoping survey concluded that the NSS is in very good condition from a radiological perspective to support decommissioning. Note that during the assessment approximately 1500 gallons were found in the primary system. This volume is approximately 15% of the normal operating water volume of the system (approximately 10,000 gallons).

1.3.4 Current Status of N.S. *SAVANNAH* April 2009 to present

The ship is in a state of protective storage.

In November 2010, electrical system modifications were completed. These included deenergizing all originally installed 450 volt switchgear. All required 450/480 volt loads were moved to a new 800A Shore Power Switchboard.

1.4 Symbols for the Reactor Plant Auxiliary Systems

In the text, the Chapter 9 Reactor Plant Auxiliary Systems are referred to by the symbols listed below:

System	Symbol
Containment Cooling	CC
Control Rod Drive	CRD
Intermediate Cooling Water	CW
Data Acquisition	DA
Emergency Cooling	DX
Hydrogen Addition	HA
Nuclear Instrumentation	NI
Equipment Drain and Waste Collection	PD
Primary Pressurizing	PE
Primary Loop Purification	PP
Primary Relief	PR
Radiation Monitoring	RM
Reactor Space Ventilation	RSV
Sampling	SA
Shutdown Circulation	SC
Buffer Seal	SL
Soluble Poison	SP
Waste Dilution and Disposal	WD
Gaseous Waste Disposal and Collection	WL

2 SHIP DESCRIPTION

2.1 Features and Characteristics

Prior to permanent defueling in Fall 1971, the N.S. *SAVANNAH* (NSS) operated as a single-screw, all-steel, nine-compartment, cargo ship, with raked bow and modified cruiser stern. The ship has three complete decks and three upper decks in the superstructure. The ship's principal characteristics are shown in Table 2-1.

Table 2-1 Principal Characteristics of the N.S. *SAVANNAH*

Dimensions	Feet
Length overall	595.5
Length fore-post to rudder-post	545
Beam, molded	78
Height, baseline to weather deck (A-deck)	50
Height, baseline to top of house	85
Draft, design	29
Draft, light ship (approximate)	18.33
Displacement and Tonnage in Long Tons	
Net carrying capacity, total deadweight tons	9,656
Full load displacement, tons	21,990
Light ship, tons	12,334

2.2 Compartmentation, Decks and Space Arrangement

2.2.1 Compartmentation

Following reconstruction of bulkhead openings created when the ship was on public display at the Patriots Point Naval and Maritime Museum, the integrity of the ship's transverse watertight bulkheads was not confirmed (see Section 1.2.1). Therefore, the ship's original design capacity to resist damage and remain afloat with any two compartments flooded cannot be verified. The NSS meets all applicable USCG intact stability criteria, which is the minimum standard required for ship movements and layberthing.

The following text is retained for historical purposes.

The hull is subdivided by 10 watertight transverse bulkheads extending to the freeboard deck (B-deck). The ship is designed to a two-compartment standard of subdivision (i.e., the ship will remain afloat with any two compartments totally flooded at the vessel's full load draft of 29 feet 6 inches with the margin line 3 inches below B-deck), which meets the requirements of the USCG. Tonnage openings have been closed to convert the NSS from a sheltered deck to a full scantling vessel resulting in additional damaged stability.

Beginning at the bow, the compartments and spaces between transverse bulkheads are as shown in Table 2-2.

Table 2-2 Compartment Utilization

Space	Length (feet)	Assignment
Fore Peak	28	Tank and storerooms
Hold 1	50	General cargo and deep tank
Hold 2	55	General cargo
Hold 3	55	General cargo
Hold 4	55	General cargo
Reactor space	60	Containment vessel, reactor compartment, storerooms and stabilizers
Engine room	55	Engine room and control room
Hold 5	50	Storerooms
Hold 6	57.5	General cargo
Hold 7	47.5	General cargo
Aft peak	32	Tank, steering gear and storerooms

The hull is built on a transverse framing system except for the inner bottom, which is a combination of transverse and longitudinal framing specially stiffened below the reactor compartment. The inner bottom is also subdivided into tanks for carrying liquid ballast, diesel oil, steam generator (boiler) feedwater, fresh water and low-level radioactive liquid wastes.

2.2.2 Deck Arrangements

The ship has three complete decks (A, B and C) with platform decks at various levels. A promenade deck extends over the A-deck for about one-third of the ship's length.

The NSS's streamlined superstructure is set sufficiently aft to permit access to the reactor system containment vessel through the forward promenade deck for refueling. The forward weather deck accommodates the hatches for cargo holds 1, 2, 3 and 4. Each hold was served by two cargo booms. Holds 1 and 2 were served by 8-ton cargo booms and holds 3 and 4 by 10-ton cargo booms. The eight booms were operated in groups of four from two A-frame supporting structures with outriggers.

Aft of the superstructure a third cargo gear A-frame accommodates four 10-ton booms that served holds 6 and 7. Cargo hatch covers are set in coamings on A-deck and were hydraulically operated from local stations at each hatch.

All of the cargo handling equipment is deactivated, disabled and performs no active function.

The uppermost or navigation bridge deck served a dual purpose. The pilothouse is located on the forward end and the radio room is slightly aft to the starboard. The chart room is on the port side outboard of the gyrocompass room. The balance of the navigation bridge deck provided berthing space for the radio operator and is the location of two fan rooms, a battery room and the emergency generator room.

The NSS's pilothouse and navigation bridge were laid out to obtain the maximum visibility through the widest possible angle (almost 180 degrees). The pilothouse was equipped with the latest available navigation and communication equipment for a ship of its generation. The navigation control console housing all normal pilothouse instrumentation was situated near the forward end of the house and on the center-line. The magnetic compass was of the reflecting type and was the first of this type to be manufactured in the United States. The pilothouse also houses the control console for the anti-roll stabilizers which are installed on and above the inner bottom tank top level amidships. All of the navigation equipment is deactivated, disabled and performs no active function.

The boat deck, just below the bridge, is almost entirely occupied with officers' accommodations. An officers' lounge located on the after end of the deck afforded observation on either side of the ship.

Various public rooms and other spaces are located on the promenade deck. The forward portion is a weather deck containing the main hatch over the reactor compartment. Between the sloped front of the deckhouse and the main lounge, there is an enclosed passageway extending outboard athwartship from the centerline. This passageway also extends along both sides of the ship outboard of the inner house and is called the promenade.

2.2.3 Space Arrangement

As seen in Figure 2-1, the ship's power plant is located in the two amidships compartments (reactor space and engine room) which lie between frames 99 and 148.

Components of the reactor system are located in the reactor space. Most of the components are inside the containment vessel. The engine room contains all of the propulsion system equipment by which high pressure steam was converted to power. The engine room also contained the main and auxiliary electrical generating systems and most of the other plant auxiliary systems.

The main control room for the entire power plant is located on the 20-foot flat at the after end of the engine room. All operations for starting and controlling the power plant were executed from this room. Almost all measurements, conditions and events in the reactor and propulsion systems were monitored and logged in this room and all power plant maintenance operations were supervised from it.

2.3 Navigation and Steering Equipment

2.3.1 Navigation Equipment

All of the navigation equipment is deactivated, disabled and performs no active function.

2.3.2 Steering Gear

The steering gear is mechanically locked to keep the rudder centered during towing operations. It performs no active function.

2.4 Fire Detection and Control System

A limited number of portable fire extinguishers and fire axes are located on the ship. Fire detectors alarm at a continuously manned monitoring center as described in Section 2.11. The detectors also alarm visibly and audibly at the ship.

2.4.1 Fire Detecting System

The originally installed fire detecting system is deactivated, disabled and performs no active function.

2.4.2 Fire Detection and Alarm System (FA)

The installed FA system is multi-loop, Class A computerized and programmable. It is approved by the U.S. Coast Guard, NFPA, and UL for marine use. The FA System is powered by a 120VAC power source via a 120/120VAC isolation breaker. The isolation breaker will prevent power spikes from damaging the Alarm Panel internal components.

It consists of 130 smoke detectors and 50 pull boxes throughout the ship, which will activate strobe repeaters with alarm warnings and pre-recorded spoken directions. This alarm system notifies a remote monitoring station that will alert the local fire department.

In accordance with NFPA 72, Fire Safety Codes, a speaker microphone is located at the Alarm panel and speaker strobes are located throughout the normally occupied positions of the ship.

2.5 Lifesaving Equipment

All of the life-saving equipment is deactivated, disabled and performs no active function. A limited number of life rings are located on the ship.

2.6 Radio Equipment

All of the radio equipment is deactivated, disabled and performs no active function.

2.7 Deck Machinery

Most of the principal deck machinery including lifeboat davits and boat winches are deactivated, disabled and performs no active function. The hydraulic anchor windlasses are operable and can be used to lower and raise the anchors which are made up with the anchor chains. The forward mooring capstans are presently disabled, but can be reactivated with minimum effort, if required.

2.8 Flooding Alarms

The flooding alarm system is installed and maintained in accordance with standard marine practices for deactivated ships. The ship has flood alarm sensors that will detect flooding in any compartment adjacent to the sea. The ship's flood detectors alarm at a continuously manned monitoring center as described in Section2.11. The detectors also alarm visibly and audibly at the ship.

2.9 Dehumidification System

The dehumidification (DH) system is out of service and partially dismantled. It was installed in 1994 following the ship being placed in protective storage at the James River Reserve Fleet, Ft. Eustis, VA. The DH system is an interior preservation system commonly employed by MARAD on vessels in long-term (multi-year or indefinite) retention. A DH system mechanically lowers the moisture content of the atmosphere of an enclosed area of a ship to arrest deterioration. Per the MARAD Reserve Fleet Manual, the acceptable range for relative humidity is 35% to 45%. DH systems are typically temporary in nature, to permit rapid removal in the event of a vessel reactivation. Vent ducting and cabling associated with the DH system is normally routed through doorways, passageways and ladders throughout ship, leading to obstruction of the same.

The DH system was deenergized after the crew was established and the ship was routinely manned following the end of the Colonna's Shipyard period in 2007. The crew is expected to note and take action to correct degradation that the DH system would have minimized in an unmanned ship. The DH ductwork was removed and stored for potential future re-use. The DH machinery has been relocated and installed in locations that do not obstruct routine vessel operations, in anticipation of possible future

reactivation. Permanent cabling is provided to power the DH machinery. The DH system will be reactivated if the ship is moved to a periodically unattended state.

2.10 Hull Cathodic Protection System

The vessel is equipped with a conventional, marine impressed current cathodic protection system for hull preservation. The system is monitored and maintained as required. It is operated in accordance with standard maritime practices. At times, the system may be supplemented by external cathodic protection as described in the Reserve Fleet Manual.

2.11 Security Systems

The ship is served by two separate sensing and alarm systems. The first system includes numerous intrusion, flooding, and fire sensors. The second system includes an intrusion sensor per Technical Specifications as well as a smaller number of flooding and heat detectors. Alarms are transmitted to the off-site monitoring stations (a separate station for each system), which is then responsible for contacting designated NSS personnel. In addition, a fire alarm on the first system will activate internal strobes, an audible alarm, and a recorded warning; these annunciators are installed throughout the normally occupied areas of the ship.

2.11.1 Camera Surveillance System

A Camera Surveillance System is installed to allow video monitoring of the ship internal and external areas.

2.11.2 Security Entrance Door

The normal entrance to the ship is operated by a key fob by activating entry and exit panels. The fob operates to communicate with the door closure via a reader pad using passive radio identification frequency. After opening the door closure ensures the door returns to the closed position. In an emergency, the door can be opened from the inside by an emergency override switch panel. The system records the date and time that the individual holding the fob enters and exits the ship.

2.12 General Alarm

The General Alarm System was returned to service after repair and testing. The system is powered by a battery/trickle charger located in the C-Deck Battery Room. The General Alarm is activated by a Manual activation switch in Stateroom A-18.

Figure 2-1 Containment, Reactor Compartment and Engine Room (Frames 99-148)

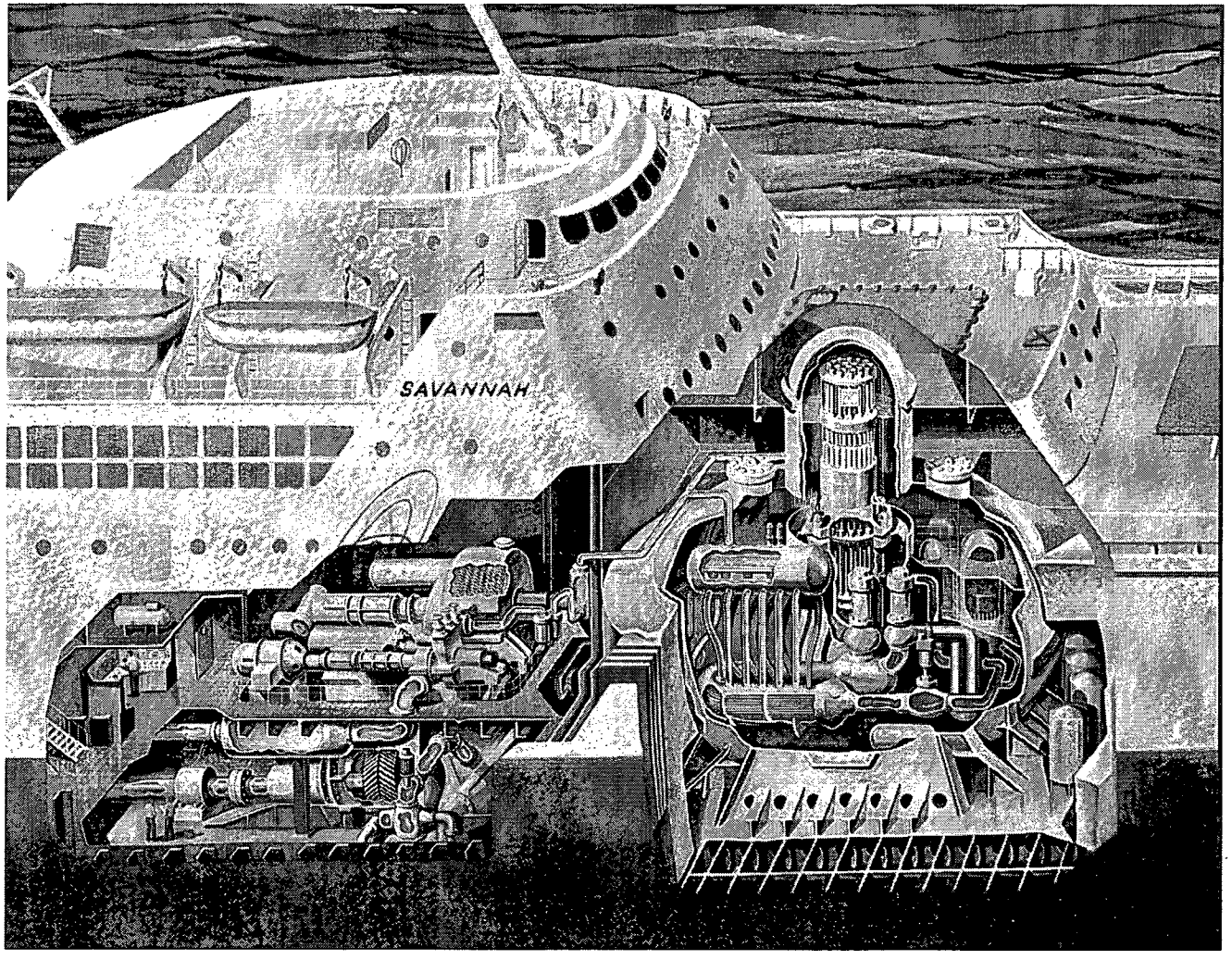

Figure 2-2 General Arrangement – Inboard Profile and Decks - Promenade, A and B

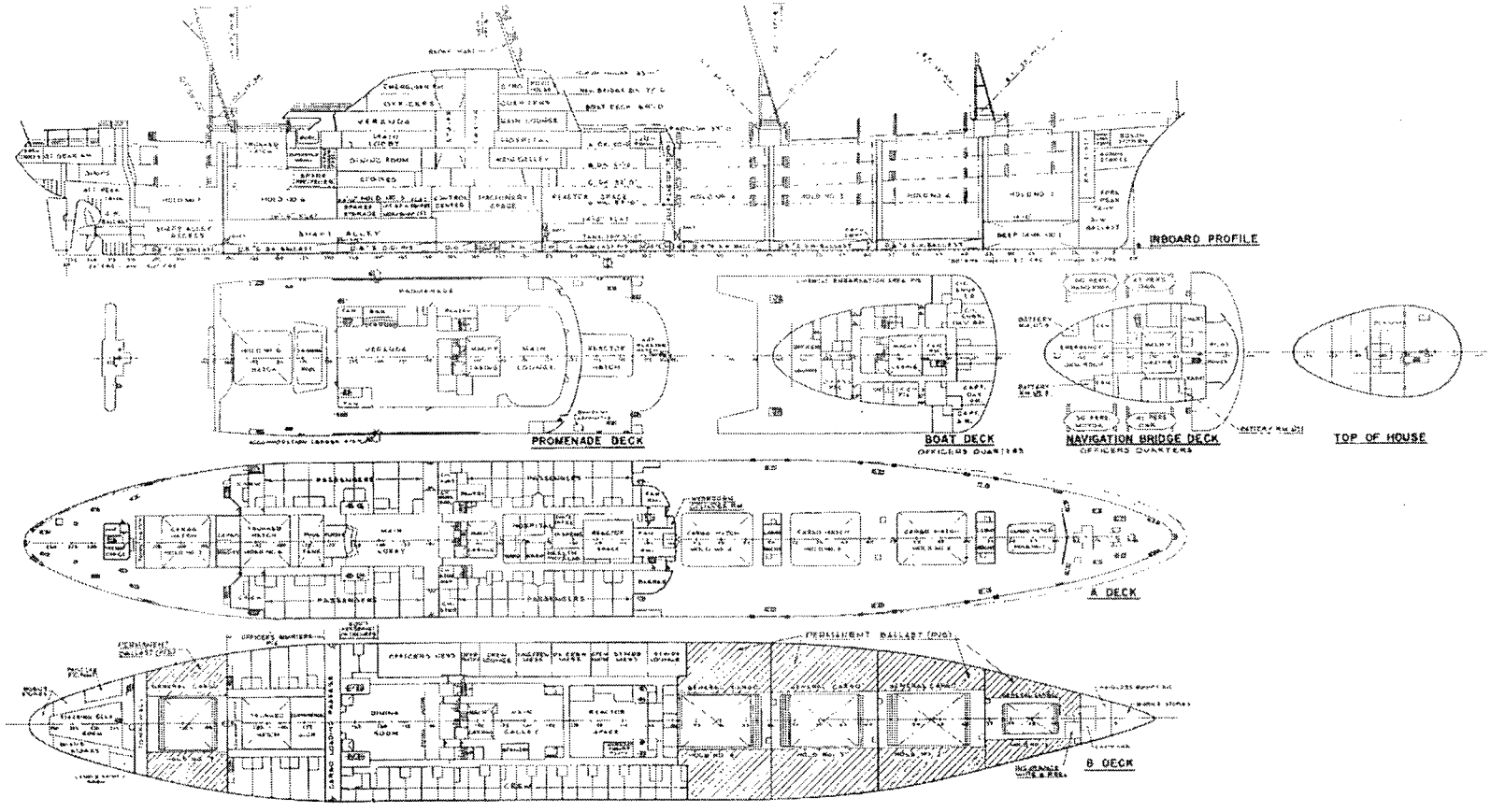

Figure 2-3 General Arrangement - Decks - C, D, Flats, Tank Tops and Containment Vessel

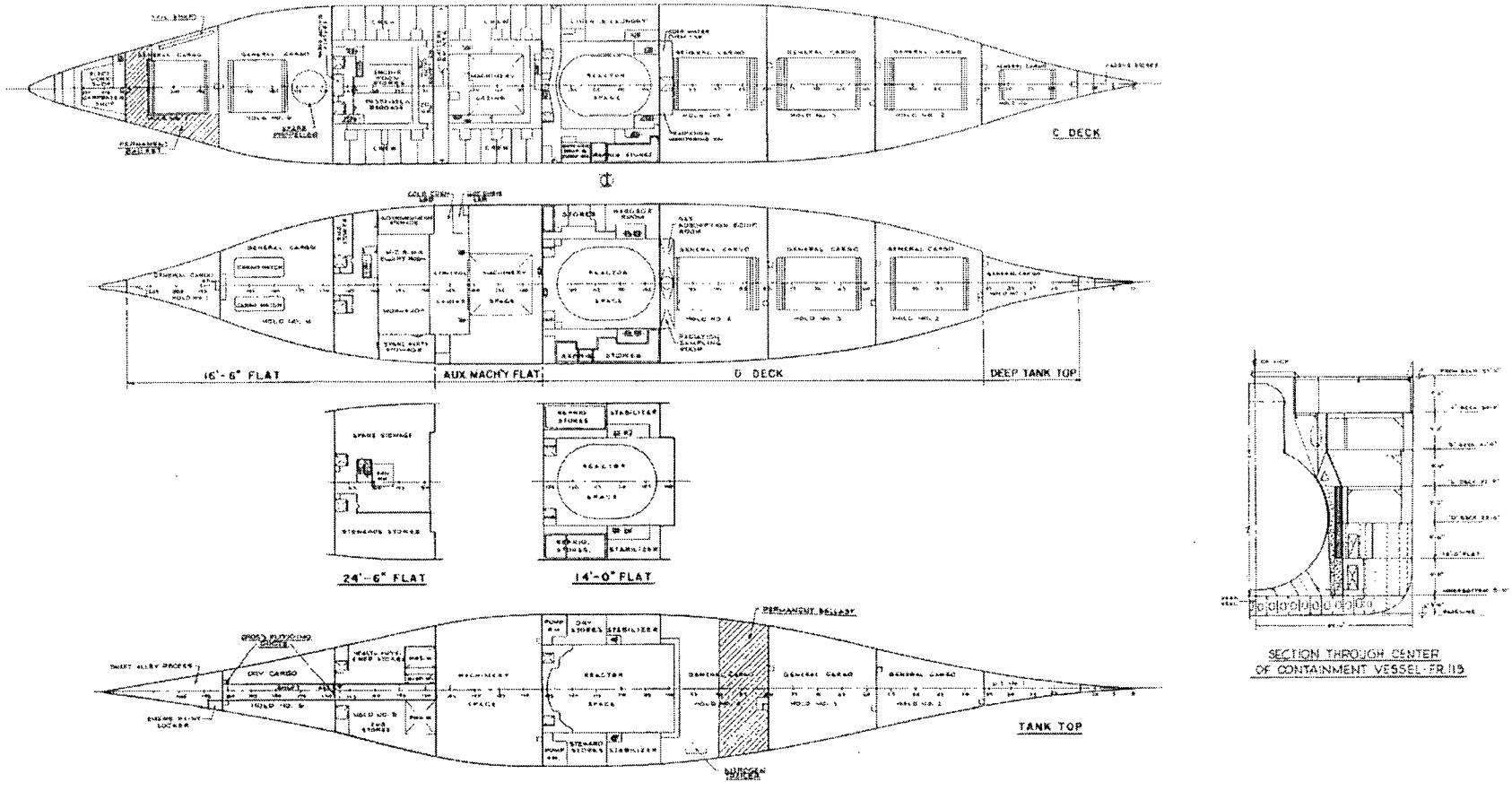

3 SITE AND SITE CRITERIA

3.1 Site Description

The licensed site of the NSS is the boundary defined by the ship's hull (see Figures 2-2 and 2-3). Because the NSS is mobile, the off-ship characteristics of the site vary with the location of the vessel.

During the NSS's operating period, the basic limitations on operations in all ports were described in the Port Operating Criteria which required the development of Port Operating Plans. The specific site characteristics of ports that the NSS entered were evaluated prior to the visit of the ship and documented in a Port Operating Plan. The limitations on operation were based on site analysis assuming the occurrence of the maximum credible accident (MCA) that is associated with reactor startup and operation. The MCA is a major loss-of-coolant accident (LOCA) from the primary system. The specific LOCA was assumed to be instantaneous, complete, transverse shear of a primary system pipe. The details of the original Port Operating Criteria are described in 3.2 Revision III of the FSAR. The details of the LOCA are described in 13.5 of Revision III of the FSAR.

Following defueling in Fall 1971 when the reactor was no longer operated, the MCA could have been revised to a worst case defueled accident as there was no longer any possibility of a reactor criticality accident. Regardless, the Port Operating Criteria remained in effect and unchanged as a conservative developmental tool for Port Operating Plans. Technical Specification Change Number 12, dated December 20, 1971, noted that "approval of the proposed changes would permit the ship to be towed, berthed, moored or drydocked in the defueled condition at any domestic location having an approved port entry and docking plan."

Prior to 1976 when the Possession-only License (Amendment 8) was issued, the Port Operating Criteria was an attachment to the Operating License NS-1. Port Operating Plans have been developed and approved by MARAD and forwarded to NRC for information to allow ship movement, berthing, public display and maintenance as needed.

During the ship's operating period, the acceptability of a location was dependent on establishing the low-population zone such that following the MCA, the dose to members of the public would not exceed established limits. Prior to permanent defueling in 1971, the Maximum Credible Accident was a loss of coolant accident assuming continuous operation at 100% for two years. Following defueling in 1971, there has been no possibility of any reactor/criticality accident. Following the 1976 decommission activities to remove the three primary purification system ion-exchangers, their resins and dewatering the primary, auxiliary and secondary systems, no decommissioning activities have been allowed.

Following the final shutdown on November 8, 1970 and the subsequent defueling, the remaining radioactive material is primarily the activated pressure vessel and other primary system components. The activation estimates have dropped dramatically in the subsequent years: 108,496 Ci (1976 calculated using power history and core physics), 13,000 Ci (1994, estimate based on decay of the principal isotopes from the 1976 data) and 452 Ci (2005). Note that the 2005 estimate is lower because it used the actual power history, the results of the intrusive sampling and was calculated using ORIGEN-II computer-based modeling code.

General area dose rates measured during the 2005 radiological and environmental characterization scoping survey are discussed in Chapter 13.

In January 2007, the Safety Evaluation Report for License Amendment 13 noted that:

> Given the reduced the inventory of radioactive material onboard, and the low activation estimates and general area dose rates, there is no Credible Accident that could cause the dose to the public to

approach the established dose limit. As a result, the acceptability of the ship's location should be dependent on MARAD safety analysis and prior notification to the NRC. Because MARAD has initiated and directed the towing of hundreds of vessels to layberths, repair yards and the reserve fleets, towing operations incident to relocating the NSS are straightforward and essentially routine.

In approving the Technical Specification change that allowed the NSS to be towed, berthed, moored or drydocked in any U.S. domestic location having a U.S. Maritime Administration approved Port Operating Plan, the NRC concluded:

> Given that there is little possibility that any event could lead to a dose approaching the established limit to the public, any difference between the ship being at JRRF or any domestic location with an approved Port Operating Plan is negligible.

Following implementation of License Amendment 13, Port Operating Plans are approved by MARAD and submitted to the NRC for information.

3.2 Ship Movement and Port Operating Criteria

3.2.1 Purpose

Notwithstanding the changes described in Section 3.1, the NSS remains a waterborne, mobile nuclear facility. The ability to move the ship and berth it in various locations, for various purposes, is an evolution that remains inherent to the facility. The following Ship Movement and Port Operating Criteria are consolidated from the several licensing precedents cited in Section 3.1, and provide a single source, contemporary guideline for these activities.

3.2.2 Ship Movement Criteria

The ship movement criteria define the basic parameters under which routine movement of the NSS may be conducted. Emergency ship movements may be made for a variety of reasons, such as shipboard or shoreside fire, allisions and collisions, security threats, and heavy weather. In such cases the emergency movement of the vessel will be coordinated with, or directed by the United States Coast Guard (USCG), and will, to the extent practicable, comply with routine ship movement criteria.

1. MARAD will notify NRC in writing in advance of planned movements of the ship. MARAD will promptly notify NRC in the event of an emergency movement of the ship.
2. For any ship movement that involves a change of port, MARAD will review the affected Port Operating Plan(s) in accordance with these criteria, and certify the results to NRC.
3. Ship movements will be governed by applicable USCG regulations and notices. Coordination with local USCG in departure and arrival ports is required for all NSS movements. Similar coordination with and notification to state and local governments and port authorities will be undertaken as required.
4. In general, NSS movements will conform to USCG dead ship tow criteria and conventional marine towing practices and standards. Unless otherwise directed by the USCG, the NSS will transit on normal shipping routes and channels without limitation.
5. The NSS is a Public Vessel of the United States, and as such may be exempt from certain USCG regulations and requirements. Where such exemptions exist, they will be evaluated jointly by MARAD and the USCG to determine specific applicability to the NSS.

3.2.3 Port Operating Criteria

These port operating criteria, based on the criteria contained in Revision IV and other licensing precedents, provide basic guidelines for in-port operations and berthing of the NSS in the defueled, non-operating condition. Port Operating Plans, derived from these criteria, shall be prepared and maintained for ports in which the NSS is likely to berthed and/or taken for repairs, maintenance and drydocking.

1. A detailed Port Operating Plan of the port to be visited must be prepared and must be approved by MARAD prior to the ship's visit. The content of Port Operating Plans shall include at least the following:
   - A description of the local geography and meteorological / hydrological information;
   - A description of port administrative services and local contact information for applicable service organizations (e.g., United States Coast Guard, Pilots, Tugs, Police and Fire); and,
   - A description of mooring locations (if known) and transit routes to be used by the ship.
2. Port-specific security and emergency (including radiological) plans must be prepared in advance of the ship's movement. Such plans may be incorporated into the Port Operating Plan, and should demonstrate how licensee personnel and local authorities will be organized and employed to conduct operations that would be necessary after the occurrence of an emergency.
3. Within 30 days of arrival in the port, briefings and walk-throughs of the emergency plans should be conducted with first-responders. When the port visit involves repairs, maintenance or drydocking at a ship repair facility / shipyard; facility-specific plans shall be prepared and implemented upon arrival.
4. Port Operating Plans shall be reviewed at least annually, and updated as required.
5. The criteria for adequate tugs and limitation on visitors are deleted.

3.3 Control Zones

Population control zones were no longer required after the Possession-only License was issued.

3.4 Comparison with Central Station Site criteria in the USA

[Deleted]

4 CONTAINMENT

4.1 Introduction

The containment comprises a combination of compartments and equipment having the purpose of minimizing release of radioactivity outside the ship following an accident. Prior to and following defueling in 1971, this system has been the NSS's principal engineered safeguard. During the NSS's operating period, its performance and reliability were vital to safety of the ship and the surrounding environment. The containment is divided into two parts: the primary containment (containment vessel) and the reactor compartment (secondary containment).

4.2 Primary Containment (Containment Vessel)

4.2.1 Function and General Design Criteria

The function of the primary containment was to minimize the release of fission products after a serious accident. During the operating phase, the Maximum Credible Accident (MCA) was the accident that would have resulted in the greatest potential hazard to the general public. The entire primary system and all primary components are located inside the pressure containment (Figure 4-1).

A major failure of the primary system (*i.e.,* instantaneous, complete, transverse shear of primary system pipe) in the MCA would have been followed by rapid flashing of the primary coolant water as it was released to the containment. A major portion of the coolant would have escaped and caused the containment pressure to rise. As decay heat was added to the core, lack of adequate cooling would have resulted in an increased core temperature. Ultimately, failure of the cladding would have released fission product to the primary system and containment.

Although the containment must necessarily have access openings and service penetrations where some finite amount of leakage is possible, the pressure containment was designed to hold the largest possible quantity of these fission products. The following criteria were established for the pressure containment:

1. The containment was sealed at all times during plant operation and no entrance was permitted until the plant had been shut down and the radiation had been reduced to a safe level.
2. Design pressure of the containment vessel was determined by expansion of the primary fluid from the entire primary system and of the secondary fluid from one steam generator. The blow-down occurs through a postulated pipe rupture.
3. No high-temperature piping containing primary water was permitted to penetrate the containment vessel.
4. Electrical containment penetrations were designed to withstand the containment design pressure and temperature.
5. Fluid penetrations and piping outside the containment up to and including the first shutoff valve were designed to withstand the containment design pressure and temperature.
6. Any equipment inside the containment vessel that might fail or give trouble during plant operation was installed either in duplicate or in such a manner that the faulty equipment may be isolated from the rest of the plant without hindering the plant operation.
7. The shell and all its penetrations were designed in accordance with American Bureau of Shipping (ABS) Rules, United States Coast Guard (USCG) regulations and American Society of Mechanical Engineers (ASME) requirements.

Figure 4-1 Arrangement of Principal Components in Containment

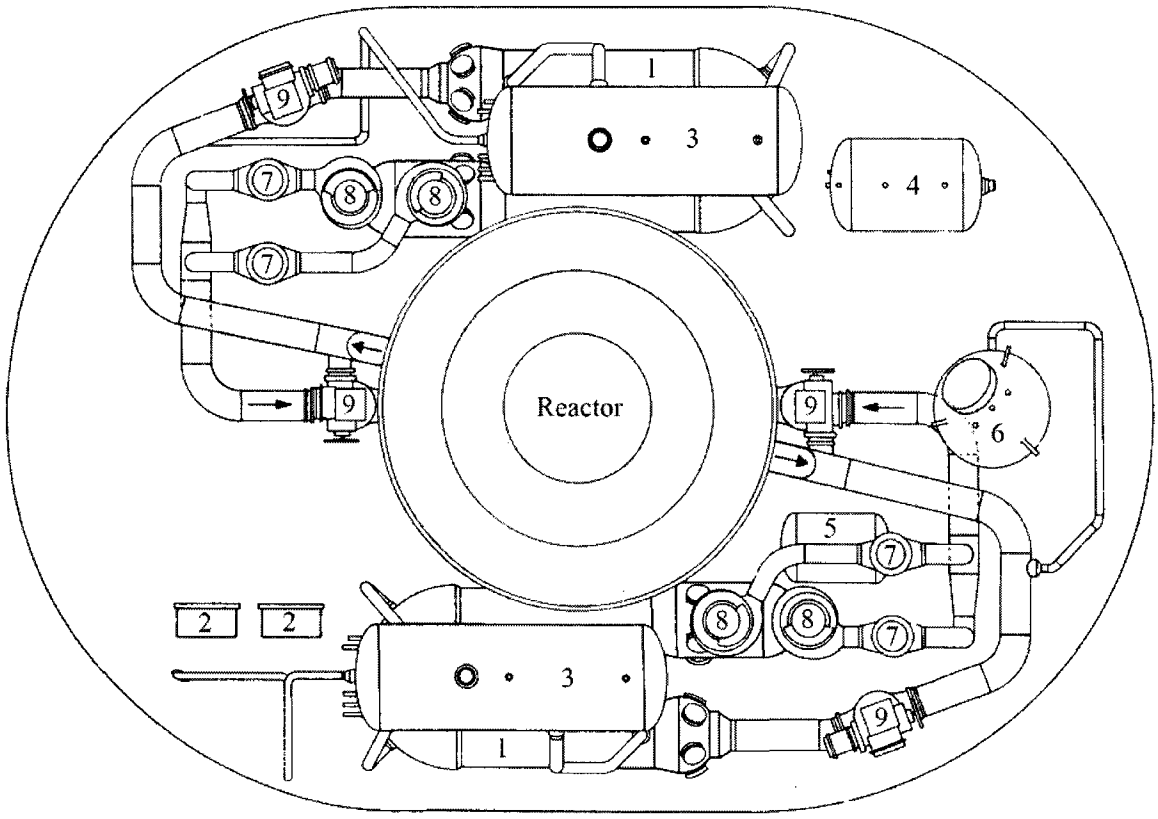

1	Heat Exchanger (Steam Generator U-tube bundle)	2	Let Down Cooler	3	Steam Drum (Steam Generator)
4	Effluent Condensing Tank	5	Containment Drain Tank	6	Pressurizer
7	Check Valve	8	Primary Pump	9	Gate Valve

4.2.2 Containment Vessel

4.2.2.1 Description

The containment vessel (See Figure 4-2) is a horizontal cylinder with hemispherical ends having an outside diameter of 35 feet 4¾ inches and a length of 50 feet 8½ inches. It has a centrally mounted vertical cylinder 13 feet 6 inches in diameter extending 16 feet 6 inches above the horizontal cylinder. The gross volume of the containment is approximately 40,000 cubic feet and the net free volume is approximately 31,200 cubic feet. The containment vessel bulkhead thicknesses vary from a minimum of 1¼ inches at the hemispherical ends to 3¾ inches in the cylindrical portion of the vessel.

The vessel lies fore and aft on the ship's center line, 18 inches above the inner bottom. It rests in a saddle-shaped support, which is integral with the ship's structure and is secured only at the bottom at the after end of the cylindrical section. This connection provides resistance to

rotational forces and fore-and-aft motion. The support can thus accommodate thermal expansion. Lateral support is provided at mid length by the collision mat, thereby preventing movement due to the roll of the ship. The collision mat itself is composed of alternate layers of one inch steel plates and three inch slabs of redwood. Structural chocks at C-deck level provide lateral support and ensure that the containment remains in place at critical angles, including those in the capsized condition.

The containment has 99 major penetrations and openings through the shell (See Table 4-1, List of Containment Penetrations). Some of these are subdivided into several minor penetrations for electrical or pneumatic service. All of the normal access and maintenance openings are located on the upper half of the vessel. Nearly all of the electrical and fluid penetrations pass through the lower half of the vessel.

4.2.2.2 Structural Design

Design of the pressure containment was based on the MCA conditions. Very early in the design phase of the project, the MCA was defined as the instantaneous release of the fluid energy in the primary system while the reactor was at full power. The preliminary calculation for this condition resulted in a peak pressure of 186 psig. The containment shell and all penetrations were designed for this pressure. Later, the accident was specifically defined as a primary system rupture having a flow area equal to the cross-sectional area of the largest primary pipe. Also included in the energy release was the fluid energy of one main steam generator. Since the rupture area had been defined, the post-accident analysis was made time-dependent and the resultant peak pressure was determined to be 173 psig. The containment vessel hydrostatic test was conducted at this pressure. Later analysis included the effects of a subsequently authorized higher maximum reactor power. It also included the effects of experimental data for post-accident condensing film heat transfer coefficients. The net effect of these two factors on the peak pressure was a reduction to 160 psig. Hence, the shell thickness is approximately 15% greater than that which is required by Section VIII of the ASME Boiler and Pressure Vessel Code. The design stress of the code is one-fourth of the ultimate tensile stress. The pressure containment detailed design calculations were reviewed and approved by the USCG and ABS.

Maximum stresses in the containment vessel under full shielding and dynamic stress of a 30-degree roll are experienced in the main cylinder rings located 7 feet 6 inches forward and aft of the containment vessel center line and in the inner cylinder rings located 2 feet 6 inches forward and aft of the center line. These stresses were determined by loading each element of the ring sections with vertical and horizontal loads at a 30-degree roll combined with the dynamic effect of this roll. Each ring was analyzed by use of strain-energy equations. The rings were considered stable and statically determinate structures with unit loads applied to each redundant reaction and moment. Unit deflection equations were then obtained, which when equated to zero, resulted in simultaneous equations, whose solutions yielded the reactions and moments. The final moments in each element of the rings were found and since the section properties of the elements were known, the resulting bending stresses were obtained.

Maximum stresses in the main cylinder ring are 16,000 psi in the inner flange and 8400 psi in the outer shell of the ring section. These stresses occur when support is horizontal (90 degrees to the vertical). Maximum stresses in the cylinder partial ring sections are 20,500 psi in the inner flange of the ring and 6200 psi in the outer shell of the ring section. These stresses also occur when support is horizontal (90 degrees to the vertical).

The torque developed by a dynamic 30-degree roll, is considered to be carried in the shell of the containment vessel as a shear in the shell. The shearing force resulting from this condition is resisted by the bolts located at the aft external support.

Maximum stresses in the hemisphere rings are not appreciably affected by a 4-degree pitch condition since the longitudinal center of pitch is located near the center line of the containment vessel. The stress in these rings is 20,000 psi for a static condition at a point 90 degrees from the vertical.

The external structural supports at 90 degrees to the vertical port and starboard are stressed to 6000 psi by the reactions from the cylinder rings. These stresses occur in the D-deck transverse members during a 30-degree roll condition.

The external foundations of the containment vessel were designed to resist the reactions from the hydrostatic test. These reactions exceeded those experienced during a 30-degree roll. Thus, the containment vessel foundations are suitable for all loading conditions, since maximum reactions due to the hydrostatic test are the most critical reactions experienced by the external foundations.

All internal equipment foundations are designed to stresses less than 12,500 psi for the combined roll-and-pitch condition.

4.2.2.3 Fabrication and Strength Testing

The cylindrical section, the two hemispherical heads and the cupola were fabricated as four separate units. All welds in each section were preheated and the roots and fillets were inspected by Magnaflux methods. After completion of welding, all welds were radiographed and the four sections were stress-relieved. The sections were then lowered into the reactor compartment and welded together manually by the same procedures used for the individual pieces. Since the final assembly welding of the sections was on sections of plate whose thickness was less than 1½ inches, no final stress relieving was required. Before installation of components in the containment, the completed vessel was hydrostatically tested at 173 psig with the penetrations capped or plugged closed.

The fabrication and welding procedures were reviewed by the USCG and the ABS. Site inspectors were present during fabrication and testing of the vessel to ensure compliance with the approved procedures.

4.2.3 Containment Vessel Penetrations

The containment penetrations, the containment isolation valves and their location and method of operation are listed in Table 4-1. No penetration has been tested since final shutdown November 8, 1970.

There are six openings which can be used for access or equipment removal. All but one (the double-door air lock) of these openings are bolted closures. The 42 inch double-door air lock permitted entering the containment without breaking containment integrity. In addition to the air lock, a 42 inch diameter bolted hatch is located forward of the cupola. This hatch can also be used for access and servicing of small equipment when the plant is shutdown. A CV entry shield plug can be placed on top of the upper airlock door and on top of the bolted hatch.

A 13 ½ feet, full-diameter hatch at the top of the cupola is provided for major maintenance and refueling operations. A 5½ feet diameter hatch is located in the top of the cupola for control rod

drive removal. Two combination, 18" x 24" manways and flooding hatches are located on the starboard side in the lower quarter of each hemispherical head.

There are 99 service penetrations that carried air, water, steam, hydraulic fluid and electrical power through the containment vessel shell. The inerting piping in the CV cupola head was disconnected outside and valves closed so that the "integrity" of the vessel was maintained until the characterization activities in 2005 required the CV be opened and ventilated using the nitrogen purge piping for supply and exhaust. Supply air was provided from the ship's interior dehumidified air distribution ducting when . The discharge of the ventilation cycle is through a HEPA filter located in the upper level reactor compartment. The modified system was left in place after the characterization activities were complete.

Piping penetrations less than 2 inches in diameter utilize a simple nozzle, while larger pipes use a nozzle with a reinforcing doubler. The penetrations for the 8 inch diameter main steam line from the top drum of each main steam generator are sealed off with a special 14 inch diameter expansion joint, which is welded to the pipe at the top and to the containment at the bottom.

There are only two other service penetrations which are larger than the main steam lines: the 10 inch air-purging penetrations. However no special provision for attachment is made except for the reinforcing doubler, since these pipes are essentially always at the same temperature as the containment.

Electrical penetrations are grouped together in boxes at the point where the cables penetrate the containment. The number of subpenetrations in each major penetration varies from 8 to 25 depending on service, conductor size and location of equipment being served. Leakage occurred through the original penetrations. The original electrical penetrations were replaced with fused glass-to-steel fittings. The electrical penetrations were individually tested at 286 psig with helium.

4.2.4 Containment Auxiliary Features

In addition to the pressure vessel itself, many auxiliary features were required to fulfill both normal and emergency functions. During normal operation the atmospheric conditions both inside and outside the pressure containment was maintained in a suitable range for the installed equipment. This was accomplished inside by the Containment Cooling (CC) system, which is an arrangement of air distribution ducts, duplicate two-speed circulating fans and cooling coils. The circulating fans were operated and supplied with power from either the main control room or the emergency cooling panel on the navigation bridge deck. Associated with the CC system was the necessary instrumentation to measure pressure, temperature and humidity. By maintaining a slight positive pressure in the containment, any large change in containment integrity was brought quickly to the operator's attention. This system maintained an average internal containment air temperature of about 130°F. As a backup to this system, when the normal cooling water supply was unavailable, a third cooling coil was available as a part of the Emergency Cooling (DK) system. This coil was supplied directly with sea water.

The atmospheric conditions in the reactor compartment were maintained by the Reactor Space Ventilation (RSV) system. Air that had leaked into the reactor compartment was discharged through filters and up the 90 foot mast forward of hold 4.

All of the CC, DK and RSV equipment is deactivated, disabled and performs no function. Any ductwork or other components removed, as part of removing the RCP motors in 1971 or removing the primary purification ion exchangers (demineralizers) in 1976, was not replaced.

Following a major pipe rupture inside the containment, it was desirable to reduce the post-accident pressure. The following design features permitted this pressure reduction:

- Either the normal or emergency cooling coils in the CC system were used. Heat was removed by forced air circulation if the fans were operable or by natural air circulation if they were not. The possibility of forced circulation was enhanced because the fans at half speed were capable of operating in a steam air atmosphere below 100 psi. Either forced or natural circulation could have been increased after the accident by the automatic opening of two large side plates in the cooling ductwork located just below the fans.
- Pressure reduction was accomplished by spraying water from the fire main into the containment through the CO_2 injection system.
- Heat removal and pressure reduction was accomplished by partially flooding the lower reactor compartment so that heat flows through the containment shell into the flooding water.

Following the MCA, the possibility existed that radioactivity could escape through some of the fluid penetrations. In the case of most penetrations, this escape would have occurred only if the MCA broke a pneumatic, hydraulic, or water pipe inside the containment to permit radioactive fluid to leave the containment through the pipe. However, this escape was prevented because each fluid line that is in service during normal operation contained either a check valve or a quick closing shutoff valve. With only two exceptions, these quick closing valves are tripped closed if containment pressure reaches 5 psig. The two exceptions were the two heavy-walled, 8-inch main steam lines, which were secured from the main control room because of the possible desire to continue operating the ship's service turbine generators for a brief period after the accident.

Because the containment was inaccessible during operation, hydrogen content of the containment atmosphere, neutron level outside the primary (neutron) shield tank and the gamma level near the containment air lock plus temperature, pressure and humidity parameters could be monitored.

The use of hydraulic oil in the containment meant that there was a possibility of fire if a combustion-supporting atmosphere is present. When the NSS began operations some leaking of hydraulic fluid from the control rod drive system into the containment was experienced. Since the fluid was flammable and under some conditions was subject to flashing when spilled on the hot vessel surfaces, the containment atmosphere was inerted with a nitrogen (N_2) blanket to eliminate the possibility of combustion (less than 10% oxygen). There were other occasions of leaking hydraulic fluid after the containment was inerted, but no combustion problems resulted. A complete spare charge of nitrogen was kept aboard the ship to recharge the containment if an outside supply was unavailable. The containment inerting arrangement is shown in Figure 4-2.

Another feature of the containment design provides assurance that the containment would not collapse should the ship be involved in an accident which results in sinking. On the lower half of the vessel are two spring-return, bolted, flooding hatches which open and permit sea water to enter the containment if the ship sinks to a depth of 100 feet or more. When the containment is flooded and the pressures are equalized, the hatches re-close, thereby preventing escape of water from the containment through the flooding hatches. These hatches remain installed but have not been verified functional since final shutdown in November 1970.

For a sinking accident in shallow water, the containment has four 2" salvage connections on the cupola head. Shutoff valves are located immediately adjacent to the vessel on each of these connections and blank flanges are installed on the open end of each valve.

Figure 4-2 Containment Inerting Schematic

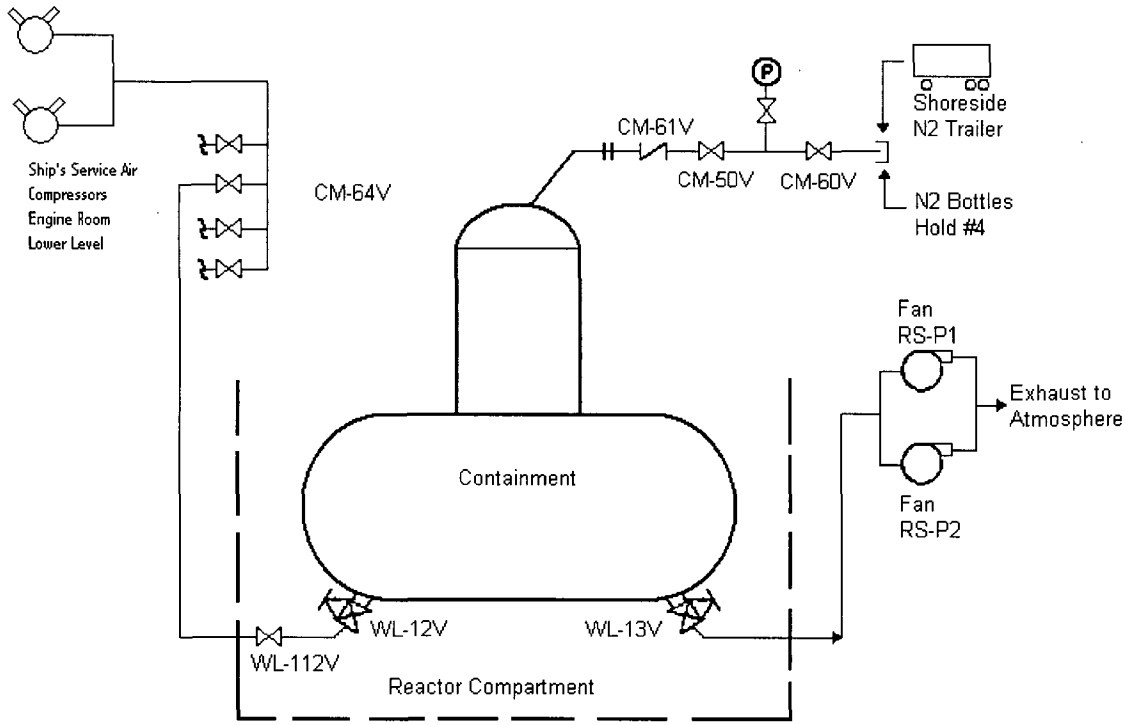

4.2.5 Containment Performance Requirements

No leak rate tests on the pressure containment have been performed since final shutdown November 8, 1970.

4.3 Reactor Compartment (Secondary Containment)

4.3.1 General Description

As shown in Figures 4-3 and 4-4, the reactor compartment surrounds the containment vessel and forms a secondary containment around the pressure containment. The concrete, lead and polyethylene form the secondary shield. The volume enclosed by the concrete is the lower reactor compartment or secondary shield area. This shield is described in 5.3.2.

The principal auxiliary system associated with this compartment is the reactor space ventilation (RSV) system. It was installed during the spring 1963 outage. The system consists of two physically independent sections. One section was for heat removal from the upper part of the reactor compartment; the other section was for exhausting air from the reactor compartment.

Figure 4-3 Reactor Compartment

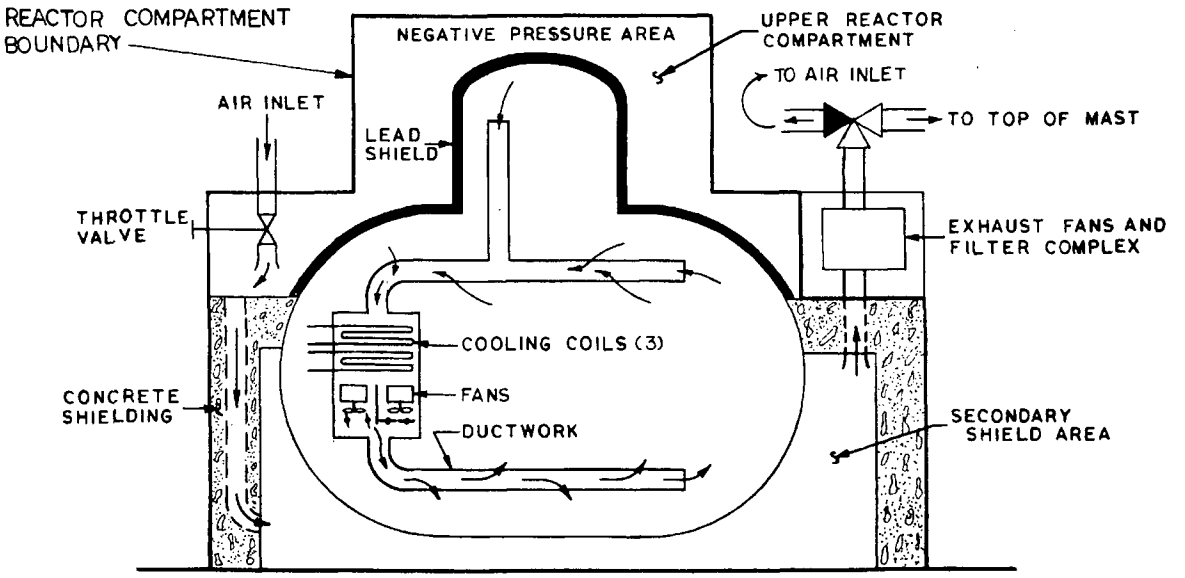

4.3.2 Cooling Section

The cooling (or upper reactor compartment recirculation) part of the RSV system is deactivated, disabled and performs no active function. It is located entirely in the reactor compartment. Two air intakes were provided. The recirculating air intake is on the port side at the A-deck level. The fresh air intake was supplied by fan 1-105-1 via regulating valve RS-40V. The recirculation fans (one is a spare) took suction on the intake manifold and discharge past the salt-water-cooled air cooling coils into a common header. This header distributed the air throughout the upper part of the reactor compartment.

Any ductwork or other components removed, as part of removing the RCP motors in 1971 or removing the primary purification ion exchangers (demineralizers) in 1976, was not replaced.

The water supply for the cooling coils (RS-C1 and RS-C2) was from the sea water pumps of the intermediate cooling water (CW) system. A booster pump RS-P5 provided additional head for the cooling water when required.

4.3.3 Exhaust Section

4.3.3.1 Function

The exhaust system of the RSV system is deactivated, disabled and performs no active function. It was part of the engineered safeguards for the ship. Its primary purpose was to retain any particulate and halogen fission products which may leak from the containment vessel. The effectiveness of its filter system was tested periodically to demonstrate desired efficiency for iodine and particulate removal.

The exhaust section of the RSV system maintained the reactor compartment at a pressure of approximately 1 inch wg below the B-deck corridor pressure. The reactor compartment pressure was below that of the surrounding shipboard areas and the containment vessel. This arrangement ensured that any containment vessel leakage was exhausted via the filter-adsorber banks in the RSV system and not to the surrounding shipboard areas. The reactor compartment

would have also acted as a surge tank in providing additional holdup (decay) time for fission products escaping from the containment vessel.

4.3.3.2 Containment Vessel Purging

The containment vessel was purged via the exhaust section of the RSV system. Purging was done by opening the containment vessel purge valves (WL-12V and WL-13V) and closing a damper in the suction of the exhaust section of the RSV system. Air was thus drawn from the reactor compartment into the containment vessel and then to the exhaust section of the RSV system.

4.3.3.3 Suction Ductwork and Lower Plenum

The exhaust section of the RSV system took suction in the lower part of the reactor compartment via a single duct to the lower plenum. Separate connections on the lower plenum lead to the two filter-adsorber banks. Motor-operated valves (RS-3V and RS-4V) adjacent to the lower plenum provided flow control. Controls for these valves are located nearby. Normal operation was with one of the filter-adsorber banks in service and the other on standby.

4.3.3.4 Filter Units

The filter units consist of demisters, roughing filters, absolute filters and iodine adsorber assemblies. The filters and adsorbers were each designed for a specific purpose. Each filter and adsorber is described below.

The demister was the first process unit downstream of the inlet valves and is provided for the removal of any entrained water in the exhaust gases. The demister consists of a mat of Teflon yarn on a stainless steel core. This type of construction had been extensively tested at the Savannah River Laboratories (SRL).

The roughing filter follows the demister. Its purpose was to remove particulate matter from the exhaust stream. The filtering medium consists of a glass wool mat arranged in a pleated pattern for greater surface area.

The absolute filter is located downstream of the roughing filter. Its purpose was to remove very fine particulate matter which passes through the demister and roughing filter. The filtering medium is a glass sheath that is arranged in the form of deep pleats for additional surface area.

The absolute filters were tested quarterly and prior to each port entry for particulate matter removal efficiency. This test was performed using an aerosol produced by bubbling air through the liquid dioctyl phthalate (DOP). The aerosol was carried along in the RSV system by the exhaust air stream and the DOP concentration was determined on both sides of the filter-adsorber bank. Each absolute filter was tested many times and the efficiency was consistently indicated to be more than 100 times higher than the required 99.9%.

The iodine adsorber assembly follows the absolute filter. This unit consists of three parts mounted in a common housing. The first and last parts of the assembly are identical and consist of mats of silver-plated copper ribbon. This material, made of 4% silver and 96% copper, is compressed to a density of 27 lb/ft3 and is 4 inches thick. The function of this adsorber is to remove halogens from the exhaust stream by chemical combination with the silver.

The middle part is a charcoal adsorber. Granular activated charcoal is contained in 10 horizontal beds, each of which is 2 feet wide, 4 feet long and 1 inch thick. The charcoal is held in place by perforated plates. Baffles at the ends of the trays ensure parallel flow through all 10 beds.

The ventilation stream from both filter-adsorber banks flowed to the upper plenum. Air from the upper plenum goes to the fans. The exhaust fans took suction from the upper plenum and discharge into a single duct leading to the foremast (90-foot elevation). Drains are provided to handle any condensate formed in the fan or the discharge line. These drains terminate in the forward sump in the reactor compartment.

Figure 4-4 Containment Vessel (showing the secondary shield)

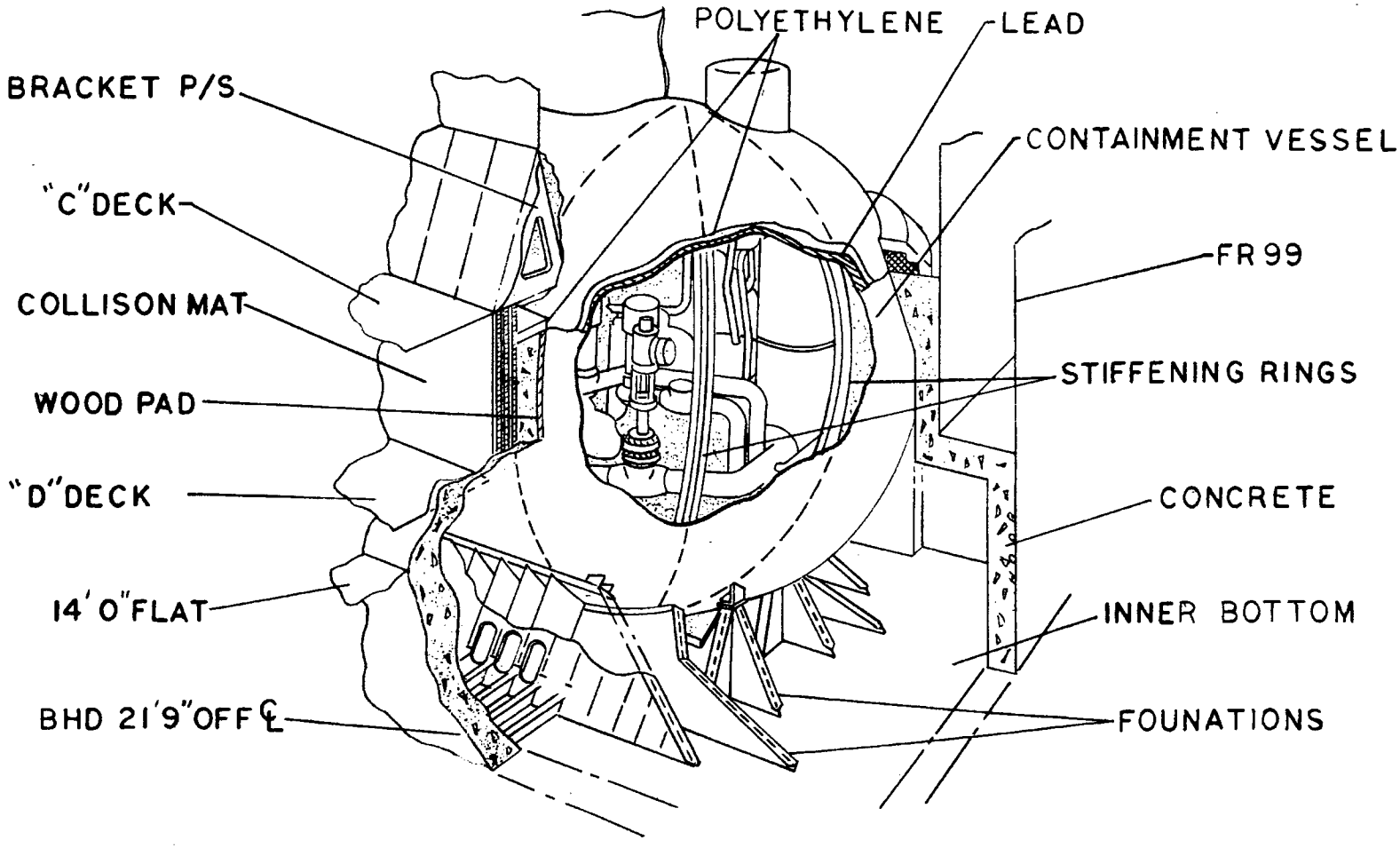

Table 4-1 List of Containment Penetrations

Pen. No.[3]	Pipe No.	Description	Valve	Operation	Location
1	PD-25	1" sch 80, makeup to stbd generator	Check, PD-78V		Lower reactor compartment, stbd fwd
2	PD-3	1" sch 80, makeup to port generator	Check		Lower reactor compartment, port aft
3	PD-27	1-1/2" containment drain	Diaphragm-operated stop, PD-21V	Normally closed; air to open, close on high containment pressure	Lower reactor compartment, aft
4	PD-22	1-1/2" sch 40, drain from containment drain tank	Diaphragm-operated stop, PD-20V	Normally closed; air to open, close on high containment pressure	Lower reactor compartment, fwd
5	SL-9	2-1/2" sch 160, SL system outlet	Diaphragm-operated stop with hand wheel, SL-8V	Air to open, close on high containment pressure	Lower reactor compartment, port fwd
6	SL-7	2-1/2" sch 160, SL system inlet	Check, SL-87V		Lower reactor compartment, port fwd
7	SS-2	8" sch 80, steam from port generator	Air-operated stop, SS-4V	Air to open, close by push-button from the main control room	Upper reactor compartment, port
8	SS-1	8" sch 80, steam from stbd generator	Air -operated stop, SS- 1V	Air to open, close by push-button from the main control room	Upper reactor compartment, port

[3] Pen. No. is the Penetration Number (i.e., the NYS item number, Drawing 529-200-6).

Table 4-1 List of Containment Penetrations

Pen. No.[3]	Pipe No.	Description	Valve	Operation	Location
9	SS-4	4" sch 80, feed to port generator	Gate SS-16V and check SS-26V	Electric motor	Lower reactor compartment, port aft
10	SS-3	4" sch 80, feed to stbd generator	Gate SS-13V and check SS-25V	Electric motor	Lower reactor compartment, stbd aft
11	PP-6	2" sch 40, PP system outlet	Diaphragm-operated stop, PP-57V	Air to open, close on high containment pressure	Lower reactor compartment, stbd aft
12		2" sch 40, compressor inlet for leak testing	Solenoid, CM-13V		Lower reactor compartment, stbd aft
13	CW-28	1-1/2" sch 40, CW system water from primary shield water tank	Diaphragm-operated stop CW-203V, & check CW-150V	Manual, air to open, close on high containment pressure	Lower reactor compartment, stbd
14	CW-30	1-1/2" sch 40, CW system water from primary shield water tank	Check CW-151V, diaphragm-operated stop CW-203V, in combined line CW-28	Manual, air to open, close on high containment pressure	Lower reactor compartment, stbd
15	CW-26	1-1/2" sch 40, CW system water to primary shield water tank	Check, CW-185V		Lower reactor compartment, stbd
16	CW-27	1-1/2" sch 40, CW system water to primary shield water tank	Check, CW-187V		Lower reactor compartment, stbd
17	CW-43	1-1/2" sch 40, CW system water to primary pump PS-P3	Check, CW-197V		Lower reactor compartment, stbd
18	CW-46	1-1/2" sch 40, CW system water from primary pump PS-P3	Diaphragm-operated stop, CW-209V	Air to open, close on high containment pressure	Lower reactor compartment, stbd
19	CW-47	1-1/2" sch 40, CW system water	Check, CW-199V		Lower reactor compartment,

Table 4-1 List of Containment Penetrations

Pen. No.[3]	Pipe No.	Description	Valve	Operation	Location
		to primary pump PS-P4			stbd
20	CW-50	1-1/2" sch 40, CW system water from primary pump PS-P4	Diaphragm-operated stop, CW-210V	Air to open, close on high containment pressure	Lower reactor compartment, stbd
21	CW-42	1-1/2" sch 40, CW system water from primary pump PS-P2	Diaphragm-operated stop, CW-208V	Air to open, close on high containment pressure	Lower reactor compartment, port
22	CW-39	1-1/2" sch 40, CW system water to primary pump PS-P2	Check, CW-195V		Lower reactor compartment, port
23	CW-38	1-1/2" sch 40, CW system water from primary pump PS-P1	Diaphragm-operated stop, CW-207V	Air to open, close on high containment pressure	Lower reactor compartment, port
24	CW-35	1-1/2" sch 40, CW system water to primary pump PS-P1	Check, CW-193V		Lower reactor compartment, port
25	CW-32	2" sch 40, CW system water to air conditioner CC-C1	Check, CW-189V		Lower reactor compartment, port aft
26	CW-80	2" sch 40, CW system water from air conditioner CC-C1	Diaphragm-operated stop, CW-205V	Air to open, close on high containment pressure	Lower reactor compartment, port aft
27	CW-33	2" sch 40, CW system water to air conditioner CC-C2	Check, CW-191V		Lower reactor compartment, port aft
28	CW-81	2" sch 40, CW system water from air conditioner CC-C2	Diaphragm-operated stop, CW-206V	Air to open, close on high containment pressure	Lower reactor compartment, port aft
29	CW-23	4" sch 40, CW system water to letdown coolers PP-C3 & PP-C4	Check, CW-179V		Lower reactor compartment, stbd aft

Table 4-1 List of Containment Penetrations

Pen. No.[3]	Pipe No.	Description	Valve	Operation	Location
30	CW-24	4" sch 40, CW system water from letdown coolers PP-C3 & PP-C4	Diaphragm-operated stop, CW-202V	Air to open, close on high containment pressure	Lower reactor compartment, stbd aft
31	CW-25	1-1/2" sch 40, CW system water to shield tank makeup	Check, CW-183V		Lower reactor compartment, port
32	BF-22	3/4" sch 80, chemical feed to stbd generator	Check, BF-27V		Lower reactor compartment, stbd aft
33	BF-23	3/4" sch 80, chemical feed to port generator	Check, BF-26V		Lower reactor compartment, port aft
34	SS-8	1" sch 80, surface blowdown from port steam drum	Diaphragm-operated stop, SS-22V	Air to open, close on high containment pressure	Lower reactor compartment, port aft
35	SS-7	1" sch 80, surface blowdown from stbd steam drum	Diaphragm-operated stop, SS-21V	Air to open, close on high containment pressure	Lower reactor compartment, stbd aft
36	SA-1	1" sch 80, sampling system outlet	Diaphragm-operated stop, SA-45V	Air to open, close on high containment pressure	Lower reactor compartment, stbd aft
37	PD-14	1" sch 80, drain from effluent condensing tank	Diaphragm-operated stop, PD-39V, normally closed	Air to open, close on high containment pressure	Lower reactor compartment
38		1" sch 80, hydraulic oil inlet line	Diaphragm-operated stop, CC-405V	Air to open, close on high containment pressure	Upper reactor compartment
39		42" ID manhole fwd			Upper reactor compartment
40		42" ID manhole aft			Upper reactor compartment

Table 4-1 List of Containment Penetrations

Pen. No.[3]	Pipe No.	Description	Valve	Operation	Location
41		13.5 feet ID cupola			Upper reactor compartment
42		1" sch 80, hydraulic oil line	Check, CC-402V		Upper reactor compartment
43		1/2" sch 80, hydraulic oil line to pressure gage	Diaphragm-operated stop, CC-406V	Electric solenoid, close on high containment pressure	Upper reactor compartment
44		1" sch 80, hydraulic oil line drain header	Stop, CC-404V	Electric solenoid, close on high containment pressure	Upper reactor compartment
45		1" sch 80, hydraulic oil line tank header	Diaphragm-operated stop, CC-401V	Air to open, close on high containment pressure	Upper reactor compartment
46	CW-68	1" sch 80, CW system water to effluent tank makeup	Check, CW-181V		Lower reactor compartment, port fwd
47	CW-31	4" sch 40, CW system water from letdown coolers PP-C1 & PP-C2	Diaphragm-operated stop, CC-201V	Air to open, close on high containment pressure	Lower reactor compartment, stbd aft
48		Power wiring			Lower reactor compartment, port aft
49		Non-nuclear wiring			Lower reactor compartment, stbd aft
50		Power wiring			Lower reactor compartment, port aft
51		Nuclear wiring			Lower reactor compartment, stbd aft
52		Power wiring			Lower reactor compartment,

Table 4-1 List of Containment Penetrations

Pen. No.[3]	Pipe No.	Description	Valve	Operation	Location
					stbd aft
53		Non-nuclear wiring			Lower reactor compartment, port aft
54		Lighting			Lower reactor compartment, stbd aft
55		Nuclear wiring			Lower reactor compartment, stbd aft
56		Emergency cooling power wiring			Lower reactor compartment, port fwd
57		Power wiring			Lower reactor compartment, stbd fwd
58		Non-nuclear wiring			Lower reactor compartment, port fwd
59		Non-nuclear wiring			Lower reactor compartment, stbd fwd
60		Television reactor monitoring wiring			Lower reactor compartment, port aft
61		Electrical test fittings, non-nuclear wiring			Lower reactor compartment, port aft
62		Control rod wiring			Lower reactor compartment, stbd aft
63		Control rod wiring			Lower reactor compartment, port aft
64		Control rod wiring			Lower reactor compartment, stbd aft

Table 4-1 List of Containment Penetrations

Pen. No.[3]	Pipe No.	Description	Valve	Operation	Location
65		Control rod wiring			Lower reactor compartment, port aft
66		Instrument air lines, 12" nozzle			Lower reactor compartment, port fwd
	PE-T1	1/4" pneumatic tubing, air to pressurizer spray control valve PE-1V	Solenoid, CC-7V	Close on high containment pressure	
	PE-T21	1/4" pneumatic tubing, air to bypass valve PE-3V for pressurizer spray control	Solenoid (auto shut), CC-27V	Close on high containment pressure	
	PE-T2	1/4" pneumatic tubing, air to pressurizer spray stop valve PE-2V	Solenoid, CC-8V	Close on high containment pressure	
		1" air breathing system	2 check, CM-54V & CM-55V		
	WL-T1	1/4" pneumatic tubing, supply air to pressurizer vent valve WL-1V	Solenoid, CC-16V	Close on high containment pressure	
	PR-T4	1/4" pneumatic tubing, supply air to effluent condensing tank vent valve PR-9V	Solenoid, CV-11V	Close on high containment pressure	
	PR-T2	1/4" pneumatic tubing, signal air for pressurizer relief control valve PR-3V	Solenoid, CC-10V	Close on high containment pressure	
	PR-TI	1/4" pneumatic tubing, signal air from pressurizer relief stop valve PR-2V	Solenoid, CC-9V	Close on high containment pressure	

Table 4-1 List of Containment Penetrations

Pen. No.[3]	Pipe No.	Description	Valve	Operation	Location
67		Instrument air lines 12" nozzle			Lower reactor compartment, stbd aft
	SA-T1	1/4" pneumatic tubing, supply air to sample flow control valve SA-1V	Solenoid, CC-12V	Close on high containment pressure	
	SA-T2	1/4" pneumatic tubing, supply air to sample flow control valve SA-4V	Solenoid, CC-13V	Close on high containment pressure	
	PP-T1	1/4" pneumatic tubing, supply air to letdown cooler control valves PP-1V & PP-3V	Solenoid, CC-2V	Close on high containment pressure	
	PP-T2	1/4" pneumatic tubing, supply air to letdown cooler control valves PP-2V & PP-4V	Solenoid, CC-3V	Close on high containment pressure	
	PP-T3	1/4" pneumatic tubing, signal air for purification flow control valve PP-7V positioner	Solenoid, CC-5V	Close on high containment pressure	
	PP-T4	1/4" pneumatic tubing, supply air for purification flow control valve PP-7V positioner	Solenoid, CC-18V	Close on high containment pressure	
	PP-T6	1/4" pneumatic tubing, signal air for purification flow control valve PP-6V	Solenoid, CC-4V	Close on high containment pressure	
	PP-T7	1/4" pneumatic tubing, signal air for purification flow control valve PP-8V	Solenoid, CC-6V	Close on high containment pressure	

Table 4-1 List of Containment Penetrations

Pen. No.[3]	Pipe No.	Description	Valve	Operation	Location
	PP-T8	1/4" pneumatic tubing, supply air to purification flow control valve PP-8V positioner	Solenoid, CC-17V	Close on high containment pressure	
	PP-T35	1/4" pneumatic tubing, air vent from valve PP-7V positioner	Solenoid, CC-24V	Close on high containment pressure	
	PP-T36	1/4" pneumatic tubing, air vent from valve PP-8V positioner	Solenoid, C-25V	Close on high containment pressure	
		1" air manifold to atmosphere, vent for diaphragm valves inside containment	2 solenoid, CC-19V & CC-26V	Close on high containment pressure	
	SL-124	3/4"flush flow to primary pumps PS-P1 & PS-P2	Check, SL-109V		
	SL-126	3/4" flush flow to primary pump PS-P4	Check, SL-111V		
	SL-127	3/4" flush flow to primary pump PS-P3	Check, SL-112V		
68		18" x 24"manhole (flooding hatch)			Lower reactor compartment, lower stbd fwd
69		18" x 24" manhole (flooding hatch)			Lower reactor compartment, lower stbd aft
70	CW-71	4" sch 40, CW system water to letdown coolers PP-C1 & PP-C2	Check, CW-177V		Lower reactor compartment, stbd aft
71		10" ventilation purge air	Gate WL-13V; normally closed except when purging containment with reactor shutdown	Manual reach-rod operated	Lower reactor compartment, stbd fwd

Table 4-1 List of Containment Penetrations

Pen. No.[3]	Pipe No.	Description	Valve	Operation	Location
72	SL-8	1-1/2" sch 160, buffer seal inlet primary makeup	Check, SL-88V		Lower reactor compartment, port fwd
73		Unassigned			Lower reactor compartment, port fwd
74		Unassigned			Lower reactor compartment, port fwd
75		1/2" sch 40, containment pressure transmitter connection	High pressure transmitter will withstand maximum containment pressure		Lower reactor compartment, aft
		Low pressure transmitter	Gate, normally open	Electric solenoid, close on high containment pressure	Lower reactor compartment
76-A	DK-1	3" DK system saltwater inlet	Gate, DK-4V, normally closed	Electric motor	Lower reactor compartment, fwd
76-B	DK-19	3" DK system overboard discharge	Gate, DK-32V, normally closed	Electric motor	Lower reactor compartment, fwd
76-D	DK-12	1" DE system makeup from deaerating feed tank	Check, DK-33V		Lower reactor compartment, fwd
77		10" nozzle, emergency natural ventilation supply vent	Gate WL-12V, normally closed	Manual reach rod operated	Lower reactor compartment
78	WL-1	2" capped spare			Lower reactor compartment, port fwd
79	WL-3	1-1/2" sch 40 reactor equipment vents inside containment vessel outlet	Diaphragm-operated stop, WL-20V	Air to open, close on high containment pressure	Lower reactor compartment, port fwd

Table 4-1 List of Containment Penetrations

Pen. No.[3]	Pipe No.	Description	Valve	Operation	Location
80	RM-19	1" hydrogen & radiation monitoring sample return line	Solenoid, CC-30V	Close on high containment pressure	Lower reactor compartment stbd aft
81	RM-1	1" hydrogen & radiation monitoring sample supply line	Solenoid, CC-29V	Close on high containment pressure	Lower reactor compartment, stbd aft
82		1-1/2" sch 40 leak test reference system outlet	Solenoid, CM-20V	Close on high containment pressure	Lower reactor compartment, port aft
83		1-1/2" sch 40, unassigned			Lower reactor compartment, port aft
84		1-1/2" sch 40 leak test reference system inlet		Close on high containment pressure	Lower reactor compartment, port aft
85		1-1/2" sch 40, pneumatic equipment system			Lower reactor compartment, port aft
86		2-1/2" unassigned			Lower reactor compartment, port fwd
87		2-1/2" unassigned			Lower reactor compartment, stbd aft
88		1-1/2" unassigned		Space penetration	Cupola head, port fwd
89		1-1/2" unassigned		Space penetration	Cupola head, port aft
90		2" salvage line	Gate, normally closed, blind flanged		Cupola head, stbd fwd
91		2" salvage line	Gate, normally closed, blind flanged		Cupola head, stbd aft
92		2" salvage line	Gate, normally closed, blind flanged		Cupola head, port aft

Table 4-1 List of Containment Penetrations

Pen. No.[3]	Pipe No.	Description	Valve	Operation	Location
93		2" salvage line	Gate, normally closed, blind flanged		Cupola head, port aft
94		CO_2 inlet	Swing check, CM-58V		Reactor compartment, port aft
95		Air & N_2 inlet	Check CM-61V, & double gate valve CM-59V & CM-60V		Reactor compartment, stbd aft
96		5.5 feet ID control rod drive access			Cupola head
97		1/4" hydraulic lines for airlock operator			Cupola head, stbd aft
98		1/4" hydraulic lines for airlock operator			Cupola head, stbd aft
99		1/4" hydraulic lines for airlock operator			Cupola head, stbd aft

5 RADIATION SHIELDING

5.1 Design Basis

The NSS shielding is designed in accordance with criteria based on the April 1958 recommendations of the National Committee on Radiation Protection and Measurement and complied with the requirements of "Standards for Protection Against Radiation" (10 CFR Part 20) in effect during the ship's operating period.

5.2 Radiation Sources

See Chapter 13.1 Radiological Characterization

5.3 Radiation Shields

5.3.1 Primary Shield

The primary shield is the primary (neutron) shield tank, (Figure 5-1) approximately 185 inches in outside diameter and 17 feet, 8 inches high, that surrounds the reactor vessel. When filled, the shield tank formed a 33-inch-thick water annulus that provided the required neutron shielding to prevent excessive neutron activation of material inside the containment vessel and to reduce the neutron doses outside the secondary shield. Peripheral lead shielding, varying in thickness from 1 to 4 inches of lead, is placed on the outside of the primary shield tank. This peripheral shield reduced the gamma dose rate outside the secondary shield during reactor operations. It reduced the dose rate inside the containment vessel enough to permit personnel entry shortly after shutdown.

The water in the primary shield tank was cooled by intermediate cooling water through a coil within the shield tank. The water level in the primary shield tank was maintained by addition of water from the intermediate cooling system as necessary. The shield tank water level was indicated and annunciated in the main control room.

The tank was drained to the double bottom tank below the reactor compartment in March 1976. In 2005, a hole was drilled in to the primary shield tank as part of a project to determine the Curie content and radio isotopic composition of the reactor pressure vessel and internals.

5.3.2 Secondary Shield

The secondary shield is the concrete or lead and polyethylene surrounding the containment vessel as shown in Figures 4-3 and 4-4. The figures show the relationship between the containment vessel and the upper and lower reactor compartment. Below the containment vessel equator, the shield is a vertical bulkhead of reinforced concrete with a maximum thickness of 4 feet and is extended at the forward end to form a the lower reactor compartment (secondary shield area) for the low pressure primary auxiliary systems located outside of the containment vessel. Above the equator, the shielding consists of about 6 inches each of lead and about 8 inches of polyethylene in that order placed on the containment vessel shell. Tanks within the inner bottom below the reactor compartment can be filled with water to provide additional lower shielding when the ship is in drydock. See Table 9-1, Double Bottom Tanks below RC and Figure 9-1, Double Bottom Tanks below RC.

The weight of the concrete shield is approximately 1187 tons and that of the lead and polyethylene is 616 tons. The containment vessel alone weighs 250 tons.

Figure 5-1 Primary Shield Tank

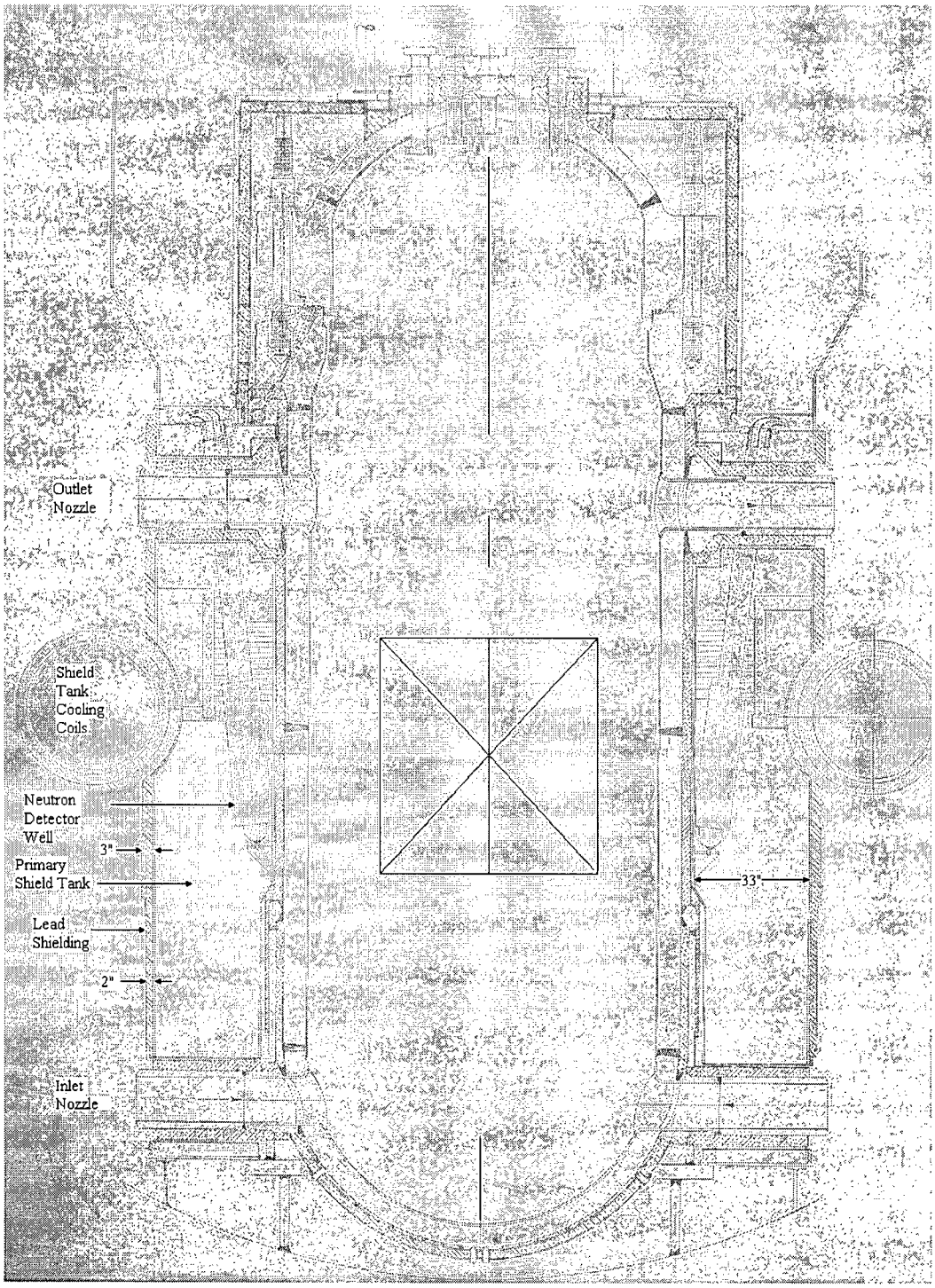

5.3.3 Local Shielding

Local shielding was provided on the demineralizers and filters of the primary loop purification system. The design of these shields was based on an assumed fuel pin failure which exposes 5% (363 kg) of the fuel inventory to the primary coolant.

The demineralizers were shielded with 4½ inches of lead. They were removed in March 1976. The filters are shielded with 2 inches of lead. They remain in place.

5.4 Radiation Sources

[Deleted]

5.5 Shield Surveys

[Deleted]

5.6 Calculated Doses from Failed Fuel Rods

As of Revision III to the FSAR, past radiochemical data indicated that there had been no *significant* failed fuel in the reactor for approximately 15,000 effective full power hours (EFPH) of operation. From early power operation at Yorktown until August 1968, a period of approximately 6 years, the samples taken during medium-and high-power operation had yielded essentially constant results. Representative values were 5.0E-2 μCi/ml and 3.0E-4 μCi/ml for the gross 15-minute degassed sample and the gross 1-hour iodine activity, respectively, from samples taken upstream of the purification ion exchangers and filters. Approximately 90% of the measured primary water activity at medium- and high-power had been due to activation of corrosion products and other impurities in the primary water.

During the last voyage before the Shuffle Outage, evidence of a *minor* fuel failure was detected. It appeared that small amounts of fission products were released to the primary coolant whenever there was a significant change in reactor power level. Post shuffle operation indicated that the situation still existed; however, it did not limit operation or access anywhere on the ship.

The primary and secondary shielding was designed to allow operation with failed fuel elements and fission products in the primary system. Continuous purification of the primary coolant restricted the fission product radioactivity levels in the primary coolant during operation and after shutdown. The primary loop purification system (PP) system is described in 9.2.1. During operation with Core Ia, the fission product activity was not significant compared to primary and secondary gamma radiation from the core.

During the entire lifetime of Core I, there was no other evidence of fuel failure based on the analysis of primary water samples.

6 REACTOR CORE

6.1 Reactor Core General Description

The reactor core included the fuel elements, the control rods, and the reactor vessel internals. Each of these is described in detail below. Table 6-1 and Figure 6-1 describe the reactor vessel fuel elements and control rods as originally designed. During operation, the core was cooled by the primary coolant, which flowed through the three thermal shields, through the second-pass fuel elements, and finally through the third-pass fuel elements.

6.1.1 Fuel Elements

The active region of the N.S. *SAVANNAH* core contained 32 fuel elements. There were 16 fuel elements in the down flow or second pass and 16 in the up flow or third pass. The reactor was permanently defueled in Fall 1971. The defueling started on August 23, 1971. The last fuel elements were removed September 29, 1971.

6.1.2 Control Rods

The control rod and follower assembly consisted of three sections: a stainless steel extension, a neutron-absorbing portion, and a Zircaloy-2 follower rod. All three sections were rigidly fastened together in a continuous assembly. There were 21 cruciform control rods arranged on a square pitch.

Following permanent defueling in Fall 1971, all twenty-one control rods are disconnected from their respective CRD extension shafts and remain in their fully inserted position between the empty fuel location channels. The CRD extension shafts are disconnected from the lead screw and are in a fully inserted position from the reactor head nozzles to the top of the control rods. The CRD lead screws are withdrawn and pinned in place. One additional control rod (cut into two pieces 6 feet long and one twelve inch piece) was placed in core. This is the control rod removed during the 1968 fuel shuffle.

Steel caps are placed onto the twenty-one reactor head nozzles to completely seal the nozzle from the containment vessel atmosphere and mechanically separate the CRD mechanism from the control rod.

6.1.3 Internals

The entire core is mounted in the core support shield, which is supported by a conical support ring welded to the reactor vessel wall 23.8 inches below the center of the upper flow nozzles. The internals could be removed either as individual components or as integral assemblies.

The fuel container assembly is confined between lower and upper grid plates approximately 90 inches apart. The fuel elements (removed in 1971) and structural internals were held down against the net upward thrust of the primary coolant flow by the main holddown spring.

The main holddown spring transmitted a downward force from the vessel head to the internals to counteract the upward hydraulic forces during operation. If the ship should capsize, this spring would retain the internals. The load is transferred through the upper flow baffle assembly to the core support ring in the vessel.

The orifice seal plate is bolted directly to the upper flow baffle assembly and provides a sealing surface for the 21 control rod nozzle seals. These seals are maintained by springs in the 21 control rod nozzles.

The upper flow baffle assembly, located between the orifice seal plate and the upper grid plate, consists of a series of 16 flow tubes surrounded by a vertical cylindrical chamber contained between upper and lower cover plates. There are 18 vertical gusset plates, which support the bearing ring around the periphery.

Control rod guide blocks, which run from the upper cover plate to the bottom cover plate, help position the control rods under adverse pitch-and-roll conditions.

The flow tubes direct the primary system coolant into the upper plenum of the reactor vessel and prevent cross-flow. The flow tubes also prevent lateral forces against the control rod extensions when the rods are withdrawn. Following defueling in 1971, the fuel element flow nozzles were removed from the fuel and reloaded into fuel channels in the reactor vessel.

The upper grid plate is a welded assembly consisting of flow tubes, various vertical baffles, and upper and lower cover plates. The outer region of the grid plate assembly acts as a turnaround manifold for coolant entering the sixteen second-pass fuel elements from the thermal shield area. The flow tubes directed the third-pass coolant from the fuel elements to the corresponding flow tubes of the upper flow baffle assembly.

The first and second coolant passes are separated by the main core seal formed at the perimeter of the lower plate of the grid plate assembly and the top of the inner thermal shield.

The fuel container assembly consists of 32 fuel element containers, transition pieces, a base plate, and a cylindrical thermal shield. Normally, the fuel container assembly is not removed when the reactor is refueled.

The lower flow baffle is a welded assembly consisting of flow tubes, mounted between upper and lower cover plates and surrounded by a vertical cylindrical shield. Twenty one emergency control rod snubbers are mounted on the bottom of the lower plate.

The peripheral flow tubes direct the flow from the second-pass fuel elements into the lower plenum chamber. The center flow tubes conduct the flow from the lower plenum chamber to the third-pass fuel elements.

The emergency snubber, a combination of a spring and a hydraulic damper, absorbed the kinetic energy of a control rod if one was dropped during loading of the rods into the reactor.

The core support shield, the center one of three thermal shields, had the dual function of protecting the vessel wall from radiation damage and supporting the entire lower flow baffle, the lower plenum chamber, and the fuel container assembly. It is suspended from and bolted to the conical support ring. A flange at the bottom supports the fuel container assembly and the lower flow baffle assembly. The lower plenum chamber is bolted to this flange.

The lower plenum chamber consists of a circular cylinder closed on the bottom by an elliptical head. It encloses the region around the lower flow baffle assembly and the emergency control rod snubbers. The chamber turns the flow from the second pass into the third pass, and it separates the inlet coolant flow from the flow that has just left the second pass fuel elements.

There are three thermal shields: the inner thermal shield in the fuel element container assembly, the core support shield, and the fixed or outer thermal shield permanently attached to the vessel wall. All are concentric, stainless steel cylinders.

Following permanent defueling in Fall 1971, all reactor internal components are in place, i.e., core basket, upper grid plate, upper flow baffle. Thirty-six upper flow transition pieces and one irradiated control rod (cut in three pieces) have been loaded into six fuel element channels in the core basket. Thirty-two upper flow transition pieces were from Core I and 4 were from Core Ia.

In 2005, a project was performed to determine the Curie content and radionuclide composition of the reactor pressure vessel, internals and primary (neutron) shield tank by extraction of metal samples at selected locations. Using a precision gun-drilling or boring operation, an access hole was extended

through the external lead shield, the inner and outer annuli of the primary (neutron) shield tank, the insulation layer, reactor pressure vessel wall and inner weld deposit cladding, and finally through the outer and middle thermal shields surrounding the core volume. Material extraction was achieved by sleeving the drill bits and progressively decreasing the access hole diameter at each component interface.

6.2 Thermal and Hydraulic Characteristics

[Deleted]

6.3 Nuclear Characteristics

[Deleted]

6.4 Shipboard Physics Test Program

[Deleted]

Table 6-1 Reactor Internals

Item number in Figure 6-1	Description
1, 2, 3	Control rod inner sleeve
4	Belleville spring (reactor head closure)
5	Belleville spring (upper flow baffle
6	Upper flow baffle
7	Connections to core baffle for support shield
8	Upper grid plate
9	Core support shield
10	Inner thermal shield
11	Spring coupling (hold down) for upper fuel element
12	Fuel pins in fuel element
13	Control rod
14	Lower flow baffle assembly
15	First pass flow
16	Second pass flow
17	Third pass flow

Figure 6-1 Reactor Internals

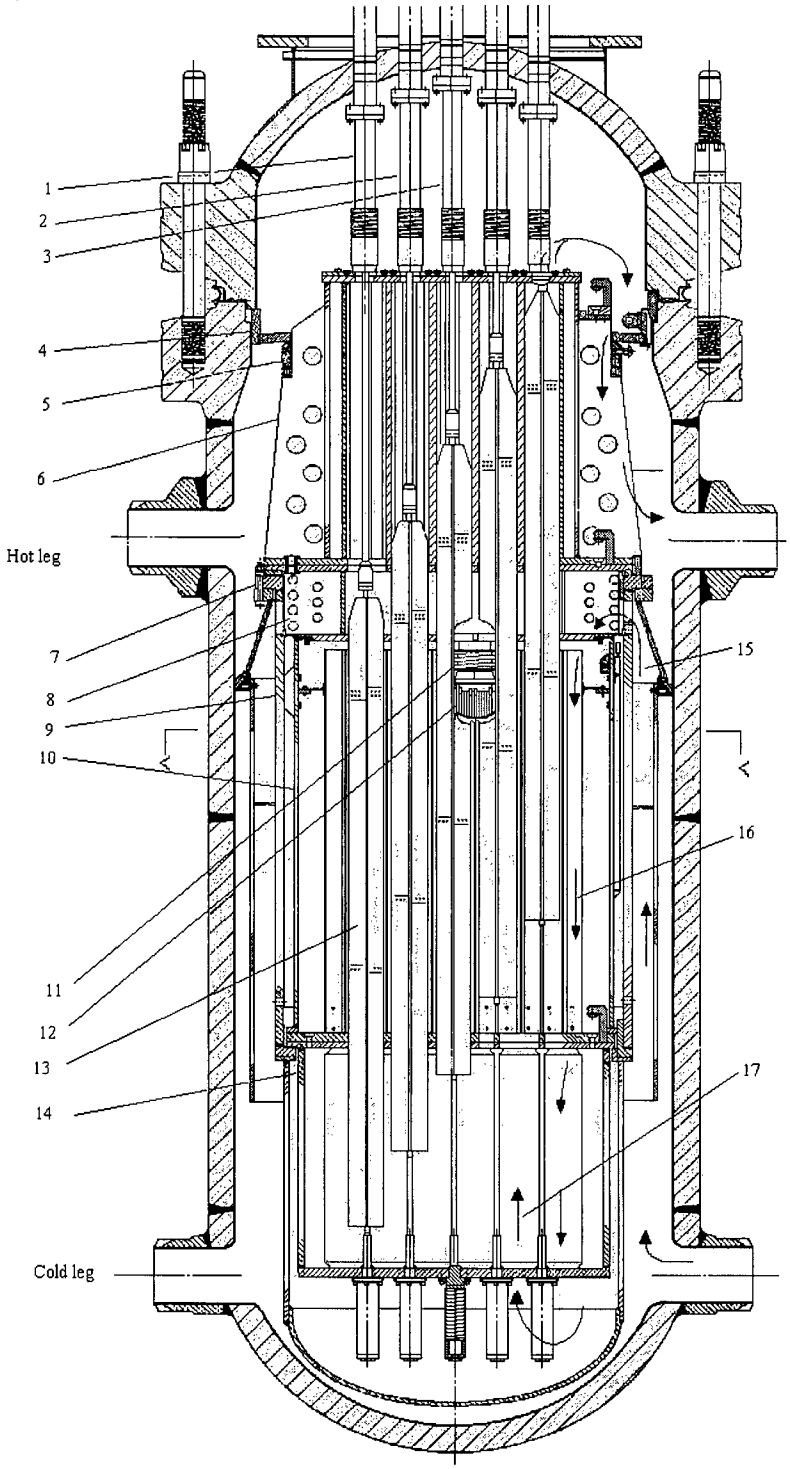

7 PRIMARY COOLANT SYSTEM

7.1 General Description

Two closed loops in the primary system circulated demineralized water through the reactor and steam generators; each loop contained two circulating pumps, one steam generator, two check valves and two stop valves with associated piping. A pressurizer was incorporated into the system on the reactor side of the starboard loop stop valve. The cooling water in each loop flowed from the discharge of the pumps to the reactor, to the steam generator and back to the suction of the pumps.

7.1.1 General Design Data

All of the primary coolant system equipment is deactivated, disabled and performs no active function. The primary coolant system was drained as completely as practical in March 1976.

At rated full power, the primary coolant system transferred 80 MW_{th} from the reactor core with a coolant flow rate of 9.2E+6 lb/hr. The normal operating volume of the primary system ranged from 1290 – 1375 cubic feet (9,650 – 10286 gallons). The inlet temperature to the reactor at this power level was 494.6°F and the outlet temperature was 521.4°F. The reactor average temperature was normally held constant at all power levels, as was the system flow rate, except for decay-heat removal.

The heat added to the primary water as it flows through the reactor was given up to the secondary system in the steam generator, where the saturated steam was generated. The temperature of the secondary system feedwater entering the steam drum was normally 345°F. The steam generated for the design load condition was 303,000 lb/hr. The heat transport system was designed for a maximum allowable working pressure of 2000 psig on the primary side and 800 psig on the secondary side. The maximum main primary coolant loop heatup rate was limited to an average of 40°F per hour; its cooldown rate was limited to 50°F per hour. These limits were established to prevent overstressing the reactor vessel flange.

Each loop in the primary system could be vented and drained. Primary water expansion volume for heatup and cooldown transients was readily available from two makeup storage tanks (PD-T2 and PD-T3). The vents were connected to the gaseous waste disposal (WL) system header and the drains were connected to the equipment drain and waste collection (PD) system.

The primary system equipment is arranged on a single supporting structure that offered little restraint to the containment vessel (Figure 7-1). This is accomplished by locating the heaviest component (the reactor vessel) on the centerline of the containment and as close to the bottom of the containment as possible. The next largest components (the steam generators) are located in the widest part of the containment on the port and starboard sides of the reactor. With this arrangement of the major components, a steel supporting structure was designed to adequately support the equipment under normal conditions and under the design pitch and roll conditions. Sway braces have been added to assure that the reactor vessel will be laterally supported if the ship capsizes. With this structure, all loads are carried into the ring girders of the containment in the lower quadrant of the containment vessel. There is no connection between the structural steel and the hemispherical ends of the containment, nor to the middle or upper quadrants of the containment, to produce restraints to the free flexure of the containment shell.

The major components of the primary system-the reactor vessel, pressurizer and the steam generators-were built, inspected and stamped in accordance with contemporary USCG and ABS regulations. Where existing regulations did not apply, the ASME code was used as a guide and the matter was referred to the AEC and USCG for approval.

7.1.2 General Performance Data

7.1.2.2 Leakage From Primary System

During the NSS's operating period, most of the leakage from the primary system was from the buffer seal (SL) system reciprocating charge pumps and from the diaphragm-operated relief valves. Maintenance techniques for the buffer seal charge pumps (which took suction downstream of the primary system demineralizers) were steadily improved. Improvements in the design and testing sequence of the relief valves reduced the leakage. As a result of these improvements, leakage was reduced from a maximum of 1200 gpd to 50-100 gpd. Leakage from the buffer seals of the control rod drive shafts and from the valve stem packing was always well within acceptable and anticipated limits.

7.1.2.2 Vibration

The primary system was subjected to propeller-induced vibrations that were transmitted directly through the hull of the ship. During the design of the reactor plant, the vibration characteristics of the primary system were analyzed using a scale model. As a result, a system of energy-absorbing hydraulic vibration dampers were designed and installed on the major components to prevent harmful vibration of the primary system in the range of the propeller blade frequency (5 to 10 cps).

Figure 7-1 Plant Arrangement in the Containment Vessel

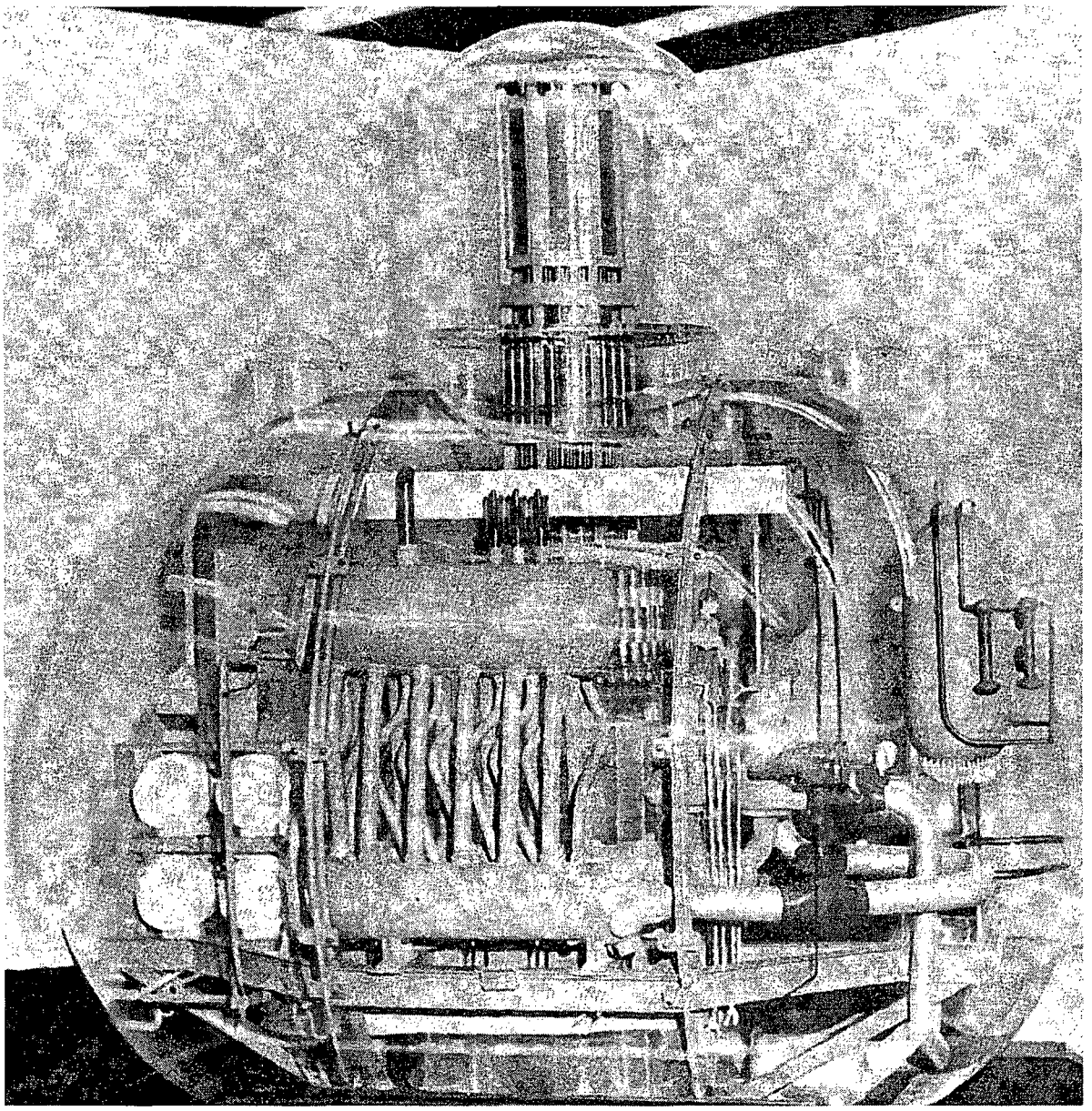

7.1.2.3 Water Chemistry

The water chemistry of the primary, secondary and cooling water systems of the NSS was carefully controlled to limit corrosion and activation. The primary system water quality was maintained to conform to the standards shown in Table 7-1. See 8.6 for additional description of Water Chemistry and Control.

Table 7-1 Primary System Water Quality

	Maximum amount
Total solids, ppm	3.0
Dissolved solids, ppm	1.0
Chloride, ppm	1.0
Dissolved hydrogen, cc STP/kg water	20 to 40
pH	6.0 to 9.5

The water chemistry program was effective in controlling corrosion and activation of the water systems. Typical measurements of corrosion product activity one day after shutdown were 130 mR/hr in the vicinity of the steam generators and 25 mR/hr near the reactor vessel.

7.1.2.4. Radiochemistry

A sustaining program of radiochemical measurements was conducted during the operating period of the NSS. Measurements were begun prior to initial operation of the reactor. Measurements of the system background indicated that the primary system was radiochemically clean. At the time of criticality, the multi-channel gamma spectrometer was used to obtain gross spectrum activity and energy peak decay of the primary coolant. At power levels above 100 kW and prior to power range testing, only F-18 and N-13 were observed; this was normal for pressurized-water reactors. The primary system radioactivity characteristics were continuously evaluated by measurements of gross-15-minute-degassed and gross-iodine-activity samples. Extrapolated to 100% power, gross activity was 5.5E-2 μCi/ml and gross iodine activity was 1.2E-4 μCi/ml immediately after initial operation.

A very slight uranium surface contamination of the fuel pins was indicated. Iodine studies were made after power transients and after a scram, but no significant changes in iodine level were observed. The amount of fuel element surface contamination by natural uranium was determined by calculations based on fission-product activity in the coolant. The results indicated a uranium concentration of approximately 5.0E-2 μCi/cm^2 of fuel element surface. This amount of contamination appeared to be a practical lower limit and caused no operational problems.

Table 7-2 Primary System Radiochemistry

Nuclide	**Percentage of gross activity**
N-13* (* = Not removed by degassing)	1.25
F-18	14.9
Mn-56	77.9
Na-24	4.0
Gross I	0.3
Cs-138	0.12
Ba-139	0.04
Total strontium	0.05

A sample of primary coolant was taken when the reactor was at full power and was analyzed for suspended solids. More than 99% of the activity was Mn-56. There was no detectable Fe-59, Co-60, Co-58, W-187, or Cr-51. The total activity of a degassed sample of primary system water was

shown in Table 7-2.

The gross activity of the degassed primary system water typically remained at the level of 5.0E-2 μCi/ml. Similarly, the gross iodine activity was typically 3.0E-4 μCi/ml and the gross strontium activity was 2.0E-6 μCi/ml.

Figure 7-2 Reactor Vessel during Fabrication

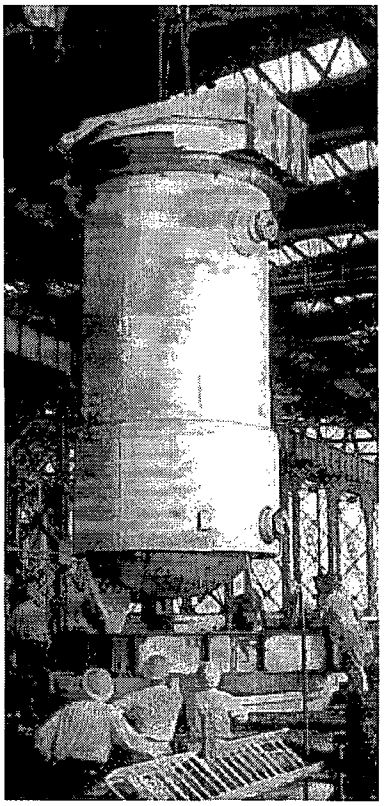

7.2 Reactor Vessel

The 6½ inch thick walls and 6 inch thick hemispherical closure heads of the 98-inch-ID reactor vessel were constructed of SA-212B carbon steel, designed to withstand 2000 psig internal pressure. The reactor vessel is shown in Figures 7-2 and 7-3. Inside surfaces of the reactor vessel were clad with low-cobalt, type-304 stainless steel to inhibit corrosion and minimize corrosion products in the primary coolant (See also Figure 6-1, Reactor Internals).

The overall height of the reactor vessel is approximately 27 feet, exclusive of the control rod drives, which extend another 21½ feet. The "empty" vessel weighs approximately 285,000 pounds. Two nozzles located in the bottom head and two in the upper shell section provide connections for the primary coolant piping. A removal upper head provides access for loading and unloading the reactor core. The head was attached by 48 studs, each of which was 5 inches in diameter and weighs 350 pounds. Following permanent defueling in the Fall of 1971, the head was reattached with six studs.

The seal between the reactor closure head and the reactor vessel was provided by two O-ring gaskets. Three stainless steel thermal shields protect the reactor vessel walls from thermal stresses induced by gamma heat generation and from radiation damage. The outer thermal shield was permanently attached to the vessel, which was surrounded by glass wool insulation approximately 3 inches thick to reduce heat losses.

In 2005, a hole was drilled through the reactor pressure vessel wall and inner weld deposit cladding, and finally through the outer and middle thermal shields to determine the Curie content and radionuclide composition.

Figure 7-3 Reactor Vessel

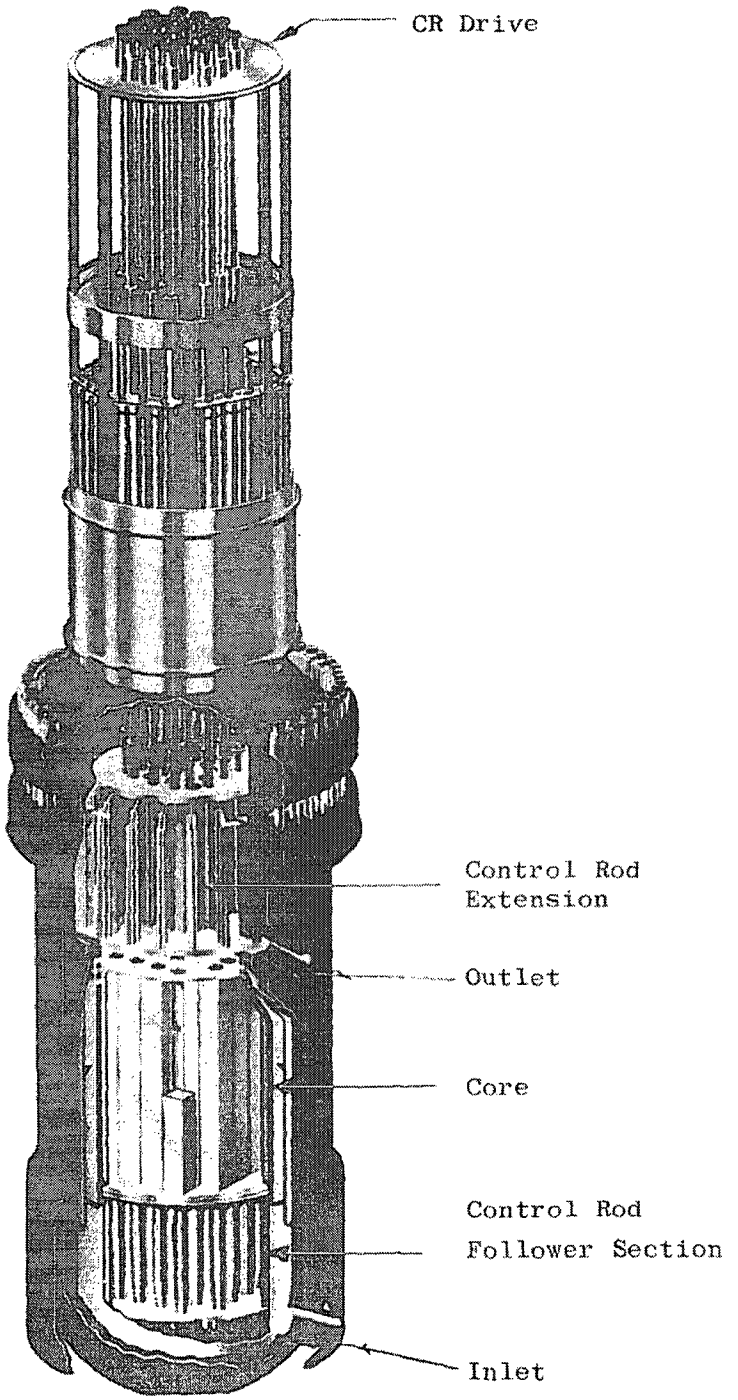

7.3 Steam Generators

Both steam generators consist of a steam drum and a U-tube, U-shell heat exchanger with primary piping connected to the inlet and outlet nozzles on the heads of the shell (see Figure 7-4).

Figure 7-4 Steam Generator

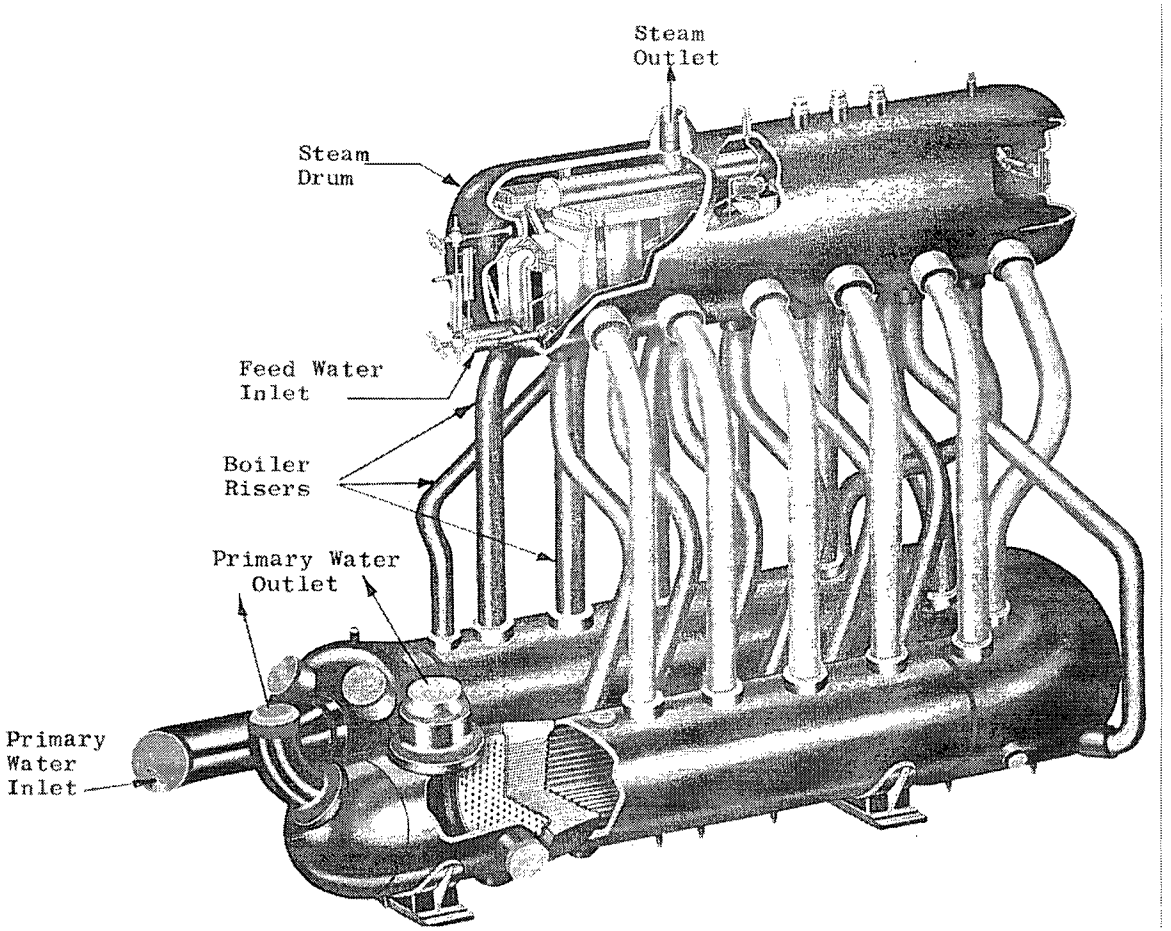

The shell side of the heat exchanger section is connected to a conventional steam drum above the heat exchanger by means of 13 risers and 8 downcomers. The risers and downcomers were designed to ensure natural circulation at all loads and attitudes of the ship within the design pitch and roll conditions. Cyclone separators and scrubbers in the steam drum supplied dry saturated steam at the outlet nozzles. The entire steam generator is supported on saddles that are bolted to the primary system support structure.

The primary water tubes are type-304 stainless steel. The steam drums, risers, downcomers and the shell side of the heat exchangers are carbon steel (USCG 51.04). The channel ends and the tube sheets were also fabricated from carbon steel, but are clad on the inside with type-304 stainless steel. See 8.1 for additional detail.

The basic control for the steam generators was a three-element feed-water control that used steam flow, water flow and steam generator (boiler drum) level as controlling signals. Steam flow and feedwater flow measurements were compared by a ratio relay, which furnishes a signal to a standatrol. The standatrol

incorporated the effect of steam generator (boiler drum) water level and supplied the output signal that controlled the feedwater flow.

In March 1976, both steam generators and piping were drained as completely as practical. The water on the secondary side of the steam generators was transferred to a double bottom tank below the reactor compartment. The isolation valves outside of the containment vessel were shut.

7.4 Pressurizer

An electrically heated pressurizer (see Figure 7-5) was used to maintain the primary system pressure at 1750 psia under normal steady-state conditions. The steam space of 92 cubic feet provided a surge volume for the primary coolant and, in conjunction with the spray water and heaters, limited system pressure fluctuations. Liquid water (62 cu ft) in the pressurizer provided the expansion volume needed in outsurges. The pressurizer limited load-change-induced pressure transients between 1695 and 1800 psia.

The pressurizer was designed for a pressure of 2000 psig and a temperature of 650°F. The overall height of the vessel is 18 feet, 11 inches and the inside diameter is 4 feet, 6 inches. The wall thickness is 3-5/8 inches and the heads are 2-7/8 inches thick. The base material is type SA-212, grade B carbon steel clad with 0.109 inch of type-304 stainless steel (SA-240, grade S).

The pressurizer normally contained a two-phase mixture of water and steam. The lower section of the pressurizer contains electric heaters which evaporate the primary water contained in the pressurizer, thus creating a pressure on the primary system through the outsurge nozzle in the bottom of the vessel. An insurge-outsurge line is connected (externally) to the bottom of the vessel and a spray line is connected (externally) to the top of the cylindrical shell section. Spray flow was controlled by the spray control valve, which was automatically controlled by the pressurizer pressure controller. Thermal sleeves are provided in the insurge-outsurge nozzle and in the spray nozzle to protect the vessel shell from thermal shock during surges into the pressurizer.

The pressurizer had three pressure relief valves. One of these, a pilot-actuated valve (PR-3V), would have opened first in an excessive pressure surge (>1930 psia). A remotely operated isolation valve (PR-2V) was provided in series with the pilot-actuated relief valve. In addition to the pilot actuated valve, there were two spring-loaded, self-actuated relief valves (PR-1V & PR-24V) that were capable of limiting a pressure surge if the pilot-actuated valve was inoperable. A three-way, motor-operated shutoff, valve (PR-25V) was located between the pressurizer and the self-actuated pressure relief valves to permit isolation of one, not both, of the valves. Each valve was designed to pass enough flow to limit system pressure to 2000 psig for the design maneuvering rate (load reduction of 100 to 20% full power in 3 seconds with no control rod motion and no spray action).

In March 1976, relief valve PR-1V was removed, the nozzle flanged and fitted with a vent, provided with an absolute filter to allow for pressure equalization. Circuit breakers for the heaters were tripped and tagged out at the switchboard.

Figure 7-5 Pressurizer

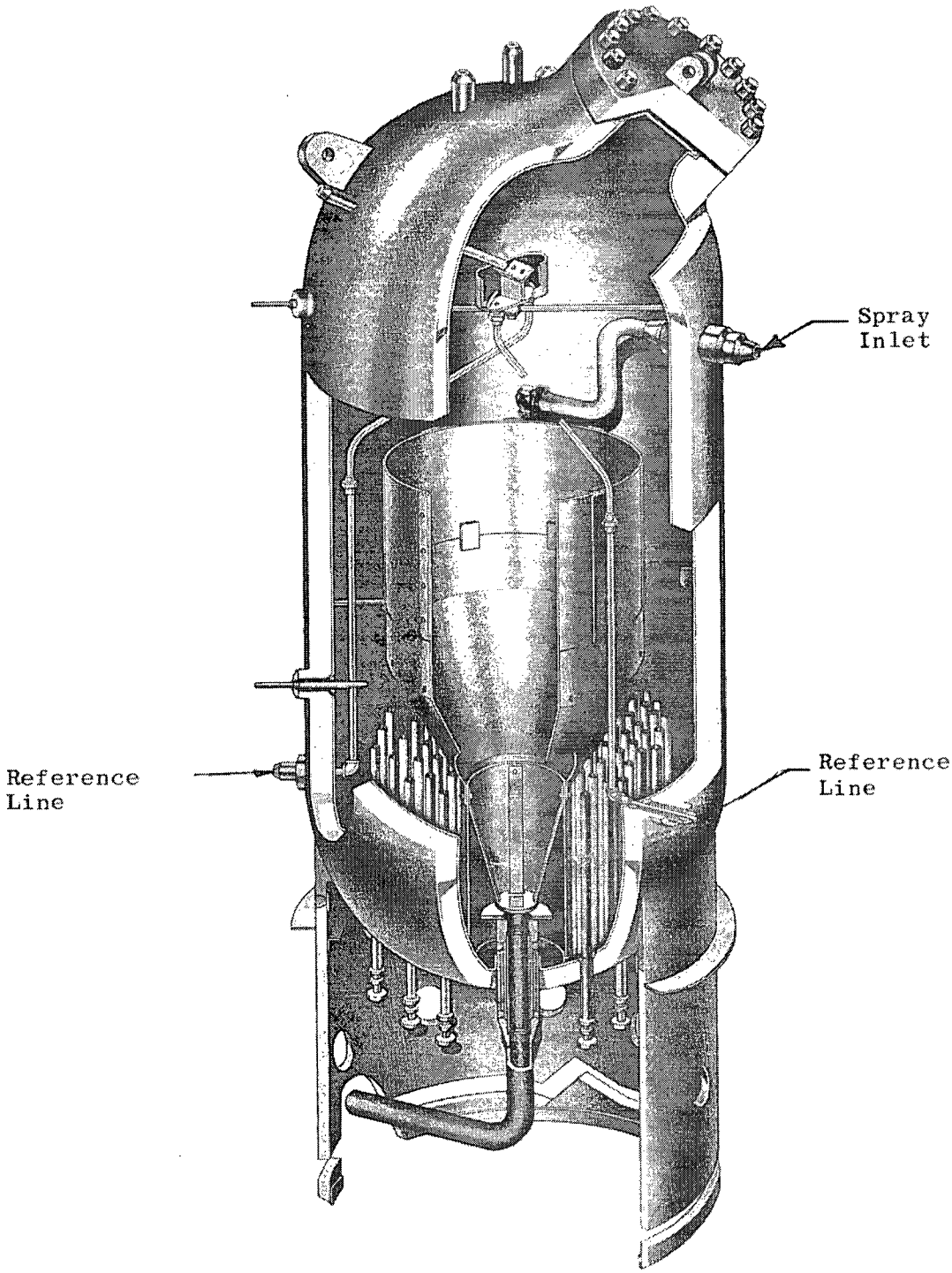

7.5 Primary Pumps

Each of the four primary pumps was a vertically mounted, single-stage centrifugal unit driven by a canned motor with zero leakage (the pump stator can was seal-welded to the volute). The pumps, although essentially identical in performance, were of two mechanical designs. One was manufactured by Allis-Chalmers and the other three pumps were made by Westinghouse. The pumps were supported by the steam generators. Each pump had an auxiliary winding to permit half-speed operation for decay-heat removal after reactor shutdown. Each pump was rated at 5000 gpm at 500°F with a discharge head of 70 psi. The canned motor was cooled by a coil through which CW system water was circulated. The motor could be operated without damage for as long as 5 minutes with no cooling flow in the coil. Bearing flush water was supplied to the pumps by the buffer seal charge pumps; this flush water then enters the primary system. The primary pumps also provide a heat source for heating the primary system before bringing the reactor up to power. The volutes and impellers of the primary pumps were made of type-304 stainless steel and the journal bearings were stellite.

As part of defueling in fall 1971, the RCP motors and impellers were removed. Blank flanges are installed over the volute openings. The interference, i.e., grating, piping, valves, ducting, etc., that was disconnected while removing the main coolant pumps were left in the removed condition in the containment vessel.

7.6 Valves

There are two gate valves and two check valves in each loop. The gate valves are located in the inlet and outlet lines of each loop adjacent to the reactor, so that either loop can be isolated from the reactor if necessary. The gate valves were activated by electric motor operators, capable of 12 in/min operating speed on the reactor outlet valves and 3 in/min on the inlet valves. They were designed to close in an emergency against 1800 psi differential and also to withstand a pressure of 2000 psi on either side when closed. All loop isolation inlet and outlet valves are open and back seated.

A small, manual, stop-check, bypass valve around the gate valve downstream of each primary pump prevented excessive pressure in an isolated loop. These valves prevented any flow toward an isolated loop but permitted flow around the inlet gate valve in case a main coolant pump was started unintentionally. When a complete isolation of a loop was desired (such as during a partial hydrostatic test), the manual stop feature of the valve was used for positive shutoff.

A check valve was located at the discharge of each pump to restrict reverse flow if a pump was not operating and to provide isolation in an emergency while the relatively slow-operating reactor inlet gate valve was closing. The check valves were the balanced-disc swing type, a design that was very effective in minimizing water hammer. Each disc has a small hole to permit a low back flow to minimize cooldown of the isolated loop.

7.7 Primary (Neutron) Shield Tank

The primary (neutron) shield tank is described in 5.3.1 and Figure 5-1.

7.8 Primary Piping

The large primary coolant pipe lines that connect the reactor pressure vessel to the steam generators (boilers) are arranged for the minimum flow length between these components consistent with flexibility to withstand the differential temperature expansion under normal and transient operating conditions. Due to the unusual strength of the primary piping and to the relatively short lengths involved, this piping was supported only at the ends.

The larger sized piping is 16¼ inches outside diameter by 1¾ inches minimum wall thickness and the smaller is 11 inches outside diameter by 1 1/8 inches minimum wall thickness. All primary piping is type-304 stainless steel, inspected and designed in accordance with ASME B31.1, USCG and ABS regulations. Low-chloride insulation is used for all primary piping to minimize the possibility of stress corrosion.

8 POWER CONVERSION SYSTEMS

The power conversion systems included the main high pressure steam system supplying the main propulsion unit and the following auxiliary engine room systems:

- The auxiliary high pressure steam system, which supplied high pressure steam to the ship's service turbine generators, main feed pump turbine and the other auxiliaries.
- The main and auxiliary feedwater systems, which supplied feedwater from the deaerating feedwater heater to the main boilers and the main blowdown evaporator.
- The main and auxiliary condensate systems, which delivered the condensate to the deaerating feedwater heater from the hotwells of the main and auxiliary condensers and from the air ejectors.
- The makeup water purification system, which purified and provided fresh makeup water to the plant from the evaporators as needed.
- The salt water circulating system, which cooled the main and auxiliary condensers.
- The intermediate steam pressure system.
- The electric power generating and distribution system.
- The instrument air and ship service air systems.

All of these systems and their components were conventional for a ship of its generation. Their arrangement incorporated best practices in conventional engine rooms with a view to accessibility and ease of maintenance. The only non-conventional feature of the engine room resulting from the nuclear power plant was the main control room with its main control console. This room was separately air-conditioned and insulated. From its five front windows, the power plant operator had a wide view of the engine room at all times. The design characteristics of the power plant are summarized in Table 8-1.

8.1 Steam Generators

8.1.1 General Description

The steam generators are deactivated, drained, disabled and performs no active function.

The steam generators were used in conjunction with the reactor to generate steam for the propulsion system. The two steam generators, one in the port loop and one in the starboard loop, were located within the containment vessel. Primary coolant water that had been heated in the reactor was circulated through these two heat exchangers by the primary pumps. Each loop circulated about 10,000 gpm through each heat exchanger. The average temperature of the primary coolant water in the steam generators was 508°F.

The steam generators are of the natural circulation, two-fluid type. Each consists of a horizontal U-shaped heat exchanger and a separate steam drum (see Figure 7-4). The heat exchanger is a single pass, shell and tube type with the primary coolant flowing through the tubes and steam being generated from the secondary water flowing through the shell side. The steam-water mixture passed upward from the heat exchanger to the steam drum through riser tubes. In the steam drum, the steam drum was separated from the water by cyclone separators and scrubbers. The steam passed though a dry pipe assembly and existed through an outlet nozzle at the top of the steam drum. The water returned to the shell side of the heat exchanger through downcomers.

Feedwater was added to the steam drum through a feedwater distribution header located in the center of the steam drum. The feedwater was directed downward into the drum, joins the water from the steam separators and flows to the downcomers.

Individual surface blowdown and chemical feed connections are provided in the steam drum sections.

8.1.2 Design Conditions

The design conditions of the steam generators are summarized in Table 8-1. The steam generators were designed, built, inspected and stamped in accordance with regulations of the United States Coast Guard (USCG) and American Bureau of Shipping (ABS). Where particular regulations did not exist, the ASME code was applied and the matter was forwarded to the AEC and USCG for approval.

Table 8-1 Steam Generator Data

Design heat load, Btu/hr	126.3E+6
Tube side conditions	
Fluid	Primary coolant water
Flow, lb/hr	4.6E+6
Inlet temperature, °F	521.3
Outlet temperature, °F	494.7
Volume, cu ft	87
Pressure drop, psig	17.5
Design pressure, psig	2000
Design temperature, °F	650
Hydrostatic test pressure, psig	3000
Shell side conditions	
Feedwater temperature, °F	345
Steam pressure, psig	455
Steam temperature	Saturated
Water volume to fill shell, cu ft	355
Water volume, operating, cu ft	227
Design pressure, psig	800
Design temperature, °F	650
Hydrostatic test pressure, psig	1200

8.1.3 Construction Features

8.1.3.1 Heat Exchangers

The horizontal section of the heat exchanger is a single pass U-tube, U-shell arrangement. The tubes are expanded and welded at both ends to the fixed tube sheets to prevent primary-to-secondary system leakage.

The heat exchanger pressure shell, steam drum, support members and other components not directly in contact with the primary coolant are fabricated of carbon steel. The U-tubes are seamless drawn type-304 stainless steel, ¾ inch OD and 0.072 inch minimum wall thickness. Each heat exchanger has 812 tubes positioned in a 11/16 inch triangular pitch.

Eight 6 inch downcomer nozzles are welded to the heat exchanger shell near the bottom. Twelve 8 inch and one 6 inch riser nozzles are welded to the heat exchanger shell along its upper surface. The riser and downcomer tubes connect the steam side of the heat exchanger with the steam drum. The downcomer tubes are shaped to provide the necessary flexibility between these pressure vessels.

8.1.3.2 Steam Drum and Internals

The steam drum is horizontal with elliptical heads. A 12 inch by 16 inch manhole at one end provides the necessary access to the internal parts.

Steam separation was provided by 20 cyclone separators located within the steam drum. The scrubber elements were mounted adjacent to the cyclone section and direct the vapor toward the dry-pipe section. The dry pipe was connected directly to a 7.750 inch ID outlet nozzle located in the upper drum section, where the steam flow was directed to the containment penetration.

Two spring-loaded relief valves are on each steam drum to protect against overpressure. They were set to relieve at 800 psig and have a total relieving capacity of 108,000 lb/hr at the lift pressure. The valve effluent discharged directly to the containment vessel.

Remote indication of water level was provided by three independent systems in each steam drum. These consisted of two differential level sensing devices and one electrical conductivity unit provided on an external standpipe. The three assemblies were read out in the main control room. An additional ultrasonic detector assembly was installed experimentally on one steam drum for evaluation.

8.2 Main and Auxiliary Steam Systems

The main and auxiliary steam systems were comparable in arrangement to those found aboard conventional ships of the same size and horsepower. The principal difference was in the utilization of saturated steam for both main propulsion and the auxiliary services. As a result of this arrangement, it was necessary to employ steam separators at several points to maintain acceptable main steam quality conditions. The steam quality limit was 0.25% and verified through an extensive series of tests performed prior to ship delivery in 1962.

8.2.1 Main Steam System

All of the main steam system equipment is deactivated, drained, disabled and performs no active function.

The main steam system pressure varied inversely as the reactor power demand and control was based on constant reactor average temperature. This pressure varied as a function of power demand and primary system average temperature.

The main steam lines run from the individual steam drum exit nozzles through a flexible containment penetration to the two main steam stop valves located in the upper reactor compartment. The stop valves are motor operated; the pushbutton control and position indicator lights are mounted in the main control room. A ¾ inch manual bypass valve (with remote position indication) was provided for heatup purposes.

Downstream of each main steam stop valve is a 2½ inch auxiliary steam dump line to the auxiliary condensers. The auxiliary steam dump was controlled by manually operated control valves. This system was not used after acceptance testing.

The individual main steam lines pass by way of expansion joints through bulkhead 126 and into the engine room, where they join in a common header downstream of the manually-operated bulkhead stop valves. Pressure and flow instruments are located in the lower reactor compartment.

The main steam passed through the steam separator, a cyclone separator mounted adjacent to bulkhead 126 and then to the main engine throttles, the ship's service turbine generators, the main feed pumps and the main steam dump system. In addition, the main steam was also reduced in pressure for utilization in intermediate and low pressure steam systems. Suitable manual and automatic steam traps and drains are provided throughout the system to ensure proper steam quality.

The main steam dump consists of a 6 inch bypass line from upstream of the main engine throttle to the main condenser. A manual shutoff valve and manually operated pressure reducing valve controlled the main steam dump. Special perforated diffusion nozzles were provided at the main condenser inlet sections to eliminate direct impingement on the condenser tubes. The system was capable of dumping 190,000 lb/hr into the main condenser. The main steam dump was used only during the initial testing of the reactor systems.

8.2.2 Auxiliary Steam System

All of the auxiliary steam system equipment is deactivated, drained, disabled and performs no active function.

8.2.3 Intermediate Pressure Steam System

All of the intermediate pressure steam system equipment is deactivated, drained, disabled and performs no active function.

8.3 Main Propulsion System

All of the main propulsion system equipment (including the main throttle assembly, high- and low-pressure turbines and main engine lubrication) is deactivated, disabled and performs no active function.

The main propulsion unit is a cross-compound turbine with high pressure and low pressure wheels directly coupled to a double reduction gear of conventional design. Steam flow to the propulsion unit is controlled by the main throttle assembly. The vacuum on the propulsion unit is maintained by the main condenser. The main propulsion system also contains auxiliary equipment for system lubrication, overspeed protection and air extraction.

8.3.1 High-Pressure Turbine

The high-pressure turbine consists of a multistage pressure-compounded impulse turbine. The bucket wheels are forged integral with the rotor shaft. The shaft is supported radially by two split-sleeve bearings and axially by a six-shoe Kingsbury thrust bearing. An external position indicator permits an operational check of rotor axial position. The turbine casing is horizontally split and

fixed on the after end to the reduction gear casing. The forward end is supported by a flexible I-beam arrangement to permit expansion.

The high-pressure turbine exhausts into a cavity, which in turn is connected through a flanged opening to the crossover line and the low-pressure unit.

8.3.2 Low-Pressure and Astern Turbine

The low-pressure turbine unit consists of an ahead section and astern section fixed to a common forged rotor. These sections are separated by a series of deflector plates mounted in a control exhaust cavity, which directs exhaust steam to the main condenser and prevents steam impingement during periods when the unit is operated alternately ahead and astern.

8.3.3 Reduction Gears

The main engine reduction gears were in an articulated, double-helical, double-reduction arrangement. The high-, intermediate-, and low-speed pinions and gears were mounted in a fore-to-aft sequence and had an overall ratio of 42.3 to 1.0. The high-speed pinions were driven by the high- and low-pressure turbines through flexible couplings.

The reduction gear internals were removed in April 1980. Only the casing remains in place.

8.3.4 Propulsion Shafting and Propeller

The propulsion shafting is mechanically disconnected from the removed reduction gear. The propeller has been removed from the tailshaft and stored on deck.

8.3.5 Main Condenser

Main condenser is deactivated, drained, disabled and performs no active function.

The main condenser is a horizontal, single-pass unit with non-divided water boxes. Sea water flow was provided from a main circulating pump discharge (20,000 gpm) through a 30-inch opening or from a 42-inch discharge from a scoop connection (32,600 gpm) in the ship's bottom. An emergency cross connection is provided to the auxiliary circulating pump discharge line. A 38-inch opening is provided for overboard discharge. Swing check valves in each inlet line prevented backflow. The condenser has 22,360 square feet of effective condensing surface made up of 5,696 (No. 18 BWG) 3/4-inch-OD tubes approximately 20 feet long. The tube ends were expanded and welded to the vertical tube sheets and were belled on the inlet ends. The tubes were installed with a 1/2-inch upward bow at the center to facilitate drainage and differential thermal tube expansion.

Seven main vertical support members were located at intervals in the condenser shell. These serve as structural strength members as well as tube alignment and support plates. The support plate nearest each tube sheet forms an isolation cavity adjacent to the tube ends which could be drained by manual stop valves serving an external drain loop at each end leading to the condenser hot well. A separate pump was provided to drain the cavity in the event of tube end failure. This system was never needed.

An expansion joint is provided in the shell arrangement to relieve unequal stresses between the shell and the tube bundle. Zinc waste plates are mounted in the water boxes to reduce corrosion of the dissimilar metals in the presence of sea water. In addition, sheet copper bonding clamps are provided along with high conductivity bronze tie bolts at the tube sheet connections to ground stray currents.

A baffled air cooler section is provided in the center of the tube nest arrangement. Steam, air, and noncondensibles entered the top of the tube nest and flow downward past the baffles and then were

redirected upward toward the air cooler section. The air-moisture mixture then flowed over a series of baffles toward the sea water inlet end of the condenser, where it was drawn outward into the air ejector suction lines.

Condensate collecting at the bottom of the condenser was exposed to bypass steam in the hot well section. This heated the liquid droplets to saturation temperature and caused the subsequent release of any entrained noncondensible vapors. These vapors were vented to the air cooler section while the deaerated condensate drops to the hot well section for removal by the condensate pumps.

Two main dump steam nozzles are provided on the shell of the condenser at the sea water inlet side. These consist of 6-inch flanges and diffuser-plates to prevent direct steam impingement on the tubes. The total dump capacity was 190,000 lb/hr. A similar auxiliary steam dump connection on the opposite end has a capacity of 35,000 lb/hr at 35 psig.

A waste discharge connection is provided to the salt water inlet side of the water box together with a sampling connection from the discharge side of the condenser. Radioactive liquid waste from the waste dilution and disposal (WD) system could have been diluted and discharged via the main condenser.

In addition to annual inspections required by the USCG, a series of periodic Probolog inspections were performed on the main condenser tubes as a check of tube wall deterioration. As a result of these inspections, some tubes have been plugged using 25% wastage as a criterion for plugging a tube. The total plugged represents a negligible loss of condensing surface area; there has been no detectable effect on the main engine or overall plant performance.

8.3.6 Main Condensate and Feedwater System

All of the main condensate and feedwater system equipment is deactivated, drained, disabled and performs no active function.

The main condensate and feedwater system consists of a regenerative heat system employing three stages of feedwater heating and two stages of condensate deaeration. Condensate was drawn from the condenser hot wells by two main condensate pumps and was pumped through the main air ejector, the low pressure heater, and the deaerating feedwater heater. The three feed pumps drew water from the deaerating feedwater heater and supplied it through the high-pressure heater to the steam generators.

8.3.2.1. Feedwater Controls

All of the feedwater control system equipment is deactivated, drained, disabled and performs no active function.

Water levels in the boilers were maintained by one of three main feed pumps. Two of these pumps were steam turbine driven and were classified as main feed pumps. The third pump was motor driven and was designated as the port feed pump. The main feed pumps were rated at 735 gpm and were capable of maintaining the required feed flow rate at maximum power. The port feed pump was rated at 125 gpm and was capable of providing the required feed flow during port operation as well as reduced sea operation (about half speed).

8.3.2.2. Main Air Ejectors

All of the main air ejector equipment is deactivated, drained, disabled and performs no active function.

The main air ejectors are twin-stage, twin-element units with surface type inter- and after-condensers. Each unit consists of two first-stage and two second-stage ejectors mounted on a single housing, which contains the inter- and after-condensers in separate compartments. Suitable valving was provided to permit the use of either or both elements.

Air and noncondensible vapors were drawn from the air cooler section of the main condenser by the first-stage nozzle assembly and discharged to the inter-condenser. Any moisture present was condensed by the cool condensate that was flowing through the tube side of the heat exchanger. The collected liquid was then drained by way of the loop seal to the main condenser. The air and noncondensible vapors were then drawn from the inter-condenser section by the second-stage steam nozzle and discharged to the after-condenser section. The after-condenser drains were directed to the atmospheric drain tank while the air and noncondensible vapors were drawn into the gland seal exhaust system.

8.3.2.3. Gland Seal Exhaust System

All of the main condensate and feedwater system equipment is deactivated, drained, disabled and performs no active function.

The main engine turbine rotors were sealed against in-leakage of air by a series of steam-sealed labyrinths located at the casing penetrations. The sealing steam was normally supplied at 0.5 to 2.0 psig from an auxiliary steam system. The excess steam from the seals was removed by piping the leak off connections to the after-condenser section of the main air ejector. The condensed steam then combines with the second-stage nozzle discharge and drains back to the atmospheric drain tank.

A gland seal exhaust fan, rated at 200 cfm with 100°F air at a static head of 10 inches of water, took suction from the after-condenser section of the main air ejector and discharged to an air cooled, shell-and-tube gland exhaust condenser. Any remaining entrained moisture was condensed and drained to the low-pressure drain system. The combined air and noncondensible vapors were discharged to an engine room exhaust system.

The gland seal exhaust system effluent was continuously sampled by the radiation monitoring system for radioactive particulate daughter products of fission gases. This detector arrangement, operating in conjunction with secondary system water sampling, served as an early warning for the presence of a primary-to-secondary system leak.

8.4 Emergency Propulsion System

All of the emergency propulsion system equipment is deactivated, disabled and performs no active function. Emergency Propulsion was provided by the 440 v-ac, 750 HP auxiliary propulsion motor.

8.5 Electrical Power Systems

The following portions of the electrical power system equipment are deactivated, disabled and perform no active function:

- Ship's Service Turbine generators;
- Auxiliary diesel generators;
- Motor generator sets;
- Battery backup systems; and,
- Emergency diesel generator.

The electrical power plant provided for the generation, distribution, and control of all electrical power on board. The main generating equipment included two 1500 kW ship's service turbine generator sets (SSTGs), two 750 kW auxiliary diesel generator sets (ADGs), and one 300 kW emergency diesel generator set (EDG). The two ship's service turbine generators are located on the upper level of the engine room, and the two auxiliary diesel generators are located on the lower level of the engine room. The voltage regulators for the SSTGs and ADGs have been removed for use on the USS Enterprise. The emergency diesel generator is located on the navigation bridge deck.

In 1994, as a condition of the ship being placed in protective storage at the James River Reserve Fleet, Ft. Eustis, any originally installed lead acid batteries on board the ship were verified to be removed and properly disposed. Since 1994, there has been minimal maintenance and testing to the ship's electrical system. Any use of these systems would require surveying prior to energizing these circuits.

8.5.1 Shore Power Connection

In 2010, a new shore connection box was installed in the port side of the C-deck athwartships passage at frame 148. It is fitted with (2) 400A plug connections that feed directly to the new shore power switchboard. Available shore power must be 3-phase, 60-cycle ac rated at 440 to 480 volts. Both the original internal and boat deck external shore power connections are no longer functional and abandoned in place.

Shore Power electrical protection is provided by the pier side shore power breaker protective features. These are inspected and tested prior to first use when the ship arrives at a new layberth.

Prior to 2010, there were two 800-ampere shore power connection boxes. One was located in the C-deck athwartship's passage, centerline aft of the engine room at frame 148and another was located on the boat deck. Both connections were amidships to facilitate connection from the port or starboard side. Either could supply the electrical load from shore facilities when the NSS was docked and the power plant was secured. The shore power provided about 450 volts at the main switchboard. A manually operated circuit breaker located on the main switchboard was used to energize the main buses. The ship's shore power breaker was originally set to trip at a continuous overload of 120% (960 amperes) for 120 seconds. Operation above 380 amperes continuous was avoided to protect the shore power connector and the shore power cable that was rated to 400 amperes. The main buses and the shore power were electrically interlocked to prevent paralleling. Therefore, the main buses had to be de-energized prior to closing the shore power circuit breaker. A console-mounted ammeter and switchboard-mounted voltmeter and ammeter indicated input power at those locations. Phase rotation could be checked by instrumentation on the main switchboard.

8.5.2 Power Distribution

8.5.2.1. Shore Power Switchboard

Prior to 2010, the electrical distribution system was operated with all 450v switchboards energized. In 2010, the electrical distribution system was modified to improve overall safety and reliability as follows:

- The 450 VAC sections of the Main Switchboard No. 1, Main Switchboard No. 2, and the Emergency Switchboard were permanently deenergized;
- Most existing 450 VAC switchgear was de-energized;
- All remaining 480 VAC distribution is fed from a new 800A, 480 VAC Shore Power Switchboard via new molded case circuit breakers (see Table 8-3);
- Existing 120 VAC distribution is used for lighting and convenience receptacle loads; and,

- Existing 120 VAC sections of the Main Switchboard No. 2, and the Emergency Switchboard are fed via new molded case circuit breakers.

A simplified one line diagram of the original distribution system is shown in Figure 8-1. The current system is shown in Figure 8-2.

8.5.2.2. Main Switchboard Description (Original)

Supply breakers to deactivated, disabled and/or inactive equipment have been verified open.

The main switchboard for the control of all normal power sources was located in the main control room. This switchboard was divided into two 450-volt sections; each section was fed by one 1500 kW SSTG and one 750 kW ADG. The two 450-volt sections were permanently deenergized by installation of a shore power switchboard in 2010.

Additionally, the main switchboard lineup included a 120-volt, three-phase, a-c bus; a 125-volt, d-c bus; and a 120-volt, a-c bus. All normal power requirements were served by these buses through group-control centers and power panels located throughout the ship.

Main switchboard bus section 1 was fed by SSTG 1 or ADG 1. Bus section 2 was fed by SSTG 2 or ADG 2.

Main switchboard bus section 1 was fed by the shore connection, and, by way of a circuit breaker, bus section 2 can be fed by the shore connection. Bus sections 1 and 2 were connected together through a normally closed bus tie circuit breaker located in section 2.

Bus section 1 includes a 125-volt, d-c bus which could have been fed from the following sources that are deactivated, disabled and perform no active function:

1. Bus section 1 by a 40 kW motor generator 1.
2. Bus section 2 by a 40 kW motor generator 2.
3. The 125-volt, d-c vital instrument bus floating battery.

A 120-volt, single-phase, 60-cycle, a-c vital bus is also included in the bus section 1 lineup. The 120-volt, a-c final bus was fed by the two 25 kW motor generators which were connected to the 125-volt, d-c bus. These motor generators are deactivated, disabled and perform no active function.

Bus section 2 includes a 120-volt, three-phase, 60-cycle bus fed from the Shore Power Switchboard after modifications in 2010. Originally, bus section 2 was fed from bus section 1 or 2 by way of an automatic transfer switch and a bank of three 50 kVA transformers. Bus sections 1 and 2 are also connected to the emergency switchboard byway of an automatic transfer system located on the emergency switchboard.

All outgoing feeders from the 450-volt buses of the main switchboard were protected by Westinghouse Tri-Pac, molded-case circuit breakers with the exception of the drawout air circuit breakers for the auxiliary propulsion motor. All outgoing feeders from the buses for 125-volt dc, 120-volt, single-phase ac, and 120-volt, three-phase a-c are protected by molded-case circuit breakers.

Figure 8-1 Original Electrical Distribution System

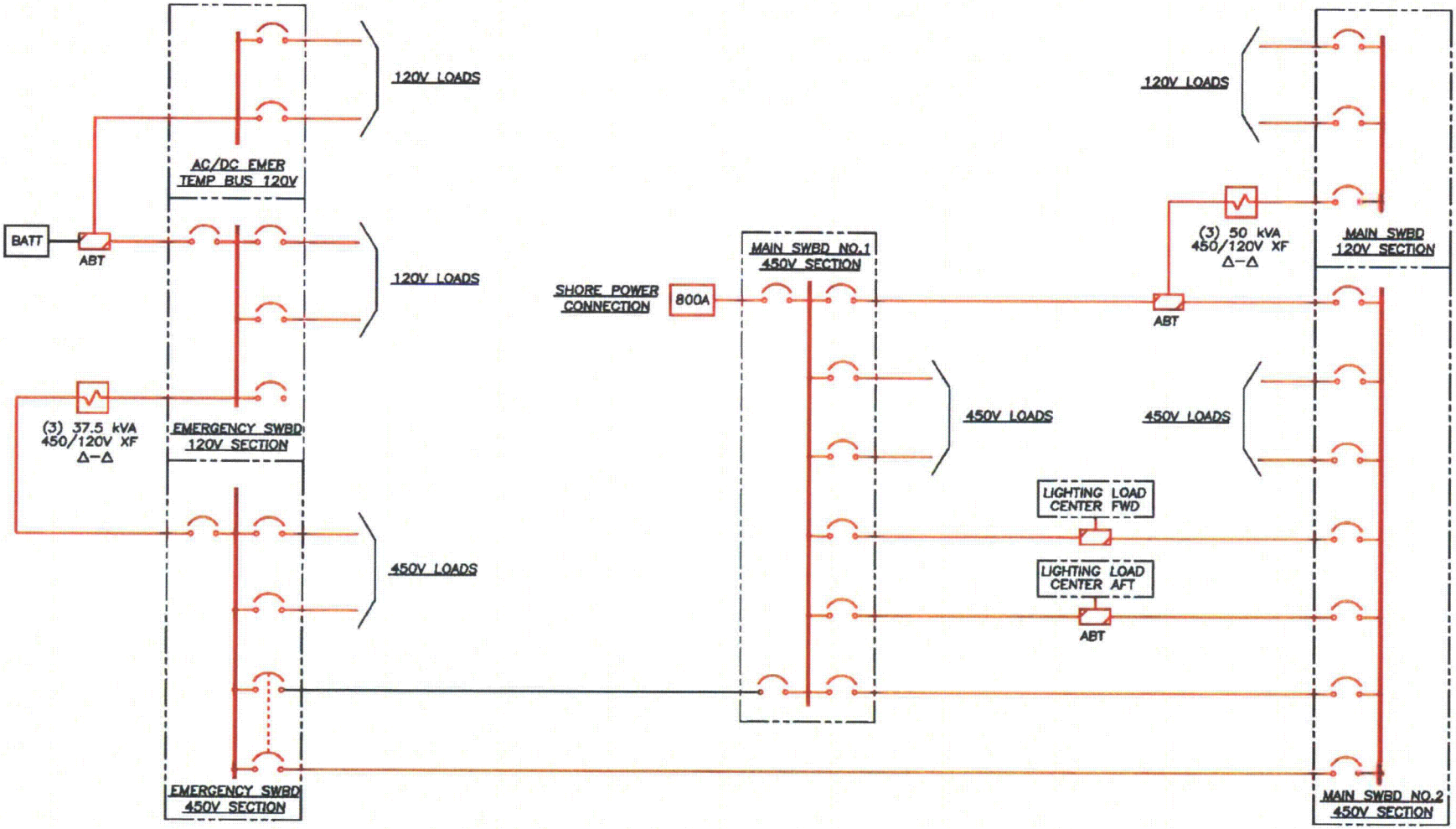

(Energized Distribution shown in Red)

Figure 8-2 Current Electrical Distribution System 480 VAC

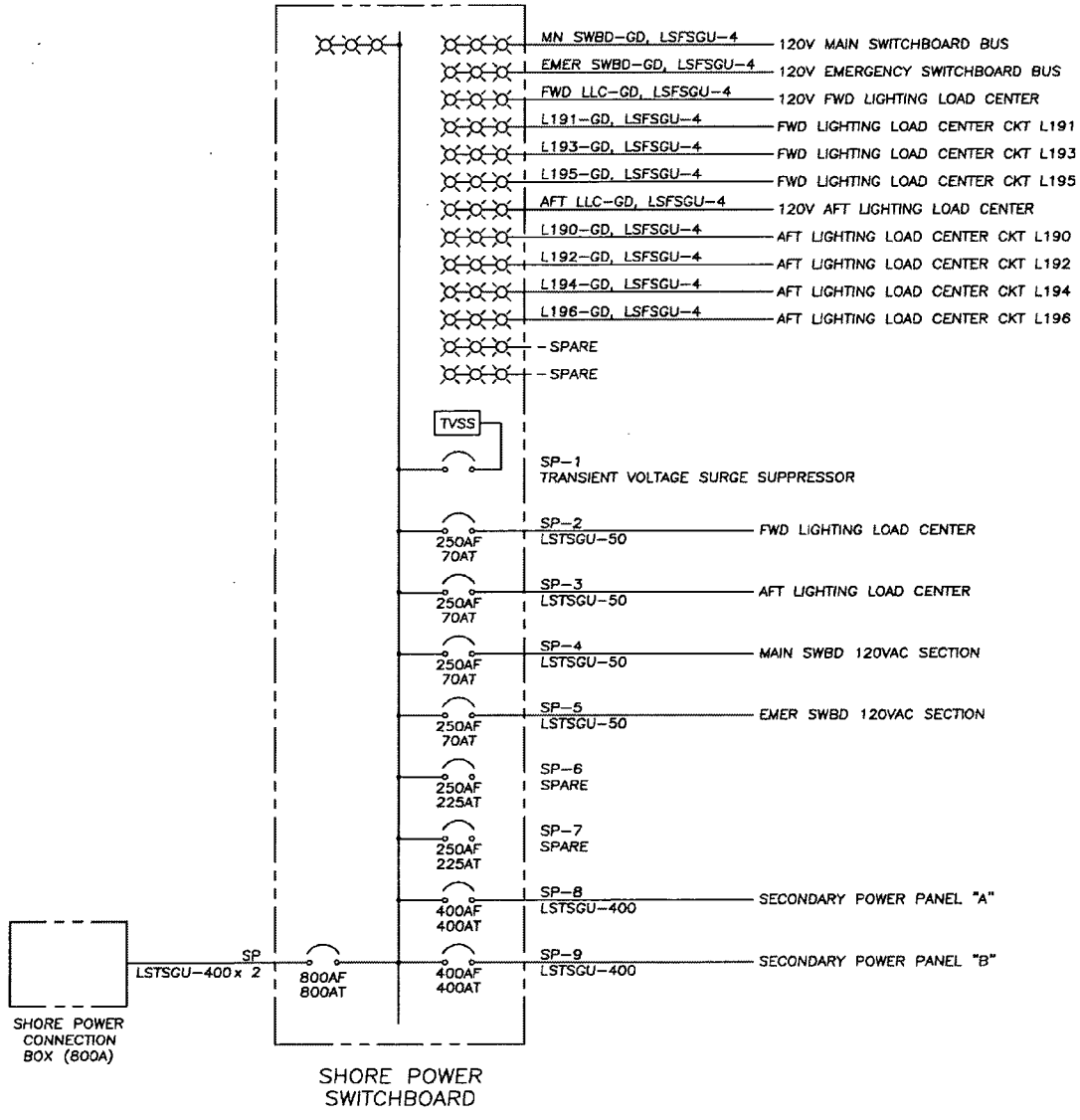

The vital instrumentation bus fed power panels D-143-1 and D-143-3, which supplied vital loads such as:

1. Nuclear instrumentation,
2. Radiation monitoring system.
3. Auxiliary diesel generator governor control.
4. Auxiliary diesel generator automatic starting.
5. Reactor critical instrumentation,
6. Ford instrument boiler level indicator.
7. Data acquisition system.

Power panel D-143-3 had an alternate power supply from the emergency switchboard, 120-volt, a-c final bus through a high-speed automatic bus transfer switch located in the main control room. This alternate source of power ensured starting the auxiliary diesel generators in the event of loss of the vital bus.

8.5.2.3. Main Switchboard Operation

Sections 1 and 2 of the main switchboard were connected through an electrically operated bus tie breaker. If the tie breaker opened as a result of an overload condition on one section, the nonvital loads were released from the board through their respective circuit breakers, and the auxiliary diesels would have started. If it was desirable to manually split the bus operation without losing the nonvital loads, the circuit breaker could be locked in the open position. If the system was operated as a split board, a condition of undervoltage would have caused each auxiliary diesel generator to start and come on to its respective bus. After tripping the tie breaker, if it was desired to close any nonvital feeders, the pushbutton on the breaker trip could reset the auxiliary contacts. In the event of a bus fault, the bus tie breaker would have opened before the turbine generator breaker to protect the auxiliary diesel generator on the un-faulted bus.

8.5.2.4. Group Control Centers

Seven group control centers were provided, each of which consists of circuit-breaker-type combination motor starters mounted in a free-standing, drip-proof cabinet. External connections to the individual motor starters were wired to the terminal boards in a terminal compartment at the bottom of each stack of controllers. The arrangement permitted connecting all external cables from the front.

Group control centers A1 and A2 had controllers serving nonvital loads in the reactor auxiliary systems. Group B consisted of four separate, free-standing controllers for the high and low speed windings of the primary coolant pumps. Groups C1 and C2 had controllers serving propulsion auxiliaries. Groups D1 and D2 had controllers serving vital loads in the reactor auxiliary systems, including those required for safe emergency shutdown and cooling.

Each controller in group B had an individual feeder from the main switchboard and included separate feeders for each primary coolant pump motors' high and low speed windings. The primary coolant pump motors were removed in fall 1971. The remaining group control centers are supplied from either main switchboard section 1 or 2 and have automatic bus transfer switches to transfer to the alternate source in the event of failure of the normal source. Group control centers are located as shown in Table 8-2.

Table 8-2 Group Control Centers

Designation	Location
A1	Engine room, upper level, starboard
A2	Engine room, lower level, center
B	Engine room, upper level, port, forward
C1	Engine room, upper level, starboard
C2	Engine room, lower level, center
D1	Navigation bridge deck, emergency generator room
D2	Navigation bridge deck, emergency generator room

The control centers were protected by Tri-Pac, molded-case circuit breakers mounted on the main and emergency switchboards. Individual motor controllers were operated by control switches, pushbuttons, pressure switches, etc. These are mounted near the controlled devices, on the main control console, or on the emergency cooling panel. Six of the seven group control centers had normal and alternate power supplies provided by separately mounted automatic transfer switches. Group control center B did not have an alternate power supply since each of the four controllers had a separate source of supply. The automatic transfer switches are enclosed in sheet metal, drip-proof cabinets and are equipped with a manual-automatic selector switch, a test pushbutton, and a manual operator.

8.5.2.5. Motor-Operated Valve Controls

Motor-operated valves for the various systems were controlled by individual, separately mounted contactors. The contactors for the five motor-operated valves in the emergency cooling system were supplied from power panel N-156-1 located in the emergency generator room on the starboard side of the navigation bridge deck, These contactors controlled the operation of emergency cooling valves DK-4V, DK-19V, DK-20V, DK-21V, and DK-32V. Two primary system gate valve contactors and two main feedwater stop valve contactors were fed from power panel H-122-2, which is located in the engine room lower level on the port side at frame 122. The motor controllers for primary gate valves PS-3V and PS-4V, starboard feed stop valve SS-13V, and port feed stop valve SS-16V are located in the pump room on the port side.

Two primary system gate valve contactors and the pressurizer three-way transfer valve contactor were supplied from power panel H-126-1 located in the engine room, lower level, starboard side, near frame 126. The motor controllers for primary gate valves PS-5V and PS-6V and pressurizer three-way transfer valve PR-25V were located in the pump room on the starboard side.

8.5.2.6. 480-Volt Power Panels

All breakers are molded case circuit breakers. The current 480-volt power panels are listed in Table 8-3.

Table 8-3 480-Volt Power Panels

Power panel	Service
B-102-1	Lighting load center, fwd
A-176-4	Lighting load center, aft
Main Switchboard	Main Switchboard, 120 VAC section
Emergency Switchboard	Emergency Switchboard, 120 VAC section
Secondary Power Panel "A"	Deck Machinery, 480 VAC Forward Power Panel
Secondary Power Panel "B"	Power panel A-190, Aft Shore Power Connection, 480 VAC Aft Power Panel
480 VAC Forward Power	Capstans, Salamander Heater and Gangway Winch
Aft Power Panel	Bathroom Trailer

8.5.2.7. 450-Volt Power Panels (Original)

Originally, 37 power panels were located throughout the ship to furnish 450-volt, a-c power for loads such as deck machinery, ventilation and lighting. Generally, the power panels were surface-mounted circuit breaker cabinets fed from main switchboard bus sections 1 or 2.

The original 450-volt power panels are listed in Table 8-4, which indicates service, power source, and transfer method. Prior to the shore power switch board modification in 2010, these power panels were protected either by Tri-Pac, molded-case circuit breakers mounted on the main and emergency switchboards or by molded-case circuit breakers in other 450-volt power panels. Various loads taken from these panels were controlled manually by molded-case breakers or by motor controllers.

Table 8-4 450-Volt Power Panels

Power panel	Service	Power source	Transfer
C-126-1	Stores elevator	Bus 2	
BO-134-2	Deck machinery	Bus 1	
B-123-1	Hotel stbd	Bus 1	
C-144-2	Mach. space vent.	Bus 2, bus 1	Man.
P-165-1	Quarters vent, aft	B-148-1	
A-106-2	Quarters vent, fwd	B-148-1	
A-188-1	Cargo vent, aft	Bus 1	
B-148-1	Quarters ventilation	Bus 1, bus 2	Man.
A-80-2	Cargo vent, fwd	Bus 1	
C-102-2	Laundry	B-136-2	

Power panel	Service	Power source	Transfer
A-36-1	Deck mach, 1B	A-35-1	
A-35-1	Deck mach, 1A	Bus 1	
B-136-2	Hotel port	Bus 2	
H-126-3	Mach. aux. 1	Bus 1	
D-131-2	Mach. aux. 3	H-126-3	
B-213-1	Steering gear	Bus 1, bus 2	Man.
C-162-1	Cargo elevator	Bus 1	
A-81-1	Deck mach, 2B	A-79-1	
A-79-1	Deck mach, 2A	Bus 2	
B-108-2	Reactor fuel hdlg.	Bus 1	
H-148-2	Mach. aux. 2	Bus 2	
D-130-2	Mach. aux, 4	B-148-2	
H-109-2	Stabilizer	Bus 1	
A-193-1	Deck mach, 4B	A-193-3	
A-193-3	Deck mach, 4A	Bus 2	
D-140-1	Mach, aux. 5	Bus 1	
D-141-2	Workshop	D-140-1	
B-109-2	Reactor compartment vent.	Bus 2, bus 1	Man.
H-122-2	Motor Operated valves	H-126-1	
H-126-1	Motor Operated valves	Bus 1, bus 2	Man.
B-102-1	Lighting load center, fwd	Bus 1, bus 2	Auto.
A-176-4	Lighting load center, aft	Bus 2, bus 1	Auto.
D-191-1	Supp. Boiler	Bus 1, bus 2	Man.
D-191-2	Supp. Boiler ventilation	Bus 1, bus 2	Man.
D-191-3	Supp. Boiler	D-191-1	
N-156-1	Motor Operated valves	Emerg. switchboard	
C-210-1	Shop equip	Bus 2	

8.5.2.8. 120-Volt Power Panels

Thirteen power panels are located throughout the ship to furnish 120-volt, a-c power for various ship loads. Generally, these panels are surface-mounted circuit breaker cabinets. The 120-volt power panels are listed in Table 8-5. Molded-case breakers at source buses protect these panels. Manually operated molded-case breakers control the loads.

Table 8-5 120-Volt Power Panels

Power Panel	Service	Power source
B-99-1	Lighting load center fwd.	B-102-1(a)
B-115-2	Crew's pantry	B-99-1
A-177-2	120 VAC Lighting load center aft	A-176-4 via 37.5 KVA 480/120 VAC, Single Phase Transformer
B-125-1	Galley	B-99-1
P-141-2	Service pantries	Main swbd.(b)
D-143-1	Critical instrumentation	Main swbd.(a)
B-135-2	Officers' pantry and galley	Main swbd.(b)
D-118-1	Refrigeration	H-120-2
H-120-2	Refrigeration	Main swbd.(b)
B-108-4	Reactor fuel handling	Main swbd.(b)
N-130-2	Electronics in chart room	Emerg. swbd.
N-131-1	Electronics in radio room	Emerg. swbd,
	Engine room 1C	Emerg. swbd.
(a) By way of 150 kVA transformer bank. (b) By way of 112.5 kVA transformer bank.		

8.5.2.9. Emergency Switchboard Arrangement

The emergency switchboard is a section of freestanding, metal-clad switchgear located on the navigation bridge deck. This emergency switchboard includes a 450-volt, a-c bus, a 120-volt, ac-to-dc temporary bus, and a 120-volt, d-c temporary final bus. The normal source of power for the 450-volt emergency bus was bus section 1 of the main switchboard. This power source was connected through circuit breaker 52A. Another source of power was provided from bus section 2 through circuit breaker 52B. As originally designed, in an emergency, power was supplied by the 500 kW emergency diesel generator through circuit breaker 52C. Circuit breakers 52A, 52B, and 52C were electrically and mechanically interlocked to prevent the closing of more than one breaker at a given time.

The 120-volt, a-c final bus is fed from the Shore Power Switchboard after modifications in 2010. Originally, the 120-volt, a-c final bus was fed from the emergency 450-volt bus through one of the two 112.5 kVA transformer banks. An automatic bus transfer switch provided changeover capability.

The 120-volt, d-c battery bus was fed from a 120-volt emergency battery which has been deactivated, disabled and performs no active function. The 120-volt, ac-to-dc temporary bus was fed normally from the 120-volt, a-c final bus, or, in case of emergency, it could have been fed from the battery bus by an automatic transfer switch. The 120-volt, d-c temporary final bus was fed normally from the 450-volt emergency bus through one of two 7.5 kW rectifiers or from the battery bus through an automatic transfer switch. Protection and control of the emergency switchboard were provided by the generator breaker and the various feeder breakers.

8.5.2.10. Emergency Switchboard Operation

Emergency switchboard operation consisted of setting the board up for normal and emergency power arrangements. The 450-volt section, the 120-volt, a-c section, and the 120-volt, d-c section provided continuous distribution of power to a number of normally operating auxiliary systems. The power under normal operating conditions came from either section 1 or 2 of the main switchboard through individual manual circuit breakers on the main switchboard sections. This power input to the 450-volt section of the emergency switchboard was by way of manual-automatic circuit breakers in series with the main switchboard breakers. A selector switch on the emergency board permited selecting either of the inputs as the preferred source of power.

An automatic circuit breaker control system provided capability to transfer the input breakers from either section 1 or 2 of the main switchboard or, if conditions warranted, from the emergency diesel generator output to the 450-volt section. The transfer function could be initiated on demand or on failure of the selected input breaker to supply the required voltage. If one main board input failed, the load shifted to the alternate automatically. If conditions were still not satisfactory, the emergency diesel generator would have started and immediately closed in on the 450-volt, three-phase section.

Emergency power supply status lights were located at the main and emergency switchboards to indicate the operational readiness of the emergency diesel generator and the automatic circuit breaker control system. Additionally, a failure-to-start alarm on the main switchboard would have alerted the operators to the presence of this condition at the normally unmanned emergency switchboard.

As originally designed, the emergency diesel generator could not be operated in parallel with either of the SSTGs, ADGs or shore power, but it could be fed back to the main switchboard.

The emergency batteries were charged through a battery charger mounted on the emergency switchboard. A trickle charge was normal for the unit, and a high charge commenced if the output voltage dropped as a result of a load demand.

8.6 Auxiliary Engine Room Systems

8.6.1 Instrument Air System

All of the instrument air system equipment (including the main throttle assembly, high- and low-pressure turbines and main engine lubrication) is deactivated, disabled and performs no active function.

The instrument air system provided clean, dehumidified air at various pressures for the following uses:

- Main steam stop valve control (80 to 100 psig);
- Ship's air conditioning control (80 to 90 psig);
- Diesel oil tank level indicators (40 psig);
- Control valves and tank level indicators (40 psig);
- Main control console in the main control room, signal transmitters and auxiliary panels A & B (30 psig);
- Quantichem analyzer (20 psig); and,
- Containment vessel personnel air supply (via CO analyzer).

The instrument air system consists of dual air intake filters (NI-Fl and NI-F2), instrument air compressors (NI-P1 and NI-P2) and instrument aftercoolers (NI-C1 and NI-C2) which discharged into the instrument control air tank (NI-T1). From the instrument control air tank, the air was distributed to the two air filters (NI-F6 and NI-F7) and to the pressure reducing network which supplied the various shipboard air services.

The two air compressors are vertical, reciprocating, water-cooled units that were belt driven by 20 hp, 440-volt electric motors. Each compressor has a rated output of 80 cfm at 100 psig when operating at 537 rpm. Cooling water (with chromates to inhibit rust) was supplied to the compressor and aftercooler by the intermediate cooling water (CW) system. A pressure control valve is installed in the cooling water inlet line to prevent overpressure of the compressors in the event that the CW system pressure was raised for emergency cooling.

A manually operated crossover connection is provided for the ship service air system in the event of total instrument compressor failure. Normal operation called for one of the compressors to be in operation with the second unit on standby. Local and remote instrumentation is provided to alert the operators to abnormal conditions.

8.6.2 Waste Dilution and Disposal (WD) System

All of the waste dilution and disposal (WD) system equipment is deactivated, disabled and performs no active function.

The WD system, located in the engine room, consists of a pump, regulator, valves and piping. The function of the WD system was to transfer radioactive waste water from the equipment drain and waste collection (PD) system and to accurately measure and discharge waste water to the hydrosphere through the main condenser circulating system.

A positive-displacement reciprocating pump that had a discharge capacity of 0 to 30 gph was arranged to take suction from the PD system; it discharged through a pressure control valve (WD-5V) to the salt water circulating system inlet plenum of the main condenser. Operation of the system calls for the waste transfer pump (PD-P1) to discharge to the suction side of the dilution pump (WD-P1) in the starboard buffer seal charge pump room. The dilution pump discharge rate was varied as required so that the overboard discharge activity was below acceptable limits for the zone in which the vessel was sailing.

The pressure regulator (WD-5V) on the dilution pump discharge was set at 100 psig; this precluded inadvertent direct discharge by the transfer pump because the setting was above the shutoff head of

the transfer pump. Sampling connections are provided to check the effluent activity at the dilution pump discharge and at the overboard discharge connection of the main condenser. The 20,000-gpm main condenser salt water flow mixing with a maximum dilution pump discharge of 0.5 gpm provided the required dilution factor. Relief valves are provided on the dilution pump discharge line and on the water side of the main condenser to prevent an inadvertent overpressure of the system.

8.6.3 Engine Room Ventilation System

All of the engine room ventilation system equipment is deactivated, disabled and performs no active function.

The engine room ventilation arrangement consists of a supply and an exhaust system, each operating independently. There are three supply fans and associated distribution ductwork and three exhaust fans with similar sheet metal ductwork. The total supply system capacity is 96,000 cfm, equally divided between the three axial supply fans. The exhaust system consists of one 40,000- and two 30,500-cfm axial exhaust fans. Both supply and exhaust fan units have two-speed motors that operate from either a local or a remote control station. The units were located on the navigation and bridge deckhouse tops and the controllers and switches were located at the engine room landing corridor entrance to the engine room. Emergency cutoff circuitry was provided at the CO_2 fire extinguishing system.

The control room and instrument shop were provided with an air conditioning network that contains an integral circulating fan assembly. These locally mounted units were locally controlled.

8.6.4 Blowdown Evaporator System

All of the blowdown evaporator system equipment is deactivated, disabled and performs no active function.

The blowdown evaporator is located in the lower engine room. The evaporator consists of a single shell, submerged tube heat exchanger that has an automatic level controller. Coil steam was supplied from the 85 psig auxiliary steam reducing station or from the 115 psig main feed pump exhaust header. Coil drains were directed to the deaerating feed heater or to the shell side of the first stage feed heater, as applicable.

Evaporator feed was taken from the surface blowdown connection on each steam generator (boiler) drum and directed through diaphragm operated valve operated from the main control room. Locally mounted, manually operated feed control valves worked in conjunction with the level-control feed valve to admit feedwater to the shell at a rate consistent with steam generator (boiler) water conditions. The steam vapor generated in the evaporator shell was valved into the 26-psig auxiliary exhaust line when the heat was reclaimed through action of the deaerating feed heater.

Rated blowdown of each heat exchanger was 1% of total capacity, or a total of 2650 lb/hr at 800 psig and 464°F. The evaporator output was controlled by a fixed orifice. This limited the evaporation rate to the maximum blowdown required, provided coil condition and downstream pressure were properly maintained for constant output conditions. Less than full blowdown was satisfactory to maintain the steam generator (boiler) water in the desired condition. As a result, the system was operated with manual steam control on an intermittent basis. Evaporator brine or residue was periodically sampled for density and radioactivity and was discharged overboard through a sea-valve connection.

8.6.5 Fresh Water System

8.6.5.1 Fresh Water Production

All of the fresh water production system equipment is deactivated, disabled and performs no active function.

With the exception of that procured from dockside during port operation, all fresh water consumed on board the vessel was evaporated from the sea. Two flash-type evaporators, each rated at 16,000 gpd, converted sea water to fresh water that had a chloride content of about 5 ppm. This was utilized directly as potable water and was further processed by means of a mixed-bed demineralizer (10 cubic feet) to less than 1 ppm chloride for use as secondary system makeup. Primary system makeup was further demineralized through the primary loop purification (PP) system demineralizers before it was added to the primary system. In addition to the secondary system demineralizer, two mixed-bed plant makeup demineralizers (2.5 cubic feet each) that could be used for secondary makeup processing are located in the engine room.

8.6.5.2 Fresh Water Consumption

The daily loss and control of primary and secondary water was very important. Primary system leakage was controlled by a leak off system that channels the known or anticipated leakage into suitable tanks or receptacles in the equipment drain and waste collection (PD) system. The daily consumption or loss of primary grade water averaged about 50 gallons per day; the leakage has been found to originate mostly from the pressurizer relief valves and from the buffer seal charge pump plunger shaft seals. This leakage was contained and was not a significant hazard to operating personnel or the public. Daily losses from the secondary system were estimated to average 3000 gpd during sea operation and somewhat less during port operation. The major sources of secondary leakage were pump and valve glands, sampling system discharges, whistle steam and laundry steam.

8.6.5.3 Fresh Water Storage

Potable water was stored on board in two domestic water tanks located in the engine room. These have capacities of 40.8 and 62.81 tons, respectively and were filled directly from the evaporator discharge. The secondary system storage arrangement consists of boiler-feed and distilled-water tanks having capacities of 60.88 and 21.22 tons, respectively.

8.7 Water Chemistry and Control

8.7.1 Primary System

Prior to draining the primary system in March 1976, primary water quality was maintained by implementing the primary system water chemistry and control program. Table 8-6 summarizes the water quality limits set by the Technical Specifications in effect during the operating period and the normal operating values.

Table 8-6 Primary System Water Quality

		Normal operation	**Technical Specification limits**
Solids, ppm:	Total		3.0 max
Solids, ppm:	Dissolved		1.0 max
Chloride, ppm		0.1 or less	1.0 max
Dissolved hydrogen, cc(STP)/kgH_2O		20 to 25	20 to 40 max

pH		6.0 to 7.0	6.0 to 9.5
Conductivity, μmho/cm^2		2	none

Primary system water quality was maintained by a continuous letdown of 20 gpm through the mixed-bed demineralizers and effluent filters of the PP system for the removal of corrosion products. When the reactor was critical, the pH of the system was maintained between 6.0 and 7.0 by the ratio of cation to anion resins in the mixed bed demineralizers. During subcritical periods of operation, the pH was raised to between 8.0 and 9.5 by the addition of 2 to 4 ppm of hydrazine. Conductivity was maintained at about 2.0 μmhos/cm^2 (as a result of dissolved ionized solids) when the reactor was critical. The addition of hydrazine during shutdown periods increased the overall conductivity; therefore, cation conductivity was checked to observe the hydrazine effects.

The alloys used in the primary system were corrosion tested at operating conditions and at more severe conditions of temperature and water quality. During the operating period, primary system materials showed excellent corrosion resistance (i.e., less than 15 mg/dm^2-month) This corresponds to a penetration of about 9.0E-5 inches/yr in austenitic stainless steel. This rate was considered negligible for the design life of the reactor system.

Chloride concentration in the primary system was maintained at 0.1 ppm or less; a concentration of more than 1.0 ppm requires immediate system shutdown. Chloride conditions were precluded by maintaining conductivity at 0.5 μmhos/cm^2 or less during normal critical operations and at 2.0 μmhos/cm^2 or less during subcritical conditions. Suspended solids were checked by a comparator method used in conjunction with 0.45-micron millipore filter paper samples.

The dissolved oxygen concentration was kept at 0.01 ppm or less by maintaining a hydrogen concentration of 20 to 40 cc/liter of primary coolant. During reactor operation, the hydrogen concentration was maintained by a hydrogen overpressure in the buffer seal surge tank. During periods of reactor shutdown, hydrazine was used to maintain the water hydrogen concentration.

Makeup water for the primary system was maintained with less than 1.0 ppm chloride and 5.0 ppm total dissolved solids. To assure primary grade quality, the water passed through the secondary system ion exchangers and the PP system before it entered the buffer seal surge tank.

8.7.2 Secondary System

8.7.2.1 Steam Generators

Prior to draining the steam generators in March 1976, the quality of secondary system boiler water was maintained by implementing the secondary system water chemistry and control program as summarized in Table 8-7:

Table 8-7 Steam Generator Water Quality

Steam Drum	
Total dissolved solids, ppm	650
Chlorides, ppm	1
Oxygen, ppm	0
pH (by coordinated phosphate)	10.5 to 11

Sulfite, ppm	20 to 30
Feedwater	
Total dissolved solids, ppm	0.5
Chlorides, ppm	0.01
Oxygen, ppm	0.007

A high pH (10.5 to 11) was maintained in the boiler water by adding a concentrated solution of trisodium phosphate. This solution was pumped into the steam drum from a storage tank by a variable capacity, positive displacement pump. Disodium phosphate was added similarly from a separate tank and pump. This solution was controlled to maintain the pH and phosphate concentration in a ratio that will keep trisodium phosphate in the boiler water without permitting the formation of sodium hydroxide was prevented from forming; this process was called the coordinated phosphate treatment.

The small amount of residual oxygen left in the boiler feedwater after it passed through the deaerating feedwater heater was removed by the reaction of the oxygen with sodium sulfite, which was maintained in the boiler to assure that the oxygen was eliminated. Oxygen elimination was necessary because the oxygen promotes pitting corrosion of carbon steel in high pH water and it contributed to chloride stress corrosion of stainless steel.

An elevated pH was maintained in the boiler feedwater by injecting morpholine into the feedwater at the feedwater pump discharge. A variable capacity, positive displacement pump moved the morpholine from its storage tank to the injection point. Morpholine was a volatile derivative of ammonia which ionizes in water to increase the pH. It vaporized with the steam in the steam drum, condenses and redissolves in the condensate in the condenser. Morpholine maintained the condensate and feedwater at an elevated pH throughout the feedwater system, inhibiting the general corrosion of the system.

When the steam generators were idle for prolonged periods, they were filled solid in a wet layup condition. The water was circulated daily by a circulating system within the containment vessel. The total dissolved solids concentration in the steam generators was limited to 650 ppm during operation and to 1300 ppm in a wet layup condition. These values were checked every third day. Chlorides were maintained at less than 1.0 ppm with normal values less than 0.1 ppm. The units could not be operated at greater than 1.0 ppm for a period not exceeding 48 hours, or 5.0 ppm maximum. Phosphate ratios were maintained in accordance with the coordinated phosphate program for pH control. A normal ratio of 2 to 1 trisodium phosphate to disodium phosphate was maintained in the boiler drums. Total phosphates were maintained at 100 to 300 ppm when the heat exchanger was in operation and at 400 to 600 ppm during wet layup periods.

Sodium sulfite was used as an oxygen scavenger in boiler water and was maintained at 20 to 30 ppm under normal conditions. If a chloride condition develops, or if high oxygen content was noted in the makeup feedwater, these values will be increased by a factor of 2 to 3.

8.7.2.2 Boiler Condensate and Feedwater

Boiler feedwater was maintained at a pH of 9.0 to 9.5 by the presence of 4 to 18 ppm morpholine in the boiler steam drums. Dissolved solids were determined from conductivity measurements of the feed and condensate systems. Since the morpholine influenced

conductivity, a cation column was inserted to strip the morpholine in the test sample. The lowest sensitivity value that can be obtained with the inline sampling instrument was 2.0 $\mu mhos/cm^2$ which was equivalent to 0.33 ppm solids. This was the established alarm point set for the instrument. The presence of greater than 1.0 ppm dissolved solids requires recirculation of the system condensate through the mixed-bed polishing demineralizer.

Chlorides needed to be maintained below 0.1 ppm in the feed and condensate systems. Chloride content was measured by the Quantichem automatic chloride analyzers, which was provided for sampling the content in several secondary systems.

Dissolved oxygen was removed from the feedwater by the deaerating hot well sections of the main and auxiliary condensers operating in conjunction with the deaerating feedwater heater. A limit of 0.007 ppm was established for the deaerating feedwater heater outlet. Periodic analyses were performed under operating conditions to determine the dissolved oxygen content.

8.7.2.3 Intermediate Cooling Water System

The CW system was employed as the cooling medium for numerous primary system components. Very close water quality was maintained on this system because type 304 stainless steel was used in components that were in direct contact with the CW system water. A pH value of 10.0 to 11.0 was maintained using a coordinated phosphate treatment. Dissolved solids were determined from a neutralized conductivity reading and were limited to 2000 ppm. Phosphates were maintained at between 100 and 300 ppm. Chromates were added to inhibit corrosion of the system and were maintained at between 500 and 1000 ppm. Chlorides were limited to 1.0 ppm maximum under operating conditions. At 5 ppm Chloride content, a reactor shutdown was required. The 1.0 ppm value could not be exceeded for longer than 48 hours without shutting down the reactor.

8.7.3 Laboratory Arrangements

All of the laboratory equipment is deactivated, disabled and performs no active function.

Provisions were made for sampling radioactive and nonradioactive water systems throughout the vessel. The Forward Control which includes on C-Deck Cold the Water Chemistry Lab (Port) and Radiation Sampling Room plus on D-deck the Gas Adsorption Equipment Room (port) and Radiation Sampling Room (stbd) includes provisions for a forward sampling area located adjacent to the secondary shield and within the confines of a controlled area. This area includes a sink and an enclosed, ventilated hood arrangement. Samples of primary water and waste liquids could be taken at the sampling sink (see 9.2.5, Primary Sampling). The amount of dissolved hydrogen in the primary system was determined using the hydrogen analyzer. The ventilation exhaust was led to the inlet section of the reactor compartment filter housing. Sink drains were piped directly to the equipment drain and waste collection (PD) system.

Adjacent to the main control room is another Hot and Cold Water Chemistry Laboratory. This space was partitioned to provide a closed working area for handling radioactive water samples. It includes a separate sample hood, fan, demister and absolute filter. A drain-collecting tank was provided for hot sink drains. Radioactive samples could be passed through an access port from the engine room to avoid transporting the samples through the main control room.

The secondary system samples were checked in the adjacent semi-enclosed space, which also has a sink, ventilation fan and filter assembly. Samples from the intermediate cooling water, port and starboard boilers, main and auxiliary condensate and main feed system were delivered to the laboratory through a pipe and valve arrangement.

8.7.4 Instrumentation

The instrumentation used in analytical determinations of water quality was mounted in the chemistry laboratory. This included equipment used to determine chloride content, conductivity, dissolved oxygen, pH and dissolved chemical content. In-line instrumentation was provided for conductivity indications of the purification system influents as well as the secondary system condensate and boiler feedwater.

Alarm points on each indicating system alerted the operator to any unusual conditions that require an immediate analytical check of system specifications. The automatic secondary system Quantichem unit recorded chloride concentrations in addition to alarming abnormal conditions.

8.7.5 Operating Experience

The water quality standards established at the time of ship construction required no significant changes. During construction and initial sea trial testing, there were no significant water problems. The hot flush period did result in several crud bursts which plugged the flushing filters; however, the situation was corrected. During an early sea trial a high chloride condition developed in a heat exchanger as a result of a tube leak in the gland seal exhaust condenser. The reactor and secondary plant were secured and the situation was corrected.

During the prolonged 1963 outage, an auxiliary condenser tube was found to be defective and leaking into the shell side of the condenser, which was being used as a makeup storage tank for the intermediate cooling water (CW) system. This resulted in a chloride level that exceeded the prescribed limits. The reactor was secured and no major problems were encountered after the CW system was dumped and flushed. Subsequent to this failure, a scheduled Probolog check of main and auxiliary condensers and saltwater cooled heat exchangers was undertaken as a check of system deterioration.

During its operating period, there were no water chemistry problems in the primary system that required shutdown. Minor water chemistry problems did occurred, but their causes were traced promptly and corrective actions have precluded any aggravated conditions.

8.8 Power Plant Performance

[Deleted]

9 REACTOR PLANT AUXILIARY SYSTEMS

9.1 Reactor Emergency Systems

9.1.1 Emergency Cooling (DK) System

9.1.1.1 Function

All of the emergency cooling (DK) system equipment is deactivated, disabled, drained and performs no active function.

The DK system removed decay heat from the core when all electrical power supplies except the 300 kW emergency diesel generator were inoperative or when the primary pumps were unavailable for circulating the primary coolant through the core. During a Maximum Credible Accident (MCA), the DK system would have helped suppress containment vessel pressure.

9.1.1.2 Description

There are two loops in the DK system. One circulated primary cooling water through the emergency cooler and pump and then through the reactor; and the other loop circulated salt water by means of a submersible sea water pump through the shell side of the emergency cooler.

The loop which circulated primary cooling water consists of the 240 gpm emergency canned pump (DK-P2) which took suction from the outlet leg of the primary coolant system port loop. The flow was directed to the helical-coil emergency cooler (DKCL) which was fitted with a bypass valve (DK-19V) and a flow control valve (DK-20V) so that the operator could control the heat removal rate. The cooldown rate was controlled from the emergency cooling panel in the emergency diesel room on the navigation deck. The return flow entered the primary coolant system in the starboard loop inlet leg. A remote-operated inlet valve (DK-21V) to the emergency cooling loop along with the two control valves isolated the system from the primary system when not in use.

The sea water circuit contains the 195 gpm submersible emergency sea water pump (DK-P1), which is located in the lower reactor compartment. The pump discharge line enters the containment, then splits into three parallel circuits which supplied cooling water to the emergency cooler (DK-C1), the emergency canned pump (DK-P2) cooling coils and the emergency containment cooling coils (DK-C2) in the containment cooling system. The return line is routed overboard through either the after cross flooding duct or the auxiliary condenser overboard discharge line. Electrically operated valves (DK-4V and DK-32V) outside the containment were used to isolate the sea water circuit.

The sea water circuit of the DK system was valved so that it could be tested periodically and then flushed with fresh water. In order to reduce fouling and corrosion due to sea water, the fresh water remained in the system until the next test cycle or until the system was put into service.

To makeup primary system water to compensate for minor leakage, water could be added from the deaerator (DC heater) by using the 31 gph emergency makeup pump (DK-P3) located at the B-deck level in the engine room. This portion of the DK system was also injected soluble poison (a boric acid concentration) into the primary system.

All DK components with exception of the makeup system and the controls are located within the collision barrier. Power was supplied to the system from the emergency bus feeding from

the emergency diesel generator. Sea water suction was provided from either of two sea chests located on opposite sides of the ship. Additionally, the main fire system was tied in as a backup sea water supply. Sea water discharge was normally through the bottom of the vessel at the centerline. However, in case of grounding, an alternate discharge was provided through the port side.

9.1.2 Soluble Poison (SP) System

9.1.2.1 Function

All of the soluble poison (SP) system equipment is deactivated, disabled, drained and performs no active function.

The SP system was an alternate means of reactivity control for reactor shutdown. The system was capable of overriding sufficient reactivity to permit the operator to bring the reactor to a cold, subcritical condition with all control rods withdrawn from the core. The system would hold down approximately 11% excess reactivity (a boric acid concentration of approximately 4½ gm/liter).

9.1.2.2 Description

The SP system consists of a 28 cubic foot mixing tank (SP-T1) containing two immersion heaters (SP-H1 and SP-H2), an agitator (SP-F1), valves and piping. The mixing tank is located in the engine room at the navigation bridge level.

For ease of handling, prepackaged boric acid crystals (400 pounds) were added to hot water in the mixing tank and agitated to form a uniform solution. The solution temperature was maintained at 200°F by immersion heaters, which were controlled by the thermostat (TC/SP-2).

The solution was pumped from the mixing tank into the DK system with the emergency makeup pump (DK-P3). The boric acid was circulated into the primary system by the emergency canned pump (DK-P2), which, with or without assistance from the primary coolant pumps would have dispersed the boric acid solution uniformly throughout the primary system water.

9.2 Reactor Auxiliary Systems

9.2.1 Primary Loop Purification (PP) System

9.2.1.1 Function

All of the primary loop purification (PP) system equipment is deactivated, disabled, drained and performs no active function. The demineralizers and their resins were removed in March 1976.

The principal function of the PP system was to assure that the impurity concentrations in the primary coolant were below specified levels. These impurities can consist of dissolved and undissolved corrosion products and residual impurities in the makeup water. Gases (argon, xenon, krypton and helium) were not removed by the PP system.

Secondary functions of the PP system include the following:

- Supply makeup water to the buffer seal system;
- Remove decay heat during reactor shutdown; and,
- Decontaminate the primary coolant if a fuel rod should fail.

9.2.1.2 Description

The PP system consisted of four letdown coolers - three demineralizers; two filters; and associated instrumentation, controls, valves and piping.

The four letdown coolers (PP-C1, PP-C2, PP-C3 and PP-C4) are identical shell and tube heat exchangers arranged in two parallel loops, each loop containing two letdown coolers in series. Cooling water for the letdown coolers was supplied by the intermediate cooling water system. Isolation valves (PP-1V, PP-2V, PP-3V and PP-4V) are located upstream and downstream of each pair of coolers and were operated by pushbuttons from the main control room. The valve arrangement permitted operation with either pair of coolers.

The carbon steel shell of each cooler is about 30 inches in diameter and about 21 inches long. The tube side, in which primary water circulates, was designed for 2000 psig and 650°F. The shell of each cooler was designed for 150 psig and 225°F. The coolers are located inside the containment vessel.

During normal reactor operation, primary water at approximately 521°F and 1750 psia was drawn from the reactor outlet line of the port primary coolant loop. This water flowed through the letdown coolers and the normal flow control valves (PP-7V or PP-8V) to reduce the temperature and pressure to about 110°F and 50 psig.

The flow control network, located downstream of the letdown coolers and inside the containment vessel, consists of the two normal flow control valves PP-7V and PP-8V) and a bypass control valve (PP-6V). Valves PP-7V and PP-8V are diaphragm operated angle valves and were used to control the system flow when the primary system pressure was above 500 psig. At primary system pressure less than 500 psig, the bypass control valve (PP-6V), a diaphragm operated, straight-through valve, provided flow.

Downstream of the flow control valves, the PP system piping penetrates the containment vessel bulkhead and enters the lower reactor compartment. A diaphragm operated valve (PP-57V) was located in this line immediately outside the containment vessel. This valve was operated by the containment isolation system. A flow measurement nozzle is located in the line downstream of valve PP-57V. A pressure detector (PIA/PP-6) and two temperature detectors (TICA/PP-4) are located in the same general area as the flow nozzle.

The mixed-bed demineralizers (PP-E1, PP-E2 and PP-E3) were in the forward area of the lower reactor compartment. They were removed in March 1976. Each unit was capable of handling a flow up to 30 gpm; therefore, with a normal system flow of 20 gpm, only one demineralizer was in operation. Flows above 30 gpm required two units. The demineralizers were upright cylindrical tanks, 30-inch ID and 5-foot high, with hemispherical heads. Each demineralizer was surrounded with 4½ inches of lead shielding. Venting and draining operations associated with demineralizer units were made with a vent line connected to the gas manifold in the gaseous waste disposal (WL) system and with a drain line connected to the equipment drain and waste collection (PD) system. Remotely operated isolation valves (PP-11V, PP-12V, PP-13V, PP-26V, PP-27V and PP-28V) are located on the upstream and downstream sides of each demineralizer. These valves were operated by pushbuttons from the main control room.

The effluent filters (PP-E4 and PP-E5) are located at the outlet of the demineralizers in the forward port area of the lower reactor compartment. These units are identical in design and were capable of removing resin fines and insoluble impurities from the demineralizer effluent. Each unit was capable of handling flows up to 30 gpm; therefore, at the normal flow of 20 gpm, only one unit was used. Each filter is about 12 inches in diameter and 32 inches long and is

surrounded with 2 inches of lead shielding. The demineralizer effluent entered the filter through a side connection near the bottom, flowed upward through the filter elements and out through a side connection near the top. The filter elements consist of three hollow cartridges of sintered stainless steel. The mean pore opening in the cartridges was 10 microns. A bolted cover plate was located on the top of the unit so that the entire filter assembly can be removed. Isolation valves (PP-30V, PP-31V, PP-37V and PP-38V) are located on each side of the filters. No documentation indicates that the filter assemblies have been removed following permanent defueling.

A high differential pressure across the filters indicated that backflushing was required to remove the filtered material. Flush water was supplied from the combined condensate pump discharge in the engine room. The water first passes through a rotameter (PP-F18) in the engine room and then through individual backflushing lines for each unit. Manual valves (PP-49V and PP-50V) on the backflush lines connect to the normal outlet nozzle at the top of the filter. About 30 gpm of flush water flows counter to the normal flow path. The flush water leaves the filter through a drain connected to the laboratory waste tank.

The PP system water flows into the top of the buffer seal surge tank (SL-T1) after leaving the effluent filters. This line contains a flow nozzle from which flow was measured by means of a differential pressure cell (FI/PP-10). The detected flow was indicated in the main control room.

When fresh makeup water was required for the buffer seal surge tank, it was added by the PP system upstream of the demineralizers. Makeup water was normally supplied from the outlet of the combined condensate polishing demineralizer in the secondary system. When additions were made, manual control valves (PP-73V and PP-74V) and a local flow indicator, located near the polishing demineralizer on the lower level of the engine room, were used for makeup flow control.

A second source of makeup water was the primary system water stored in the makeup storage tanks (PD-T2 and PD-T3). During primary system heatup as dense cold water expanded, it was stored in PD-T2 and PD-T3 for use during subsequent cooldown of the primary system. The primary makeup pump (PD-P2) was used to add the makeup water to the upstream side of the demineralizers. A flow nozzle was located in the makeup line.

Three sets of relief valves were provided to prevent excessive pressures in the PP system. A relief valve (PR-4V), set at 150 psig, is connected to the main piping downstream of the flow control valves and discharged to effluent condensing tank (PR-T1). Each demineralizer had a relief valve (PP-63V, PP-64V or PP-65V), set at 60 psig, on the outlet line. The three valves discharged into a common header which was routed to the backflush outlet nozzle for effluent filter (PP-E5). Each effluent filter has a relief valve (PP-62V or PP-61V), set at 60 psig, which discharged to the buffer seal surge tank.

The PP system supplied water for the two sampling system loops. The supply line for one loop was connected to the piping between the letdown coolers and the flow control valves. The return line for this loop was connected to the main purification piping between the flow control valves and the demineralizers. The supply line for the second sample loop was connected to the main line between the demineralizers and effluent filters; the return water for the second loop flows into the buffer seal surge tank.

The pressurizer could be vented to the PP system through a 1-inch line (WL-2) which was connected to the PP system piping between the letdown coolers and the flow control valve network. A diaphragm operated valve (WL-1V) was used for the venting operation.

9.2.2 Buffer Seal (SL) System

9.2.2.1 Function

All of the buffer seal (SL) system equipment is deactivated, disabled, drained and performs no active function.

The principal function of the SL system was to supply purified high pressure water to the control rod drive buffer seals. The high pressure water maintained a seal at penetrations in the reactor head thus preventing primary water leakage. The secondary functions of the SL system included the following:

- Supplying high purity makeup water from the PP system via the buffer seal surge tank (SL-T1) to the primary system;
- Providing water circulation through the reactor and purification system when the letdown coolers were used to remove reactor decay heat;
- Maintaining dissolved hydrogen in the primary water;
- Cooling the CRD extension shafts at the RPV head; and,
- Removing expansion water from the primary system during reactor heatup.

9.2.2.2 Description

The SL system consists of the buffer seal surge tank, two booster pumps, three charge pumps with desurgers, two buffer seal coolers and associated valves and piping.

The buffer seal surge tank (SL-T1) was the collection point for the water flowing into the SL system from the primary loop purification (PP) system, for water returning from the control rod buffer seals and for the bypass flow around the buffer seals. This is a stainless steel vertical cylindrical tank designed for 186 psig. The tank is 13½ feet tall, 4 feet ID and has a volume of 87 cubic feet. The tank was operated with a hydrogen overpressure of about 30 psig. The gas stripping column, mounted on top of the buffer seal surge tank, is filled with polyethylene packing. As the water flowed down the column, the water was saturated with hydrogen.

The buffer seal surge tank is located in the port forward area of the lower reactor compartment. The main outlet is routed through the secondary shield to the suction of the two buffer seal booster pumps (SL-P4 and SL-P5), which are mounted on the forward bulkhead of the port stabilizer room. Another line, connected to the tank outlet and containing a diaphragm operated valve (PD-32V), was used to drain excess water to the makeup storage tanks (PD-T2 and PD-T3) in the equipment drain and waste collection (PD) system. The valve was operated from the main control room. The draining operations were normally performed during heatup of the primary system to remove the excess expansion water.

The inlet to the buffer seal surge tank from the buffer seal coolers contains a check valve which prohibited flow out of the surge tank in the event of a failure in the buffer seal coolers or buffer seal charge pumps.

The buffer seal surge tank could be vented to a gas manifold in the gaseous waste disposal and collection (WL) system by means of a diaphragm operated valve (WL-34V). This valve was actuated by a switch located on the instrument panel at the sampling station in the Cold Water Chemistry Lab. The tank has a relief valve (SL-10V) to prevent excessive pressures.

Pressure, temperature and water level instrumentation were provided for the tank. The water level was detected by two differential pressure cells (LIA-SL5) connected to separate standpipes. The temperature of the water in the surge tank was detected with a sealed gas-filled

system (TIA/SL-6) consisting of a temperature bulb connected by capillary tubing to a bourdon tube. The detector is located in an enclosed thermowell in the tank wall. The pressure (normally 30 psig) in the gas space of the tank was detected with a bourdon tube instrument (PIA/SL-7).

Because of the long lengths of the piping between the buffer seal surge tank and the buffer seal charge pumps (SL-P1, SL-P2 and SL-P3), two booster pumps were provided to assure that the charge pumps have a sufficient net positive suction head. The booster pumps (SL-P4 and SL-P5) are vertically mounted centrifugal pumps that were piped in parallel (one pump on standby). The pump volute, impeller and shaft are made of stainless steel. The pump shaft has a mechanical seal which prevented water from leaking to the atmosphere. Drain lines are provided for the pump casing and seal. Drainage was routed to the drain well located in the forward area of the lower reactor compartment. Manual isolation valves (SL-37V, SL-38V, SL-40V and SL-42V) are located on each side of the pumps and check valves (SL-39V and SL-41V) are located in the discharge lines. A pressure relief valve (SL-68V), set at 150 psig, is connected in parallel with the pumps. The booster pumps were normally operated from the main control room but they could also be operated from local switches in the port stabilizer room.

The discharge pressure of the booster pumps was indicated in the main control room. This signal (PIA/SL-3) was used to indicate pump discharge pressure and to actuate a low header pressure alarm on the annunciator panel.

The booster pump discharge piping (charge pump suction piping) is routed along the port side of the ship and along the cross flooding passage to the three charge pumps. The charge pumps are located in two small outboard compartments forward of and accessible from the engine room on the lower level.

The starboard room contains charge pump SL-P1, while the port room contains charge pumps SL-P2 and SL-P3. The access openings to these rooms were located in the engine room bulkheads. The main functions of the charge pumps were to deliver the required flow to the control rod buffer seals and to supply primary system makeup water. The charge pump was a vertical triplex, single acting pump i.e., reciprocating type with three plungers. The pump was driven by a two speed gear motor through a flexible coupling mounted on a horizontal structural steel frame. The pump delivered 70 gpm at full speed and 35 gpm at half speed. The motor had a rating of 100 hp at full speed and 50 hp at half speed. The pump was capable of delivering discharge pressures up to 2050 psig at both speeds. The seals on the plunger shafts are arranged so that any water that leaked past the seals was collected in a header that drained to a 22-gallon collection tank. As noted in 7.1.2.2, Leakage From Primary System, initially up to 1200 gpd of primary water was lost due from the buffer seal (SL) system reciprocating charge pumps and from the diaphragm-operated relief valves of the primary relief (PR) system. As a result of improvements, leakage was reduced from to 50-100 gpd.

The pumps are piped in parallel with manual isolation valves (SL-1V, SL-2V, SL-3V, SL-46V, SL-48V and SL-50V) located on each side of the pumps. Check valves (SL-4V, SL-47V and SL-49V) are also located in the discharge piping of the pumps. Relief valves (SL-43V, SL-44V and SL-45V), set at 2250 psig, are connected between the discharge and suction of each pump to prevent excessive pressures if the discharge flow was isolated while the pump was operating.

Reciprocating pumps have pressure pulsations which can be as high as ±30 to 40% of the discharge pressure. Consequently, an electrically heated desurger (SL-T2, SL-T3 or SL-T4) is connected to the discharge of each charge pump to reduce the pressure pulsations to ±2% of the

pump discharge pressure. The desurgers are 3-foot sections of 4-inch stainless steel pipe wrapped with two sets of 1.225 kW wrap-around heaters. The heaters were used to form and maintain steam in the desurgers.

The three reciprocating charge pumps increased the water pressure to about 50 psi above that of the primary system. The water was distributed to the following:

- Twenty-one control rod drive buffer seals;
- Makeup lines to the primary system; and,
- Bypass control line.

The discharge piping for a charge pump SL-P1 in the starboard pump room is routed along the cross flooding passage inside of the secondary concrete shield and joins with the discharge header for pumps SL-P2 and SL-P3 at a point just forward of the port pump room. The common line then returns to the port stabilizer room where two strainers (SL-F9 and SL-F10) are located in the line.

Two bourdon tube type pressure detectors were located directly downstream of the strainers to monitor the pressure of the control rod seal header.

Immediately downstream of the pressure detector, flow was routed to the control rod buffer seal supply header, the buffer seal header bypass line and the primary system makeup lines through valves SL-121V and SL-6V. The supply line for the control rod buffer seals is routed through the secondary concrete shield and the containment vessel bulkhead to a circular header surrounding the control rod drive structure. A manual isolation valve (SL-11V) is located just outside the reactor compartment in the port stabilizer room. Check valves (SL-87V, inside the reactor compartment and SL-5V inside the containment vessel) prevented reactor water from leaking outward through the seals.

A flow nozzle (FIA/SL-9) is located upstream of the manual isolation valve (SL-11V).

From the circular buffer seal supply header, the flow was directed to the 21 control rod seals. At the seals, part of the flow leaked into the reactor vessel and the remainder leaks outward to a leak-off connection. The total inward leakage at the seals and the total return flow were each about 10 gpm. The outward leakage from each seal was collected in the outlet header and then was returned to the buffer seal surge tank by way of the buffer seal coolers (SL-C1 and SL-C2).

Since the 20 gpm flow through the purification system was in excess of the 10 gpm inflow to the reactor through the control rod buffer seals, it was necessary to supply remaining 10gpm flow as makeup water directly to the primary system. Makeup was supplied from a point located downstream of strainers SL-F9 and SL-F10. Two arrangements were provided for adding the makeup. The normal makeup point is the outlet plenum of the steam generators (boilers). The auxiliary makeup point is the reactor inlet of the primary system starboard loop.

Makeup water flow to the outlet plenum of the steam generators was controlled by diaphragm operated valve SL-121V. Downstream of valve SL-121V, the makeup line branches into two lines. Both lines penetrate the secondary shield and the containment vessel bulkhead. One line is connected to the port steam generator outlet plenum while the other line is connected to the starboard steam generator outlet plenum.

The auxiliary method of adding makeup was by diaphragm operated valve SL-6V. This is connected to the body of valve PS-6V which is located on the reactor inlet line for the starboard primary loop. Valve SL-6V was controlled from the main control room.

Since the constant volume flow from the buffer charge seal pumps was in excess of the flow supplied to the seals and to the primary system as makeup, the excess flow was returned to the buffer seal surge tank through bypass control valve (SL-9V). Valve SL-9V was designed to control the bypass flow when the primary system was at normal operating pressure. During low pressure operation, a manual control valve (SL-60V), connected in parallel with valve SL-9V, was used to help control the flow.

Inside the lower reactor compartment, the buffer seal outlet line contains a diaphragm operated valve (SL-8V). It was operated by the differential pressure controller (PICA/SL-1) which regulates bypass control valve SL-9V. If the differential pressure between the buffer seal supply header and the primary system became low, valve SL-8V automatically closed to prevent primary system water from leaking out through the seals.

A flow nozzle (PIA/SL-4) is located on the buffer seal water return line in the port stabilizer room and allowed monitoring of the total buffer seal return flow.

In the port stabilizer room, the bypass flow and the seal return flow join and flow to the buffer seal coolers (SL-C1 and SL-C2). The common line contains a flow nozzle which was used to monitor the total return flow to the buffer seal surge tank.

The buffer seal coolers removed heat added to the buffer seal water by the buffer seal charge pumps. The coolers are shell and tube heat exchangers. Buffer seal water flowed through the tube side fluid and cooling water from the intermediate cooling system flowed through the shell side. The tubes are made of stainless steel and the shell is made of carbon steel.

A relief valve (SL-61V), set at 100 psig, is connected across the primary side of the coolers. This valve was provided to relieve excessive pressures if the isolation valves (SL-33V, SL-34V, SL-35V and SL-36V) on the buffer seal coolers were closed when the flow path from the control rod buffer seals or the bypass line was still open.

9.2.3 Hydrogen Addition (HA) System

9.2.3.1 Function

All of the hydrogen addition system (HA) equipment is deactivated, disabled, drained and performs no active function.

The HA system provided a hydrogen gas blanket on the water in the buffer seal surge tank. This gas blanket maintained a hydrogen concentration in the primary system water of 20 to 40 cc per liter at standard temperature and pressure (STP). The dissolved hydrogen combined with the oxygen resulting from radiolytic decomposition. Maintaining a low oxygen content in the primary water reduced the corrosion rate of the primary system materials to a minimum. Hydrogen was added to the buffer seal surge tank.

9.2.3.2 Description

The HA system consists of standard 200 standard cubic feet (SCF) hydrogen cylinders, pressure regulators, valves, piping and instrumentation.

The hydrogen cylinders (HA-T1, HA-T2 and HA-T3) and regulators (HA-F1 and HA-F2) are located in a special vented locker on the forward weather deck. The hydrogen was introduced into buffer seal surge tank (SL-T1) by manual operation of the HA system. Distribution nozzles located below normal water level in the tank disperse the hydrogen in the water. A gas stripping column located on top of the tank helped dissolve hydrogen into the water entering the tank from the PP system. The hydrogen pressure in the buffer seal surge tank was maintained

by two gas pressure regulators, which were normally operated manually but were also equipped for automatic operation.

A relief valve (HA-10V), set at 60 psig, was provided to relieve the pressure in the hydrogen charge line if the pressure regulator fails. Additionally, the two check valves (HA-18V and HA-19V), connected in series downstream of the regulators, acted as a flame arrestor.

A solenoid valve (HA-21V) downstream of the relief valve would have isolated the hydrogen manifold when the hydrogen supply line was accidentally severed. The solenoid valve was operated by a pressure switch (HA-10) located downstream. This switch was set to actuate when the pressure drops to 2 psig. The line from the hydrogen addition locker to the buffer seal surge tank is enclosed by a specially vented outer pipe which further minimizes any hazards associated with hydrogen.

9.2.4 Primary Relief (PR) System

9.2.4.1 Function

All of the primary relief (PR) system equipment is deactivated, disabled, drained and performs no active function.

The PR system prevented pressures in the primary system, steam generators and primary loop purification (PP) system from exceeding the design code allowable pressures. Additionally, the PR system provides a means of collecting and condensing effluent from the relief valves.

9.2.4.2 Description

The PR system consists of:

- Safety and relief valves located on the steam generators (PR-12V, PR-14V, PR-16V and PR-17V), the pressurizer (PR-1V, PR-3V, or PR-24V), the PP system letdown piping (PR-4V) and the effluent condensing tank (PR-T1).
- Heat exchangers (PR-C1 and PR-C2) to cool pressurizer steam which may have been leaking through the safety valves.
- An effluent condensing tank (PR-T1), partially filled with water, to receive and condense the discharge from the pressurizer safety valves or to receive the discharge from the PP system relief valve.

The pilot operated relief valve (PR-3V) and the two safety valves (PR-1V & PR-24V) for the pressurizer are discussed in Chapter 7. A low pressure rupture disc (PR-F11), set to relieve at 113 psig, is located on the main discharge line of the pressurizer safety valves downstream of the junction of the diaphragm valve and the spring-loaded valve lines. Two small heat exchangers, connected in parallel, are located on bypass lines around the rupture disc in the main discharge line. The heat exchangers cool steam that intermittently leaked through the safety valves. Cooling water for the heat exchangers was supplied from the intermediate cooling water (CW) system.

If a safety valve opened, the rupture disc would have burst to relieve fluid into the effluent condensing tank. A check valve (PR-6V) prevented backflow from the effluent condensing tank to the relief valves.

The effluent condensing tank is a horizontal cylindrical tank with elliptical heads. The overall dimensions are 6 feet 8 inches long by 4 feet in diameter. It is constructed of carbon steel and the inside was lined with a baked phenolic resin coating to retard corrosion. The tank pressure was relieved to the containment by a spring-loaded, self-actuated safety valve (PR-7V) set at 50

psig. The water level in the effluent condensing tank was maintained by draining excess water or by adding makeup water. Excess water was drained to the lab waste tank (PD-T1) through a diaphragm operated valve (PD-39V) which was operated at the sampling room instrument panel (forward of the reactor compartment on D-deck level). The drain line is located on the side of the effluent condensing tank at the same elevation as the normal water level such that the water could not be drained below this point. Makeup water for the effluent condensing tank was supplied from the CW system through a manual valve (CW-4V) located in the engine room. A tank level indicator is located near the valve so that the level could be monitored while the additions were being made. Gases in the effluent condensing tank were vented to the gaseous waste disposal and collection (WL) system through a diaphragm operated valve (PR-9V) located at the top of the tank.

Pressure, level and temperature instrumentation of the effluent condensing tank was indicated in the main control room. Pressure was detected with a bourdon tube pressure gage (PIA/PR-l). The temperature was sensed with a resistance temperature element (TIA/PR-3) enclosed in a thermowell. The tank level was measured with a differential pressure cell (LIA/PR-2) connected to a stand-pipe on the tank. The tank level was also displayed on instrument (LI/PR-2) near the makeup valve (CW-4V) in the engine room.

The two safety valves on each steam generator drum in the secondary system were set to relieve at 800 psig, the design pressure of the drums. Low pressure rupture discs (PR-F4, PR-F6, PR-F7 and PR-F9), set to relieve at 16 psig, are installed at the end of the discharge piping. The rupture discs prevented intermittent steam leakage into the containment vessel. A small drain pipe, located between each safety valve and its rupture disc, conveys valve leakage to the containment drain tank (PD-T4). Each drain line contains a ball check valve (PR-l8V, PR-20V, PR21V, or PR-23V) to prevent the loss of both rupture discs if only one of the two relief valves on a steam generator drum opens.

A relief valve is located on the PP system just downstream of the flow control valves. The relief valve prevented excessive pressures in the low pressure piping and equipment (186 psig design) of the purification system. The relief valve was set to open at 150 psig and has a capacity of 75 gpm of water. The effluent is piped to the effluent condensing tank because the water was potentially radioactive. A check valve (PR-5V) prevented backflow from the tank to the relief valve.

9.2.5 Primary Sampling (SA) System

9.2.5.1 Function

All of the primary sampling (SA) system equipment is deactivated, disabled, drained and performs no active function.

The SA system had the following general functions:

- To supply representative primary water samples for analysis.
- To supply representative samples for analysis of dissolved hydrogen and other dissolved gases in the primary water.
- To provide a means of continuously monitoring the effectiveness of the primary loop purification (PP) system demineralizers.
- To supply liquid samples of the drainage collected in the lab waste tank, the makeup storage tanks and the inner bottom tanks for analysis.

9.2.5.2 Description

The SA system consists of the following:

- A loop in which water was taken from and returned to the PP system at points upstream of the demineralizers.
- A loop in which water was taken from a point downstream of the PP system demineralizers and returned to the buffer seal surge tank.

The second loop was also used to sample the lab waste tank (PD-T1), the inner bottom tanks (PD-T5 and PD-T6) and to provide samples for analyses of dissolved gases in the primary water. A third arrangement was provided for sampling the makeup storage tanks (PD-T2 and PD-T3).

Located in the Cold Water Chemistry Lab forward of the CV, the sampling hood is a combined hood and sink, which form a unit about 8 feet high, 5 feet wide and 3 feet deep. The opening in the hood was normally covered with a sliding glass panel. A faucet from the ship's fresh water supply is provided to wash the sink after spillage of sample water. The sink drains to inner bottom tank (PD-T6). The hood was vented through a flame arrestor (WL-F3) to the suction of the RSV system fans (RS-P1 and RS-P2).

The first sampling loop is connected to the PP system downstream of the letdown coolers. Block orifices (SA-F3 and SA-F10) regulated the flow and pressure in the sampling loop. Diaphragm operated stop valves (SA-1V and SA-4V), located upstream and downstream of the orifices, isolate the sampling loop.

A relief valve (SA-17V), set at 100 psig, is located on the loop line between valve SA-1V and the containment penetration. The relief valve was provided to protect the low pressure piping located downstream of valve SA-1V and discharged to the containment drain tank (PD-T4).

A pressure switch (PA/SA-1) is connected to the sampling line just outside of the containment. This switch actuated an annunciator in the main control room. A diaphragm operated valve (SA-45V), located downstream of the pressure switch, isolated the loop if a pressure increase occurs inside the containment vessel. The loop is then routed through the secondary shield to the sampling room which is located forward of the reactor compartment at the D-deck level (frame 99 - 102).

In the sampling room, a conductivity cell (CIRA/SA-6) and a pH cell (pHI/SA-8) are connected to the loop. They monitored the water quality of the purification demineralizer influent which was essentially the same as the primary system water quality. The conductivity cell consists of a measuring electrode, a reference electrode and a temperature compensator. The conductivity and pH measurements were displayed on the sampling room instrument panel and in the main control room. A high conductivity alarmed in the main control room.

Flow through the sampling loop was controlled by a manual control valve (SA-3V) located outside the sampling hood. The flow was measured by a direct indicating rotameter (SA-4). Samples could be taken from this loop either in a sample bomb or from a faucet (SA-108V). The sample bomb is located in a bypass line around flow control valve (SA-3V). The sampling bomb bypass line contains a rotameter (SA-2), double isolation valves (SA-8V, SA-9V, SA-25V and SA-27V) and disconnect joints (SA-5 and SA-6) to permit sampling at the sample loop pressure.

The second sampling loop was similar in arrangement to the first loop. It is connected to the PP system downstream of demineralizers. A diaphragm operated isolation valve (SA-19V) is

located near the PP system connection and was actuated by pushbuttons on the sampling room instrument panel. The loop contains a conductivity cell (CIRA/SA-7), which monitored the water quality of the demineralizer effluent. The water could flow through the sampling bomb line inside the hood or through the bypass line. Flow through the loop was controlled by a manual control valve (SA-15V) located outside the hood. Rotameter (SA-3 and SA-5), downstream of the sampling bomb and bypass line, were used to adjust the loop flow. The normal flow was about 1 gpm. The water was returned to the buffer seal surge tank. A diaphragm operated valve (SA-32V), actuated with the same pushbuttons as used for valve SA-l9V, is located near the connection to the surge tank.

Samples for dissolved hydrogen and total gas analysis were taken upstream of the sample bomb. A water faucet is also located upstream of the sample bomb so that bottle samples could be taken. Locally indicating bourdon tube type pressure gages (PI/SA-10 and PI/SA-12) are located on each side of the sampling bomb. A pressure indicator (PI/SL-7) for the buffer seal surge tank (SL-T1) is also located inside the hood so that the tank pressure could be monitored while samples were taken.

The second sample loop was arranged so that it could be used to sample the lab waste tank (PD-T1) and the inner bottom tanks (PD-P5 and PD-T6) in the PD system. To perform this function, a supply line is connected between the discharge header for the waste transfer pump (PD-P1) and the upstream side of the sampling bomb. A return line is located between the downstream of the bomb and the suction header for pump PD-P1. Diaphragm operated isolation valves are located on the supply line (SA-24V) and in the return line (SA-29V). Both valves were actuated with the same set of pushbuttons on the sampling room instrument panel. The pushbuttons for valves SA-19V and SA-32V (PP system) and the pushbuttons for valves SA-24V and SA-29V have an electrical interlock arrangement so that one set of valves could not be opened when the other set of valves were open. This minimized the possibility of contaminating PP system primary water with water from the waste storage tanks.

The manual valving for the lab waste tank and the inner bottom tanks is arranged so that the inlet and outlet lines could have been connected to pump PD-P1 to circulate a representative sample through the sample bomb for subsequent analyses. The valves have reach rods which were operated in the sampling room.

Makeup storage tanks (PD-T2 and PD-T3) could be sampled with the same arrangement provided for tanks PD-T1, PD-T5 and PD-T6; however, a direct line runs from the primary makeup pump (PD-P2) discharge line to a water faucet in the sampling hood. This line was used to sample the primary system expansion water that was stored in PD-T2 and PD-T3.

9.2.6 Intermediate Cooling Water (CW) System

9.2.6.1 Function

All of the intermediate cooling water (CW) system equipment is deactivated, disabled, drained and performs no active function.

The CW system cooled various components in the reactor plant while maintaining an intermediate barrier between primary water and sea water. This minimized the possibility of releasing radioactive fluid directly to the sea and minimized the possibility of water containing chlorides contacting equipment constructed of stainless steel.

9.2.6.2 Description

The CW system has two separate flow circuits, one for sea water and one for fresh water. The sea water circuit is composed of two pumps (CW-P1 and CW-P2), two main intermediate coolers (CW-C1 and CW-C2), a suction sea chest, an overboard discharge, manual valves and piping. The two pumps are arranged in parallel with one as standby. The coolers are connected in parallel so that either pump can deliver sea water to either cooler. The sea water pumps took suction from the sea chest and pumped the sea water to the tube side of the intermediate coolers. Heat was removed from the fresh water circulating through the shell side. The heated sea water was then discharged through the overboard discharge. The intake for the pumps is also connected to the suction sea chest for the salt water service system. This sea chest can be used if the normal sea chest was clogged or out of service. An auxiliary overboard discharge is also provided. Additionally, the salt water circuit normally supplies cooling water for reactor compartment ventilation system cooling coils (RS-C1 and RS-C2). The line is connected to the discharge of the sea water pumps.

The sea water pumps, located at the forward end of the engine room on the lower level, are vertically mounted centrifugal pumps of bronze construction. They had a design rating of 1491 gpm with a suction head of 4 to 9 psig and a total developed head of 20 psi. The motor was rated at 25 horsepower.

The fresh water circuit is a closed loop consisting of two circulating pumps (CW-P3 and CW-P4), two main intermediate coolers (CW-C1 and CW-C2), a surge tank (CW-T1), manual valves, a strainer (CW-F26), control valves, relief valves, instrumentation and piping. The pumps circulated fresh water through the shell side of the intermediate coolers to a supply header. Fresh water flowed and cooled the following:

- Components inside the Containment Vessel;
- Purification letdown coolers (PP-C1, PP-C2, PP-C3 and PP-C4);
- Primary (neutron) shield tank cooling coils (CW-F12 and CW-F13);
- Primary relief valve leak off condensers (PR-C1 and PR-C2);
- Containment air cooling coils (CC-C1 and CC-C2);
- Primary pumps (PS-P1, PS-P2, PS-P3 and PS-P4);
- Components outside the Containment Vessel;
- Buffer seal coolers (SL-C1 and SL-C2);
- Control rod drive hydraulic power supply coolers 1 and 2;
- Instrument air compressors (NI-P1 and NI-P2) and associated after coolers;
- Quantichem analyzer coolers; and,
- Feedwater sample cooler.

The water from these components collected in a return header and then completed the cycle by flowing through a common line to the suction of the fresh water circulating pumps. The fresh water pumps (CW-P3 and CW-P4) are arranged in parallel with one acting as a standby. They are vertically mounted centrifugal pumps made of bronze. The design flow rate for each pump was 675 gpm with a suction head of 15 psig and with a total developed head of 65 psi. The fresh water pumps are located at the forward end of the engine room on the lower level.

Downstream of the fresh water pumps, the intermediate coolers (CW-C1 and CW-C2) are arranged in parallel so that either pump could be used with either cooler. The coolers were single-pass, straight, shell-and-tube heat exchangers with salt water flowing through the tubes and fresh water flowing through the shell side. The tubes, associated tube sheet liners and inlet

and outlet plenums, are 70-30 copper nickel; the shell is carbon steel. The design heat load was based on fresh water entering at 143°F and leaving at 95°F while the sea water was heated from 85°F to 106°F. The coolers are mounted on the forward bulkhead of the engine room near the lower level. Each cooler is about 19½ feet long by 20 inches in diameter.

The following components are located in the common outlet line for the coolers:

- Strainer (CW-F26);
- Diaphragm-operated valve (CW-29V);
- Pressure detector for instrument (PICA/CW-7);
- Temperature detector for instrument (TIA/CW-5); and,
- Flow nozzle for instrument (FI/CW-6).

The strainer is a duplex unit, which filtered suspended matter from the fresh water coolant stream. One strainer was normally in operation. If the operating strainer became clogged, a built-in switching arrangement was used to change to the other strainer. The clogged strainer could be removed for subsequent cleaning.

From the flow nozzle, the fresh water entered the supply header to the components being cooled. Each set of purification letdown coolers has an individual supply line from the header in the engine room to the units inside the containment vessel. A manual isolation valve is located in each supply line in the engine room. A check valve is located in each supply line inside the lower reactor compartment to prevent backflow. The fresh water flowed in parallel through the two coolers in each set. The flow in the coolers was on the shell side. The cooling water leaving each set of coolers was collected in one return line. Each pair of coolers has a relief valve set at 150 psig (valve CW-93V and CW-92V). These relief valves are located on the return line for each pair of coolers. The relief valves prevented excessive pressures in the lines and in the shell side of the coolers in the event a tube should leak or rupture. The relief valves discharged to the containment. Inside the lower reactor compartment, the two return lines contain stop check valves and diaphragm-operated valves (CW-201V and CW-202V), which were actuated by the containment isolation system. Downstream of the stop check valves, the two return lines connect into a common line, which is routed to the main return header in the engine room. On the return line in the engine room, a diaphragm-operated valve (CW-39V) controlled the cooling water flow through the operating set of coolers. This valve was automatically controlled by a temperature monitor (TICA-PP4) of the primary water leaving the coolers. Valve CW-39V could also be controlled by remote manual means with a manual loader from the main control room. A bypass line containing a manual valve (CW-140V) is provided around valve CW-39V for controlling the cooling in the event valve CW-39V was inoperative.

Individual supply lines are provided for cooling the primary (neutron) shield tank cooling coils, which are located in the primary (neutron) shield tank surrounding the reactor vessel. Each supply line contains a manual isolation valve near the supply header in the engine room. A check valve is located in each line inside the lower reactor compartment to prevent backflow. Relief valves (CW-196V and CW-194V), set at 150 psig, are located on the supply lines to prevent overpressure in the event the temperature of the water in an isolated circuit should increase and cause the water to expand. Inside the lower reactor compartment, the individual return lines contain stop check valves. The return lines join a common line, which is routed to the return header in the engine room. Inside the lower reactor compartment, a diaphragm-operated valve (CW-203V) is operated by the containment isolation system. Near the return

header in the engine room, the return line contains a manual isolation valve and a manual control valve.

The cooling water lines for primary relief valve leak off condensers (PR-C1 and PR-C2) are connected to the return line for primary (neutron) shield tank cooling coil (CW-F12). The return line for the primary (neutron) shield tank coil contains a manual valve (CW-217V), which is normally closed so that all of the flow through the coil was through the leak off condensers. The condensers have isolation valves on the inlet and outlet lines.

Individual supply lines and return lines are provided for containment air cooling coils (CC-C1 and CC-C2). A manual isolation valve is provided for each supply and return line in the engine room near the headers. Inside the lower reactor compartment, a check valve is located on each supply line to prevent backflow. Relief valves (CW-190V and CW-192V) were set at 150 psig and were located inside the containment vessel. These relief valves were provided on the supply lines to prevent overpressures in the event the temperature in an isolated circuit should increase and cause the water to expand.

The return lines from the containment cooling coils have diaphragm-operated valves (CW-205V and CW-206V), which were operated by the containment isolation system if a pressure buildup occurred in the containment vessel. Flow through the coils was controlled with manual valves on the return lines in the engine room. The performance of the coils was monitored with containment air temperature instrumentation in the containment cooling (CC) system. Normally, both cooling coils were in operation.

The CW system water removed the heat from the motors and the bearings of the primary pumps. The cooling water flowed through a jacket surrounding the motor section of the pump and primary water in the pump motor cavity flows through a coil in this jacket. Each pump had a separate supply and return line connected to the main headers. A manual isolation valve is located on each supply and return line near the headers in the engine room. A manual control valve is also located on each return line in the engine room. Supply lines contain check valves inside the lower reactor compartment to prevent backflow. Relief valves (CW-50V, CW-54V, CW-58V and CW-64V) are located on the supply lines. These relief valves are near the pumps inside the containment and were set for 150 psig. These valves prevented excessive pressure in the cooling lines and pump cooling jacket if the primary water coil in the jacket should rupture and cause primary water to leak into the CW system water. These relief valves discharged to the containment vessel. Each return line from the primary pumps contains a diaphragm-operated isolation valve (CW-207V, CW-208V, CW-209V) or CW-210V) which was operated by the containment isolation system. Each return line also contains a flow orifice (FA-CW8, FA-CW9, FA-CW10, or FA-CW11). These isolation valves and flow orifices are located inside the lower reactor compartment.

Common supply and return lines are provided from the main headers in the engine room to the buffer seal coolers (SL-C1 and SL-C2) in the port stabilizer room. Manual isolation valves are provided on the upstream and downstream sides of each cooler. In the coolers, the cooling water flowed through the shell side while the primary or seal return water flowed through the tube side. A diaphragm-operated valve (CW-129V) on the return line from the buffer seal coolers was used to control the cooling water flow. This valve was controlled from the main control room. The performance of the coolers was monitored with instrument TIA/SL-11 in the SL system. A bypass line containing a manual valve CW-155V was located around valve CW-129V so that the cooling water flow can be adjusted manually if valve CW-129V was inoperative. Two relief valves (CW-233V and 234V) were set at 150 psig and are provided on

the cooling water outlet lines from the coolers to prevent excessive pressures. The relief valves discharge to the port stabilizer room.

Common supply and return lines are routed to the three hydraulic power supply coolers in the hydraulic equipment room located on the starboard side of the reactor compartment at B-deck level. These coolers were used to cool the hydraulic fluid associated with the operation of the control rod drives. Flow through each cooler was controlled by manual valves (CW-142V and CW-143V) located at the coolers. Relief valves (CW-235V and CW-236V), set at 150 psig, on the return cooling lines prevented excessive pressures in the coolers and associated piping.

The CW system water to the instrument air compressors and their after coolers was controlled by valve CW-240V, which maintained the pressure downstream at 45 psig.

Fresh water from the CW system was supplied to three coolers (QC-C1, QC-C2 and QC-C3) associated with the Quantichem analyzer, which monitored the cooled samples of water for chloride content. The feedwater sample cooler, which cooled samples of feedwater in the steam plant, was also supplied by the CW system. This equipment is located in the engine room.

In addition to its cooling functions, the fresh water supply header was used to supply fresh makeup to effluent condensing tank (PR-T1) and to the primary (neutron) shield tank surrounding the reactor vessel. Both tanks are located inside the containment. The additions to the effluent condensing tank were made with manual control valve (CW-4V) located on the makeup line in the engine room. Additions of water to the primary (neutron) shield tank were made with a manual control valve (CW-42V) on the makeup line in the engine room. Inside the lower reactor compartment, both makeup lines contain check valves to prevent backflow.

The cooling water collected in the main return header was routed to the suction side of the fresh water pumps (CW-P3 and CW-P4). A surge tank (CW-T1) is connected by a standpipe to the suction line for the pumps. This surge tank is located at B-deck level on the port side and aft end of the reactor compartment. The tank provided for thermal expansion and contraction of the fresh water in the closed loop. Its elevated position also provided a net positive suction pressure for the fresh water pumps. The tank has a volume of 26.7 cubic feet and is constructed of carbon steel. A gage glass, located on the side of the tank, was used to monitor the level locally. Two pressure switches (LA/CW-1) connected to the tank transmitted electrical signals to the main control room. Fresh makeup to the tank was provided by a manual makeup line or by an automatic float valve (CW-90V).

The makeup was normally supplied from the combined discharge of the condensate pumps in the condensate system. Control chemicals could be added through a funnel connected to the top of the tank. An auxiliary makeup line for the tank is connected to the discharge of the port feed pump. The makeup entered the tank through the chemical feed funnel. A vacuum breaker (CW-158V), set at 5 inches of mercury, prevented a vacuum in the tank. An overflow line connects to the top of the tank and drains to the bilge. A recirculation line is connected between the discharge of the fresh water pumps and the top of the tank. This arrangement permitted recirculating the tank contents if control chemicals were added.

9.2.7 Containment Cooling (CC) System

9.2.7.1 Function

All of the containment cooling (CC) water system equipment is deactivated, disabled, drained and performs no active function.

The CC system maintained the air in the containment vessel at proper conditions in order to prevent deterioration of electrical equipment and instrumentation. The system was also arranged to cool the containment vessel atmosphere in the event of a temperature and pressure increase following an MCA.

9.2.7.2 Description

The CC system was designed to maintain the air in the containment at an average temperature of 128°F and an average relative humidity of 58%. These averages were obtained with air in the upper part of the containment at 140°F and approximately 44% relative humidity and with air in the lower portion of the containment at 115°F and approximately 80% relative humidity.

The CC system consists of inlet and outlet air ducts and a main air-conditioning unit. The two main inlet air ducts in the upper part of the containment vessel extend in the fore and aft direction between the reactor vessel and the steam generators. Two branch inlet ducts also draw air from the dome section of the containment vessel, where the control rod drive structure was located. The grating, piping, valves, ducting, etc. that were disconnected while removing the main coolant pumps in 1971 were left in the removed condition within the containment vessel.

The air-conditioning unit is made up of a casing surrounding three air cooling coils (CC-C1, CC-C2 and DK-C2), one manually operated bypass damper (CC-F5), two circulating fans (CC-P1 and CC-P2), two outlet dampers (CC-F29 and CC-F30) and a mixing chamber. The unit is located at the aft end of the containment vessel. The two main outlet air ducts in the lower part of the containment vessel extend in the fore and aft direction on each side of the reactor vessel. A branch outlet duct is routed to the bottom of the pressurizer to cool the cables for the pressurizer heaters.

The fans (CC-P1 and CC-P2) pulled air into the inlet ducts from the top of the containment vessel and the cupola dome space. The inlet air flow was controlled by the air registers located in the main and branch ducts. The vanes on the registers were manually adjustable. The air was directed through the ducts down towards the main air-conditioning unit, where it passes over the coils and a small portion was bypassed. The air that was bypassed around the coils was mixed with the air leaving the coils in the mixing chamber before entering the fans. A manually adjustable damper controlled the bypass flow. The fans discharged the air into the outlet ducts at the bottom of the containment vessel. Air grills located along the outlet ducts and the branch duct distributed the air throughout the bottom of the containment vessel. The vanes on the grills were manually adjustable.

Two of the coils (CC-C1 and CC-C2) are in the CC system and the third coil (DK-C2) is in the emergency cooling (DK) system. The two containment cooling coils are fin tubes, constructed of 70-30 copper nickel. They were cooled with water from the intermediate cooling water (CW) system. Each coil was designed to handle the total heat design load of 477,000 Btu/hr. Normally, both coils were used. If one coil leaked, it could be isolated and the other coil would remove the total heat load from the air. The cooling water flow to the coils was controlled by manual valves (CW-152V and CW-153V) located in the engine room.

The DK system cooling coil was similar to the other two coils. It is constructed of 90-10 copper nickel and was cooled by sea water. This coil had a design heat load rating of 400,000 Btu/hr.

Directly below the cooling coils in the main unit is a set of V-type troughs. These troughs collected moisture condensed by the coils. The troughs drained to a catch pan, which in turn was drained to the containment drain tank (PD-T4).

The two fans in the air-conditioning unit have motors with two-speed windings. During normal plant operations, one of the fans was operated at the high speed. The half-speed feature was provided to permit operation of the fans in the dense atmosphere, with air pressure up to 60 psig, that existed during containment leak rate tests and higher pressures and temperatures that may follow an MCA. This arrangement for the cooling coils provided a means for reducing the pressure and temperature inside the containment after an accident. At full speed, the fans had a design rating of 11,000 cfm each and at half speed, the design rating was 5500 cfm each in a 100 psi steam atmosphere. Each motor had a design rating of 10 hp at full speed and 2.8 hp at half speed. The fans could be manually switched from off to low speed or high speed with pushbuttons from the main control room. Since the fans were operated during an emergency cooling situation, they could be operated in the same manner from the emergency cooling panel on the navigation deck.

A damper is located at the discharge of each fan. The air pressure developed by the operating fan closes the damper on the discharge of the idle fan. Lights were provided in the main control room to indicate the damper position.

Since there was the remote possibility that the two main outlet ducts might become flooded following an MCA, emergency vent openings were located in the main duct work just below the fans. The cover plates were held in place with 160°F fusible links.

Resistance temperature elements are located at five different places in the containment vessel as follows:

- Inside the outlet air duct (TI/CC-5);
- In the bottom of the containment vessel (TI/CC-4);
- In the upper portion of the containment vessel on the port side (TI/CC-3);
- In the upper portion of the containment vessel on the starboard side (TI/CC-2); and,
- In the cupola dome near the control rod drives (TIA/CC-1).

In addition, a resistance temperature element, which detects the wet bulb temperature, is located in the main outlet duct near the temperature element to measure the dry bulb temperature. All of the wet and dry bulb temperatures were transmitted to the main control room. The signal from the temperature element in the cupola was used for high-temperature alarm monitoring.

Two detectors are provided for detecting the pressure in the containment. One (PIA/CC-7) was used for low-range pressure measurements so that small changes in containment pressure can be monitored. The other one (PI/CC-6) was used for high-range pressure measurements up to the design pressure (186 psig) of the vessel. The low-range detector sensed the pressure (0 to 15 psig) with a bellows arrangement and the high-range detector sensed the pressure (0 to 200 psig) with a bourdon tube. Both detected pressures were transmitted to the main control room. Since there was a possibility that the bellows in the low-range instrument may rupture if there was a significant pressure buildup in the containment, a solenoid isolation valve was located in the detecting line to the bellows. The solenoid valve was actuated by a pressure switch connected to the solenoid valve and the valve closes to isolate the line when the containment pressure increased to 14 psig.

Three pressure switches (PC/CC-8) are also connected to the containment pressure detecting line. These switches provided signals for the actuation of the containment isolation system if a pressure buildup occurs.

9.2.8 Shutdown Circulation (SC) System

9.2.8.1 Function

All of the shutdown circulation (SC) system equipment is deactivated, disabled, drained and performs no active function.

When the primary system was cool and completely depressurized for refueling or other maintenance purposes, flow could not be maintained to remove decay heat from the core because there was insufficient pressure to satisfy the net positive suction head of the primary pumps. As a consequence, a temporary SC system was provided to operate in association with the letdown coolers in the primary loop purification (PP) system to remove the decay heat during this situation.

9.2.8.2 Description

The SC system consists of a circulating pump (SC-P1), a filter (SC-El), pressure gages, a flow indicator (SC-F1), valves and piping. The suction side of the pump is connected to the PP system piping at a point between the letdown coolers and the flow control valves. The pump discharged through a rotameter and filter to the makeup line in the buffer seal (SL) system, which connected to the body of the gate valve in the reactor return line for the starboard loop. Therefore, when this system was operated, the pump drew primary water from the reactor outlet line or the port loop down through the letdown coolers and returned it to the reactor inlet line for the starboard loop. The core was cooled by natural circulation in the reactor vessel and the decay heat was dissipated to the intermediate cooling water (CW) system water through the letdown coolers. The port and starboard loops were isolated by gate valves when this system was being operated.

Two pressure gages, one on the pump suction and one on the pump discharge, along with the Rotameter on the pump discharge, were used to monitor the operation of this system.

A low-flow alarm, operated by the Rotameter, was provided in the main control room. The temperature of the primary water leaving the reactor vessel was also monitored in the main control room.

Since the SC system was designed for low pressure and connects to the high-pressure portions of the SL and PP systems, flanges were provided on each side of the loop so that the system can be blanked off when it was not in operation.

9.2.9 Primary Pressurizing (PE) System

9.2.9.1 Function

All of the primary pressurizing (PE) system equipment is deactivated, disabled, drained and performs no active function.

The functions of the PE system included the following:

- Maintain the required primary system pressure to keep the primary coolant in the liquid state;
- Limit pressure fluctuation caused by thermal expansion and contraction of the primary coolant during power plant load transients;
- Accommodate the necessary safety valves to prevent the primary system from being over-pressurized; and,
- Maintain the amount of coolant in the primary system within specified levels.

9.2.9.2 Description

The details of the pressurizer are also discussed in Chapter 7.4. The PE system consists mainly of the instrumentation and controls, heaters and associated valves and piping used to perform the system functions described above.

The pressure in the steam space of the pressurizer was detected by two separate electrical transmitters (LICRA/PE-2) using bourdon tube arrangements connected directly to the vessel. Two detector arrangements were provided to make the instrumentation more reliable. The two electrical signals were individually transmitted to the main control room, where they were used for monitoring and controlling primary system pressure.

The 160 electric heaters in the bottom head of the pressurizer are connected in five groups of 12, 12, 24, 40 and 72 units. These groups could be automatically controlled in successive steps by the pressurizer instrumentation as the pressure was reduced during an outsurge. Normally, only one group of 12 units was required to maintain the pressure at 1750 psia during steady state operation. The heaters were operated in the manual or automatic mode from the main control room. Two groups of 12 heaters could also be operated from the emergency cooling panel in the emergency diesel room on the navigation deck. In March 1976, circuit breakers for the heaters were tripped and tagged out at the switchboard.

Spray water was supplied to a nozzle inside the pressurizer with a line connected from the starboard loop reactor inlet line. The pressure drop across the reactor was used as the driving force for the spray. The two diaphragm-operated spray control valves (PE-1V and PE-3V) are connected in parallel in the line so that one acts as a standby. Normally, the spray valves were automatically operated by a signal from the pressure instrumentation, but the spray could also be operated by remote manual means from in the main control room. A diaphragm-operated stop valve (PE-2V) is located on the spray line upstream of the control valves and was controlled in the main control room. This valve was closed if the spray control valve fails to close. During an insurge into the pressurizer, the pressure instrumentation opened the spray valve so that the spray will condense the steam in the upper region and prevent an excessive pressure rise. However, if the pressure increase should be excessive, spring-loaded relief valve (PR-1V or PR-24V) would open to relieve the steam to the effluent condensing tank which could be vented to the lab waste tank. In March 1976, relief valve PR-1V was removed, the nozzle flanged and fitted with a vent, provided with an absolute filter to allow for pressure equalization.

The pilot-operated relief valve (PR-3V) was designed to open before the spring-loaded code valves to minimize the chance of leakage due to improper reseating of the spring-loaded valves. If the pilot-operated valve failed to function properly, then one of the spring-loaded safety valves would open to relieve the steam.

Two separate standpipe arrangements (LICA/ PE-2) are provided in the pressurizer for measuring the level. A small line containing valve PE-9V and an orifice is connected from the spray line (downstream of valve PE-2V) to the top of the pressurizer so that a small amount of water flows into the reference cups associated with the standpipes. This water helps kept the reference legs filled. The level was detected by two electrical differential-pressure transmitters connected to the stand-pipes. The level electrical signals were transmitted to separate selector or transfer switches on the emergency cooling panel in the emergency diesel room. The selector switches have two positions. One position was used to feed the signals to the instrumentation on the emergency cooling panel and the other position was used to feed the signals to the main control room.

Two temperature resistance elements (TIRA/PE-3) were located in the pressurizer. One was located in the steam space and the other was located in the water space. The electrical signals were transmitted in the main control room.

The temperature in the surge line between the pressurizer and the reactor outlet line was detected with a resistance temperature element located in a thermowell in the line. The electrical signal for the temperature was transmitted to the main control room.

Two venting arrangements were provided for the pressurizer. One line contains manual vent valves (WL-2V and WL-3V) and is routed to containment drain tank (PD-T4), which in turn was vented to the gas manifold in the gaseous waste disposal and collection (WL) system. Consequently, this vent line was used only when the containment vessel was accessible. The second vent line contains a diaphragm-operated valve (WL-1V) operated from the main control room. The second vent line was routed to the primary loop purification (PP) system at a point on the main line between the letdown coolers (PP-C1, PP-C2, PP-C3 and PP-C4) and the flow control valves (PP6V, PP-7V and PP-8V). During heatup and power operations, the second vent line was used to purge the pressurizer steam space of non-condensable gases and gaseous fission products. The gases subsequently collect in the buffer seal surge tank (SL-T1).

9.3 Waste Management Systems

9.3.1 Equipment Drain and Waste Collection (PD) System

9.3.1.1 Function

All of the equipment drain and waste collection (PD) system equipment is deactivated, disabled, drained and performs no active function.

The function of the PD system was to drain and collect radioactive liquid wastes of the nuclear plant.

9.3.1.2 Description

The routing of liquid drainage and storage of liquid waste is shown in Table 9-1. The piping arrangement permits transfer of the contents tanks PD-T1, PD-T2, PD-T3, PD-T5 and PD-T6 from one tank to another tank.

Table 9-1 Liquid Drainage and Storage

Source \ Storage	Lab Waste Tank PD-T1	Makeup Storage Tanks PD-T2 & PD-T3	Containment Drain Tank PD-T4	Double Bottom Tanks PD-T5 & PD-T6	Bottom of Containment	Forward & Aft Drain Wells	Waste Transfer Pump PD-P1
Primary Gate Valve Packing			X				
Containment Cooling Condensate			X				
Steam Generator (Boiler) Relief Valve Leakage			X				
Sampling System Relief Valve Leakage			X				

Source / Storage	Lab Waste Tank PD-T1	Makeup Storage Tanks PD-T2 & PD-T3	Containment Drain Tank PD-T4	Double Bottom Tanks PD-T5 & PD-T6	Bottom of Containment	Forward & Aft Drain Wells	Waste Transfer Pump PD-P1
Primary (Neutron) Shield Tank Overflow					X		
Drain From Control Rod Housing					X		
Valve Packing Leakage			X				
Effluent Condensing Tank	X						
Laboratory Waste	X						
Purification System Effluent Filter Backwash	X						
Intermediate Cooling Surge Tank Overflow	X						
Sampling Sink Drain				X			
Drain Wells				X			
Containment Vessel Drain				X			
Intermediate Cooling System Drain				X			
Buffer Seal Booster Pump Seal Leakage						X	
Buffer Seal Surge Tank Drain (primary system expansion water)		X					
Containment Drain Tank				X			
Buffer Seal Charge Pump Plunger Shaft Seal Leakage				X			
Bilge Water from Port Stabilizer Room							X
Condensate from Ventilation System						X	
Bilge Water from Buffer Seal Charge Pump Rooms							X

Liquids with a high solids content were segregated in the lab waste tank (PD-T1).

During primary system heatup, the excess primary system water from thermal expansion was kept segregated from other wastes in the two makeup storage tanks (PD-T2 and PD-T3) so that it could be pumped back into the primary loop purification (PP) system by the primary makeup pump (PD-P2) during a subsequent cooldown. Primary water was drained directly from the buffer seal surge tank to these tanks.

The containment vessel was drained by opening the diaphragm valve (PD-21V), which was operated from the main control room. A containment vessel liquid level alarm (PD-13) was located in the main control room.

The containment drain tank (PD-T4) high level was indicated and alarmed in the main control room. This tank was drained by the waste transfer pump (PD-P1) to an inner bottom tank.

Other radioactive liquid waste was segregated in the double bottom tanks (PD-T5 and PD-T6).

The contents of the lab waste tank, the makeup storage tanks and the double bottom tanks can be sampled. To obtain representative samples of the lab waste tank and double bottom tanks, the contents were circulated through the tanks while a sample was being taken. A motor-driven agitator mixes the contents of the waste tank. After the contents of a tank were mixed, the waste transfer pump circulated the liquid through the sampling bombs. An additional connection to the lab waste tank for obtaining a sample was located in the lower reactor compartment. To obtain a representative sample of the makeup tanks, the primary makeup pump was used to recirculate the tank contents and to provide circulation to the sampling sink and return lines.

A priming system is provided to prime the waste transfer pump when taking suction from one of the double bottom tanks. Lines to overboard discharge and dockside are provided from the discharge of the waste transfer pump.

All of the tanks in the drain system are vented to the gaseous waste disposal and collection (WL) system. Vacuum breakers, which admit air into the tanks, enable purging of the tank gas voids by the WL system.

Two drain wells, forward and aft, were located inside the lower reactor compartment to receive drainage from the tank tops should there be any. A sump pump (PD-P3 [fwd] & PD-P4 [aft]) controlled by a float was located in each drain well.

The buffer seal charge pump leak off tanks (22 gallons each) were could be transferred to the double bottom tanks with the waste transfer pump.

Two valved leak off lines from the reactor were used to check the effectiveness of the reactor head closure gaskets.

The waste dilution and disposal (WD) system (see Chapter 8.6.2) is connected to the PD system at two points:

- The overboard discharge line.
- The outlet header for the port and starboard charge pump leak off tanks.

There are six double bottom tanks below Reactor Compartment as listed in Table 9-2:

Table 9-2 Double Bottom Tanks below RC

Tank Description	Contents during operation	Frame Location	Approximate Volume (gallons)
Port Reactor Space Double Bottom	Salt Water Ballast	102 to 126	20,982
Starboard Reactor Space Double Bottom	Salt Water Ballast	102 to 126	20,982
Void under Reactor Compartment	Salt Water Ballast	100 to 123	56,490
Fresh Water Shield Tank	Fresh Water	97 to 126	63,650

Tank Description	Contents during operation	Frame Location	Approximate Volume (gallons)
PD-T6 Contaminated Water Tank Port	Contaminated Liquid Waste	100 to 106	2,992
PD-T5 Contaminated Water Tank Starboard	Contaminated Liquid Waste	100 to 106	2,992

The tanks are arranged as shown in Figures 9-1 and 9-2.

Figure 9-1 Double Bottom Tanks below RC

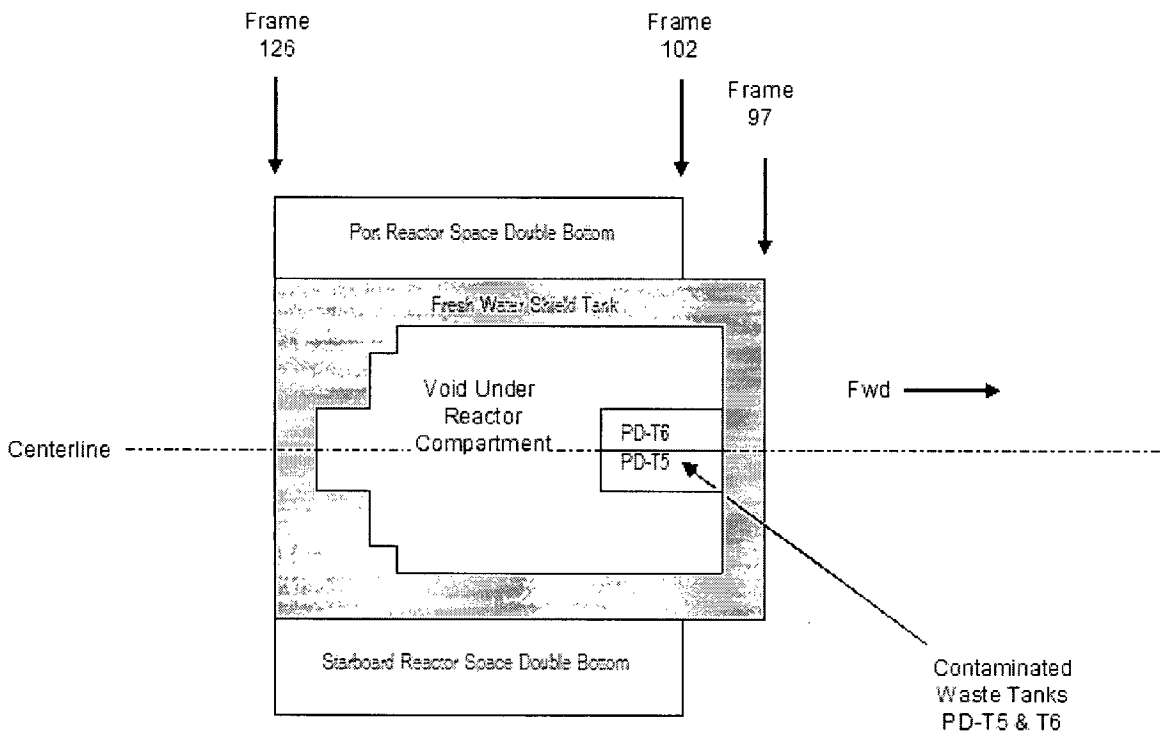

9.3.2 Gaseous Waste Collection and Disposal (WL) System

9.3.2.1 Function

The function of the gaseous waste collection and disposal system (WL system) was to provide for venting of components and equipment in the reactor systems with a minimum of shipboard area contamination.

9.3.2.2 Description

The vent facilities were divided into two sections:

- The section which vents equipment in the containment vessel.
- The section which vents equipment in the secondary shield.

Potentially radioactive gases from equipment inside the containment were collected in two vent headers and piped to the containment drain tank (PD-T4). The containment drain tank was in turn vented to a manifold (WL-F6) located in the lower reactor compartment. The vent line to the gas manifold contains two diaphragm-operated valves (WL-20V and WL-110V), which automatically close in the event of high containment vessel pressure.

The following equipment located inside the containment vessel could be vented to the containment drain tank:

- Pressurizer;
- Primary pumps;
- Steam generators (primary side);
- Effluent condensing tank;
- Secondary side of the purification letdown coolers; and,
- Reactor head.

The remote-operated vent (WL-1V) for the pressurizer was provided to avoid radioactive gas accumulation in the pressurizer. This vent operated as a pressurizer bleed and was piped to the PP system so that radioactive and noncondensible gases would be transferred to the buffer seal surge tank.

The equipment in the lower reactor compartment vented to manifold WL-F6. From the manifold, the gases flow through a line to the inlet duct of the ventilation filters.

Potentially radioactive gas sources outside the containment vessel consisted of:

- The PP system demineralizers;
- The PP system effluent filters;
- The buffer seal surge tank;
- The lab waste tank (PD-T1); and,
- The makeup storage tanks (PD-T2 and PD-T3).

The vent lines for the buffer seal surge tank, lab waste tank (PD-T1) and the makeup storage tanks (PD-T2 and PD-T3) contain flame arrestors to minimize the possibility of hydrogen explosions.

The radiation monitoring system monitored the radioactivity level of the containment air, the reactor compartment air, the vent gas manifold discharge and the stack discharge on both sides of the filters. This monitoring determined the activity released to the environment.

Figure 9-2 Double Bottom Tanks

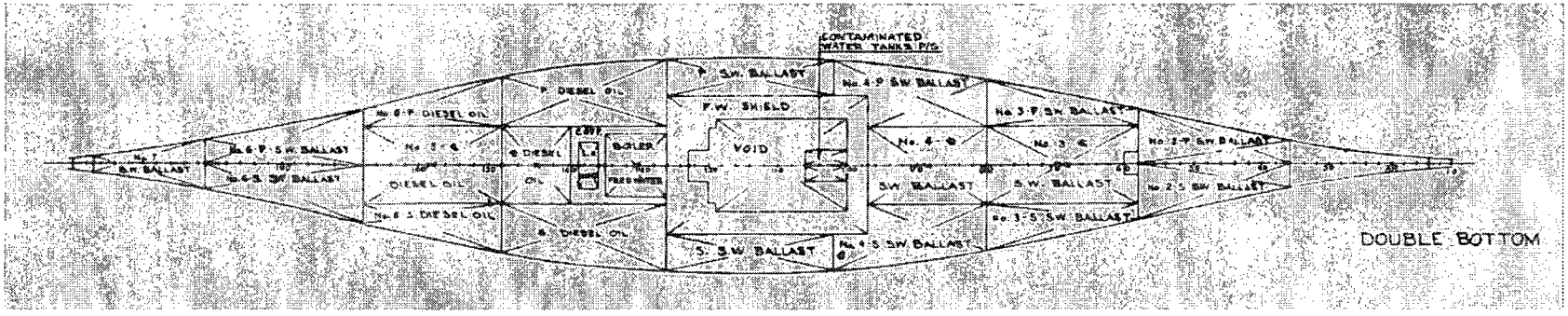

10 INSTRUMENTATION AND CONTROL

10.1 General Description

All of the instrumentation and control equipment is deactivated, disabled and performs no active function.

The reactor instrumentation and control was divided into the following five major systems:

1. Control rod drive (CRD) system;
2. Nuclear instrumentation (NI) system;
3. Safety system;
4. Non-nuclear instrumentation and,
5. Radiation monitoring (RM) system.

10.2 Plant Control Arrangement

10.2.1 Introduction

The ship's nuclear power plant was controlled both remotely and locally. Remote automatic control and manual control was achieved through the following six basic control areas:

1. Main control room;
2. Hydraulic power supply room;
3. GE cubicle;
4. Emergency generator room; and,
5. Forward control area.

The functions and contents of each control area are described in the following sections.

10.2.2 Main Control Room

The main control room houses most of the control equipment for the nuclear power plant, the main switchboard for the ship, and several small distribution panels. This control area is aft of the machinery space on D-deck; entrances are from the machinery space, the crew's passages on C-deck, and instrument-electrical shop through a water-tight door.

The main control console is located between the machinery space entrances in the center-forward section of the control room. The main electrical switchboard extends across the aft bulkhead of the control room. A rubber-matted false floor extends across the entire length behind this main switchboard. The RM system cabinets are aft of the starboard machinery space entrance, and the instrumentation and safety system cabinets are aft of the port machinery space entrance. Three transformers and the automatic bus transfer panel are located in the aft port corner. In the aft starboard corner are the vent control panel and a watertight door, which allows access to the instrument and electrical machine shop. The port side of the control room is open to the hot and cold water chemistry laboratory, where routine analytical tests are performed for maintenance of water standards.

The main control console occupies a rectangular area 19 feet by 7 feet in the center portion of the main control room. Several angular console sections form a semicircular panel, which faces forward. Mounted on the top of the vertical sections of the console is the annunciator panel. The console consists of a vertical panel mounted on an operating desk.

The main control console is divided into six sections: the left and right wings, the left and right corners, and the left and right center portions. The sections are further subdivided into the desk and panel sections. Much of the instrumentation for the nuclear power plant is mounted on the center console. Startup and support instrumentation flank this normally operating console section.

10.2.3 Hydraulic Power Supply Room

This room contains three hydraulic power units with accessories, three hydraulic oil storage tanks (total capacity 200 gallons), and the hydraulic power supply control cubicle. One power unit is for operation, one for standby, and one for reserve. The hydraulic power supply room is located adjacent to the reactor space on the starboard side of B-deck.

10.2.4 GE Cubicle

The GE cubicle and Scott-T transformer rooms are located on the port side of the cupola on B-deck. They contain the hydraulic pump control station, electrical breakers for isolating the two-phase T-bus from the Scott-T transformers, the C-bus normal power, the F-bus vital power, control rod drive system indicating lights, control rod drive system breaker and relay cabinets, Scott-T transformers, two vent control panels, an automatic bus transfer switch, a junction box, and a circuit breaker panel.

10.2.5 Emergency Generator Room

The emergency control station, emergency switchboard, emergency diesel generator and other equipment necessary for the operation of the ship under emergency conditions are located in the emergency generator room on the navigation deck.

10.2.6 Forward Control Area

This area (bounded by hold 4, the upper reactor space, D-deck, and A-deck) contains the equipment drain and waste system remote controls, the sampling station, channels 3, 8, 9, 10, and 11 of the RM system, the exhaust portion of the reactor space ventilation filtering system, and a cold-chemistry sink.

10.2.7 Data Acquisition System

The DA system equipment is housed in cabinets located in an instrument room just aft of the main electrical switchboard in hold 5. The operator had access to the equipment through an entrance from the main control room. The DA system scanned all of its inputs and stored up to 100 instrumentation points their values in its memory.

10.3 Instrumentation

All of the instrumentation systems associated with deactivated, disabled and/or drained systems are themselves deactivated, disabled and perform no active function.

10.3.1 Nuclear Instrumentation System

The NI system measured the reactor neutron flux level and its rate of change and supplies this information to the reactor operator, the reactor control system, and the safety system. Measurements were indicated at the main control console.

10.3.2 Safety System

The reactor safety system monitored signals from the nuclear and non-nuclear instrumentation systems to detect unsafe conditions. When necessary, the safety system initiated a scram where all withdrawn control rods were rapidly inserted into the core by hydraulic pressure.

10.3.3 Non-nuclear Instrumentation

The non-nuclear instrumentation system included the instruments and controls necessary to measure, indicate, record, alarm, and interlock such variables as temperature, pressure, flow level, pH, and conductivity throughout the reactor system. Independent nonnuclear instrumentation is supplied for the reactor safety system.

10.4 Reactor Control

10.4.1. Control Philosophy

Reactor control philosophy included a combination of manual manipulation of the control rods and inherent negative reactivity feedback characteristics of the fuel and coolant.

The reactor control system was designed to operate the reactor within the following restrictions:

1. Constant average primary system water temperature in steady state operation.
2. Load transient variations in primary system water temperature compatible with the capacity of the pressurizing system.

Variations in primary system water temperature and steam flow were detected by sensors, which, by action of either the operator or the control system, supplied any necessary corrective action to the control rods.

10.5 Control Rod Drive System

10.5.1 System Description

All of the control rod drive (CRD) system equipment is deactivated, disabled, drained and performs no active function as described in detail in 10.5.3.

Twenty-one electromechanical, hydraulic control rod drives are on the upper head of the reactor vessel. Each drive is connected to a control rod assembly by a vertical shaft located in a nozzle in the reactor vessel head. A buffer seal assembly prevented the primary coolant from leaking through the nozzle into the containment. The control rod was moved by the hydraulic and mechanical forces acting on the control rod and drive assembly.

10.5.2 Control Rod Drive Mechanisms

Each control rod drive mechanism consists of upper and lower sections. The upper section includes the gear motors drive shaft assembly, position indicator, limit switch, and hydraulic cylinder. The lower section of each mechanism consists of shrouds, upper and lower flanges, two leadscrews with a drive chain and drive sprockets, a drive carriage and drive nuts, tie rod assemblies, a scram time test spring, a latch assembly, latch rods, and two limit switches. The gear motor acted through the drive shaft assembly positioned the drive carriage through the action of two drive nuts on the leadscrews. In normal operation, the control rod shaft was held against the drive carriage by the force of the primary system pressure acting on the shaft, which penetrates the reactor vessel. A thimble platform scram stop assembly is located below each lower section.

10.5.3 System Status as of March 1976

10.5.3.1 Electrical Status

The breakers for the rod drives are opened and tagged in the Control Rod Drive Electrical Cubicle and the Control Room. The cables between the junction boxes on the Control Rod Drive (CRD) structure and the junction boxes located around the periphery of the cupola are

disconnected, coiled and secured on the CRD structure in the containment vessel. The support wireways are removed, packaged and were stored on Hold 4. The twenty one buffer seal flow meter cables and the vibration monitor cables are disconnected.

10.5.3.2 Mechanical Status

Hydraulic oil is drained and the piping disconnected between the cupola and the CRD structure. Buffer seal system valves are closed and tagged out. The inlet and outlet header spool pieces between the cupola and structure are removed. The buffer seal system is drained. The twenty-one control rods are disconnected from their respective CRD extension shafts and remain in their fully inserted position between the empty fuel location channels. The CRD extension shafts are disconnected from the lead screw and are in a fully inserted position from the reactor head nozzles to the top of the control rods. The CRD lead screws are withdrawn and pinned in place. Steel caps are placed onto the twenty-one reactor head nozzles to completely seal the nozzle from the containment vessel atmosphere and mechanically separate the CRD mechanism from the control rod.

10.6 Radiation Monitoring System

The radiation monitoring system (RM system) was intended to provide information for personnel protection against possible radiation hazards. It also provided necessary functional radiation data from the plant and information on the radioactivity levels of the waste disposal, stack, and ventilating system intake ports.

The monitoring locations were selected to provide maximum support to the overall ship's health physics program. It was intended that identical and redundant functions be performed by both the health physics group and the RM system. These functions included area monitoring, checking demineralizer depletion, and monitoring for radioiodine to detect the fuel element failure. Routine health physics surveys, film packs, and secondary system water chemistry analyses were made to detect the presence of any abnormal activity level.

The RM system is deactivated, disabled and performs no active function. Radiological monitoring is performed in accordance with regulatory requirements per approved Radiation Protection procedures. These procedures address issues such as:

- Use of Area Monitoring thermoluminescent dosimeters (TLDs) and evaluation of their data; and,
- Radiological surveys that evaluate radiological conditions and potential hazards incident to the production, use, transfer, release, disposal, or presence of radioactive material or other sources of radiation.

11 CONDUCT OF LICENSED ACTIVITIES

Until the N.S. *SAVANNAH* (NSS) is licensed to proceed with decommissioning activities, the NSS is being maintained in a state of protective storage in accordance with the operating, possession-only, License, Technical Specifications and Port Operating Criteria. These documents contain the significant design and protective storage criteria for the ship. These criteria are established to ensure the health and safety of the public.

11.1 Organization

The MARAD Office of Ship Disposal has the responsibility for safely performing licensed activities. As a result of the 2007 reorganization, this responsibility was moved from the Office of Ship Operations to the Office of Ship Disposal. Lines of authority, responsibility and communication are procedurally defined and established. The relationships shall be identified and updated, as appropriate, in organizational charts, functional responsibility and relationship descriptions, job descriptions for key personnel positions, or equivalent forms of documentation.

a. The Maritime Administration's Senior Technical Advisor (STA) has overall responsibility for administration of the NS-1 license and will provide guidance and oversight to the Manager–N.S. *SAVANNAH* Programs (MSP). The MSP is responsible for the execution of all program activities including routine radiation surveillance, ship custody decommissioning and historic preservation. MARAD may assign a single incumbent to both positions.

b. The Decommissioning Program Manager is responsible for administration of all facility functions, for direction of all licensed activities, and for assuring that the requirements of License No. NS-1, Technical Specifications and Port Operating Criteria and Port Operating Plans are implemented.

d. The Facility Site Manager is directly responsible for the physical reactor, nuclear systems, and radiologically controlled material, components, and equipment onboard the N.S. *SAVANNAH*. The FSM provides on-site management and oversight of licensed activities, including direct oversight of the routine radiological monitoring and surveillance program. The FSM provides technical direction and guidance on overall ship husbanding and maintenance.

e. The Radiation Safety Officer (RSO) is responsible for the conduct and oversight of all radiation safety activities through implementation of the Health Physics Manual. All radiological controls personnel have stop work authority in matters relating to or impacting radiation safety.

f. The Quality Assurance Manager (QAM) is responsible for assuring implementation of the Decommissioning Quality Assurance Plan. This manual has been established to control the activities performed by the NSS Decommissioning Project and its contractors, within the scope of this Plan.

j. A significant portion of the decommissioning project work is intended to be performed by contractors. MARAD personnel, reporting directly to the MSP, will be responsible for assigned contractors and providing the contractor direction, coordination and interfacing communications. The QA Manager will provide independent verification of contractors and the contractor's QA Manual (if applicable) which will be approved by the NSS Project on a case by case basis.

k. Safety Review Committee was established by License Amendment 14 to replace the Review and Audit Committee. Because the audit function is performed in accordance with the Decommissioning Quality Assurance Plan, the audit did not have to be exclusively assigned to the Review and Audit Committee. As part of their review function, they review completed audits.

11.2 Training

Training shall be provided for the indoctrination and training of personnel performing activities associated with the protective storage and decommissioning of the NSS as necessary to assure that suitable proficiency is achieved and maintained. The program shall take into account the need for special controls, processes, equipment tools and skills to perform the task assigned.

Training programs shall be established for those personnel performing quality affecting activities such that they are knowledgeable in the quality assurance program and proficient in implementing these requirements. These training programs shall assure the following:

a. Personnel responsible for performing these activities are instructed as to the purpose, scope, and implementation of applicable procedures.

b. Personnel performing such activities are trained and qualified, as appropriate, in the principles and techniques of the activity being conducted.

c. The scope, objective, and method of implementing the training are documented.

d. Methods are provided for documenting training sessions. They describe content, attendance, date of attendance and the results of the training session, as appropriate.

11.3 Procedures

Written procedures are established, implemented and maintained to provide for the control and performance of those protective storage and decommissioning activities which affect quality, health and safety of the public and project personnel, or regulatory requirements.

The following typical procedures shall be provided as appropriate:

Administrative control procedures;

Audit procedures;

Calibration procedures;

Dismantlement procedures;

Emergency procedures;

Inspection procedures.

Maintenance procedures;

Radiation protection procedures;

Rigging, lifting and handling; and,

Special process procedures.

Procedures are reviewed and approved as described in the Quality Assurance Plan and Technical Specifications.

11.4 Records

Decommissioning records will be maintained in accordance with the Quality Assurance Plan and Technical Specifications.

11.5 Quality Assurance Plan

The Quality Assurance (QA) Plan is issued under the authority of the STA and is the highest NSS document which provides generic and specific requirements and methods to control activities. The term "QA Program" includes the Plan and the approved documents which are used to implement the Plan. The Plan is implemented through such approved documents.

Revision 0 to the QA Plan was prepared and submitted for review and approval October 31 2006. In response to comments from the NRC, Revision 1 to the QA Plan was prepared and submitted on February 28, 2007 for review and approval. It was accepted by the NRC on March 22, 2007. Revision 2 to the QA Plan was prepared to replace the Review and Audit Committee with the Safety Review Committee based on License Amendment 14. The revision was evaluated to confirm that it contained no reductions in commitment and was submitted on April 30, 2008.

The NSS Quality Assurance Program has been established to control the activities performed by NSS and its contractors, within the scope of the Plan. This control is exerted primarily through the provision of, and compliance with, implementing documents and assurance that such documents are adequate and consistently used.

Adherence to the requirements of the QA Plan is mandatory for all NSS organizations and for all external organizations providing items, parts or materials, or conducting activities which are within the scope of this Plan.

Prior to development of the QA Plan in 2006, the underlying intent of 10 CFR Part 50, Appendix B was met by quality assurance requirements imposed on the Review and Audit Committee in the following Technical Specifications until revised in License Amendment 14 as noted in 11.1.h, above:

3.6.2. Members of the Committee shall conduct audits, on-the-spot checks, and evaluations to assure that all work is being done safely and in accordance with established procedures. If a deficiency is discovered, the Senior Technical Advisor, U.S. Maritime Administration, Washington, D.C., is to be notified immediately. The license holder is to take the necessary immediate corrective action, and a written report of the deficiency is to be prepared for review by the Committee.

11.6 Port Operating Plans

The Port Operating Criteria establish the basic limitations on the ship's operations in all ports and delineate the requirements for the Port Operating Plans. The requirements are described in Chapter 3.

11.7 Radiation Protection Plan

All licensed activities will be accomplished in accordance with the Radiation Protection Plan which includes Health Physics Manual, its replacement or any commensurate contractor program.

The Radiation Protection Plan is implemented to control radiation hazards to avoid accidental radiation dose, maintain doses within the regulatory requirements, and also maintain doses to the workers and the general population as low as reasonably achievable (ALARA). These philosophies, policies, and objectives are based on, and implement, the regulations of the NRC, as contained in Title 10 of the Code of the Federal Regulations (10 CFR) Parts 19, 20, 50, and 71, and the appropriate Regulatory Guides. In addition, the Radiation Protection Plan supports the licensed and decommissioning activities by providing radiological data and documentation of the site release survey.

Historically, radiation protection including radiological monitoring and other shipboard health physics activities have been carried out in accordance with the Health Physics Manual. It describes the standards, policies, and detailed instructions relative to radiation protection. It also specifies operational procedures

for health physics personnel. This document or any document that replaces it will be revised as necessary to support pre-decommissioning activities.

Procedures used for waste handling processing and characterization will be developed and used as required, with approval controls, throughout decommissioning. In addition, isotopic analyses, waste characterization computer codes and activation analyses are some of the methods which have been and will continue to be used to characterize the waste streams resulting from the NSS's decommissioning. The procedures will meet 10 CFR 20, 10 CFR 61, disposal site criteria, and other Federal and State regulations.

Radwaste shipping and handling will be performed in accordance with the Quality Assurance Plan, applicable NRC and DOT regulations and administrative procedures. Radioactive waste and material will be shipped either by truck including open and closed transport, trailer mounted shipping cask or by a combination of truck and rail. Shipments will be planned in a practical and efficient manner. Facility procedures will be used with appropriate quality oversight to ensure the shipments are in compliance with company procedures, regulations and the receiving site licensee. Packages, packaging, and labeling for radioactive materials and waste will meet all applicable regulations and requirements.

11.8 Industrial Safety

There is a potential for workers to experience injuries and fatalities as a result of accidents occurring during protective storage or decommissioning activities. Accidents could result from falling objects, fires, operation of equipment, use of tools, lighting equipment and other activities.

The Coast Guard regulations in § 33 CFR 150.600 Subpart G -Workplace Safety and Health discuss requirements for workplace safety and health on a deepwater port. As necessary, this regulation refers to 29 CFR 1910, Occupational Safety and Health Standards. 29 CFR 1910.15, Shipyard employment adopts that 29 CFR 1915 for shipbreaking. Shipbreaking is defined as any breaking down of a vessel's structure for the purpose of scrapping the vessel, including the removal of gear, equipment, or any component of a vessel. Although MARAD is not scrapping the NSS, the projected industrial activities associated with decommissioning most closely conform to this definition. Therefore, the shipbreaking code will be adopted for this activity. The occupational health and safety of workers will be protected by implementing measures in accordance with these regulations

11.8.1 Occupational Health and Environmental Control

Facilities and equipment will be provided to protect the occupational health of workers during the protective storage and decommissioning activities of the NSS. Such facilities and equipment include first aid kits within work areas, nearby medical facilities, transportation for injured workers, environmental controls in work areas (i.e. adequate ventilation, dust control, illumination, noise control, potable water and sanitary facilities), radiation protection and asbestos protection.

11.8.2 Personal Protection

Personal protection devices provided workers will include, as necessary, hardhats, hearing protection devices, eye and face protection devices, hand protection and respiratory protection devices.

11.8.3 Lifting and Handling Equipment

Lifting and handling equipment will comply with manufacturer's specifications and limitations. Requirements regarding the rated load capacities, operating speeds, hazard warnings or instructions will be followed.

12 SHIP ACCIDENTS

12.1 Introduction

The N.S. *SAVANNAH* (NSS) was designed to comply with the highest contemporary standards of safety in respect to conventional ship hazards as well as the potential hazards associated with the operation of a nuclear propulsion plant. The results of calculations in this chapter reflect contemporary best practices in the mid-1950's. Following permanent defueling in Fall 1971, the potential hazards associated with the remaining residual radioactive material are significantly less than those of a land based operating plant.

The following basic safety criteria were established early in the NSS program:

- The NSS shall be as safe as any other vessel in her class with respect to the usual hazards at sea; and,
- No hazardous radiation exposure shall result from any credible accident.

The accidents to which a ship is exposed in normal operation include collision, grounding, flooding, sinking, heavy weather, fire, and explosion - all of which have been analyzed in detail. It should be noted that these hazards are considered principally from the standpoint of release of radioactive material rather than from the conventional aspects of safety of life at sea. The safety of the crew from the normal hazards of ocean travel is adequately handled by compliance with existing maritime regulations. Normal ship safety requirements are treated only to the extent that they affect the NSS's ability to avoid or withstand severe damage. The special hazards associated with war service (ballistic and mine damage) were not considered.

Since defueling in Fall 1971, NSS is not capable of propulsion or generating its own electrical power. The ship relies on shore power supplies for lighting and other hotel loads. Tugboats are utilized to move the ship. However, the ship is structurally sound and has maintained conventional ship safety with respect to at-sea hazards. Since the nuclear fuel has been removed, limitations to operating restrictions associated with the original Maximum Credible Accident are no longer applicable.

12.2 Conventional Ship Safety

The safety of any ship depends on three factors:

- Care and judgment of responsible personnel.
- Complete and immediate knowledge of potential hazards by responsible personnel.
- Complete control of the vessel and equipment at all times.

Since the ship must be towed, control of NSS strictly lies with the tugboat operators. Avoiding potential ship hazards is primarily a function of communication and navigation and is the responsibility of the tugboat company. The Maritime Administration will ensure the tugboat company is fully qualified. The most important factors in safety at sea - care and judgment - do not result from the design of a ship. They are the results of tugboat operator training, experience, and vigilance.

12.3 Collisions and Allisions

Whether underway or under tow, almost all collisions between ships at sea can be traced to errors in the judgment of responsible personnel. Collisions attributable to equipment failure occur only rarely. Because collisions cannot be eliminated through design, provisions were made in the construction of a nuclear-powered ship to protect the reactor and containment against the effects of collisions.

In its present (2009) condition, the NSS will most often be stationary; either moored at a layberth or in a ship repair facility. In most such cases there will be an allision threat if the mooring location is adjacent to a regularly-travelled transit or channel. Marine allisions are striking incidents between a moving vessel and a stationary object. The stationary object can be any marine structure (quay, dock, bridge, etc.) or moored/anchored vessel. Allisions are generally of much lower total energy than collisions; consequently, the design provisions that protect against collision effects will also adequately protect against the effects of allisions.

During the ship's design and construction phase, a thorough study of contemporary collision records was undertaken to determine the mechanisms of collision and to define the magnitude of damage to be expected. In the course of the investigation, the available data on some 60 major collisions were reviewed. Data were collected from USCG reports on collision circumstances, the ABS and United States Salvage Association damage surveys, testimony of passengers and crew members who had experienced collisions and U.S. Navy damage reports. Additionally, statistical data on ship collisions were obtained from U. S. Salvage, Lloyds and underwriting organizations.

Very few collisions are recorded involving passenger ships in harbors, and none are included in the statistical sample used to develop the probability data. In the rare event of a harbor collision, the very low speeds used would preclude penetration of the reactor compartment.

The findings of the contemporary collision studies are summarized as follows:

- Collision offers no danger of shock damage to the reactor components.
- Containment rupture resulting from collision in a harbor is practically impossible.
- Collisions involving containment rupture are limited to areas outside of harbors. The probability of such an event over the life of the ship is very low, in the order of 1.0E-5. This figure compares favorably with values given by the AEC for an uncontained release from shore-based reactor plants. Additionally, since the area of greatest danger extends to 100 miles at sea, the degree of probable isolation is greater than that for any shore-based power reactor.

Given that the few remaining ship movements for the NSS will take place under tow and that the ship's passive collision protection systems remain functional even in an era of much larger ships than contemplated by the designers of the NSS, the vessel remains adequately protected against collision and /or allision effects. Because the primary, auxiliary and secondary systems have been drained to the maximum practical, the reactor has been permanently defueled, the tanks containing radioactive wastes have been drained and the demineralizers and their resins have been removed, the consequence of any collision or allision is greatly reduced from that during the period of NSS operation.

12.4 Grounding

Whether underway or under tow, the effects of grounding are similar to those of collision, because crushing of the ship's structure and shock may be expected. In all severe cases of grounding, extensive crushing of structures held accelerations to very low levels, indicating that shock in grounding is of little concern from the standpoint of reactor safety.

The damage sustained in grounding is strongly dependent upon the state of the sea and the type of bottom on which the grounding takes place. In harbors or sheltered waters, structural damage is generally limited to that incurred in initial contact since there is little tendency for working of the ship by the action of the water. The majority of these groundings would be bow-on or stern-on and would not normally involve the reactor compartment. Damage to the inner bottom near the reactor compartment could result from certain infrequent harbor groundings. Even if low-level, liquid wastes were again stored in the inner

bottom tanks, releases from these tanks and the low level of activity of the wastes limits the hazard to the general public. The probability of even a very limited release of low-level waste is considered negligible.

On very rare occasions ships have been known to lie over on one side following grounding or sinking in shallow water. This heeling action occurs over a relatively large period of time. Few, if any, activities would be in progress during any ship movement and those could be secured or completed prior to severe heeling. The reactor primary system and other vital auxiliaries are sufficiently braced to prevent dislocation of components should this occur. No failure of primary system or containment can result from the ship resting on its side.

Grounding in unprotected waters results in more extensive damage because of the working of the ship by the action of the sea. In the worst case, the ship may pivot about the point of contact and eventually break up. Such breaks will not occur in way of the NSS's reactor containment, because of the deliberately designed discontinuities in the hull girder forward and aft of the reactor compartment. This has been modified to some degree in the case of the hull girder forward of the reactor compartment by the reinforcement of the port and starboard sides of A-deck in the way of hold hatches 3 and 4 with continuous longitudinal and transverse intercostal girders.

However, calculations for the ship's strength in the way of the reactor compartment as compared with hold 4 indicate that the structure in the way of the reactor compartment is still considerably stronger against bending in a vertical plane than the structure forward of the reactor compartment. It is particularly stronger in the bottom section modulus, which indicates that the ship could sustain substantially higher secondary stresses from hydrostatic loads or grounding concentrations in the way of the reactor space. Calculations for bending in a horizontal plane indicate that the section through the reactor compartment is about 22% stronger than the section through hold 4 after reinforcement.

After the reactor compartment section has broken free of the water-borne sections or after the water-borne sections have sunk, the relatively short containment vessel, with its great strength and weight, will have little tendency to move under wave action, and structural damage will be greatly diminished. Under these conditions, release of any residual low-level wastes and other equipment outside of the containment must be assumed. The small radioactive inventory in this equipment is not considered a source of danger to the environment because areas in which such groundings can occur are fairly remote. Since the primary, auxiliary and secondary systems have been drained to the maximum practical, the reactor has been permanently defueled, the tanks containing radioactive wastes have been drained and the demineralizers and their resins have been removed, the consequence of any grounding is greatly reduced from that during the period of NSS operation.

Ship grounding occurs much less frequently than collision. The ports where the NSS will be layberthed and eventually, decommissioned are well-charted ports. The tugboat operators and pilots are generally well aware of the local hazards. As such, the NSS, which had operated as a cargo ship in liner-berth type service, continues to be less likely to be grounded than other types of vessels.

12.5 Heavy Weather

While under tow in heavy weather conditions, the NSS is exposed to the most severe loadings on equipment foundations and structures. Since accelerations in collision and grounding are much less than those imposed by roll, pitch and heave, the design of the NSS was dictated by the heavy weather considerations.

Although considerable data have been compiled on roll, pitch and heave in moderate-to-very rough seas, only spot reports are available for extreme conditions. Since extreme conditions occur at rather rare intervals, long periods of careful measurement at sea are required to obtain an adequate statistical sample. Therefore, maximum accelerations under extreme conditions cannot be defined at present (i.e., 1968).

For many years, it has been the practice to design merchant ships to severe conditions (less than extreme), with relatively high safety factors. The soundness of this approach is evidenced by years of experience in which ordinary merchant ships have survived hurricane seas without damage.

In September 1964 and in February 1965, the NSS encountered severe storms at sea. After the latter storm, buckling of A-deck in the way of hatch 4 on both port and starboard sides was quite apparent. As a result of investigation, data collection, and calculations, it was concluded that the hull had ample strength reserves against static forces arising from bending on standard waves. However, the buckled deck was produced by overstressing under sagging compression after initial deflection from other causes. These ship motions occurred in heavy and confused seas, while in a light ship condition.

The A-deck was reinforced during the NSS's 1965 Galveston Outage to provide greater resistance to buckling of the deck plating under sagging compression, so that the resulting stresses will be axial with respect to the plating. Calculations show the deck stresses are well below generally acceptable values. The longitudinal girders provide assurance that the plating will remain in position to absorb these compressive stresses without additional bending stresses due to deflections. The reinforcement is considered adequate to minimize the possibility of a future recurrence of the deck buckling.

The NSS propulsion machinery was designed with the following specifications for roll, pitch, and heave:

Maximum roll 30 degrees from the vertical, with periods of 13 and 23 seconds (center of roll 20 to 30 feet above the baseline) in light and loaded conditions.

Pitch and heave - maximum pitch amplitude of 7 degrees combined pitch and heave accelerations, 0.25 to 0.30 g at the reactor.

These criteria represent very severe conditions, and in no case will they be exceeded by a factor as great as two. Ship motion can be sharply reduced by changing course and speed in heavy seas.

The safety factors employed in the design of the NSS are considered adequate, and it is estimated that all her components can withstand accelerations of at least 1 g, and in most cases 2 g. Since the maximum loading (static plus dynamic) defined by the design criteria is about 0.6 g (roll), the margin is fully adequate for maximum sea conditions. No damage to machinery components from ship motion has resulted in previous storms or is expected under any sea condition.

12.6 Fire and Explosion

All of the originally installed fire protection system equipment, with the exception of a limited number of portable fire extinguishers, is deactivated, disabled and performs no active function.

Fire from an external source is not considered a threat. External explosions present only a missile hazard, and the reactor and containment are well protected by the ship's structure and the reactor's shielding. The berthing area surrounding the ship is maintained and kept free of any significant quantities of combustible vegetation and material. The local fire company will respond to fires adjacent to the ship (e.g., pier, berth, drydock, etc.) that could pose a threat to the ship.

The possibility of internal fire and explosions is minimized since the NSS is no longer in commercial operation. During the period of protective storage, the possibility of fire is virtually eliminated by control of transient combustibles and the lack of any routine, significant industrial activity. During any period of industrial activity, appropriate controls are established regarding prevention, detection and mitigation of fire.

The Fire Detection and Alarm System is described in Section 2.4.2.

Regardless of the cause of a fire, damage to the reactor and auxiliary systems should be negligible and, in general, limited to shielding. Since the reactor has been defueled since Fall 1971, the major source of radioactivity has been removed. Hence, fire and resulting damage to shielding is not considered a threat to nuclear safety.

The local fire company will respond to fires on the ship. To ensure they are sufficiently trained to fight shipboard fires, they are invited to attend indoctrination training that includes a discussion of ship hazards and a familiarization tour.

Transient combustibles will be controlled to limit the combustible material available to fuel a fire. Hot work permits will be required to control spark producing activities and the use of ignition sources. Work area safety inspections and trained fire watches will be required as appropriate for hot work activities.

12.7 Flooding and Sinking

During its operating period, preservation of the containment vessel after a sinking event was assured by flooding hatches (located in the containment shell) which would open automatically when the ship submerged in deep water. When the pressures were equalized inside and outside the containment vessel, the flooding hatches would close automatically, sealing the vessel. This protected the containment shell against external pressures in deep sinking. These hatches remain installed but have not been verified functional since final shutdown in November 1970.

12.8 Salvage

Salvage methods depend on the depth of the water since operational difficulties increase with depth. In less than 300 feet of water, almost complete control of the containment is possible. Salvage connections, sized to take a standard U.S. Navy diver's hose, are located on the head of the containment shell cupola. These connections permit sampling and purging of the containment contents. If permanent immobilization is required, the same connections can be used to fill the vessel with concrete.

If sinking occurs in water less than 100 feet deep, the ship and the containment may be raised and salvaged. At these depths, the containment is flooded with salt water. Under extreme diving conditions, which limit underwater salvage, the ship's structure could be removed from the containment vessel and the containment raised by tidal lift.

At depths greater than 300 feet, the ship is inaccessible to salvage. The flooded containment vessel is a very effective waste disposal package. With the low corrosion rates in deep water, it will take many years for the sea water to penetrate the containment shell. Most of the fission products will be contained within the massive primary system, and the probability of environmental contamination is negligible.

The methods of immobilization and recovery used to salvage the sunken vessel can also be used to salvage the grounded vessel. The accessibility of the grounded vessel will generally simplify the operation.

In conclusion, little or no hazard to the environment is anticipated from either the sunken or the grounded ship.

13 RADIOLOGICAL AND ENVIRONMENTAL CHARACTERIZATION

Chapter 13 is a completely new chapter added in Revision IV of the FSAR.

13.1 Radiological Characterization Scoping Survey

In 2005, a radiological and environmental characterization scoping survey of the N.S. *SAVANNAH* (NSS) was conducted. This characterization task was intended to provide a basis for estimating the cost of decommissioning. It is documented in NSS Radiological and Non-Radiological Spaces Characterization Survey Report, Sept 22, 2005, Rev 0.

The CV entries associated with this effort were the first in over thirty years. The observed conditions generally supported the reported conditions of 1976. However, discrepancies were noted such as presence of hydraulic oils, migration of primary system water, significant quantities of trash/debris and superficial surface corrosion of components and lighting fixtures.

In-depth surveys to determine the extent and types of radioactive materials present were only conducted in those locations and equipment/structures that were expected to be radioactive. The remaining areas (principally aft of the engine room, forward of the reactor compartment, and in the mid-ship-house and public areas) were surveyed less rigorously than radiological areas but in sufficient detail to confirm that no radioactive materials reside in those locations.

One hundred eighty-five areas of the NSS were evaluated for radioactivity, including nine decks and seven compartments or areas that span decks vertically. The following sampling was performed:

- 1423 smears surveys;
- 26 paint scrapings;
- 14 metal samples;
- 6 reactor compartment concrete core bores;
- 10 crud (solids) samples from the primary system;
- 4 primary water samples from the steam generators;
- 1 water sample (chromated water over-rinse residue) from the empty primary (neutron) shield tank; and,
- 11 air samples for radioactive contaminants.

Findings of this characterization effort are as follows:

- Absence of fission products (other than trace quantities of cesium-137), uranium and its daughter isotopes, as well as transuranics (e.g., plutonium), indicates there were no significant fuel failures;
- Crud contribution to total curie content is minimal;
- No contamination was found in the non-radiological spaces;
- Minimal contamination was found in radiological spaces;
- Overall dose rates were much lower than expected;
- Sites previously identified as radiologically contaminated were found uncontaminated;, and,

- Containment vessel systems, structures and components were exceptionally radiologically clean.

The Characterization Project concluded that the NSS is in very good condition from a radiological perspective to support decommissioning. The data obtained in this program may be used to develop the following:

- Comprehensive decommissioning strategies along with bounding the costs;
- Effective and appropriate decontamination and dismantling techniques;
- Activity sequences to support decommissioning;
- Radioactive material disposal strategies;
- Assessments of potential hazards during decommissioning and decontamination work to develop ALARA controls;
- Accurate schedules; and,
- Cost estimates of the overall program.

13.1.1 Dose Rates

For radiological areas outside of containment and the reactor compartment, general area dose rates ranged from background to 50μR/hour. Contact readings on some pipes reached 2mR/hour.

In non-radiological areas, general area dose rates were at or below background, with one exception in Cargo Hold 4, where shine from the Cold Water Chemistry Lab, upper level [originally the Radiation Monitoring Room (C-deck level, forward of the reactor compartment Frames 99- 102)]. produces approximately 250μR/hour at the Cargo Hold 4 aft bulkhead. Shine is radiation emanating from another location on the ship but being measured remotely.

Inside the reactor compartment, dose rates in the upper levels were essentially background. In the lower reactor compartment levels, general area dose rates varied 0.3–1.6 mR/hour, with contact readings of up to 221 mR/hour.

Inside containment, general area dose rates varied 0.1–10 mR/hour, with the highest contact reading around the "U" tube end of the steam generators of 35 mR/hour.

Inside the steam generator primary side inlet plenum dose rates were a maximum of 344 mR/hour in the mid-plane of the plenum and the highest contact reading was 812 mR/hour, on the tube sheet.

A dose rate summary is included in the following sections.

13.1.2 Radiological Contamination

No loose radiological contamination was found in unexpected places. Very little contamination was found in areas where it was expected. For example, following all entries, outer shoe covers and outer gloves were frisked and no radiological contamination was found. Several stateroom toilets, sinks, and floor tiles were found to contain naturally occurring radioactive material (NORM). A summarization of these areas is included in the following tables.

13.1.3 Non-Radiological Areas

The non-radiological areas were clear of detectable radiological contamination. The non-radiological areas evaluated are summarized in Table 13-1.

Table 13-1 Non-Radiological Area Summary

Deck/compartments	No. of areas evaluated	Dose rate found	Contamination found
Navigation Bridge Deck	8	Background	All < background
Boat Deck	10	Background	All < background
Promenade Deck	2	Background	All < background
"A" Deck	20	Background	All < background
"B" Deck	44	Background	All < background
"C" Deck	31	Background	All < background
"D" Deck	11	Background	All < background
Weather Deck ("A" Deck) fwd and aft	15	Background	All < background
14' Flat Deck	5	Background	All < background
Hold Deck	6	38 μR/hour*	All < background
Cargo Hold Number 4 (aft)	5	250 μR/hour**	All < background
Machinery Casing, boat to "C" Deck	4	Background	All < background
Engine and Control Rooms	8	Background	All < background
Hold Number 5, engineering space	2	Background	All < background

* Hold Deck had a pipe running under the deck plate in the passageway that read 38 μR/hour on contact. This pipe ran through a portion of the crossover area also. The pipe is for the equipment drain and waste collection (PD) system. Lower dose rates were recorded at various areas of the passageway above the deck plates.

** Hold Number 4, "D" Deck Starboard, had readings on the aft bulkhead up to 250 μR/hour. This appears to be shine from the Cold Water Chemistry Lab, upper level [originally the Radiation Monitoring Room (C-deck level, forward of the reactor compartment Frames 99- 102)].

13.1.4 Radiological Areas

Table 13-2 provides a summary of radiological condition found during the evaluation of radiological areas excluding the containment vessel and the reactor compartment. The values listed are maximums.

Table 13-2 Radiological Area Summary

Deck/compartments	Dose rate found	Contamination found ($dpm/100cm^2$)
Hot Chemistry Lab, "D" deck off of the control room	Background	< 1000

Deck/compartments	Dose rate found	Contamination found (dpm/100cm^2)
Port Forward Stabilizer Room, upper level off of 14' flat	8 μR/hour	All < background
Port Forward Stabilizer Room, lower level	150 μR/hour	All < background
Fan Room "B" Deck, starboard side	Background	All < background
Stateroom B-1 (radiological waste storage)	Background	All < background
Cold Water Chemistry Lab, upper level (originally Radiation Monitoring Room, C-deck level)	50 μR/hour	All < background
Cold Water Chemistry Lab, lower level (originally Radiation Sampling Room, D-deck level)	2000 μR/hour	Max 3904
Hold #4, "D" Deck, starboard	250 μR/hour	All < background
Buffer Seal Charge Pump Rooms, port and starboard	180 μR/hour	All < background
Health Physics Lab., "A" Deck (originally Operating Room and Dispensary)	5 μR/hour	Max 1221
Hold Deck, outside containment, port-to-starboard crossover passage	25 μR/hour	All < background
Hold Deck, outside containment, port and starboard passages	38 μR/hour	All < background

13.1.5 Reactor Compartment (Secondary Containment)

As described in Chapter 4.3, the reactor compartment surrounds the containment vessel and forms a secondary containment around the containment vessel. Table 13-3 summarizes radiological conditions found during the evaluation of the reactor compartment. The lower level of the reactor compartment was sometimes called the secondary shield area because it was an "area" (i.e., volume) enclosed by the secondary shield.

Table 13-3 Reactor Compartment Radiological Summary

Deck/compartments	Dose rate found	Contamination found (dpm/100 cm^2)
"B" Deck, access area aft of reactor	Background	All < background
"B" Deck, area forward of reactor	Background	All < background
"C" Deck forward, access from "B" deck	Background	All < background
"A" Deck around cupola	Background	All < background
Top of Cupola	4 μR/hour	All < background

Deck/compartments	Dose rate found	Contamination found (dpm/100 cm^2)
Aft Mezzanine, mid level between "C" and "D" Decks	3–5 μR/hour	All < background
Lower level reactor compartment	221 mR/hour	All < background

13.1.6 Containment Vessel

Table 13-4 provides a summary of radiological conditions inside of the containment vessel.

Table 13-4 Containment Vessel Radiological Summary

Deck/compartments	Dose rate found	Contamination found (dpm/100 cm^2)
Containment, upper hatch closed	15 μR/hour	All < background
Containment, upper hatch open	400 μR/hour	All < background
Containment, 1st level	500 μR/hour	1200
Containment, inside shield tank upper ring	7 mR/hour	All < background
Containment, 2nd level	3 mR/hour	All < background
Containment, 3rd level	10 mR/hour	< 1000
Containment, 3rd level, area over U-tube steam generator	35 mR/hour	< 1000
Containment, 4th level	3 mR/hour	All < background

13.1.7 Estimate of the Quantity and Distribution of Radionuclides

In order to assess the radioactivity in residual liquids and transferable contamination that may be subject to a spill or spread in the event of damage to the ship or flooding of compartments containing reactor systems, an estimate of the quantity and distribution of radionuclides in primary and auxiliary systems was performed. The quantity of radioactivity deposited in the system as contamination is very small compared to the total estimated activity in reactor vessel components.

Scans and samples confirmed that the primary nuclide deposited on surfaces in primary and auxiliary systems is Co-60. The total estimated inventory of Co-60 in surface deposits is approximately 108 mCi. Cs-137 is the predominant nuclide present in residual water (approximately 1500 gallons) within the primary coolant system. The total waterborne Cs-137 content in the reactor system is estimated at about 5.91 mCi.

These two nuclides represent the bulk of the potentially mobile nuclide inventory. The estimate supports the conclusion that even a worst-case incident, resulting in the loss of all the transferable contamination to the environment, would have no significant impact on the environment or on dose

to the public in that the radiological consequences of a breech to the primary coolant system would be insignificant

13.1.7.1 General Approach

The methods used to estimate the residual radioactivity were analyzing liquid samples from the primary coolant system and directly scanning smears and liquid samples with portable gamma spectroscopy equipment.

13.1.7.2 General Findings

Co-60 was expected to be the most widespread nuclide in the primary coolant system due to the radiological decay characteristics of the isotopes involved. This expectation was confirmed in the measurements taken. All the area monitoring spectra taken around primary and auxiliary systems indicated Co-60 activity. Most monitored locations also indicated the presence of Cs-137 (this may have some practical implications, as is discussed below).

A few smear samples from reactor spaces showed a combination of Co-60 and Cs-137. In one case, only Cs-137 was present. This is reasonable given the low activity in that area and the ratio of Cs-137 to Co-60 on the other smears (see detailed findings). It might also be surmised that the presence of the contamination is due to past spills of system coolant or ion exchange media, rather than the dry release of crud from piping internals.

13.1.7.3 Detailed Findings

Samples from inside the primary coolant system showed the following characteristics. The steam generator water sample contained Cs-137 almost exclusively (Cs-137 concentration was about 1000 times greater than that of Co-60), but contamination on interior surfaces of the steam generator was found to contain only Co-60. This is undoubtedly a result of the chemical form of the contaminants. Co-60 is usually found as an insoluble oxide and tends to deposit on surfaces of reactor systems (forming the common "crud" deposits found in all reactors), whereas Cs-137 is present as a very soluble oxide or hydroxide.

A spill of the coolant would be likely to spread both Co-60 and Cs-137, as the Co-60 is easily removable and would be flushed from surfaces by any significant movement of the water (hence the speculation above that contamination on surfaces in the reactor compartment may be the result of past liquid (or ion exchange media) spills). A spill to the environment (i.e., into a river) would probably behave similarly with respect to the distribution of these nuclides. The Cs-137 would likely remain dissolved in the river water, whereas insoluble components would eventually find their way into sediment.

Tables 13-5 and 13-6 below summarize the area monitoring and sample analysis results.

Table 13-5 Area Monitoring Results

Scan ref. #	Location	Component or system	Nuclides	Exposure rate (µR/h)	Cs-137/ Co-60 exp. rate ratio
M1	Hold Deck, Port passageway	4" piping below deck level	Cs-137 Co-60	0.95 30	0.03
M2	Hold Deck Port passageway	Aft end of passage, effluent piping under deck	Cs-137 Co-60	0.08 1.6	0.05
M3	Hold Deck Port passageway between port charge pumps aft	Small-diameter pipe behind cage chg. pmp. buffer seal system	Cs-137 Co-60	1.4 5.9	0.24
M4	Port Stabilizer Room (Note 1)	6" piping from charging pump buffer seal system	Cs-137 Co-60	12.1 21.6	0.56
M5	Containment upper level	Primary coolant line interface to reactor vessel forward	Co-60	581	N/A
M6	Containment upper level	Primary coolant line interface to reactor vessel aft	Co-60	564	N/A
M7	Containment upper level	Upper pressurizer head, port	Co-60	183	N/A
M8	Containment upper level	Forward upper regen./nonregen. heat exchanger	Cs-137 Co-60	6 242	0.025
M9	Containment 2nd level	Crossover line from upper to lower regen./nonregen. heat exchanger	Cs-137 Co-60	8.5 137	0.062
M10	Containment 3rd level	Main pressurizer leg to primary coolant line, just under pressurizer	Cs-137 Co-60	6.8 156	0.044
M11	Containment 4th level	Check valve adjacent to forward primary coolant line near vessel	Cs-137 Co-60	19 360	0.053
M12	Containment 4th level	Reactor vessel (shield tank wall) forward, just starboard of center	Cs-137 Co-60	11 479	0.023
M13	Containment 1st level	Rx ventilation plenum	Cs-137	18	0.21

Scan ref. #	Location	Component or system	Nuclides	Exposure rate (μR/h)	Cs-137/ Co-60 exp. rate ratio
	(Note 2)	duct, starboard	Co-60	84.5	
M14	Cold Water Chem Lab upper level (originally Radiation Monitoring Room, C-deck level) (Note 2)	Rx ventilation duct	Cs-137 Co-60	0.043 0.25	0.17
M15	Cold Water Chemistry Lab lower level (originally Radiation Sampling Room, D-deck level)	Primary sample sink, sample bulb inside sink hood	Cs-137 Co-60	3.6 242	0.015
M16	Port Charge Pump Room (Note 3)	Between pumps at aft bulkhead	Cs-137 Co-60	-- --	0.096

Notes:

1. Exposure rates estimated.
2. Measurement on ventilation ducts.
3. Measured with high-resolution Ge detector. Ratio taken from peak area data.

Table 13-6 Sample Analysis Results

Ref #	Location/Component	Sample Type	Nuclides	Activity
S1	Starboard steam generator tube sheet	Smear	Co-60	144,300 dpm/100 cm^2
S2	Starboard steam generator interior (average)(Note 1)	Smear	Co-60	22,000 dpm/100 cm^2
W1	Starboard steam generator water	100 ml water	Cs-137 Co-60	1.04E-3 μCi/ml 1.45E-6 μCi/ml
S3	Reactor 3rd level forward at pressurizer (highest)(Note 2)	Smear	Cs-137 Co-60	1200 dpm/100 cm^2 250 dpm/100 cm^2
S4	Reactor 1st level forward Rx head (average)(Note 3)	Smear	Cs-137	350 dpm/100 cm^2

Notes:

(1) Average of four smears, excludes tube sheet.
(2) Composite count of six smears, all activity attributed to one smear.
(3) Composite count of five smears, activity averaged over the total.

13.1.8 Calculation of Total Contamination Inventory

The total contamination inventory for the primary and auxiliary systems was estimated based on the sample data. The contamination inventory is broken into two parts: internal surface contamination and contamination entrained in residual coolant.

13.1.8.1 Surface Contamination

The surface contamination estimate begins with an assessment of the steam generator contamination content. Published industry data indicate that in pressurized-water reactors (PWRs), the majority of coolant-borne corrosion/fission products that are not removed by the chemical volume and control system (CVCS) are deposited in the steam generators. For a reference PWR (Trojan), the generators contain about 85% of the total deposited activation product inventory. The balance of the activity is distributed in various other components based on relative surface area and deposition characteristics of the system/component.

Steam generator activity content was estimated based on the highest contamination level found in the starboard generator. Assumptions for the calculation are as follows:

- The only nuclide of concern for surface contamination is Co-60;
- Smears were taken over a 100-cm^2 area; and,
- The removal factor for smears is 0.1

The estimated internal steam generator surface area was calculated to be 7.2E6 cm^2 and total estimated activity in one generator in curies is calculated 46.8 mCi or 93.6 mCi for both steam generators.

Adjusting for reactor/steam generator surface area ratios and unit layout (2-loop vs. 4-loop), activity distribution assignments were made based on the reference PWR. Associated activity levels were calculated and are summarized in Table 13-7.

Table 13-7 Total Surface Contamination Inventory

System	Activity distribution (%)	Total estimated activity (Ci)
Reactor vessel and internals	5	0.0054*
Steam generators	87	0.0936
Primary coolant system piping	3	0.0032
Auxiliary systems piping	2.3	0.0025
Pressurizer	0.2	0.0002
Other	2.5	0.0027
Totals	100	0.108 or 108 mCi

* Excludes volumetrically distributed activation products in the reactor vessel

Scans and samples confirmed that the primary nuclide deposited on surfaces in reactor systems is Co-60. The total estimated inventory of Co-60 in surface deposits is approximately 100 mCi.

13.1.8.2 Contamination in Residual Coolant

Steam generator hot-leg access was performed to investigate the existence and quantity of water in the primary coolant system beyond the reactor vessel for this purpose. Note that approximately 1500 gallons were found in the primary system. This volume is approximately 15% of the normal operating water volume of the system (approximately 10,000 gallons). Given that the primary and auxiliary were drained to the maximum extent practical in March 1976, the quantity of water present in the generators and lower hot-leg piping was greater than expected. This quantity of water is theorized to have due to draining but not pumping the system "dry." It may also have resulted from the migration of water from the reactor pressure vessel (RPV) lower head during the subsequent 30 years as the ship has been subjected to normal movements caused by sea action, and list/trim adjustments made for towing and drydocking. Smear and water samples were obtained from inside the steam generators. An estimate of the total contamination inventory is made based on samples from the starboard steam generator. The dose rates and contamination levels are listed in Tables 13-8 and 13-9.

Table 13-8 Steam Generator Dose Rates (primary system side)

Dose rates	Starboard steam generator (mR/hour)	Port steam generator (mR/hour)
Outside inner cover seal	32	34
At opening plane	45	N/A
At mid plenum	275	344
At tube sheet	525	812

Table 13-9 Steam Generator Contamination Levels (primary system side)

Contamination levels	Starboard steam generator (dpm/100 cm^2)	Port steam generator (dpm/100 cm^2)
Inside, top of plenum	14,798	22,000
Inside, left of access opening	13,183	6,096
Inside, right/below of access opening	51,682	4,144
Plenum tube sheet	166,730	378,673
Inside surface of SS cover seal	10,211	7,654

The volume of water in primary coolant system was determined by verifying water levels in various points in the system and using this data to calculate the water remaining in the system. The results are listed in Table 13-10.

Table 13-10 Volume of water remaining in the Primary Coolant system

Component	Volume (gallons)
Reactor vessel bottom head	734.3
Cold leg (port and starboard) piping	142.6
Port Steam Generator	138.8
Hot leg (stbd) piping	65.9
Hot Leg (port) piping	0
Total	1435.8

Assuming the activity in the water is uniform throughout the plant and represented by the activity in the steam generator and using a conservative water volume of 1500 gallons (5.68E6 ml), the total estimated activity is:

Cs-137 (1.04E-3 μCi/ml)(5.68E6 ml) = 5910 μCi or 5.91 mCi
Co-60 (1.45E-6 μCi/ml)(5.68E6 ml) = 8.24 μCi

13.1.9 Reactor Pressure Vessel (RPV)

The 2004 analysis determined that the actual dose rate, 7 mR/hour, at the RPV external wall near the core mid-height location, is about an order of magnitude lower than expected. The estimated dose rate, 85 mR/hour, was made using a point source approximation along the centerline of the vessel at mid-core height.

The higher estimated versus measured dose suggested an over prediction of the total RPV curie content in the original analysis. The difference between measured and calculated is likely attributable to one or more of the following factors:

- Over prediction of thermal neutron flux in the core internals;
- Use of high natural cobalt (Co-59) content (0.141%) for analysis (maximum ASTM values); and/or,
- Under prediction of Co-60 gamma shielding/absorption by the heterogeneous arrangement of core internals and structural components that tend to depress neutron flux during normal operation.

In response to the much lower than expected dose rates in the vicinity of the RPV, physical sampling of the RPV outer wall, selected internals, and the primary (neutron) shield tank was conducted to develop an actual radiological profile of the constituent materials.

In 2005, the Curie content and radio isotopic composition of the reactor pressure vessel, internals and primary (neutron) shield tank is determined by extraction of metal samples at selected locations. Using a precision gun-drilling or boring operation, an access hole was extended through the external lead shield, the inner and outer annuli of the primary (neutron) shield tank, the insulation layer, RPV wall and inner weld deposit cladding, and finally through the outer and middle thermal shields surrounding the core volume. Material extraction was achieved by sleeving the drill bits and progressively decreasing the access hole diameter at each component interface. Refined calculations were performed based on the integrated actual reactor power history, actual radiochemical data from reactor components and realistic neutron flux approximations.

Tables 13-11 and 13-12 list the results of total RPV nuclide activation levels based on actual radiochemistry data from the samples, and analysis using the ORIGEN II code for the Part 10 CFR Part 61 analyses. Tables 13-10 and 13-11 correspond to the applicable nuclide locations in Tables 1 and 2 of 10 CFR Part 61.55. The concentration of each radionuclide was averaged over the entire volume of metal in the RPV and internals. As shown, all nuclides are within the Waste Classification Class A limit both individually per isotope and when combined using the sum of the fractions for Class A Waste, which is 0.89. The principle finding of the 2005 analysis is that the reactor pressure vessel and related components are class A radioactive waste material for land disposal purposes. The total activation from Tables 13-10 and 13-11 is 452.2 Curies (Metal Sample Analysis) and 440.8 Curies (ORIGEN II).

Table 13-11 Summary of Radioactivity Present

Nuclide	**Metal Sample Analysis**		**ORIGEN**		**WAC Class A Limit / Ratio***
	Curie	Curies/m^3	Curies	Curies/m^3	Curies/m^3
Ni-59***	4.1	0.3	3.9	0.3	22 / 0.014
Nb-94***	<MDA**	--	<0.0001	--	--
C-14***	<0.01	--	<0.0001	--	--

* Ratio of Curie concentration from metal sample analysis to Class A limit

** Minimum Detectable Activity Level

*** In activated metal

Table 13-12 Summary of Radioactivity Present

Nuclide	**Metal Sample Analysis**		**ORIGEN**		**WAC Class A Limit / Ratio***
	Curie	Curies/m^3	Curies	Curies/m^3	Curies/m^3
Ni-63**	385	30.1	356	27.9	35 / 0.86
Co-60	62	4.9	80	6.3	700 / 0.007
Fe-55	1.1	0.09	0.9	0.07	700 / 1.3E-4

* Ratio of Curie concentration from metal sample analysis to Class A limit

** In activated metal

13.2 Environmental Characterization (HAZMAT) Scoping Survey

The objective of the NSS hazardous materials characterization program was to support MARAD in its decommissioning planning, cost estimating, radiological engineering, and scheduling efforts. To this end, hazardous materials (e.g., PCBs, lead, asbestos, etc.), which potentially may impact the decommissioning activities and/or downstream waste management will be identified. Under this scope, hazardous materials associated with fixed surfaces on the ship were surveyed and identified in both radiological and nonradiological spaces on the vessel. With the exception of lead-based paint testing, the multimedia

samples collected from the non-radiological areas of the ship were not analyzed. Those samples, which were collected, were transferred to MARAD for potential future analysis.

Personnel used existing vessel data, visual surveys, and sample collection/chemical analysis as part of the hazardous material characterization effort. Prior to the sampling effort, personnel reviewed available details of the vessel's infrastructure and operational equipment for potential sources, amounts, and relative hazards of potential contaminants. Target sampling items and locations were indexed and located on vessel schematics.

13.2.1 Asbestos-Containing Material

Using available information and visual surveys, potential asbestos-containing materials (ACM) were identified, indexed, and mapped. This effort took place within both the radiological and non-radiological parts of the ship. Within the radiological spaces, samples of potential ACM were collected, mapped, and photographed. These samples were analyzed by an off-site laboratory (Aerosol Monitoring and Analysis, Lanham, Md.). Most of the samples analyzed from the radiological areas of the vessel contained asbestos (i.e., both Chrysotile and Amosite).

13.2.2 Lead-Based Paint

The lead-based paint (LBP) testing was performed with a Radiation Monitoring Device (RMD) Model LPA-1 X-ray fluorescence analyzer (XRF) to rapidly lead content quantification in paints throughout the vessel. The LPA-1 XRF is capable of achieving a 95% confidence level in readings to a depth of 3/8-inch. Representative locations were analyzed to quantify lead content in real-time using XRF techniques. Excluding calibrations, 523 readings on the accessible painted interior and exterior surfaces of the NSS were collected. Of the 523 readings, 57 were $\geq$1.0 mg/cm2 (the value at which the state of Virginia classifies materials as "lead-containing.").

13.2.3 Liquids

The location of equipment and tanks which potentially contain fuels, lubricants, and coolants were identified and noted on vessel schematics, and an index was compiled. Samples of liquids identified on the ship were collected for material characterization to assist in future decommissioning activities. This effort included both aqueous samples and oils.

Samples collected from the non-radiological areas of the ship include hydraulic oils from the winches and steering gear, and lubricating oils from the boat emergency generator. Liquid samples collected from the radiological area included water and oil from the sump in the lower reactor compartment area, hydraulic oil from containment, and lube oil and hydraulic oil collected from the ship stabilizer compartments.

Oils were analyzed for total halogen content and PCBs, and the water sample was analyzed for volatile organic compounds (VOCs), semivolatile organic compounds (SVOCs), and metals. Analytical results for the liquid samples collected from the radiological areas of the boat were analyzed and summarized in Table 13-13. Halogens and PCBs were detected in the reactor compartment sump oil, control rod drive mechanism hydraulic, and hydraulic oil in the stabilizer compartments. Metals were detected in the reactor compartment sump water. Volumetric estimates of the remaining liquids were not determined.

Table 13-13 Radiological Spaces Liquid Sample Summary

	Sample ID	Units	Reactor Compartment Sump (oil)	Reactor Compartment Sump (water)	Containment (hydraulic oil)	Stabilizer Compart-ments (hydraulic oil)	Stabilizer Compart-ments (lube oil)
Metals							
	Cadmium	mg/L	NA	0.02	NA	NA	NA
	Chromium	mg/L	NA	0.3	NA	NA	NA
	Mercury	mg/L	NA	0.00027	NA	NA	NA
	Lead	mg/L	NA	0.5	NA	NA	NA
PCBs							
	Aroclor 1016	mg/kg	76	NA	1180	28	BQL*
	Aroclor 1260	mg/kg	197	NA	430	12	BQL*
Total halogens		mg/kg	107	NA	242	73	BQL*

* BQL = below the quantification limit.

13.2.4 Polychlorinated Biphenyls (PCBs)

Polychlorinated Biphenyls (PCBs) are a concern for ships of the NSS's vintage. Electrical equipment that potentially contains PCB-containing dielectric and electrical conduit was identified through review of vessel information and visual survey. In addition to the liquid oil samples collected for PCB analysis, power transformers on the ship were inspected to evaluate PCB content.

According to former members of the ship's crew, power transformers on the boat were all dry-type transformers. The vessel was checked for liquid-containing transformers by those involved with the characterization and none were found. However, based on the date of ship construction, it is likely that capacitors in the fluorescent light ballasts present throughout the ship contain small quantities of PCBs. After 1978, these ballasts were no longer manufactured using PCBs. Samples of light ballasts and electrical wiring were not collected for analytical testing as part of the characterization.

Painted surfaces that contain > 50ppm PCBs may not be torch cut since combustion of PCBs is prohibited per 40 CFR 761.50. Alternatively, surfaces suspected or confirmed to contain PCBs must be "cleaned" by mechanically removing the paint at and around the burn line to prevent heating of the paint.

Other non-liquid media may contain PCBs. Examples include: electrical cable, ventilation gaskets, grease, rubber applications such as electrical channel rubber and pipe hanger liners, adhesives, and

caulking/grouting. These items must be handled and disposed of in accordance with 40 CFR 761 et seq.

13.2.5 Mercury

As part of the hazardous materials characterization, thermometers and switches throughout the ship were inspected in an effort to determine the potential presence of mercury-containing materials. Based on the inspection and former members of the ship's crew, no mercury-containing thermometers or switches were documented. Visual observations of the thermometers did not suggest that any thermometers contained mercury. Based on the year of construction and years of operation, some fluorescent light bulbs on the vessel may contain mercury.

13.3 Updates to Known Radiological Conditions

Updates to known radiological conditions are provided to the NRC in the Annual Report per the Technical Specifications. Survey results are available for review at the ship.

13.4 References

1 Nuclear Ship *SAVANNAH* Reactor Pressure Vessel Drilling, Sampling and Radiochemical Analysis Project Report, Revision 1, dated January 30, 2006.

2. NSS Radiological and Non-Radiological Spaces Characterization Survey Report, Revision 0, Sept 22, 2005.

3. N.S. *SAVANNAH* Primary and Secondary Systems Water Level Determination, Revision 0, June 15, 2005.

14 ACCIDENT ANALYSIS

Chapter 14 is completely rewritten starting in Revision IV of the FSAR to include credible accidents for the licensed activities following permanent defueling. These accidents replace the operating accidents discussed in Revision III.

14.1 Overview

This chapter analyzes a potential event which could be postulated to occur during licensed activities and result in the release of radioactive materials. This event includes those with the potential for airborne radioactive releases during decommissioning.

The possession-only license allows the following activities:

NS-1 License condition C(2) states "The Licensee shall not dismantle or dispose of the facility without prior approval of the Commission." The following Technical Specifications further define and limit activities that can be performed on the NSS:

- Technical Specification 1.0 limits the ship to being in a state of protective storage;
- Technical Specification 2.1 allows only incidental amounts of liquid to be generated in the unlikely event decontamination is found necessary in controlled areas;
- Technical Specification 2.2 limits radioactive airborne particulate releases to only those that may occur due to maintenance requirements such as cutting and welding of contaminated components.
- Technical Specification 2.4 limits generation of solid radioactive waste to general decontamination of controlled areas, ship surveillance, and entry into controlled areas.

The material handling accident, described in 14.4, is a bounding event based on the limited activities that can be conducted on the NSS.

Other than activities allowed by the Technical Specifications and those associated with inspections to scope and plan decommissioning, no significant decommissioning activities will be performed until the operating license is amended to allow them. As a result, there are no licensed activities that will create the potential for accidental releases that could cause doses at the site boundary to be more than a small fraction of the EPA PAGs.

Because no irradiated fuel has been on board the NSS since September 29, 1971, there have been no radioactive noble gases or radioiodines available for release from the facility after that date. This has precluded the possibility of accidental offsite radiological releases that could approach the protective action guidelines (PAGs) for the skin and thyroid. As a result, the PAG for total effective dose equivalent (TEDE) is the limiting criteria for decommissioning.

Prior to performing significant decommissioning activities, this chapter will be reviewed to ensure the described accidents are bounding. If not, the appropriate analysis will be performed and updated to analyze a number of potential events which could be postulated to occur during licensed activities and result in the release of radioactive materials. These events include those with the potential for liquid and/or airborne radioactive releases during decommissioning.

The analyses of these events will use conservative approaches in treating the source terms, as well as in the methods of calculation. To the extent applicable, these analyses are consistent with approaches used in the NRC's examination of postulated accidents during the decommissioning of the Reference PWR

(EPA 400-R-92-001, Manual of Protective Actions Guides and Protective Actions for Nuclear Incidents, 1992).

MARAD will analyze the decommissioning activities in the PSDAR to ensure that they will perform licensed activities in a manner that keeps offsite doses from even the most unlikely events at a small fraction of the EPA PAGs provides for the protection of the health and safety of the public without the need for protective actions. The accident analyses will demonstrate that no adverse public health and safety or environmental impacts are expected from accidents that might occur during decommissioning operations.

14.2 Radiation Exposures during Licensed Activities

14.2.1 Offsite and Unrestricted Area Exposure

The Maritime Administration (MARAD) continues to conduct semi-annual environmental sampling and surveillance monitoring program of water samples and bottom sediment adjacent to the ship to monitor radiation and radioactive materials in the environment. The information obtained is available to determine the effects of the N.S. *SAVANNAH* (NSS), if any, on the environment and the public. The results to date indicate that the NSS has not had a significant radiological impact on the environment and the public.

14.2.2 Occupational Radiation Exposure

Occupational radiation exposure will be considered from both the standpoint of exposure resulting from performance of licensed activities including decommissioning and that which could result from exposure during one of the postulated accident scenarios.

14.2.3 Radiation Exposure from Radwaste Transportation

As a result of current license limitations, only a small amount of radwaste is expected to be generated. NUREG-0586, at Table 4.3-2 estimates that the dose attributable to radwaste transportation is 1.7 man-Rem for a power reactor in a 30 year SAFSTOR condition. The estimate in NUREG-0586 is based on an assumed 18,340 cubic meters of waste (Table 4.4-1). The NSS is expected to generate only a small fraction of this volume.

14.3 Protective Action Guidelines (PAGs)

The EPA has established protective action guidelines (PAGs) that specify the potential off-site dose levels at which actions should be taken to protect the health and safety of the public. The EPA PAGs are limiting values based on the sum of the effective dose equivalent resulting from exposure to external sources and the committed effective dose equivalent incurred from the significant inhalation pathways during the early phase of an event.

The EPA PAG limits are:

	EPA PAGs (mR)
Total Whole Body (TEDE)	1000
Thyroid Committed Dose Equivalent (CEDE)	5000
Skin (CDE)	50,000

Since there is no irradiated fuel stored on board the NSS, there are no radioactive noble gases or radioiodine is available for release from the site. This precludes accidental off-site radiological releases

that could approach the PAGs for the skin and thyroid. As a result, the PAG for TEDE is the limiting criterion for decommissioning activities on board the NSS.

14.4 Materials Handling Accident

A radiological accident scenario was developed with the help of Argonne National Laboratory (ANL). This accident scenario assumes that a B-25 Box containing radioactive waste (radwaste) is dropped from a crane during removal from the NSS. This was considered to be the worst-case material handling accident, since it conservatively assumes that all the contamination listed in Table 13-7 is packaged in the radwaste container. In addition, this event is also bounding because it assumes an activity has taken place that is not allowed by the current License and Technical Specifications.

Per Table 13-7, the contamination is assumed to be 108 mCi. Of the total, 100 mCi is assumed to be Co-60 and 8 mCi is Cs-137. Although the Cs-137 is in residual water in the reactor internals, it was assumed that the Cs-137 is also surface contamination as is the Co-60 at the time of packaging and transport. For radwaste handling purposes, any internal water is assumed to have mitigated at time of shipment and disposal. No credit for packaging was given when selecting a release fraction because of the class of packaging and the height of the hypothetical fall. An aerosolized release fraction of 0.001 and a respirable fraction of 1.0 were used in the calculations. These values represent the suspension of powder-like surface contamination by shock-vibration as taken from the DOE handbook on airborne release fractions from non-nuclear facilities (DOE-HDBK-3010-94). These values were selected as the best match to the accident scenario and are slightly lower than estimates from releases due to free-fall spills of powders.

Consistent with NRC Regulatory Guide 1.145, estimates of dose to a receptor located 100 m downwind of a potential accident were performed using a Gaussian plume model with the Pasquill-Gifford coefficients. The RISKIND code was used to estimate the dose. Because the location of the decommissioning work on the N.S. *SAVANNAH* has not yet been determined, site-specific weather conditions could not be used. Since the time of day and year that a potential accident could occur cannot be known, two sets of calculations were performed using two different weather conditions to give some idea of the uncertainty involved. Neutral weather conditions occur approximately 50% of the time in the U.S. These conditions were approximated with the calculations using a wind speed of 4 m/s with the D stability category. Stable weather conditions occur much less frequently, but result in higher contaminant concentrations near the release. These conditions were approximated using a wind speed of 1 m/s with the F stability category. This latter condition occurs less than 10% of the time in the U.S.

A short-term dose was calculated that assumed the receptor is outside, unshielded during and after the plume passage. Exposure pathways evaluated include inhalation and external exposure (from the passing plume and ground deposited contamination). A 2-hr exposure time was assumed, but the dose from inhalation of the passing plume dominates the results. A long-term dose was calculated that assumed that no cleanup was performed and that the receptor is outside, unshielded for one-third of the year (e.g. a dockworker). Long-term exposure pathways evaluated include inhalation and external exposure to resuspended contamination and external exposure from contamination on the ground. Exposure from contamination on the ground dominates the long-term estimated dose.

For neutral weather conditions:

- The estimated short-term dose at 100 m was 0.0096 mR.
- The estimated long-term dose at 100 m was 0.15 mR.

For stable weather conditions:

- The estimated short-term dose at 100 m was 0.11 mR.

- The estimated long-term dose at 100 m was 1.6 mR.

14.5 Summary

During the period where the NSS has a possession-only license and significant decommissioning activities are not permitted, there are no significant radiological consequences to the general public from performance of licensed activities.