GE Nuclear Energy

Rev. 4
March 1997

ABWR Design Control Document

Design Control Document Table Of Contents

Effective Pages of the Design Control Document ..... Volume 1
Introduction to the Design Control Document ..... Volume 1
Tier 1, Section 1.0 Introduction ..... Volume 1
Tier 1, Section 2.0 Certified Design Material for ABWR Systems ..... Volume 1
Tier 1, Section 3.0 Additional Certified Design Material ..... Volume 2
Tier 1, Section 4.0 Interface Requirements ..... Volume 2
Tier 1, Section 5.0 Site Parameters ..... Volume 2
Tier 2, Chapter 1 Introduction and General Plant Description of Plant ..... Volume 3
Tier 2, Chapter 2 Site Characteristics ..... Volume 3
Tier 2, Chapter 3 Design of Structures, Conponents, Equipment and Systems ..... Volumes 4,5,6
Tier 2, Chapter 4 Reactor ..... Volume 7
Tier 2, Chapter 5 Reactor Coolant System and Connected Systems ..... Volume 7
Tier 2, Chapter 6 Engineered Safety Features ..... Volume 8
Tier 2, Chapter 7 Instrumentation and Control Systems ..... Volume 9
Tier 2, Chapter 8 Electric Power ..... Volume 9
Tier 2, Chapter 9 Auxiliary Systems ..... Volumes 10, 11, 12
Tier 2, Chapter 10 Steam and Power Conversion System ..... Volume 13
Tier 2, Chapter 11 Radioactive Waste Management ..... Volume 13
Tier 2, Chapter 12 Radiation Protection ..... Volume 13
Tier 2, Chapter 13 Conduct of Operations ..... Volume 14
Tier 2, Chapter 14 Intial Test Program ..... Volume 14
Tier 2, Chapter 15 Accident and Analysis ..... Volume 15
Tier 2, Chapter 16 Technical Specifications ..... Volumes 16, 17, 18, 19
Tier 2, Chapter 17 Quality Assurance ..... Volume 20
Tier 2, Chapter 18 Human Factors Engineering ..... Volume 20
Tier 2, Chapter 19 Response to Severe Accident Policy Statement ..... Volumes 21, 22, 23
Tier 2, Chapter 20 Question and Resonse Guide ..... Volumes 24, 25
Tier 2, Chapter 21 Engineering Drawings ..... Volumes 26 through 31

Chapter 9
Table of Contents

List of Tables....9.0-xxv

List of Figures 9.0-xxix

9.0 Auxiliary Systems 9.1-1

9.1 Fuel Storage and Handling 9.1-1
9.1.1 New-Fuel Storage 9.1-5
9.1.2 Spent-Fuel Storage 9.1-5
9.1.3 Fuel Pool Cooling and Cleanup System 9.1-10
9.1.4 Light Load Handling System (Related to Refueling) 9.1-16
9.1.5 Overhead Heavy Load Handling System (OHLH) 9.1-38
9.1.6 COL License Information 9.1-46

9.2 Water Systems 9.2-1
9.2.1 Station Service Water System 9.2-1
9.2.2 Closed Cooling Water System 9.2-1
9.2.3 Demineralized Water Makeup System 9.2-1
9.2.4 Potable and Sanitary Water System 9.2-1
9.2.5 Ultimate Heat Sink 9.2-5
9.2.6 Condensate Storage Facilities and Distribution System 9.2-11
9.2.7 Plant Chilled Water System 9.2-11
9.2.8 Makeup Water (MWP) Preparation System 9.2-11
9.2.9 Makeup Water Condensate System 9.2-15
9.2.10 Makeup Water Purified System 9.2-18
9.2.11 Reactor Building Cooling Water System 9.2-20
9.2.12 HVAC Normal Cooling Water System 9.2-28
9.2.13 HVAC Emergency Cooling Water System 9.2-30
9.2.14 Turbine Building Cooling Water System 9.2-34
9.2.15 Reactor Service Water System 9.2-37
9.2.16 Turbine Service Water System 9.2-42
9.2.17 COL License Information 9.2-45

9.3 Process Auxiliaries 9.3-1
9.3.1 Compressed Air System 9.3-1
9.3.2 Process and Post-Accident Sampling System 9.3-1
9.3.3 Non-Radioactive Drain System 9.3-8
9.3.4 Chemical and Volume Control System (PWR) 9.3-10
9.3.5 Standby Liquid Control System 9.3-10
9.3.6 Instrument Air System 9.3-17
9.3.7 Service Air System 9.3-20
9.3.8 Radioactive Drain Transfer System 9.3-22
9.3.9 Hydrogen Water Chemistry System 9.9-28
9.3.10 Oxygen Injection System 9.3-31
9.3.11 Zinc Injection System 9.3-32
9.3.12 COL License Information 9.3-33

9.4 Air Conditioning, Heating, Cooling and Ventilation Systems 9.4-1

Table of Contents (Continued)

9.4.1 Control Building HVAC 9.4-1
9.4.2 Spent Fuel Pool Area HVAC System 9.4-9
9.4.3 Auxiliary Area HVAC System 9.4-9
9.4.4 Turbine Island HVAC System 9.4-9
9.4.5 Reactor Building HVAC System 9.4-15
9.4.6 Radwaste Building HVAC System 9.4-31
9.4.7 R/B Safety-Related Diesel Generator HVAC System 9.4-34
9.4.8 Service Building HVAC System 9.4-34
9.4.9 Drywell Cooling System 9.4-37
9.4.10 COL License Information 9.4-39

9.5 Other Auxiliary Systems 9.5-1
9.5.1 Fire Protection System 9.5-1
9.5.2 Communication Systems 9.5-29
9.5.3 Lighting and Servicing Power Supply System 9.5-34
9.5.4 Diesel-Generator Fuel Oil Storage and Transfer System 9.5-44
9.5.5 Diesel-Generator Jacket Cooling Water System 9.5-49
9.5.6 Diesel-Generator Starting Air System 9.5-51
9.5.7 Diesel Generator Lubrication System 9.5-53
9.5.8 Diesel - Generator Combustion Air Intake and Exhaust System 9.5-55
9.5.9 Suppression Pool Cleanup System 9.5-57
9.5.10 Motor Generator Set 9.5-59
9.5.11 Combustion Turbine/Generator 9.5-61
9.5.12 Lower Drywell Flooder 9.5-65
9.5.13 COL License Information 9.5-70
9.5.14 Reference 9.5-76

Appendices

9A Fire Hazard Analysis 9A.1-1

9B Summary of Analysis Supporting Fire Protection Design Requirements 9B-1

9C Regulatory Guide 1.52, Section C, Compliance Assessment 9C-1

9D SRP 6.5.1, Table 6.5.1-1 Compliance Assessment 9D-1

Chapter 9
List of Tables

Table 9.1-1 Not Used 9.1-48

Table 9.1-2 Fuel Servicing Equipment 9.1-48

Table 9.1-3 Reactor Vessel Servicing Equipment 9.1-49

Table 9.1-4 Under-Reactor Vessel Servicing Equipment and Tools 9.1-49

Table 9.1-5 Tools and Servicing Equipment 9.1-50

Table 9.1-6 Reference Codes and Standards 9.1-51

Table 9.1-7 Heavy Load Equipment Used to Handle Light Loads and Related Refueling Handling Tasks 9.1-52

Table 9.1-8 Heavy Load Operations 9.1-53

Table 9.1-9 Legend for In-Plant Locations/Elevations 9.1-57

Table 9.1-10 Single-Failure-Proof Cranes 9.1-57

Table 9.1-11 Fuel Pool Cooling Heat Exchanger and Performance Data 9.1-58

Table 9.1-12 RHR-FPC Joint Heat Removal Performance Table (150 Hours Following Shutdown) 9.1-58

Table 9.2-1 Users of Makeup Water-Condensate 9.2-47

Table 9.2-2 Users of Makeup Water-Purified 9.2-47

Table 9.2-2a Water Quality Characteristics for the Makeup Water Purified System 9.2-48

Table 9.2-3 Capacity Requirements for Condensate Storage Tank 9.2-49

Table 9.2-4a Reactor Building Cooling Water Division A 9.2-50

Table 9.2-4b Reactor Building Cooling Water Division B 9.2-51

Table 9.2-4c Reactor Building Cooling Water Division C 9.2-52

Table 9.2-4d Design Characteristics for Reactor Building Cooling Water System Components 9.2-53

Table 9.2-5a Reactor Building Cooling Water Active Failure Analysis 9.2-54

Table 9.2-5b Reactor Building Cooling Water System Passive Failure Analysis 9.2-55

Table 9.2-6 HVAC Normal Cooling Water System Component Description 9.2-56

Table 9.2-7 HVAC Normal Cooling Water Loads 9.2-57

List of Tables (Continued)

Table 9.2-8 HECW System Component Description 9.2-58

Table 9.2-9 HVAC Emergency Cooling Water System Heat Loads..... 9.2-59

Table 9.2-10 HVAC Emergency Cooling Water System Active Failure Analysis..... 9.2-60

Table 9.2-11 Turbine Island Auxiliary Equipment 9.2-60

Table 9.2-12 Not Used 9.2-61

Table 9.2-13 Reactor Service Water System (Interface Requirements) 9.2-61

Table 9.2-14 Potable and Sanitary Water System Components (Interface Requirements) .. 9.2-63

Table 9.2-15 Makeup Water Preparation System Component (Interface Requirements) 9.2-64

Table 9.2-16 Turbine Service Water System (Interface Requirement) 9.2-66

Table 9.3-1 Standby Liquid Control System Operating Pressure/Temperature Conditions..... 9.3-34

Table 9.3-2 Water Quality Instrumentation..... 9.3-36

Table 9.3-3 Service Air Consumption During Normal Plant Operation 9.3-40

Table 9.3-4 Instrument Air Consumption During Normal Plant Operation (Response to Question 430.215) 9.3-40

Table 9.4-1 Drywell Cooling System Components 9.4-40

Table 9.4-2 Drywell Cooling System Heat Loads..... 9.4-41

Table 9.4-3 HVAC Flow Rates (Response to Question 430.243) 9.4-42

Table 9.4-4 HVAC System Component Descriptions—Safety-Related Heating/Cooling Coils (Response to Question 430.243) 9.4-43

Table 9.4-4a HVAC System Component Descriptions—Safety-Related Fans..... 9.4-44

Table 9.4-4b HVAC System Component Descriptions—Safety-Related Filters 9.4-45

Table 9.4-4c HVAC System Component Descriptions—Emergency Use Adsorption Units (Safety-Related) 9.4-45

Table 9.4-4d Not Used 9.4-46

Table 9.4-4e HVAC System Component Descriptions—Safety-Related Fan Coil Units 9.4-46

Table 9.4-4f HVAC System Component Descriptions—Non-Safety-Related Heating/Cooling Coils..... 9.4-47

List of Tables (Continued)

Table 9.4-4g HVAC System Component Descriptions—Non-Safety-Related Fans 9.4-47

Table 9.4-4h HVAC System Component Descriptions—Non-Safety-Related Filters..... 9.4-47

Table 9.4-4i HVAC System Component Descriptions—Non-Safety-Related Air Handling Units 9.4-48

Table 9.4-5 Turbine Building and Electrical Building HVAC System—Non-Safety-Related Equipment List 9.4-49

Table 9.5-1 Normal and/or Standby Lighting (Non-Class 1E AC Power Supply) 9.5-77

Table 9.5-2 Lighting and Power Sources 9.5-78

Table 9.5-3 Standby Lighting 9.5-78

Table 9.5-4 DC Emergency Lighting (Class 1E DC Power Supply) 9.5-79

Table 9.5-5 Summary of Automatic Fire Suppression Systems..... 9.5-80

Table 9A.2-1 Core Cooling.....9A.2-8

Table 9A.5-1 Redundant Instrumentation or Equipment in Same Fire Area 9A.5-18

Table 9A.5-2 Summary of the Reactor Building Special Cases.....9A.5-19

Table 9A.6-1 Fire Hazard Analysis, Equipment Data Base — Sorted by MPL Number (Superceded by Table 9A.6-2) 9A.6-5

Table 9A.6-2 Fire Hazard Analysis Equipment Database Sorted by Room — Reactor Building.....9A.6-6

Table 9A.6-3 Fire Hazard Analysis Equipment Data Base — Sorted by Room — Control Building.....9A.6-96

Table 9A.6-4 Fire Hazard Analysis Equipment Database—Sorted by Room—Turbine Building.....9A.6-106

Table 9B-1 Estimated Fire Severity for Offices and Light Commercial Occupancies.....9B-12

Table 9B-2 Fire Severity Expected by Occupancy 9B-13

Table 9B-3 Cable Type and Configuration for Ul Tests.....9B-14

Table 9B-4 Summary of Burning Rate Calculations.....9B-14

Chapter 9
List of Figures

Figure 9.1-1 Fuel Pool Cooling and Cleanup System P&ID (Sheets 1–3) 9.1-59
Figure 9.1-2 Fuel Pool Cooling and Cleanup System PFD (Sheets 1–2) 9.1-59
Figure 9.1-3 Fuel Preparation Machine Shown Installed in Facsimile Fuel Pool..... 9.1-60
Figure 9.1-4 New-Fuel Inspection Stand 9.1-61
Figure 9.1-5 Channel Bolt Wrench 9.1-62
Figure 9.1-6 Channel-Handling Tool..... 9.1-63
Figure 9.1-7 Fuel Pool Vacuum Sipper 9.1-64
Figure 9.1-8 General-Purpose Grapple 9.1-65
Figure 9.1-9 Not Used 9.1-66
Figure 9.1-10 Jib Crane Channel-Handling Boom..... 9.1-67
Figure 9.1-11 Fuel Assembly Sampler 9.1-68
Figure 9.1-12 Plant Refueling and Servicing Sequence 9.1-69
Figure 9.1-13 Simplified Section of Refueling Facilites 9.1-70
Figure 9.1-14 Simplified Section of New-Fuel Handling Facilities..... 9.1-71
Figure 9.2-1 Reactor Building Cooling Water System P&ID (Sheets 1–9) 9.2-67
Figure 9.2-1a Not Used 9.2-67
Figure 9.2-2 HVAC Normal Cooling Water System P&ID 9.2-67
Figure 9.2-3 HVAC Emergency Cooling Water System P&ID (Sheets 1–3) 9.2-67
Figure 9.2-4 Makeup Water (Condensate) System P&ID 9.2-67
Figure 9.2-5 Makeup Water (Purified) System P&ID (Sheets 1–3)..... 9.2-67
Figure 9.2-6a Turbine Building Cooling Water System Diagram 9.2-68
Figure 9.2-6b Turbine Building Cooling Water System Diagram 9.2-69
Figure 9.2-6c Turbine Building Cooling Water System Diagram 9.2-70
Figure 9.2-7 Reactor Service Water System P&ID (Sheets 1–3) 9.2-71
Figure 9.2-8 Turbine Building Service Water System 9.2-72
Figure 9.2-9 Potable and Sanitary Water System 9.2-73

List of Figures (Continued)

Figure 9.2-10 Makeup Water Preparation System 9.2-74
Figure 9.3-1 Standby Liquid Control System P&ID 9.3-41
Figure 9.3-1a Standby Liquid Control System P&ID 9.3-41
Figure 9.3-2 Sodium Pentaborate Volume Concentration Requirements 9.3-42
Figure 9.3-3 Saturation Temperature of Sodium Pentaborate Solution 9.3-43
Figure 9.3-4 Sample Probe 9.3-44
Figure 9.3-5 Sample Probe 9.3-45
Figure 9.3-6 Instrument Air System P&ID (Sheets 1–2) 9.3-46
Figure 9.3-7 Service Air System P&ID (Sheets 1–2) 9.3-46
Figure 9.3-8 Hydrogen Water Chemistry System 9.3-47
Figure 9.3-9 Divisional Radioactive Floor Drains 9.3-48
Figure 9.4-1 Control Building HVAC PFD (Sheets 1-5) 9.4-53
Figure 9.4-2a Turbine Building HVAC System Air Flow Diagram 9.4-53
Figure 9.4-2b Turbine Building HVAC System Control Diagram (Sheets 1-2) 9.4-53
Figure 9.4-2c Electrical Building HVAC System Diagram 9.4-54
Figure 9.4-3 Secondary Containment HVAC System (Sheets 1-3) 9.4-55
Figure 9.4-4 R/B Safety-Related Electrical Equipment HVAC System (Sheets 1-3) 9.4-55
Figure 9.4-5 Reactor Internal Pump HVAC System 9.4-55
Figure 9.4-6 Not Used 9.4-55
Figure 9.4-7 Not Used 9.4-55
Figure 9.4-8 Drywell Cooling System P&ID 9.4-55
Figure 9.4-9 Drywell Heat Load Area Drawing 9.4-56
Figure 9.4-10 Radwaste Building HVAC (Sheets 1-3) 9.4-57
Figure 9.5-1 Suppression Pool Cleanup System P&ID 9.5-82
Figure 9.5-2 Outline — Telephonic Communication Systems 9.5-83
Figure 9.5-3 Lower Drywell Flooder System Arrangement/Configuration 9.5-84

List of Figures (Continued)

Figure 9.5-4 Fire Protection Water Supply System 9.5-85
Figure 9.5-5 Fire Protection Yard Main Piping 9.5-87
Figure 9.5-6 Standby Diesel Generator Fuel Oil and Intake and Exhaust System 9.5-89
Figure 9.5-7 Standby Diesel Generator Jacket Cooling Water System 9.5-89
Figure 9.5-8 Standby Diesel Generator Starting Air System 9.5-89
Figure 9.5-9 Standby Diesel Generator Lubricating Oil System 9.5-89
Figure 9A.4-1 Reactor Building Fire Protection at El. -8200 mm 9A.4-501
Figure 9A.4-2 Reactor Building Fire Protection at El. -1700 mm 9A.4-501
Figure 9A.4-3 Reactor Building Fire Protection at El. 4800/8500 mm 9A.4-501
Figure 9A.4-4 Reactor Building Fire Protection at El. 12300 mm 9A.4-501
Figure 9A.4-5 Reactor Building Fire Protection at El. 18100 mm 9A.4-501
Figure 9A.4-6 Reactor Building Fire Protection at El. 23500 mm 9A.4-501
Figure 9A.4-7 Reactor Building Fire Protection at El. 27200 mm 9A.4-501
Figure 9A.4-8 Reactor Building Fire Protection at El. 31700/38200 mm 9A.4-501
Figure 9A.4-9 Reactor Building Fire Protection at Section A-A 9A.4-501
Figure 9A.4-10 Reactor Building Fire Protection at Section B-B 9A.4-501
Figure 9A.4-11 Control Building Fire Protection, Section B-B 9A.4-501
Figure 9A.4-12 Control Building Fire Protection at El. -8200 mm 9A.4-501
Figure 9A.4-13 Control Building Fire Protection at El. -2150 mm 9A.4-501
Figure 9A.4-14 Control Building Fire Protection at El. 3500 mm 9A.4-501
Figure 9A.4-15 Control Building Fire Protection at El. 7900 mm 9A.4-501
Figure 9A.4-16 Control Building Fire Protection at El. 12300 mm 9A.4-501
Figure 9A.4-16a Control Building Fire Protection at El. 17150 mm 9A.4-501
Figure 9A.4-16b Control Building Fire Protection at El. 21600 mm 9A.4-501
Figure 9A.4-17 Turbine Building Fire Protection, Section A-A 9A.4-501
Figure 9A.4-18 Turbine Building Fire Protection at El. 5300 mm 9A.4-501

List of Figures (Continued)

Figure 9A.4-19 Turbine Building Fire Protection at El. 12300 mm 9A.4-501

Figure 9A.4-20 Turbine Building Fire Protection at El. 20300 mm 9A.4-501

Figure 9A.4-21 Turbine Building Fire Protection at El. 30300 mm 9A.4-501

Figure 9A.4-22 Service Building Fire Protection, Section B-B 9A.4-501

Figure 9A.4-23 Service Building Fire Protection at El –7100 mm 9A.4-502

Figure 9A.4-24 Service Building Fire Protection at El –1450 mm 9A.4-502

Figure 9A.4-25 Service Building Fire Protection at El 2950 mm 9A.4-502

Figure 9A.4-26 Service Building Fire Protection at El 7350 mm 9A.4-502

Figure 9A.4-27 Service Building Fire Protection at El 11750 mm 9A.4-502

Figure 9A.4-28 Radwaste Building Fire Protection, Section A-A 9A.4-502

Figure 9A.4-29 Radwaste Building Fire Protection at El –1500 mm 9A.4-502

Figure 9A.4-30 Radwaste Building Fire Protection at El 4800 mm.....9A.4-502

Figure 9A.4-31 Radwaste Building Fire Protection at El 12300 mm.....9A.4-502

Figure 9A.4-32 Radwaste Building Fire Protection at El 21000 mm.....9A.4-502

Figure 9A.5-1 Typical RPS Contact Interface Turbine Building to Control Building.....9A.5-27

Figure 9A.5-2 Typical Electrical Equipment Connection Block Diagrams of Special Cases.....9A.5-28

Figure 9B-1 Possible Classification of Building Contents for Fire Severity and Duration .9B-15

9.0 Auxiliary Systems

9.1 Fuel Storage and Handling

The new-fuel storage vault stores a 40% core load of new fuel assemblies. The fuel is stored in the new-fuel storage racks in the vault, which is located as close as practicable to the spent-fuel storage pool work area to facilitate handling during fuel preparation. The new-fuel inspection stand is close to the new-fuel storage vault to minimize fuel transport distance.

Spent fuel removed from the reactor vessel must be stored underwater while awaiting disposition. Spent-fuel storage racks, which are used for this purpose, are located at the bottom of the fuel storage pool under sufficient water to provide radiological shielding. This pool water is processed through the Fuel Pool Cooling and Cleanup System (FPC) to provide cooling to the spent fuel in storage and for maintenance of fuel pool water quality. The spent-fuel pool storage capacity is 270% of the reactor core.

The new-fuel and spent-fuel storage racks are the same high density design. The new-fuel racks can be used for either dry or submerged storage of fuel. The design of the new-fuel racks will be described. Information on the spent-fuel racks will only be presented when the design is different.

9.1.1 New-Fuel Storage

9.1.1.1 Design Bases

9.1.1.1.1 Nuclear Design

A full array of loaded new-fuel racks is designed to be subcritical, by at least 5% Δk.

(1) Monte Carlo techniques are employed in the calculations performed to assure that k_{eff} does not exceed 0.95 under all normal and abnormal conditions.

(2) The assumption is made that the storage array is infinite in all directions. Since no credit is taken for neutron leakage, the values reported as effective neutron multiplication factors are, in reality, infinite neutron multiplication factors.

(3) The biases between the calculated results and experimental results, as well as the uncertainty involved in the calculations, are taken into account as part of the calculational procedure to assure that the specific k_{eff} limit is met.

The new-fuel storage racks are purchased equipment. The purchase specification for these racks will require the vendor to provide the information requested in Question 430.180 on criticality analysis for the inadvertent placement of a fuel assembly in other than prescribed locations. See Subsection 9.1.6 for COL license information requirements.

9.1.1.1.2 Storage Design

The new-fuel storage racks provided in the new-fuel storage vault provide storage for 40% of one full core fuel load.

9.1.1.1.3 Mechanical and Structural Design

See Subsection 9.1.2.1.3.

9.1.1.1.4 Thermal-Hydraulic Design

See Subsection 9.1.2.1.4.

9.1.1.1.5 Material Considerations

See Subsection 9.1.2.1.5.

9.1.1.1.6 Dynamic and Impact Analysis

The new-fuel storage racks are purchased equipment. The purchase specification for the new-fuel storage racks will require the vendor to perform confirmatory dynamic analyses. The SSE input excitation for these analyses will utilize the horizontal and vertical response spectra provided in Subsection 3A.10.2.

Vertical impact analysis is required because the fuel assembly is held in the storage rack by its own weight without any mechanical holddown devices. Therefore, when the downward acceleration of the storage rack exceeds 1g, contact between the fuel assembly and the storage rack is lost. Horizontal impact analysis is required because a clearance exists between the fuel assembly and the storage rack walls.

See Subsection 9.1.6.2 for COL license information requirements.

9.1.1.1.7 Not Used

9.1.1.2 Facilities Description (New-Fuel Storage)

(1) The new-fuel storage vault is located on the refueling floor of the Reactor Building (R/B) (see Figure 1.2-12).

(2) The R/B, a Seismic Category I building, protects the new fuel from seismic events and externally generated missiles. There are no non-seismic systems, high or moderate energy pipes, or rotating machinery located in the vicinity of the new-fuel storage vault.

(3) The R/B HVAC system monitors the building exhausts for radioactivity. If radioactivity is encountered, the system is isolated and the SGTS starts operation. This prevents the possible release of radioactivity from any fuel handling accident.

(4) The new-fuel storage racks are top-entry racks designed to preclude the possibility of criticality under normal and abnormal conditions. The upper tieplate of the fuel element rests against the module to provide lateral support. The lower tieplate sits in the bottom of the rack, which supports the weight of the fuel.

(5) The rack arrangement is designed to prevent accidental insertion of fuel assemblies or bundles between adjacent racks. The storage rack is designed to provide accessibility to the fuel bail for grappling purposes.

(6) The floor of the new-fuel storage vault is sloped to a drain located at the low point. This drain removes any water that may be accidentally and unknowingly introduced into the vault. The drain is part of the floor drain subsystem of the Liquid Radwaste System.

(7) The radiation monitoring equipment for the new-fuel storage areas is described in Subsection 12.3.4.

9.1.1.3 Safety Evaluation

9.1.1.3.1 Criticality Control

The design of the new-fuel storage racks provides for an effective multiplication factor (k_{eff}) for both normal and abnormal storage conditions equal to or less than 0.95 in the new-fuel storage racks. To ensure that design criteria are met, the following normal and abnormal new-fuel storage conditions were analyzed:

(1) Normal positioning in the new fuel array

(2) Eccentric positioning in the new fuel array

The new-fuel storage area will accommodate fuel ($k_{inf} < 1.35$ at 20°C in standard core geometry) with no safety implications.

9.1.1.3.2 Structural Design

(1) The new-fuel vault contains one or more fuel storage racks which provides storage for fuel a maximum of 40% of one full core fuel load.

(2) The new-fuel storage racks are designed to be freestanding (i.e., no supports above the base). This means that the support structure also provides the required dynamic stability.

(3) The racks include individual solid tube storage compartments which provide lateral restraints over the entire length of the fuel assembly.

(4) The weight of the fuel assembly or bundle is supported axially by the rack lower support.

(5) The racks are fabricated from materials used for construction, in accordance with the latest applicable ASTM specifications.

(6) Lead-in guides at the top of the storage spaces provide guidance of the fuel during insertion.

(7) The racks are designed to withstand, while maintaining the nuclear safety design basis, the impact force generated by the vertical free-fall drop of a fuel assembly from a height of 1.8 meters.

(8) The rack is designed to withstand a pullup force of 17.79 kN and a horizontal force of 4.45 kN.

(9) The new-fuel storage racks require no periodic special testing or inspection for nuclear safety purposes.

9.1.1.3.3 Protection Features of the New-Fuel Storage Facilities

The new-fuel storage vault is housed in the Reactor Building. The vault and Reactor Buildings are Seismic Category I, and are designed to withstand natural phenomena such as tornadoes, tornado missiles, floods and high winds. Fire protection features are described in Subsection 9.5.1 and Appendix 9A.

Procedural fuel-handling requirements and equipment design dictate that no more than one bundle at a time can be handled over the storage racks and at a maximum height of 1.8m above the upper rack. Therefore, the racks cannot be displaced in a manner causing critical spacing as a result of impact from a falling object.

The auxiliary hoist on the Reactor Building crane can traverse the full length of the refueling floor. This hoist is used to move new fuel from the entry point into the Reactor Building, up the main equipment hatch to the refueling floor and from there to the new-fuel storage vault. This hoist can move fuel to the new-fuel inspection stand and rechanneling area at the end of the spent-fuel storage pool.

Should it become necessary to move major loads along or over the pools, administrative controls require that the load be moved over the empty portion of the spent-fuel pool and avoid the area of the new-fuel storage vault. The shipping cask cannot be lifted or moved above the new-fuel vault because of their relative locations on the refueling floor.

9.1.2 Spent-Fuel Storage

9.1.2.1 Design Bases

9.1.2.1.1 Nuclear Design

A full array in the loaded spent-fuel rack is designed to be subcritical, by at least 5% Δk. Neutron-absorbing material, as an integral part of the design, is employed to assure that the calculated k_{eff}, including biases and uncertainties, will not exceed 0.95 under all normal and abnormal conditions.

9.1.2.1.2 Storage Design

The fuel storage racks provided in the spent-fuel storage pool provide storage for 270% of one full core fuel load.

9.1.2.1.3 Mechanical and Structural Design

The spent-fuel storage racks in the Reactor Building contain storage space for fuel assemblies (with channels) or bundles (without channels). They are designed to withstand all credible static and seismic loadings. The racks are designed to protect the fuel assemblies and bundles from excessive physical damage which may cause the release of radioactive materials in excess of 10CFR20 and 10CFR100 requirements, under normal and abnormal conditions caused by impacting from either fuel assemblies, bundles or other equipment.

The spent-fuel pool is a reinforced concrete structure with a stainless steel liner. The fuel storage pool liner seismic classification is provided in Table 3.2-1. The bottom of all pool gates are sufficiently high to maintain the water level over the spent-fuel storage racks to provide adequate shielding and cooling. All pool fill and drain lines enter the pool above the safe shielding water level. Redundant anti-siphon vacuum breakers are located at the high point of the pool circulation lines to preclude a pipe break from siphoning the water from the pool and jeopardizing the safe water level.

The racks are constructed in accordance with a quality assurance program that ensures that the design, construction and testing requirements are met.

The fuel storage racks are designed to handle irradiated fuel assemblies. The expected radiation levels are well below the design levels.

In accordance with Regulatory Guide 1.29, the fuel storage racks are Seismic Category I. The structural integrity of the rack will be demonstrated for the load combinations described below using linear elastic design methods.

The applied loads to the rack are:

(1) Dead loads, which are weight of rack and fuel assemblies, and hydrostatic loads

(2) Live loads—effect of lifting an empty rack during installation

(3) Thermal loads—the uniform thermal expansion due to pool temperature changes

(4) Seismic forces of the SSE

(5) Accidental drop of fuel assembly from maximum possible height 1.8m above rack

(6) Postulated stuck fuel assembly causing an upward force of 13.35 kN

The load combinations considered in the rack design are:

(1) Live loads

(2) Dead loads plus SSE

(3) Dead loads plus fuel drop

Thermal loads are not included in the above combinations because they are negligible due to the design of the rack (i.e., the rack is free to expand/contract under pool temperature changes).

The loads experienced under a stuck fuel assembly condition are typically less than those calculated for the seismic conditions and, therefore, need not be included as a load combination.

The storage racks are designed to counteract the tendency to overturn from horizontal loads and to lift from vertical loads. The analysis of the rack assumes an adequate supporting structure, and loads were generated accordingly.

Stress analyses will be performed by the vendor using classical methods based upon shears and moments developed by the dynamic method. Using the given loads, load conditions and analytical methods, stresses will be calculated at critical sections of the rack and compared to acceptance criteria referenced in ASME Section III, Subsection NF. Compressive stability will be calculated according to the AISI code for light gauge structures.

The loads in the three orthogonal directions are considered to be acting simultaneously and are combined using the SRSS method suggested in Regulatory Guide 1.92.

Under fuel drop loading conditions, the acceptance criterion is that, although deformation may occur, k_{eff} must remain <0.95. The rack is designed such that, should the drop of a fuel assembly damage the tubes and dislodge a plate of poison material, the k_{eff} would still be <0.95 as required.

The effect of the gap between the fuel and the storage tube is taken into account on a local effect basis. Dynamic response analysis has shown that the fuel contacts the tube over a large portion of its length, thus preventing an overloaded condition of both fuel and tube.

The vertical impact load of the fuel onto its seat is considered conservatively as being slowly applied without any benefit for strain rate effects. See Subsection 9.1.6.7 for COL license information requirements.

9.1.2.1.4 Thermal-Hydraulic Design

The fuel storage racks are designed to provide sufficient natural convection coolant flow to remove decay heat without reaching excessive water temperatures (100°C).

In the spent-fuel storage pool, the bundle decay heat is removed by recirculation flow to the fuel pool cooling heat exchanger to maintain the pool temperature. Although the design pool exit temperature to the fuel pool cooling heat exchanger is far below boiling, the coolant temperature within the rack is higher, depending on the naturally induced bundle flow which carries away the decay heat generated by the spent fuel. The purchase specification for the fuel storage racks requires the vendor to perform the thermal-hydraulic analyses to evaluate the rate of naturally circulated flow and the maximum rack water exit temperature. See Subsection 9.1.6.8 for COL license information requirements.

9.1.2.1.5 Material Considerations

All structural material used in the fabrication of the fuel storage racks is in accordance with the latest issue of the applicable ASTM specification at the time of equipment order. This material is chosen due to its corrosion resistance and its ability to be formed and welded with consistent quality. The normal pool water operating temperatures are 16 to 66°C.

The storage tube material is permanently marked with identification traceable to the material certifications. The fuel storage tube assembly is compatible with the environment of treated water and provides a design life of 60 years.

9.1.2.2 Facilities Description (Spent-Fuel Storage)

(1) The spent-fuel storage pool is located in the R/B (Figure 1.2-12).

(2) The R/B is a Seismic Category I building protecting the spent fuel from seismic events and externally generated missiles. There are no non-seismic systems, high or moderate energy pipes, or rotating machinery located in the vicinity of the spent-fuel pool or cask loading area on the refueling floor.

(3) The spent-fuel storage and adjacent cask loading area are separated by Seismic Category I gates. These gates isolate the cask loading area from the spent-fuel pool. The gates between the spent-fuel pool and other pools are all Seismic Category I.

(4) The shipping cask is placed in a walled off and drained portion of the spent-fuel pool. The drained volume is flooded, and the Seismic Category I gates removed. The spent fuel is then transferred. This process is reversed to remove the cask. The ratio of the two volumes is such that failure of the gates will not lower water level enough to be unacceptable. Interlocks on the main crane prevent the shipping cask from being carried over any other portion of the spent-fuel storage pool.

(5) The spent fuel storage racks provide storage in the R/B spent-fuel pool for spent fuel received from the reactor vessel during the refueling operation. The spent-fuel storage racks are top-entry racks designed to preclude the possibility of criticality under normal and abnormal conditions. The upper tieplate of the fuel elements rests against the rack to provide lateral support. The lower tieplate sits in the bottom of the rack, which supports the weight of the fuel.

(6) The rack arrangement is designed to prevent accidental insertion of fuel assemblies or bundles between adjacent modules. The storage rack is designed to provide accessibility to the fuel bail for grappling purposes.

9.1.2.3 Safety Evaluation

9.1.2.3.1 Criticality Control

The spent-fuel storage racks are purchased equipment. The purchase specification for the spent-fuel storage racks will require the vendor to provide the information requested in Question 430.190 on criticality analysis of the spent-fuel storage, including the uncertainity value and associated probability and confidence level for the k_{eff} value. See Subsection 9.1.6.3 for COL license information requirements.

9.1.2.3.2 Structural Design and Material Compatibility Requirements

(1) The spent-fuel pool racks provide storage for 270% of the reactor core.

(2) The fuel storage racks are designed to be supported above the pool floor by a support structure. The support structure allows sufficient pool water flow for natural convection cooling of the stored fuel. Since the modules are freestanding (i.e., no supports above the base), the support structure also provides the required dynamic stability.

(3) The racks include individual solid tube storage compartments, which provide lateral restraints over the entire length of the fuel assembly or bundle.

(4) The racks are fabricated from materials used for construction and are specified in accordance with the latest issue of applicable ASTM specifications at the time of equipment order.

(5) Lead-in guides at the top of the storage spaces provide guidance of the fuel during insertion.

(6) The racks are designed to withstand, while maintaining the nuclear safety design basis, the impact force generated by the vertical free-fall drop of a fuel assembly from a height of 1.8m.

(7) The rack is designed to withstand a pullup force of 17.79 kN and a horizontal force of 4.45 kN.

(8) The fuel storage racks are designed to handle irradiated fuel assemblies. The expected radiation levels are well below the design levels.

The fuel storage facilities will be designed to Seismic Category I requirements to prevent earthquake damage to the stored fuel.

The fuel storage pools have adequate water shielding for the stored spent fuel. Adequate shielding for transporting the fuel is also provided. Liquid level sensors are installed to detect a low pool water level, and adequate makeup water is available to assure that the fuel will not be uncovered should a leak occur.

Since the fuel storage racks are made of noncombustible materials and are stored under water, there is no potential fire hazard. The large water volume also protects the spent-fuel storage racks from potential pipe breaks and associated jet impingement loads.

Fuel storage racks are made in accordance with the latest issue of the applicable ASTM specification at the time of equipment order. The storage tubes are permanently marked with identification traceable to the material certifications. The fuel storage tube assembly is compatible with the environment of treated water and provides a design life of 60 years, including allowances for corrosion.

Regulatory Guide 1.13 is applicable to spent-fuel storage facilities. The Reactor Building contains the fuel storage facilities, including the storage racks and pool, and is designed to protect the fuel from damage caused by:

(1) Natural events such as earthquake, high winds and flooding

(2) Mechanical damage caused by dropping of fuel assemblies bundles, or other objects onto stored fuel

9.1.2.4 Summary of Radiological Considerations

By adequate design and careful operational procedures, the safety design bases of the spent-fuel storage arrangement are satisfied. Thus, the exposure of plant personnel to radiation is maintained well below published guideline values. Further details of radiological considerations, including those for the spent-fuel storage arrangement, are presented in Chapter 12.

The pool liner leakage detection system and water level monitoring system, including the corrective action for loss of heat removal capability, are discussed in Subsection 9.1.3. The radiation monitoring system and the corrective action for excessive radiation levels are discussed in Subsections 11.5.2.1.2 and 11.5.2.1.3.

9.1.3 Fuel Pool Cooling and Cleanup System

9.1.3.1 Design Bases

The Fuel Pool Cooling and Cleanup (FPC) System is a non-safety-related system designed to remove the decay heat from the fuel pool, maintain pool water level and quality and remove radioactive materials from the pool to minimize the release of radioactivity to the environs.

The FPC System shall:

(1) Minimize corrosion product buildup and shall control water clarity, so that the fuel assemblies can be efficiently handled underwater.

(2) Minimize fission product concentration in the water which could be released from the pool to the Reactor Building environment.

(3) Monitor fuel pool water level and maintain a water level above the fuel sufficient to provide shielding for normal building occupancy.

(4) Maintain the pool water temperature below 52°C under normal operating conditions. The temperature limit of 52°C is set to establish an acceptable environment for personnel working in the vicinity of the fuel pool. The design basis for the FPC System is to provide cooling after closure of the fuel gates at

the completion of refueling (21 days after shutdown). The normal design basis heat load at this time is the sum of decay heat of the most recent 35% spent-fuel batch plus the heat from the previous four fuel batches after closure of the fuel gates. The RHR System will be used to supplement the FPC System under the maximum load condition as defined in Subsection 9.1.3.2.

9.1.3.2 System Description

The FPC System (Figures 9.1-1 and 9.1-2, and Table 9.1-11) maintains the spent-fuel storage pool below the desired temperature at an acceptable radiation level and at a degree of clarity necessary to transfer and service the fuel bundles.

The FPC System cools the fuel storage pool by transferring the spent fuel decay heat through two 6.91 GJ/h heat exchangers to the Reactor Building Closed Cooling Water (RCW) System. Each of the two heat exchangers is designed to transfer one half of the system design heat load. The FPC System utilizes two parallel 250 m^3/h pumps to provide a system design flow of 500 m^3/h. Each pump is suitable for continuous duty operation. The equipment is located in the Reactor Building.

The system pool water temperature is maintained at or below 52°C. The decay heat released from the stored fuel is transferred to the RCW System. During refueling prior to 21 days following shutdown, the reactor (shutdown cooling) and fuel pool cooling are provided jointly by the RHR and FPC Systems in parallel. The reactor cavity communicates with the fuel pool, since the reactor well is flooded and the fuel gates are open. RHR suction is taken from the vessel shutdown suction lines, pumped through RHR heat exchangers and discharged into the upper pools to improve water clarity for refueling. For the FPC System, fuel pool water is circulated by means of overflow through skimmers around the periphery of the pool and a scupper at the end of the transfer pool drain tanks, pumped through the FPC heat exchangers and filter-demineralizers and back to the pool through the pool diffusers.

After 21 days the fuel pool heat exchangers are capable of maintaining the spent fuel pool temperature below 52°C at the normal heat load from the decay heat of the most recent 35% batch of discharged fuel plus the 4 previous batches stored in the pool. If the fuel pool gates are installed prior to 21 days, or if more than 35% of the most recent batch of fuel is stored in the pool (maximum heat load condition) it may be necessary to utilize one of the RHR systems to supplement the cooling of the spent fuel pool. Supplemental cooling from RHR can be achieved by aligning the RHR B or C in the fuel pool cooling mode. In the fuel pool cooling mode of RHR a suction is taken from the skimmer surge tanks, passed through an RHR heat exchanger, and returned to the fuel pool. In the event one of the RHR systems is aligned in the fuel pool cooling mode it is permissible for that system to be counted as one of the minimum required Emergency Core Cooling systems during shutdown (Modes 4 or 5) as long as the system can be manually realigned and the system is otherwise operable.

Clarity and purity of the pool water are maintained by a combination of filtering and ion exchange. The filter-demineralizers maintain total corrosion product metals at 30 ppb or less with pH range of 5.6 to 8.6 at 25°C for compatibility with fuel storage racks and other equipment. Conductivity is maintained at less than 1.2 µS/cm at 25°C and chlorides less than 20 ppb. Each filter unit in the filter-demineralizer subsystem has adequate capacity to maintain the desired purity level of the pools under normal operating conditions. The flow rate is designed to be approximately that required for two complete water changes per day for the fuel transfer and storage pools. The maximum system flow rate is twice that needed to maintain the specified water quality.

The FPC System is designed to remove suspended or dissolved impurities from the following sources:

(1) Dust or other airborne particles

(2) Surface dirt dislodged from equipment immersed in the pool

(3) Crud and fission products emanating from the reactor or fuel bundles during refueling

(4) Debris from inspection or disposal operations

(5) Residual cleaning chemicals or flush water

A post-processed strainer in the effluent stream of the filter-demineralizer limits the migration of filter material. The filter-holding element can withstand a differential pressure greater than the developed pump head for the system.

The filter-demineralizer units are located separately in shielded cells with enough clearance to permit removing filter elements from the vessels.

Each cell contains only the filter-demineralizer and piping. All valves (inlet, outlet, recycle, vent, drain, etc.) are located on the outside of one shielding wall of the room, together with necessary piping and headers, instrument elements and controls. Penetrations through shielding walls are located so as not to compromise radiation shielding requirements.

The filter-demineralizers are controlled from a local panel. A differential pressure and conductivity instruments provided for each filter-demineralizer unit indicate when backwash is required. Suitable alarms, differential pressure indicators and flow indicators monitor the condition of the filter-demineralizers.

System instrumentation is provided for both automatic and remote-manual operations. A low–low level switch stops the circulating pumps when the fuel pool skimmer-surge tank reserve capacity is reduced to the volume that can be pumped in approximately

one minute with one pump at rated capacity (250 m^3/h). A level switch is provided in the fuel pool to alarm locally and in the control room on high and low level. Temperature elements are provided to display and alarm pool temperature and inlet temperature to the filter-demineralizers in the main control room. In addition, leakage flow detectors in the pool drains and pool liners are provided and alarmed in the control room.

The circulating pumps are controlled from the control room and a local panel. Pump low suction pressure automatically shuts off the pumps. A pump low discharge pressure alarm is indicated in the control room and on the local panel. The circulating pump motors are powered from the normal offsite sources backed by the combustion turbine generators.

The water level in the spent-fuel storage pool is maintained at a height sufficient to provide shielding for normal building occupancy. Radioactive particulates removed from the fuel pool are collected in filter-demineralizer units which are located in shielded cells. For these reasons, the exposure of plant personnel to radiation from the FPC System is minimal. Further details of radiological considerations for this system are provided in Chapter 12.

The circulation patterns within the reactor well and spent-fuel storage pool are established by placing the diffusers and skimmers so that particles dislodged during refueling operations are swept away from the work area and out of the pools.

Check valves prevent the pool from siphoning in the event of a pipe rupture.

Heat from pool evaporation is handled by the building ventilation system. Makeup water is provided through a remote-operated valve.

9.1.3.3 Safety Evaluation

The maximum possible heat load for the FPC System upon closure of the fuel gates (21 days) is the decay heat of the full core load of fuel at the end of the fuel cycle plus the remaining decay heat of the spent fuel discharged at previous refuelings upon closure of the fuel gates; the maximum capacity of the spent-fuel storage pool is 270% of a core. The temperature of the fuel pool water may be permitted to rise to approximately 60°C under these conditions. During cold shutdown conditions, if it appears that the fuel pool temperature will exceed 52°C, the operator can connect the FPC System to the RHR System. Combining the capacities enables the two systems to keep the water temperature below 52°C. The RHR System will be used only to supplement the fuel pool cooling when the reactor is shut down. The reactor will not be started up whenever portions of the RHR System are needed to cool the fuel pool.

These connections may also be utilized during emergency conditions to assure cooling of the spent fuel regardless of the availability of the FPC System. The volume of water in

the storage pool is such that there is enough heat absorption capability to allow sufficient time for switching over to the RHR System for emergency cooling.

During the initial stages of refueling, the reactor cavity communicates with the fuel pool, since the reactor well is flooded and the fuel pool gates are open. Decay heat removal is provided jointly by the RHR and FPC Systems and the pool temperature kept below 60°C. Evaluation studies concluded that after 150 hours decay following shutdown (fuel pool gates open), the combined decay heat removal capacity of the 1-RHR and 1-FPC heat exchangers (single active failure postulated) can keep the pool temperature well below 60°C. The RHR-FPC joint decay heat removal performance evaluation is shown in Table 9.1-12.

The spent-fuel storage pool is designed so that no single failure of structures or equipment will cause inability to:

(1) Maintain irradiated fuel submerged in water

(2) Re-establish normal fuel pool water level

(3) Remove decay heat from the pool

In order to limit the possibility of pool leakage around pool penetrations, the pool is lined with stainless steel. In addition to providing a high degree of integrity, the lining is designed to withstand possible abuse when equipment is moved. No inlets, outlets or drains are provided that might permit the pool to be drained below a safe shielding level, i.e. below a point 3m above the top of active fuel located in the spent fuel storage racks. Lines extending below this level are equipped with siphon breakers, check valves, or other suitable devices to prevent inadvertent pool drainage. Interconnected drainage paths are provided behind the liner welds. These paths are designed to:

(1) Prevent pressure buildup behind the liner plate

(2) Prevent the uncontrolled loss of contaminated pool water to other relatively cleaner locations within the containment or fuel-handling area

(3) Provide liner leak detection and measurement

These drainage paths are designed to permit free gravity drainage to the equipment drain tanks or sumps of sufficient capacity and/or pumped to the Radwaste Building.

A makeup water system and pool water level instrumentation are provided to replace evaporative and leakage losses. Makeup water during normal operation will be supplied from condensate. The Suppression Pool Cleanup (SPCU) System can also be used as a Seismic Category I source of makeup water in case of failure of the normal Makeup Water System.

Both FPC and SPCU Systems are Seismic Category I, Quality Group C design with the exception of the filter-demineralizer portion, which is shared by both systems. Following an accident or seismic event, the filter-demineralizers are isolated from the FPC cooling portion and the SPCU System by two block valves in series at both the inlet and outlet of the common filter-demineralizer portion. Seismic Category I, Quality Group C bypass lines are provided on both FPC and SPCU Systems to allow continued flow of cooling and makeup water to the spent-fuel pool.

Connections from the RHR System to the FPC System provide a Seismic Category I, safety-related makeup capability to the spent-fuel pool. The FPC System from the RHR connections to the spent-fuel pool are Seismic Category I, safety-related. The manual valves which permit the RHR System to take suction from the spent-fuel storage pool and cool the pool are accessible following an accident in sufficient time to permit an operator to align the RHR System to prevent the spent-fuel storage pool from boiling.

Furthermore, fire hoses can be used as an alternate makeup source. The fire protection standpipes in the Reactor Building and their water supply (yard main, one diesel engine driven pump and water source) are seismically designed. A second fire pump, driven by a motor powered from the combustion turbine generator, is also provided. Engineering analysis indicates that, under the maximum abnormal heat load with the pool gates closed and no pool cooling taking place, the pool temperature will reach about 100°C in about 16 hours. This provides sufficient time for the operator to hook up fire hoses for pool makeup. The COL applicant will develop detailed procedures and operator training for providing firewater makeup to the spent-fuel pool. See Subsection 9.1.6.9 for COL license information.

The FPC components, housed in the Seismic Category I Reactor Building, are Seismic Category I, Quality Group C, including all components except the filter-demineralizer. These components are protected from the effects of natural phenomena, such as: earthquake, external flooding, wind, tornado and external missiles. The FPC System is non-safety-related with the exception of the RHR System connections for safety-related makeup and supplemental cooling. The RHR System connections will be protected from the effects of pipe whip, internal flooding, internally generated missiles, and the effects of a moderate pipe rupture within the vicinity. See Subsection 9.1.6.10 for COL license information.

From the foregoing analysis, it is concluded that the FPC System meets its design bases.

9.1.3.4 Inspection and Testing Requirements

No special tests are required because, normally, one pump, one heat exchanger and one filter-demineralizer are operating while fuel is stored in the pool. The spare unit is operated periodically to handle abnormal heat loads or to replace a unit for servicing. Routine visual inspection of the system components, instrumentation and trouble alarms is adequate to verify system operability.

9.1.3.5 Radiological Considerations

The water level in the spent-fuel storage pool is maintained at a height which is sufficient to provide shielding for normal building occupancy. Radioactive particulates removed from the fuel pool are collected in filter-demineralizer units which are located in shielded cells. For these reasons, the exposure of plant personnel to radiation from the FPC System is minimal. Further details of radiological considerations for this and other systems are described in Chapters 11, 12, and 15.

9.1.4 Light Load Handling System (Related to Refueling)

9.1.4.1 Design Bases

The fuel-handling system is designed to provide a safe and effective means for transporting and handling fuel from the time it reaches the plant until it leaves the plant after post-irradiation cooling. Safe handling of fuel includes design considerations for maintaining occupational radiation exposures as low as reasonably achievable (ALARA).

Design criteria for major fuel-handling system equipment are provided in Tables 9.1-2 through 9.1-4, which list the safety class, quality group and seismic category. Where applicable, the appropriate ASME, ANSI, Industrial and Electrical Codes are identified. Additional design criteria are shown below and expanded further in Subsection 9.1.4.2.

The transfer of new fuel assemblies between the uncrating area and the new-fuel inspection stand and/or the new-fuel storage vault to the fuel storage pool is accomplished using a 49.82 kN auxiliary hoist on the R/B crane equipped with a general purpose grapple.From this point on, the fuel will either be handled by the telescoping grapple (or auxiliary hoist) on the refueling machine.

The refueling machine is Seismic Category I from a structural standpoint in accordance with 10CFR50, Appendix A. The refueling machine is constructed in accordance with a quality assurance program that ensures the design, construction and testing requirements are met. Allowable stress due to safe shutdown earthquake (SSE) loading is 120% of yield or 70% of ultimate, whichever is least. A dynamic analysis is performed on the structures using the response spectrum method with load contributions resulting from each of three directions acting simultaneously being combined by the RMS procedure. Working loads of the machine structure are in accordance with the AISC Manual of Steel Construction. All parts of the hoist systems are designed to have a safety factor of at least ten, based on the ultimate strength of the material. A redundant load path is incorporated in the fuel hoists so that no single component failure could result in a fuel bundle drop. Maximum deflection limitations are imposed on the main structures to maintain relative stiffness of the platform. Welding of the machine is in accordance with AWS D14.1 or ASME Boiler and Pressure Vessel Code Section IX. Gears and bearing meet AGMA Gear Classification Manual and ANSI B3.5. Materials

used in construction of load bearing members are to ASTM specifications. For personnel safety, OSHA Part 1910.179 is applied. Electrical equipment and controls meet ANSI CI, National Electric Code, and NEMA Publication No. ICS1, MG1.

The auxiliary fuel grapple and the main telescoping fuel grapple have redundant lifting features and an indicator which confirms positive grapple engagement.

The fuel grapple is used for lifting and transporting fuel bundles. It is designed as a telescoping grapple that can extend to the proper work level and, in its fully retracted state, still maintain adequate water shielding over fuel of 2591 mm (8.5 ft).

In addition to redundant electrical interlocks to preclude the possibility of raising radioactive material out of the water, the cables on the auxiliary hoists incorporate an adjustable, removal stop that will jam the hoist cable against some part of the platform structure to prevent hoisting when the free end of the cable is at a preset distance below water level.

Provision of a separate cask pit, capable of being isolated from the fuel storage pool, will eliminate the potential accident of dropping the cask and rupturing the fuel storage pool. Furthermore, limitation of the travel of the crane handling the cask will preclude transporting the cask over the spent-fuel storage pool.

9.1.4.2 System Description

Table 9.1-5 is a listing of typical tools and servicing equipment supplied with nuclear system. The following paragraphs describe the use of some of the major tools and servicing equipment and address safety aspects of the design where applicable.

Subsection 9.1.5 provides the data that verifies the ABWR Standard Plant heavy load handling systems and satisfies the guidelines of NUREG-0612.

9.1.4.2.1 Spent Fuel Cask

Out of ABWR Standard Plant scope.

9.1.4.2.2 Overhead Bridge Cranes

9.1.4.2.2.1 Reactor Building Crane

The Reactor Building (R/B) crane is a seismically analyzed piece of equipment. The crane consists of two crane girders and a trolley which carries two hoists. The runway track, which supports the crane girders, is supported from the R/B walls at elevation 34,600. The trolley travels laterally on the crane girders carrying the main hoist and auxiliary hoist.

The R/B crane is used to move all of the major components (reactor vessel head, shroud head and separator, dryer assembly and pool gates) as required by plant operations. The R/B crane is used for handling new fuel from the R/B entry hatch to new fuel storage, the new fuel inspection stand and the spent-fuel pool. It also is used for handling the spent fuel cask. The principal design criteria for the R/B crane are described in Subsection 9.1.5.

9.1.4.2.3 Fuel Servicing Equipment

The fuel servicing equipment described below has been designed in accordance with the criteria listed in Table 9.1-2. Items not listed as Seismic Category I, such as hoists, tools and other equipment used for servicing, shall either be removed during operation, moved to a location where they are not a potential hazard to safety-related equipment, or seismically restrained to prevent them from becoming missiles.

9.1.4.2.3.1 Fuel Prep Machine

Two fuel preparation machines (Figure 9.1-3) are mounted on the wall of the spent-fuel pool and are used for stripping reusable channels from the spent fuel and for rechanneling of the new fuel. The machines are also used with the fuel inspection fixture to provide an underwater inspection capability.

Each fuel preparation machine consists of a work platform, a frame, and a movable carriage. The frame and movable carriage are located below the normal water level in the spent fuel pool, thus providing a water shield for the fuel assemblies being handled. The fuel preparation machine carriage has a permanently installed up-travel-stop to prevent raising fuel above the safe water shield level.

9.1.4.2.3.2 New-Fuel Inspection Stand

The new-fuel inspection stand (Figure 9.1-4) serves as a support for the new-fuel bundles undergoing receiving inspection and provides a working platform for technicians engaged in performing the inspection.

The new-fuel inspection stand consists of a vertical guide column, a lift unit to position the work platform at any desired level, bearing seats and upper clamps to hold the fuel bundles in position.

The new-fuel inspection stand will be firmly attached so that it does not fall into or dump personnel into the spent fuel pool during an SSE. (See Subsection 9.1.6.5 for COL license information requirements.)

9.1.4.2.3.3 Channel Bolt Wrench

The channel bolt wrench (Figure 9.1-5) is a manually operated device approximately 3.76m in overall length. The wrench is used for removing and installing the channel

fastener assembly while the fuel assembly is held in the fuel preparation machine. The channel bolt wrench has a socket which mates and captures the channel fastener capscrew.

9.1.4.2.3.4 Channel-Handling Tool

The channel-handling tool (Figure 9.1-6) is used in conjunction with the fuel preparation machine to remove, install, and transport fuel channels in the spent fuel pool.

The tool is composed of a handling bail, a lock/release knob, extension shaft, angle guides and clamp arms which engage the fuel channel. The clamps are actuated (extended or retracted) by manually rotating the lock/release knob.

The channel-handling tool is suspended by its bail from a spring balancer on the channel-handling boom located on the spent fuel pool periphery.

9.1.4.2.3.5 Fuel Pool Vacuum Sipper

The fuel pool vacuum sipper (Figure 9.1-7) provides a means of identifying fuel suspected of having cladding failures. The fuel pool vacuum sipper consists of a fuel isolation container, fluid console, monitoring console with program controller and beta detector and the interconnecting tubing and cables. The suspected fuel assembly is placed in the isolation container. A partial vacuum is established in the gas volume above the fuel assembly. The fission product gas leakage is sensed by the beta detector and monitoring console.

9.1.4.2.3.6 General-Purpose Grapple

The general-purpose grapple (Figure 9.1-8) is a handling tool used generally with the fuel. The grapple can be attached to the jib crane to handle fuel during channeling, or the refueling machine auxiliary hoist.

9.1.4.2.3.7 Jib Crane

The jib crane consists of a motor-driven boom monorail and a motor-driven trolley with an electric hoist. The jib crane is mounted along the edge of the storage pool to be used during refueling operations. Use of the jib crane leaves the refueling machine free to perform general fuel shuffling operations and still permit uninterrupted fuel preparation in the work area. The hoist has two full-capacity brakes and in-series adjustable up-travel limit switches. Upon hoisting, the first of two independently adjustable limit switches automatically stop the hoist cable terminal approximately 2.4m below the jib crane base. Continued hoisting is possible by depressing a momentary contact (up-travel override pushbutton on the pendant) together with a normal hoisting pushbutton. The second independently adjustable limit switch automatically interrupts hoist power at the maximum safe uptravel limit. When the jib crane is used

in the handling of hazardous radioactive materials that must be kept below a specific water level, a fixed mechanical stop is installed on the hoist cable to prevent further hoisting when that travel is reached.

9.1.4.2.3.8 Refueling Machine

Refer to Subsection 9.1.4.2.7.1 for a description of the refueling machine.

9.1.4.2.3.9 Channel Handling Boom

A channel handling boom (Figure 9.1-10) with a spring-loaded balance reel is used to assist the operator in supporting a portion of the weight of the channel as it is removed from the fuel assembly. The boom is set between the fuel preparation machines. With the channel handling tool attached to the reel, the channel may be conveniently moved between the fuel preparation machines.

9.1.4.2.4 Servicing Aids

General area underwater lights are provided with a suitable reflector for illumination. Suitable light support brackets are furnished to support the lights in the reactor vessel to allow the light to be positioned over the area being serviced independent of the platform. Local area underwater lights are small diameter lights for additional illumination. Drop lights are used for illumination where needed.

A radiation hardened portable underwater closed circuit television camera is provided. The camera may be lowered into the reactor vessel and/or spent fuel pool to assist in the inspection and/or maintenance of these areas.

A general purpose, plastic viewing aid is provided to float on the water surface to provide better visibility. The sides of the viewing aid are brightly colored to allow the operator to observe it in the event of filling with water and sinking. A portable, submersible-type, underwater vacuum cleaner is provided to assist in removing crud and miscellaneous particulate matter from the pool floors or reactor vessel. The pump and the filter unit are completely submersible for extended periods. The filter “package” is capable of being remotely changed, and the filters will fit into a standard shipping container for offsite burial. Fuel pool tool accessories are also provided to meet servicing requirements. A fuel sampler is provided to detect defective fuel assemblies during open vessel periods while the fuel is in the core. The fuel sampler head isolates individual fuel assemblies by sealing the top of the fuel channel and pumping water from the bottom of the fuel assembly, through the fuel channel, to a sampling station, and returning the water to the primary coolant system. After a “soaking” period, a water sample is obtained and is radiochemically analyzed to determine possible fuel bundle leakage.

9.1.4.2.5 Reactor Vessel Servicing Equipment

The essentiality and safety classifications, the quality group, and the seismic category for this equipment are listed in Table 9.1-3. Following is a description of the equipment designs in reference to that table.

9.1.4.2.5.1 Reactor Vessel Service Tools

These tools are used when the reactor is shut down and the reactor vessel head is being removed or reinstalled. Tools in this group are:

Stud Handling Tool

Stud Wrench

Nut Runner

Stud Thread Protector

Thread Protector Mandrel

Bushing Wrench

Seal Surface Protector

Stud Elongation Measuring Rod

Dial Indicator Elongation Measuring Device

Head Guide Cap

RIP Impeller/Shaft Assembly Tool

Impeller Storage Rack

The tools are designed for a 60-year life in the specified environment. Lifting tools are designed for a safety factor of 10 or better with respect to the ultimate strength of the material used. When carbon steel is used, it is either hard chrome plated, parkerized, or coated with an approved paint per Regulatory Guide 1.54.

9.1.4.2.5.2 Steamline Plug

The steamline plugs are used during reactor refueling or servicing; they are inserted in the steam outlet nozzles from inside of the reactor vessel to prevent a flow of water from the reactor into the main steamline during servicing of safety/relief valves, main steam isolation valves, or other components of the main steamlines, while the reactor water level is at the refueling level. The steamline plug design provides two seals of different

types. Each one is independently capable of holding full head pressure. The equipment is constructed of corrosion-resistant materials. All calculated safety factors are 5 or better. The plug body is designed in accordance with the "Aluminum Construction Manual" by the Aluminum Association.

9.1.4.2.5.3 Shroud Head Stud Wrench

This is a hand-held tool for tightening and loosening the shroud head studs. It is designed for a 60-year life and is made of aluminum for easy handling and to resist corrosion. Calculations have been performed to confirm the design.

9.1.4.2.5.4 Head Holding Pedestal

Three pedestals are provided for mounting on the refueling floor for supporting the reactor vessel head and strongback/carousel during periods of reactor service. The pedestals have studs which engage three evenly spaced stud holes in the head flange. The flange surface rests on replaceable wear pads made of aluminum.

When resting on the pedestals, the head flange is approximately 0.9m above the floor to allow access to the seal surface for inspection and O-ring replacement.

The pedestal structure is a carbon steel weldment coated with an approved paint. It has a base with bolt holes for mounting it to the concrete floor.

A seismic analysis was made to determine the seismic forces imposed onto the pedestals and floor anchors, using the floor response spectrum method. The structure is designed to withstand these calculated forces and meet the requirements of AISC.

9.1.4.2.5.5 Head Stud Rack

The head stud rack is used for transporting and storage of eight RPV studs and is suspended from the R/B crane hook when lifting studs from the reactor well to the operating floor.

The rack is made of aluminum to resist corrosion and is designed for a safety factor of 5 with respect to the ultimate strength of the material.

The structure is designed in accordance with the "Aluminum Construction Manual" by the Aluminum Association.

9.1.4.2.5.6 Dryer and Separator Strongback

The dryer and separator strongback is a lifting device used for transporting the steam dryer or the shroud head with the steam separators between the reactor vessel and the storage pools. The strongback is a cruciform-shaped I-beam structure, which has a hook box with two hook pins in the center for engagement with the R/B crane sister hook.

The strongback has a socket with a pneumatically operated pin on the end of each arm for engaging it to the four lift eyes on the steam dryer or shroud head.

The strongback has been designed such that one hook pin and one main beam of the cruciform will be capable of carrying the total load and so that no single component failure will cause the load to drop or swing uncontrollably out of an essentially level attitude. The safety factor of all lifting members is 10 or better in reference to the ultimate breaking strength of the materials.

The structure is designed in accordance with "The Manual of Shell Construction" by AISC. The completed assembly is proof-tested at 125% of rated load, and all structural welds are magnetic particle inspected after load test.

9.1.4.2.5.7 Head Strongback/Carousel

The RPV head strongback/carousel is an integrated piece of equipment consisting of a cruciform-shaped strongback, a circular monorail and a circular storage tray.

The strongback is a box-beam structure which has a hook box with two hook pins in the center for engagement with the reactor service crane sister hook. Each arm has a lift rod for engagement to the four lift lugs on the RPV head. The monorail is mounted on extensions of the strongback arms and four additional arms equally spaced between the strongback arms. The monorail circle matches the stud circle of the reactor vessel and serves to suspend stud tensioners and nut-handling devices. The storage tray is suspended from the ends of the same eight arms and surrounds the RPV flange. A manifold is mounted underneath the hook box for distributing hydraulic and pneumatic pressures to equipment traveling on the monorail. The head strongback/carousel serves the following functions:

(1) **Lifting of Vessel Head—**The strongback, when suspended from the R/B crane main hook, will transport RPV head plus the carousel with all its attachments between the reactor vessel and storage on the pedestals.

(2) **Tensioning of Vessel Head Closure—**The carousel, when supported on the RPV head on the vessel, will carry tensioners, its own weight, the strongback, storage of nuts, washers, thread protectors, and associated tools and equipment.

(3) **Storage with RPV Head—**The carousel, when stored with the RPV head holding pedestals, carries the same load for (2) above.

(4) **Storage without RPV Head—**During reactor operation, the carousel is stored on the refueling floor.

The strongback, with its lifting components, is designed to meet the Crane Manufacturers Association of America, Specification No. 70. The design provides a 15% impact allowance and a safety factor of 10 in reference to the ultimate strength of the material used. After completion of welding and before painting, the lifting assembly is proof load tested and all load-affected welds and lift pins are magnetic-particle inspected.

The steel structure is designed in accordance with the Manual of Steel Construction by AISC. Aluminum structures are designed in accordance with the Aluminum Construction Manual by the Aluminum Association.

The strongback is tested in accordance with American National Standard for overhead hoists ANSI B30.16, Paragraph 16-1.2.2.2, such that one hook pin and one main beam of the structure is capable of carrying the total load, and so that no single component failure will cause the load to drop or swing uncontrollably out of an essentially level attitude. The ASME Boiler and Pressure Vessel Code, Section IX (Welder Qualification) is applied to all welder structures.

Regulatory Guide 1.54 — General compliance or alternate assessment for Regulatory Guide 1.54, which provides design criteria for protective coatings, may be found in Subsection 6.1.2.

9.1.4.2.6 In-Vessel Servicing Equipment

The instrument strongback attached to the RBC auxiliary hoist is used for servicing the local power range neutron monitoring (PRNM), startup range neutron monitoring (SRNM), and dry tubes, should they require replacement. The strongback initially supports the dry tube into the vessel. The incore dry tube is then decoupled from the strongback and is guided into place while being supported by the instrument handling tool. Final incore insertion is accomplished from below the reactor vessel. The instrument handling tool is attached to the refueling machine auxiliary hoist and is used for removing and installing PRNM fixed incore dry tubes as well as handling the SRNM dry tubes.

9.1.4.2.7 Refueling Equipment

Fuel movement and reactor servicing operations are performed from platforms which span the refueling, servicing and storage cavities. The Reactor Building is supplied with a refueling machine for fuel movement and servicing, and an auxiliary platform for servicing operations from the vessel flange level.

9.1.4.2.7.1 Refueling Machine

The refueling machine is a gantry crane, which is used to transport fuel and reactor components to and from pool storage and the reactor vessel. The machine spans the spent fuel pool on bedded tracks in the refueling floor. A telescoping mast and grapple suspended from a trolley system is used to lift and orient fuel bundles for placement in the core or storage rack. Control of the machine is from an operator station on the refueling floor.

A position indicating system and travel limit computer is provided to locate the grapple over the vessel core and prevent collisions with pool obstacles. Two auxiliary hoists of 4.71 kN and 9.81 kN capacity, one main and one auxiliary monorail trolley-mounted, are provided for incore servicing. The grapple in its retracted position provides sufficient water shielding over the active fuel during transit. The fuel grapple hoist has a redundant load path so that no single component failure will result in a fuel bundle drop. Interlocks on the machine:

(1) Prevent hoisting a fuel assembly over the vessel with a control rod removed

(2) Prevent collision with fuel pool walls or other structures

(3) Limit travel of the fuel grapple

(4) Interlock grapple hook engagement with hoist load and hoist up power

(5) Ensure correct sequencing of the transfer operation in the automatic or manual mode

9.1.4.2.7.2 Auxiliary Platform

The auxiliary platform provides a reactor flange level working surface for in-vessel inspection and reactor internals servicing, and permits servicing access for the full vessel diameter. Typical operations to be performed are inservice inspections. No hoisting equipment is provided with this platform, as this function can be performed from the refueling machine. The platform operates on tracks at the reactor vessel flange level and is lowered into position by the reactor building crane using the dryer/separator strongback. The platform weighs approximately 17.79 kN and features 1.5m wide work areas and motorized travel. The platform power is supplied by a cable from the refueling floor elevation.

9.1.4.2.7.3 Fuel Assembly Sampler

The fuel assembly sampler (Figure 9.1-11) provides a means of obtaining a water sample for radiochemical analysis from fuel bundles while installed in the core. The fuel assembly sampler consists of a sampling station, two sampling chambers and

interconnecting tubing. The sampling chambers are lowered over four adjacent assemblies and samples are obtained of the water in the fuel channels.

9.1.4.2.8 Storage Equipment

Specially designed equipment storage racks are provided. Additional storage equipment is listed on Table 9.1-5. For fuel storage racks description and fuel arrangement, see Subsections 9.1.1 and 9.1.2.

Defective fuel assemblies are placed in special fuel storage containers, which are stored in the equipment storage rack, both of which are designed for the defective fuel. These may be used to isolate leaking or defective fuel while in the fuel pool and during shipping. Channels can also be removed from the fuel bundle while in a defective fuel storage container.

The fuel pool sipper may be used for out-of-core wet sipping at any time. They are used to detect a defective fuel bundle while circulating water through the fuel bundle in a closed system. The bail on the container head is designed not to fit into the fuel grapple.

9.1.4.2.9 Under-Reactor Vessel Servicing Equipment

The primary functions of the under-reactor vessel servicing equipment are to:

(1) Remove and install control rod drives

(2) Install and remove the neutron detectors

(3) Remove and install RIP motors

Table 9.1-4 lists the equipment and tools required for servicing. Of the equipment listed, the equipment handling platform and the FMCRD handling equipment are powered pneumatically.

The FMCRD handling equipment is designed for the removal and installation of the control rod drives from their housings. This equipment is used in conjunction with the equipment-handling platform. It is designed in accordance with OSHA-1910.179, and American Institute of Steel Construction, AISC.

The undervessel platform provides a working surface for equipment and personnel performing work in the undervessel area. It is a polar platform capable of rotating 360°. This equipment is designed in accordance with the applicable requirements of OSHA (Vol 37, No. 202, Part 1910N), AISC, ANSI-C-1, National Electric Code.

The spring reel is used to pull the incore guide tube (ICGT) seal or incore detector into the ICGT during incore servicing.

The water seal cap is designed to prevent leakage of primary coolant from incore detector housings during detector replacement. It is designed to industrial codes and manufactured from corrosion-resistant material.

The incore flange seal test plug is used to determine the pressure integrity of the incore flange O-ring seal. It is constructed of corrosion-resistant material.

9.1.4.2.10 Fuel-Handling Tasks

The Fuel-Handling and Transfer System provides a safe and effective means of transporting and handling fuel from the time it reaches the plant until it leaves the plant after post-irradiation cooling. The following subsections describe the integrated fuel transfer system which ensures that the design bases of the fuel handling system and the requirements of Regulatory Guide 1.13 are satisfied.

9.1.4.2.10.1 Arrival of Fuel on Site

The new fuel is delivered to the plant on flatbed truck or railcar. The new fuel is delivered to the receiving stations in the Reactor Building (R/B) through the rail and truck entry door. There, the incoming new fuel is unloaded, removed from their shipping crates and moved up to the refueling floor for inspection and channeling.

9.1.4.2.10.2 Refueling Procedure

A general plant refueling and servicing sequence diagram is shown in Figure 9.1-12. Fuel handling procedures are shown in Figures 9.1-13 and 9.1-14 and described below. Typical R/B layouts are shown in Section 1.2 and component drawings of the principal fuel-handling equipment are shown in Figures 9.1-3 through 9.1-11.

When the reactor is sufficiently cooled, the drywell head, head insulation and vessel head are removed by the R/B crane and placed in their respective storage areas. The R/B crane and cruciform-shaped strongback will be used to handle the RPV head and attachments. The strongback is designed so that no single component failure will cause the load to drop or swing uncontrollably out of an essentially horizontal attitude.

The strongback attaches to the crane sister hook by means of an integral hook box and two hook pins. Each pin is capable of carrying the rated load. Each main beam of the cruciform is capable of carrying the rated load.

On both ends of each leg are adjustable lifting rods, suspended vertically to attach the lifting legs to the RPV head. These rods are for adjustment for even four-point load distribution and allow for some flexibility in diametrical location of the lifting lugs on the head.

The maximum potential drop height is at the point where the head is lifted vertically from the vessel and before moving it horizontally to the head storage pedestals.

The shroud head load and the steam dryer load will both be lifted with the dryer/separator strongback.

This strongback is a cruciform shape with box-shaped adapters at the four ends. Each socket box has two compartments to accommodate the two different lug spacings on the dryer and on the shroud head. Pneumatically operated lifting pins will penetrate the sockets to engage the lifting lugs.

Each of the above strongbacks is load tested at 125% rated load. At this test, measurements are taken before test load, under test load and after releasing load, to verify that deflections are within acceptable limits. A magnetic particle test of structural welds is performed after the load test to assure structural integrity.

An outer seal exists around the vessel flange to seal the drywell from the reactor well. Water is pumped into the reactor well. Once the reactor well is filled, the dryer and separator are removed and transferred to their storage areas within the dryer/separator (D/S) pit using the D/S strongback. The tools are used in these and subsequent reactor servicing operations are listed in Table 9.1-2. Once access to the core is possible, the refueling machine can relocate and move fuel assemblies to and from the pool storage racks. Simultaneously, the RIP, FMCRD hydraulic system, and the Neutron Monitoring System may be serviced from beneath the vessel.

During refueling, the refueling machine transfers the spent fuel from the core to the spent fuel pool. The spent fuel assembly is placed in the fuel preparation machine, where its channel is removed and fitted to the new-fuel bundle previously placed in the machine. During channeling, the spent fuel bundle is placed in the storage racks by the refueling platform. The refueling platform then places another new-fuel bundle in the fuel preparation machine for channeling.

When refueling and servicing are completed, the steam separator assembly is replaced in the vessel, the steamline plugs removed and the steam dryer returned to the vessel. At this point, the gates are installed, isolating the reactor well from the other pools. The reactor well is then drained to the main condenser. With the reactor well empty, the vessel and drywell heads are replaced.

9.1.4.2.10.2.1 New Fuel Preparation

9.1.4.2.10.2.1.1 Receipt and Inspection of New Fuel

The incoming new fuel will be delivered to a receiving station within the Reactor Building (R/B). The crates are unloaded from the transport vehicle and examined for damage during shipment.

The crate dimensions are approximately 813 x 813 x 5486 mm. Each crate contains two fuel bundles supported by an inner metal container. Shipping weight of each unit is

approximately 13.35 kN. The receiving station shall include a separate area where the crate cover and the inner metal container can be removed from the crate. Both inner and outer shipping containers are reusable. Handling during uncrating is accomplished by use of the R/B cranes. The inner container is tilted to a position which is almost vertical, while the fuel bundles are unstrapped and removed from the container with the R/B crane. They are then transported to storage in the new-fuel storage racks located in the new-fuel storage vault or to the new-fuel inspection stand located on the refueling floor.

The actual inspection of the new fuel is normally deferred until all the reusable containers are emptied and the area around the new-fuel vault cleared. At that time, the individual fuel bundles are removed from the vault, inserted in the new-fuel inspection stand, dimensionally and visually inspected, and returned to the storage vault to await assembly with channels. The new-fuel inspection stand accommodates two fuel assemblies at one time.

9.1.4.2.10.2.1.2 Channeling New Fuel

New fuel is unloaded from the new-fuel vault and transported to the fuel racks in the spent fuel pool. Usually, channeling new fuel is done concurrently with dechanneling spent fuel. Two fuel preparation machines are located in the spent fuel pool, one used for dechanneling spent fuel and the other to channel new fuel. The procedure is as follows:

> Using the refueling platform, a spent fuel bundle is transported to the fuel prep machine. The channel is unbolted from the bundle using the channel bolt wrench. The channel handling tool is fastened to the top of the channel and the fuel prep machine carriage is lowered removing the fuel from the channel. The channel is then positioned over a new-fuel bundle located in fuel prep machine No. 2 and the process reversed. The channeled new fuel is stored in the pool storage racks ready for insertion into the reactor.

9.1.4.2.10.2.1.3 Equipment Preparation

Another ingredient in a successful refueling outage is equipment and new fuel readiness. Equipment long lying dormant must be brought to life. All tools, grapples, slings, strongbacks, stud tensioners, etc., will be given a thorough inspection and operational check, and any defective (or well worn) parts will be replaced. Air hoses on grapples will be checked. Crane cables will be routinely inspected. All necessary maintenance will be performed to preclude outage extension due to equipment failure.

9.1.4.2.10.2.2 Reactor Shutdown

The reactor is shut down according to a prescribed planned procedure. During cooldown, the reactor pressure vessel is vented and filled to above flange level to promote cooling.

9.1.4.2.10.2.2.1 Drywell Head Removal

Immediately after cooldown, the work to remove the drywell head can begin. The drywell head will be attached by a quick disconnect mechanism. To remove the head, the quick disconnect pins are withdrawn and stored separately for reinsertion when the head is replaced. The drywell head is lifted by the R/B crane to its storage space on the refueling floor. The drywell seal surface protector is installed before any other activity proceeds in the reactor well area.

9.1.4.2.10.2.2.2 Reactor Well Servicing

When the drywell head has been removed, several pipe lines are exposed. These lines penetrate the reactor well through openings. The piping must be removed and the openings sealed. There are also various vent openings which must be made watertight.

Water level in the vessel is now lowered to flange level in preparation for head removal.

9.1.4.2.10.2.3 Reactor Vessel Opening

9.1.4.2.10.2.3.1 Vessel Head Removal

The combination head strongback and carousel stud tensioner is transported by the R/B crane and positioned on the reactor vessel head.

Each stud is tensioned and its nut loosened in a series of two to three passes. Finally, when the nuts are loose, they are backed off using a nut runner until only a few threads engage. The suspended nut is hand rotated free from the stud, and the nuts and washers are placed in the racks provided for them on the carousel. When all the nuts and washers are removed, the vessel stud protectors and vessel head guide caps are installed.

Next, the head, strongback and carousel are transported by the R/B crane to the head holding pedestals on the refueling floor. The head holding pedestals keep the vessel head elevated to facilitate inspection and O-ring replacement.

The studs in line with the fuel transfer gates are removed from the vessel and placed in the rack provided for them. The loaded rack is transported to the refueling floor for storage. Removal of these studs provides a path for fuel movement.

9.1.4.2.10.2.3.2 Dryer Removal

The dryer-separator strongback is lowered by the R/B crane and attached to the dryer lifting lugs. The dryer is lifted from the reactor vessel and transported underwater to its storage location in the D/S pit adjacent to the reactor well.

9.1.4.2.10.2.3.3 Separator Removal

In preparation for the separator removal, the steamline plugs are installed in the four main steam nozzles. The separator is then unbolted from the shroud using shroud head bolt wrenches. When the unbolting is accomplished, the dryer separator strongback is lowered into the vessel and attached to the separator lifting lugs. The separator is lifted from the reactor vessel and transported underwater to the storage location in the D/S pit adjacent to the reactor well.

9.1.4.2.10.2.3.4 Fuel Assembly Sampling

During reactor operation, the core offgas radiation level is monitored. If a rise in offgas activity has been noted, the reactor core may be sampled during shutdown to locate any leaking fuel assemblies. The fuel sample isolates up to a four-bundle array in the core. This stops water circulation through the bundles and allows fission products to concentrate if a bundle is defective. After 10 minutes, a water sample is taken for fission product analysis. If a defective bundle is found, it is transferred to the spent fuel pool and stored in a special defective fuel storage container to minimize background activity in the spent fuel pool.

9.1.4.2.10.2.4 Refueling and Reactor Servicing

The gate isolating the spent fuel pool from the reactor well is removed, thereby interconnecting the pool areas. The refueling of the reactor can now begin.

9.1.4.2.10.2.4.1 Refueling

During a normal outage, approximately 25% of the fuel is removed from the reactor vessel, 25% of the fuel is shuffled in the core (generally from peripheral to center locations) and 25% new fuel is installed. The actual fuel handling is done with the refueling platform. It is used as the principal means of transporting fuel assemblies between the reactor well and the spent fuel pool; it also serves as a hoist and transport device. The machine travels on a track extending along each side of the reactor well and spent fuel pool and supports the trolley, refueling grapple, and auxiliary hoists. The grapple is suspended from a trolley that can traverse the width of the platform.

The refueling machine has two auxiliary hoists of 4.71 kN and 9.81 kN capacity. One hoist normally can be used with appropriate grapples to handle control rods, guide tubes, fuel support pieces, sources and other internals of the core. The auxiliary hoist

can also serve as a means of handling other equipment within the pool. A second auxiliary hoist is mounted on the platform trolley.

The machine control system permits variable-speed, simultaneous operation of all three platform motions. Maximum speeds are:

(1)	Bridge	20 m/min
(2)	Trolley	10 m/min
(3)	Grapple hoist	12 m/min

In the refueling machine control room, a single operator can control all the motions of the platform required to handle the fuel assemblies during refueling. Interlocks on both the grapple hoist and auxiliary hoist prevent hoisting of a fuel assembly over the core with a control rod withdrawn; interlocks also prevent withdrawal of a blade with a fuel assembly over the core attached to either the fuel grapple or auxiliary hoists. Interlocks block travel over the reactor in the startup mode.

The refueling machine contains a system that indicates the position of the fuel grapple over the core. The readout, in the local control room, matches the core arrangement cell identification numbers. The position indicator is accurate within 5 mm, relative to actual position, and minimizes jogging required to correctly place the grapple over the core.

To move fuel, the fuel grapple is aligned over the fuel assembly, lowered and attached to the fuel bundle bail. The fuel bundle is raised out of the core, moved through the refueling slot to the spent fuel pool, positioned over the storage rack and lowered into the rack. Fuel is shuffled and new fuel is moved from the spent fuel pool to the reactor vessel in the same manner.

9.1.4.2.10.2.5 Vessel Closure

The following steps, when performed, will return the reactor to operating condition. The procedures are the reverse of those described in the preceding sections. Many steps are performed in parallel and not as listed.

(1) **Core Verification—**the core position of each fuel assembly must be verified to assure that the desired core configuration has been attained. Underwater TV with a video tape is utilized. Cable optional.

(2) **FMCRD Tests—**the control rod drive timing, friction and scram tests are performed as required.

(3) Replace separator.

(4) Bolt separator and remove four steamline plugs.

(5) Replace steam dryer.

(6) Install gates.

(7) Drain reactor well.

(8) Remove drywell seal surface covering; open drywell vents.

(9) Replace vessel studs.

(10) Install reactor vessel head.

(11) Install vessel head piping and insulation.

(12) Hydro test vessel if required.

(13) Install drywell head; leak check.

(14) Install shield plugs.

(15) Stow gates.

(16) **Startup Tests—**the reactor is returned to full power operation. Power is increased gradually in a series of steps until the reactor is operating at rated power. At specific steps during the approach to power, the incore flux monitors are calibrated.

9.1.4.2.10.3 Departure of Fuel From Site

The empty cask arrives at the plant on a special flatbed railcar or truck. The personnel shipping barrier and transfer impact structure are removed from the large casks and stored outside the rail entry door. Health physics personnel check the cask exterior to determine if decontamination is necessary. Decontamination, if required, and washdown to remove road dirt, is performed before removal of the cask from the transport vehicle. The R/B equipment entry airlock door is opened and the cask with its transport device moved into the building. The rail car or truck is blocked in position.

The airlock door is closed and the cask is inspected for shipping damage.

The cask cooling system of the transport vehicle is disconnected. The cask yoke is removed from its storage position on the flatbed and attached to the cask trunnions. The yoke engagement, car brakes and wheel blocks and clearances for cask tilt and lift are checked. The cask is tilted to the vertical position with combined main hoist lift and trolley movement. With the cask in a vertical position, the cask is lifted approximately

1.5m off the transport device skid mounting trunnions to clear the upper coolant duct. The cask is moved up to the refueling floor and then into the cask washdown pit and slowly lowered to the floor of the pit. Closure head lifting cables on the yoke are attached to the head and secured and the closure nuts are disengaged. The cask is next raised and transferred into the cask pit.

The cask is moved to a position over the center of the cask pit and slowly lowered into the cask pit until it rests on the cask pit floor.

The cask lifting yoke is lowered until disengaged from the cask trunnions and the closure head lifted off the cask. The closure head and yoke are moved into the cask washdown pit for storage. The canal gates between the cask pit and the spent fuel pool are removed and spent fuel transfer from the storage racks to the cask is started.

Spent fuel is transferred underwater from storage in the spent fuel pool to the cask using the telescoping fuel grapple mounted on the refueling machine. When the cask is filled with spent fuel, the gate between the cask pit and the spent fuel pool is replaced. The closure head is replaced on the cask and the lift yoke engaged with the cask trunnions. The loaded cask is raised, transferred to the cask washdown pit, and slowly lowered to the pit floor.

The cask is checked by health physics personnel and decontamination is performed in the cask washdown pit with high pressure water sprays, chemicals and hand scrubbing as required to clean the cask to the level required for transport. Cooling connections are available in the cask washdown pit in the event cooling is required during decontamination activities. The remaining closure nuts are replaced and tightened. Smear tests are performed to verify cleaning to offsite transportation requirements.

The cleaned cask is lowered from the refueling floor to the R/B entry lock onto cask skids with the R/B crane and mounted on the transport vehicle. The cask cooling system of the transport vehicle is connected to the cask and the cask internal pressure and temperature are monitored. When they are at equilibrium conditions, the cask is ready for shipment. The personnel barrier and impact structure are replaced. The R/B airlock facility doors are opened and the cask and transport device are moved out of the R/B.

9.1.4.3 Safety Evaluation of Fuel-Handling System

Safety aspects (evaluation) of the fuel servicing equipment are discussed in Subsection 9.1.4.2.3, and safety aspects of the refueling equipment are discussed throughout Subsection 9.1.4.2.7. In addition, a summary safety evaluation of the fuel-handling system is provided below.

The fuel prep machine removes and installs channels with all parts remaining underwater. Mechanical stops prevent the carriage from lifting the fuel bundle or

assembly to height where water shielding is not sufficient. Irradiated channels, as well as small parts such as bolts and springs, are stored underwater. The spaces in the channel storage rack have center posts which prevent the loading of fuel bundles into this rack.

There are no nuclear safety problems associated with the handling of new-fuel bundles, singly or in pairs. Equipment and procedures prevent an accumulation of more than two bundles in any location.

The refueling machine is designed to prevent it from toppling into the pools during a SSE. Redundant safety interlocks, as well as limit switches, are provided to prevent accidentally running the grapple into the pool walls. The grapple utilized for fuel movement is on the end of a telescoping mast. At full retraction of the mast, the grapple is sufficiently below water surface, so there is no chance of raising a fuel assembly to the point where it is inadequately shielded by water. The grapple is hoisted by redundant cables inside the mast, and is lowered by gravity. A digital readout is displayed to the operator, showing him the exact coordinates of the grapple over the core.

The mast is suspended and gimbaled from the trolley, near its top, so that the mast can be swung about the axis of platform travel, in order to remove the grapple from the water for servicing and for storage.

The grapple has two independent hooks, each operated by an air cylinder. Engagement is indicated to the operator. Interlocks prevent grapple disengagement until a “slack cable” signal from the lifting cables indicates that the fuel assembly is seated. The slack cable indication is also used to determine if a fuel bundle is lodged in a position other than its normal, seated position in the core.

In addition to the slack cable signal, the elevation of the grapple is continuously indicated. Also, after the grapple is disengaged, the position of the upper part of the fuel bundle can be observed using television.

In addition to the main hoist on the trolley, there are two auxiliary hoists on the trolley. These three hoists are precluded from operating simultaneously because control power is available to only one of them at a time.

The two auxiliary hoists have electrical interlocks which prevent the lifting of their loads higher than a specified limit. Adjustable mechanical jam-stops on the cables back up these interlocks.

The cask is moved by the R/B crane to the cask pit and gated off and the cask pit filled with water. Only then is the spent fuel pool connected to the cask pit and the fuel transfer begun. When the cask is loaded, the spent fuel pool is gated closed and the cask removal procedure reversed. A cask decontamination pit area is provided.

Light loads such as the blade guide, fuel support casting, control rod or control rod guide tube weigh considerably less than a fuel bundle and are administratively controlled to eliminate the movement of any light load over the spent fuel pool above the elevation required for fuel assembly handling. Thus, the kinetic energy of any light load would be less than a fuel bundle and would have less damage induced. Secondly, to satisfy NUREG-0554, the equipment handling components over the spent fuel pool are designed to meet the single-failure-proof criteria.

The spent fuel storage racks are purchased equipment. The purchase specification for these racks will require the vendor to provide the information requested in Question 430.192 pertaining to load drop analysis (see Subsection 9.1.6.4 for COL license information).

In summary, the fuel-handling system complies with General Design Criteria 2, 3, 4, 5, 61, and 63, and applicable portions of 10CFR50.

The safety evaluation of the new and spent fuel storage is presented in Subsections 9.1.1.3 and 9.1.2.3.

9.1.4.4 Inspection and Testing Requirements

9.1.4.4.1 Inspection

Refueling and servicing equipment is subject to the strict controls of quality assurance, incorporating the requirements of federal regulation 10CFR50 Appendix B. The fuel storage racks and refueling machine have an additional set of engineering specified "quality requirements" that identify features which require specific QA verification of compliance to drawing requirements.

For components classified as American Society of Mechanical Engineers (ASME) Section III, the shop operation must secure and maintain an ASME "N" stamp, which requires the submittal of an acceptable ASME quality plan and a corresponding procedural manual.

Additionally, the shop operation must submit to frequent ASME audits and component inspections by resident state code inspectors. Prior to shipment, every component inspection item is reviewed by QA supervisory personnel and combined into a summary product quality checklist (PQL). By issuance of the PQL, verification is made that all quality requirements have been confirmed and are on record in the product's historical file.

9.1.4.4.2 Testing

Qualification testing is performed on refueling and servicing equipment prior to multi-unit production. Test specifications are defined by the responsible design engineer and

may include a sequence of operations, load capacity and life cycles tests. These test activities are performed by an independent test engineering group and, in many cases, a full design review of the product is conducted before and after the qualification testing cycle. Any design changes affecting function, that are made after the completion of qualification testing, are requalified by test or calculation.

Functional tests are performed in the shop prior to the shipment of production units and generally include electrical tests, leak tests, and sequence of operations tests.

When the unit is received at the site, it is inspected to ensure no damage has occurred during transit or storage. Prior to use and at periodic intervals, each piece of equipment is again tested to ensure the electrical and/or mechanical functions are operational.

Passive units, such as the fuel storage racks, are visually inspected prior to use.

Fuel-handling and vessel servicing equipment preoperational tests are described in Subsection 14.2.12.

9.1.4.5 Instrumentation Requirements

9.1.4.5.1 Refueling Machine

The refueling machine has a X-Y-Z position indicator system that informs the operator which core fuel cell the fuel grapple is accessing. Interlocks and a control room monitor are provided to prevent the fuel grapple from operating in a fuel cell where the control rod is not in the proper orientation for refueling.

Additionally, there is a series of mechanically activated switches and relays that provides monitor indications on the operator's console for grapple limits, hoist and cable load conditions, and confirmation that the grapple's hook is either engaged or released.

A series of load cells is installed to provide automatic shutdown whenever threshold limits are exceeded for either the fuel grapple or the auxiliary hoist units.

9.1.4.5.2 Fuel Support Grapple

Although the fuel support grapple is not essential to safety, it has an instrumentation system consisting of mechanical switches and indicator lights. This system provides the operator with a positive indication that the grapple is properly aligned and oriented and that the grappling mechanism is either extended or retracted.

9.1.4.5.3 Other

Refer to Table 9.1-5 for additional refueling and servicing equipment not requiring instrumentation.

9.1.4.5.4 Radiation Monitoring

The fuel area ventilation exhaust radiation monitoring is discussed in Subsection 11.5.2.1.3.

9.1.5 Overhead Heavy Load Handling Systems (OHLH)

9.1.5.1 Design Bases

The equipment covered by this subsection concerns items considered as heavy loads that are handled under conditions that mandate critical handling compliance.

Critical load handling conditions include loads, equipment, and operations which, if inadvertent operations or equipment malfunctions either separately or in combination, could cause:

(1) A release of radioactivity.

(2) A criticality accident.

(3) The inability to cool fuel within reactor vessel or spent fuel pool.

(4) Prevent safe shutdown of the reactor. This includes risk assessments to spent fuel and storage pool water levels, cooling of fuel pool water, new fuel criticality. This includes all components and equipment used in moving any load weighing more than one fuel assembly, including the weight of its associated handling devices (i.e. 4.45 kN).

The R/B crane as designed shall provide a safe and effective means for transporting heavy loads, including the handling of new and spent fuel, plant equipment and service tools. Safe handling includes design considerations for maintaining occupational radiation exposure as low as practicable during transportation and handling.

Where applicable, the appropriate seismic category, safety class quality group, ASME, ANSI, industrial and electrical codes have been identified (Tables 3.2-1 and 9.1-6). The designs will conform to the relevant requirements of General Design Criteria 2, 4 and 61 of 10CFR50 Appendix A.

The lifting capacity of each crane or hoist is designed to at least the maximum actual or anticipated weight of equipment and handling devices in a given area serviced. The hoists, cranes, or other lifting devices shall comply with the requirements of ANSI N14.6, ANSI B30.9, ANSI B30.10 and NUREG-0612, Subsection 5.1.1(4) or 5.1.1(5). Cranes and hoists are also designed to criteria and guidelines of NUREG-0612, Subsection 5.1.1(7), ANSI B30.2 and CMAA-70 specifications for electrical overhead traveling cranes, including ANSI B30.11, ANSI B30.16, and NUREG-0554 as applicable.

9.1.5.2 System Description

9.1.5.2.1 Reactor Building Crane

The Reactor Building (R/B) is a reinforced concrete structure which encloses the reinforced concrete containment vessel, the refueling floor, new-fuel storage vault, the storage pools for spent-fuel and the dryer and separator and other equipment. The R/B crane provides heavy load lifting capability for the refueling floor. The main hook 1.471 MN will be used to lift the concrete shield blocks, drywell head, reactor pressure vessel (RPV) head insulation, RPV head, dryer, separator strongback, RPV head strongback carousel, new-fuel shipping containers, and spent-fuel shipping cask. The orderly placement and movement paths of these components by the R/B crane precludes transport of these heavy loads over the spent fuel storage pool or over the new-fuel storage vault.

The R/B crane will be used during refueling/servicing as well as when the plant is online. During refueling/servicing, the crane handles the shield plugs, drywell and reactor vessel heads, steam dryer and separators, etc. (Table 9.1-7). Minimum crane coverage includes R/B refueling floor laydown areas, and R/B equipment storage pit. During normal plant operation, the crane will be used to handle new-fuel shipping containers and the spent-fuel shipping casks. Minimum crane coverage must include the new-fuel vault, the R/B equipment hatches, and the spent-fuel cask loading and washdown pits. A description of the refueling procedure can be found in Section 9.1.4.

The R/B crane will be interlocked to prevent movement of heavy loads over the spent-fuel storage portion of the spent-fuel storage pool. Since the crane is used for handling large heavy objects over the open reactor, the crane is of Type I design. The R/B crane shall be designed to meet the single-failure-proof requirements of NUREG-0554.

9.1.5.2.2 Other Overhead Load Handling System

9.1.5.2.2.1 Upper Drywell Servicing Equipment

The upper drywell arrangement provides servicing access for the main steam isolation valves (MSIVs), feedwater isolation valves, safety/relief valves (SRVs), emergency core cooling systems (ECCS) isolation valves, and drywell cooling coils, fans and motors. Access to the space is via the R/B through either the upper drywell personnel lock or equipment hatch. All equipment is removed through the upper drywell equipment hatch. Platforms are provided for servicing the feedwater and MSIVs, SRVs, and drywell cooling equipment with the object of reducing maintenance time and operator exposure. The MSIVs, SRVs, and feedwater isolation valves all weigh in excess of 4.45 kN. Thus, they are considered heavy loads.

With maintenance activity only being performed during a refueling outage, only safe shutdown ECCS piping and valves need be protected from any inadvertent load drops. Since only one division of ECCS is required to maintain the safe shutdown condition and the ECCS divisions are spatially separated, an inadvertent load drop that breaks more than one division of ECCS is not credible. In addition, two levels of piping support structures and equipment platforms separate and shield the ECCS piping from heavy loads transport path.

This protection is adequate such that no credible load drop can cause either:

(1) A release of radioactivity.

(2) A criticality accident.

(3) The inability to cool fuel within reactor vessel or spent fuel pool.

9.1.5.2.2.2 Lower Drywell Servicing Equipment

The lower drywell (L/D) arrangement provides for servicing, handling and transportation operations for the RIP and FMCRD. The lower drywell OHLHS consists of a rotating equipment service platform, chain hoists, FMCRD removal machine, a RIP removal machine, and other special purpose tools.

The rotating equipment platform provides a work surface under the reactor vessel to support the weight of personnel, tools, and equipment and to facilitate transportation moves and heavy load handling operations. The platform rotates 360° in either direction from its stored or “idle” position. The platform is designed to accommodate the maximum weight of the accumulation of tools and equipment plus a maximum sized crew. Weights of tools and equipment are specified in the interface control drawings for the equipment used in the lower drywell. Special hoists are provided in the lower drywell and reactor building to facilitate handling of these loads.

(1) Reactor Internal Pump Servicing

There are 10 RIPs and their supporting instrumentation and heat exchangers in the L/D that require servicing. The facilities provided for servicing the RIPs include:

(a) L/D equipment platform with facilities to rotate the motor from vertical to horizontal and place it on a cart for direct pull out to the R/B. The equipment platform rotates to facilitate alignment with the installed pump locations.

(b) Attachment points for rigging the RIP heat exchanger into place. The RIP heat exchanger can be lowered straight down to the equipment platform.

(c) Access to the RIP equipment platform is via stairs. There is a ladder access to the RIP heat exchanger maintenance platform.

(d) The L/D equipment tunnel and hatch are utilized to remove the RIP motors from the lower drywell.

(e) The RIP motor servicing area is directly outside the L/D equipment hatch.

The 10 RIPs have wet induction motors in housings which protrude into the lower drywell from the RPV bottom head. These are in a circle at a radius of 3162.5 mm from the RPV centerline. For service, the motor is removed from below and outside, whereas the diffuser, impeller and shaft are removed from above and inside the RPV.

The motor, with its lower flange attached, weighs approximately 32.36 kN, is 830 mm in diameter and 1925 mm high. The flange has “ears” that extend from two sides, 180° apart. These ears, which are used to handle the motor, increase the flange diameter to 1200 mm for a width of 270 mm.

The motor, suspended from jack screws, is lowered straight down out of its housing onto the equipment platform. The motor is then moved, circumferentially and lifted onto a rail-mounted transport cart for direct removal through the equipment removal L/D equipment tunnel and hatch. The motor is transported horizontally out of the containment and into the motor service shop immediately adjacent to the L/D equipment hatch.

The RIP servicing equipment includes the cart to transport the motor from the service area through the equipment hatch to the L/D equipment platform. The interface for this equipment is the rails on the equipment platform that permit locating the motor below its nozzle on the RPV. The servicing equipment includes a chain hoist for rotating the RIP motor from horizontal to vertical and a hydraulic lift to raise it from the equipment platform to its installed position below the RPV. Facilities are provided for handling stud tensioners, blind flanges, other tools, drains and vents used in RIP servicing.

Servicing of the RIP heat exchanger, such as removal of the tube bundle, will be accomplished by rigging to attachment points on the RPV pedestal and structural steel in the area. A direct vertical removal path is provided from the heat exchanger installed position to the equipment platform. The operation is performed by a chain hoist. This is considered to be a nonroutine servicing operation.

These RIPs are serviced only when the reactor is in a safe shutdown mode. In addition, there is no safety-related equipment below either the RIPs or the RIP heat exchangers. Inadvertent load drops of either component cannot cause either (1) a release of radioactivity, (2) a criticality accident, or (3)the inability to cool fuel within reactor vessel or spent fuel pool.

(2) Fine Motion Control Rod Drive

There are 205 FMCRDs in the L/D that require servicing. There are two types of servicing operations: (1) replacement of the FMCRD drive mechanism and (2) motor and seal replacement. Separate servicing equipment is provided for each of these operations.

(a) The FMCRD servicing machine has its own mechanisms for rotating and raising FMCRD assemblies from a carrier on the equipment platform to their installed position. This servicing machine interfaces with the L/D equipment platform, which permits positioning the servicing machine under any of the 205 FMCRDs.

(b) A separate machine and cart are provided for servicing FMCRD motors and seal assemblies and transporting them to the service shop located immediately outside the L/D equipment hatch.

There is no safety-related equipment below either component. Inadvertent load drops by the FMCRD servicing equipment cannot cause either (1) a release of radioactivity, (2) a criticality accident, or (3) the inability to cool fuel within the reactor vessel or spent fuel pool.

9.1.5.2.2.3 Main Steam Tunnel Servicing Equipment

The main steam tunnel is a reinforced concrete structure that surrounds the main steamlines and feedwater lines. The safety-related valve area of the main steam tunnel is located inside the Reactor Building. Access to the main steam tunnel is during a refueling/servicing outage. At this time, MSIVs or feedwater isolation valves and/or feedwater check valves may be removed using permanent overhead monorail type hoists. They are transported by monorail out of the steam tunnel and placed on the floor below a ceiling removal hatch. Valves are then lifted through the ceiling hatch by valve service shop monorail. During shutdown, all of the piping and valves are not required to operate. Any load drop can only damage the other valves or piping within the main steam tunnel. Inadvertent load drops by the main steam tunnel servicing equipment cannot cause either:

(1) A release of radioactivity.

(2) A criticality accident.

(3) The inability to cool fuel within reactor vessel or spent fuel pool.

9.1.5.2.2.4 Other Servicing Equipment

In the Reactor Building and Control Building (except within the containment, within the main steam tunnel and on the refueling floor), no safety-related components of one division shall be routed over any portion of a safety-related portion of another division. A load drop accident in one division causing the complete loss of a second division is not credible. Hence, inadvertent load drops cannot cause either (1) a release of radioactivity, (2) a criticality accident, (3) the inability to cool fuel within reactor vessel or spent fuel pool, or (4) prevent the safe shutdown of the reactor. Therefore, all servicing equipment located outside the containment, the main steam tunnel, or the refueling floor are not subject to the requirements of Subsection 9.1.5.

9.1.5.3 Applicable Design Criteria For All OHLH Equipment

All handling equipment subject to heavy loads handling criteria will have ratings consistent with lifts required and the design loading will be visibly marked. Cranes/hoists or monorail hoists will pass over the centers of gravity of heavy equipment that is to be lifted. In locations where a single monorail or crane handles several pieces of equipment, the routing shall be such that each transported piece will pass clear of other parts. If, however, due to restricted overhead space the transported load cannot clear the installed equipment, then the monorail may be offset to provide transport clearance. A lifting eye offset in the ceiling over each piece of equipment can be used to provide a Y-lift so that the load can be lifted upward until free and then swung to position under the monorail for transport.

Pendant control is required for the bridge, trolley and auxiliary hoist to provide efficient handling of fuel shipping containers during receipt and also to handle fuel during new-fuel inspection. The crane control system will be selected considering the long lift required through the equipment hatch as well as the precise positioning requirements when handling the RPV and drywell heads, RPV internals, and the RPV head stud tensioner assembly. The control system will provide stepless regulated variable speed capability with high empty-hook speeds. Efficient handlings of the drywell and RPV heads and stud tensioner assembly require that the control system provide spotting control. Since fuel shipping cask handling involves a long duration lift, low speed and spotting control, thermal protection features will be incorporated.

Heavy load equipment is also used to handle light loads and related fuel handling tasks. Therefore, much of the handling systems and related design, descriptions, operations, and service task information of Subsection 9.1.4 is applicable here. The cross reference between the handling operations/equipment and Subsection 9.1.4 is provided in Table 9.1-7. See Table 9.1-8 for a summary of heavy load operation.

Transportation routing drawings will be made covering the transportation route of every piece of heavy load removable equipment from its installed location to the appropriate service shop or building exit. Routes will be arranged to prevent congestion and to assure safety while permitting a free flow of equipment being serviced. The frequency of transportation and usage of route will be documented based on the predicted number of times usage either per year and/or per refueling or service outage.

Safe load paths/routing will comply with the requirements of NUREG-0612, Subsection 5.1.1(1).

9.1.5.4 Equipment Operating Procedures Maintenance and Service

Each item of equipment requiring servicing will be described on an interface control diagram (ICD), delineating the space around the equipment required for servicing. This will include pull space for internal parts, access for tools, handling equipment, and alignment requirements. The ICD will specify the weights of large removable parts, show the location of their centers of gravity, and describe installed lifting accommodations such as eyes and trunnions. An instruction manual will describe maintenance procedures for each piece of equipment to be handled for servicing. Each manual will contain suggestions for rigging and lifting of heavy parts and identify any special lifting or handling tools required.

All major handling equipment components (e.g., cranes, hoist, etc.) will be provided with an operating instruction and maintenance manual for reference and utilization by operations personnel. The handling equipment operating procedure will comply with the requirements of NUREG-0612, Subsection 5.1.1(2).

9.1.5.5 Safety Evaluations

The cranes, hoists, and related lifting devices used for handling heavy loads either satisfy the single-failure guidelines of NUREG-0612, Subsection 5.1.6, including NUREG-0554 or evaluations are made to demonstrate compliance with the recommended guidelines of Section 5.1, including Subsections 5.1.4 and 5.1.5.

The equipment handling components over the fuel pool are designed to meet the single-failure-proof criteria to satisfy NUREG-0554. Redundant safety interlocks and limit switches are provided to prevent transporting heavy loads other than spent fuel by the refueling bridge crane over any spent fuel that is stored in the spent-fuel storage pool.

A transportation routing study will be made of all planned heavy load handling moves to evaluate and minimize safety risks.

Safety evaluations of related light loads and refueling handling tasks in which heavy load equipment is also used are covered in Subsection 9.1.4.3.

The CRD and RIP maintenance equipment on the rotating bridge below the RPV used during refueling operation will be withdrawn through the personnel equipment tunnel to outside primary containment.

9.1.5.6 Inspection and Testing

Heavy load handling equipment is subject to the strict controls of Quality Assurance (QA), incorporating the requirements of 10CFR50 Appendix B. Components defined as essential to safety have an additional set of engineering specified "Quality Requirements" that identify safety-related features which require specific QA verification of compliance to drawing/specification requirements.

Prior to shipment, every lifting equipment component requiring inspection will be reviewed by QA for compliance and that the required records are available. Qualification load and performance testing, including nondestructive examination (NDE) and dimensional inspection on heavy load handling equipment, will be performed prior to QA acceptance. Tests may include load capacity, safety overloads, life cycle, sequence of operations and functional areas.

When equipment is received at the site, it will be inspected to ensure that no damage has occurred during transit or storage. Prior to use and at periodic intervals, each piece of equipment will be tested again to ensure that the electrical and/or mechanical functions are operational, including visual and, if required, NDE inspection.

Crane inspections and testing will comply with the requirements of ANSI B30.2 and NUREG-0612, Subsection 5.1.1(6).

9.1.5.7 Instrumentation Requirements

The majority of the heavy load handling equipment is manually operated and controlled by the operator's visual observations. This type of operation does not necessitate the need for a dynamic instrumentation system.

Load cells may be installed to provide automatic shutdown whenever threshold limits are exceeded for critical load handling operations to prevent overloading.

9.1.5.8 Operational Responsibilities

Critical heavy load handling in operation of the plant shall include the following documented program for safe administration and safe implementation of operations and control of heavy load handling systems:

(1) Heavy Load Handling System and Equipment Operating Procedures

(2) Heavy Load Handling Equipment Maintenance Procedures and/or Manuals

(3) Heavy Load Handling Equipment Inspection and Test Plans; NDE, Visual, etc.

(4) Heavy Load Handling Safe Load Paths and Routing Plans

(5) QA Program to Monitor and Assure Implementation and Compliance of Heavy Load Handling Operations and Controls

(6) Operator Qualifications, Training and Control Program

See Subsection 9.1.6.6 for COL license information.

9.1.6 COL License Information

9.1.6.1 New Fuel Storage Racks Criticality Analysis

The COL applicant shall provide the NRC a confirmatory criticality analysis for the inadvertent placement of a fuel assembly in other that prescribed locations, as required by Subsection 9.1.1.1.1.

9.1.6.2 Dynamic and Impact Analyses of New Fuel Storage Racks

The COL applicant shall provide the NRC confirmatory dynamic and impact analyses of the new fuel storage racks, as requested by Subsection 9.1.1.1.6.

9.1.6.3 Spent Fuel Storage Racks Criticality Analysis

The COL applicant shall provide the NRC a confirmatory critically analysis for the inadvertent placement of a fuel assembly in other than prescribed locations, as required by Subsection 9.1.2.3.1.

9.1.6.4 Spent Fuel Racks Load Drop Analysis

The COL applicant shall provide the NRC a confirmatory load drop analysis, as required by Subsection 9.1.4.3.

9.1.6.5 New Fuel Inspection Stand Seismic Capability

The COL applicant shall install the new fuel inspection stand firmly to the wall so that it does not fall into or dump personnel into the spent fuel pool during an SSE (Subsection 9.1.4.2.3.2).

9.1.6.6 Overhead Load Handling System Information

The COL applicant shall provide a list of all cranes, hoists, and elevators and their lifting capacities, including any limit and safety devices required for automatic and manual operation. In addition, for all such equipment, the COL applicant shall provide:

(1) Heavy load handling system operating and equipment maintenance procedures.

(2) Heavy load handling system and equipment maintenance procedures and/or manuals.

(3) Heavy load handling system and equipment inspection and test plans; NDE, visual, etc.

(4) Heavy load handling safe load paths and routing plans.

(5) QA program to monitor and assure implementation and compliance of heavy load handling operations and controls.

(6) Operator qualifications, training and control program.

9.1.6.7 Spent Fuel Racks Structural Evaluation

The COL applicant shall provide the NRC a confirmatory structural evaluation of the spent fuel racks, as outlined in Subsection 9.1.2.1.3.

9.1.6.8 Spent Fuel Racks Thermal-Hydraulic Analysis

The COL applicant shall provide the NRC confirmatory thermal-hydraulic analysis that evaluates the rate of naturally circulated flow and the maximum rack water exit temperatures, as required by Subsection 9.1.2.1.4.

9.1.6.9 Spent Fuel Firewater Makeup Procedures and Training

The COL applicant shall develop detailed procedures and operator training for providing firewater makeup to the spent fuel pool (Subsection 9.1.3.3).

9.1.6.10 Protection of RHR System Connections to FPC System

The COL applicant shall assure that the RHR system connections are adequately protected from the effects of pipe whip, internal flooding, internally generated missiles, and the effects of a moderate energy pipe rupture in the vicinity. (Subsection 9.1.3.3)

Table 9.1-1 Not Used

Table 9.1-2 Fuel Servicing Equipment

No.	Component Identification	Essential Classification *	Safety Classification †	Quality Group‡	Seismic Category*f*
1	Fuel Prep Machine	NE	N	E	NA
2	New Fuel Inspection Stand	PE	2	E	O
3	Channel Bolt Wrench	NE	N	E	NA
4	Channel-Handling Tool	NE	N	E	NA
5	Fuel Pool Vacuum Sipper	NE	N	E	NA
6	General-Purpose Grapple	NE	N	E	NA
7	Jib Crane	PE	2	E	O
8	Refueling Machine	PE	2	E	O
9	Channel-Handling Boom	NE	N	E	NA

* NE = Non-Essential
PE = Passive Essential

† N = Non-nuclear safety-related
2 = Safety Class

‡ E = Elements of 10CFR50 Appendix B are generally applied, commensurate with the importance of the requirement function.

f NA = No Seismic Requirements
O = Designed to hold its load in a SSE

Table 9.1-3 Reactor Vessel Servicing Equipment

No.	Essential Component Identification	Safety Classification*	Classification†	Quality Group‡	Seismic Category ƒ
1	Reactor Vessel Service Tools	NE	N	E	NA
2	Steamline Plug	NE	N	E	NA
3	Shroud Head Bolt Wrench	NE	N	E	NA
4	Head Holding Pedestal	NE	N	E	I
7	Head Stud Rack	NE	N	E	NA
6	Dryer and Separator Strongback	NE	N	E	NA**
7	Head Strongback Carousel	PE	2	E	NA
8	RIP Impeller Shaft	PE	N	E	NA
9	RIP Impeller Rack	NE	N	E	NA
10	Fuel Assembly Sampler	NE	N	E	NA

* NE = Non-Essential
PE = Passive Essential

† N = Non-nuclear safety-related
2 = Safety Class

‡ E = Elements of 10CFR50 Appendix B are generally applied, commensurate with the importance of the requirement function.

ƒ NA = No Seismic Requirements
I = Seismic Category I

** Dynamic analysis methods for seismic loading are not applicable, as this equipment is supported by the reactor service crane. Lifting devices have been designed with a minimum safety factor of 10 and undergo proof testing.

Table 9.1-4 Under-Reactor Vessel Servicing Equipment and Tools

No.	Equipment/Tool	Classification	Safety Class	Seismic Category
1	FMCRD Handling Equipment	NE	N	NA
	FMCRD Motor/Seal Assembly	NE	N	NA
2	Equipment Handling Platform	NE	N	NA
3	Water Seal Cap	NE	N	NA
4	Incore Flange Seal Test Plug	NE	N	NA
5	Key Bender	NE	N	NA
6	RIP Motor Servicing Equipment	NE	N	NA

Notes:

NA = No Seismic Requirements
N = Non-nuclear safety-related
NE = Non-Essential

Table 9.1-5 Tools and Servicing Equipment

Fuel Servicing Equipment	**In-Vessel Servicing Equipment (Continued)**
Channel Handling Boom	Blade Guides
Fuel Preparation Machines	Fuel Assembly Sampler
New Fuel Inspection Stand	Peripheral Orifice Grapple
Channel Bolt Wrenches	Orifice Holder
Channel Handling Tool	Peripheral Fuel Support Plug
Fuel Pool Vacuum Sipper	Fuel Support Plug Tool
Jib Crane	RIP Handling Tools
General-Purpose Grapples	
Refueling Machine	
Servicing Aids	**Refueling Equipment**
Pool Tool Accessories	Refueling Machine
Actuating Poles	Auxiliary Platform
General Area Underwater Lights	
Local Area Underwater Lights	
Drop Lights	
Underwater TV Monitoring System	
Underwater Vacuum Cleaner	
Viewing Aids	
Light Support Brackets	
Underwater Viewing Tube	
Reactor Vessel Servicing Equipment	**Storage Equipment**
Reactor Vessel Servicing Tools	Fuel Storage Racks
Steamline Plugs and Installation Tools	Channel Storage Racks
Shroud Head Bolt Wrenches	Defective Fuel Storage Containers
Head Holding Pedestals	In-Vessel Racks
Head Stud Rack	CR Guide Tube Storage Rack
Dryer-Separator Strongback	CR Storage Rack
Head Strongback/Carousel (including Stud Tensioners)	Defective Fuel Storage Rack
In-Vessel Servicing Equipment	**Under-Reactor Vessel Servicing Equipment**
Instrument Strongback	Fine Motion
Control Rod Grapple	Control Rod Drive Servicing Tools
Control Rod Guide Tube Grapple	CRD Hydraulic System Tools
Fuel Support Grapple	Water Seal Cap
Grid Guide	FMCRD Handling Equipment
Control Rod Latch Tool	Handling Platform
Instrument Handling Tool	Thermal Sleeve Installation Tool
Control Rod Guide Tube Seal	Incore Flange Seal Test Plug
Incore Guide Tube Seals	Key Bender
	Spring Reel
	Radiation Shield
	RIP Handling Equipment

Table 9.1-6 Reference Codes and Standards

Number	Title
ANS-N14.6	Standard for Special Lifting Devices for Shipping Containers Weighing (5 ton) or More for Nuclear Materials
ANSI B30.9	"Slings"
ANSI B30.10	"Hooks"
ANSI B30.2	Performance Standards for Overhead Electric Wire Rope Hoists
ANSI B30.16	Performance Standards for Air Wire Rope Hoists
ANSI B30.11	Overhead and Gantry Crane
CMAA70	Specifications for Electric Overhead Travelling Cranes
NUREG-0554	Single-Failure-Proof Cranes for Nuclear Power Plants
NUREG-0612	Control of Heavy Loads at Nuclear Power Plants

Table 9.1-7 Heavy Load Equipment Used to Handle Light Loads and Related Refueling Handling Tasks

Handling Operations/Equipment	Applicable Light Load Handling Subsections
Overhead Bridge Cranes	9.1.4.2.2
Reactor Building Crane	9.1.4.2.2
Fuel Servicing Equipment	9.1.4.2.3
Servicing Aids	9.1.4.2.4
Reactor Vessel Servicing Equipment	9.1.4.2.5
Steamline Plug	
Head Stud Rack	
Dryer/Separator Strongback	
Head Strongback/Carousel	
In-Vessel Servicing Equipment	9.1.4.2.6
Refueling Equipment	9.1.4.2.7 thru 9.1.4.2.10
Refueling Machine	
Vessel Platform	
Storage Equipment	
Under-Reactor Vessel Servicing Equipment	
Fuel Handling Service Tasks	
Reactor Shutdown Handling Tasks	
Drywell Head Removal	
Reactor Well Servicing	
Reactor Vessel Head Removal	
Dryer Removal	
Separator Removal	
Fuel Bundle Sampling	
Refueling	
Vessel Closure	

Table 9.1-8 Heavy Load Operations

Hardware Handling Tasks	Handling Systems*	Handling Equipment	In-Plant Location Elevation*
RPV Opening/Closing Operations:			
Drywell—Shield Blocks: Removal, storage and reinstallation	RBS	RB Crane Main Hoist	RB 26700 RF 26700
D/S Pool, Spent Fuel Pool, Fuel Cask Pit, Shield Plugs and Pool Seal Gates Removal, reinstallation and storage on the refueling floor on in the D/S Pool	RBS	RB Crane Main or Auxiliary Hoist, Slings and Strongbacks	RF 26700 D/S P 18700
Drywell Head Removal, storage and reinstallation	RBS	RB Crane Main Hoist Drywell Head Strongback	RF 26700 R/W 23700
Reactor Vessel Head Insulation Removal, storage and reinstallation	RBS	RB Crane Main Hoist Lifting Sling	RF 26700 R/W 18700
Reactor Vessel Head Removal, storage and reinstallation, includes handling stud tensioner studs, nuts, head strongback/carousel	RBS	RB Crane Main Hoist Auxiliary Hoist Head Strongback/ Carousel RPV Head Support Pedestal	RF 26700 RW 18700
Steam Dryer Removal, storage and reinstallation	RBS	RB Crane Main Hoist Dryer/Separator Strongback	RW 18700 D/SP 18700 IRV 14500
D/SP Cover Plates Removal, storage and reinstallation	RBS	RB Crane Auxiliary Hoist Lifting Slings	RF 26700
RPV Service Platform Removal, storage and reinstallation	RBS	RB Crane Auxiliary Hoist Lifting Slings	RF 26700 IRV 14500

Table 9.1-8 Heavy Load Operations (Continued)

Hardware Handling Tasks	Handling Systems*	Handling Equipment	In-Plant Location Elevation*
RPV Opening/Closing Operations: (Continued)			
Steam Plugs Temporary Tool Installation and removal	RBS	RB Crane Auxiliary Hoist 4447 N Chain Hoist Service Platform Refueling Machine	RF 26700 IRV 15500
Steam Separator/Shroud Head Removal, storage and reinstallation. Include unbolting shroud head bolts from Refueling Platform	RBS	RB Crane Main Hoist Dryer/Separator Refueling Machine	RW 18700 IRV 9500 D/SP 18700
Fuel Bundle Sampler Tool Positioning, sampling and removal, storage	RBS	Refueling Machine or RB Crane Auxiliary Hoists	RW 18700 IRV 9100
Refueling Operations:			
New-Fuel: Receive at G/F & lift to RF Receiving, inspection, remove outer container	RBS	RB Crane Auxiliary Hoist	RB 7300 RF 26700
Remove inner container and store fuel bundle in new fuel vault rack. Move fuel to new fuel inspection stand, inspect and return to storage.	RBS	RB Crane Auxiliary Hoist	RF 26700 NFS 18700 NFI 18700
Move new fuel from vault to fuel pool, storage of fuel channel fixtures. Channel new fuel and store. Move channeled fuel and load into reactor core.	RBS	RB Crane Auxiliary Hoist Refueling Machine Auxiliary Hoist Fuel Grapple	NFS 18700 FSP 14800 FCF 14800 RF 26700 RVC 9500
Spent-Fuel:			
Remove spent fuel from RPV core. Transport spent fuel to storage racks and/or fuel channel fixture remove channels and store spent fuel bundles	RBS	Refueling Machine Auxiliary Hoists Fuel Grapple Channel Handling Boom	RW 18700 FSP 14880 FCF 14800 RVC 9500

Table 9.1-8 Heavy Load Operations (Continued)

Hardware Handling Tasks	Handling Systems*	Handling Equipment	In-Plant Location Elevation*
Refueling Operations: (Continued)			
Fuel Cask:			
Receive, lift to refueling floor. Lower into cask washdown pit, washdown and move to load pit. Move spent fuel to cask load pit. Move loaded cask to cask washdown pit. Move cask to G/F for shipment.	RBS	RB Crane Main Hoist Auxiliary Hoist Refueling Machine Auxiliary Hoists Fuel Grapple	G/F 7300 RF 26700 FWP 18700 FLP 14800
Reactor Service Operations:			
Control Rod Blades Replacement including adjacent fuel bundles moving and storage in in-vessel rack and blade guide removal & installation. Fuel support removal and reinstallation.	RBS	Refueling Machine Auxiliary Hoists Fuel Grapple Fuel Support Grapple Control Rod Grapple	RVC 9500 RV 5300
Control Rod Guide Tube (CRGT) (Nonroutine) removal & replacement. Prior removal of control rod, fuel, fuel support and blade guide. See above.	RBS	Refueling Machine Auxiliary Hoists CRGT Grapple	RVC 5300
Internal Recirculation Pump Servicing: Removal of pump impeller shaft, diffuser, wear ring, piston ring and stretch tube through annulus between shroud and RPV I.D. wall. Move impeller to fuel storage pool.	RBS	Refueling Machine Auxiliary Hoist Service Platform Pump Impeller Grapple	FSP 18700 IRV 3000
Upper Drywell Servicing			
MSIVs and SRVs Servicing: removal, installation, and transportation for repair and calibrations from installed location to RCCV entrance and up to special service room area and return.	UDS SRM(C)	Monorail for servicing MSIVs and SRVs Monorail Hoist Transportation Cart Hatchway Hoist Wall Mount	UDW 12500 RB 12500 RB 18700 SRM 18700(c)

Table 9.1-8 Heavy Load Operations (Continued)

Hardware Handling Tasks	Handling Systems*	Handling Equipment	In-Plant Location Elevation*
Upper Drywell Servicing (Continued)			
	MSS	Steam Tunnel Crane Hoist Transportation Cart Hatchway Hoist Wall Mount	MST 12500 SRM 18700(c)
Lower Drywell Servicing:			
RIPs Motors Removal and installation and transport to service area and return during maintenance.	LDS SRM(B)	Jack Screws Transportation Cart Equipment Platform Turntable L/D RIP Hoist	L/D(–)2500 L/D(–)6700 SRM(–)6700 (C)
RIP Heat Exchangers Removal and installation for replacement or servicing	LDS RBS	Special Rigging Transportation Cart Equipment Platform L/D RIP Hoist	L/D(–)2500 L/D(–)6700 R/B(–)6700 R/B(–)7300
FMCRD Control Rod Drives Removal and installation from/to RPV for maintenance	LDS SRM(A)	FMCRD Remote Handling Machine	LDW/URV (–)6700
(1) Motor and seal replacement			
(2) FMCRD drive mechanism replacement	SRM(A)	FMCRD motor servicing machine	SRM(–)6700(A)
(3) Move CRD hardware to service room area for service	LDS	Lifting/handling device to move CRD hardware to service room area for service	LDW(–)6700 SRM(–)6700(A)
Neutron Monitor Sensor Replacement and servicing	LDS RBS	Refueling Platform Auxiliary Hoist Special Tools cask onto tunnel track.	RVC 5300

* See Table 9.1-9 for Legend.

Table 9.1-9 Legend for In-Plant Locations/Elevations

Elevations	Legend	Location/Description
18700	D/SP	Dryer/Separator Storage Pool
14800	FCF	Fuel Channeling Fixtures
18700 14800	FSP	Fuel Storage Pool
14800	FLP	Fuel Cask Load Pit
18700	FWP	Fuel Cask Wash Pit
7300	G/F	Ground Floor Equipment Access
18700 3000	IRV	Inside Reactor Vessel
(–)6700	LDW	Lower Drywell Area Receiving
7300	MST	Main Steam Tunnel Area
18700	NFI	New Fuel Inspection Stand
18700	NFS	New Fuel Storage Vault
33200 to 7300	RB	Reactor Building
26700	RF	Refueling Floor
9500	RVC	Reactor Vessel Core (TOP)
18700	RW	Reactor Well (TOP RPV)
18700(C) (–)6700(A) & (B)	SRM	Service Rooms: (a) CRD (b) RIP (c) MSIV & SRV
26,700 to 7300	D/W	Drywell Area
	LDS	Lower Drywell Servicing
	MSS	Main Steam Tunnel Servicing
	RBS	Reactor Building Servicing
	SSR	Special Service Rooms
	UDS	Upper Drywell Servicing

Table 9.1-10 Single-Failure-Proof Cranes

1. Reactor Building crane
2. Refueling machine crane

Table 9.1-11 Fuel Pool Cooling Heat Exchanger and Performance Data

Number of units	2
Seismic	Category I design and analysis
Types of exchangers	Horizontal U-tube/shell
Maximum primary/secondary side pressure	1.57 MPaG/1.37 MPaG
Design Condition	Normal heat load operating mode
Primary side (tube side) performance data:	
(1) Flow	250 m^3/h
(2) Inlet temperature	52° C maximum
(3) Allowable pressure drop	0.069 MPa Max.
(4) Exchanged heat	6.91 GJ/h
Secondary side (shell side) performance data:	
(1) Flow	280 m^3/h
(2) Inlet temperature	35°C maximum
(3) Allowable pressure drop	0.069 MPa Max.
(4) Type of cooling water	RCW water

Table 9.1-12 RHR-FPC Joint Heat Removal Performance Table (150 Hours Following Shutdown)

RHR-FCP Cooling Loops Combination	Maximum Heat Load *@ time = 0 t_0=150 hours	Pool Temp @ time = 0 t_0=150 hours	Maximum Pool Temp	Cooling Time to Max. Temp. From t=0
2-RHR Hx's + 2-FPC Hx's	46.1 GJ/h	52°C	52°C	t=0
2-RHR Hx's + 1-FPC Hx	46.1 GJ/h	52°C	52°C	t=0
1-RHR Hx + 2-FPC Hx's	46.1 GJ/h	52°C	54°C	≈8 h
1-RHR Hx + 1-FPC Hx	46.1 GJ/h	52°C	58°C	≈12 h

* Heat load based on BTP ASB 9-2

The following figures are located in Chapter 21:

Figure 9.1-1 Fuel Pool Cooling and Cleanup System P&ID (Sheets 1–3)

Figure 9.1-2 Fuel Pool Cooling and Cleanup System PFD (Sheets 1–2)

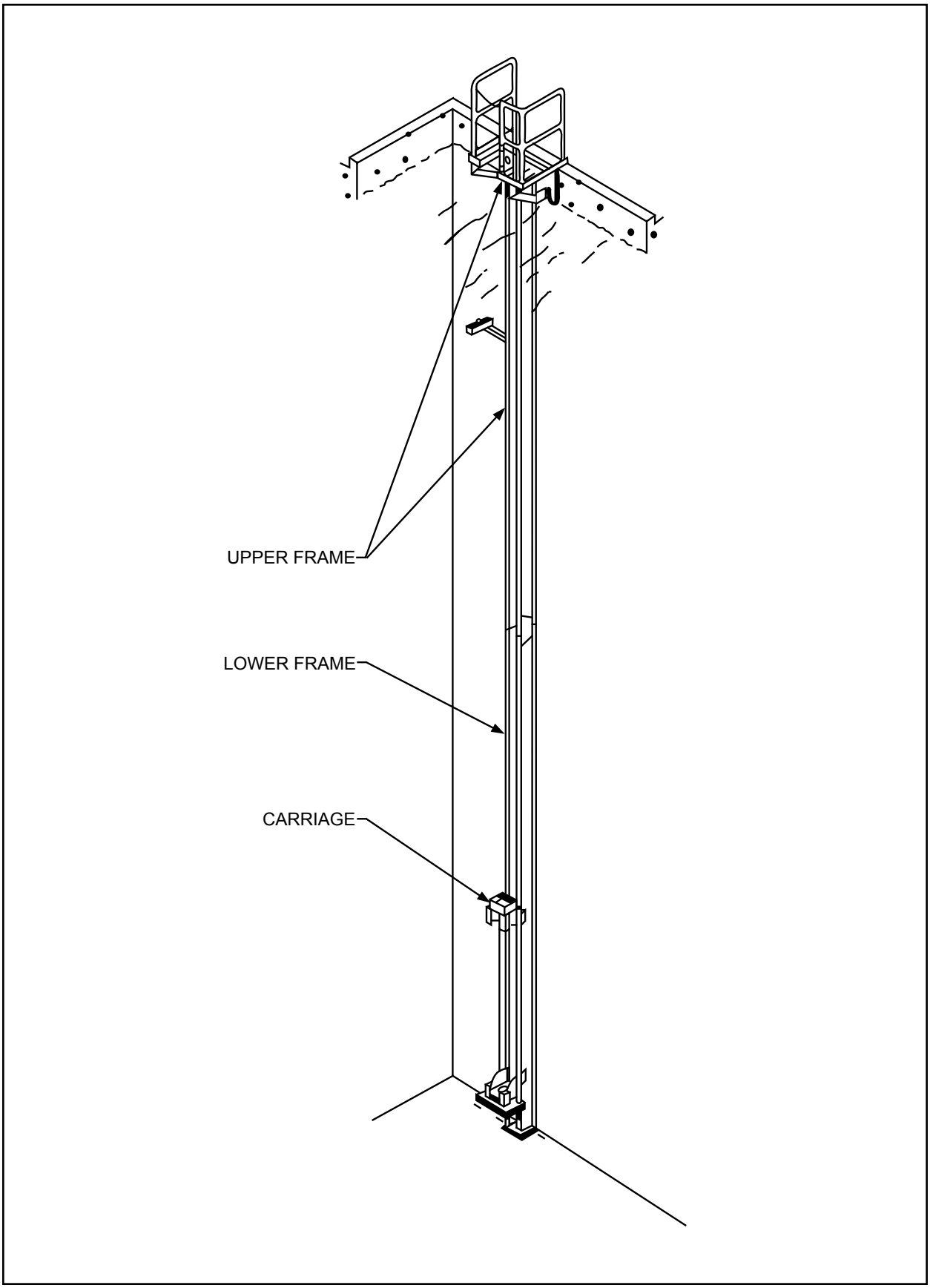

Figure 9.1-3 Fuel Preparation Machine Shown Installed in Facsimile Fuel Pool

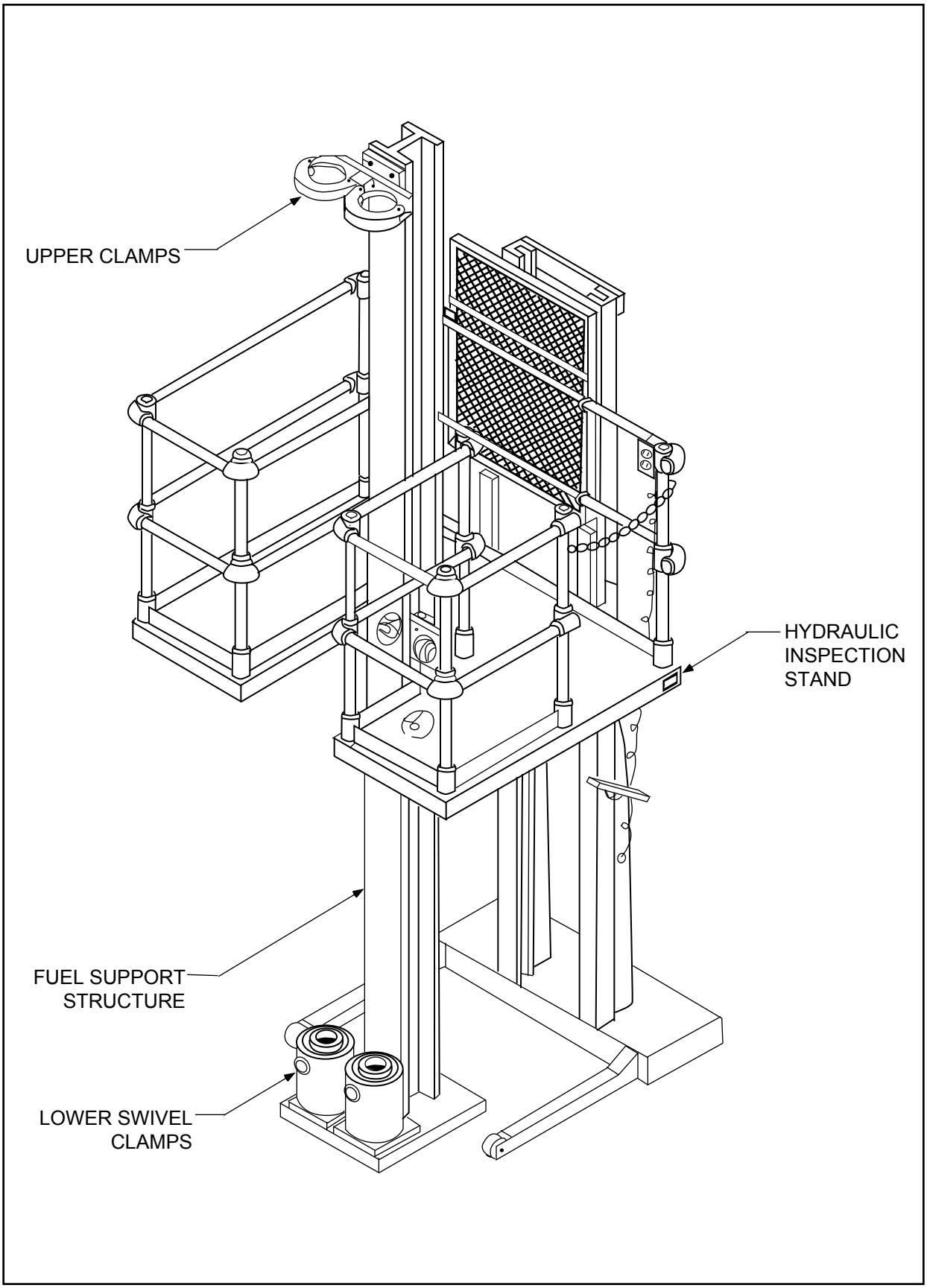

Figure 9.1-4 New-Fuel Inspection Stand

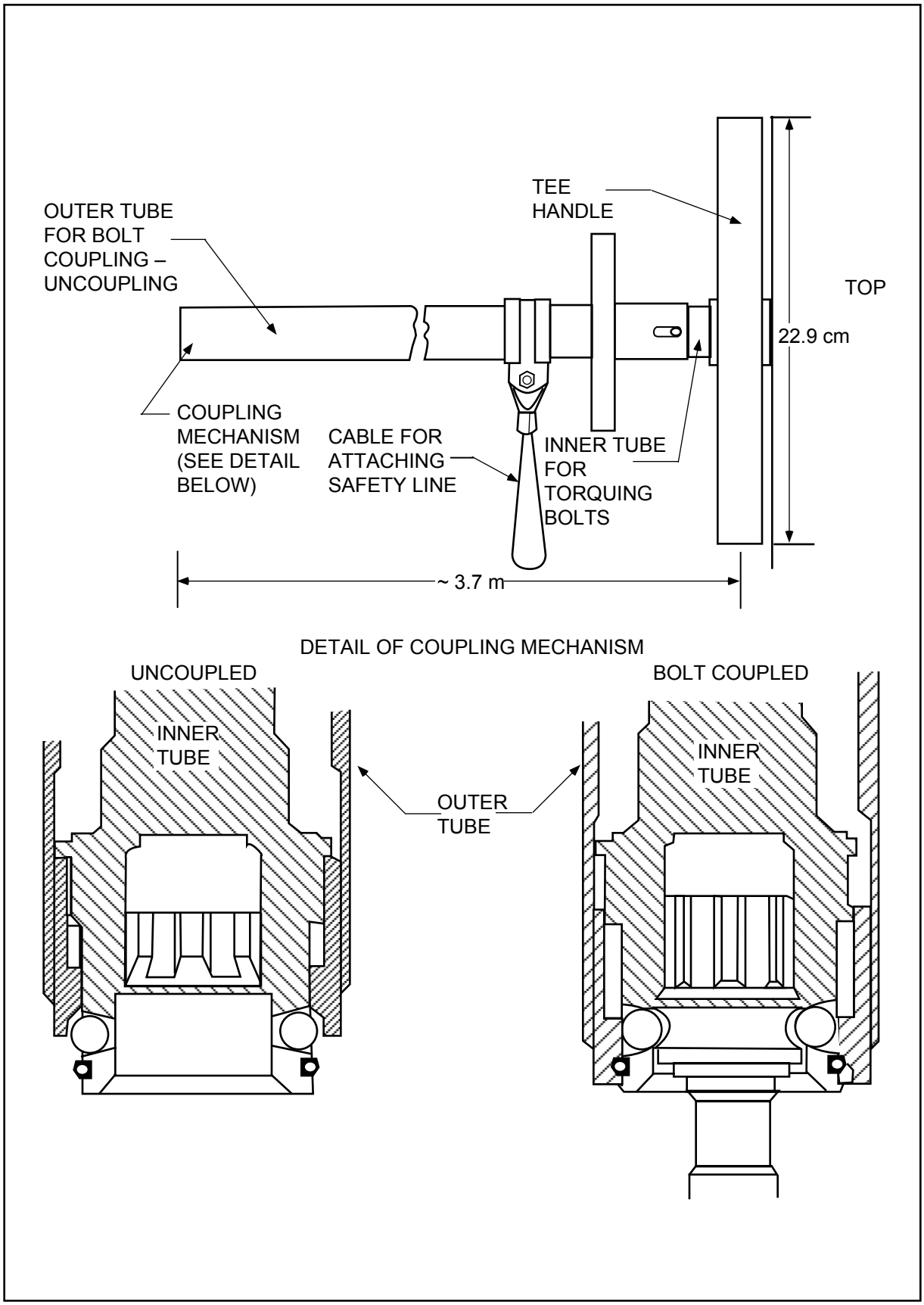

Figure 9.1-5 Channel Bolt Wrench

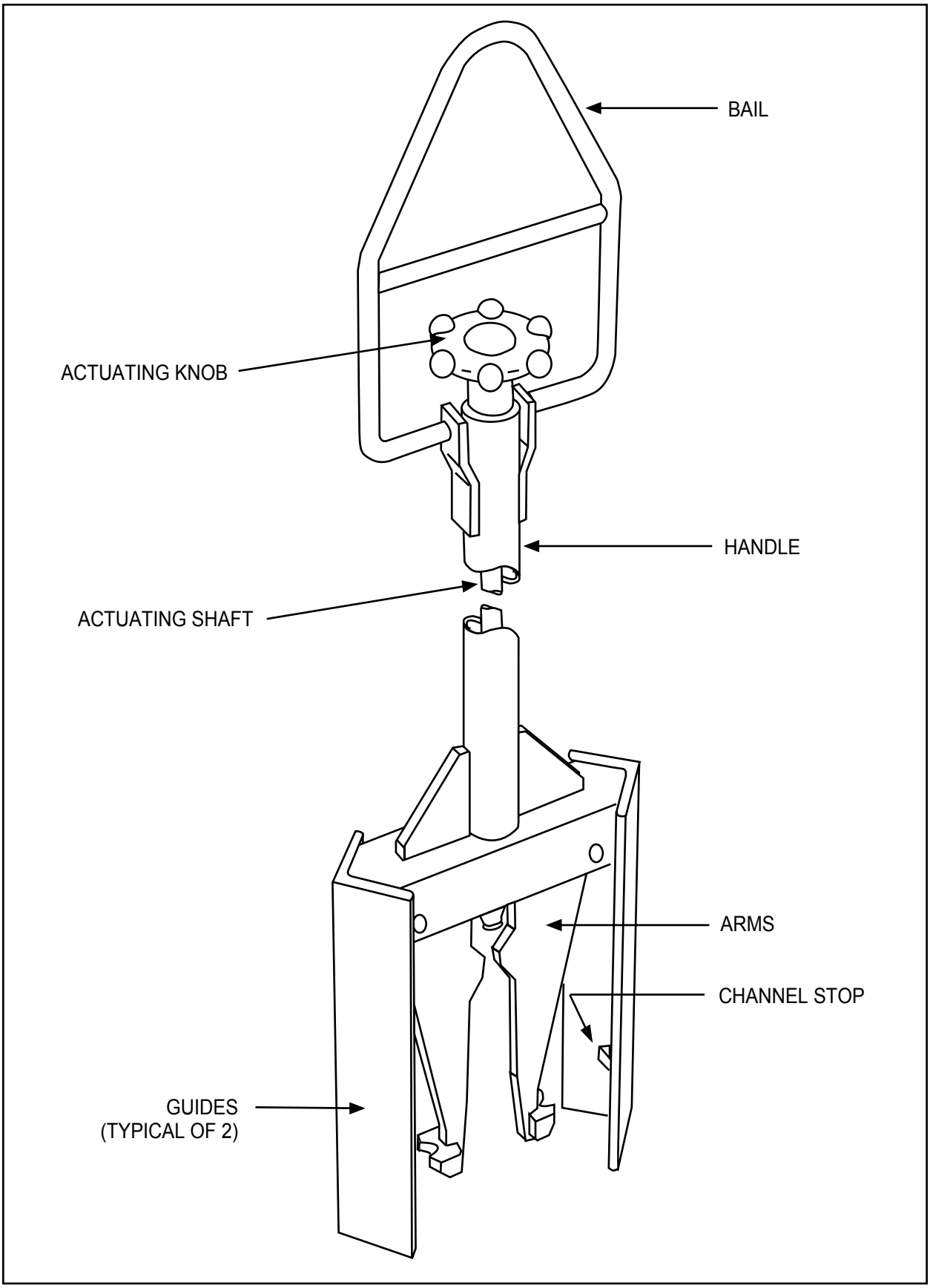

Figure 9.1-6 Channel-Handling Tool

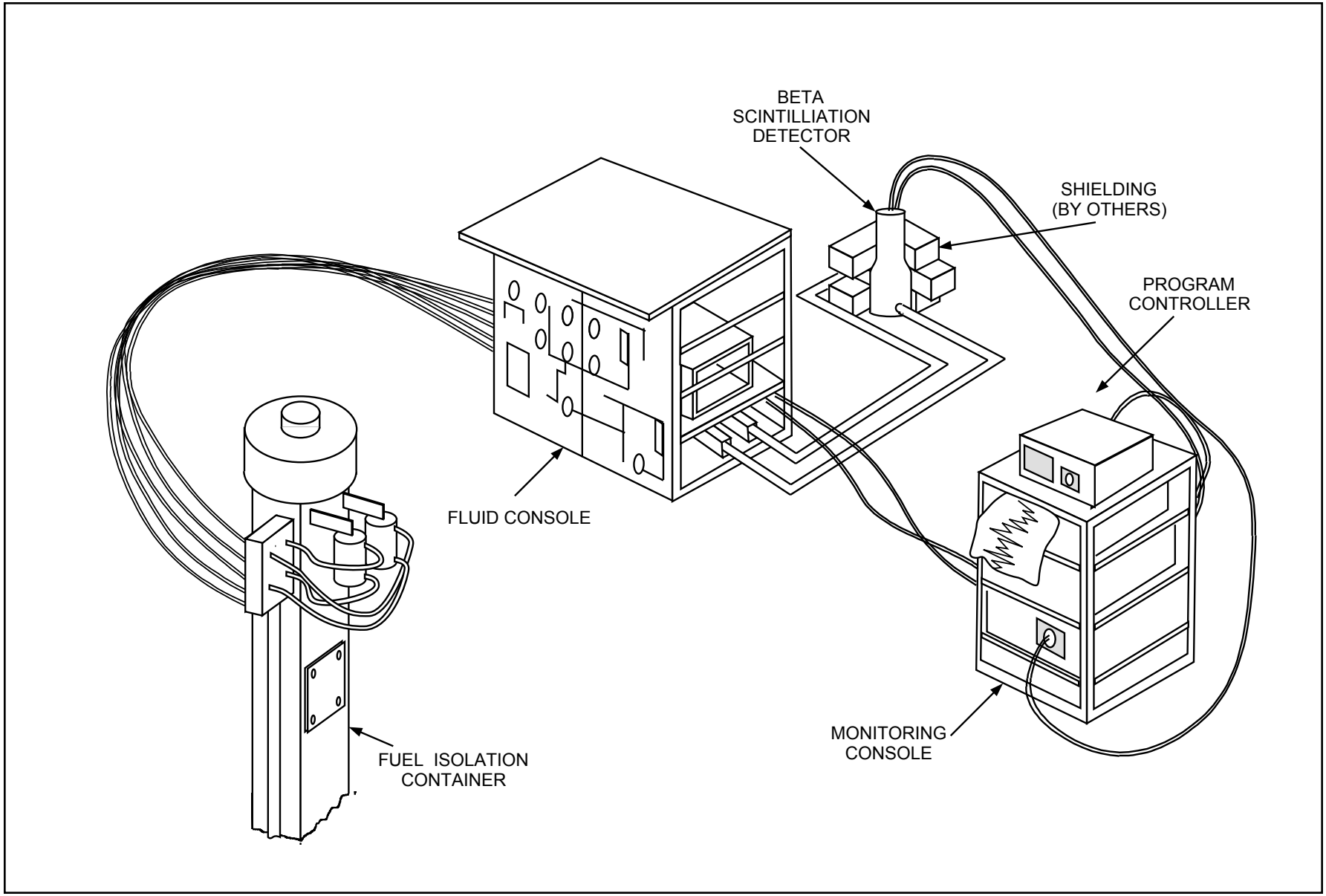

Figure 9.1-7 Fuel Pool Vacuum Sipper

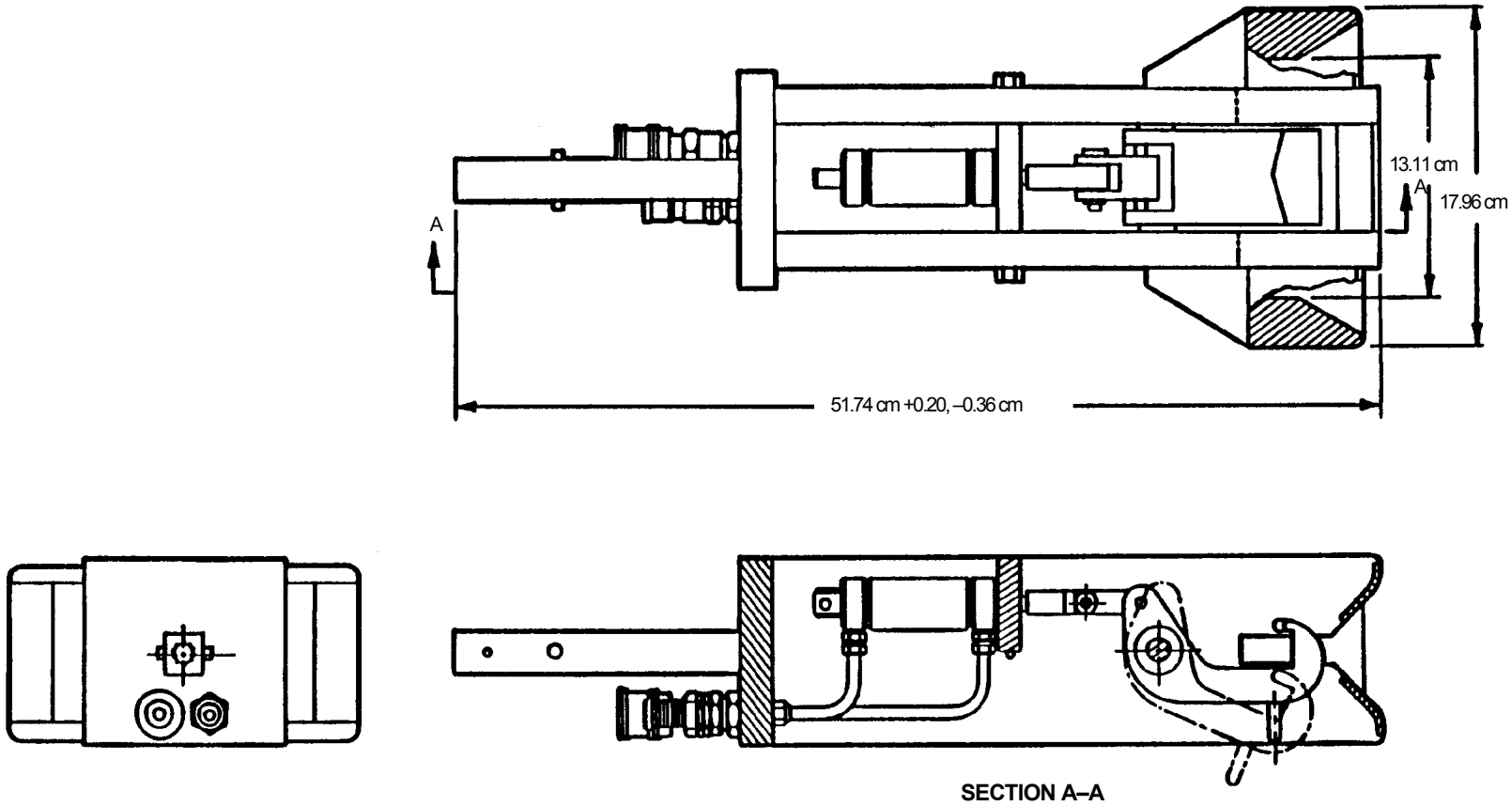

APPROX WEIGHT: 20.5 kg
OPERATING AIR PRESSURE: 549-686.5 kPa

Figure 9.1-8 General-Purpose Grapple

Figure 9.1-9 Not Used

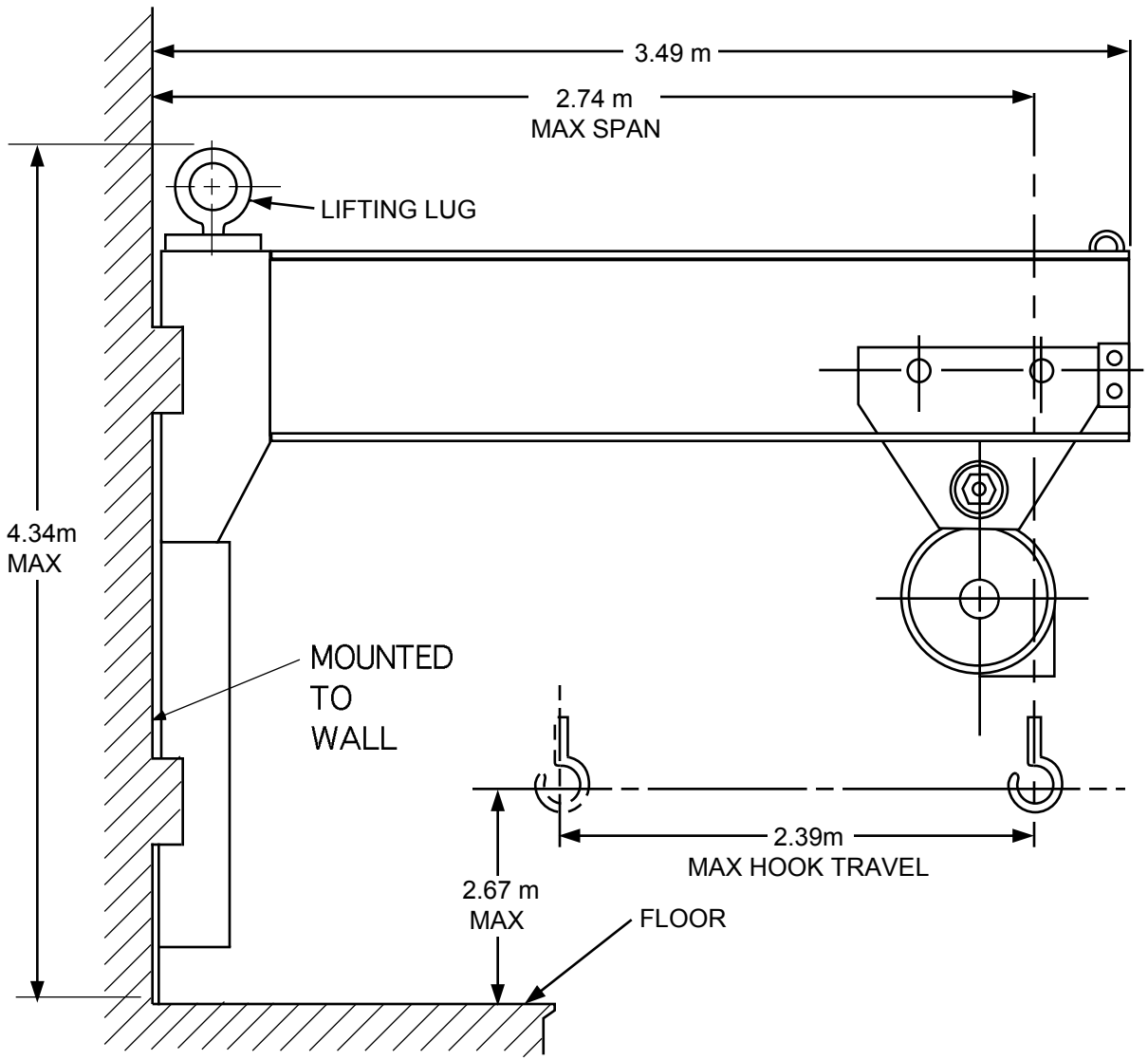

Figure 9.1-10 Jib Crane Channel-Handling Boom

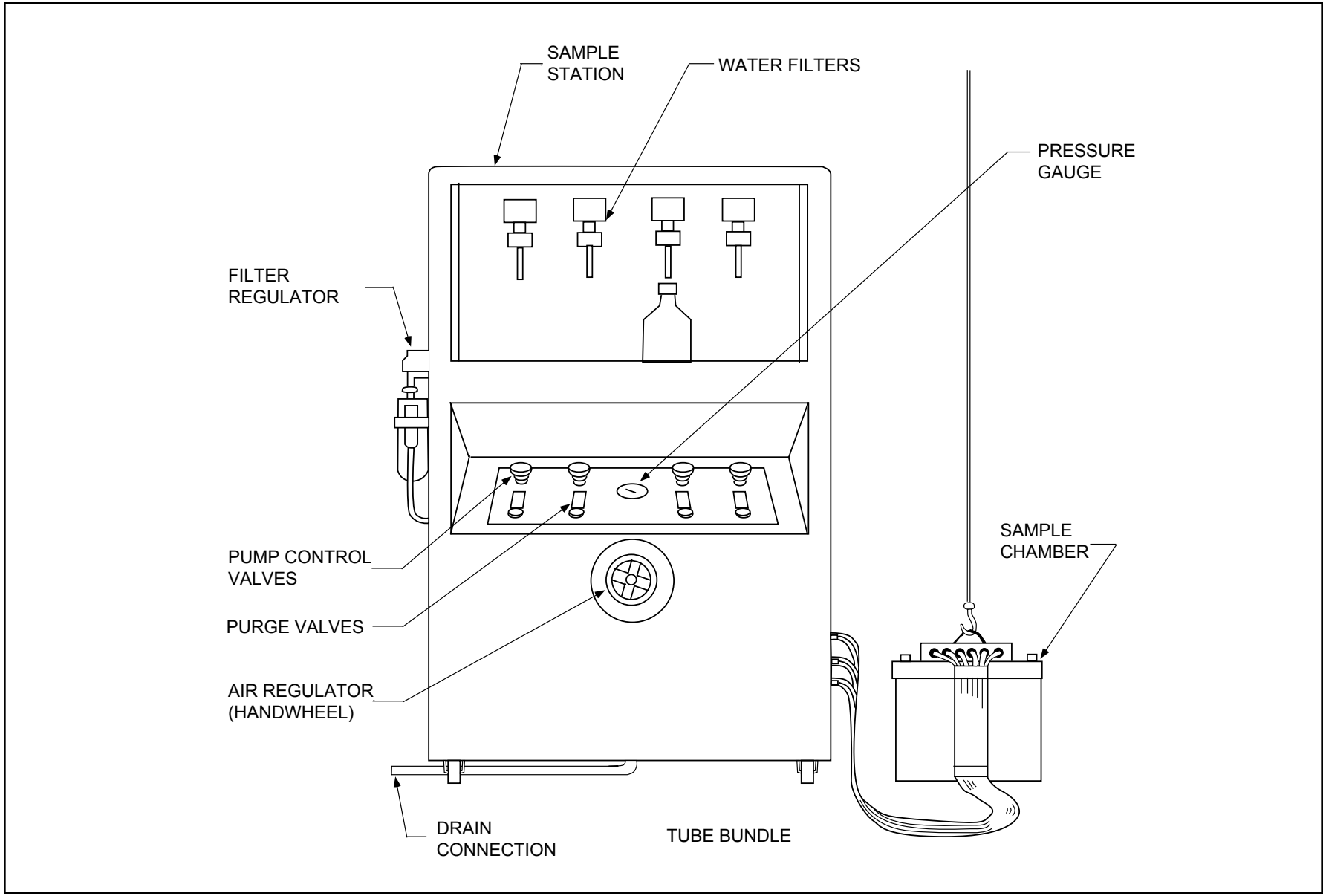

Figure 9.1-11 Fuel Assembly Sampler

The following figure is located in Chapter 21:

Figure 9.1-12 Plant Refueling and Servicing Sequence

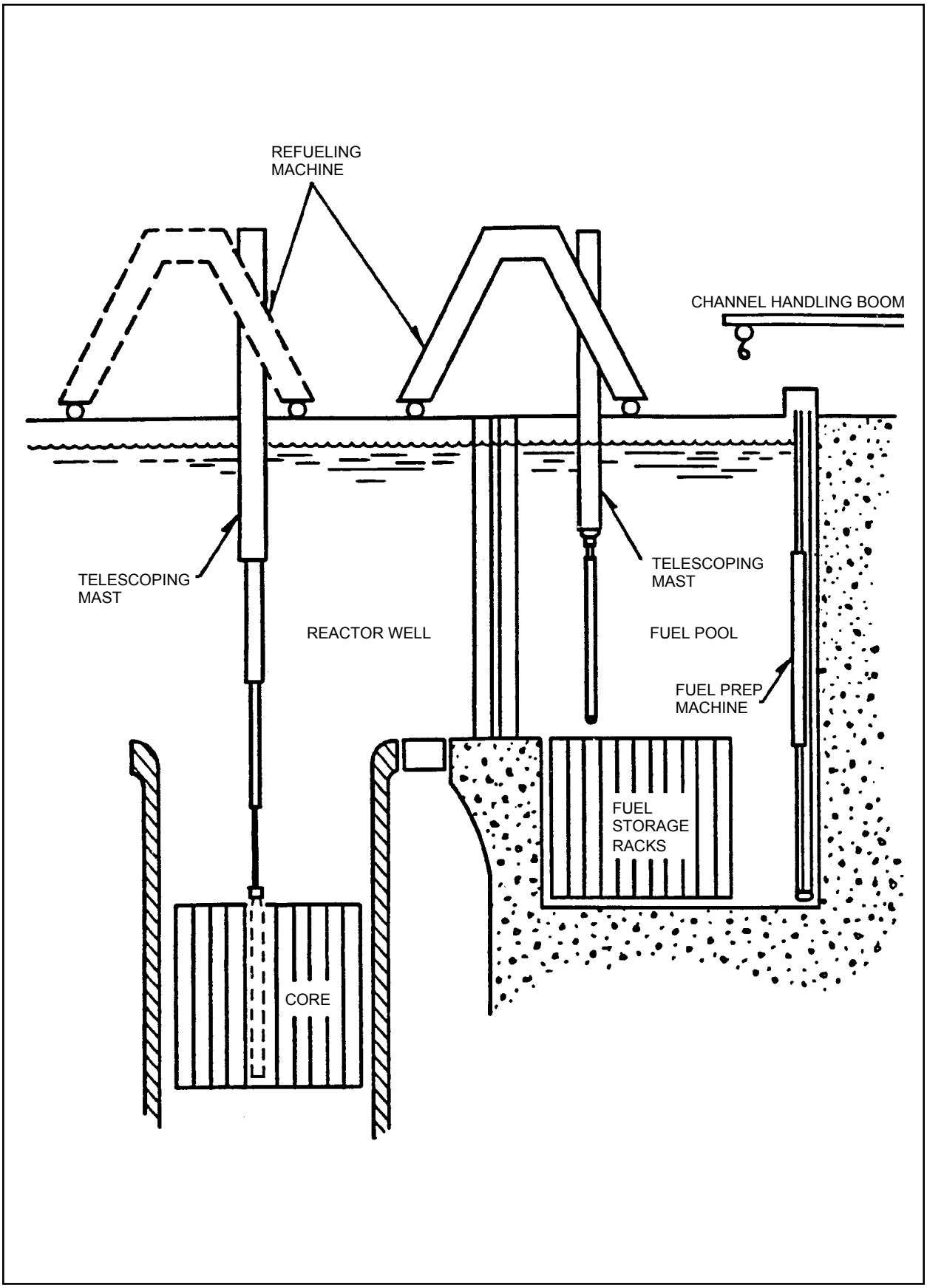

Figure 9.1-13 Simplified Section of Refueling Facilites

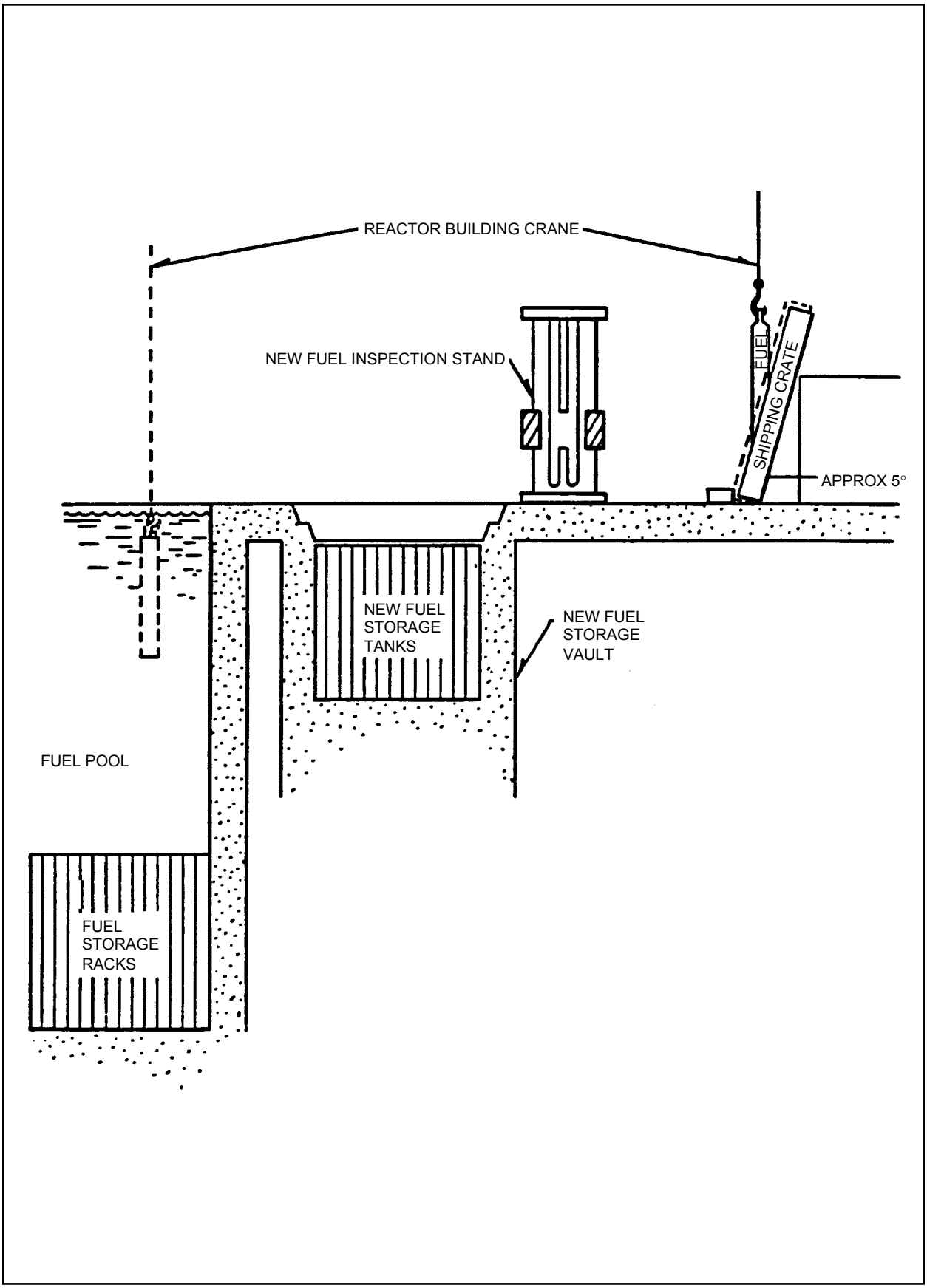

Figure 9.1-14 Simplified Section of New-Fuel Handling Facilities

9.2 Water Systems

9.2.1 Station Service Water System

The functions normally performed by the Station Service Water (SSW) System are performed by the systems discussed in Subsection 9.2.15.

9.2.2 Closed Cooling Water System

The functions normally performed by the Closed Cooling Water (CCW) System are performed by the systems discussed in Subsections 9.2.11, 9.2.12, 9.2.13, and 9.2.14.

9.2.3 Demineralized Water Makeup System

The functions normally performed by the Demineralized Water Makeup (DWM) System are performed by the systems discussed in Subsections 9.2.8, 9.2.9 and 9.2.10.

9.2.4 Potable and Sanitary Water System

9.2.4.1 Portions Within Scope of ABWR Standard Plant

Those portions of the Potable and Sanitary Water (PSW) System that are within the Standard Plant buildings (Subsection 1.1.2) are in the scope of the ABWR Standard Plant and are described in Subsections 9.2.4.1.1 and 9.2.4.1.6.

All portions of the PSW System which are outside the ABWR Standard Plant buildings are not in the scope of the ABWR Standard Plant.

A separate portion of the PSW, the non-radioactive drains, is described in Subsection 9.3.3.

9.2.4.1.1 Safety Design Bases

The PSW System has no safety-related function. Failure of the system does not compromise any safety-related system or component, nor does it prevent a safe shutdown of the plant.

9.2.4.1.2 Power Generation Design Bases

The PSW System shall be designed with no interconnections with systems having the potential for containing radioactive materials. Protection shall be provided through the use of air gaps, where necessary.

9.2.4.1.3 System Description

Part of the PSW System is a hot and cold potable water distribution system. It includes piping, valves, instrumentation, sinks, toilets and other facilities.

The PSW System includes a sanitary drainage system, which is designed to collect liquid wastes and entrained solids discharged by all plumbing fixtures located in the Standard Plant buildings, from areas with no sources of potentially radioactive wastes and conveys them to a sewage treatment facility.

Potable water is provided to flush the service water sides of the RSW and TSW heat exchangers whenever they are put into a wet standby condition.

9.2.4.1.4 Safety Evaluation

The PSW System has no interconnections with systems having the potential for containing radioactive materials.

9.2.4.1.5 Instrumentation and Alarms

The subsystems of the PSW System are provided with control panels located in the control building which are designed for remote manual and automatic control of the processes.

9.2.4.1.6 Tests and Inspections

An integrity test is performed on the PSW System upon completion of construction and before putting the system into operation.

The operability of the PSW System is demonstrated by use during normal system operation.

9.2.4.2 Portions Outside the Scope of ABWR Standard Plant

All portions of the PSW System which are outside the Standard Plant buildings are not in the scope of the ABWR Standard Plant. Subsections 9.2.4.2.1 through 9.2.4.2.8 provide conceptual design of these portions of the PSW as required by 10 CFR 52. The interface requirements for this system are part of the design certification.

The portions of the PSW System which are not in the scope of the ABWR Standard Plant shall meet all requirements in Subsections 9.2.4.1.1 through 9.2.4.1.6 and all following requirements. The following subsection provides a conceptual design and interface requirements for these portions of the PSW System and are a part of the design certification.

9.2.4.2.1 Safety Design Bases (Interface Requirements)

The PSW System has no safety-related function. Failure of the system does not compromise any safety-related system or component, nor does it prevent a safe shutdown of the plant.

9.2.4.2.2 Power Generation Design Bases (Interface Requirements)

(1) The PSW System is designed to provide to all buildings a minimum of 45 m^3/h of potable water during peak demand periods.

(2) Potable water is filtered and treated to prevent harmful physiological effects on plant personnel.

(3) The PSW System includes a sanitary drainage system which is designed to collect liquid wastes and entrained solids discharged by all plumbing fixtures located in areas with no sources of potentially radioactive wastes and conveys them to a sewage treatment facility.

(4) The PSW System includes a sewage treatment system which treats sanitary waste using the activated sludge biological treatment process. The aeration tanks are capable of receiving waste at a rate between 45 m^3/d and 185 m^3/d.

(5) The PSW System shall be designed with no interconnections with systems having the potential for containing radioactive materials. Protection shall be provided through the use of air gaps, where necessary.

9.2.4.2.3 System Description (Conceptual Design)

The PSW System includes a potable water system, a sanitary drainage system and a sewage treatment system.

9.2.4.2.3.1 Potable Water System

Filtered water flows by gravity from the filtered water storage tank of the Makeup Water Preparation (MWP) System into a potable water storage tank. A hypochlorite addition pump and tank are provided which adds sodium hypochlorite to the water entering the potable water storage tank. Two potable water pumps send water from the potable water storage tank to a hydropneumatic pressure tank. A hydropneumatic pressure tank and air compressor are provided to maintain adequate pressure within a potable water distribution piping system. Potable water is sent to a heater where it is heated and distributed throughout the plant.

9.2.4.2.3.2 Sanitary Drainage System

The sanitary drainage system collects liquid wastes and conveys them to the Sewage Treatment System. This system is installed in accordance with ANSI A40.8, National Plumbing Code, and applicable local or state codes.

9.2.4.2.3.3 Sewage Treatment System

The Sewage Treatment System (STS) is a concrete structure containing several compartments. The STS uses the activated sludge biological treatment process. The STS

includes a comminutor with a bypass screen channel, two aeration tanks, three final clarifiers, one chlorine contact tank, two aerobic digesters, three air blowers, a froth spray pump, a hypochlorite pump and related equipment. The system can be operated in two modes: extended aeration and contact stabilization.

9.2.4.2.4 System Operation (Conceptual Design)

9.2.4.2.4.1 Normal Operation

The potable water pumps take water from the potable water storage tank and discharges it into the potable water hydropneumatic pressure tank. Under automatic control, a low pressure switch starts one of the two potable water pumps when the hydropneumatic pressure tank water pressure falls below a specified limit. A pressure switch automatically starts the second potable water pump when a single pump is unable to maintain the tank pressure above a specified limit. When water level reaches a specified high level in the hydropneumatic pressure tank, a level switch automatically stops the potable water pumps. If high water level in the pressure tank is reached and the tank pressure is low, the air compressor is automatically started and is stopped at a specified pressure by a high pressure switch.

The air compressor controls are interlocked with the potable water pump controls so that the air compressor may operate only when the pumps are stopped and the hydropneumatic pressure tank water level is at the specified high limit.

Downstream of the hydropneumatic pressure tank, a branch sends potable water to a heater and a hot water distribution system.

Normally, the STS is operated in the extended aeration mode. The sanitary wastes enter the STS via the comminutor, in which any solids are shredded, and flows into the aeration tanks. In the aeration tanks, the waste liquids are continuously aerated. Occasionally, foaming occurs in the aeration tanks. A froth spray system is provided which uses processed sewage to control any froth which is present. The aeration tank contents are then transferred to the clarifiers where the sludge is allowed to settle. The clarified sewage passes into the chlorine contact tank for chlorination prior to being discharged via the cooling tower blowdown line. The settled sludge is sent to the aerobic digesters and disposed of offsite.

9.2.4.2.4.2 Abnormal Operation

The components of the PSW System are designed to meet the increased needs during refueling operations when additional people are onsite.

The STS may be operated in the contact stabilization mode to process the substantially higher waste water flow rates during outages. In this mode, a portion of the settled

sludge from the final clarifiers is aerated, sent to the aeration tanks and mixed with incoming sewage.

9.2.4.2.5 Evaluation of Potable and Sanitary Water System Performance (Interface Requirements)

The COL applicant shall analyze the PSW System to assure that the system meets all applicable regulatory requirements and is compatible with site conditions.

9.2.4.2.6 Safety Evaluation (Interface Requirements)

The PSW System has no interconnection with systems having the potential for containing radioactive materials. Protection includes, where necessary, the use of air gaps.

9.2.4.2.7 Instrumentation and Alarms (Interface Requirements)

The subsystems of the PSW System are provided with control panels located in the Control Building which are designed for remote manual and automatic control of the processes.

A flow proportioning controller is used to operate the hypochlorinator pump as water enters the PSW System. Pressure and level switches are provided to start and stop the potable water pumps and the air compressor. Low hydropneumatic tank pressure is alarmed. Low level in the hypochlorite feed tank is alarmed.

The minimum instrumentation requirements for the STS are a treated effluent sewage flow meter and a common air blower discharge pressure gauge.

9.2.4.2.8 Tests and Inspections (Interface Requirements)

Drainage piping is hydrostatically tested to the equivalent of a 3-meter head of water for a minimum of 15 minutes.

The operability of all other parts of the PSW System is demonstrated by use during normal system operation.

9.2.5 Ultimate Heat Sink

This subsection provides a conceptual design of the ultimate heat sink (UHS) as required by 10CFR52. The interface requirements for the UHS are part of the design certification.

9.2.5.1 Safety Design Bases (Interface Requirements)

(1) The UHS is designed to provide sufficient cooling water to the Reactor Service Water (RSW) System to permit safe shutdown and cooldown of the unit and

maintain the unit in a safe shutdown condition. The RSW water temperature at the inlet to the RCW/RSW heat exchangers is not to exceed 35°C during a LOCA.

(2) In the event of an accident, the UHS is designed to provide sufficient cooling water to the RSW System to safely dissipate the heat for that accident. The amount of heat to be removed is provided in Tables 9.2-4a,9.2-4b and 9.2-4c.

(3) The UHS is sized so that makeup water is not required for at least 30 days following an accident and design basis temperature and chemistry limits for safety-related equipment are not exceeded.

(4) The UHS is designed to perform its safety function during periods of adverse site conditions, resulting in maximum water consumption and minimum cooling capability.

(5) The UHS is designed to withstand the most severe natural phenomenon or site-related event (e. g., SSE, tornado, hurricane, flood, freezing, spraying, pipe whip, jet forces, missiles, fire, failure of non-Seismic Category I equipment, flooding as a result of pipe failures or transportation accident), and reasonably probable combinations of less severe phenomena and/or events, without impairing its safety function.

(6) The safety-related portion of the UHS shall be designed to perform its required cooling function assuming a single active failure in any mechanical or electrical system.

(7) The UHS is designed to withstand any credible single failure of man-made structural features without impairing its safety function.

(8) All safety-related heat rejection systems shall be redundant so that the essential cooling function can be performed even with the complete loss of one division. Single failures of passive components in electrical systems may lead to the loss of the affected pump, valve or other components and the partial or complete loss of cooling capability of that division but not of other divisions.

(9) The UHS and any pumps, valves, structures or other components that remove heat from safety systems shall be designed to Seismic Category I and ASME Code, Section III, Class 3, Quality Assurance B, Quality Group C, IEEE-279 and IEEE-308 requirements.

(10) The safety-related portions of the UHS shall be mechanically and electrically separated.

(11) The UHS is designed to include the capability for full operational inspection and testing.

9.2.5.2 Power Generation Design Bases (Interface Requirements)

The UHS is designed to remove the heat load of the RSW System during all phases of normal plant operation. These heat loads are provided in Tables 9.2-4a, 9.2-4b and 9.2-4c. However, it is not a requirement that the UHS temperature be assumed to be the maximum temperature for all operating modes during normal plant operations.

9.2.5.3 System Description (Conceptual Design)

The UHS is a spray pond which serves the safety-related functions of providing cooling water and acting as a heat sink for the RSW System during accident conditions. The spray pond also serves as a heat sink during normal operation by accepting the heat load of the RSW System.

There are no other heat loads associated with the spray pond in addition to the RSW System.

9.2.5.3.1 General Description

The UHS is a highly reliable, Seismic Category I spray pond that provides that an adequate source of cooling water is available at all times for reactor operation, shutdown cooling and for accident mitigation. The RSW System (Subsection 9.2.15) receives cooling water from the UHS and returns the water to the spray pond via the spray networks.

9.2.5.3.2 Spray Pond Description

The spray pond is of Seismic Category I design, excavated below grade and sized for a water volume adequate for 30 days of cooling under design basis conditions.

The pond is lined to minimize seepage. The pond is provided with a Seismic Category I overflow weir to accommodate normal water level fluctuations and an emergency spillway to limit the maximum water level in the pond during maximum precipitation conditions.

Six spray networks are arranged in the pond to provide cooling for the RSW return water. Two spray networks are assigned to each division and are mechanically separated from the other divisional networks. The networks and their supply piping are suspended above the pond surface on reinforced concrete columns.

9.2.5.3.3 Spray Pond Pump Structure

The spray pond pump structure houses the RSW pumps and associated piping and valves (Subsection 9.2.15). The pump structure is located on the edge of the spray pond. Openings are provided in front of the pump structure to allow pond water to flow

into the wet pits where the pump suctions are located. Each pump is located in its own bay. A removable screen is placed at the entrance of each bay.

The pump structure is designed to provide adequate net positive suction head for the pumps.

HVAC equipment maintains necessary conditions for proper operation of the equipment in the pump structure.

9.2.5.3.4 System Components

Six spray networks are provided. During normal plant operation, three of the networks are in operation. When the heat load is increased during cooldown, shutdown or accident, the RSW return water will be sent to all six networks. Network header piping is sized for proper flow rates to all nozzles in the network. Piping is sloped to allow complete drainage of the networks and network supply piping to minimize corrosion and prevent freezing.

The spray nozzles are of corrosion-resistant materials and designed to provide good thermal performance while minimizing drift loss. The system is designed so that the pressure drop across the nozzles for proper spray performance is achieved for all anticipated modes of RSW System operation. The nozzles are designed to be resistant to clogging.

Cold weather bypass lines are provided for each RSW return line to allow bypassing the spray networks and returning the heated water directly to the pond.

Makeup water to the spray pond is supplied via the power cycle heat sink makeup line. A makeup water valve is provided which is controlled by a level detector in the spray pond to maintain proper water level. The makeup water valve can also be operated remotely when desired to maintain desired water level or quality. Failure of the makeup water system shall not adversely affect the operation of the UHS.

A blowdown weir and line are provided which conducts blowdown to the power cycle heat sink blowdown line. Blowdown from the spray pond occurs to remove excess water from precipitation and to maintain water quality control. Failure of the blowdown system shall not adversely affect the operation of the UHS.

9.2.5.4 System Operation (Conceptual Design)

9.2.5.4.1 Normal Operation

Normally, the RSW System has one pump per division in operation. Return water from each RSW division is sent to the UHS where it is routed to three of the six spray networks. The operators may change the operating RSW pumps and the UHS spray networks when desired.

During operation without spray pond blowdown, the concentration of scale-forming constituents in the water would increase due to evaporation impairing heat exchanger performance. Also, biofouling may occur under some conditions. To prevent these adverse conditions from occurring, chemical addition equipment may be provided or blowdown may be increased by increasing the makeup rate. Sufficient spray pond water inventory is provided such that scale-producing agents, such as calcium sulfate, do not reach concentrations that might cause scaling during the 30-day post-accident period when no makeup or blowdown is assumed.

9.2.5.4.2 Cold Weather Operation

The spray pond is designed to perform its safety function with an initial ice layer on the pond surface. During icing conditions, RSW System return flow to the pond is initially sent to the cold weather bypasses. These bypasses direct the warm water toward the ends of the pond under any ice that may be present to allow the return water to circulate and mix with the water in the pond. Any ice layer present on the pond surface will melt. Once a hole is formed in the ice layer, a return path for spray water is available and the spray networks may be used if needed.

9.2.5.5 Spray Pond Thermal Performance (Conceptual Design)

9.2.5.5.1 Design Meteorology

The COL applicant shall obtain and use conservative site-specific design meteorological data in the detailed design of the spray pond.

9.2.5.5.2 Spray Pond Water Requirements

The COL applicant shall determine the water requirements used in selecting spray pond design volume and used in the pond thermal performance analysis. These requirements include:

(1) Evaporation Due to Plant Heat Load

(2) Natural Evaporation

(3) Drift Loss

(4) Seepage

(5) Sedimentation

(6) Water Quality

(7) Minimum Water Level for Operation

9.2.5.6 Evaluation of UHS Performance (Interface Requirements)

The COL applicant shall analyze the UHS performance to assure that UHS is adequate for 30 days of cooling without makeup or blowdown and that the cooling water temperature does not exceed the design limit for design basis heat input and site conditions.

9.2.5.7 Safety Evaluation (Interface Requirements)

9.2.5.7.1 Thermal Performance

The COL applicant shall demonstrate by analysis that the UHS is capable of providing cooling water within the design temperature limit for at least 30 days for the design basis event using conservative meteorology and assumptions.

9.2.5.7.2 Effects of Severe Natural Events or Site-Related Events

The COL applicant shall demonstrate by analysis that the UHS is capable of fulfilling its safety function concurrent with any of the following events: SSE, tornado, flood, drought, transportation accident, or fire.

9.2.5.7.3 Freezing Considerations

The COL applicant shall demonstrate by analysis that the UHS is designed for operations under any freezing conditions that may occur.

9.2.5.8 Conformance to Regulatory Guide 1.27 and 1.72 (Interface Requirement)

The COL applicant shall demonstrate that the UHS meets all applicable requirements of Regulatory Guide 1.27.

If any spray pond piping is made from fiberglass-reinforced thermosetting resin, the COL applicant shall provide information to show that all applicable requirements of Regulatory Guide 1.72 are met.

9.2.5.9 Instrumentation and Alarms (Interface Requirement)

UHS low water level (if applicable) and high water temperature are provided and alarmed in the control room. UHS surface water temperature indication is provided (if it can differ appreciably from the bulk temperature) in the control room.

UHS makeup and blowdown volumes (if applicable) are indicated by flow totalizers located in the makeup and blowdown lines.

Any components required for UHS system operation in Divisions A and B shall be operated from the Remote Shutdown System.

9.2.5.10 Tests and Inspections (Interface Requirements)

The COL applicant shall prepare and perform a preoperational test program in accordance with the requirements of Chapter 14. During normal operation the system shall have capability for full operational testing and inspection.

9.2.6 Condensate Storage Facilities and Distribution System

The functions of the storing and distribution of condensate are described in Subsection 9.2.9.

9.2.7 Plant Chilled Water System

The functions of the Plant Chilled Water (PCW) System are performed by the systems described in Subsections 9.2.12 and 9.2.13.

9.2.8 Makeup Water (MWP) Preparation System

This subsection provides a conceptual design of the Makeup Water Preparation System as required by 10CFR52. The interface requirements for this system are part of the design certification.

9.2.8.1 Safety Design Bases (Interface Requirements)

The MWP System has no safety-related function. Failure of the system does not compromise any safety-related system or component, nor does it prevent a safe shutdown of the plant.

9.2.8.2 Power Generation Design Bases (Interface Requirements)

(1) The MWP System consists of two divisions capable of producing at least 45 m^3/h of demineralized water each.

(2) Storage of demineralized water shall be at least 760 m^3.

(3) The quality of the demineralized water shall meet the requirements in Table 9.2-2a.

(4) Demineralized water shall be provided at a minimum flow rate of approximately 135 m^3/h at a temperature between 10° to 38°C.

(5) The MWP System is not connected to any system having the potential for containing radioactive material.

(6) The MWP System provides 45 m^3/h of filtered water to meet maximum anticipated peak demand periods for the PSW System.

(7) Any purified water storage tank located outdoors shall be provided with adequate freeze protection and adequate diking and other means to control spill and leakage.

9.2.8.3 System Description (Conceptual Design)

The MWP System consists of both mobile and permanently installed water treatment systems.

The permanently installed system consists of a well, filters, reverse osmosis modules and demineralizers which prepare demineralized water from well water. The demineralized water is sent to storage tanks until it is needed. The components of the MWP System are listed in Table 9.2-15 and the system block flow diagram is in Figure 9.2-10.

While it is planned to install both permanent divisions, only one division may be installed if plant water requirements and economic conditions indicate that the second division will not be needed.

Mobile water treatment systems will be used before the permanent system is installed and later if water requirements exceed the capacity of the permanent system or if economic condition make use of mobile equipment attractive compared to operating and maintaining the permanent system.

9.2.8.3.1 Well System

A well, water storage tank and two well water forwarding pumps are provided which can produce sufficient water to meet the concurrent needs of the MWP System and the PSW System.

9.2.8.3.2 Pretreatment System

Two dual media filters are provided in parallel which are backwashed when needed using one of two backwash pumps and water from a filtered water storage tank. This tank is provided with a heater to maintain a water temperature of at least 10°C at all times. Water may be sent from the filtered water storage tank to the PSW System or to the next components of the MWP System.

9.2.8.3.3 Reverse Osmosis Modules

Chemical addition tanks, pumps and controls are provided to add sodium hexametaphosphate and sodium hydroxide to the filtered water.

Four high pressure, horizontal multistage reverse osmosis (RO) feed pumps provide a feed pressure of approximately 3.14 MPaG. Reverse osmosis membranes are arranged in two parallel divisions of two passes each with the permeate of the first passes going to the inlet of the second passes. The reject or brine from the first passes are sent to the

cooling tower blowdown by gravity. A chemical addition tank, two pumps and controls are provided to add sodium hydroxide to the permeate of the first pass. The reject from the second passes is recycled to the RO feed pump suction line. The permeate from the second pass is sent to a RO permeate storage tank.

9.2.8.3.4 Demineralizer System

Two demineralizer feed pumps are provided in each parallel division. Three mixed bed demineralizers are provided in parallel in each division with two normally in operation with the third in standby. The demineralized water is monitored and sent to the demineralized water storage tanks.

9.2.8.3.5 Demineralized Water Storage System

Two demineralized water storage tanks are provided with a heater to maintain a water temperature of at least 10°C at all times. Three demineralized water forwarding pumps are provided to send water to the MUWP System.

9.2.8.3.6 Makeup Water Preparation Building

A building is provided for all of the subsystems listed above except for the well water storage tank and the demineralized water storage tanks which are located outdoors. The building is provided with a heating system capable of maintaining a temperature of at least 10°C at all times.

The building does not contain any safety-related structures, systems or components. The MWP System shall be designed so that any failure in the system, including any that cause flooding, shall not result in the failure of any safety-related structure, system or component.

The building has a large open area about 7.6m by 12m with truck access doors and services for mobile water processing systems. These services include electric power, service air, connections to the water storage tanks and a waste connection. This area will be used for mobile water treatment systems or storage.

9.2.8.4 System Operation (Conceptual Design)

9.2.8.4.1 Normal Operation

During normal operation, the well pump is controlled by a water level controller to keep the well water storage tank full. The well water forwarding pumps are controlled by a water level controller to keep the filtered water storage tank full. Normally, one filter will be operating with the other filter in standby. The second filter is started from the Control Building or is automatically started by a low water level in the filtered water storage tank. When any filter develops a high pressure drop, it is isolated and any

standby filter is put into operation. One of the two backwash pumps is operated to backwash the filter. The backwash is sent to the cooling tower blowdown by gravity.

Sodium hexametaphosphate is added to control calcium sulfate or other fouling in the RO membranes and sodium hydroxide is added to adjust the pH for RO treatment.

The RO feed pumps are controlled by a water level controller which keeps the RO permeate storage tank full. These pumps feed the water through both RO passes. The RO membranes are of the thin film composite type. The first pass permeate, which becomes feed for the second pass, has a pressure of about 1.37 to 1.77 kPaG. Sodium hydroxide is added to the first pass permeate to adjust the pH to improve dissolved solids rejection in the second pass.

The demineralizer feed pumps are controlled by a water level controller in the demineralized water storage tanks. Each demineralizer contains 1.1 m^3 of ion exchange resin in a cation/anion ratio of 1 to 2. When the effluent quality of a demineralizer becomes unsatisfactory, it is automatically removed from operation and the standby demineralizer is automatically put into operation. The exhausted resins are regenerated offsite.

The demineralized water forwarding pumps are controlled by a pressure switch in their discharge piping. Normally, one pump is operated to maintain a specified system pressure. When the pressure drops below a specified pressure, the second pump is automatically put into operation until system pressure returns to the normal range. If this does not occur, the third pump is automatically put into operation.

9.2.8.4.2 Abnormal Operation

During the early construction period and at certain times later, the Makeup Water Preparation System may either not be installed or may not be in operation. Also, there may be times when demineralized water requirements exceed the production capacity. During these periods, mobile water treating systems will be used. They will be transported to the site by truck and will enter the Makeup Water Preparation Building through large doors. When no longer required, they will be removed.

9.2.8.5 Evaluation of Makeup Water System Preparation Performance (Interface Requirements)

The COL applicant shall analyze the raw water quality and availability and the required makeup water quality and amounts to assure that these requirements can be met. Any deficiencies in either quality or production capability shall be met with mobile water treating systems.

9.2.8.6 Safety Evaluation (Interface Requirements)

The MWP System is not connected to any systems having the potential for containing radioactive material.

9.2.8.7 Instrumentation and Alarms (Interface Requirements)

One division of MWP components is normally in operation. The components of the standby division are automatically placed into operation upon receiving a low level signal from their downstream water storage tank.

The following shall be displayed and alarmed locally and in the control building:

- Water level in all water storage tanks
- Running status of all pumps
- System pressures and differential pressures associated with the filters and RO modules
- Water quality monitors, including conductivity, pH, turbidity and silica analyzers

All water storage tanks are provided with low-low water level switches which stop the forwarding pumps for that tank.

9.2.8.8 Tests and Inspections (Interface Requirements)

The COL applicant shall prepare and perform a preoperational test program and tests in accordance with the requirements of Chapter 14.

9.2.9 Makeup Water Condensate System

9.2.9.1 Design Bases

(1) The Makeup Water-Condensate (MUWC) System shall provide condensate quality water for both normal and emergency operations when required.

(2) The MUWC System shall provide a required water quality as follows:

Conductivity (μS/cm)$\leq$ 0.5 at 25°C

Chlorides, as Cl (ppm)$\leq$ 0.02

pH 5.9 to 8.3 at 25°C

Conductivity and pH limits shall be applied after correction for dissolved CO_2. (The above limits shall be met at least 90% of the time.)

(3) The MUWC System shall supply water for the uses shown in Table 9.2-1.

(4) The MUWC System is not safety-related except as noted in items (7) and (8) below.

(5) The condensate storage tank shall have a capacity of 2110 m^3. This capacity was determined by the capacity required as shown in Table 9.2-3.

In accordance with guidelines of Regulatory Guide 1.155, “Station Blackout”, Position C3.2 through C3.5 as applicable, and 10CFR50.63, the condensate storage tank (CST) is designed to provide approximately (570,000 L) of water for use during station blackout. This volume of water is located in the lower portion of the CST and is sufficient for operation of the RCIC System to remove decay heat during the first eight hours of station blackout.

(6) All tanks, piping and other equipment shall be made of corrosion-resistant materials.

(7) The HPCF and RCIC instrumentation, which initiates the automatic switchover of HPCF and RCIC suction from the CST header to the suppression pool, shall be designed to safety-grade requirements (including installation with necessary seismic support).

(8) The instrumentation is mounted in a safety-grade standpipe located in the Reactor Building secondary containment. With no condensate flowing, the water level is the same in both the CST and the standpipe. A suitable correction will be made for the effect of flow upon water level in the standpipe.

(9) High water level shall be alarmed both in the Radwaste Building control room and in the main control room (Subsection 11.2.1.2.1).

9.2.9.2 System Description

The MUWC P&ID is shown in Figure 9.2-4. This system includes the following:

(1) A condensate storage tank (CST) is provided. The volume is shown in Table 9.2-3.

(2) The following pumps take suction from the CST:

(a) RCIC pumps

(b) CRD pumps

(c) HPCF pumps

(d) SPCU pumps

(e) MUWC transfer pumps (three 149 m^3/h at 0.971 MPa head)

(3) Water can be sent to the CST from the following sources:

(a) MWP pumps

(b) CRD system

(c) Radwaste disposal system

(d) Condensate demineralizer system effluent (main condenser high level relief)

(4) Associated receiving and distribution piping valves, instruments, and controls shall be provided.

(5) Overflow and drain from the CST shall be sent to the radwaste system for treatment.

(6) Any outdoor piping shall be protected from freezing.

(7) All surfaces coming in contact with the condensate shall be made of corrosion-resistant materials.

(8) All of the pumps mentioned in (2) above shall be located at an elevation such that adequate suction head is present at all water levels in the CST.

(9) Instrumentation shall be provided to indicate CST water level in the main control room, Radwaste Building control room and Remote Shutdown System. High water level shall be alarmed both in the Radwaste Building control room and in the main control room (Subsection 11.2.1.2). Low water level shall be alarmed in the main control room.

(10) Potential flooding is discussed in Subsection 3.4. Potential flooding from lines within the Reactor Building and the Control Building are evaluated in Subsection 3.4.1.1.1.

9.2.9.3 Safety Evaluation

Operation of the MUWC System is not required to assure any of the following conditions:

(1) Integrity of the reactor coolant pressure boundary.

(2) Capability to shut down the reactor and maintain it in a safe shutdown condition.

(3) Ability to prevent or mitigate the consequences of events that could result in potential offsite exposures.

The MUWC System is not safety-related. However, the system incorporates features that assure reliable operation over the full range of normal plant operations.

9.2.9.4 Tests and Inspections

The MUWC System is proved operable by its use during normal plant operation. Portions of the system normally closed to flow can be tested to ensure operability and the integrity of the system.

9.2.10 Makeup Water Purified System

9.2.10.1 Design Bases

(1) The Makeup Water Purified (MUWP) System shall provide makeup water purified for makeup to the reactor coolant system and plant auxiliary systems.

(2) The MUWP System shall provide purified water to the uses shown in Table 9.2-2.

(3) The MUWP System shall provide water of the quality shown in Table 9.2-2a. If these water quality requirements are not met, the water shall not be used in any safety-related system. The out-of-spec water shall be reprocessed or discharged.

(4) The MUWP System is not safety-related.

(5) All piping and other equipment shall be made of corrosion-resistant materials.

(6) The system shall be designed to prevent any radioactive contamination of the purified water.

(7) The interfaces between the MUWP System and all safety-related systems are located either in the Control Building or Reactor Building, which are Seismic Category I, tornado-missile resistant and flood protected structures. The interfaces with safety-related systems are safety-related valves which are part of the safety-related systems. The portions of the MUWP System, which upon their failure during a seismic event can adversely impact structures, systems, or components important to safety, shall be designed to assure their integrity under seismic loading resulting from a safe shutdown earthquake.

(8) Safety-related equipment located by portions of the MUWP System are in Seismic Category I structures and protected from all system impact.

9.2.10.2 System Description

The MUWP System P&ID is shown in Figure 9.2-5. This system includes the following:

(1) Distribution piping, valves, instruments and controls shall be provided.

(2) Any outdoor piping shall be protected from freezing.

(3) All surfaces coming in contact with the purified water shall be made of corrosion-resistant materials.

(4) Continuous analyzers are located at the MUWP System. These are supplemented as needed by grab samples. Allowance is made in the water quality specifications for some pickup of carbon dioxide and air in any demineralized water storage tank. The pickup of corrosion products should be minimal because the MUWP piping is stainless steel.

(5) Intrusion of radioactivity into the MUWP System from other potentially radioactive systems are prevented by one or more of the following:

(a) Check valves in the MUWP lines.

(b) Air (or siphon) breaks in the MUWP lines.

(c) The MUWP System lines are pressurized while the receiving system is at essentially atmospheric pressure.

(d) Piping to the user is dead ended.

(6) There are no automatic valves in the MUWP System. During a LOCA, the safety-related systems are isolated from the MUWP System by automatic valves in the safety-related system.

(7) The outboard primary containment isolation valve is locked closed during standby, hot standby and power operation.

9.2.10.3 Safety Evaluation

Operation of the MUWP System is not required to assure any of the following conditions:

(1) Integrity of the reactor coolant pressure boundary.

(2) Capability to shut down the reactor and maintain it in a safe shutdown condition.

(3) Ability to prevent or mitigate the consequences of events which could result in potential offsite exposures.

The MUWP System is not safety-related. However, the systems incorporate features that assure reliable operation over the full range of normal plant operations.

9.2.10.4 Tests and Inspections

The MUWP System is proved operable by its use during normal plant operation. Portions of the system normally closed to flow can be tested to ensure operability and integrity of the system.

Flow to the various systems is balanced by means of manual valves at the individual takeoff points.

9.2.11 Reactor Building Cooling Water System

9.2.11.1 Design Bases

9.2.11.1.1 Safety Design Bases

(1) The Reactor Building Cooling Water (RCW) System shall be designed to remove heat from plant auxiliaries which are required for a safe reactor shutdown, as well as those auxiliaries whose operation is desired following a LOCA, but not essential to safe shutdown.

The heat removal capacity is based on the heat removal requirement during a LOCA with the maximum RSW water temperature at the inlet to the RCW/RSW heat exchangers of 35°C. As shown in Table 9.2-4a, the heat removal requirement is higher during other plant operation modes, such as shutdown at 4 hours. However, the RCW System is designed to remove this larger amount of heat to meet the requirements in Subsection 5.4.7.1.1.7.

(2) The RCW System shall be designed to perform its required cooling functions following a LOCA, assuming a single active or passive failure.

(3) The safety-related portions and valves isolating the non-safety-related portions of the RCW System shall be designed to Seismic Category I and the ASME Code, Section III, Class 3, Quality Assurance B, Quality Group C, IEEE-279 and IEEE-308 requirements.

(4) The RCW System shall be designed to limit leakage to the environment of radioactive contamination that may enter the RCW System from the RHR System.

(5) Safety-related portions of the RCW System shall be protected from flooding, spraying, steam impingement, pipe whip, jet forces, missiles, fire, and the effect of failure of any non-Seismic Category I equipment, as required.

(6) The safety-related portion of the RCW System shall be designed to meet the foregoing design bases during a loss of preferred power (LOPP).

(7) The safety-related electric modules and safety-related cables for the RCW System are in the Control Building and Reactor Building, which are Seismic Category I, tornado-missile resistant and flood protected structures.

(8) Protection from being impacted adversely by missiles generated by any non-safety-related component shall be provided as discussed in Subsection 3.5.1.

(9) Protection against high-energy and moderate-energy line failures will be provided in accordance with Section 3.6.

(10) Piping within the Control Building shall be fabricated and installed as all welded piping. Major components may have flange bolted or welded connections to the piping system. No expansion joints or bellows assemblies shall be used within the Control Building.

9.2.11.1.2 Power Generation Design Bases

The RCW System shall be designed to cool various plant auxiliaries as required during: (a) normal operation; (b) emergency shutdown; (c) normal shutdown; (d) testing; and (e) loss of preferred power (LOPP).

9.2.11.2 System Description

The RCW System distributes cooling water during various operating modes, during shutdown, and during post-LOCA operation. The system removes heat from plant auxiliaries and transfers it to the Reactor Service Water System (Subsection 9.2.15). Figures 9.2-1, sheets 1 through 9, show the piping and instrumentation diagram. Design characteristics for RCW System components are given in Table 9.2-4d.

The Control and Service Building general arrangement drawings, Figures 1.2-14 through 1.2-17 (and companion Fire Protection drawings, Figure 9A.4-11 through 9A.4-13, and Radiation Protection drawings Figures 12.3-42, 43, 48 and 64) show the location of the RCW pumps and heat exchangers. (Note: the heat exchangers are depicted as shell-and-tube type; however, the alternate plate-type can be accomodated in the same area of the Control Building in a horizontal arrangement at elevation -8200mm, the same elevation as the pumps).

The RCW system serves the auxiliary equipment listed in Tables 9.2-4a, 9.2-4b, and 9.2-4c.

Some of the cooling loads are serviced by only one or two RCW divisions. These components may be reassigned to other RCW divisions if redundancy and divisional alignment of supported and supporting systems is maintained and the design basis cooling capacity of the RCW divisions is assured.

The reactor decay heat at four hours after shutdown is approximately 133.1 GJ/h. Each division of the RCW System has the design heat removal capability of 107.6 GJ/h from the RHR System in addition to other cooling loads. If three divisions of RHR/RCW/RSW are used for heat removal, each division must remove one third of the decay heat, or 44.4 GJ/h. This means that each division will remove 107.6 minus 44.4, or 63.2 GJ/h of sensible heat, primarily by cooling the reactor water. If only two divisions of RHR/RCW/RSW are used for heat removal, each division must remove one half of the decay heat, or 66.6 GJ/h. This means the sensible heat removal will be 107.6 minus 66.6 or 41.0 GJ/h of sensible heat primarily from the reactor water. Of course the decay heat will decrease with time.

The above analysis shows that there is sufficient heat removal capability to remove not only the decay heat but also sensible heat primarily from the reactor water. If a division of RHR/RCW/RSW is not available or if heat removal capability has been lost in any of the heat exchangers, only the rate of heat removal will decrease, but heat will still be removed.

Shutdown cooling times are discussed in Subsection 5.4.7.1.1.7.

The RCW System is designed to perform its required safe reactor shutdown cooling function following a postulated LOCA, assuming a single active failure in any mechanical or electrical system. In order to meet this requirement, the RCW System provides three complete trains, which are mechanically and electrically separated. In case of a failure which disables any of the three divisions, the other two division meet plant safe shutdown requirements, including a LOCA or a loss of offsite power, or both. Each RCW division is supplied electrical power from a different division of the ESF power system.

During normal operation, RCW cooling water flows through all the equipment shown in Tables 9.2-4a, 9.2-4b, and 9.2-4c.

During all plant operating modes, a RCW water pump and two heat exchangers are normally operating in each division. Therefore, if a LOCA occurs, the RCW System required to shut down the plant safely are already in operation. The second pump and the third heat exchanger in each division are put in service if a LOCA occurs.

The non-safety-related parts of the RCW System are not required for safe shutdown and, hence, are not safety systems. Isolation valves separate the essential subsystems from the non-safety-related subsystems during a LOCA, in order to assure the integrity and safety functions of the safety-related parts of the system. Some non-safety-related parts of the system are operated during all other modes, including the emergency shutdown following an LOPP or LOCA, as shown in Tables 9.2-4a, 9.2-4b, and 9.2-4c.

Surge tank water level instrument is provided. Low water level signal in the surge tank opens the MUWP makeup water valve and low-low water level signal isolates the non-essential subsystems, thus assuring continued operability of the safety-related services.

Instruments, controls, and isolation valves are located in the safety-related part of the RCW System and designed to safety-grade requirements, as stated in design basis (3) of Subsection 9.2.11.1.1.

Makeup water is automatically added to the surge tanks from the MUWP System. If needed, the operator shall manually add makeup water from the suppression pool (Figure 7.3-7). The surge tanks have an upper part connected to both RCW and HECW Systems and containing 7,000 liters of waters (Figure 9.2-1). Periodically, the average steady-state (no RCW or HECW temperature changes or draining and filling of components) daily surge tank makeup rate shall be determined. When the average daily steady-state makeup exceed 70 liters per day continuously, the operators shall inspect the RCW and HECW Systems in that division and repair leaks until the average daily steady-state makeup rate is below 70 liters per day in that division.

A dedicated sump and sump pump are provided for each RCW division. Any system leakage or drainage may be collected, sampled and analyzed, and either returned to the RCW System or sent to the Liquid Radwaste System for treatment or to the HSD sample tank for discharge depending upon the radioactivity and impurities in the water.

There are cross connections between the divisions, shown in Figure 9.2-1, sheets 2, 5 and 8, which will be used to isolate portions of the RCW System during maintenance shutdowns.

Piping within the control building shall be fabricated and installed as all welded piping. Major components may have flange bolted or welded connections to the piping system. No expansion joints or bellows assemblies shall be used within the Control Building.

9.2.11.3 Safety Evaluation

9.2.11.3.1 Failure Analysis

A system failure analysis of active and passive components of the RCW System is presented in Tables 9.2-5a and 9.2-5b. Any of the assumed failures of the RCW System are detected in the control room by variations of process variables and/or alarms from the various system instruments and also from the leak detection system sensing leakage in the ECCS pump and heat exchanger areas.

9.2.11.3.2 Safety Evaluation of Equipment

Equipment served by the RCW System is listed in Tables 9.2-4a, 9.2-4b, and 9.2-4c. The tables contain five operating modes:

(1) Normal operation

(2) Shutdown at 4 h

(3) Shutdown at 20 h

(4) Hot standby (No LOPP)

(5) Hot standby (LOPP)

(6) Post-LOCA

The flow rates and heat loads are given for each equipment in each operating mode.

In the event of a LOCA, most of the nonessential cooling water uses are isolated by proper isolation valves. The fuel pool coolers, instrument air system, service air system, control rod drive pump oil cooler and the Reactor Water Cleanup (CUW) System pump coolers remain in service until the operator removes them from service. The non-safety-related portion of the system is automatically isolated in the event of a rupture in the non-safety-related subsystem. The surge tank water level is monitored. A level switch is activated by a significant leak, sending an isolation signal to close two valves. One valve on the supply line and one valve on the discharge line are used, with suitable power and controls from divisional sources to assure isolation in the event of any single active failure. Single isolation valves are used on the basis that an active failure of one isolation valve disables only that system of which it was a part.

Water level sensors are located in the RCW surge tank standpipes. Low water level signals from both the surge tank and the standpipe stop any operating pumps in that division. A signal from LOCA, high suppression pool temperature or high RCW water temperature overrides the low water levels signals and puts all pumps in that division in operation.

The RCW System is designed to withstand a single active failure without losing its capability to participate in the safe shutdown of the reactor following a LOCA or DBA. Tables 9.2-5a and 9.2-5b gives the result of a system failure analysis of active and passive components.

Redundant trains of the RCW System are separated and protected to the extent necessary to assure that sufficient equipment remains operating to permit shutdown of the unit in the event of any of the following (separation is applied to electrical equipment and instrumentation and controls as well as to mechanical equipment and piping):

(1) Flooding, spraying, or steam release due to pipe rupture or equipment failure

(2) Pipe whip and jet forces resulting from postulated pipe rupture of nearby high energy pipes

(3) Missiles which may result from equipment failure

(4) Fire

(5) Failures of any non-seismic Category I equipment (pertains to Seismic Category I equipment)

Radiation monitors are provided to sample the RCW cooling water. Upon detection of radiation leakage in one of the systems, that system is isolated by operator action from the control room, and the total cooling load can be met by the other two systems. Consequently, radioactive contamination released by the RCW System to the environment does not exceed allowable limits defined by 10CFR100.

The safety-related parts of the RCW System are designed to Seismic Category I and ASME Code, Section III, Class 3, Quality Assurance B and Quality Group C requirements. The design also meets IEEE-279 and IEEE-308 requirements.

The non-essential portion of the RCW System is designed to the ANSI B31.1 Power Piping Code and the requirements of Quality Group D. The piping between the fuel pool coolers and the separation valves is Seismic Category I and non-safety-grade.

The design pressure and temperature of the RCW System and piping are 1.37 MPaG and 70°C maximum.

System low point drains and high point vents are provided as required.

All divisions are maintained full of water when not in service except when undergoing maintenance.

System components and piping materials are selected where required to be compatible with the available site cooling water in order to minimize corrosion. Cathodic protection of the heat exchanger shall be provided. Adequate corrosion safety factors are used to assure the integrity of the system during the life of the plant.

During all plant operating modes, all divisions have at least one RCW cooling water pump operating. Therefore, if a LOCA occurs, the RCW cooling water system required to shut down the plant safely is already in operation. If a loss of offsite power occurs during a LOCA, the pumps momentarily stop until transfer to standby diesel generator power is completed. The pumps are restarted automatically according to the diesel loading sequence. If a LOCA occurs, most non-safety-related components are automatically isolated from the RCW System. Consequently, no operator action is required, following a LOCA, to start the RCW System in its LOCA operating mode.

All heat exchangers and pumps will be required during the following plant operating conditions, in addition to LOCA: shutdown at 4 hours, shutdown at 20 hours and hot standby with loss of AC power.

Loss of either RCW Division A or B will result in loss of RCW cooling to every other RIP (five total) as shown on RRS P&ID (Figure 5.4-4) and will cause those five RIPs to runback to minimum speed and trip. The RIP M-G set in the same electrical division, which is cooled by the same RCW division which failed and powers three of the same five RIPS, would stop by M-G set cooling water protection. Assuming that the event began at full power on the 100% Control Rod Line, the resulting temporary reactor power would be approximately 60% power. Assuming the RCW division loss did not cause a reactor scram or shutdown for other reasons, the five RIP runback and trip at full power would initiate runback of the other five RIPs to minimum speed and a SCRRI that further reduces reactor power from the 100% power rod line to the 80% power rod line. The operator would then correct the RCW problem or initiate a normal plant shutdown.

Complete failure of any RCW division will reduce drywell cooling, but not enough to require plant shutdown or power level reduction. Failure of RCW Division A would have only one drywell cooler using RCW cooling and the normal HVAC Normal Cooling Water (HNCW) System cooling. Drywell temperatures would not increase enough to adversely affect any drywell components.

The drywell cooling system can perform its function after the loss of any RCW division. With only one RCW division and one drywell cooler operating, the drywell temperature will increase but not to a temperature that would damage equipment or require an immediate shutdown.

9.2.11.4 Testing and Inspection Requirements

The RCW System is designed to permit periodic inservice inspection of all system components to assure the integrity and capability of the system.

The RCW System is designed for periodic pressure and functional testing to assure:

(1) the structural and leaktight integrity by visible inspection of the components;

(2) the operability and the performance of the active components of the system; and

(3) the operability of the system as a whole.

The tests shall assure, under conditions as close to design as practical, the performance of the full operational sequence that brings the system into operation for reactor shutdown and for LOCA, including operating of applicable portions of the Reactor Protection System and the transfer between normal and standby power sources. These tests shall include periodic testing of the heat removal capability of each RCW heat exchanger. Each of these heat exchangers has been designed to provide 20% margin above the heat removal capability required for LOCA in Tables 9.2-4a, 9.2-4b and 9.2-4c.

The revised heat removal capacity of the heat exchangers is shown in Table 9.2-4d. This 20% margin is provided to compensate for the combined effects of fouling and leakage. When this margin is no longer present (i.e., zero margin), the heat exchanger heat removal capacity will be increased by either cleaning or refurbishing.

The RCW System is supplied with a chemical addition tank to add chemicals to each division. The RCW System is initially filled with demineralized water. A corrosion inhibitor can be added if desired. These measures are adequate to protect the RCW System from the ill effects of corrosion or organic fouling.

The RCW System is designed to conform with the foregoing requirements. Initial tests shall be made as described in Subsection 14.2.12.

The heat removal capacities of the as-built RCW heat exchangers shall be estimated before sufficient heat is available for normal heat transfer tests using both test and analysis. The flow rates of RCW and RSW water through the RCW heat exchangers shall be measured using installed or test instruments. By analysis using heat transfer data, from tests performed under similar conditions, the heat removal capacities shall be estimated for the as-built RCW heat exchangers.

9.2.11.5 Instrumentation and Control Requirements

All equipment is provided with either globe or butterfly valves to give the capability for manual control. These valves are accessible downstream of the equipment for regulation of flow through the equipment or for balancing the circuits. The isolation valves to the non-essential RCW System are automatically and remote-manually operated.

Pressure taps or indicators at equipment are provided to enable the operator to adjust the differential pressure across each heat exchanger or cooler and also to allow leak checking.

Locally mounted temperature indicators or test wells are furnished on the equipment cooling water discharge lines to enable verification of specified heat removal during plant operation. The required heat removal and flow rates are shown in Tables 9.2-4a, 9.2-4b, and 9.2-4c.

The combination of pressure taps (or indicators) and temperature indicators allow correct system balancing with or without a system heat load. For purposes of system balancing, provisions for flow measurement are provided as required.

Connections to a radiation monitor are provided in each division to detect radioactive contamination resulting from leakage in one of the RHR exchangers, fuel pool exchangers, or other exchangers.

Isolation valves for RHR heat exchangers and non-essential cooling water subsystems are provided with remote manual switches and indication on the remote shutdown panel.

9.2.12 HVAC Normal Cooling Water System

9.2.12.1 Design Bases

9.2.12.1.1 Power Generation Design Bases

The non-safety-related HVAC Normal Cooling Water (HNCW) System shall provide chilled water to the cooling coils of the drywell coolers, of each building supply unit and of local air conditioners to maintain design thermal environments during normal and upset conditions. The supply temperature is 7°C. The return temperature is 12°C.

9.2.12.1.2 Safety Design Bases

The HNCW System does not perform any safety functions, except for the containment penetration and isolation valves.

9.2.12.2 System Description

The HNCW System components are listed in Table 9.2-6 and shown in Figure 9.2-2.

System components consist of five 25% chillers, each with pumps, serving a common chilled water distribution system connected to the chilled water cooling coils in the drywell coolers, the cooling coils of each building supply unit and cooling coils of local air conditioners. Condenser cooling is from the Turbine Building Cooling Water (TCW) System. Each chiller evaporator is designed, fabricated and certified in accordance with the ASME Code Section VIII, Division 1. A chemical feed tank is provided. Makeup water is from the surge tank, which is shared between the HNCW and TCW Systems, which receives water from the MUWP System. Isolation valves and piping for primary containment penetrations are designed to Seismic Category I, ASME Code, Section III, Class 2, Quality Group B, Quality Assurance B requirements. The supply line penetration has a Division 1 isolation valve outside containment and Class 2 piping into the drywell. The return line penetration has divisional isolation valves inside and outside containment. These valves are motor-operated.

No diesel-generator power is available to this system during a LOPP or a LOCA.

9.2.12.3 Safety Evaluation

Operation of the HNCW System is not required to assure the following conditions:

(1) Integrity of the reactor coolant pressure boundary

(2) Capability to shut down the reactor and maintain it in a safe shutdown condition

(3) Ability to prevent or mitigate the consequences of events which could result in potential offsite radiological exposures

The HNCW System is not safety-related. However, it does incorporate features that assume reliable operation over the full range of normal plant operations.

Portions of the chilled water system which penetrate the primary containment are provided with isolation valves and penetrations which are Seismic Category I, Safety Class 2. The valves may be manually-operated from the control room, except when a LOCA signal assumes control.

9.2.12.4 Tests and Inspections

Initial testing of the system includes performance testing of the chillers, pumps and coils for conformance with design heat loads, water flows, and heat transfer capabilities. An integrity test is performed on the system upon completion.

Provision is made for periodic inspection of major components to ensure the capability and integrity of the system. Local display devices are provided to indicate all vital parameters required in testing and inspections.

The chillers are tested in accordance with ASHRAE Standard 30 (Methods of Testing for Rating Liquid Chilling Packages). The pumps are tested in accordance with standards of the Hydraulic Institute. ASME Section VIII and TEMA C standards apply to the ASHRAE Standard 33 (Methods of Testing for Rating Forced Circulation Air-Cooling and Heating Coils).

Samples of chilled water may be obtained for chemical analyses. Radioactivity is not expected to be in the chilled water.

9.2.12.5 Instrumentation Application

A regulated supply of demineralized makeup water adds water to the TCW expansion tank by water level controls, and the chiller units are controlled individually by remote manual switches.

A temperature controller and flow switch continuously monitor the discharge of the evaporator. If the temperature of the chilled water drops below a specified level, the control automatically adjusts the temperature control inlet guide vanes of the chiller compressor. Flow switches prohibit the chiller from operating unless there is water flow through both evaporator and condenser. (See Section 3.11 for temperature

requirements.) In case of a chiller or pump trip, the standby units are automatically started.

Chilled water flow into and out of the containment is controlled by isolation valves which shall be automatically closed after a LOCA signal. Condenser water is provided from the TCW System. The thermocouples are located in each area being cooled. The control room operator can adjust the three-way valve position during startup and whenever high chilled water return temperatures are indicated and alarmed. Alternately, instead of the three-way valves, a flow control valve may be used.

Remote controlled valves permit isolation of any drywell cooling coil in the event of the coil developing a detectable leak.

9.2.13 HVAC Emergency Cooling Water System

9.2.13.1 Design Basis

9.2.13.1.1 Power Generation Design Bases

The safety-related HVAC Emergency Cooling Water (HECW) System shall provide chilled water under normal plant operating conditions to the Reactor Building safety-related electrical equipment HVAC system, Control Building safety-related equipment area HVAC System and the control room habitability area HVAC System (Table 9.2-9). The supply temperature is 7°C, the return temperature is 17°C.

9.2.13.1.2 Safety Design Bases

The HECW System performs a safety design function.

(1) The HECW System shall deliver chilled water to the Reactor Building safety-related electrical equipment HVAC System and Control Building safety-related equipment area HVAC System and the control room habitability area HVAC System during shutdown of the reactor, operating modes and abnormal reactor conditions including LOCA.

(2) Sufficient redundancy and electrical and mechanical separation shall be provided to ensure proper operations under all conditions.

(3) The system shall be designed and constructed in accordance with Seismic Category I, ASME Code, Section III, Class 3 requirements.

(4) The system shall be powered from Class 1E buses. Power shall be available from the Alternate AC (AAC) power source when required.

(5) The HECW System shall be protected from missiles in accordance with Subsection 3.5.1.

(6) Design features to preclude the adverse effects of water hammer are in accordance with the SRP section addressing the resolution of USI A-1 discussed in NUREG-0927.

These features shall include:

(a) An elevated surge tank to keep the system filled.

(b) Vents provided at all high points in the system.

(c) After any system drainage, venting is assured by personnel training and procedures.

(d) System valves are slow acting.

(7) The HECW System shall be protected from failures of high and medium energy lines as discussed in Section 3.6.

(8) The design operation of the HECW compressors will take into account power or operational perturbations which could result in a) frequent immediate or elongated restarts, b) in unacceptable compressor coolant and lubrication oil interactions, and c) compressor coolant leaks or releases.

(9) The system piping design will take into account unacceptable nil-ductility-temperature conditions associated with normal and transient operation.

9.2.13.2 System Description

The HECW System consists of subsystems in three divisions. Divisions A, B and C have two refrigerator units, two pumps, instrumentation and distribution piping and valves to corresponding cooling coils. A chemical addition tank is shared by all HECW divisions. Each HECW division shares a surge tank with the corresponding division of the RCW System. The refrigerator capacity is designed to cool the Reactor Building safety-related electrical equipment HVAC Systems and Control Building safety-related equipment area HVAC Systems.

The system is shown in Figure 9.2-3. The refrigerators are located in the Control Building as shown in Figures 1.2-20 and 1.2-21. Each refrigerator unit consists of a evaporator, a compressor, refrigerant, piping, and package chiller controls. This system shares the RCW surge tanks which are in the Reactor Building (Figure 1.2-12). Equipment is listed in Table 9.2-8. Each cooling coil is controlled by a room thermostat. Alternately, flow may be controlled by a temperature control valve. Condenser cooling is from the corresponding division of the RCW System.

Piping and valves for the HECW System, as well as the cooling water lines from the RCW System, designed entirely to ASME Code, Section III, Class 3, Quality Group C, Quality

Assurance B requirements. The extent of this classification is up to and including drainage block valves. There are no primary or secondary containment penetrations within the system. The HECW System is not expected to contain radioactivity.

High temperature of the returned cooling water causes the standby refrigerator unit to start automatically. Makeup water is supplied from the MUWP System, at the surge tank. Each surge tank has the capacity to replace system water losses for more than 100 days during an emergency. The only non-safety-related portions of the HECW divisions are the chemical addition tank and the piping from the tank to the safety-related valves which isolate the safety-related portions of the system.

Also, see Subsection 9.2.17.1 for COL license information requirements.

9.2.13.3 Safety Evaluation

The HECW System is a Seismic Category I system, protected from flooding and tornado missiles. All components of the system are designed to be operable during a loss of normal power by connection to the ESF buses (Tables 8.3-1 and 8.3-2). Redundant components are provided to ensure that any single component failure does not preclude system operation. The system is designed to meet the requirements of Criterion 19 of 10CFR50. The refrigerators of each division are in separate rooms.

During a Station Blackout (SBO), the HECW refrigerators, pumps and instrumentation will be powered by the AAC System which will become available in ten minutes. Provisions will be made to ensure prompt and reliable restart of the chiller units. COL license information requirements are provided in Subsection 9.2.17.1.

The response to SBO is discussed in Chapter 1, Appendix 1C. During the SBO, little heat will be generated in the areas cooled by HECW because only battery powered equipment will be operating. These areas are the main control room, the Control Building essential electrical equipment rooms and the Reactor Building essential electrical equipment rooms. The HVAC fans in these areas are powered by Class 1E buses. When AAC power becomes available, these fans will be powered and will start supplying outside air and exhausting any hot air from these areas. When chilled water becomes available, cooled air will be circulated in these areas to restore normal temperature.

If a LOPP event occurs, there are provisions for a stop signal to the HECW pumps to trip the breakers or for sequencing the HECW pumps back onto the emergency bus during the allotted time frame (load block 3), which is 15 seconds after the emergency buses are picked up by the diesel generators. Once the pumps are reconnected to the emergency bus, they are prevented from cycling on and off until the remaining LOPP sequence loads are connected to the emergency bus. If a LOCA follows a LOPP, there

are provisions for resetting the start timers and connecting the HECW pumps to the emergency busses at the proper time if they are not already connected when the LOCA appears.

Power is provided to the HECW refrigerators thirty seconds after it is provided to the HECW pumps. The HECW refrigerators will then begin a programmed startup process.

The HECW system air operated valves will upon loss of instrument air or power assume configurations or positions that assure continued system cooling service.

9.2.13.4 Tests and Inspection

Initial testing of the system includes performance testing of the refrigerators, pumps and coils for conformance with design capacity water flows and heat transfer capabilities. An integrity test is performed on the system upon completion.

The HECW System is designed for periodic pressure and functional testing to assure:

(1) the structural and leaktight integrity by visual inspection of the components;

(2) the operability and the performance of the active components of the system; and

(3) the operability of the system as a whole.

Local display devices are provided to indicate all vital parameters required in testing and inspections. Standby features are periodically tested by initiating the transfer sequence during normal operation.

The refrigerators are tested in accordance with ASHRAE Standard 30. The pumps are tested in accordance with standards of the Hydraulic Institute. ASME Section VIII and TEMA C standards apply to the heat exchangers. The cooling coils are tested in accordance with ASHRAE Standard 33.

9.2.13.5 Instrumentation and Alarms

A regulated supply of makeup water is provided to add purified water to the surge tanks by water level controls.

The chilled water pumps are controlled from the main control panel. The standby refrigerator has an interlock which automatically starts the standby refrigerator and pump upon failure of the operating unit.

The refrigerator units can be controlled individually from the main control room by a remote manual switch. Chilled water temperature is controlled by inlet guide vanes on

each chiller refrigerant circuit. Condenser water flow is controlled by a two-way valve based on refrigerant compressor discharge pressure.

A temperature controller and flow switch continuously monitor the discharge of each evaporator. If the temperature of the chilled water drops below a specified level, the controller automatically adjusts the position of the compressor inlet guide vanes. Flow switches prohibit the chiller from operating unless there is water flow through both evaporator and condenser.

9.2.14 Turbine Building Cooling Water System

9.2.14.1 Design Bases

9.2.14.1.1 Safety Design Bases

The Turbine Building Cooling Water (TCW) System (Figure 9.2-6) serves no safety function and has no safety design basis.

There are no connections between the TCW System and any other safety-related systems.

9.2.14.1.2 Power Generation Design Bases

(1) The TCW System provides corrosion-inhibited, demineralized cooling water to all Turbine Island auxiliary equipment listed in Table 9.2-11.

(2) During power operation, the TCW System operates to provide a continuous supply of cooling water, at a maximum temperature of 41°C, to the Turbine Island auxiliary equipment, with a service water inlet temperature not exceeding 37.8°C.

(3) The TCW System is designed to permit the maintenance of any single active component without interruption of the cooling function.

(4) Makeup to the TCW System is designed to permit continuous system operation with design failure leakage and to permit expeditious post-maintenance system refill.

(5) The TCW System is designed to have an atmospheric surge tank located at the highest point in the system.

(6) The TCW System is designed to have a higher pressure than the power cycle heat sink water to ensure leakage is from the TCW System to the power cycle heat sink in the event a tube leak occurs in the TCW System heat exchanger.

9.2.14.2 System Description

9.2.14.2.1 General Description

The TCW System is a single-loop system and consists of one surge tank, one chemical addition tank, three pumps with a capacity of 3405 m^3/h each, three heat exchangers with heat removal capacity of 68.7 GJ/h each (connected in parallel), and associated coolers, piping, valves, controls, and instrumentation. Heat is removed from the TCW System and transferred to the non-safety-related Turbine Service Water (TSW) System (Subsection 9.2.16).

A TCW System sample is periodically taken for analysis to assure that the water quality meets the chemical specifications.

9.2.14.2.2 Component Description

Codes and standards applicable to the TCW System are listed in Table 3.2-1. The system is designed in accordance with quality Group D specifications.

The chemical addition tank is located in the Turbine Building in close proximity to the TCW System surge tank.

The TCW pumps are 50% capacity each and are constant speed electric motor-driven, horizontal centrifugal pumps. The three pumps are connected in parallel with common suction and discharge lines. One 50% TCW pump is on standby.

The TCW heat exchangers are 50% capacity each and are designed to have the TCW water circulated on the shell side and the power cycle heat sink water circulated on the tube side. The surface area is based on normal heat load.

The surge tank, which is shared between the HNCW and TCW Systems, is an atmospheric carbon steel tank located at the highest point in the TCW System. The surge tank is provided with a level control valve that controls makeup water addition.

The surge tank is located above the TCW pumps and heat exchangers in the Turbine Building in a location away from any safety-related components. Failure of the surge tank will not affect any safety-related system.

Those parts of the TCW System in the Turbine Building are located in areas that do not contain any safety-related systems. Those parts of the TCW System outside the turbine building are located away from any safety-related system.

9.2.14.2.3 System Operation

During normal operation, two of the three 50% capacity TCW System pumps circulate corrosion-inhibited demineralized water through the shell side of two of the three 50%

capacity TCW heat exchangers in service. The heat from the TCW System is rejected to the TSW System, which circulates water on the tube side of the TCW System heat exchangers.

The standby TCW System pump is automatically started on detection of low TCW System pump discharge pressure. The standby TCW System heat exchanger is placed in service manually.

The cooling water flow rate to the electro-hydraulic control (EHC) coolers, the turbine lube oil coolers and aftercoolers, and generator exciter air cooler is regulated by control valves. Control valves in the cooling water outlet from these units are throttled in response to temperature signals from the fluid being cooled.

The flow rate of cooling water to all of the other coolers is manually regulated by individual throttling valves located on the cooling water outlet from each unit.

The minimum system cooling water temperature is maintained by adjusting the TCW System heat exchanger bypass valve.

The surge tank provides a reservoir for small amounts of leakage from the system and for the expansion and contraction of the cooling fluid with changes in the system temperature and is connected to the pump suction.

Demineralized makeup water to the TCW System is controlled automatically by a level control valve which is actuated by sensing surge tank level. A corrosion inhibitor is manually added to the system.

9.2.14.3 Safety Evaluation

The TCW System has no safety design bases and serves no safety function.

9.2.14.4 Tests and Inspections

All major components are tested and inspected as separate components prior to installation, and as an integrated system after installation to ensure design performance. The systems are preoperationally tested in accordance with the requirements of Chapter 14.

The components of the TCW System and associated instrumentation are accessible during plant operation for visual examination. Periodic inspections during normal operation are made to ensure operability and integrity of the system. Inspections include measurements of cooling water flows, temperatures, pressures, water quality, corrosion-erosion rate, control positions, and setpoints to verify the system condition.

9.2.14.5 Instrumentation and Alarms

Pressure and temperature indicators are provided where required for testing and balancing the system. Flow indicator taps are provided at strategic points in the system for initial balancing of the flows and verifying flows during plant operation.

Surge tank high and low level and TCW pump discharge pressure alarms are retransmitted to the main control room from the TCW local control panels.

Makeup flow to the TCW System surge tank is initiated automatically by low surge tank water level and is continued until the normal level is reestablished.

Provisions for taking TCW System water samples are included.

9.2.15 Reactor Service Water System

9.2.15.1 Portions Within Scope of ABWR Standard Plant

Those portions of the Reactor Service Water (RSW) System that are within the Control Building are in the scope of the ABWR Standard Plant and are described in Subsections 9.2.15.1.1 through 9.2.15.1.6.

All portions of the RSW System which are outside the Control Building are not in the scope of the ABWR Standard Plant.

9.2.15.1.1 Safety Design Bases

(1) The RSW System shall be designed in three mechanically and electrically separated divisions to remove heat from the three divisions of the Reactor Cooling Water (RCW) System which is required for safe reactor shutdown, and which also cools those auxiliaries whose operation is desired following a LOCA, but not essential to safe shutdown.

The heat removal requirements from the RCW System and the UHS temperature are in Subsection 9.2.11.1.

(2) The RSW System shall be designed to Seismic Category I and ASME Code, Section III, Class 3, Quality Assurance B, Quality Group C, IEEE-279 and IEEE-308 requirements.

(3) Each RSW System division shall be mechanically and electrically separated from the other divisions. For any structures housing RSW System components, there shall be inter-divisional boundaries (including walls, floors, doors and penetrations) that have a three hour fire rating. In addition, each division

shall be protected from flooding, spraying, steam impingement, pipe whip, jet forces, missiles, fire from the other divisions and the effect of failure of any non-Seismic Category I equipment, as required.

(4) The RSW System shall be designed to meet the foregoing design bases during a loss of preferred power.

(5) System low point drains and high point vents are provided as required. All divisions are maintained full of water (to prevent waterhammer) when not in service except when undergoing maintenance.

(6) Piping within the Control Building shall be fabricated and installed as all welded piping. Major components may have flange bolted or welded connections to the piping system. No expansion joints or bellows assemblies shall be used within the Control Building.

9.2.15.1.2 Power Generation Design Bases

The RSW System (Figure 9.2-7) shall be designed to cool the Reactor Building Cooling Water (RCW) as required during: (a) normal operation; (b) emergency shutdown; (c) normal shutdown; (d) testing; and (e) loss of preferred power.

9.2.15.1.3 System Description

The RSW System (Figure 9.2-7) provides cooling water during various operating modes, during shutdown and post-LOCA operations. The system removes heat from the RCW System and transfers it to the ultimate heat sink. Component descriptions of the RSW System are provided in Table 9.2-13.

The RSW System response to high water level in the RCW/RSW heat exchanger room in the Control Building is discussed in Subsection 3.4.1.1.2.2 and Figure 7.3-7. The isolation valves shall close upon receipt of a high water level signal in the RCW/RSW heat exchanger room in that division.

9.2.15.1.4 Safety Evaluation

The components of the RSW System are separated and protected to the extent necessary to assure that sufficient equipment remains operating to permit shutdown of the unit in the event of any of the following (separation is applied to electrical equipment and instrumentation and controls as well as to mechanical equipment and piping):

(1) Flooding, spraying or steam release due to pipe rupture or equipment failure

(2) Pipe whip and jet forces resulting from postulated pipe rupture of nearby high energy pipes

(3) Missiles which result from equipment failure

(4) Fire

Liquid radiation monitors are provided in the RCW System. Upon detection of radiation leakage in a division of the RCW System, that system is isolated by operator action from the control room, and the cooling load is met by another division of the RCW System. Consequently, radioactive contamination released by the RSW System to the environment does not exceed allowable limits defined by 10CFR100.

System low point drains and high point vents are provided as required.

During all plant operating modes, each division shall have at least one service water pump operating. Therefore, if a LOCA occurs, the system is already in operation and all standby pumps start and all standby valves open. If a loss of offsite power occurs during a LOCA, the pumps momentarily stop until transfer to standby diesel-generator power is completed. The pumps are restarted automatically according to the diesel loading sequence. No operator action is required, following a LOCA, to start the RSW System in its LOCA operating mode.

9.2.15.1.5 Instrumentation and Alarms

Locally mounted temperature indicators or test wells are furnished on the equipment cooling water discharge lines to enable verification of specified heat removal during plant operation.

The Control Building basement has potential flooding from several sources with the RSW being the largest. Safety-related pipe break detection is required to take automatic protective action for breaks within the Control Building RCW individual areas.

Each RCW equipment divisional area will be provided with water level detection instrumentation. The instrumentation will be composed of two sets of water level detection devices. A set of four water detection devices will provide alarms locally and in the MCR. This set will detect initial abnormal water level. The second set of four diverse seafety-related water level devices will provide alarm, valve closure and pump trip actions. For further discussion see Subsection 3.4.1. The devices are shown in Figure 11.2-2a (Sheet 36). The four sensors in each set will be arranged in a 2/4 logic to provide redundant trip actuation signals. The instrumentation will utilize MUX devices and network interconnections.

9.2.15.1.6 Tests and Inspections

The RSW System is designed for periodic pressure and functional testing to assure:

(1) The structural and leaktight integrity by visible inspection of the components

(2) The operability and the performance of active components of the system

(3) The operability of the system as a whole

9.2.15.2 Portions Outside the Scope of ABWR Standard Plant

All portions of the RSW System which are outside the Control Building are not in the scope of the ABWR Standard Plant. Subsections 9.2.15.2.1 through 9.2.15.2.6 provide conceptual design of these portions of the RSW System as required by 10CFR52. The interface requirements for this system are part of the design certification.

The site-dependent portions of the RSW System shall meet all requirements in Subsections 9.2.15.1.1 through 9.2.15.1.6 and all following requirements. This subsection provides a conceptual design and interface requirements for those portions of the RSW System which are site-dependent and are a part of the design certification.

9.2.15.2.1 Safety Design Bases (Interface Requirements)

The COL applicant shall provide the following system design features and additional information which are site dependent:

(1) The temperature increase and pressure drop across the heat exchangers.

(2) The required and available net positive suction head for the RSW pumps at pump suction locations considering anticipated low water levels.

(3) The location of the RSW pump house.

(4) The design features to assure that the requirements in Subsection 9.2.15.1.1(3) are met.

(5) An analysis of an RSW pipeline break and a single active component failure shall show that maximum flooding will not exceed 5.0m in an individual RCW heat exchanger room.

(6) System low point drains and high point vents are provided as required. All divisions are maintained full of water (to prevent waterhammer) when not in service except when undergoing maintenance.

9.2.15.2.2 Power Generation Design Bases (Interface Requirements)

(1) The RSW system shall be able to function during abnormally high or low water levels and steps are taken to prevent organic fouling that may degrade system performance. These steps include trash racks and provisions for biocide treatment (where discharge is allowed). Where discharge of biocide is not allowed, non-biocide treatment shall be provided. Thermal backwashing

capability shall be provided at any site where infestations of macrobial growth can occur.

(2) System components and piping materials shall be provided to be compatible with the site cooling water to minimize corrosion. Adequate corrosion and erosion safety factors shall be used to assure the integrity of the system during the life of the plant.

(3) The heat removal requirements from the RCW system are in Table 9.2-4d.

(4) Potable water shall be provided to flush the service water side of the RSW/RCW heat exchangers whenever they are put into a wet standby condition (Subsection 9.2.4.1.3).

9.2.15.2.3 System Description (Conceptual Design)

The RSW System is shown on Figure 9.2-7. components of the RSW System are provided as shown in Table 9.2-13.

The RSW pump house is located at the ultimate heat sink (UHS) which is described in Subsection 9.2.5.

The RSW pump house shall be located so that the main service water piping between it and the Control Building shall not exceed 2 km in length. The piping is the choice of the COL applicant.

The RSW System is able to function during abnormally high or low water levels, and steps are taken to prevent organic fouling that may degrade system performance. These steps include trash racks and provisions for biocide treatment (where discharge is allowed). Where discharge of biocide is not allowed, non-biocide treatment will be provided. Thermal backwashing capability will be provided at any site where infestations of microbial growth can occur.

9.2.15.2.4 Safety Evaluation (Interface Requirement)

An analysis shall show that the requirements in Subsections 9.2.15.1.1(3) and 9.2.15.2.1(5) are met.

9.2.15.2.5 Instrumentation and Alarms (Interface Requirement)

All pumps shall stop and all automatic isolation valves outside the Control Building shall close upon receipt of a high water level signal in the RCW heat exchanger room in that division.

Normally the operators will periodically clean the strainers to maintain low differential pressure. High pressure difference across the service water strainers shall alarm in the control room.

9.2.15.2.6 Tests and Inspections (Interface Requirements)

The tests shall assure, under conditions as close to design as practical, the performance of the full operational sequence that brings the system into operation for reactor shutdown and for LOCA, including operating of applicable portions of the reactor protection system and the transfer between normal and standby power sources.

9.2.16 Turbine Service Water System

9.2.16.1 Portions Within Scope of ABWR Standard Plant

Those portions of the Turbine Service Water (TSW) System that are within the Turbine Building are in the scope of the ABWR Standard Plant and are described in Subsections 9.2.16.1.1 through 9.2.16.1.6.

All portions of the TSW System that are outside the Turbine Building are not in the scope of the ABWR Standard Plant.

9.2.16.1.1 Safety Design Bases

The TSW System does not serve or support any safety function and has no safety design basis.

9.2.16.1.2 Power Generation Design Bases

(1) The TSW System is designed to remove heat from the TCW System heat exchangers and reject this heat to the power cycle heat sink during normal and shutdown conditions.

(2) During normal power operation, the TSW System supplies cooling water to the TCW System heat exchangers at a temperature not exceeding 37.8°C.

(3) The TSW System is designed to permit the maintenance of any single active component without interruption of the cooling function.

9.2.16.1.3 System Description

9.2.16.1.3.1 General Description

The Turbine Service Water (TSW) System supplies cooling water to the Turbine Cooling Water (TCW) System heat exchangers to transfer heat from the TCW System to the power cycle heat sink.

The TSW system is illustrated on Figure 9.2-8.

9.2.16.1.3.2 Component Description

The TSW heat exchangers are shown on Figure 9.2-6a and are described in Subsection 9.2.14.2.

9.2.16.1.3.3 System Operation

The system is operated from the main control room.

9.2.16.1.4 Safety Evaluation

The TSW System is not interconnected with any safety-related system.

9.2.16.1.5 Instrumentation Application

Pressure and temperature indicators are provided where required for testing the system.

9.2.16.1.6 Tests and Inspections

All major components are tested and inspected as separate components prior to installation, and as an integrated system after installation to ensure design performance. The systems are preoperationally tested in accordance with the requirements of Chapter 14.

The components of the TSW System and associated instrumentation are accessible during plant operation for visual examination. Periodic inspections during normal operation are made to ensure operability and integrity of the system. Inspections include measurement of the TSW System flow, temperatures, pressures, differential pressures and valve positions to verify the system condition.

9.2.16.2 Portions Outside Scope of ABWR Standard Plant

All portions of the TSW System that are outside the Turbine Building are not in the scope of the ABWR Standard Plant. Subsections 9.2.16.2.1 and 9.2.16.2.2 provide a conceptual design of these portions of the TSW System as required by 10CFR52. The interface requirements for this system are part of the design certification.

The site-dependent portions of the TSW System shall meet all requirements in Subsections 9.2.16.1.1 through 9.2.16.1.5 and following requirements. This subsection provides a conceptual design and interface requirements for those portions of the TSW System which are site dependent and are a part of the design certification.

9.2.16.2.1 Safety Design Bases (Interface Requirement)

There are none.

9.2.16.2.2 Power Generation Design Bases (Interface Requirements)

The COL applicant shall provide the following system design features and additional information which are site dependent:

(1) The temperature increase and pressure drop across the heat exchangers.

(2) The required and available net positive suction head for the TSW pumps at pump suction locations considering anticipated low water levels.

(3) The location of the TSW pump house.

(4) The heat removal requirements from the TCW System are in Subsection 9.2.14.2.

(5) System low point drains and high point vents are provided as required. All components are maintained full of water (to prevent waterhammer) when not in service except when undergoing maintenance.

9.2.16.2.3 System Description

9.2.16.2.3.1 General Description (Conceptual Design)

The TSW System consists of three 50% capacity vertical wet pit pumps located at the intake structure. Two pumps are in operation during normal operation with one pump in standby.

The TSW pumps supply cooling water to the three TCW heat exchangers (two are normally in service and one is on standby).

9.2.16.2.3.2 Component Description (Conceptual Design)

Three strainers are provided (one for each TSW pump). Debris collected in the strainer is sluiced to a disposal collection area.

Piping and valves in the TSW System are protected from interior corrosion with suitable corrosion resistant material as required by site specific soil and water conditions.

9.2.16.2.3.3 System Operation (Conceptual Design)

The system is operated from the main control room.

The standby pump is started automatically in the event the normally operating pump trips or the discharge header pressure drops below a preset limit.

9.2.16.2.4 Safety Evaluation (Interface Requirements)

The COL applicant shall demonstrate that all safety-related components, systems and structures are protected from flooding in the event of a pipeline break in the TSW System.

9.2.16.2.5 Instrumentation and Alarms (Interface Requirements)

TSW System pump status shall be indicated in the main control room.

TSW System trip shall be alarmed and the automatic startup of the standby pump shall be annunciated in the main control room.

High differential pressure across the duplex filters shall be alarmed in the main control room.

9.2.16.2.6 Tests and Inspections (Interface Requirements)

All major components are tested and inspected as separate components prior to installation, and as an integrated system after installation to ensure design performance. The systems are preoperationally tested in accordance with the requirements of Chapter 14.

The components of the TSW System and associated instrumentation are accessible during plant operation for visual examination. Periodic inspections during normal operation are made to ensure operability and integrity of the system. Inspections include measurements of cooling water flows, temperatures, pressures, water quality, corrosion-erosion rate, control positions, and setpoints to verify the system condition.

9.2.17 COL License Information

9.2.17.1 HECW System Refrigerator Requirements

The COL applicant shall provide for the following after refrigerators have been procured:

(1) Means shall be provided for adjusting refrigerator capacity to chilled water outlet temperature.

(2) Means shall be provided for starting and stopping the pump and refrigerator on proper sequence.

(3) Means shall be provided for reacting to a loss of electrical power for periods up to two (2) hours and for automatic restarting of pumps and refrigerators, under the expected environmental conditions during station blackout when electrical power is restored.

(4) Means shall be provided to minimize the potential for coolant leakage or release into system or surrounding equipment environs.

(5) An evaluation of transient effects on starting and stopping or prolonged stoppage of the refrigeration/chiller units. Effects like high restart circuit draw downs on safety buses, coolant-oil interactions, degassing needs, coolant gas leakage or release in equipment areas along with flammability threats, synchronized refrigeration swapping.

9.2.17.2 Reactor Service Water System Requirements

The COL applicant shall provide the following which apply on a plant specific basis:

(1) Provisions for periodic analyses of samples of water and substrate and/or periodic visual inspection of intake structure for biofouling and removal of any fouling accumulations detected during such inspections.

(2) Provisions for periodic full flow testing of redundant and infrequently used cooling loops.

(3) Provisions for continuous biocide treatment of the RSW System for sites with a potential for macroscopic biofouling.

(4) Provisions for filling RSW System cooling loops with biocide treated water before layup.

(5) Provisions for biocide treatment before layup for other systems such as some fire protection system which use raw service water as a source for the systems.

(6) Provisions for a EPG that backup the RSW System leak detection instrumentation automatice protective actions by manual operator actions including local and manual valve closure actions.

Table 9.2-1 Users of Makeup Water-Condensate

The MUWC transfer pumps provide condensate to the following systems and uses:

- Main condenser hotwell
- Liquid Radwaste System
- Residual Heat Removal System flushing
- High Pressure Core Flooder System charging and flushing
- Reactor Core Isolation Cooling System charging and flushing
- Fuel pool skimmer surge tanks
- Cleanup system phase separators and cleanup system filter demineralizer
- Condensate filter and demineralizer
- Other miscellaneous uses.

Table 9.2-2 Users of Makeup Water-Purified

The MUWP transfer pumps provide purified water to the following systems and uses:

- Condensate storage tank makeup
- Reactor Building Cooling Water System makeup
- Turbine Building Cooling Water System makeup
- Diesel Generator Cooling Water System makeup
- Liquid radwaste system
- Standby liquid control tank
- Decontamination station
- Plant chilled water systems
- Plant laboratories
- Other miscellaneous uses

Table 9.2-2a Water Quality Characteristics for the Makeup Water Purified System

Water Quality Parameter		Operating Target	System Design	Maximum Value
Chloride (ppb)		10.0	20.0	100.0
Sulfate (ppb)		10.0	20.0	100.0
Conductivity* at 25°C (µS/cm)		0.2	0.3	1.0
Silica (ppb as SiO_2)		10.0	20.0	100.0
pH at 25°C	Min	6.4	6.2	5.6
	Max	7.8	8.0	8.6
Corrosion Product Metals (ppb)				
Fe insoluble				
soluble				
Cu total		10.0	20.0	100.0
all other metals				
	sum	10.0	20.0	100.0
Organic Impurities†				
Equivalent K (µS/cm)		0.2	0.4	2.0

* Does not include an incremental conductivity value of 0.8 uS/cm at 25°C due to carbon dioxide from air in water stored in tanks open to the atmosphere.

† Organic impurity values apply to fresh makeup water stored in any Demineralized Water Storage Tank.

Table 9.2-3 Capacity Requirements for Condensate Storage Tank

Dead space—top of pool	29,901L*
Normal operation variation and receiving volume for plant startup return water	999,240L
Minimum storage volume	247,500L
Dead space—middle of pool	129,901L*
Water source for station blackout	569,567L†
Dead space—bottom of pool	129,901L*
Total	2,108,321L

* These values are based on a bottom area of $130m^3$.

† Water for operation of RCIC is taken from the condensate storage tank and the suppression pool as described in the EPGs of Appendix 18A.

Table 9.2-4a Reactor Building Cooling Water Division A

Operating Mode/Components	Normal Operating Conditions		Shutdown at 4 Hours		Shutdown at 20 Hours		Hot Standby (No Loss of AC)		Hot Standby (Loss of AC)		Emergency (LOCA) (Suppression Pool at 97°C	
	Heat*	Flow*	Heat	Flow	Heat	Flow	Heat	Flow	Heat	Flow	Heat	Flow
Essential												
Emergency Diesel Generator A	—	—	—	—	—	—	—	—	13.40	229	13.40	229
RHR Heat Exchanger A	—	—	108.02	1,199	34.75	1,199	—	—	25.54	1,199	89.18	1,199
Others (essential)†	3.18	205	3.60	205	3.81	205	3.39	205	4.10	205	4.19	205
Non-Essential												
CUW Heat Exchanger‡	20.10	159	—	159	—	159	20.10	159	20.93	159	—	—
FPC Heat Exchanger A*f*	7.12	279	7.12	279	7.12	279	7.12	279	7.12	279	9.63	279
Inside Drywell**	5.86	320	5.86	320	5.86	320	5.86	320	3.39	320	—	—
Others (non-essential)††	2.64	160	2.64	160	2.64	160	2.64	160	0.84	59	0.75	59
Total Load	38.94	1,123	127.24	2,322	54.01	2,322	38.94	1,123	75.36	2,450	117.23	1,971

* Heat in GJ/h; flow in m^3/h, sums may not be equal due to rounding.

† HECW refrigerator, CAMS coolers, room coolers (RHR, RCIC, CAMS), RHR motor and seal coolers.

‡ The heat transferred from the CUW heat exchanger at the start of cooldown is appreciable, but during the critical last part of a cooldown, the heat removed is very little because the temperature difference between the reactor water and the RCW System is small. Sometimes, the operators may remove the CUW heat exchangers from service during cooldown. Thus, the heat removed varies from about that during normal operation at the start of cooldown to very little at the end of cooldown.

f Includes FPC room cooler.

** Drywell (A & C) and RIP coolers.

†† Instruments and service air coolers; CUW pump cooler, CRD pump oil, and RIP MG sets.

Table 9.2-4b Reactor Building Cooling Water Division B

Operating Mode/Components	Normal Operating Conditions		Shutdown at 4 Hours		Shutdown at 20 Hours		Hot Standby (No Loss of AC)		Hot Standby (Loss of AC)		Emergency (LOCA) (Suppression Pool at 97°C	
	Heat*	Flow*	Heat	Flow	Heat	Flow	Heat	Flow	Heat	Flow	Heat	Flow
Essential												
Emergency Diesel Generator B	—	—	—	—	—	—	—	—	13.40	229	13.40	229
RHR Heat Exchanger B	—	—	108.02	1,199	34.75	1,199	—	—	25.54	1,199	89.18	1,199
Others (essential)†	6.28	360	6.70	360	6.70	360	6.28	360	7.12	360	7.95	360
Non-Essential												
CUW Heat Exchanger‡	20.10	159	—	159	—	159	20.10	159	20.93	159	—	—
FPC Heat Exchanger B*f*	7.12	279	7.12	279	7.12	279	7.12	279	7.12	279	9.63	279
Inside Drywell**	5.44	279	6.28	279	5.40	279	5.40	279	2.51	279	—	—
Others (non-essential)††	2.93	159	1.47	159	1.47	159	1.47	159	0.33	9.1	—	9.1
Total Load	41.87	1,236	129.79	2,435	55.27	2,435	40.19	1,236	77.04	2,514	120.16	2,076

* Heat in GJ/h; flow in m^3/h, sums may not be equal due to rounding.

† HECW refrigerator, room coolers (RHR, HPCF, SGTS, FCS, CAMS), CAMS cooler, HPCF and RHR motor and mechanical seal coolers.

‡ The heat transferred from the CUW heat exchanger at the start of cooldown is appreciable, but during the critical last part of a cooldown, the heat removed is very little because the temperature difference between the reactor water and the RCW System is small. Sometimes, the operators may remove the CUW heat exchangers from service during cooldown. Thus, the heat removed varies from about that during normal operation at the start of cooldown to very little at the end of cooldown.

f Includes FPC room cooler.

** Drywell (B) and RIP coolers.

†† Reactor Building sampling coolers; LCW sump coolers (in drywell and reactor building), RIP MG sets and CUW pump coolers.

Table 9.2-4c Reactor Building Cooling Water Division C

Operating Mode/Components	Normal Operating Conditions		Shutdown at 4 Hours		Shutdown at 20 Hours		Hot Standby (No Loss of AC)		Hot Standby (Loss of AC)		Emergency (LOCA) (Suppression Pool at 97°C	
	Heat*	Flow*	Heat	Flow	Heat	Flow	Heat	Flow	Heat	Flow	Heat	Flow
Essential												
Emergency Diesel Generator C	—	—	—	—	—	—	—	—	13.40	229	13.40	229
RHR Heat Exchanger C	—	—	108.02	1,199	34.75	1,199	—	—	25.54	1,199	89.18	1199
Others (essential)†	6.28	360	6.70	360	6.70	360	6.28	360	6.70	360	7.12	360
Non-Essential												
Others (non-essential)‡	20.51	422	19.26	422	7.54	422	20.51	422	0.54	50	0.75	50
Total Load	26.80	782	133.98	1,981	48.57	1,981	26.80	782	46.05	1838	110.53	1838

* Heat in GJ/h; flow in m^3/h, sums may not be equal due to rounding.

† HECW refrigerator, room coolers, motor coolers, and mechanical seal coolers for RHR and HPCF, FCS room cooler, SGTS room cooler.

‡ Instrument and service air coolers, CRD pump oil cooler, radwaste components, HSCR condenser, and turbine building sampling coolers.

Table 9.2-4d Design Characteristics for Reactor Building Cooling Water System Components

RCW Pumps (Two per division)		
	RCW (A)/(B)	**RCW (C)**
Discharge Flow Rate	1420 m^3/h/pump	1,237 m^3/h/pump
Pump Total Head	0.57 MPa	0.52 MPa
Design Pressure	1.37 MPa	1.37 MPa
Design Temperature	71°C	71°C
RCW Heat Exchangers (Three per division)		
	RCW (A)/(B)	**RCW (C)**
Capacity (for each heat exchanger)	47.73 GJ/h	44.38 GJ/h
RCW Surge Tanks		
Capacity	16 m^3 (total, each)	
Design Pressure	Static Head	
Design Temperature	71°C	
RCW Chemical Addition Tanks		
Design Pressure	1.37 MPaG	
Design Temperature	71°C	
RCW Piping		
Design Pressure	1.37 MPaG	
Design Temperature	71°C	

Table 9.2-5a Reactor Building Cooling Water Active Failure Analysis

Single Active Failure	Analysis
Failure of diesel generator to start or failure of all power to a single Class 1E power system bus	The other RCW pumps are powered and controlled from other buses which are energized from other independent diesel generators and DC buses and, therefore, provide sufficient cooling for the essential equipment. The independent RCW Systems are mechanically and electrically separated to prevent damage to one system from other systems.
Failure of pump auto start signal	Same analysis as above.
Failure of ECCS pump area air cooler	Essential plant cooling requirements are met by the redundant ECCS, which have their own independently cooled pump areas.
Failure of a single RCW pump during normal plant operation	Essential plant cooling requirements are met by the remaining operable, redundant RCW pumps.

Table 9.2-5b Reactor Building Cooling Water System Passive Failure Analysis

Single Active Failure	Analysis
Failure of any RCW System supply or return piping	Essential plant cooling requirements are met by the remaining intact RCW System, which includes their own independent supply and return service water headers. The redundant systems are mechanically and electrically separated to prevent damage to one system from the other systems.
Failure of RCW to RHR heat exchanger	Essential plant cooling requirements are met by the remaining intact redundant RHR System, which includes its own 100% capacity heat exchanger.
Failure of RCW piping to or from the air cooler for an ECCS pump area	Essential plant cooling requirements are met by the redundant ECCS which have their own independently cooled pump areas.
Failure of a single RCW heat exchanger during normal operation	Essential plant cooling requirements are met by the remaining operable, redundant heat exchanger.

Table 9.2-6 HVAC Normal Cooling Water System Component Description

HNCW Chillers	
Quantity	5 (including one standby unit)
Cooling Capacity	9.42 GJ/h each
Chilled water flow per unit	450 m^3/h
Supply temperature	7°C
Condenser water flow per unit	420 m^3/h
Supply temperature (max)	45°C
Control	Inlet guide vane
Condenser	Shell and tube
Evaporator	Shell and tube
HNCW Water Pumps	
Quantity	5 (including one standby unit)
Type	Centrifugal, horizontal
Capacity m^3/hr each	450
Total discharge head	0.49 MPa

Table 9.2-7 HVAC Normal Cooling Water Loads

Name of Area or Unit	During Normal Operation Capacity GJ/h	During Normal Operation Flow m^3/h	During Refueling Shutdown Capacity GJ/h	During Refueling Shutdown Flow m^3/h
Reactor Building				
Drywell Coolers	0.96	69.5	0.80	69.5
RIP Coolers	1.59	20.9	3.06	104
Others (Note 1)	10.05	131	18.84	636
Turbine Building (Note 2)	2.26	43.5	1.13	39
Radwaste Building (Note 4)	5.69	81.2	6.70	232
Service Building	3.64	175	3.64	175
Others (Note 5)	4.61	151	3.56	151
Total	28.89	672	37.68 (Note 6)	1,407

NOTES:

(1) Loads include reactor/turbine building supply units, HVH, FCU and room coolers.

(2) Loads are the offgas cooler condenser (normal operation only) and the electrical equipment supply unit.

(3) Deleted

(4) Loads included are the radwaste building supply unit and the radwaste building electrical equipment room supply unit.

(5) Loads include HVH units not previously included.

(6) The HNCW chillers are 9.38 GJ/h each and the pumps 449m^3/h each. Thus, four HNCW pumps have total capacity in excess of the amount required as shown in the last column of the table.

Table 9.2-8 HECW System Component Description*

HECW Chillers		
Quantity		6
Capacity (Refrigerator)	six	2.51 GJ/h
Chilled water pump flow	six	57 m^3/h
Supply temperature		7°C
Condenser water flow	six	128 m^3/h
Supply temperature (max.)		45°C
Condenser	Shell and tube	
Evaporator	Shell and tube	
HECW Water Pumps		
Quantity		6 (57 m^3/h each)
Type		Centrifugal, horizontal

* Each of Divisions A, B, and C have two parallel pump-refrigerator units.

Table 9.2-9 HVAC Emergency Cooling Water System Heat Loads

		Normal		Emergency	
Division	System	Heat Load (GJ/h)	Chilled Water Flow (m^3/h)	Heat Load (GJ/h)	Chilled Water Flow (m^3/h)
A	Reactor Building Electrical Equipment Room (A)	0.88	14.3	0.88	14.3
	Control Building Electrical Equipment Room (A)	1.26	20.2	1.26	20.2
	Total	2.14	34.5	2.14	34.5
B	Main Control Room	1.42	26	1.30	24
	Reactor Building Electrical Equipment Room (B)	0.92	15	0.92	15
	Control Building Electrical Equipment Room (B)	1.26	20.2	1.26	20.2
	Total	3.60	61.2	3.48	59.2
C	Main Control Room	1.42	26	1.30	24
	Reactor Building Electrical Equipment Room (C)	0.92	15	0.92	15
	Control Building Electrical Equipment Room (C)	1.26	20.2	1.26	20.2
	Total	3.6	61.2	3.48	59.2

Table 9.2-10 HVAC Emergency Cooling Water System Active Failure Analysis

Failure of diesel generator to start or failure of all power to a single Class 1E power system bus.	Loss of one refrigerator and pump in Division B or C would not permit sending chilled water to the Control Room Habitability Area HVAC System from the affected division. The other HECW division would send chilled water to the Control Room Habitability Area HVAC System which would maintain adequate cooling. In Division A, loss of both of the refrigerators or the pumps would result in loss of cooling water flow to Division A Control Building safety-related Equipment Area HVAC System and Reactor Building safety-related Electrical Equipment HVAC System. Cooling of Control Room Habitability Area HVAC System not affected.
Failure of auto pump or refrigerator signal.	Same analysis as above.
Failure of a single HECW refrigerator.	Same analysis as above.
Failure of a single HECW pump.	Same analysis as above.
Failure of HECW pump and refrigerator room cooling.	Same analysis as above.

Table 9.2-11 Turbine Island Auxiliary Equipment

The TCW System removes heat from the following components:

- HVAC normal cooling water chillers
- Generator stator coolers, hydrogen coolers, seal oil coolers, exciter coolers and breaker coolers
- Turbine lube coolers
- Mechanical vacuum pump coolers
- Isophase bus coolers
- Electro-hydraulic control coolers
- Reactor feed pump and auxiliary coolers
- Standby reactor feed pump motor coolers
- Condensate pump motor coolers
- Heater drain pump motor coolers

Table 9.2-12 Not Used

Table 9.2-13 Reactor Service Water System (Interface Requirements)

RSW Pumps (Two per division)	
Discharge flow rate, per pump	1,800 m^3/h
Pump total head	0.34 MPa
Design pressure	0.79 MPa
Design temperature	50°C
RSW Piping and Valves	
Design pressure	1.08 MPa
Design temperature	50°C

Table 9.2-14 Potable and Sanitary Water System Components (Interface Requirements)

Component	Major Design Features
All tanks are vertical, cylindrical type except where noted. All water pumps are horizontal, centrifugal and single stage. All chemical feed pumps are positive displacement diaphragm type.	
Potable Water Storage Tank	
Capacity	23 m^3
Potable Water Pump	
Quantity	2
Capacity	23 m^3/h
Head	18 m
Hypochlorinator Pump	
Capacity	0.6 m^3/h
Head	9m
Hypochlorite Tank	
Capacity	0.2 m^3
Hydropneumatic Pressure Tank	
Type	Horizontal, cylindrical
Capacity	15 m^3
Design pressure	1.03 MPaG
Air Compressor	
Type	Piston, single-stage
Capacity	5 m^3/min
Discharge pressure	0.8 MPaG
Comminutor	
Type	Revolving vertically-slotted drum
Aeration Tank	
Quantity	2
Volume	25 m^3 each
Clarifier	
Quantity	1 large, 2 small
Volume	19m^3, 7m^3
Hypochlorite Contact Tank	
Volume	4.25 m^3

Table 9.2-14 Potable and Sanitary Water System Components (Interface Requirements) (Continued)

Component	Major Design Features
Aerobic Digester	
Quantity	2
Volume	25 m^3 each
Air Blower	
Quantity	3
Capacity	0.34 m^3/min each
Froth Spray Pump	
Capacity	6 m^3/h
Head	30 m
Hypochlorite Feed Pump	
Capacity	1.5 m^3/h
Head	30 m
Hypochlorite Tank	
Capacity	0.4 m^3

Table 9.2-15 Makeup Water Preparation System Component (Interface Requirements)

Component	Major Design Features
All tanks are vertical, cylindrical type. All water pumps are horizontal, centrifugal and single-stage except the RO feed pumps. All chemical feed pumps are positive displacement, diaphragm type.	
Well	
Capacity	At least 450 m^3/h
Well Water Tank	
Capacity	38 m^3
Well Water Pumps	
Quantity	2
Capacity	230 m^3/h
Filters	
Quantity	2
Capacity	230 m^3/h each
Type	Pressure type, dual media
Filtered Water Storage Tank	
Capacity	150 m^3
Backwash Pumps	
Quantity	2
Capacity	450 m^3/h each
Head	27m
RO Feed Pumps	
Quantity	4
Type	Horizontal, multistage
Capacity	45 m^3/h
Head	2.75 to 3.43 MPaG
RO First Pass	
Quantity	2
Type	2-to-1 array of thin film composite membranes
Capacity	68 m^3/h permeate each with 25% rejection
RO Second Pass	
Quantity	2

Table 9.2-15 Makeup Water Preparation System Component (Interface Requirements) (Continued)

Component	Major Design Features
Type	1-to-1 array of thin film composite membranes
Capacity	45 m^3/h permeate each with 33% rejection
RO Permeate Storage Tank	
Capacity	20 m^3
Demineralizer Feed Pumps	
Quantity	4
Capacity	23 m^3/h each
Head	16m
Demineralizers	
Quantity	6
Capacity	23 m^3/h each
Resin	1.1m^3 of 1:2 cation/anion resin each
Demineralized Water Storage Tanks	
Quantity	2
Capacity	380 m^3, each
Demineralized Water Forwarding Pumps	
Quantity	3
Capacity	45 m^3/h
Chemical Feed Tank (NaHMP)	
Capacity	0.8 m^3
Chemical Feed Pump (NaHMP)	
Quantity	2
Capacity	0.04 m^3/h each
Chemical Feed Tank (NaOH)	
Capacity	1.5m^3
Chemical Feed Pump (NaOH)	
Quantity	4 (three normally operating with one spare)
Capacity	0.04 m^3/h

Table 9.2-16 Turbine Service Water System (Interface Requirement)

TSW Pumps (Three 50% pumps)	
Discharge Flow Rate	3400 m^3/h per pump
Pump Total Head	0.20 MPaG
Design Pressure	0.59 MPaG
Design Temperature	40°C
TSW Piping and Valves	
Design Pressure	0.59 MPaG
Design Temperature	40°C

The following figures are located in Chapter 21 :

Figure 9.2-1 Reactor Building Cooling Water System P&ID (Sheets 1–9)

Figure 9.2-1a Not Used

Figure 9.2-2 HVAC Normal Cooling Water System P&ID

Figure 9.2-3 HVAC Emergency Cooling Water System P&ID (Sheets 1–3)

Figure 9.2-4 Makeup Water (Condensate) System P&ID

Figure 9.2-5 Makeup Water (Purified) System P&ID (Sheets 1–3)

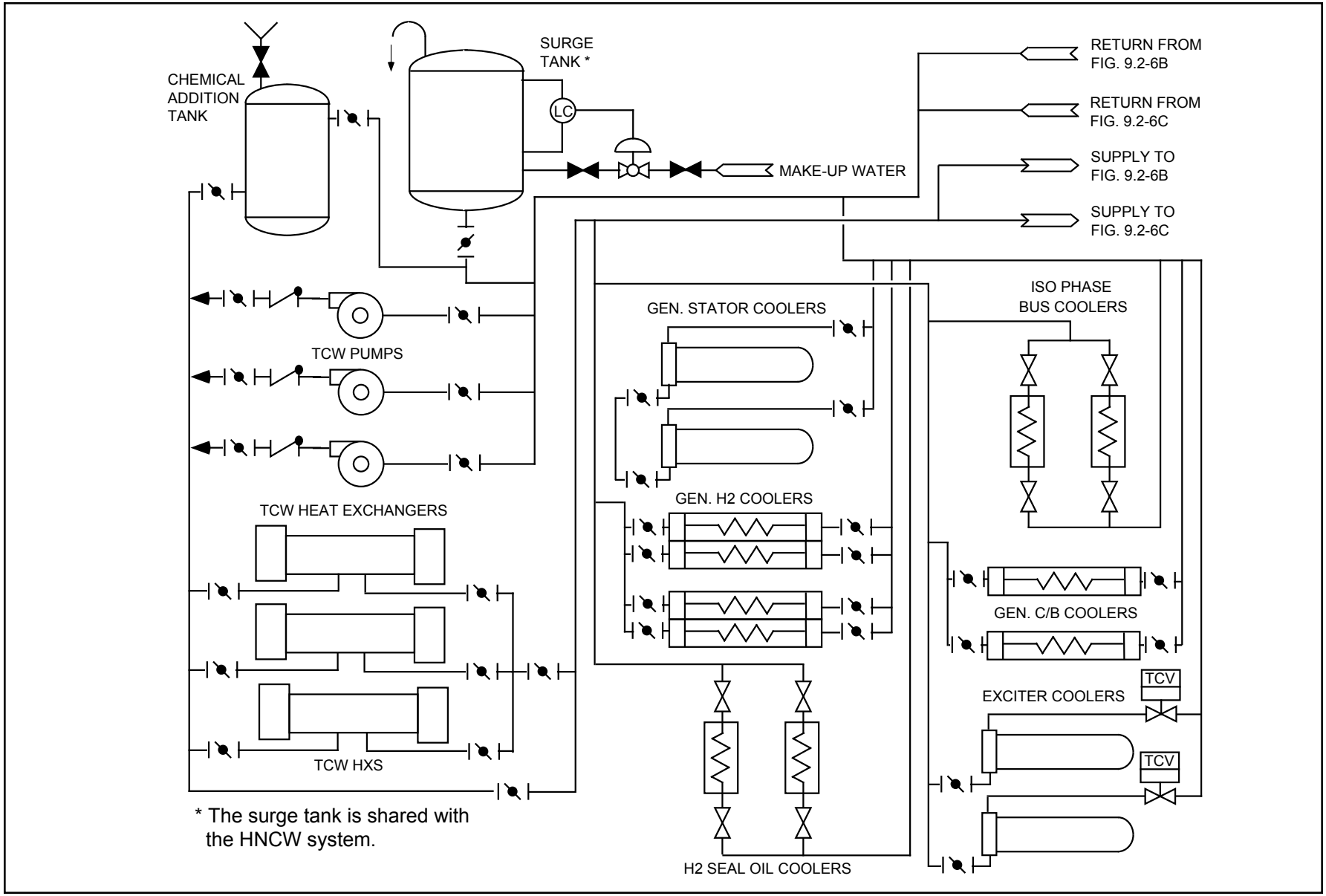

Figure 9.2-6a Turbine Building Cooling Water System Diagram

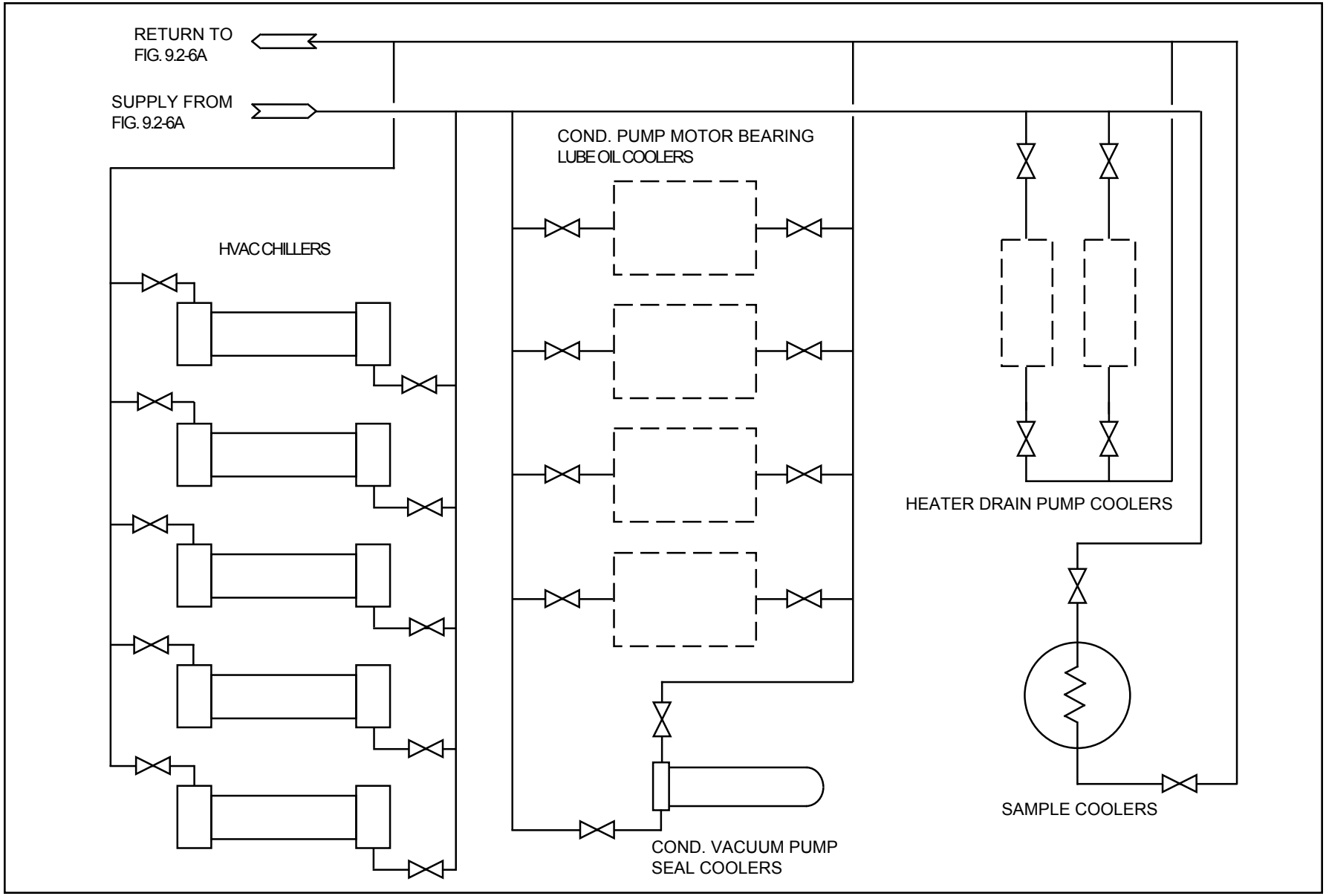

Figure 9.2-6b Turbine Building Cooling Water System Diagram

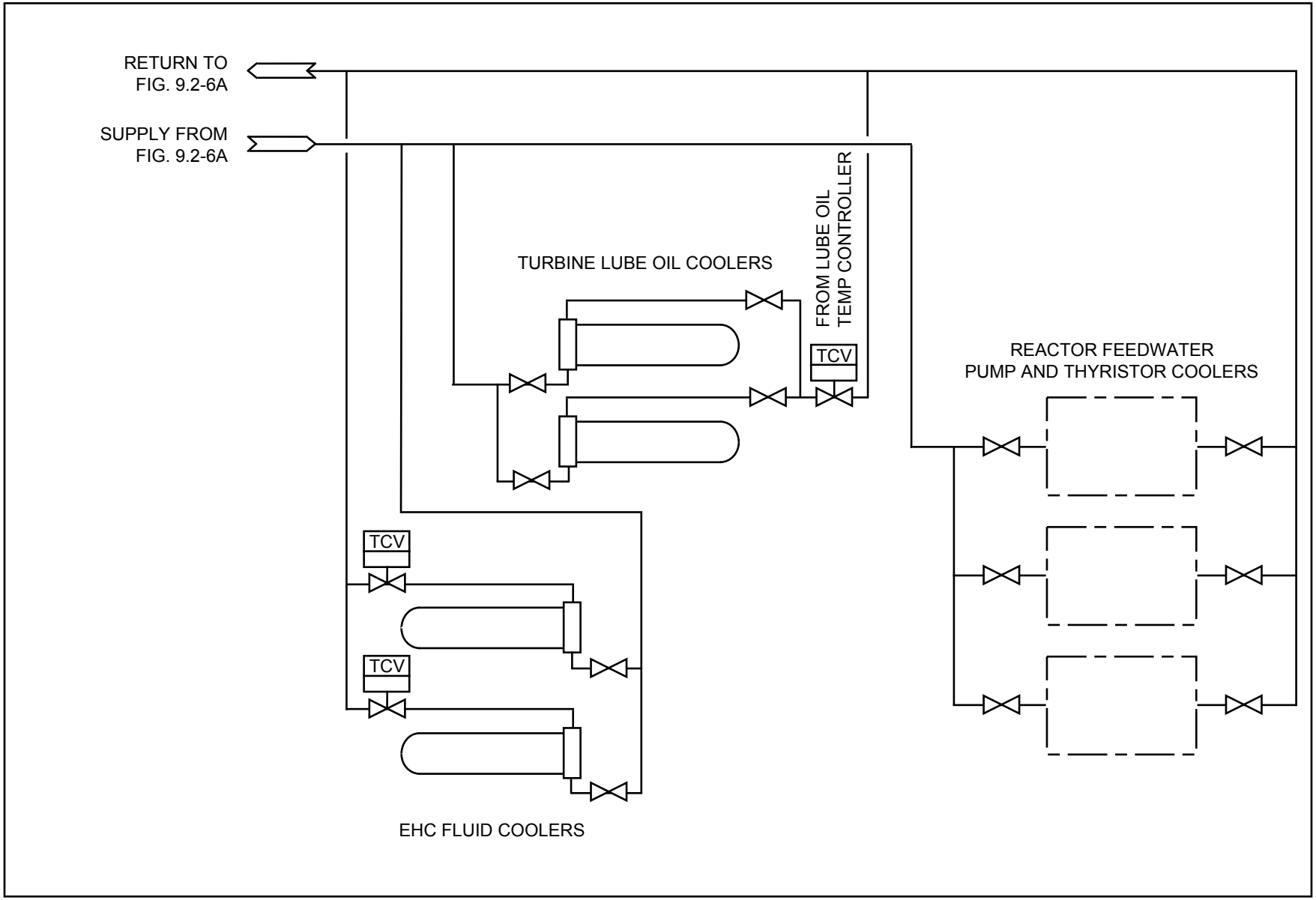

Figure 9.2-6c Turbine Building Cooling Water System Diagram

The following figure is located in Chapter 21:

Figure 9.2-7 Reactor Service Water System P&ID (Sheets 1–3)

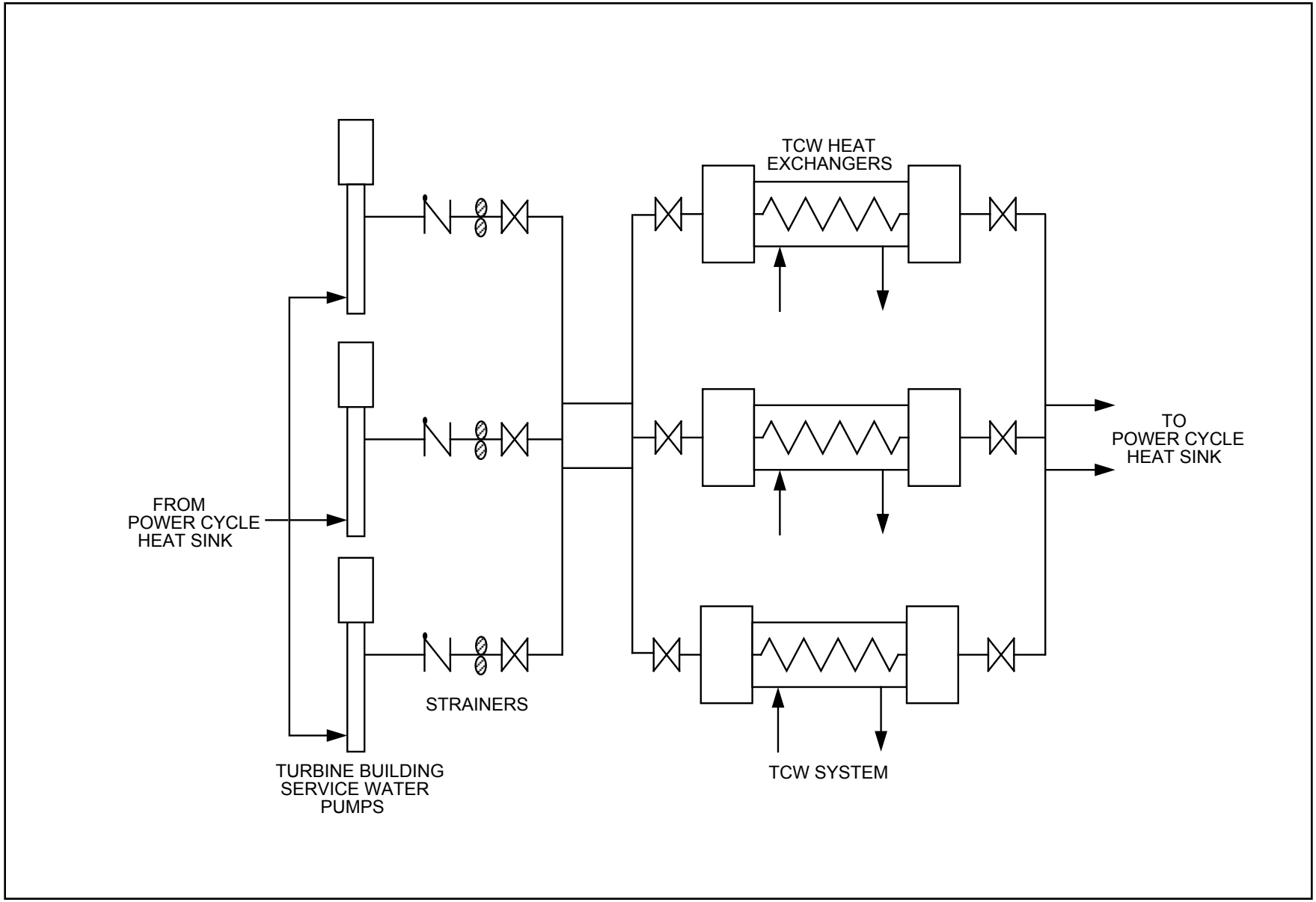

Figure 9.2-8 Turbine Building Service Water System

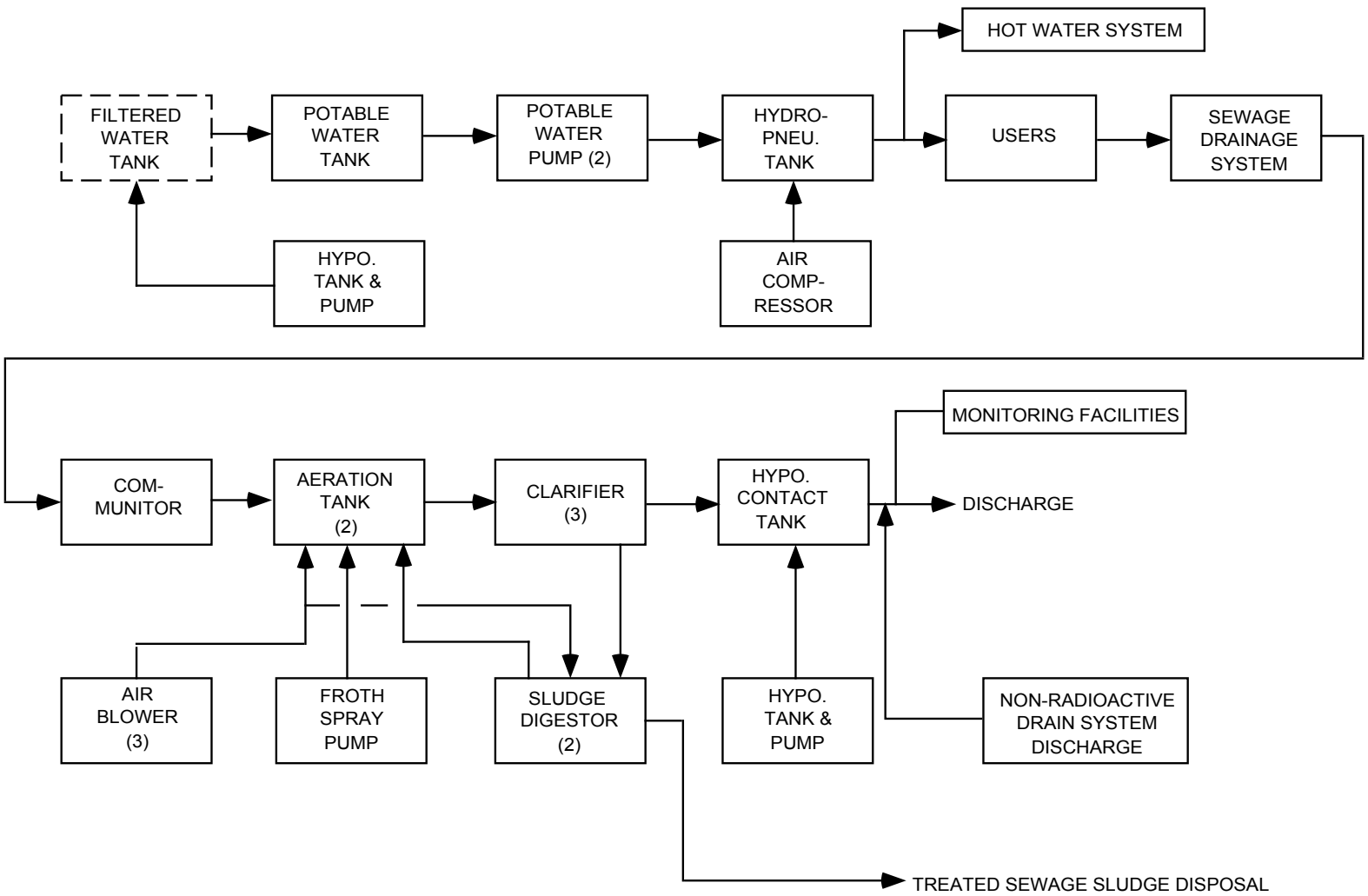

Block Flow Diagram
(Interface Requirements)

Figure 9.2-9 Potable and Sanitary Water System

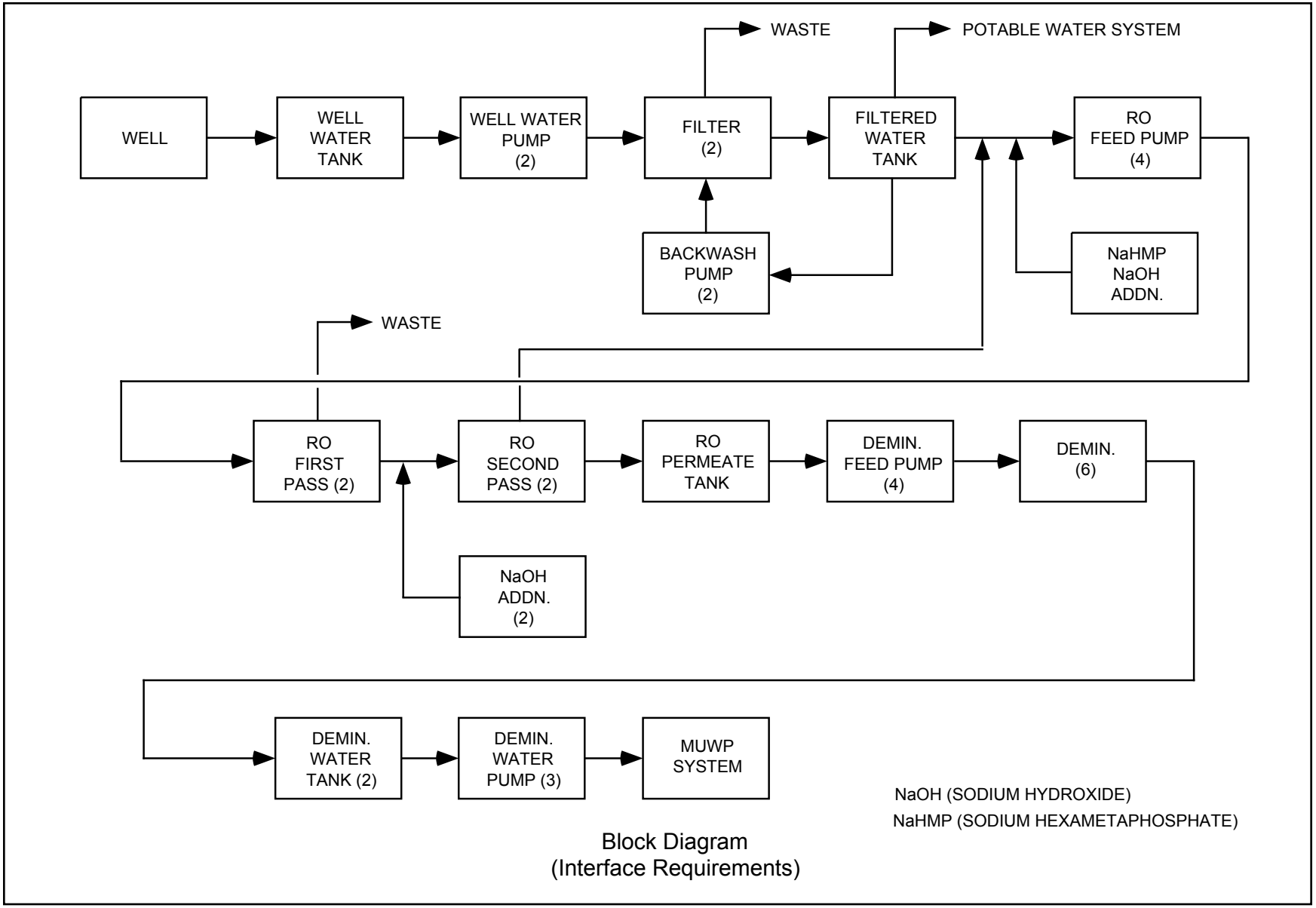

Figure 9.2-10 Makeup Water Preparation System

9.3 Process Auxiliaries

9.3.1 Compressed Air Systems

The Instrument Air System is discussed in Section 9.3.6 and the Service Air System is discussed in Section 9.3.7. Neither of these systems is safety-related. The Atmospheric Control System and the High Pressure Nitrogen System provide nitrogen gas for safety-related uses. They are discussed in Subsection 6.2.5 and Section 6.7, respectively.

9.3.2 Process and Post-Accident Sampling System

9.3.2.1 Design Bases

9.3.2.1.1 Safety Design Bases

(1) The seismic design and quality group classifications of sample lines and their components shall conform to the classification of the system into which they are connected, up to and including the block valve (or valves), or, in the case of the reactor water sampling lines, the second isolation valve.

(2) Sampling points located inside the containment should, if possible, terminate at a sampling station within containment.

(3) All sampling lines shall have the process isolation valves located as close as practicable to the process taps. These valves may be closed if sample line rupture occurs downstream of the valves. These valves are closed automatically if either a containment isolation or safety injection signal is received. All isolation valves fail closed on loss of pneumatic pressure.

(4) The sampling panels are designed to minimize contamination and radiation at the sample stations. Appropriate shielding, where required, and area radiation monitors minimize radiation effects. Radiation exposure to the individual shall be limited as given in ITAAC 3.7.

(5) A post-accident sampling station (PASS) is provided to obtain reactor coolant and other samples following an accident.

9.3.2.1.2 Power Generation Design Bases

(1) The Process Sampling System (PSS) shall collect representative liquid samples for analysis and provide the analytical information required to monitor plant and equipment performance and changes to operating parameters.

(2) The PSS is designed to function during all plant operational modes under individual system requirements. Design guidelines related to PSS capabilities, the attainment of representative samples and safety are described in the following paragraphs and in Table 9.3-2.

9.3.2.2 System Description

9.3.2.2.1 General Description

The PSS provides sampling of all principal fluid process streams associated with plant operation. The PSS consists of:

(1) Permanently installed sampling nozzles and sample lines

(2) Sampling panels with analyzers and associated sampling equipment

(3) Provisions for local grab sampling

(4) Permanent shielding

(5) Casks for storing and transporting samples

9.3.2.2.2 Sampled Process Streams and Analyzed Parameters

Table 9.3-2 provides a list of sample points, their locations and analyzed parameters.

9.3.2.2.3 Provisions for Obtaining Representative Samples

(1) Where practicable, a sample takeoff connection is located in a turbulent flow zone, where fluids are well mixed, after a minimum straight run of three pipe diameters of process pipe (when possible, a straight run of 10 diameters is preferred).

(2) Connection to tap off is made on the side of horizontal process pipe runs.

(3) Sampling nozzles designed for insertion into the streams are provided for process pipes 6.35 cm and larger, unless the process or fluid conditions dictate otherwise. See Figures 9.3-4 and 9.3-5 for general design features of the sampling probes.

(4) Sampling lines are sized to maintain turbulent flow and to minimize purge time. Routing is as short and as straight as possible. Large radius bends are used to avoid traps and dead legs.

(5) Sampling nozzles, lines and associated valves and fittings are fabricated from stainless steel.

(6) Heat tracing of sampling lines is provided where necessary to prevent crystallization or solidification of contents.

(7) Sample coolers are provided for temperature control when required.

(8) Sampling equipment is designed for flushing and blowdown in order to remove sediment deposits, air and gas packets. Provisions are made to purge sample lines. All flushings are either returned to process or sent to the radwaste system, except where noted.

(9) Provisions are made to sample the bulk volume of tanks. The Standby Liquid Control System storage tank may be sampled from the top opening so that any low points and potential sediment traps can be avoided.

9.3.2.3 Sampling Panels

Different process conditions, water quality and analyzing equipment require special treatment of individual sample streams.

9.3.2.3.1 Reactor Building Sample Station

The Reactor Building Sample Station is located in the Reactor Building. Process samples from the following streams are routed to this panel for analysis:

- Reactor water cleanup inlet (hi-temp)
- Reactor water cleanup inlet (lo-temp)
- Reactor water cleanup outlet A
- Reactor water cleanup outlet B
- Control Rod Drive System

Isolation valves are provided for each reactor water sample line. These valves are operated from the main control room and close automatically upon a LOCA signal. These valves may be opened for sampling during an accident without removing the LOCA signal.

The Reactor Building Sample Station consists of a sample conditioning rack, constant temperature bath and a chemical fume hood. A continuous purge flow from the selected process stream enters the sample conditioning rack (>500 mL/min.) and through a cooler, if necessary, to reduce temperature to 41°C or lower, then through one or two flow adjustment valves, depending on inlet pressure. The purge flow is then routed through a chemical fume hood where grab samples can be removed or special measurements made. A small, continuous sample (>100 mL/min.) is diverted from the main purge flow line through a cooling coil located in a constant temperature bath, past a temperature gauge, a conductivity cell, flow switch, rotameter and a pressure regulating check valve. The constant temperature bath controls the sample temperature to 25°C . A continuous conductivity recorder records the conductivity.

Main purge flow and sample flow are in closed lines and are routed through closed drains to the reactor building equipment drain sump.

The Post-Accident Sampling System (PASS) consists of a sample holding rack, sampling rack, sample conditioning rack, local control panel and shielding casks. Samples from the sample conditioning rack, discussed above, are sent to the PASS sample holding rack. A portion of the sample flow is passed through an inline sample vessel. After adequate purging, the sample vessel is isolated and transported to the laboratory. All valves in this operation are operated remotely. The sampling system isolation valves are operated from the main control room and all other valves are operated from the local control panel. After the sample vessel has been isolated and removed, the piping is flushed with demineralized water. The water from purging and flushing is drained to the suppression pool.

The sample holding rack has an enclosure around the sample vessel to contain any leaks of liquids or gases. The liquids drain to the radwaste system and the gases go to the reactor building exhaust system.

The PASS isolation valves shall be connected to a reliable source of power that will be available starting at least one hour after a LOCA or ATWS event. The isolation valves shall have Class 1E power and the panels and other equipment shall be powered with two offsite power supplies and one onsite power supply.

Gas samples are obtained from a sample line connected to the Containment Atmospheric Monitoring System (CAMS). A vacuum pump is provided to transfer the gas sample from a sample holding rack to a sampling rack. The sample is mixed uniformly. In the sampling rack, the gas is passed through and collected in a gas sample holder. After isolation, the gas sample holder is removed and transported to the laboratory for analysis.

The upper limits for activity levels in liquid and gas samples are:

Liquid samples	3.70E+10 Bq/cm^3
Gas samples	3.70E+09 Bq/cm^3

Means to reduce radiation exposure are provided such as, shielding, remotely operated valves, and sample transporting casks. The radiation exposure to any individual shall not be in excess of .05 and .50 Sv to the whole body or extremities, respectively.

Acceptance Criterion II.K.5 of SRP Section 9.3.2 requires the capability of sampling liquids of 37.0E+10 Bq/cm^3. The ABWR design has the capability of sampling liquids of 3.70E+10 Bq/cm^3. Sampling will be performed and area radiation measurement will be

performed. If levels are above safe limits, handling samples will be delayed. The area radiation levels are safe when the sample radioactivity is about 3.70E+10 Bq/cm^3 or less.

When the sample radioactivity level is higher than 3.70E+10 Bq/cm^3, abnormal or emergency conditions will be used to assess the situation.

During abnormal or emergency conditions, the immediate responses of the control room personnel are as discussed in Subsection 18.4.2.11, Safety Parameter Display System, and Subsection 18A.13, Contingency #6, Primary Containment Flooding. Whenever core uncovering is suspected, the reactor vessel is depressurized. Thus, pressurized reactor water samples are not necessary.

Reactor water gross activity and radioisotopic analysis are obtained to aid in planning an accident recovery strategy.

9.3.2.3.2 Feedwater Corrosion Product Monitor

The Feedwater Corrosion Product Monitoring System panel is used to monitor feedwater quality, measure metallic impurities and measure dissolved oxygen. The panel is located in the Turbine Building. The sample probe is located downstream of the feedwater heaters.

The monitoring system consists of feedwater sample conditioning equipment and metal impurity collection equipment. Valves and coolers reduce the pressure and temperature of the sample. A sample of the suspended solids is normally collected on inline membrane filters for 24-hr periods at a measured flow rate of 100 mL/min.

9.3.2.3.3 Residual Heat Removal, Fuel Pool and Suppression Pool Sampling

Residual Heat Removal (RHR) System process samples are withdrawn for conductivity analysis. Conductivity monitoring is performed on a continuous basis. Grab samples are available at the station for purposes of instrument calibration and any special laboratory analysis desired during operation of the RHR System.

Fuel pool water can be continuously monitored for conductivity at both inlet and outlet of the fuel pool filter demineralizers. Grab sample facilities are also provided at each station.

Suppression pool monitoring is performed while monitoring the RHR System.

9.3.2.3.4 Turbine Building Condensate Sampling

Required conductivity instrumentation for the Turbine Building Condensate System is outlined in Table 9.3-2 and contained in the Turbine Building Sample Station. The sample probe is shown in Figure 9.3-4.

9.3.2.3.5 Radwaste System Sampling

The Radwaste System Sampling Station is located in the Radwaste Building. This station maintains continuous conductivity monitoring of radwaste samples drawn from selected locations in the Radwaste System. Facilities for obtaining grab samples with fume hood and exhaust fan are included.

9.3.2.4 Sample Probe Design

Condensate and feedwater sample probes are constructed in accordance with Figure 9.3-4. All other probes are constructed in accordance with Figure 9.3-5.

9.3.2.5 Sample Piping Design

The design conditions of the Sampling System shall be the same as the design conditions of the process piping with the following exceptions.

(1) If a pressure reducing device is installed with a relief valve on its downstream side, the maximum pressure shall be the set value of the relief valve.

(2) Sample piping downstream of a sample cooler shall have a maximum temperature which is the outlet temperature of the sample cooler.

Sample lines are routed to be as short as possible, avoiding traps, dead legs and dips upstream of the sample stations. Lines are sized to maintain turbulent flow with Reynolds Number > 4000 at the minimum required flow for each sample line. Minimum sample purge flow for any line is 500 mL/min at 38°C.

9.3.2.6 Safety Evaluation—Operator Safety

The Reactor Building Sample Station, Radwaste System Sample Station, Post-Accident Sampling Station and the Feedwater Corrosion Product Monitor System are closed systems with grab samples taken under the safety of a chemical fume hood to preclude the exposure of operating personnel to contamination hazards. A constant air velocity of 0.75 m/s is maintained through the working face of the hood to ensure that airborne contamination does not escape to the room under operating conditions.

A safety feature is incorporated in the sampling systems to prevent high-temperature water flow through the lines in the event of loss of cooling water to the sample cooler or sample flow in excess of sample cooler capacity. This feature consists of an air-operating valve which is closed on a high-temperature signal from a temperature switch located upstream of the valve. This system is failsafe because the valve closes on a loss of air temperature signal.

Safety/relief valves, vented to the drain headers, are provided in the stations. In sampling at PASS, all operations are performed remotely; therefore, operators are not exposed to samples at high or service pressures.

All sample lines connected to Seismic Category I systems are analyzed as Seismic Category I lines, up to and including the second isolation valve. The code governing the process line applies to the sample line up through the block valve or second isolation valve. Sample lines downstream of the second isolation valve are in conformance with ANSI B31.1, Power Piping Code.

9.3.2.7 Tests and Inspections

Most components are used regularly during power operation, yielding cumulative data which ensures the performance of the sampling system. Also, grab samples are used to periodically test, calibrate and check proper instrument response and calibration.

The PASS sample lines and components can be tested periodically to ensure that they are operable should an accident occur. The piping in the sample holding rack and the sampling rack can be filled, leak tested and proven operable using demineralized water or nitrogen. All valves, except the isolation valves, can be operated. After the test is completed, the demineralized water or nitrogen is sent to the radwaste system or the suppression pool.

Just prior to use, the PASS is given a confirmatory test to show that there are no leaks before sampling is begun.

9.3.2.8 Instrumentation Application

Instrumentation is provided for alarm functions, recording and analyzing the following parameters:

(1) Sample Stations.

(a) Provisions are made to stop sample flow upon detection of high-temperature sample flow leaving the sample cooler.

(b) Conductivity is measured and recorded for each sample flow. A high-conductivity alarm is provided.

(c) Provisions are made for sample flow to be indicated.

(2) Feedwater Corrosion Product Monitor.

(a) Provisions are made to stop sample flow upon detection of high-temperature sample flow leaving the sample cooler.

(b) Provisions are made for sample flow to be indicated.

(3) Additional monitoring equipment is listed in Table 9.3-2.

9.3.3 Non-Radioactive Drainage System

The non-radioactive drains are discussed in this subsection. The non-radioactive drains consist of equipment inside the standard plant buildings and COL interface requirements for that portion outside the buildings. The drains release effluent to the site-specific discharge structure. The potable and sanitary water systems (Subsection 9.2.4) includes the non-radioactive drains.

9.3.3.1 Non-Radioactive Drains

9.3.3.1.1 Safety Design Bases

(1) There shall be no interconnection between any portion of the radioactive drain transfer system and any non-radioactive waste system which permit transfer of radioactive material to the non-radioactive system.

(2) Effluent from non-radioactive systems shall be sampled prior to discharge to assure that there are no unacceptable discharges.

(3) Non-radioactive drains piping shall be non-nuclear safety class and quality group D and shall not have any effect on the operation of safety-related equipment.

(4) Any valves that are relied upon to prevent backflow shall be inspectable and testable and withstand SSE.

9.3.3.1.2 Power Generation Design Bases

(1) The drains shall be designed to collect and remove effluent from their point of origin to the site discharge structure.

(2) The sump level switches shall serve as leakage monitors for equipment or systems served by each sump. Leakage detection is also discussed in Subsection 5.2.5.

(3) Open drainage lines from areas that are required to maintain an air pressure differential are provided with a water seal.

(4) All drainage lines into each sump shall be turned down and terminated below the lowest fluid level to which the sump pump can draw.

9.3.3.1.3 System Description

The non-radioactive drain system is designed to assure that waste liquids, valve and pump leakoffs and component drains and vents are directed to the proper area for

processing. The process portion of the systems consists of sump pumps, valves and instrumentation. Sumps are provided as shown in the arrangement drawings in Section 1.2.

All drainage systems are essentially passive systems down to the sumps or yard pipe connections. That is, flow is by gravity with no valves, pumps, and the like in the lines such that failure could cause a system not to drain. All exposed drainage piping is seismically analyzed to remain intact following an SSE, and thus will drain the area as required (Subsection 3.4.1).

Unacceptable flooding consequences are precluded by the capacity of the drain and the placement of safety-related equipment on raised pads or grating. Also, check valves in sump pump discharge lines prevent reverse flow from other sumps that have piping to common collection tanks.

The design of the drain system precludes release to the environs or radioactive liquid. As a backup, however, all non-radioactive drain systems are sampled for radioactivity prior to release to the environs.

9.3.3.1.4 System Operation and Component Description

The drain system is similar in operation and component descriptions as discussed in Subsections 9.3.8.2.2 and 9.3.8.2.3 excepting radiation effects and the interfacing discharge process in lieu of discharge to radwaste.

9.3.3.1.5 Safety Evaluation

The non-radioactive drains are not safety-related. The sumps may be instrumented and alarmed as required to assure there is no effect on safety-related equipment.

9.3.3.2 Non-Radioactive Drains (Interface Requirement)

The COL applicant shall provide the continuation of the drain system from the standard plant buildings to the site discharge structure. A conceptual design continuation is discussed in this subsection.

9.3.3.2.1 Safety Design Bases (Interface Requirement)

The safety design bases are the same as listed in Subsection 9.3.3.1.1.

9.3.3.2.2 Power Generation Design Bases (Interface Requirement)

The power generation design bases is the same as listed in Subsection 9.3.3.1.2.

9.3.3.2.3 System Description (Conceptual)

The non-radioactive drain system collects waste water from the following sources: plant buildings (reactor, turbine, radwaste, service and other buildings), precipitation and other surface runoff. A system composed of collection piping, curb and gutter inlets, manholes and pumps is provided. Waste water is sent to dual settling basins where suspended solids are settled and oil is collected on the surface. Means are provided to perform any required tests or analyses required by the discharge permit. Periodically, one of the basins is taken out of service and the suspended solids and oil are removed.

9.3.3.2.4 Safety Evaluation (Interface Requirement)

The safety evaluation is the same as Subsection 9.3.3.1.5.

9.3.3.2.5 Instrumentation (Interface Requirement)

Provisions for obtaining water samples from the non-radioactive drain system shall be provided. A sampling and analysis program shall be provided to show that radioactive liquids are not being discharged from the non-radioactive drain system.

9.3.4 Chemical and Volume Control System (PWR)

(Not applicable to a BWR)

9.3.5 Standby Liquid Control System

9.3.5.1 Design Bases

9.3.5.1.1 Safety Design Bases

The Standby Liquid Control System (SLCS) has a safety-related function and is designed as a Seismic Category I system. It shall meet the following safety design bases:

(1) Backup capability for reactivity control shall be provided, independent of normal reactivity control provisions in the nuclear reactor, to be able to shut down the reactor if normal control ever becomes inoperative.

(2) The backup system shall have the capacity for controlling the reactivity difference between the steady-state rated operating condition of the reactor with voids and the cold shutdown condition, including shutdown margin, to assure complete shutdown from the most reactive conditions at any time in core life.

(3) The time required for actuation and effectiveness of the backup control shall be consistent with the nuclear reactivity rate of change predicted between rated operating and cold shutdown conditions. A fast scram of the reactor or operational control of fast reactivity transients is not specified to be accomplished by this system.

(4) Means shall be provided by which the functional performance capability of the backup control system components can be verified periodically under conditions approaching actual use requirements. Demineralized water, rather than the actual neutron absorber solution, can be injected into the reactor to test the operation of all components of the redundant control system.

(5) The neutron absorber shall be dispersed within the reactor core in sufficient quantity to provide a reasonable margin for leakage or imperfect mixing.

(6) The system shall be reliable to a degree consistent with its role as a special safety system; the possibility of unintentional or accidental shutdown of the reactor by this system shall be minimized.

9.3.5.2 System Description

The SLCS (Figure 9.3-1) is automatically initiated or can be manually initiated through the keyboard switches in the main control room to pump a boron neutron absorber solution into the reactor if the operator determines the reactor cannot be shut down or kept shut down with the control rods. Once the operator decision for initiation of the SLCS is made, the design intent is to simplify the manual process by providing dual keylocked switches. This prevents inadvertent injection of neutron absorber by the SLCS. However, the insertion of the control rods is expected to assure prompt shutdown of the reactor should it be required.

The keylocked control room switch is provided to assure positive action from the main control room should the need arise. Procedural controls are applied to the operation of the keylocked control room switch.

The SLCS is required only to shut down the reactor and keep the reactor from going critical again as it cools.

The SLCS is needed only in the improbable event that not enough control rods can be inserted in the reactor core to accomplish shutdown and cooldown in the normal manner.

The boron solution tank, the test water tank, the two positive displacement pumps, the two motor-operated injection valves, the two motor-operated pump suction valves, and associated local valves, panel, and controls are located in the secondary containment outside the drywell and wetwell. The liquid is piped into the reactor vessel throughout

the high pressure core flooder (HPCF) line downstream of the HPCF inboard check valve.

The boron absorbs thermal neutrons and thereby terminates the nuclear fission chain reaction in the uranium fuel.

The specified neutron absorber solution is sodium pentaborate ($Na_2B_{10}O_{16}$. $10H_2O$). It is prepared by dissolving stoichiometric quantities of borax and boric acid in demineralized water. An air sparger is provided in the tank for mixing. To prevent system plugging, the tank outlet is raised above the bottom of the tank.

At all times when it is possible to make the reactor critical, the SLCS shall be able to deliver enough sodium pentaborate solution into the reactor (Figure 9.3-2) to assure reactor shutdown. This is accomplished by placing sodium pentaborate in the SLCS tank and filling it with demineralized water to at least the low level alarm point. The solution can be diluted with water to within 36 cm of the overflow level volume to allow for evaporation losses or to lower the saturation temperature.

The minimum temperature of the fluid in the tank and piping shall be consistent with that obtained from Figure 9.3-3 for the solution temperature. The saturation temperature of the recommended solution is 15°C at the low level alarm volume and a lower temperature at 36 cm below the tank overflow volume (Figures 9.3-2 and 9.3-3). The equipment containing the solution is installed in a room in which the air temperature is to be maintained within the range of 15°C to 38°C. An electrical resistance heater system provides a backup heat source which maintains the solution temperature at 24°C (automatic operation) to 30°C (automatic shutoff) to prevent precipitation of the sodium pentaborate from the solution during storage. High or low temperature, or high or low liquid level, causes an alarm in the control room.

The pump and system design pressure between the injection valves and the pump and system design pressure between relief valves are approximately 10.79 MPaG. To prevent bypass flow from one pump in case of relief valve failure in the line from the other pump, a check valve is installed downstream of each relief valve line in the pump

The SLCS is automatically initiated after receiving an anticipated transient without scram (ATWS) signal or can be manually actuated by either of two keylocked, spring-return switches on the control room console. This assures that switching from the STOP position is a deliberate act. Changing either switch status to START starts an injection pump, opens one motor-operated injection valve, opens one pump suction motor-operated valve, and closes the Reactor Cleanup System isolation valves to prevent loss of boron.

An ATWS condition exists when either of the following occurs:

(a) High RPV pressure (7.76 MPaG) and startup range neutron monitor (SRNM) not downscale for 3 minutes, or

(b) Low RPV level (Level 2) and SRNM not downscale for 3 minutes.

A light in the control room indicates that power is available to the pump motor contactor and that the contactor is deenergized (pump not running). Another light indicates that the contactor is energized (pump running).

Storage tank liquid level, tank outlet valve position, pump discharge pressure, and injection valve position indicate that the system is functioning. If any of these items indicates that the liquid may not be flowing, the operator shall immediately change the other switch to the START mode, thereby activating the redundant train of the SLCS. The local switch cannot prevent the operation of the pump from the control room. Pump discharge pressure and valve status are indicated in the control room.

Equipment drains and tank overflow are not piped to the Radwaste System but to separate containers (such as 208L drums) that can be removed and disposed of independently to prevent any trace of boron from inadvertently reaching the reactor.

Instrumentation consisting of solution temperature indication and control, solution level and heater system status is provided locally at the storage tank. Table 9.3-1 contains the process data for the various modes of operation of the SLCS. Seismic category and quality class are included in Table 3.2-1. Principals of system testing are discussed in Subsection 9.3.5.4.

9.3.5.3 Safety Evaluation

The SLCS is a reactivity control system and is maintained in an operable status whenever the reactor is critical. The system is never expected to be needed for safety reasons because of the large number of independent control rods available to shut down the reactor.

To assure the availability of the SLCS, two sets of the components required to actuate the system (pumps and injection valves) are provided in parallel redundancy.

The system is designed to bring the reactor from rated power to a cold shutdown at any time in core life. The reactivity compensation provided will reduce reactor power from rated to zero level and allow cooling of the nuclear system to room temperature, with the control rods remaining withdrawn in the rated power pattern. It includes the reactivity gains that result from complete decay of the rated power xenon inventory. It also includes the positive reactivity effects from eliminating steam voids, changing water density from hot to cold, reduced Doppler effect in uranium, reducing neutron leakage from boiling to cold, and decreasing control rod worth as the moderator cools.

To meet this objective, it is necessary to inject a quantity of boron which produces a minimum concentration of 850 parts per million (ppm) by weight of natural boron in the reactor core at 20°C. To allow for potential leakage and imperfect mixing in the reactor system, an additional approximately 25% (220 ppm) is added to the above requirement, resulting in a total requirement of greater than or equal to 1070 ppm. The required concentration is thus achieved in a mass of water equal to the sum of the mass of water in the RPV at normal water level (equal to or less than 455 x 10^3 kg) plus the mass of water in the RPV shutdown cooling piping (equal to or less than 130 x 10^3 kg). The quantity of boron solution contained in the storage tank above the pump suction shutoff level provides the required concentration of 1070 ppm when injected into the reactor, and this concentration will be achieved if the solution is prepared as defined in Subsection 9.3.5.2 and maintained above saturation temperature.

Cooldown of the nuclear system will require a minimum of several hours to remove the thermal energy stored in the reactor, cooling water, and associated equipment. The controlled limit for the reactor vessel cooldown is 56°C/hr, and normal operating temperature is approximately 288°C. Use of the main condenser and various shutdown cooling systems requires 10 to 24 hours to lower the reactor vessel to room temperature (21°C); this is the condition of maximum reactivity and, therefore, is the condition that requires the maximum concentration of boron.

The specified boron injection rate is limited to the range of 8 to 20 ppm/min. The lower rate assures that the boron is injected into the reactor in approximately two-and-one-half hours. This resulting reactivity insertion is considerably quicker than that covered by the cooldown. The upper limit injection rate assures that there is sufficient mixing so that boron does not recirculate through the core in uneven concentrations that could possibly cause reactor power to rise and fall cyclically.

The SLCS equipment essential for injection of neutron absorber solution into the reactor is designed as Seismic Category I for withstanding the specified earthquake loadings (Chapter 3). The system piping and equipment are designed, installed, and tested in accordance with the requirements stated in Section 3.6.

The SLCS is required to be operable in the event of a plant offsite power failure; therefore, the pumps, heater, valves, and controls are powered from the standby AC power supply. The pumps and valves are powered and controlled from separate buses and circuits so that a single active failure will not prevent system operation.

The SLCS and pumps have sufficient pressure margin, up to the system relief valve setting of approximately 10.79 MPaG, to assure solution injection into the reactor above the normal pressure in the bottom of the reactor. The nuclear system safety/relief valves begin to relieve pressure above approximately 7.58 MPaG. Therefore, the SLCS positive displacement pumps cannot overpressurize the nuclear system.

Only one of the two SLC pumps is needed for system operation. However, if needed, both pumps can be operated at the same time. If a redundant component (e.g., one pump) is found to be inoperable, there is no immediate threat to shutdown capability, and reactor operation can continue during repairs. The time during which one redundant component upstream of the injection valves may be out of operation should be consistent with (1) the probability of failure of both the control rod shutdown capability and the alternate component in the SLCS, and (2) the fact that nuclear system cooldown takes several hours while liquid control solution injection takes approximately two-and-one-half hours. Since this probability is small, considerable time is available for repairing and restoring the SLCS to an operable condition while reactor operation continues. Assurance that the system will still fulfill its function during repairs is obtained by demonstrating operation of the operable pump.

The SLCS is evaluated against the applicable General Design Criteria as follows:

Criterion 2—The SLCS is located in the area inside the secondary containment, outside the drywell and below the refueling floor. In this location, it is protected by the containment and compartment barriers from external natural phenomena such as earthquakes, tornadoes, hurricanes and floods and internally from effects of postulated events (e.g., DBA-LOCA).

Criterion 4—The SLCS is designed for the expected environment in the secondary containment and specifically for the area in which it is located. In this area, it is not subject to the more violent conditions postulated in this criterion such as missiles, whipping pipes, and discharging fluids.

Criterion 21—Criterion 21 is applicable to protection systems only. The SLCS is a reactivity control system and should be evaluated against Criterion 29.

Criterion 26—The SLCS is the second reactivity control system required by this criterion.

Criterion 27—This criterion applies no specific requirements onto the SLCS and therefore is not applicable. See the General Design Criteria Section for discussion of combined capability.

Criterion 29—The SLCS pumps and valves outboard of the outboard drywell check valve are redundant. Two suction valves, two pumps, and two injection valves are arranged and cross-tied such that operation of any one of each results in successful operation of the system. The SLCS also has test capability. A special test tank is supplied for providing test fluid for the yearly injection test. Pumping capability, injection valve operability and suction valve operability may be tested at any time.

The SLCS is evaluated against the applicable regulatory guides as follows:

Regulatory Guide 1.26—Because the SLCS is a reactivity control system, all mechanical components are at least Quality Group B. Those portions which are part of the reactor coolant pressure boundary are Quality Group A (Table 3.2-1).

Regulatory Guide 1.29—All components of the SLCS which are necessary for injection of neutron absorber into the reactor are Seismic Category I (Table 3.2-1).

ASB 3-1 and MEB 3-1—Since the SLCS is located within its own compartment inside the secondary containment, it is adequately protected from flooding, tornadoes, and internally/externally generated missiles. SLCS equipment is protected from pipe break by providing adequate distance between the seismic and nonseismic SLCS equipment, where such protection is necessary. In addition, appropriate distance is provided between the SLCS and other high-energy piping systems.

Barriers have been considered to assure SLCS protection from pipe break (Section 3.6).

It should be noted that the SLCS is not required to provide a safety function during any postulated pipe break event. This system is only required under an extremely low probability event, where all of the control rods are assumed to be inoperable while the reactor is at normal full power operation. Therefore, the protection provided is considered over and above that required to meet the intent of ASB 3-1 and MEB 3-1.

This system is used in special plant capability demonstration events cited in Appendix A of Chapter 15; specifically, Events 54 and 56, which are extremely low probability non-design-basis postulated incidents. The analyses given there are to demonstrate additional plant safety considerations far beyond reasonable and conservative assumptions.

9.3.5.4 Testing and Inspection Requirements

Operational testing of the SLCS is performed in at least two parts to avoid inadvertently injecting boron into the reactor.

With the valves to the reactor and from the storage tank closed, and the valves to and from the test tank opened, condensate water in the test tank can be recirculated by locally starting either pump.

During a refueling or maintenance outage, the injection portion of the system can be functionally tested by valving the suction line to the test tank and actuating the system from the control room. System operation is indicated in the control room.

After functional tests, all the valves must be returned to their normal positions as indicated in Figure 9.3-1.

After closing a local locked-open valve to the reactor, leakage through the injection valves can be detected by opening valves at a test connection in the line between the drywell check valves. Position indicator lights in the control room indicate that the local valve is closed for test or open and ready for operation. Leakage from the reactor through the first check valve can be detected by opening the same test connection in the line between the check valves when the reactor is pressurized.

The test tank contains condensate water for approximately 3 minutes of pump operation. Condensate water from the Makeup System or the Condensate Storage System is available for refilling or flushing the system.

Should the boron solution ever be injected into the reactor, either intentionally or inadvertently, then after making certain that the normal reactivity controls will keep the reactor subcritical, the boron is removed from the Reactor Coolant System by flushing for gross dilution followed by operating the Reactor Cleanup System. There is practically no effect on reactor operations when the boron concentration has been reduced below approximately 50 ppm.

The concentration of the sodium pentaborate in the solution tank is determined periodically by chemical analysis.

Electrical supplies and relief valves are also subjected to periodic testing.

The SLCS preoperational test is described in Subsection 14.2.12.

See Subsection 9.3.12.2 for COL license information pertaining to SLCS storage tank discharge valve reliability.

9.3.5.5 Instrumentation Requirements

The instrumentation and control (I&C) System for the SLCS is designed to allow the injection of liquid poison into the reactor and the maintenance of the liquid poison solution well above the saturation temperature. A further discussion of the SLCS instrumentation may be found in Section 7.4.

9.3.6 Instrument Air System

The plant compressed air systems include the Instrument and Service Air Systems.

9.3.6.1 Design Bases

9.3.6.1.1 Safety Design Bases

The Instrument Air System is classified as non-safety-related with the exception of the primary containment isolation function. The primary containment penetration of the

Instrument Air System (IAS) is of Seismic Category I design and is equipped with sufficient isolation valves to satisfy single-failure category.

9.3.6.1.2 Power Generation Design Bases

The function of the Instrument Air System is to provide clean, dry, and oil-free instrument air.

The IAS is also capable of supplying backup air to the nitrogen consumers located inside the PCV when nitrogen gas supply pressure drops below a set point.

9.3.6.2 System Description

The IAS provides dry, oil-free, compressed air for valve actuators and for non-safety-related instrument control functions and for general instrumentation and valve services outside the containment. All I&C systems located inside the containment are supplied with nitrogen gas during normal plant operation.

The instrument air flow requirements are based on experience. Two 100% air compressors and dryers are provided to supply adequate instrument air. The air compressors are of the oil-less type.

Process quality requirements are listed below:

	Instrument Air
Pressure (MPaG) (design)	0.87
Dewpoint (°C)	–40° at 0.69 MPaG
Maximum Allowed Particle Size	5 micrometer

The IAS containment penetration and associated isolation valves are designed to Seismic Category I, ASME Code, Section III, Class 2, Quality Group B and Quality Assurance B requirements. An MSIV isolation signal from the Leak Detection and Isolation System shall close the Instrument Air System outboard isolation valve F276.

The IAS is backed by the combustion turbine generator to continue operation during loss of normal power supply.

One of the two air compressors and dryers is selected as the lead unit which shall be operated during normal operation. The standby compressor and dryer will automatically start when the compressed air pressure at the air receiver drops below the low pressure setpoint. As the air receiver pressure is returned to the normal range, the

standby air compressor is stopped and the lead unit kept in operation. The assignment for lead unit and standby unit of air compressors and dryers shall be switched periodically. The pressure setpoints for these operational changes are adjustable, depending on air requirements that might exist.

During normal operation, the nonsafety-related nitrogen users within containment are downstream of P52-F277 and P54-F208. (The safety-related nitrogen users are downstream of P54-F008A and B.) Should the AC/HPIN Systems become unable to supply nitrogen to the non-safety-related users downstream of P52-F277, the operator may remote manually open P52-F257 to supply instrument air to these users (Figure 20.3.15-1).

During refueling, the IAS provides compressed air instead of nitrogen gas to the users located inside containment. The IAS P&ID is shown in Figure 9.3-6.

Acceptance Criterion II.1 of SRP Section 9.3.1 requires that the maximum particle size of 3 microns in the air stream at the instrument. The corresponding maximum particle size for the ABWR design is 5 micrometer. Experience to date for plants with a maximum filtered particle size of 5 micrometer in the compressed gases has been very satisfactory.

All equipment using instrument air shall be capable of operating with air of the quality listed above.

9.3.6.3 Safety Evaluation

The operation of the IAS is not required to assure any of the following:

(1) Integrity of the reactor coolant pressure boundary.

(2) Capability to shut down the reactor and maintain it in a safe shutdown condition.

(3) Ability to prevent or mitigate the consequences of accidents which can result in potential offsite exposures comparable to the guideline exposures of 10CFR100.

However, the IAS incorporates features that assure this operation over the full range of normal plant operations. If IAS pressure falls below a desired limit, air from the Service Air System (SAS) may be added from a tie-line. An air receiver is provided to maintain air supply pressure if all of the IAS and SAS compressors fail. Pneumatic-operated devices are designed for a failsafe mode and do not require continuous air supply under emergency or abnormal conditions.

The instrument air system does provide air service to a number of safety-related systems and components. The loss of air to these systems will result in current or new valve positions. These positions have been evaluated. The subject system safety functions have been shown to be maintained despite a disruption of air or power service to the subject valves. The safety-related systems serviced in this manner include:

(a) Reactor Building/Secondary Containment HVAC valves.

(b) HECW system valves.

(c) RCW isolation valves (to non-safety–related portions).

The MCR-HVAC System and the RB-EEE HVAC Systems do not use instrument air system sources.

9.3.6.4 Inspection and Testing Requirements

The IAS is proved operable by its use during normal plant operation. Portions of the systems normally closed to airflow can be tested to ensure operability and integrity of each system. Air quality shall be tested periodically to assure compliance with ISA S7.3.

The motor-operated isolation valve is capable of being tested to assure its operational integrity by manual actuation of a switch located in the control room and by observation of associated position indication lights.

9.3.6.5 Instrumentation Application

Instrumentation for the IAS is primarily local, consisting of pressure, differential pressure and temperature indication and/or control. Pressure transmitters and pressure switches provide control room pressure indications and alarms. The system is maintained at constant pressure, with local pressure reduction provided as required.

Pressure-reducing valves are used, where required, for services requiring less pressure than exists in the respective receiver tanks.

A motor-operated isolation valve is provided for the compressed air piping penetration through containment. The valve is remote manually closed. A remote manual switch and open/closed position lights are provided in the control room for verification of proper valve operation.

9.3.7 Service Air System

9.3.7.1 Design Bases

9.3.7.1.1 Safety Design Bases

The Service Air System is classified as non-safety-related with the exception of the primary containment isolation function. The primary containment penetration of the

SAS is of Seismic Category I design and is equipped with sufficient isolation valves to satisfy single-failure criteria.

9.3.7.1.2 Power Generation Design Bases

The functions of the SAS are to:

(1) Provide a continuous supply of service air for general plant use.

(2) Be capable of supplying backup air to the IAS on an as-needed basis.

9.3.7.2 System Description

The SAS is designed to provide compressed air of suitable quality for non-safety-related functions.

The SAS provides compressed air for tank sparging, filter/demineralizer backwashing, air operated tools and other services requiring air of lower quality than that provided by the IAS. Breathing air requirements are provided by the SAS.

The SAS has two air compressors each sized to provide 50% of the peak air consumption. The compressors are of the oil-less type. The major service air users are listed in Table 9.3-3. The SAS P&ID is shown in Figure 9.3-7.

The SAS process quality requirements are listed below.

	Service Air
Pressure (design)	0.69 MPa
Dewpoint (°C)	no requirement

The SAS containment and penetration and associated isolation valves are designed to Seismic Category I, ASME Code, Section III, Class 2, Quality Group B and Quality Assurance B requirements.

One of the two air compressors is selected as the lead unit which shall be operated during normal operation. The standby compressor will automatically start when the air pressure at the air receiver drops below the low pressure setpoint. As the air receiver pressure is returned to the normal range, the standby compressor is stopped and the lead unit kept in operation. The assignment for lead and standby air compressors shall be switched periodically. The pressure setpoints for these operational changes are adjustable, depending on air requirements that might exist.

Outside primary containment a manually-operated valve is kept closed and locked during normal plant operation. During refueling, the valve is opened to provide air inside the containment. A check valve is provided inside the containment.

9.3.7.3 Safety Evaluation

The operation of the SAS is not required to assure any of the following:

(1) Integrity to the reactor coolant pressure boundary.

(2) Capability to shut down the reactor and maintain it in a safe shutdown condition.

(3) Ability to prevent or mitigate the consequences of accidents which can result in potential offsite exposures comparable to the guideline exposures of 10CFR100.

However, the SAS incorporates features that assure this operation over the full range of normal plant operations. Pneumatic-operated devices are designed for a failsafe mode and do not require continuous air supply under emergency or abnormal conditions.

9.3.7.4 Inspection and Testing Requirements

The SAS is proved operable by its use during normal plant operation. Portions of the system normally closed to airflow can be tested to ensure operability and integrity of each system.

9.3.7.5 Instrumentation Application

Instrumentation for the SAS is primarily local, consisting of pressure, differential pressure and temperature indication and/or control. Pressure transmitters and pressure switches provide control room pressure indications and alarms. The system is maintained at constant pressure, with local pressure reduction provided as required.

Pressure-reducing valves are used, where required, for services requiring less pressure than exists in the respective receiver tanks.

9.3.8 Radioactive Drain Transfer System

9.3.8.1 Design Bases

This subsection describes the equipment and floor drain system which consists of collection fixtures and drainage piping from points of collection to sumps within the reactor, turbine and radwaste buildings. This subsection also discusses the sumps, sump pumps, sump coolers, piping, valves, instruments and controls used to transfer liquid wastes to the Radwaste Building (RW/B) collection tanks. This equipment is part of the Liquid Waste Management System (Subsection 11.2).

9.3.8.1.1 Safety Design Bases

(1) The Drain Transfer System (DTS) drains equipment and floor areas where required for structural loading reasons and to protect systems required for a safe shutdown.

(2) All potentially radioactive drains are piped directly to the radwaste system and shall not affect safety-related equipment operation. Divisional separation zones piping and radwaste tunnel penetrations will have check valves to preclude back flow and local isolation at the individual sumps.

(3) Containment and drywell penetrations shall be designed and fabricated in accordance with the ASME Code, Section III, Class 2. These valves close automatically when they receive a LOCA signal. Secondary Containment penetrations shall be in accordance with the ASME Code, Section III, Class 3.

(4) Effluent from the radioactive drains shall be treated and monitored prior to discharge to assure that there are no unacceptable discharges.

(5) The radioactive drain transfer collection piping shall be provided with the following features:

(a) These piping systems shall be non-nuclear safety class and quality Group D with the exception of the containment penetrations and piping within the drywell, which shall be Seismic Category I and quality Group B. Additional exceptions are the backflow check valves in the ECCS equipment room sumps, which shall be Seismic Category I and quality Group C.

(b) The floor drain piping system in each divisional area of the ECCS pump rooms and the Control Building shall be arranged with a separate piping system for each quadrant or zone. The piping shall be arranged so that flooding or backflow in one quadrant cannot adversely affect all of the other quadrants.

(c) The COL applicant will provide equipment and floor drain piping P&IDs for all parts of the radioactive drain transfer system. See Subsection 9.3.12.4 for COL license information requirements.

(d) There shall be no interconnection between any portion of the radioactive drain transfer system and any non-radioactive waste system which will permit transfer of radioactive material to the non-radioactive system. Effluent from non-radioactive systems shall be monitored prior to discharge to assure that there are no unacceptable discharges.

(e) Any valves that are relied upon to prevent backflow shall be inspectable and testable and designed to withstand SSE.

(f) Reactor Building (primary, secondary and divisional separation zones) HCW sumps shall be headered prior to transfer into the radwaste tunnel. LCW sumps shall be likewise headered.

(g) Control Building (RCW/RSW basement rooms) sumps shall be headered prior to transfer into the CB-radwaste tunnel.

(6) The Control Building water high high level sensors shall be safety-related (see Figure 11A.2-2, Sheet 36)

9.3.8.1.2 Power Generation Design Bases

(1) The DTS shall be designed to collect and remove waste liquids from their point of origin to the Radwaste System for further processing.

(2) The sump level switches shall serve as leakage monitors for equipment or systems served by each sump. Leakage detection is also discussed in Subsection 5.2.5.

(3) Open drainage lines from areas that are required to maintain an air pressure differential, but drain to a radioactive sump, are provided with a water seal.

(4) All drainage lines into each sump shall be turned down and terminated below the lowest fluid level to which the sump pump can draw.

9.3.8.2 System Description

The DTS P&IDs showing the sumps with their pumps, piping, instruments and controls are provided in Section 11.2. See Figures 11A.2-1 and 11A.2-2.

9.3.8.2.1 General Description

The DTS is designed to assure that waste liquids, valve and pump leakoffs and component drains and vents are directed to the proper area for processing. The process portion of the systems consists of sump pumps, sump coolers (if necessary) tanks, valves and instrumentation. Sumps are provided as shown in the arrangement drawings in Section 1.2.

The following ECCS loops are located in separate watertight areas:

(1) RHR A, RCIC

(2) RHR B and HPCF B

(3) RHR C and HPCF C

Each area contains all of the power-operated valves and associated instrumentation outside the containment for the respective ECCS loop. Therefore, a pipe break or major leak in one area could not flood any adjoining area and, consequently, would not render the loops inoperable. The consequences of internal flooding are discussed further in Subsection 3.4.1.

All drainage systems are essentially passive systems down to the sumps or yard pipe connections; that is, flow is by gravity with no valves, pumps, and the like in the lines such that failure could cause a system not to drain. All exposed drainage piping is seismically analyzed to remain intact following an SSE, and thus will drain the area as required (Subsection 3.4.1).

Unacceptable flooding consequences are precluded by the capacity of the DTS and the placement of safety-related equipment on raised pads or grating. Also, check valves in sump pump discharge lines prevent reverse flow from other sumps that have piping to the radwaste collection tank.

The design of the drain transfer system precludes release to the environs of radioactive liquid. Potentially radioactive systems (equipment, floor, and detergent drains) are routed directly to the Radwaste System, with no cross connections to uncontrolled (storm drain, sanitary and normal waste) systems. As a backup, however, all nonradioactive drain systems are monitored for radiation prior to release to the environs.

9.3.8.2.2 System Operation

Radioactive waste is directed into either one of two drainage systems, depending upon its source. Drainage from equipment goes to the Low Conductivity Waste (LCW) System. Drainage from the floors in the various compartments goes to the High Conductivity Waste (HCW) System. The terms “clean” and “dirty” radwaste are also used to denote LCW and HCW, respectively.

The floor drains are more apt to exhibit higher conductivity because they contain suspended solids and other not necessarily radioactive contamination.

(1) **Equipment Drains—**Controlled drains from equipment carrying radioactive or potentially radioactive liquids is collected in equipment drain (LCW) sumps in each building and is automatically discharged to the Low Conductivity Collection Tank in the Radwaste System. The sumps and pumps are sized to handle all equipment they serve.

(2) **Floor Drains—**Floor drains from each isolated area or building are collected in the lowest level of the area, and the waste is automatically transferred by means of sump pumps to the High Conductivity Collection Tank in the Radwaste System. As with the equipment drain sumps, the HCW sumps and pumps are sized to handle all anticipated normal or transient floor waste.

(3) **Provision of Spare Pumps—**All sumps which process radioactive wastes are supplied with two pumps each. Each pump is sized to handle the maximum anticipated flow into the sump. Thus, each sump has one operating pump and one pump on standby.

(4) **Leak Detection—**The Reactor Building and drywell sumps have instrumentation which permits detection of excessive leakage and provides for an alarm upon high leakage rates.

(5) **Sump Coolers—**The Reactor Building drywell equipment drain sumps each have provisions for measuring their sump liquid temperature and automatically recirculating the sump contents through a drain cooler to cool the sump contents if the temperature exceeds 60°C . In the event of a LOCA signal, all drywell sump pumps are automatically isolated, to preclude the possible uncontrolled release of primary coolant.

(6) **Detergent Drains—**The detergent drain sump collects laundry and shower drains. The detergent drains are transferred to the detergent drain tanks in the Radwaste System. These detergent wastes are kept separate from other wastes, since detergent wastes are processed in a separate process train in the Radwaste System.

9.3.8.2.3 Component Description

Drain System components are as follows:

(1) **Collection Piping—** In all area of potential radioactivity contamination, the collection system piping for the liquid system is of stainless steel for embedded and chemical drainage, and carbon steel for suspended drainage. Offsets in the piping are provided, where necessary, for radiation shielding. In general, the fabrication and installation of the piping provides for a uniform slope that causes gravity to flow to the appropriate sump. During construction, equipment drain piping is terminated not less than 5 cm above the finished floor or drain receiver at each location where the discharge from equipment is to be collected. The connections to the individual equipment are made after the equipment is installed in its proper location.

(2) **Collection Sumps** (potentially radioactive drains)—These sumps are provided with a well-fitting, but not gastight, steel plate access cover for convenient maintenance access, as well as to minimize airborne contamination.

(3) **Equipment Drains**—Equipment that may be pressurized during drainage, and that drains via direct or indirect drain connection to the floor drain system, is designed so that the equipment discharge flow does not exceed the gravity flow capacity of the drainage header at atmospheric pressure.

(4) **Floor Drains**—All floor drains are installed with rims flush with the low-point elevation of the finished floor. Floor drains in areas of potential radioactivity are welded directly to the collection piping and are provided with threaded, T-handle plugs of the same material. The T-handle plugs are used to seal the floor drains during hydrostatic testing of the drainage systems, system startup and during all required leakage rate testing. All drainage piping, except carbon steel and suspended stainless steel piping, is hydrostatically tested during system startup. It is also installed, as required, to preserve the integrity of the drainage systems. Floor drains in areas not restricted because of potential radioactivity are provided with caulked or threaded connections.

(5) **Cleanouts**—In collection system piping from areas of potential radioactivity, cleanouts are provided, when practicable, at the base of each vertical riser where the change of direction in horizontal runs is 90°, at offsets where the aggregate change is 135° or greater, and at maximum intervals of 15.2 m. Equipment hubs and floor drains are also used as cleanout points. Cleanouts are welded directly to the piping and located with their access covers flush with the finished floor or wall.

9.3.8.2.4 Safety Evaluation

In the event of a LOCA signal, all drywell sumps are automatically isolated to preclude the uncontrolled release of primary coolant outside the primary containment.

The accumulation of water in one Reactor Building divisional separation zone does not result in the accumulation of water in other divisional zones. Failure of the discharge check valves has been postulated. The failed open check valve will result in a momentary flow from the flooded zone into the adjacent zone of the common header. The adjacent zone sump pump will be started on increasing water level and sends the water into the common header. The third unaffected divisional zone is also available for safe shutdown operation.

Failure of the radwaste tunnel and sump drain header seal are discussed in Subsection 3.4.1. Such failures are expected to limit leakages failures with appropriate time for maintenance repair.

Failure of header piping outside the divisional zones and in the Reactor Building/Secondary Containment Corridor at –8,200 mm elevation is enveloped by Subsection 3.4.1 plant flooding analyses.

9.3.8.2.5 Tests and Inspections

Drywell and Reactor Building floor and equipment drain sumps are provided with the following instruments and controls:

(1) High and low level switches are provided on each sump pump to start and stop the sump pump automatically. A separate high-high level switch set at a higher level starts the second pump and simultaneously actuates an alarm in the main control room.

(2) Leak detection is effected by monitoring the frequency and duration of pump runs.

9.3.9 Hydrogen Water Chemistry System

9.3.9.1 Design Bases

9.3.9.1.1 Safety Design Basis

The Hydrogen Water Chemistry (HWC) System is non-nuclear, non-safety-related and is required to be safe and reliable, consistent with the requirement of using hydrogen gas. The hydrogen piping in the Turbine Building shall be designed in accordance with the guidance Regulatory Guide 1.29 “Seismic Design Classifications”, Section C.2 to comply with modified BTP CMEB 9.5-1, Part C.5.d(5).

9.3.9.1.2 Power Generation Design Basis

BWR reactor coolant is demineralized water, typically containing 100 to 200 parts per billion (ppb) dissolved oxygen from the radiolytic decomposition of water. To mitigate the potential for intergranular stress corrosion cracking (IGSCC) of sensitized austenitic stainless steels, the dissolved oxygen in the reactor water can be reduced to less than 20 ppb by the addition of hydrogen to the feedwater. The amount of hydrogen required is in the range of 1.0 to 1.5 ppm. The exact amount required depends on many factors, including incore recirculation rates. The amount required will be determined by tests performed during the initial operation of the plant.

The concentration of hydrogen and oxygen in the main steamline, and eventually in the main condenser, is altered in this process. This leaves an excess of hydrogen in the main condenser that would not have equivalent oxygen to combine with in the Offgas System. To maintain the Offgas System near its normal operating characteristics, a flow rate of oxygen equal to approximately one-half the injected hydrogen flow rate is injected in the Offgas System upstream of the recombiner.

The HWC System utilizes the guidelines given in EPRI report NP-5283-SR-A, "Guidelines for Permanent BWR Hydrogen Water Chemistry Installation" and EPRI report NP-4947-SR, "BWR Hydrogen Water Chemistry Guidelines; 1987 Revision," October 1988. Specifically, the HWC System piping and components will be located to reduce risk from their failures. Equipment and controls used to mitigate the consequences of a hydrogen fire/explosion will be designed to be accessible and remain functional during the postulated post accident condition. All threaded joints in the hydrogen distribution piping will be back welded. Additionally, design features and/or administrative controls shall be provided to ensure that the hydrogen supply is isolated when normal building ventilation is lost.

9.3.9.2 System Description

The HWC System (Figure 9.3-8) is composed of hydrogen and oxygen supply systems, systems to inject hydrogen into the feedwater and oxygen into the offgas and subsystems to monitor the effectiveness of the HWC System. These systems monitor the oxygen levels in the Offgas System and the reactor water.

The hydrogen supply system will be site dependent. Hydrogen can be supplied either as a high-pressure gas or as a cryogenic liquid. Hydrogen and oxygen can also be generated on site by the dissociation of water by electrolysis. The HWC hydrogen supply system may be integrated with the generator hydrogen supply system to save the cost of having separate gas storage facilities for both systems. However, bulk hydrogen storage will be located outside but near the Turbine Building as stated in Subsection 10.2.2.2.

The oxygen supply system will be site dependent. A single oxygen supply system could be provided to meet the requirements of the HWC System and the condensate Oxygen Injection System described in Subsection 9.3.10.

9.3.9.3 Safety Evaluation

The operation of the HWC System is not necessary to assure:

(1) The integrity of the reactor coolant pressure boundary.

(2) The capability to shut down the reactor.

(3) The capability to prevent or mitigate the consequences of events which could result in potential offsite exposures.

The HWC System is used, along with other measures, to reduce the likelihood of corrosion failures which would adversely affect plant availability. The means of storing and handling hydrogen shall utilize the guidelines in EPRI NP-5283-SR-A, "Guidelines for Permanent BWR Hydrogen Water Chemistry Installations".

9.3.9.4 Inspection and Testing Requirements

The HWC System is proved operable during the initial operation of the plant. During a refueling or maintenance outage, hydrogen injection is not required. System maintenance or testing can be performed during such periods.

9.3.9.5 Instrumentation and Controls

Automatic control features in the HWC System minimize the need for operator attention and improve performance. These features include:

(1) Automatic variation of hydrogen and oxygen flow rates with reactor power level.

(2) Automatic oxygen injection rate change delay. This function is also augmented as a function of reactor power level.

(3) Automatic shutdown on several alarms.

(4) Isolation on system power loss, operator restart.

The recommended trips of the oxygen and hydrogen injection systems include:

(1) Reactor scram

(2) Low or high residual oxygen in the offgas

(3) High area hydrogen concentration

(4) Low oxygen injection system supply pressure

(5) High hydrogen flow

The instrumentation provided includes:

(1) Flow monitors for measurement of hydrogen and oxygen flow rates.

(2) Hydrogen area monitor sensors to detect hydrogen to the atmosphere.

(3) Pressure gauges for measurement of hydrogen and oxygen supply pressures and instrument air pressure.

(4) An oxygen analyzer for measuring the percent oxygen leaving the offgas recombiner.

(5) Sensors for measuring dissolved oxygen content in reactor water.

9.3.10 Oxygen Injection System

9.3.10.1 Design Bases

The Oxygen Injection System is designed to add sufficient oxygen to the Condensate System to suppress corrosion and corrosion product release in the condensate and feedwater systems. Experience has shown that the preferred feedwater oxygen concentration is 20 to 50 ppb. During shutdown and startup operation, the feedwater oxygen concentration is usually much above the 20 to 50 ppb range. However, during power operation, deaeration in the main condenser may reduce the condensate oxygen concentration below 20 ppb, thus requiring that some oxygen be added. The amount required is up to approximately 0.15 m^3/h.

9.3.10.2 System Description

The oxygen supply consists of high-pressure gas cylinders. The Oxygen Injection System shall use the guidelines for gaseous oxygen injection systems in EPRI report NP`5283-SR-A, "Guidelines for Permanent Hydrogen Water Chemistry Installations—1987 Revision," September 1987. A condensate oxygen injection module is provided with pressure regulators and associated piping, valves, and controls to depressurize the gaseous oxygen and route it to the condensate injection modules. There are check valves and isolation valves between the condensate injection modules and the condensate lines upstream of the filters.

The flow regulating valves in this system are operated from the main control room. The oxygen concentration in the condensate/feedwater system is monitored by analyzers in the sampling system (Subsection 9.3.2). An operator will make changes in the oxygen injection rate in response to changes in the condensate/feedwater concentration. An automatic control system is not required because instantaneous changes in oxygen injection rate are not required.

9.3.10.3 Safety Evaluation

The Oxygen Injection System is not required to assure any of the following conditions:

(1) Integrity of the reactor coolant pressure boundary.

(2) Capability to shut down the reactor and maintain it in a safe shutdown condition.

(3) Ability to prevent or mitigate the consequences of events which could result in potential offsite exposures.

Consequently, the Oxygen Injection System itself is not safety-related. The high-pressure oxygen storage bottles are located in an area in which large amounts of

burnable materials are not present. Usual safe practices for handling high-pressure gases are followed.

9.3.10.4 Tests and Inspections

The Oxygen Injection System is proved operable by its use during normal operation. The system valves may be tested to ensure operability from the main control room.

9.3.10.5 Instrumentation Application

The oxygen storage bottles have pressure gauges which will indicate to the operators when a new bottle is required. A flow element will indicate the oxygen gas flow rate at all times. The gas flow regulating valves will have position indication in the main control room.

The oxygen monitors are discussed in Subsection 9.3.2.

9.3.11 Zinc Injection System

9.3.11.1 Design Bases

Provisions are made to permit installation of a system for adding a zinc solution to the feedwater. Piping connections (Figure 10.4-6) for a bypass loop around the feedwater pumps and space (Figure 1.2-25) for the zinc addition equipment are provided. If experience shows it to be necessary, a zinc injection system may be added later in plant life. The amount of zinc in the reactor water will be less than 10 ppb during normal operation.

9.3.11.2 Safety Evaluation

The Zinc Injection System is not necessary to ensure:

(1) The integrity of the reactor coolant pressure boundary.

(2) The capability to shut down the reactor.

(3) The capability to prevent or mitigate the consequences of events which could result in potential offsite exposures.

9.3.11.3 Test and Inspections

The Zinc Injection System, if proved necessary, will be installed at the provided connection point on Figure 10.4-6. Zinc injection would not be performed when the plant is in cold shutdown. During these periods, the system could have maintenance or testing performed.

9.3.11.4 Instrumentation

Instrumentation would be provided so that the injection of zinc solution would be stopped automatically if feedwater flow stops. The zinc injection rate would be manually adjusted based on zinc concentration data in the reactor water.

9.3.12 COL License Information

9.3.12.1 Not Used

9.3.12.2 Not Used

9.3.12.3 Not Used

9.3.12.4 Radioactive Drain Transfer System

The COL applicant shall provide equipment and floor drain P&IDs.

Table 9.3-1 Standby Liquid Control System Operating Pressure/Temperature Conditions

	Test Modes*							
	Circulation Test		Injection Test†		Standby Mode*		Operating Mode*	
Piping	Pressure (MPaG)‡	Temperature (°C)	Pressure (MPaG)‡	Temperature (°C)	Pressure (MPaG)‡	Temperature (°C)	Pressure (MPaG)‡	Temperature (°C)
Pump Suction Inlet to Tank Shutoff Valve	Test Tank Static Head[f]	21/38**	Test Tank Static Head[f]	21/38**	Makeup Water Pressure	21/38**	Storage Tank Static Head 0.392 - 0.833	21/43**
Pump Discharge to Injection Valve Inlet	0/8.41	21/38	0.392-0.883 Plus Reactor Static Head	21/38	Makeup Water Pressure	21/38	(4-9 Plus Reactor Static Head) to 8.41	21/43
Injection Valve Outlet to but not including Outboard Drywell Check Valve	Reactor Static Head to 8.62††	21/38	< 0.392-0.883 Plus Reactor Static Head	21/38	Reactor Static Head to 8.62††	21/38	(<0.392-0.883 Plus Reactor Static Head) to 8.62	21/43
Outboard Drywell Check Valve to the Reactor	Reactor Static Head to 8.62	21/302‡‡	Reactor Static Head†	52†	Reactor Static Head to 8.62††	21/302‡‡	Reactor Static Head to 8.62††	21/302‡‡

* The pump flow rate will be zero (pump not operating) during the standby mode and at rated (189L/min/pump) during the test and operating modes.

† Reactor to be at 0 MPaG and 52°C before changing from the standby mode to the injection test mode.

‡ Pressures tabulated represent pressure at the points identified below. To obtain pressure at intermediate points in the system, the pressure tabulated must be adjusted for elevation differences and pressure drop between such intermediate points and the pressure points identified below:

Piping	Pressure Point
Pump Suction	Pump Suction Flange Inlet
Pump discharge to Injection Valve Inlet	Pump Discharge Flange Outlet
Injection Valve Outlet to, but not including, Drywell Check Valve	Injection Valve Outlet
Outboard Drywell Check Valve to the Reactor	Reactor Sparger Outlet

f Pump suction piping will be subject to condensate water supply pressure during flushing and filling of the piping and during any testing where suction is taken directly from the condensate water supply line rather than the test tank.

** During chemical mixing, the liquid in the storage tank will be at a temperature of 66°C maximum.

†† Maximum reactor operating pressure is 8.62 MPaG at reactor standby liquid control sparger outlet.

‡‡ 302°C represents maximum sustained operating temperature.

Table 9.3-2 Water Quality Instrumentation

Field System ID	Instrument Sensor	Sensor Location *	Indicator Location	Recorder Location	Instrument Range	Instrument Accuracy	Recommended Alarm Setpoints	
							High	High-High
Condensate—hotwell outlet	Conductivity	Each process line	Local panel	Control room	0 to 10 NL 1μ S/cm MS	±1% FS	0.5μ S/cm	2μ S/cm
Condensate—condensate pump discharge	Conductivity	Process line	Local panel	Control room	0 to 10 NL 1μ S/cm MS	±1% FS	0.2μ S/cm	1μ S/cm
	Conductivity	Sample line	Condensate—sample station panel	Sample station panel	0 to 10 NL 1μ S/cm MS	±1% FS	0.2μ S/cm	—
	Conductivity	Process line (seawater and brackish water cooled plants)	Local panel	Control room	0 to 100 NL 10μ S/cm MS	±1% FS	10μ S/cm	—
Treated condensate individual condensate demineralizer unit outlet	Conductivity	Each process line (seawater and brackish water cooled plants)	Local panel	Control room	0 to 1 NL 0.1μ S/cm MS	±1% FS	0.1μ S/cm	—
	Conductivity	Each sample line	Condensate sample station panel	Control room	0 to 1 NL 0.1μ S/cm MS	±1% FS	0.1μ S/cm	—
Treated condensate combined treatment outlet	Conductivity	Process line	Local panel	Control room	0 to 1 NL 0.1μ S/cm MS	±1% FS	0.1μ S/cm	0.2μ S/cm

FS = Full Scale Range MS = Midscale NL = Nonlinear

Table 9.3-2 Water Quality Instrumentation (Continued)

Field System ID	Instrument Sensor	Sensor Location *	Indicator Location	Recorder Location	Instrument Range	Instrument Accuracy	Recommended Alarm Setpoints	
							High	High-High
	Conductivity	Sample line	Condensate sample station panel	Sample station panel	0 to 1 NL 0.1μ S/cm MS	±1% FS	0.1 μ S/cm	—
Treated condensate combined treatment unit outlet	Oxygen analyzer	Sample line†	Condensate sample station panel	Control room	0 to 100 ppb‡ Oxygen	±5% FS	—	—
Feedwater	Oxygen analyzer	Sample line	Condensate sample station	Control room	0 to 250 ppb Oxygen	±5% FS	200 ppb O_2	—
	Corrosion products monitor	Sample line	Feedwater sample station	Control room	0 to 1 ppm[f]	—	—	—
	Conductivity	Sample line	Condensate sample station or feedwater sample station	Control room	0 to 1 NL 0.1μ S/cm MS	±1% FS	0.1 μ S/cm	—
Control rod drive water	Oxygen analyzer	Sample line	Reactor sample station panel	Control room	0 to 1000 ppb Oxygen	±5% FS	200 ppb O_2	—
	Conductivity	Sample line	Reactor sample station panel	Control room	0 to 1 NL 0.1μ S/cm MS	±1% FS	0.2 μ S/cm	—
Reactor water cleanup system inlet (high temp)[f]	Conductivity	Sample line	Reactor sample station panel	Control room	0 to 10 NL 0.1μ S/cm MS	±1% FS	0.7 μ S/cm	3.5 μ S/cm
	Oxygen analyzer	Sample line	Reactor sample station panel	Control room	0 to 10 ppm Oxygen	±5% FS	—	—

FS = Full Scale Range MS = Midscale NL = Nonlinear

Table 9.3-2 Water Quality Instrumentation (Continued)

Field System ID	Instrument Sensor	Sensor Location *	Indicator Location	Recorder Location	Instrument Range	Instrument Accuracy	Recommended Alarm Setpoints	
							High	High-High
Reactor Water Cleanup System inlet (low temp)**	Conductivity	Sample line	Reactor sample station panel	Control room	0 to 10 NL 1μ S/cm MS	±1% FS	0.7μ S/cm	3.5μ S/cm
Reactor Water Cleanup System inlet	Oxygen analyzer	Sample line (redundant connection)	—	—	—	—	—	—
Treated reactor water individual demineralizer outlet	Conductivity	Sample line	Reactor sample station panel	Control room	0 to 1 NL 0.1μ S/cm MS	±1% FS	0.1μ S/cm	0.2μ S/cm
Fuel pool water cleanup system inlet	Conductivity	Process line or sample line	Local panel	Local panel and control room alarm	0 to 10 NL 1μ S/cm MS	±1% FS	2μ S/cm	3μ S/cm
Fuel pool water individual demineralizer outlet	Conductivity	Process line or sample line	Local panel	Local panel and control room alarm	0 to 1 NL 0.1μ S/cm MS	±1% FS	0.1μ S/cm	0.2μ S/cm
RHR System pressure suppression pool water	Conductivity	Process line or sample line	Local panel	Control room	0 to 10 NL 1μ S/cm MS	±1% FS	3μ S/cm	10μ S/cm
Radwaste System-return to plant systems	Conductivity	Process line or sample line	Local panel or radwaste control room	Radwaste control room	0 to 10 NL 1μ S/cm MS	±1% FS	1.0μ S/cm	—
Auxiliary Boiler System	Conductivity	Process or sample line	Local panel	Control room	0 to 1 NL 0.1μ S/cm MS	±1% FS	0.1μ S/cm	0.2μ S/cm

FS = Full Scale Range MS = Midscale NL = Nonlinear

Table 9.3-2 Water Quality Instrumentation (Continued)

Field System ID	Instrument Sensor	Sensor Location *	Indicator Location	Recorder Location	Instrument Range	Instrument Accuracy	Recommended Alarm Setpoints	
							High	High-High
RHR Heat Exchanger Outlet (3)	Conductivity	Sample Line	Local Panel	Main control Room	0 to 10 NL 1μ S/cm MS	±1% FS	3μ S/cm	10μ S/cm
Condensate Transfer Pump Outlet	Conductivity	Sample Line	Condensate Sample Station Panel	Sample Station Panel	0 to 1 NL 0.1μ S/cm MS	±1% FS	0.1μ S/cm	—
Suppression Pool Cleanup Outlet	Conductivity	Sample Line	Local Panel	Main Control Room	0 to 1 NL 0.1μ S/cm MS	±1% FS	0.1μ S/cm	0.2μ S/cm
LCW Process Line	Conductivity	Process Line	Local Panel	Radwaste Control Room	0 to 20 NL 0.1μ S/cm MS	±1% FS	—	—
HCW Process Line	Conductivity	Process Line	Local Panel	Radwaste Control Room	0 to 200 NL 0.1μ S/cm MS	±1% FS	—	—
Additional sample lines are in the footnote †								

FS = Full Scale Range MS = Midscale NL = Nonlinear

* The following sampling lines are provided which do not have any instruments, grab sampling only: main stream, high pressure drains, gland steam evaporator drain, TCW heat exchanger outlet, standby liquid control tank, HECW (3), HNCW, LCW sump, HCW sump, HWH, condensate filter outlet (4), condensate demineralizer outlet (6), RCW (12) and all tanks and major process streams in the liquid radwaste system. Sampling for the Offgas System is discussed in Section 11.3.

† Sample location downstream of oxygen injection point.

‡ ppb = Parts per billion

ƒ ppm = Parts per million

** One of the two CUW sampling lines (high temp.) takes the sample before the CUW heat exchangers, and the other (low temp.) takes the sample after the CUW heat exchangers.

Table 9.3-3 Service Air Consumption During Normal Plant Operation

User	Use*	Consumption, Standard m^3/min
Standby Liquid Control Tank	Mixing	2.3
CUW Filter/Demineralizer	Backwashing	3.5
FPC Filter/Demineralizer	Backwashing	4.4
Condensate Filter	Backwashing	12.0
Condensate Demineralizer	Mixing	7.5
Offgas Exhaust Gas Ejector	Driving Force	2.5
LCW Filter	Backwashing	1.7
LCW Demineralizer	Transfer	2.0
HCW Demineralizer	Transfer	2.0
Instrument Air System	Backup	7.7

* All of these operations will not occur at the same time

Table 9.3-4 Instrument Air Consumption During Normal Plant Operation* (Response to Question 430.215)

Building	Users	Consumption, Standard m^3/min
Reactor	Instrumentation	0.10
	Control valves	0.37
	Air-operated solenoid valves	0.09
Turbine	Instrumentation	1.39
	Control valves	2.75
	Air-operated solenoid valves	0.16
Radwaste	Instrumentation	0.05
	Control valves	0.36
	Air-operated solenoid valves	0.08
Total		5.35

* These uses are continuous.

The following figures are located in Chapter 21:

Figure 9.3-1 Standby Liquid Control System P&ID

Figure 9.3-1a Standby Liquid Control System PFD

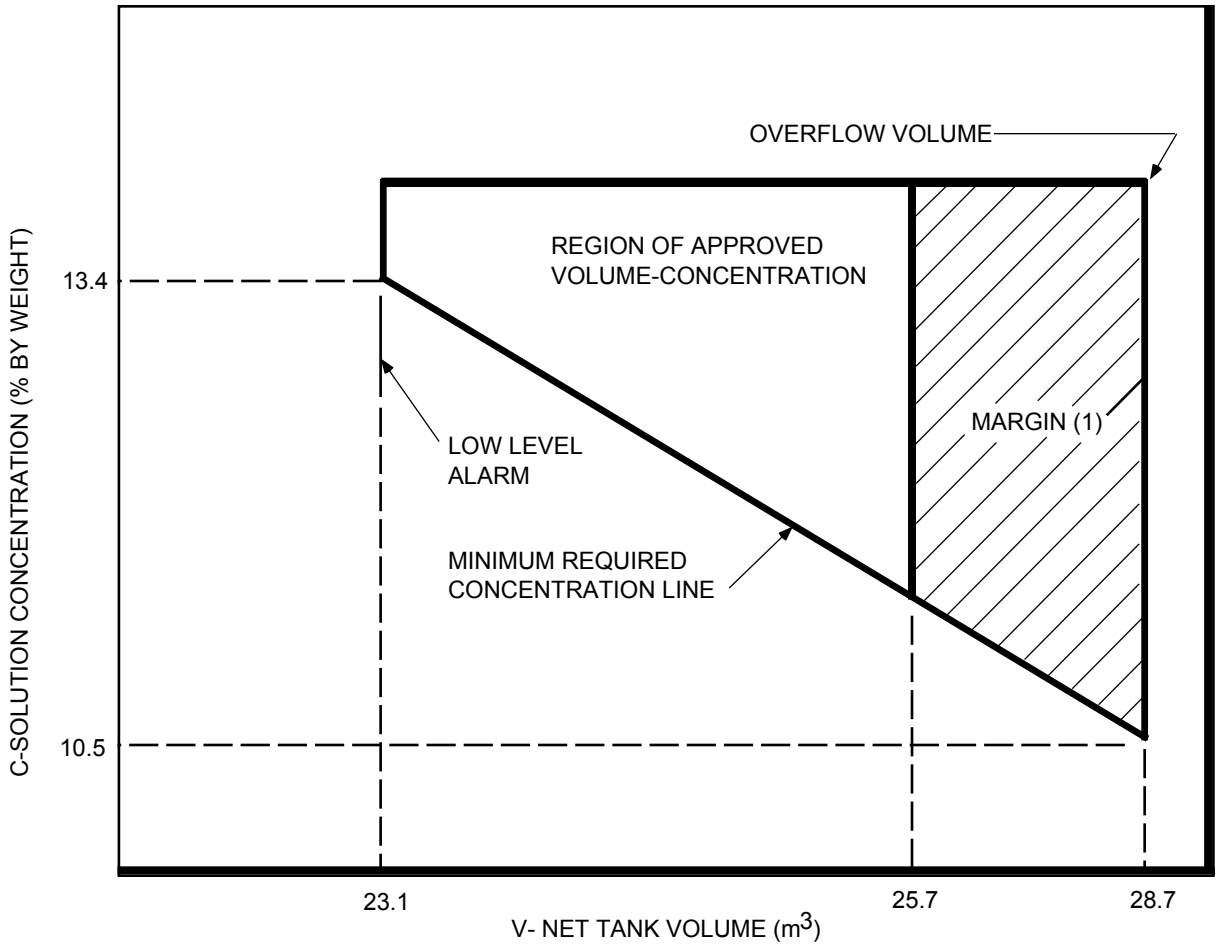

(1) RECOMMENDED 36 cm MARGIN BETWEEN
MAXIMUM OPERATING AND OVERFLOW LEVELS

Figure 9.3-2 Sodium Pentaborate Volume Concentration Requirements

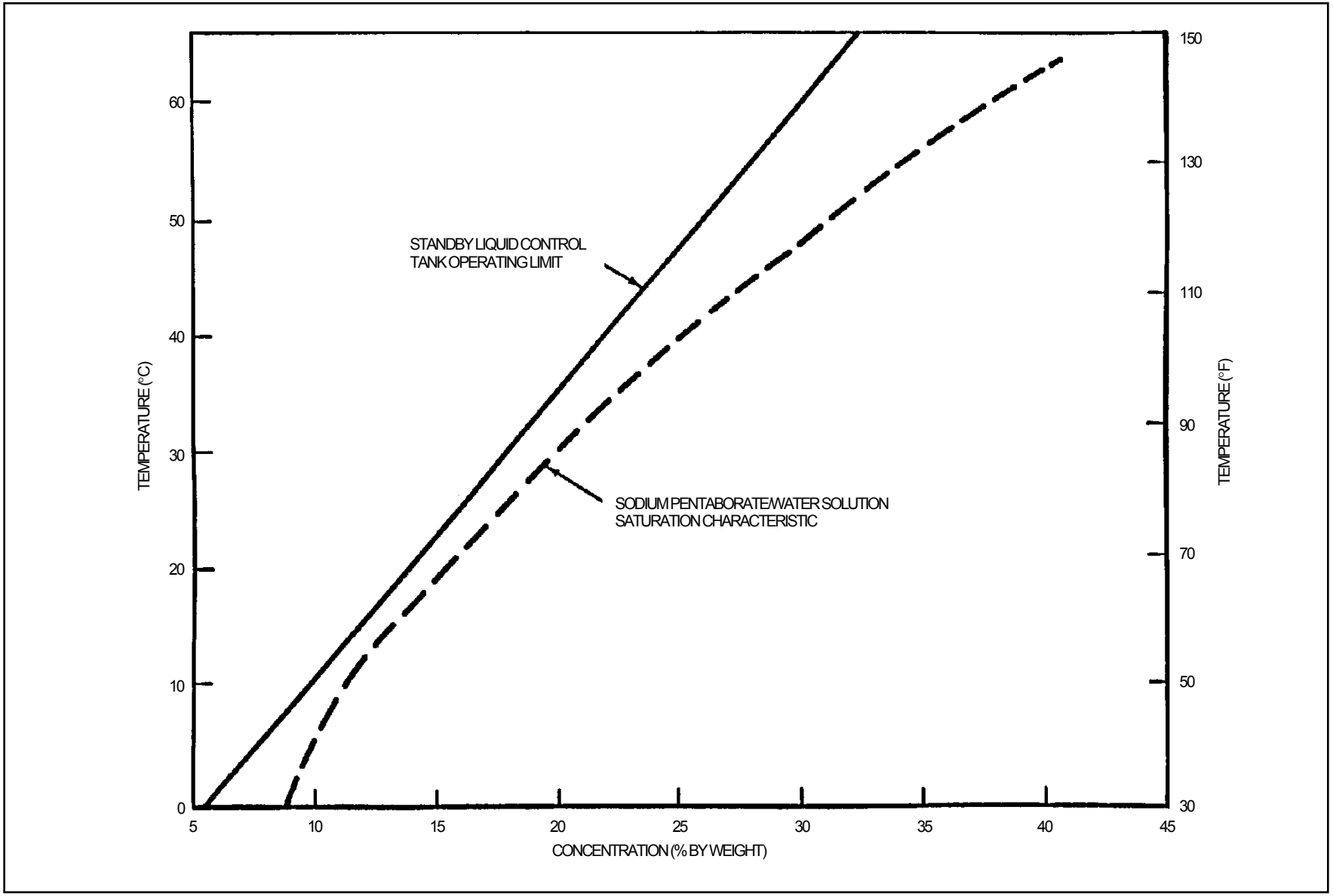

Figure 9.3-3 Saturation Temperature of Sodium Pentaborate Solution

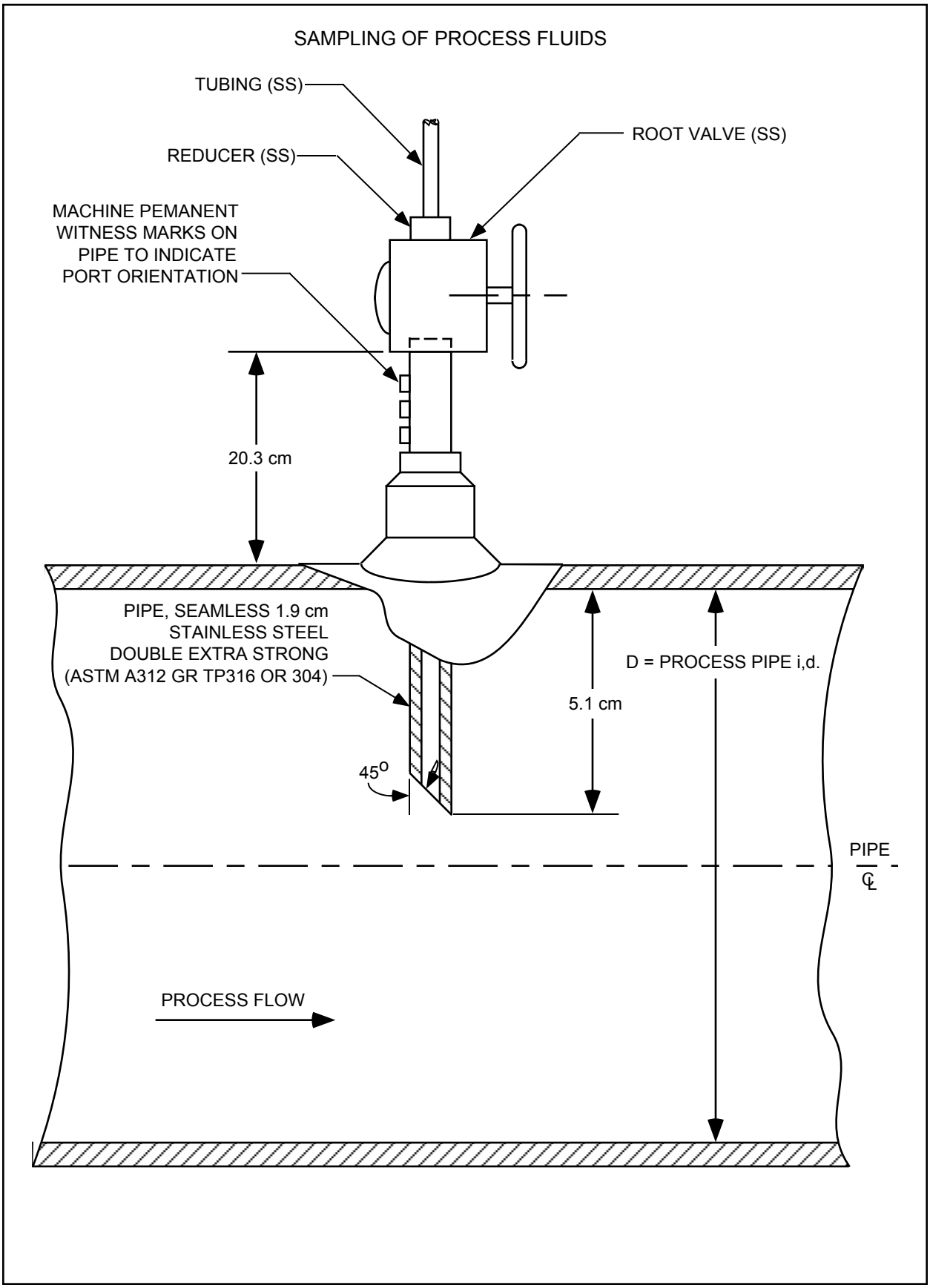

Figure 9.3-4 Sample Probe

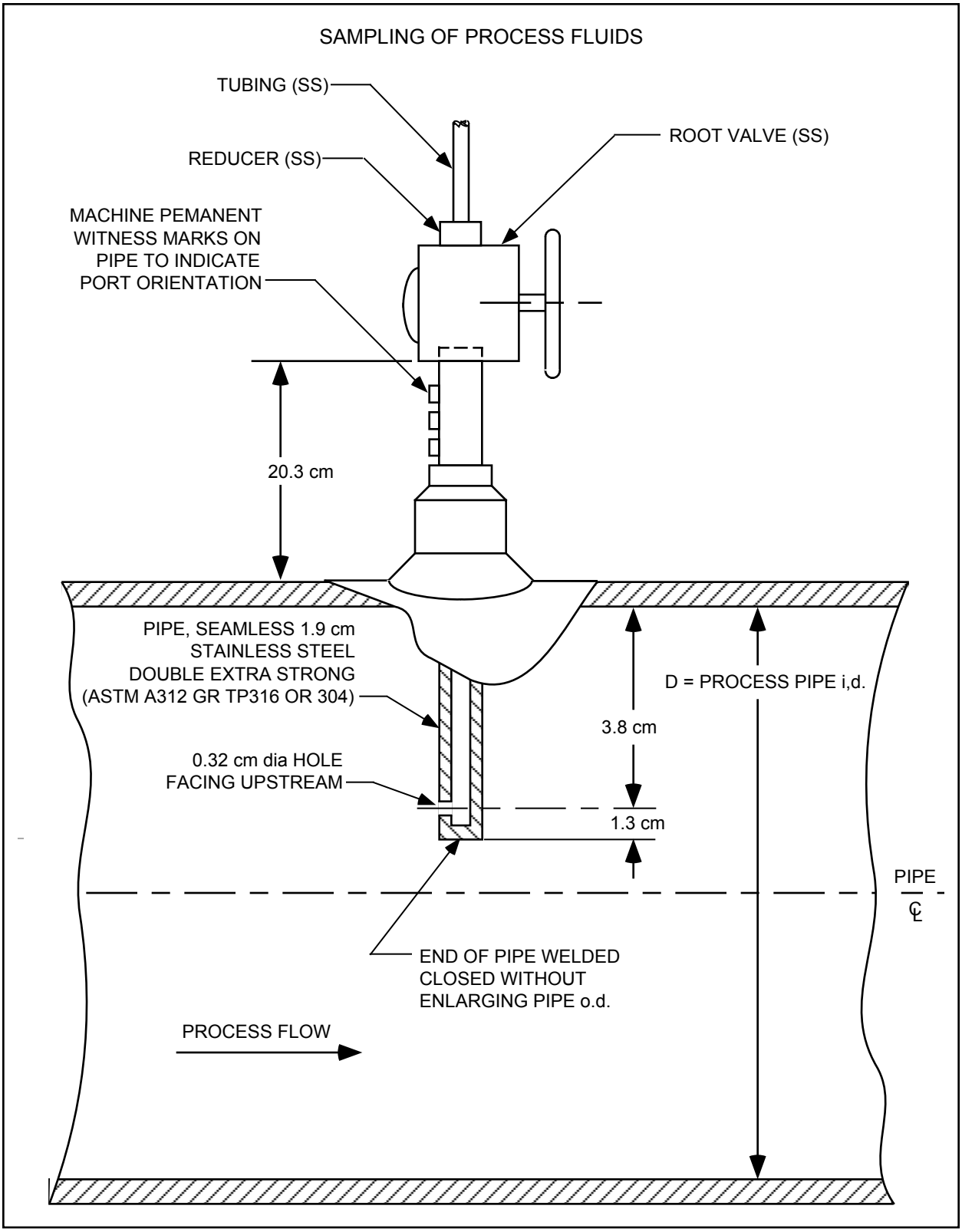

Figure 9.3-5 Sample Probe

The following figures are located in Chapter 21:

Figure 9.3-6 Instrument Air System P&ID (Sheets 1–2)

Figure 9.3-7 Service Air System P&ID (Sheets 1–2)

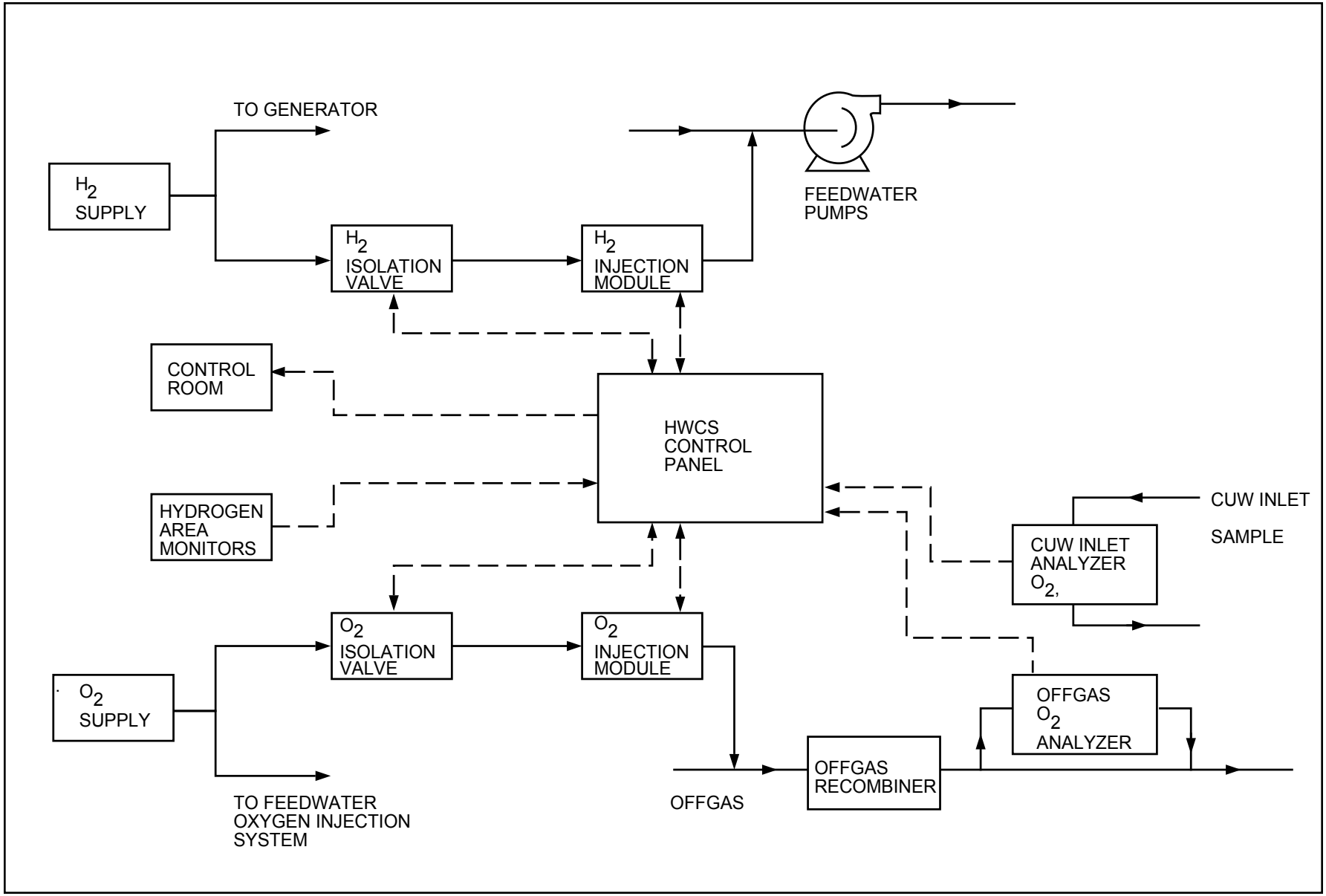

Figure 9.3-8 Hydrogen Water Chemistry System

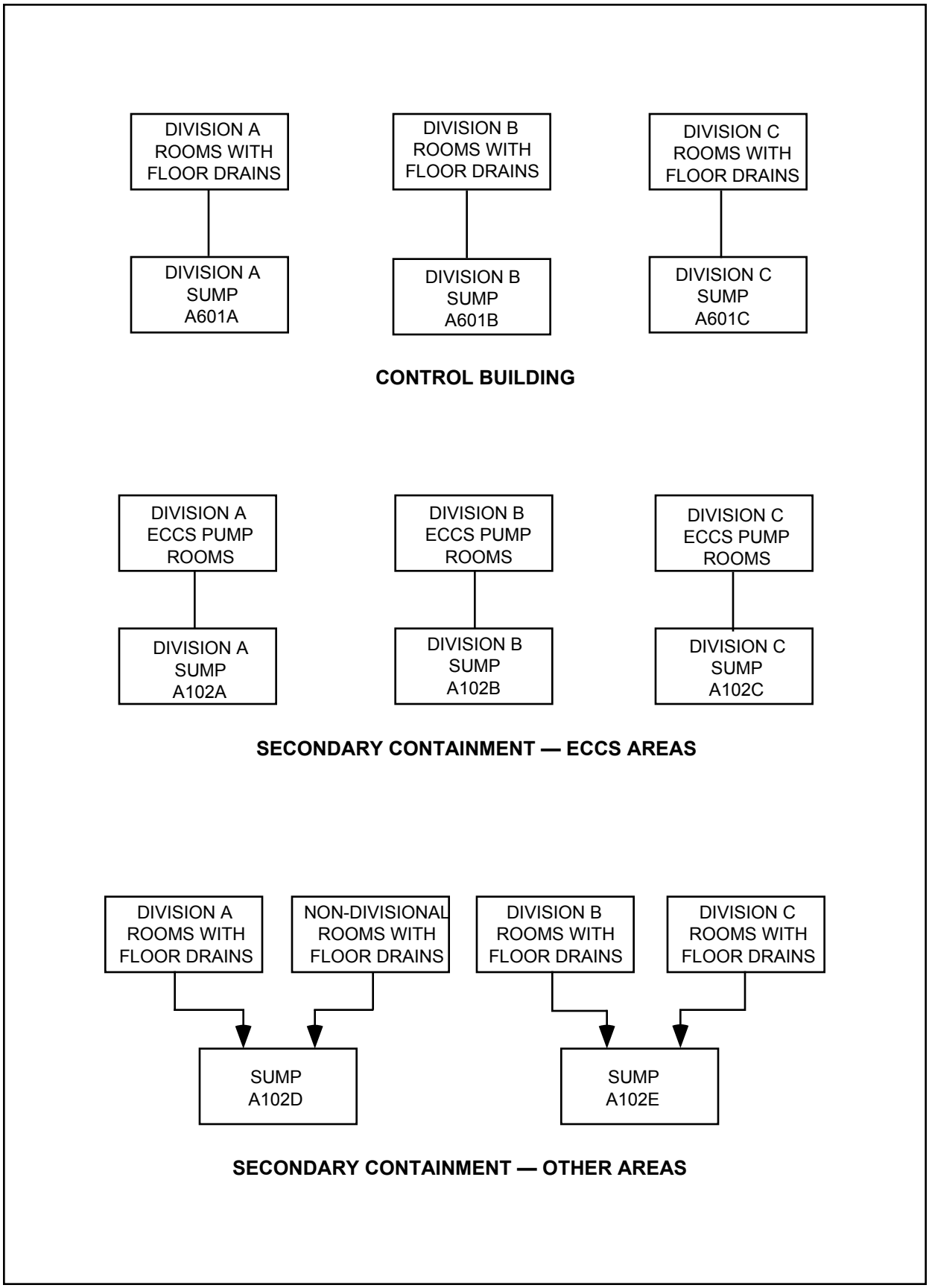

Figure 9.3-9 Divisional Radioactive Floor Drains

9.4 Air Conditioning, Heating, Cooling and Ventilating Systems

9.4.1 Control Building HVAC

The Control Building (C/B) Heating, Ventilating and Air-Conditioning (HVAC) System is divided into two separate systems: (1) an HVAC System for the main control area envelope within two floors, and (2) an HVAC System for safety-related electrical and RCW heat exchange equipment.

9.4.1.1 Control Room Habitability Area HVAC

9.4.1.1.1 Design Basis

(1) The control room habitability area (CRHA) HVAC System is designed with sufficient redundancy to ensure operation under emergency conditions assuming the single failure of any one active component. Independence is provided between Class 1E divisions and also between Class 1E divisions and non-class 1E equipment.

(2) Provisions are made in the system to detect and limit the introduction of airborne radioactive material in the main control area envelope (MCAE).

(3) Provisions are made in the system to detect and remove smoke and radioactive material from the MCAE.

(4) The control room habitability area HVAC System is designed to provide a controlled temperature environment to ensure the continued operation of safety-related equipment under accident conditions.

(5) The control room habitability area HVAC System and components are located in the Seismic Category I Control Building, a structure that is tornado-missile, and flood protected.

(6) Tornado missile barriers and tornado dampers are provided at each intake and exhaust structure.

(7) Protection from exterior smoke, toxic chemical and chlorine releases are discussed in Section 6.4.

9.4.1.1.2 Power Generation Design Basis

(1) The control room habitability area HVAC System is designed to provide an environment with controlled temperature and humidity to ensure both the comfort and safety of the operators. The range of design conditions for the control room environment are 21°C to 26°C and 10% to 60% relative humidity.

(2) The system is designed to permit periodic inspection of the principal system components.

(3) The outside design conditions for the control room habitability area HVAC System are 46°C during the summer and –40°C during the winter.

9.4.1.1.3 System Description

The CRHA HVAC System consists of redundant divisions. Each division consists of an air conditioning unit (ACU) with two supply fans, two exhaust fans, and an emergency filtration unit with two circulating fans. The main control area envelope is heated, cooled and pressurized with filtered outdoor air mixed with recirculated air for ventilation and pressurization purposes. Under normal conditions, sufficient air is supplied to pressurize the main control area envelope and the exfiltrate pressurizes the remainder of the Control Building.

The control room habitability area ACU consists of two independent divisions, each with a medium efficiency bag filter, an electric heating coil, chilled water cooling coil, and humidifier. Two 100% capacity fans draw air from the instrument panel areas, corridors, main control room, computer room, office areas, and the switch and tag room. Modulating dampers in the exhaust duct to the exhaust fans are controlled by a pressure controller to maintain the required 3.2 mm of water gauge positive pressure with respect to the atmosphere. The controller is located in the instrument panel area of the main control room. Normally one air conditioning unit, one supply fan and one exhaust fan are in operation.

Redundant emergency air filtration divisions each consist of an electric heating coil, a prefilter, HEPA filter, charcoal adsorber, a HEPA filter, and two 100% capacity circulating fans treat mixed outdoor and return air before discharging it into the main control area envelope. The charcoal adsorber will be 100 mm deep as a minimum. The emergency filtration unit supply fans are normally on standby for use only during high radiation conditions. A Process Radiation Monitoring System monitors two CRHA air intakes for radiation. The radiation monitors allow the control room operator to select manually one of the air intakes which are 50m apart. On receipt of a high radiation signal from the radiation monitors, only the corresponding emergency filtration unit of the operating division starts. The makeup air for pressurization can be treated by the HEPA and charcoal adsorbing system before distribution in the main control area envelope.

The control room habitability area HVAC P&ID is shown in Figure 9.4-1. Flow rates are given in Table 9.4-3, and the system component descriptions are given in Table 9.4-4.

Smoke detectors in the main control area envelope actuate an alarm on indication of smoke so the operators can place the system in the smoke removal mode manually. Air

ducts and air intakes are sized for 100% outdoor airflow. Dual smoke detectors in each CRHA HVAC system air intake detect and alarm on smoke originating outside the air intake. The CRHA HVAC system automatically isolates and is placed in full recirculation mode.

Fire dampers with fusible links in the HVAC ductwork will close under air flow conditions after fusible link melts.

9.4.1.1.4 Safety Evaluation

The control room habitability area HVAC System is designed to maintain a habitable environment and to ensure the operability of components in the control room. All CRHA HVAC equipment and surrounding structures are of Seismic Category I design and operable during loss of the offsite power supply.

The ductwork which serves these safety functions is termed ESF ductwork, and is of Seismic Category I design. ESF ducting is high-pressure safety grade ductwork designed to withstand the maximum positive and/or negative pressure to which it can be subjected under normal or abnormal conditions. Galvanized steel (ASTM A526 or ASTM A527) is used for outdoor air intake and exhaust ducts. All other ducts are welded black steel ASTM A570, Grade A or Grade D. Ductwork and hangers are Seismic Category I. Bolted flange and welded joints are qualified per ERDA 76-21. Divisions B and C equipment and ducts are separated except the common supply and common exhaust ducts serving the main control area envelope. Each emergency filtration division will utilize all welded construction for their charcoal trays and charcoal tray screen to preclude the possible loss of charcoal from absorber cells per IE Bulletin 80-03.

Redundant and independent components are provided where necessary to ensure that a single failure will not preclude adequate main control area envelope ventilation.

A four channel radiation monitoring system is provided to detect high radiation in the outside air intake ducts. A radiation monitor is provided in the control room to monitor control room area radiation levels. These monitors alarm in the control room upon detection of high radiation conditions. Isolation of the normal outdoor air intake serving the emergency habitability area HVAC system control room and initiation of outdoor air intake and the operating division emergency filtration unit and fan are accomplished by the following signals:

(1) High radiation inside the air intake duct

(2) Manual isolation

Under normal conditions, sufficient air is supplied to pressurize the main control area envelope and exfiltrate to pressurize the remaining areas of the Control Building.

The safety-related isolation valves at the outside air intakes are protected from becoming inoperable due to freezing, icing, or other environmental conditions.

Upon detection of smoke in the CRHA, the operating division of the HVAC System is put into smoke removal mode by the main control room operators. For smoke removal, both exhaust fans are started at high speed in conjunction with a supply fan, the recirculation damper is closed. Either division of the CRHA HVAC System can be used as a smoke removal system.

9.4.1.1.5 Inspection and Testing Requirements

Provisions are made for periodic tests of the emergency filtration unit fans and filters. These tests include measurement of differential pressure across the filter and of filter efficiency. Connections for testing, such as injection, sampling and monitoring, are properly located so that test results are indicative of performance.

The high-efficiency particulate air (HEPA) filters of the CRHA HVAC System shall be tested periodically with dioctyl phthalate smoke (DOP). The charcoal filters will be periodically tested with an acceptable gas for bypasses. Removal efficiency shall be at least 99% for all forms of iodine (elemental, organic, particulate and HI, hydrogen iodide in the influent system).

Each emergency filtration division duct work outside MCAE shall be periodically tested for unfiltered inleakage in accordance with ASME N510.

Each emergency filtration division shall be periodically inspected for open maintenance access doors or deteriorated seals that could lead to charcoal filter bypass.

The balance of the system is proven operable by its use during normal plant operation. Portions of the system normally closed to flow can be tested to ensure operability and integrity of the system.

9.4.1.1.6 Instrumentation Application

One of two air conditioning unit supply fans is started manually.

A high radiation signal automatically starts the emergency air filtration fan, closes the normal CRHA HVAC System air inlet dampers and closes the exhaust air dampers and stops the exhaust fan.

A temperature indicating controller senses the temperature of the air leaving the emergency filtration system. The controller then modulates an electric heating coil to maintain the leaving air temperature at a preset limit. A limit switch will cause an alarm to be actuated on high air temperature. A moisture-sensing element, working in conjunction with the temperature controller, measures the relative humidity of the air entering the charcoal adsorber.

Differential pressure indicators show the pressure drop across the prefilters and the HEPA filters. The switch causes an alarm to be actuated if the pressure drop exceeds a preset limit. A flow switch in the emergency filtration system fan discharge duct automatically starts the standby system and initiates an alarm on low flow or operating fan failure.

The main control area envelope exhaust fans start automatically when the air-conditioning unit supply fan is started. Each fan inlet damper is opened automatically. The return air dampers to the air-conditioning unit are opened automatically.

Differential pressure-indicating controllers modulate dampers in the exhaust air ducts to maintain positive pressure of at least 3.2 mm water gauge.

Manual start of an air conditioning unit supply fan provides a start signal to the HECW pump and an interlock signal to open the cooling coil chilled water valve. A temperature indicating controller installed in the MCR modulates the chilled water valve to maintain space temperatures. A moisture sensor controls the operation of a humidifier. The exhaust fan starts automatically when the supply fan starts.

During winter, the electric unit heaters in the equipment rooms are cycled by temperature-indicating control switches, located within the filter rooms and the air-conditioner rooms.

The supply, return and exhaust air ducts have manual balancing dampers provided in the branch ducts for balancing purposes. The dampers are locked in place after the system is balanced.

9.4.1.1.7 Regulatory Guide 1.52 Compliance Status

The control room habitability area emergency filter units comply with all applicable provisions of Regulatory Guide 1.52, Section C, except as noted below.

The revisions of ANSI N509 and ANSI/ASME AG-1 listed in Table 1.8-21 are used for ABWR ESF filter train design; the Regulatory Guide references older revisions of these standards.

9.4.1.1.8 Standard Review Plan 6.5.1 Compliance Status

The control room habitability area emergency filtration units comply with SRP 6.5.1, Table 6.5.1-1.

9.4.1.2 C/B Safety-Related Equipment Area HVAC

9.4.1.2.1 Design Basis

(1) The C/B safety-related equipment area C/B SREA HVAC System is designed with sufficient redundancy to ensure operation under emergency conditions, assuming the failure of any one active component.

(2) The C/B SREA HVAC System is designed to provide a controlled temperature environment to ensure the continued operation of safety-related equipment under accident conditions.

(3) The C/B SREA HVAC System and components are Seismic Category I and are located in a Seismic Category I control building structure that is tornado-missile, and flood protected.

(4) Tornado missile barriers and tornado dampers are provided at each intake and exhaust structure.

(5) The rooms cooled by the C/B SREA HVAC System are maintained at positive pressure relative to atmosphere during normal and accident conditions. This is achieved by sizing intake fans larger than exhaust fans.

9.4.1.2.2 Power Generation Design Basis

(1) The C/B SREA HVAC System is designed to provide an environment with controlled temperature during normal operation to ensure the comfort and safety of plant personnel and the integrity of the safety-related electrical and RCW equipment.

(2) The system is designed to facilitate periodic inspection of the principal system components.

(3) Design outside air temperature for the C/B HVAC System are 46°C during the summer and –40°C during winter.

(4) Design inside air temperatures for the C/B safety-related equipment areas are 40°C maximum in the summer and a minimum of 10°C in the winter. Battery rooms shall have sufficient air supply to keep the temperature between 10°C and 40°C.

9.4.1.2.3 System Description

The C/B SREA HVAC System is divided into three independent subsystems with each subsystem serving a designated divisional area for Divisions A, B, and C. Non-safety-related equipment is cooled by non-safety-related FCUs.

Each subsystem consists of an ACU, two 100% capacity supply fans, and two 100% capacity exhaust fans. The ACU contains a medium efficiency bag filter section, and a cooling coil section.

The exhaust fans discharge to the atmosphere.

The C/B SREA HVAC system flow rates are given in Table 9.4-3, and system component descriptions are given in Table 9.4-4.

9.4.1.2.3.1 Safety-Related Subsystem Division A

Subsystem Division A specifically serves:

(1) Safety-related battery Division I

(2) HECW chiller Division A

(3) RCW water pump and heat exchanger Division A

(4) HVAC equipment Division A

(5) Safety-related electrical equipment Division I

(6) Non-safety-related power supplies

(7) Non-safety-related electrical equipment

9.4.1.2.3.2 Safety-Related Subsystem Division B

Subsystem Division B specifically serves:

(1) Safety-related battery Division II and Division IV

(2) HECW chiller Division B

(3) RCW pump and heat exchanger Division B

(4) HVAC equipment Division B

(5) Safety-related electrical equipment Division II and Division IV

Supply and exhaust ducts have fire dampers at firewall penetrations.

9.4.1.2.3.3 Safety-Related Subsystem Division C

Subsystem Division 3 specifically serves:

(1) Safety-related battery Division III

(2) HECW chiller Division C

(3) RCW water pump and heat exchanger DivisionC

(4) HVAC equipment Division C

(5) Safety-related electrical equipment Division III

(6) Non-safety-related MG sets

9.4.1.2.4 Safety Evaluation

The safety-related equipment HVAC System is designed to ensure the operability of the safety-related equipment, and to limit the hydrogen concentration to less than 2% by volume in the battery rooms during system balancing to ensure the rooms exhaust the required air directly to the exhaust fans. All safety-related HVAC equipment and surrounding structures are of Seismic Category I design and are operable during loss of the offsite power supply.

The ductwork which serves these safety functions is termed ESF ductwork, and is of Seismic Category I design. ESF ducting is low-pressure safety grade ductwork designed to withstand the maximum positive and/or negative pressure to which it can be subjected under normal or abnormal conditions. Galvanized steel ASTM A526 or ASTM A527 is used for outdoor air intake and exhaust ducts. All other ducts are welded black steel ASTM A570, Grade A or Grade D. Ductwork and hangers are Seismic Category I. Bolted flange and welded joints are qualified per ERDA 76-21.

Redundant components are provided where necessary to ensure that a single failure will not preclude adequate environmental control.

9.4.1.2.5 Inspection and Testing Requirements

Provisions are made for periodic operational tests of the fans and filters.

The balance of the system is proven operable by its use during normal plant operation. Portions of the system normally closed to flow can be tested to ensure operability and integrity of the system.

9.4.1.2.6 Instrumentation Application

One of the two air conditioning unit supply fans is started manually for normal operation.

On an alarm of exhaust fan or supply fan failure, the standby fan is automatically started, and an alarm is sounded in the main control room, indicating fan failure.

One of the safety-related electrical equipment area exhaust fans starts automatically when the air-conditioning unit supply fan is started.

On a smoke alarm in a division of the Control Building safety-related electrical equipment area HVAC System, that division of the HVAC System shall be put into smoke removal mode. No other division is affected by this action. For smoke removal, the recirculation duct damper is closed, and both exhaust fans are started in conjunction with a supply fan. Normal once through ventilation of the battery rooms also removes smoke from the battery rooms.

Fire dampers separating electrical divisions II and IV rooms that use fusible links in HVAC ductwork will close under airflow conditions after fusible link melts.

9.4.2 Spent Fuel Pool Area HVAC System

The Spent Fuel Pool Area HVAC System is part of the Reactor Building secondary containment HVAC System described in Subsection 9.4.5.1.

9.4.3 Auxilary Area HVAC System

The Auxilary Area HVAC System is also part of the Reactor Building Secondary Containment HVAC System described in Subsection 9.4.5.1.

9.4.4 Turbine Island HVAC System

The Turbine Island heating, ventilating, and air conditioning system consists of the Turbine Building (T/B) HVAC System and the Electrical Building (E/B) HVAC System.

9.4.4.1 Design Bases

9.4.4.1.1 Safety Design Bases

The T/B HVAC and E/B HVAC Systems do not serve or support any safety function and have no safety design bases.

9.4.4.1.2 Power Generation Design Bases

(1) The T/B HVAC and E/B HVAC are designed to supply filtered and tempered air to all Turbine Island spaces during all modes of normal plant operation, including plant startup and shutdown. The systems are also designed to maintain inside air temperatures above 15°C and below the following upper design limits:

- General Turbine Building areas: 40°C
- Condenser compartment: 43°C

- Resin tank room: 43°C
- Steam tunnel: 49°C
- Moisture separator compartments: 49°C
- Electrical Building areas: 40°C

(2) The E/B HVAC is designed to provide independent supply and exhaust ventilation to the electrical switchgear, chillers and air compressor rooms, and independent exhaust for the combustion turbine generator and auxiliary boiler rooms. The ventilation exhaust for these areas is discharged directly to the atmosphere. Recirculation from clean areas is provided.

(3) The T/B HVAC is designed to direct airflow from areas of low potential radioactivity to areas of high potential radioactivity. The T/B HVAC design is based on supplying air from the Turbine Building periphery (outer walls) both above and below the operating floor and ventilating areas radially inwards towards the return/exhaust air inlet points located below the operating floor in equipment rooms, the condenser area and under the building roof. The main stairwells that are designed for personnel evacuation routes are pressurized to prevent infiltration of smoke from other Turbine Building areas, during a fire.

(4) The T/B HVAC is designed to minimize exfiltration by maintaining a slightly negative pressure by exhausting 10% more air than is supplied to the Turbine Building.

(5) Exhaust air from potentially high airborne concentrations in turbine building areas or component vents is collected, filtered and discharged to the atmosphere through the Turbine Building Compartment Exhaust (TBCE) System.

(6) Exhaust air from other (low potential airborne concentrations) Turbine Building areas and component vents, except lube oil areas, is either exhausted to the atmosphere through a medium efficiency filter, or is returned to the supply air unit and mixed with outside air.

(7) Exhaust air from the lube oil areas is exhausted to the atmosphere without filtration.

(8) All Turbine Building exhaust air is directed to the plant stack, where it is monitored for radiation prior to being discharged to the atmosphere.

(9) Upon high radiation alarm from the plant stack radiation monitoring system, the operator will investigate and take corrective action.

(10) T/B HVAC maintains the T/B contaminated areas at a negative pressure with respect to atmosphere.

(11) The T/B HVAC is designed to provide for local air recirculation and cooling in high heat load areas using local unit coolers. A minimum of 50% standby cooling capacity is provided in areas where a loss of cooling would interfere with plant power generation objectives.

9.4.4.2 Description

9.4.4.2.1 T/B HVAC General Description

The T/B HVAC airflow diagram is shown on Figure 9.4-2a; the system instruments and controls are illustrated on Figure 9.4-2b; equipment design parameters are listed in Table 9.4-5.

The Turbine Building supply air units, main exhaust fans, equipment compartment exhaust fans, filters, and control panels are located in the T/B HVAC equipment rooms at elevation 30,300mm, and the floor above. The lube oil area exhaust fans are located in the vicinity of lube oil reservoir room. Individual unit coolers and unit heaters are located in the areas that they serve.

Potentially high radioactive concentration exhaust air is filtered and discharged to the atmosphere. Exhaust air from clean and low potential airborne contamination areas is either discharged to the atmosphere or recirculated.

All Turbine Building ventilation systems and subsystems that are required to sustain normal plant operation are provided with redundant fans on automatic standby.

9.4.4.2.1.1 Turbine Building Supply (TBS) System

The TBS System consists of (1) outside air intake louvers, (2) return and exhaust air modulating dampers with minimum outside air damper position, (3) low and high efficiency filters, (4) hot water heating coils, (5) chilled water cooling coils, and (6) three 50% capacity supply fans.

Two out of three fans are normally operated to supply filtered and, if required, temperature adjusted air to all levels of the Turbine Building. The third fan is a standby unit, which starts automatically upon failure of either operating fan. Each supply fan is provided with pneumatically-operated inlet vanes, which maintain a constant airflow rate and pneumatically-operated isolation shutoff dampers.

The TBS System runs with 100% outside air during normal plant operation whenever outside air temperature is moderate enough to contribute to maintaining suitable inside air conditions at the minimum operating cost. The T/B HVAC modulates the return, exhaust and outside air dampers to maximize inside air temperature control by outside air, and minimize the energy used for either cooling by the Chilled Water System or heating by the House Boiler System.

On extreme outside air temperature conditions (either high or low), the outside air intake dampers are at their minimum position. Maximum inside air, as available from the building clean and low potential airborne contamination areas only, is recirculated by the T/B HVAC exhaust/return fans to the supply air inlet plenum.

The TBS fans are started by handswitches located on local control panels. The supply fans are interlocked with the T/B HVAC exhaust fans and T/B HVAC compartment exhaust fans to ensure that the exhaust fans are running before a supply fan is started.

The TBS air heating and cooling coil performance is controlled by temperature controllers modulating hot water and chilled water flow control valves at the coil.

The TBS fans are started by handswitches located on a local control panel.

9.4.4.2.1.2 Turbine Building Exhaust (TBE) System

The air drawn by TBE fans from the building clean and low potentially contaminated areas is filtered through medium efficiency particulate filters (bag type) and either exhausted through the monitored plant stack or returned to the T/B HVAC supply plenum and mixed with outside air.

The TBE System is provided with three 50% capacity fans downstream of the filter train. Two fans are normally in operation and one is on automatic standby.

A filter bypass is provided to allow smoke purging from the Turbine Building in case of fire. All three TBE fans can be operated simultaneously to provide maximum smoke removal, as desired. Fire dampers with fusible links in HVAC ductwork will close under airflow conditions after fusible link melts.

The T/B HVAC exhaust fans are provided with inlet vanes and isolation dampers. A pressure differential controller automatically adjusts the blade pitch of the operating fans to maintain the desired negative pressure in the Turbine Building. Failure of one operating exhaust fan automatically starts the standby fan and associated controls. The T/B HVAC exhaust fans are interlocked with the T/B HVAC supply fans.

9.4.4.2.1.3 Turbine Building Compartment Exhaust (TBCE) System

The TBCE System consists of two 100% capacity exhaust fans, one common medium efficiency filter unit and associated controls. One fan is normally in operation, and the other fan is on automatic standby. The system also includes a 100% capacity filter bypass duct for purging smoke in case of fire.

Except when smoke removal is required, air is exhausted from the potentially high airborne concentration compartments and equipment vents, filtered through a medium efficiency filter (bag type) before it is released to the atmosphere through the plant stack.

Two exhaust fans are provided with inlet vanes and isolation dampers. An airflow controller automatically adjusts the inlet vanes of the operating fan to maintain a constant system exhaust airflow rate. In the automatic mode, loss of flow from the operating fan starts the standby fan and its associated controls.

9.4.4.2.1.4 Turbine Building Lube Oil Area Exhaust (TBLOE) System

The TBLOE System includes two 100% capacity exhaust fans, isolation dampers and exhaust ductwork. The TBLOE fans discharge the exhaust air directly to the atmosphere through the plant stack. One fan is designed to continuously exhaust at a constant volumetric flow rate from the lube oil process and storage rooms and rooms having electrohydraulic fluids. Supply air to these rooms is delivered by the T/B HVAC supply fans. A bypass duct is provided around the lube oil exhaust fans for purging high temperature combustion products and limiting room pressurization in case of fire in one of the rooms.

9.4.4.2.1.5 T/B HVAC Unit Coolers and Electric Unit Heaters

Local unit coolers and electric unit heaters are provided as required in the following rooms: condenser compartments, condensate pump room, heater drain pump rooms, filter valve room, demineralizer pump and valve rooms, TCW heat exchanger areas, condensate control station, reactor feed pump power supply room, demineralizer room and filter maintenance area, TCW pump area, SJAE and recombiner rooms, upper level above the turbine operating floor.

The unit coolers are supplied with chilled water from the Chilled Water System.

Temperature controls for the unit coolers and electric unit heaters are located in the unit inlet air path or installed nearby in the room served.

9.4.4.2.2 E/B HVAC General Description

The E/B HVAC schematic diagram is shown on Figure 9.4-2c.

9.4.4.2.2.1 Electrical Building HVAC System

The Electrical Building HVAC System is provided with two 100% capacity air supply fans and two 100% capacity exhaust fans.

The air supply fan draws outside air through louvers, control dampers, low efficiency filters, and chilled water coils, and discharges air directly into the switchgear, chiller, combustion turbine generator, house boiler and air compressor rooms. Ductwork and bypass dampers are provided to allow recirculation of air from the switchgear and chiller rooms.

The E/B HVAC system maintains the Electrical Building at a positive pressure with respect to atmosphere.

The exhaust system discharges air directly to the atmosphere through shutoff dampers and outside louvers.

9.4.4.2.2.2 E/B HVAC Unit Coolers and Electric Unit Heaters

Local unit coolers and/or electric unit heaters are provided as required in the chiller, air compressor and combustion turbine generator rooms. The unit coolers are supplied with chilled water from the Chilled Water System.

Temperature controls for the unit coolers and electric unit heaters are located in the unit inlet air path or installed nearby in the area served.

9.4.4.3 Evaluation

The TBS and E/B HVAC have no safety design bases and serve no safety function.

The T/B HVAC is designed to maintain airflows from potentially low airborne radioactivity areas to areas of higher potential radioactivity. Ventilation system releases are monitored at the plant stack in compliance with GDC 60 and 64. Where a system is provided with a redundant fan, failure of an operating fan automatically starts the standby fan to maintain continuity of ventilation.

The exhaust air from the T/B HVAC is monitored for radioactivity prior to discharge from the plant stack. Upon detection of high radiation, alarms are annunciated locally and in the main control room. Refer to Section 11.5 for a description of the Radiological Monitoring System.

Evaluation of the T/B HVAC and E/B HVAC with respect to fire protection is discussed in Subsection 9.5.1. Fire dampers with fusible links in HVAC ductwork will close under airflow conditions after fusible link melts.

9.4.4.4 Inspections and Test Requirements

The system is designed to permit periodic inspection of important components, such as fans, motors, belts, coils, filters, duct work dampers, piping and valves to assure the integrity and capability of the system. Standby components can be tested periodically to ensure system availability.

All major components are tested and inspected as separate components prior to installation, and as integrated systems after installation, to ensure design performance. The systems are preoperationally tested in accordance with requirements of Chapter 14.

Periodic inspections and measurements include airflows, water flows, air and water temperatures, filter pressure drops, controls positions, to verify the systems condition, and ensure operability and integrity of the systems for normal plant operation.

9.4.4.5 Instrumentation Application

All control actuations, indicators, and alarms for normal plant operation are located in local control panels in the T/B HVAC and E/B HVAC equipment areas. Any one or more alarms at a local control panel will be retransmitted to the main control room as a single alarm.

Controls and instrumentation for the T/B HVAC and E/B HVAC include:

(1) Heating and cooling temperature indicators and controls for the entering mixed air and recirculated air.

(2) Local low and high temperature switches and alarms for heated and cooled air supply with summary panel trouble alarm to the control room computer.

(3) Differential pressure indicators, differential pressure switches, and high alarm for the air filters.

(4) Airflow indicator and control for each supply fan.

(5) Airflow failure switch and alarm for each exhaust fan, with summary panel trouble alarm to the control room computer.

9.4.5 Reactor Building HVAC System

The safety-related and non-safety-related equipment areas of the Reactor Building are served by the reactor building HVAC system and is designed to provide an environment with controlled temperature to insure the comfort and safety of plant personnel and the

integrity of equipment and components. The Reactor Building HVAC System is composed of the following subsystems:

(1) R/B Secondary Containment HVAC System

(2) R/B Safety-Related Equipment HVAC System

(3) R/B Non-Safety-Related Equipment HVAC System

(4) R/B Safety-Related Electrical Equipment HVAC System

(5) R/B Safety-Related Diesel Generator HVAC System

(6) R/B Primary Containment Supply/Exhaust System

(7) R/B Mainsteam Tunnel HVAC System

(8) R/B Reactor Internal Pump ASD HVAC System

9.4.5.1 R/B Secondary Containment HVAC System

9.4.5.1.1 Design Bases

9.4.5.1.1.1 Safety Design Bases

Except for the secondary containment inboard and outboard isolation damper, the system is classified as non-safety-related.

The R/B Secondary Containment HVAC System is designed to isolate the secondary containment in a harsh environment with redundant Seismic Category I inboard and outboard safety-related dampers, but otherwise has no other safety-related function as defined in Section 3.2. Failure of the system does not compromise any safety-related equipment or component and does not prevent safe reactor shutdown. Provisions are incorporated to minimize release of radioactive substances to atmosphere and to prevent operator exposure.

9.4.5.1.1.2 Power Generation Design Bases

The Secondary Containment HVAC System is designed to provide an environment with controlled temperature and airflow patterns to insure both the comfort and safety of plant personnel and the integrity of equipment and components.

A negative pressure of 6.4mm water gauge is normally maintained in the secondary containment relative to the outside atmosphere.

The system design is based on outdoor summer conditions of 46°C and outdoor winter conditions of –40°C.

Design inside air temperatures for the secondary containment during normal operation is 40°C maximum in the summer and 10°C minimum in the winter.

9.4.5.1.2 System Description

The Reactor Building secondary containment HVAC System P&ID is shown in Figure 9.4-3. The system flow rates are given in Table 9.4-3, and the system component thermal capacities are given in Table 9.4-4. The HVAC System is a once-through type. Outdoor air is filtered, tempered and delivered to the secondary containment. The supply air system consists of filters, heating coils, cooling coils, and three 50% supply fans located in the Turbine Building. Two are normally operating and the other is on standby. The supply fan delivers conditioned air through ductwork and registers to the secondary containment equipment rooms and passages. The exhaust air system consists of 3 filters and 3-50% capacity fans to be located in the Turbine Building. The exhaust fans pull air from the secondary containment rooms through ductwork, and filters. Monitors measure radioactivity before it is exhausted from the plant stack. HVAC air supply and exhaust used by the ACS for primary containment deinerting is discussed in Subsection 6.2.5.2.1(14) and the shutdown mode of operation in Subsection 6.2.5.2(3). Electric unit heaters are located in the large component entrance building. Supply air is directed into the space when the interior doors are open.

9.4.5.1.3 Safety Evaluation

Operation of the Secondary Containment HVAC System is not a prerequisite to assurance of either of the following:

(1) Integrity of the reactor coolant pressure boundary.

(2) Capability to safely shut down the reactor and to maintain a safe shutdown condition.

However, the system does incorporate features that provide reliability over the full range of normal plant operation. The following signals automatically isolate the Secondary Containment HVAC System:

(1) Secondary containment high radiation signal (LDS)

(2) Refueling floor high radiation signal (LDS)

(3) Drywell pressure high signal (LDS)

(4) Reactor water level low signal (LDS)

(5) Secondary containment HVAC supply/exhaust fans stop

On a smoke alarm in a division of the secondary containment HVAC System, the HVAC System shall be put into smoke removal mode. To remove smoke from the secondary containment, the exhaust filter by-pass dampers are opened, standby exhaust and supply fans are started to provide an increase in airflow through the secondary containment. The divisions that are not on fire shall have their exhaust dampers closed to a partially closed position. This position shall be set during system setup. When the exhaust dampers are partially closed, the non-fire divisions' pressure will be maintained at a positive pressure. The division experiencing the fire will be maintained more negative with respect to the non-fire divisions.

Fire zone dampers can isolate the division with the fire until smoke removal is required. When fire doors are opened between divisions, the air pressure in the non-fire zones will limit smoke intrusion. Fire dampers with fusible links in HVAC ductwork will close under airflow conditions after fusible link melts.

9.4.5.1.4 Inspection and Testing Requirements

The system is designed to permit periodic inspection of important components, such as fans, motors, belts, coils, filters, ductwork, dampers, piping and valves, to assure the integrity and capability of the system. Standby components can be tested periodically to ensure system availability.

All major components are tested and inspected as separate components prior to installation and as integrated systems after installation, to ensure design performance. The system is preoperationally tested in accordance with the requirements of Chapter 14.

9.4.5.1.5 Instrumentation Application

The Secondary Containment HVAC System is started manually. Fan inlet dampers are interlocked to open before the fan is started. A flow switch installed in the operating fans discharge ductwork automatically starts the standby fan on indication of any operating fan failure due to a reduction in air.

The pneumatically-operated secondary containment inboard and outboard isolation dampers fail to the closed position in the event of loss of pneumatic pressure or loss of electrical power to the valve actuating solenoids. Upon receiving a leak detection system signal (Subsection 9.4.5.1.3), the isolation dampers automatically close, supply and exhaust fans stop, and a start signal calls for automatic SGTS operation. The supply fans and exhaust fans are interlocked to prevent operation of the supply fans when the exhaust fans are shut down.

9.4.5.2 R/B Safety-Related Equipment HVAC System

9.4.5.2.1 Design Bases

9.4.5.2.1.1 Safety Design Bases

The R/B Safety-Related Equipment HVAC System is designed to provide a controlled temperature environment to ensure the continued operation of safety-related equipment in harsh environment under accident conditions. The rooms cooled by the Safety-Related Equipment HVAC System are maintained at negative pressure relative to atmosphere by the secondary containment HVAC System during the normal operating mode, and by standby gas treatment system in isolation mode.

The systems and components are Seismic Category I and are located in the Reactor Building, separate and independent compartments of a Seismic Category I structure that is tornado-missile, and flood protected.

Fire protection has been evaluated and is described in Subsection 9.5.1.

9.4.5.2.1.2 Power Generation Design Bases

The system is designed to provide an environment with controlled temperature and humidity to ensure both the comfort and safety of plant personnel and the integrity of Reactor Building equipment. The systems are designed to facilitate periodic inspection of the principal system components.

9.4.5.2.2 System Description

The R/B Safety-Related Equipment HVAC System consists of 12 safety-related fan coil units (FCU) of division A, B, or C. Each FCU has the responsibility to cool one safety-related equipment room in the secondary containment. The safety-related equipment HVAC (fan coil units) system P&ID is shown in Figure 9.4-3. Space temperatures are maintained less than 40°C normally and less than 66°C during pump operation:

(1) RHR(A) pump room

(2) RHR(B) pump room

(3) RHR(C) pump room

(4) HPCF(B) pump room

(5) HPCF(C) pump room

(6) RCIC pump room

(7) FCS(B) room

(8) FCS(C) room

(9) SGTS(B) room

(10) SGTS(C) room

(11) CAMS(A) room

(12) CAMS(B) room

9.4.5.2.2.1 RHR, HPCF and RCIC Pump Room HVAC Systems

The FCU's automatically start when RHR pumps, HPCF pumps, and RCIC turbine are started. These rooms are normally cooled by the Secondary Containment HVAC System. The fan coil units are open ended and recirculate cooling air within the space served. Space heat is removed by cooling water passing through the coil section. Divisional Reactor Building Cooling Water (RCW) is used as the cooling medium. The units are fed from the same divisional power as that for the equipment being served. Drain pan discharge (condensate) is routed to a floor drain located within the room.

9.4.5.2.2.2 FCS Room HVAC Systems

Cooling of the FCS rooms are automatically initiated upon receipt of a secondary containment isolation signal or a manual FCS start signal.

These rooms are cooled by the Secondary Containment HVAC System during normal conditions. The units are open ended and recirculate cooling air within the space served. Space heat is removed by cooling water passing through the coil section. Divisional RCW is used as the cooling medium. The units are fed from the same divisional power as that for the FCS being served. Humidity is not specifically maintained at a set range, but is automatically determined by the surface temperature of the cooling coil. Drain pan discharge (condensate) is routed to a floor drain located within the room.

9.4.5.2.2.3 SGTS and CAMS HVAC Systems

Cooling of the SGTS and CAMS rooms are automatically initiated upon receipt of a secondary containment isolation signal.

These rooms are cooled by the Secondary Containment HVAC System during normal conditions. The units are open ended and recirculate cooling air within the space served. Space heat is removed by cooling water passing through the coil section. Divisional RCW is used as the cooling medium. The units are fed from the same divisional power as that for the equipment being served. Drain pan discharge (condensate) is routed to a floor drain located within the room.

9.4.5.2.3 Safety Evaluation

All equipment is located completely in a Seismic Category I structure that is tornado-missile, and flood protected. All equipment is designed to Engineered Safety Feature requirements.

9.4.5.2.4 Inspection and Testing Requirements

All major components are tested and inspected as separate components prior to installation to ensure design performance. The system is preoperationally tested in accordance with the requirements of Chapter 14.

Each HVAC System is periodically tested to assure availability upon demand. Equipment layout provides easy access for inspection and testing.

9.4.5.2.5 Instrumentation Application

Instrumentation and controls for the Secondary Containment Safety-Related Equipment HVAC System are designed for manual or automatic operation when safety-related equipment starts. Also, manual override from pushbutton stations in the main control room or at the MCC serving the unit.

9.4.5.3 Reactor Building Non-Safety-Related Equipment HVAC System

9.4.5.3.1 Design Bases

9.4.5.3.1.1 Safety Design Bases

The Non-safety-related Equipment HVAC System has no safety-related function as defined in Section 3.2. Failure of the system does not compromise any safety-related component and does not prevent safe reactor shutdown.

9.4.5.3.1.2 Power Generation Design Bases

The Non-safety-related Equipment HVAC System is designed to provide an environment with controlled temperature and humidity to insure both the comfort and safety of plant personnel and the integrity of equipment and components.

9.4.5.3.2 System Description

The R/B Non-Safety-Related HVAC System consists of six air handling units. The following rooms are cooled by the HVAC System:

(1) ISI room

(2) CRD control room

(3) SPCU pump room

(4) Refueling machine control room

(5) R/B Fuel pool cooling unit A

(6) R/B Fuel pool cooling unit B

These rooms are cooled by the Secondary Containment HVAC System during normal conditions. The units are open ended and recirculate cooling air within the space served. Space heat is removed by cooling water passing through the coil section. HVAC normal cooling water or divisional RCW is used as the cooling medium. The units are fed from the non-divisional power source. Humidity is not specifically maintained at a set range, but is automatically determined by the surface temperature of the cooling coil. Drain pan discharge (condensate) is routed to a drain sump located within the room.

9.4.5.3.3 Safety Evaluation

Operation of the R/B Non-safety-related Equipment HVAC System is not a prerequisite to assurance of either of the following:

(1) Integrity of the reactor coolant pressure boundary

(2) Capability to safely shut down the reactor and to maintain a safe shutdown condition

However, the system does incorporate features that provide reliability over the full range of normal plant operations.

9.4.5.3.4 Inspection

The system is designed to permit periodic inspection of important components, such as fans, motors, belts, coils, and valves, to assure the integrity and capability of the system.

All major components are tested and inspected as separate components prior to installation to ensure design performance. The system is preoperationally tested in accordance with the requirements of Chapter 14.

9.4.5.3.5 Instrumentation Application

The R/B Non-safety-related Equipment HVAC System starts manually.

9.4.5.4 R/B Safety-Related Electrical Equipment HVAC System

9.4.5.4.1 Design Bases

9.4.5.4.1.1 Safety Design Bases

The R/B Safety-Related Electrical Equipment HVAC System is designed to provide a controlled temperature environment to ensure the continued operation of safety-related equipment under accident conditions. The rooms cooled by the R/B Safety-Related Electrical Equipment HVAC System are maintained at positive pressure relative to atmosphere during normal and accident conditions. This is achieved by sizing intake fans larger than exhaust fans.

The power supplies to the HVAC systems for the R/B safety-related electrical equipment rooms allow uninterrupted operation in the event of loss of normal offsite power.

The system and components are located in a Seismic Category I structure that are tornado-missile, and flood protected, including tornado missile barriers on intake and exhaust structures.

For compliance with code standards and regulatory guides, see Sections 3.2 and 1.8.

On a smoke alarm in a division of the Reactor Building Safety-Related Electrical Equipment HVAC System, that division of the HVAC System shall be put into smoke removal mode manually. No other division is affected by this action. For smoke removal, the recirculation damper is closed, the exhaust fan bypass damper opened, the exhaust fan is stopped, and the smoke removal fan is started in conjunction with the supply fan. Normal once through ventilation of the day tank rooms also removes smoke from the day tank rooms.

The intake louvers are located at 15.2m above grade. The exhaust louvers are located at 13.3m above grade. (See general arrangement layout, Figures 1.2-10 and 1.2-11.)

9.4.5.4.1.2 Power Generation Design Bases

The system is designed to provide an environment with controlled temperature and humidity to ensure both the comfort and safety of plant personnel and the integrity of safety-related electrical equipment. The system is designed to facilitate periodic inspection of the principal system components.

The system design is based on outdoor summer conditions of 46.1°C and outdoor winter conditions of –40°C. The indoor design temperature in the safety-related electrical equipment areas is 40°C maximum in the summer and a minimum of 10°C in the winter except 50°C in the diesel generator (DG) engine rooms during DG operation. The system along with the DG supply fan maintain DG room temperature below 50°C.

9.4.5.4.2 System Description

Divisions A, B, and C Safety-Related Electrical Equipment HVAC Systems are independent, physically separated, and functionally identical except for their power bus designations and divisional source of cooling water. The HVAC System for each division of safety-related electrical equipment consists of two 100% capacity supply fans, two 100% capacity exhaust fans, and one air conditioning unit. Each air conditioning unit consists of a medium grade filter and a cooling coil. (See Figure 9.4-4 for the system P&ID. See Table 9.4-4 for the component descriptions.) The following divisional rooms are cooled by the Safety-Related Electrical Equipment HVAC System :

(1) Day tank room, Divisions A, B, C

(2) Diesel generator engine room, Divisions A, B, C

(3) Non-safety-related reactor internal pump ASD rooms

(4) Electrical equipment room, Divisions I, II, III, IV

(5) HVAC equipment room, Divisions A, B, C

(6) Remote shutdown panel room, Divisions A, B

(7) Diesel generator MCC area, Divisions A, B, C

(8) Non-Safety-Related FMCRD control panel rooms

HVAC system Division A serves electrical Division I, Division B serves electrical Divisions II and IV, and Division C serves electrical Division III of the electrical equipment rooms. Also, non-safety-related reactor internal pumps ASD rooms are cooled by the Electrical Equipment HVAC system.

9.4.5.4.3 Safety Evaluation

All safety-related equipment is located in a Seismic Category I structure that is tornado-missile, and flood protected. All HVAC equipment is designed to Engineered Safety Feature requirements.

9.4.5.4.4 Inspection and Testing Requirements

The systems are designed to permit periodic inspection of important components, such as fans, motors, coils, filters, ductwork, dampers, piping, and valves to assure the

integrity and capability of the system. Standby components can be tested periodically to ensure system availability.

The medium-grade filter differential pressure instrumentation is provided to determine the appropriate filter change out period. All major components are tested and inspected as separate components prior to installation to ensure design performance. The system is preoperationally tested in accordance with the requirements of Chapter 14.

9.4.5.4.5 Instrumentation Application

The R/B Safety-Related Electrical Equipment HVAC Systems of each division are started manually from a station located in the main control room. Air-flow failure is sensed by a flow switch which automatically starts the standby fan and activates an alarm in the control room to indicate the fan failure. The safety-related electrical equipment area exhaust fans start automatically when the air conditioning unit supply fan starts.

Temperature control is accomplished by monitoring the air temperature leaving the cooling coils. Temperature and flow are set for maximum operating loads. HECW flow is controlled by the temperature indicating controller.

Fire dampers separating electrical Divisions II and IV rooms that use fusible links in HVAC ductwork will close under airflow conditions after fusible links melt.

9.4.5.5 R/B Safety-Related Diesel Generator HVAC System

9.4.5.5.1 Design Bases

9.4.5.5.1.1 Safety Design Bases

The R/B Safety-Related Diesel Generator HVAC System P&ID is shown in Figure 9.4-3. The R/B Safety-Related Diesel Generator HVAC System flow rates are given in Table 9.4-3 and the system component descriptions are given in Table 9.4-4. The R/B Safety-Related Diesel Generator HVAC System is designed to provide filtered outdoor cooling air to ensure the continued operation of safety-related diesels under accident conditions. The power supplies to the outdoor cooling air supply systems for the safety-related diesel generator allow uninterrupted operation in the event of loss of normal offsite power.

Each division of three HVAC system divisions and components are Seismic Category I and are located in separate and independent compartments of the Reactor Building, a Seismic Category I structure that is tornado-missile, and flood protected, including tornado missile barriers on intake and exhaust structures.

For compliance with code standards and regulatory guides, see Sections 3.2 and 1.8.

For information on fire protection and smoke removal methods for the Safety-related Diesel Generator HVAC Systems, see Subsection 9.4.5.4.1.1.

9.4.5.5.1.2 Power Generation Design Bases

The system is designed to provide outdoor air to ensure the integrity of the safety-related diesel generators. The system is designed to facilitate periodic inspection of the principal system components.

9.4.5.5.2 System Description

The R/B Safety-Related Diesel Generated HVAC System for each of three diesel generator divisions consists of a filter and two supply fans and associated ductwork. They both take air from the outside through a tornado damper and a fire damper and distribute it to the diesel generator room. The exhaust air is forced out the exhaust louvers and a tornado damper.

9.4.5.5.3 Safety Evaluation

The diesel generator rooms are designed to the requirements specified in Section 3.2. The systems are connected to their corresponding division Class 1E bus, are independent, physically separated, and are operable after loss of offsite power supply.

The diesel generator compartments ventilated by the R/B safety-related Diesel Generator HVAC System are maintained at positive pressure relative to atmosphere when the diesel generators are operating. This is achieved by only using supply fans. At other times the diesel generator compartments are maintained at positive pressure relative to atmosphere by the R/B SREE HVAC System.

The intake louvers are located at 11.5m above grade and exhaust louvers are at 8.5m above grade (see general arrangement drawing, Figures 1.2-11 and 1.2-12).

All HVAC equipment is designed to Engineered Safety Feature requirements.

9.4.5.5.4 Tests and Inspection

The safety-related Diesel Generator HVAC Systems are periodically tested to assure availability upon demand. Equipment layout provides easy access for inspection and testing.

9.4.5.5.5 Instrumentation Application

The safety-related Diesel Generator HVAC System is interlocked to automatically start the outdoor air cooling fans with the diesel generator starting system with which it serves. A space thermostat shuts one fan down if space temperature is low and restarts the fan if space temperature is high.

The medium-grade filter differential pressure instrumentation is provided to determine the appropriate filter change out period.

Remote-manual override is provided from the main control room so fans can be started or stopped at any time.

The safety-related D/G HVAC System together with R/B Safety-related Electrical Equipment HVAC System maintain DG engine room temperature below 50°C.

9.4.5.6 R/B Primary Containment Supply/Exhaust System

9.4.5.6.1 Design Bases

9.4.5.6.1.1 Safety Design Bases

The Primary Containment Supply/Exhaust System has no safety-related function as defined in Section 3.2. Failure of the system does not compromise any safety-related component and does not prevent safe reactor shutdown. Provisions are incorporated to minimize release of radioactive substances to the atmosphere.

9.4.5.6.1.2 Power Generation Design Bases

The Primary Containment Supply/Exhaust System is capable of supplying filtered air to the drywell and wetwell penetrations of the Atmospheric Control System (ACS), and removing air/nitrogen from the ACS system drywell and wetwell penetrations and discharge out the plant stack. Refer to Subsection 6.2.5.2(3) for deinerting procedures and 6.2.5.2(14) for inerting procedures.

9.4.5.6.2 System Description

The Primary Containment Supply/Exhaust System consists of the supply fan, HEPA filter, an exhaust fan, ductwork, and controls. The Primary Containment Supply/Exhaust System P&ID is shown in Figure 9.4-3.

The system, when in use and if the air is not radioactive, discharges to the secondary containment HVAC System for filtering and discharge to the plant stack. If the air is radioactive, it is discharged through the SGTS system. During refueling, the airflow will be at least 3 air changes per hour of the drywell free air volume. Personnel entry into the drywell or wetwell shall not be permitted until a breathable oxygen level is obtained.

The Primary Containment Supply/Exhaust System takes its air supply from the Secondary Containment HVAC System air supply (Figure 9.4-3).

9.4.5.6.3 Safety Evaluation

Operation of the Primary Containment Supply/Exhaust System is not required to assure either of the following conditions:

(1) Integrity of the reactor coolant pressure boundary

(2) Capability to safely shut down the reactor and to maintain a safe shutdown condition

However, the system does incorporate features that provide reliability over the full range of normal plant operations.

9.4.5.6.4 Inspection and Testing Requirements

The Primary Containment Supply/Exhaust System is designed to facilitate implementation of a program of periodic inspection to assure proper function and reliability of all equipment and controls.

All major components are tested and inspected as separate components prior to installation to ensure design performance. The system is preoperationally tested in accordance with the requirements of Chapter 14.

9.4.5.6.5 Instrumentation

The secondary containment exhaust radiation monitoring system detects high radiation in the primary containment exhaust. A high radiation signal actuates an alarm and closes the secondary containment isolation valve in the supply and exhaust ducts and automatically starts the SGTS. The SGTS is started when the drywell or wetwell radiation monitor level is high and before purging is started.

9.4.5.7 R/B Main Steam Tunnel HVAC System

9.4.5.7.1 Design Bases

9.4.5.7.1.1 Safety Design Bases

The Main Steam Tunnel HVAC System has no safety-related function as defined in Section 3.2. Failure of the system does not compromise any safety-related component and does not prevent safe reactor shutdown. Provisions are incorporated to minimize release of radioactive substances to the atmosphere and to prevent operator exposure.

9.4.5.7.1.2 Power Generation Design Bases

The Main Steam Tunnel HVAC System is designed to provide an environment with controlled temperature and airflow patterns to ensure both the comfort and safety of plant personnel and the integrity of equipment and components.

9.4.5.7.2 System Description

See Figure 9.4-3 for the P&ID of the Main Steam Tunnel HVAC System. The HVAC System is a closed system. Two fan coil units provide cooling to the steam tunnel. Each fan coil unit consists of a cooling coil and two fans. One fan is normally operating, with one on standby. The fan furnishes cooled air through ductwork and registers to various locations within the steam tunnel.

9.4.5.7.3 Safety Evaluation

Operation of the Main Steam Tunnel HVAC System is not required to assure either of the following:

(1) Integrity of the reactor coolant pressure boundary

(2) Capability to safely shut down the reactor and to maintain a safe shutdown condition

However, the system does incorporate features that provide reliability over the full range of normal plant operation.

9.4.5.7.4 Inspection and Testing Requirements

The Main Steam Tunnel HVAC System is inspected periodically to assure that all operating equipment and controls are functioning properly. Standby components are periodically tested to ensure that the standby equipment is operational.

All major components are tested and inspected as separate components prior to installation to ensure design performance. The system is preoperationally tested in accordance with the requirements of Chapter 14.

9.4.5.7.5 Instrumentation Application

The Main Steam Tunnel HVAC System is started manually. A flow switch installed in the operating fan discharge ductwork automatically starts the standby fan on indication of operating fan failure.

9.4.5.8 R/B Reactor Internal Pump ASD HVAC System

9.4.5.8.1 Design Bases

9.4.5.8.1.1 Safety Design Bases

The Reactor Internal Pump ASD HVAC System has no safety-related function as defined in Section 3.2. Failure of the system does not compromise any safety-related component and does not prevent safe reactor shutdown.

9.4.5.8.1.2 Power Generation Design Bases

The Reactor Internal Pump ASD HVAC System is designed to provide an environment with controlled temperature to insure the integrity of the RIP ASD.

9.4.5.8.2 System Description

Divisions 1 and 2 RIP ASD HVAC Systems are identical. The HVAC System for each division of the reactor internal pump ASD HVAC consists of two supply fans and a cooling coil. See Figure 9.4-5 for the system P&ID. The RIP ASD HVAC System flow rates are shown in Table 9.4-3, and the system component descriptions are given in Table 9.4-4.

9.4.5.8.3 Safety Evaluation

Operation of the RIP ASD HVAC System is not required to assure either of the following:

(1) Integrity of the reactor coolant pressure boundary

(2) Capability to safely shut down the reactor and to maintain a safe shutdown condition

However, the system does incorporate features that provide reliability over the full range of normal plant operation.

On an alarm of recirculation fan failure, the standby fan is automatically started, and an alarm is sounded inside the control room indicating fan failure.

9.4.5.8.4 Inspection

The system is designed to permit periodic inspection of important components, such as fans, motors, belts, coils, and valves, to assure the integrity and capability of the system.

All major components are tested and inspected as separate components prior to installation to ensure design performance. The system is preoperationally tested in accordance with the requirements of Chapter 14.

9.4.5.8.5 Instrument Application

The RIP ASD HVAC Systems are started manually from a station located in the main control room. Airflow failure sensed by the flow switch automatically starts the standby fan and activates an alarm in the control room to indicate the fan failure.

9.4.6 Radwaste Building HVAC System

9.4.6.1 Design Bases

9.4.6.1.1 Safety Design Bases

The Radwaste Building HVAC System has no safety-related function as defined in Section 3.2. Failure of the system does not compromise any safety-related system or component and does not prevent safe reactor shutdown. Provisions are incorporated to minimize release of radioactive substances to the atmosphere and to prevent operator exposure. The Radwaste Building HVAC System P&ID is shown in Figure 9.4-10.

9.4.6.1.2 Power Generation Design Bases

The Radwaste Building HVAC System is designed to provide an environment with controlled temperature and airflow patterns to insure both the comfort and safety of plant personnel and the integrity of equipment and components. The Radwaste Building is divided into two zones for air conditioning and ventilation purposes. These zones are the radwaste control room and the balance of the Radwaste Building.

A positive static pressure with respect to the balance of the building and to the atmosphere is maintained in the radwaste control room. The balance of the Radwaste Building is maintained at a negative static pressure with respect to the atmosphere.

The system design is based on an outdoor summer maximum of 46°C. Summer indoor temperatures include 24°C in the radwaste control room, 32°C in operating areas and corridors, a maximum temperature of 40°C in areas that may be occupied and 43°C in the equipment cells. Winter indoor design temperatures include 16°C in occupied areas, 21°C in the radwaste control room and 16°C in the equipment cells, based on an outdoor design temperature of –40°C.

9.4.6.2 System Description

The COL applicant will provide an equipment list and system flow rates including RG 1.140 compliance for NRC review (Subsection 9.4.10.2).

9.4.6.2.1 Radwaste Building Control Room

Heating, cooling and pressurization of the control room are accomplished by an air-conditioning system. The air-conditioning system is a unit air-conditioner consisting of a water-cooled condenser, compressor, cooling coil, heating coil, filters and fan. Outdoor air and recirculating air are mixed and drawn through a prefilter, a high efficiency filter, a heating coil, a cooling coil, and two 100% supply fans. One fan is normally operating and the other fan is on standby. A pressure differential controller regulates the exfiltration from the control room to maintain it at a positive static

pressure, preventing airborne radioactive contamination from entering. No separate exhaust fan system is required.

The Radwaste Control Room HVAC Smoke Removal System consists of one 100% fan. This fan is operated manually. Smoke from the control room is released directly to the atmosphere.

An area radiation monitor is provided in the radwaste control room and will alarm on high radiation to alert personnel in the area.

9.4.6.2.2 Radwaste Building Process Area HVAC System

The Radwaste Building Process Area HVAC System is a once-through type. Outdoor air is filtered, tempered and delivered to the non-contaminated areas of the building. The supply air system consists of a prefilter, a high efficiency filter, heating coil, cooling coil, and two 100% supply fans. One fan is normally operating and the other fan is on standby. The supply fan furnishes conditioned air through ductwork and diffusers, or registers to the work areas of the building. Electric unit heaters are provided in the trailer bays and the sorting table area. Air from the work areas is exhausted through the tank and pump rooms. Thus, the overall airflow pattern is from the least potentially contaminated areas to the most contaminated areas.

The exhaust air system consists of three 50% exhaust fans, two normally operating and one on standby. Exhaust air from the Radwaste Building is filtered through a prefilter and a high efficiency filter before release to the plant stack and it is monitored for airborne radioactivity. A high level of radioactivity activates an alarm in the main control room, simultaneously isolating the process area. The exhaust air is monitored before it is released to the main plant stack.

9.4.6.3 Safety Evaluation

Although the HVAC System is not safety-related as defined in Section 3.2, several features are provided to insure safe operation. A completely separate HVAC System is provided for the radwaste control room. Pressure control fans for radwaste areas are redundant, with provision for automatic start of the standby unit. Area and process exhaust radiation detectors and isolation dampers are provided to permit isolation of the radwaste process areas.

9.4.6.4 Tests and Inspections

The system is designed to permit periodic inspection of important components, such as fans, motors, belts, coils, filters, ductwork, piping and valves, to assure the integrity and capability of the system. Local display and/or indicating devices are provided for periodic inspection of vital parameters such as room temperature, and test connections are provided in exhaust filter trains and piping for periodic checking of air and water

flows for conformance to the design requirements. All major components are tested and inspected as separate components prior to installation to ensure design performance. The system is preoperationally tested in accordance with the requirements of Chapter 14.

9.4.6.5 Instrumentation Application

9.4.6.5.1 Radwaste Building Control Room

The air-conditioning unit for the radwaste control room HVAC is started manually. A temperature indicating controller modulates the air-conditioning system via chilled water valves and an electric heating coil to maintain space conditions. A differential pressure indicating controller modulates inlet vanes in the supply fan air inlets to maintain the positive static room pressure. Differential pressure indicators measure the pressure drop across the filter bank.

9.4.6.5.2 Radwaste Building Process Area HVAC

The air exhaust and supply fans for the Radwaste Building Process Area HVAC are started manually. The fan inlet dampers open when the fan is started. A flow switch installed in the exhaust fan discharge duct actuates an alarm on indication of fan failure in the main and radwaste control rooms and automatically starts the standby fan. The exhaust fan is interlocked with the supply fan to prevent the supply fan from operating if the exhaust fan is shut down.

Two pressure-indicating controllers modulate variable inlet vanes in the supply fan to maintain the area at a negative static pressure with respect to the atmosphere. The switch causes an alarm to be actuated if the negative pressure falls below the preset limit.

Differential pressure indicators measure the pressure drop across the filter section. The switch causes an alarm to be actuated if the pressure drop exceeds the preset limit.

Radiation monitors are installed in the radwaste process area exhaust duct to the main plant stack. A high radiation signal in the duct causes alarms to annunciate in the main control room and the radwaste control room.

If the radwaste process area exhaust radiation alarm continues to annunciate, the work area branch ducts are manually isolated selectively to locate the affected building area. Should this technique fail, because the airborne radiation has generally spread throughout the building, control room air conditioning continues operating. However, the air conditioning for the balance of the building is shut down. The operators, using approved plant health physics procedures, then enter the work areas to locate and isolate the leakage source.

The supply and exhaust air ductwork have manual balancing dampers provided in the branch ducts for balancing purposes. The dampers are locked in place after the system is balanced.

9.4.6.5.3 Incinerator Exhaust Stack

Radiation monitors are installed in the incinerator exhaust stack. A high radiation signal in the stack causes alarms to annunciate in the main control room and the radwaste control room. See Subsection 11.5.2.2.11 and Table 11.5-2.

9.4.7 R/B Safety-Related Diesel Generator HVAC System

The safety-related Diesel Generator HVAC System is part of the Reactor Building HVAC System described in Subsection 9.4.5.5.

9.4.8 Service Building HVAC System

This system serves all areas within the Service Building, including locker rooms, men and women's change rooms, laundry, lunch room, instrument repair room, HVAC equipment rooms, and the Technical Support Center (TSC). This system operates during all normal station conditions.

The Service Building HVAC System consists of two subsystems; the Clean Area HVAC System and the Controlled Area HVAC System.

9.4.8.1 Design Basis

9.4.8.1.1 Safety Design Basis

The Service Building HVAC System is not required to function in any but the normal station operating conditions and, therefore, has no safety bases.

9.4.8.1.2 Power Generation Design Bases

(1) The Clean Area HVAC System is designed to maintain a quality environment suitable for personnel health and safety in the Service Building. It is designed to limit the maximum temperature in the Service Building to 29°C. The temperature in each area conforms to the equipment requirements in that area.

(2) The Clean Area HVAC System provides a quantity of filtered outdoor air to purge any possible contamination.

(3) Both the Clean Area HVAC System and the Controlled Area HVAC System operate manually and continuously. Isolation dampers at each supply fan, each exhaust fan, and each filter package close when the respective equipment is not operating. There is an additional isolation damper at the

supply air inlet which closes when the supply air system is not operating. An automatic damper in the supply system ductwork regulates the flow of air to maintain the Service Building clean areas at a positive pressure with respect to the atmosphere.

(4) In the event of a loss of offsite electric power, the Service Building HVAC System is shut down.

(5) The clean areas served by the clean area HVAC system has an emergency filter train. It is manually operated. In an emergency it supplies filtered air for the TSC, OSC, lunch room, offices, health physics lab, security offices, and other normally clean areas.

9.4.8.2 System Description

(1) The Clean Area HVAC System supplies filtered, heated or cooled air to both the clean and controlled areas through a central fan system consisting of an outside air intake, Air Conditioning Unit consisting of filters, heating coils, cooling coils, two 50% capacity supply air fans and supply air ductwork.

(2) The Clean Area HVAC System has two 50% capacity exhaust air fans. They take air from the clean areas through the exhaust ducts and discharge the air on the Service Building roof.

(3) The Controlled Area HVAC System routes potentially contaminated air to two 50% capacity exhaust air fans to discharge the air to the common plant stack.

(4) The potentially contaminated areas are maintained at a slightly lower pressure than the surrounding clean areas and, therefore, the air flows from the clean areas to these potentially contaminated areas.

(5) Pressure control dampers are employed between clean and potentially contaminated areas and are of the backflow type and fail closed. This minimizes the backflow of contaminated air to clean areas when there is a loss of power and subsequent fan system shutdown.

(6) The clean area HVAC system is provided with an emergency filter train consisting of a heater/demister, prefilter, HEPA filter, 5.1 cm charcoal filter bed, a second HEPA filter, and two fans.

(7) Controls and Instrumentation

(a) Each fan and each exhaust filter package is controlled by hand switches located on local control panels. Pertinent system flow rates and

temperatures are also indicated on the local control panels. Trouble on local control panel is annunciated on the main control board.

(b) Controls are pneumatic and electric.

(c) Radiation monitors and provisions for toxic gas monitors at the supply air inlet with alarms to TSC.

(d) On manual initiation, the clean area HVAC system can be put into high radiation mode. On switch over, exhaust fans stop and emergency filter train starts. System pressurizes clean areas of the service building.

(e) Instrumentation is provided for the monitoring system operating variable during normal station operating conditions. The loss of airflow, high and low system temperature, and high differential pressure across various filters are annunciated on the local control panel. Trouble on the local panel is annunciated in the main control room.

(8) All power and water is provided from non-safety-related sources.

(9) The COL applicant will provide a detailed P&ID, system flow rates an equipment list, and compliance with RG 1.140 and toxic gas protection requirements and description of radiation monitors (if any) at the supply air inlet, for the Service Building HVAC system, including the TSC and the OSC, for NRC review. (See Subsection 9.4.10.1 for COL License Information.)

9.4.8.3 Safety Evaluation

(1) The Service Building HVAC System is not safety-related and is not required to assure either the integrity of the reactor coolant pressure boundary or the capability to shut down the reactor and maintain it in a safe shutdown conditions.

(2) Pressure control dampers are employed between clean and potentially contaminated areas and are of the backflow type and fail closed. This minimizes the backflow of contaminated air to clean areas when there is a loss of power and subsequent fan system shutdown.

(3) The system incorporates features to assure its reliable operation over the full range of normal station conditions.

(4) Clean areas are provided with emergency filtration system and a high radiation mode of operation.

(5) There are no sources (except health physics samples and calibration sources) of radioactivity inside the Service Building. However, the radiation levels inside the controlloed area of the Service Building can become to high due to leakage from the secondary containment or from the Turbine Building. If this happens, the controlled area HVAC system can be manually isolated to prevent releases to the environment via the subject HVAC system exhaust.

9.4.8.4 Testing and Inspection

All equipment is factory inspected and tested in accordance with the applicable equipment specifications and codes. System ductwork and erection of equipment is inspected during various construction stages. Preoperational tests are performed on all mechanical components and the system is balanced for the design air, and water flows and system operating pressures. Controls, interlocks and safety devices on each system are checked, adjusted, and tested to ensure the proper sequence of operation. A final integrated preoperational test is conducted with all equipment and controls operational to verify the system performance.

Maintenance will be performed on a scheduled basis in accordance with the equipment manufacturer's requirements.

The system is in operation during normal plant operation.

9.4.9 Drywell Cooling System

9.4.9.1 Design Bases

The Drywell Cooling System shall have the capability to maintain the drywell temperature, during normal operation, at temperatures specified in Section 3.11.

The Drywell Cooling System shall be capable of controlling the temperature rise of the drywell during normal operational transients so that the average drywell temperature does not exceed 58°C. The local temperature shall not exceed 75°C in the CRD area or 66°C elsewhere in the drywell.

The Drywell Cooling System is designed to provide sufficient air/nitrogen distribution so that proper temperature distribution can be achieved to prevent hot spots from occurring in any area of the drywell.

9.4.9.2 System Description

See Figures 9.4-8 and 9.4-9 for flow diagrams illustrating the drywell cooling system, and Table 9.4-1 for a listing of its components.The Drywell Cooling System is a recirculating system consisting of three fan coil units. Normally, two of the three fan coil units are in operation. Each fan coil unit consists of cooling coils, a drain pan, and a centrifugal fan. Cooling water comes from the RCW and HNCW Systems. Two sets of cooling coils are arranged in series. The return air passes over the first coil, which is cooled by the RCW System. Part of the cooled air is then cooled by the second coil, which is cooled by the HNCW System. This twice-cooled air is mixed with the air that bypasses the second cooling coil. Condensate that drips from the coils is routed to the drain system via the Leak Detection System. Instrumentation is installed in front of the Leak Detection System connection that monitors cooler condensate flow.

The Drywell Cooling System supplies conditioned air to a common distribution header. The air/nitrogen is then ducted to areas within the drywell for equipment cooling. These areas consist of the drywell head area, upper drywell, lower drywell, and reactor shield wall annulus. The Drywell Cooling System heat loads are provided in Table 9.4-2.

Gravity dampers and adjustable balancing dampers control distribution of the air/nitrogen to the various drywell spaces.

High drywell temperatures are alarmed in the main control room, alerting the operator to take appropriate corrective action. During normal plant operation, two fan coil units are operated. During LOPP (when no LOCA signal exists), fan coil units shall restart automatically when power is available from the combustion turbine generator. During a LOPP, chilled water from the HNCW System may or may not be available, but cooling should always be available from the RCW coils. The drywell fan coil units are not operated during a LOCA.

9.4.9.3 Safety Evaluation

Operation of the Drywell Cooling System is not a prerequisite to assurance of either one of the following:

(1) Integrity of the reactor coolant pressure boundary

(2) Capability to safely shut down the reactor and to maintain a safe shutdown condition

However, the system does incorporate features that provide reliability over the full range of normal plant operation. These features include the installation of redundant principal system components such as:

(1) Electric power

(2) Fan coil units

(3) Redundant chillers

(4) Ductwork

(5) Controls

(6) Cross-connection of all fan coil units

9.4.9.4 Inspection and Testing Requirements

Equipment design includes provisions for periodic testing of functional performance and inspection for system reliability. Standby components are fitted with test

connections so that system effectiveness, except for airflow or static pressure, can be verified without the units being online. Test connections are provided in the discharge air ducts for verifying calibration of the operating controls.

9.4.9.5 Instrumentation Applications

Drywell cooling unit function is manually controlled from the main control room. The instrumentation which monitors system performance is part of the Atmospheric Control System and the Leak Detection and Isolation Systems.

9.4.10 COL License Information

9.4.10.1 Service Building HVAC System

The COL applicant shall provide a detailed P&ID, system flow rates and an equipment list, compliance with RG 1.140, toxic gas protection requirements, and description of radiation monitors at the supply air inlet (if any), for the Service Building HVAC system, including the TSC and OSC, for NRC review. (Subsection 9.4.8.2)

9.4.10.2 Radwaste Building HVAC System

The COL applicant shall supply detailed equipment lists and system flow rates and compliance with RG 1.140 for the Radwaste Building HVAC System (Subsection 9.4.6.2).

Table 9.4-1 Drywell Cooling System Non-Safety-Related Components

RCW Cooling Coils	
Number	3
Type	Plate Fin
Airflow Rate	1000 m^3/min.
Cooling Capacity	1023.42 MJ/h
Air Temperature (Inlet/Outlet)	57°C/42°C
Water Temperature (Inlet/Outlet)	35°C/40°C
Water Flow Rate	13.5 L/s
HNCW Cooling Coils	
Number	2
Type	Plate Fin
Air Flow Rate	277 m^3/min.
Cooling Capacity	791.31 MJ/h
Air Temperature (Inlet/Outlet)	44°C/12°C
Water Temperature (Inlet/Outlet)	7°C/12°C
Water Flow Rate	10.5 L/s
Fans	
Number	3
Type	Centrifugal
Capacity	1000 m^3/min.
Head	1.47E+03 Pa

Table 9.4-2 Drywell Cooling System Non-Safety-Related Heat Loads

Heat Loads		Normal Plant Operation Sensible Heat Load MJ/h
Sensible Heat Loads	Drywell Head Area	146.5
	Upper Drywell	837.4
	Lower Drywell	180
	Shield Wall Annulus	782.9
	Upper Drywell Piping Area	1067.6
Equipment	Fan Motors	33.5
	Heatup Load of Fans	293.1
Sensible Heat Load (Total)		3341*
Latent Heat Load		297.3
Design Heat Load		3638.3

* The sensible heat load during plant maintenance mode is about 460.5 MJ/h.

Table 9.4-3 HVAC Flow Rates (Response to Question 430.243)

Safety-Related HVAC System	Flow Rates (m^3/h)
R/B Electrical HVAC Division A	30,000
R/B Electrical HVAC Division B	30,000
R/B Electrical HVAC Division C	30,000
DG HVAC Division A	160,000
DG HVAC Division B	160,000
DG HVAC Division C	160,000
C/B Electrical HVAC Division A	35,000
C/B Electrical HVAC Division B	35,000
C/B Electrical HVAC Division C	35,000
CRHA HVAC Division B	80,000
CRHA HVAC Division C	80,000
Non-Safety-Related HVAC Systems	**Flow Rates (m^3/h)**
R/B Secondary Containment HVAC	168,500
T/B Ventilation System	341,500
RIP ASD HVAC Division A	50,000
RIP ASD HVAC Division B	50,000
Radwaste Building HVAC*	
Service Building HVAC*	

* The COL applicant shall supply these flow rates. See COL Subsection 9.4.10.1 for the Service Building and 9.4.10.2 for the Radwaste Building.

Table 9.4-4 HVAC System Component Descriptions - Safety-Related Heating/Cooling Coils (Response to Question 430.243)

Heating/Cooling Coils	Quantity	Cooling (MJ/h)	Heating (MJ/h)
R/B Electrical HVAC Division A	1	675.25	No Coil Required
R/B Electrical HVAC Division B	1	675.25	No Coil Required
R/B Electrical HVAC Division C	1	675.25	No Coil Required
C/B Electrical HVAC Division A	1	886.26	No Coil Required
C/B Electrical HVAC Division B	1	886.26	No Coil Required
C/B Electrical HVAC Division C	1	886.26	No Coil Required
CRHA HVAC Division B	1	662.61	591.59
CRHA HVAC Division C	1	662.61	591.59
CRHA Emergency HVAC Division B	1	-	252
CHRA Emergency HVAC Division C	1	-	252

Table 9.4-4a HVAC System Component Descriptions - Safety-Related Fans (Response to Question 430.243)

Fans	Quantity	Capacity (m^3/h)	Rated Power (kW)
R/B Electrical Div A Supply Fans	2 (1 on standby)	30,000	75
R/B Electrical Div B Supply Fans	2 (1 on standby)	30,000	75
R/B Electrical Div C Supply Fans	2 (1 on standby)	30,000	75
R/B Electrical Div A Exhaust Fans	2 (1 on standby)	6,000	4
R/B Electrical Div B Exhaust Fans	2 (1 on standby)	6,000	4
R/B Electrical Div C Exhaust Fans	2 (1 on standby)	6,000	4
DG Div A Supply Fans	2	80,000	22
DG Div B Supply Fans	2	80,000	22
DG Div C Supply Fans	2	80,000	22
C/B Electrical Div A Supply Fans	2 (1 on standby)	35,000	75
C/B Electrical Div B Supply Fans	2 (1 on standby)	35,000	75
C/B Electrical Div C Supply Fans	2 (1 on standby)	35,000	75
C/B Electrical Div A Exhaust Fans	2 (1 on standby)	4,000	4
C/B Electrical Div B Exhaust Fans	2 (1 on standby)	4,000	4
C/B Electrical Div C Exhaust Fans	2 (1 on standby)	4,000	4
CRHA Div B Supply Fans	2 (1 on standby)	80,000	22
CRHA Div C Supply Fans	2 (1 on standby)	80,000	22
CRHA Div B Exhaust Fans	2 (1 on standby)	5,000	4
CRHA Div C Exhaust Fans	2 (1 on standby)	5,000	4
CRHA Emergency Div B Filter Supply Fan	2 (1 on standby)	5,100	7.5
CRHA Emergency Div C Filter Supply Fan	2 (1 on standby)	5,100	7.5

Table 9.4-4b HVAC System Component Descriptions - Safety-Related Filter (Response to Question 430.243)

Filters	Quantity	Capacity (m^3/h)
R/B Electrical Div A Filter	1	35,000
R/B Electrical Div B Filter	1	35,000
R/B Electrical Div C Filter	1	35,000
DG Div A Filter	1	200,000
DG Div B Filter	1	200,000
DG Div C Filter	1	200,000
C/B Electrical Div A Filter	1	40,000
C/B Electrical Div B Filter	1	40,000
C/B Electrical Div C Filter	1	40,000
CRHA Div B Filter	1	80,000
CRHA Div C Filter	1	80,000

Table 9.4-4c HVAC System Component Descriptions — Emergency Use Adsorption Units (Safety Related) (Response to Question 430.243)

Emergency Use Adsorption Unit	Quantity	Capacity (m^3/h)
CRHA Emergency Div B Filter	1	5,100
CRHA Emergency Div C Filter	1	5,100

Table 9.4-4d Not Used

Table 9.4-4e HVAC System Component Descriptions — Safety-Related Fan Coil Units (Response to Question 430.243)

Safety-Related Fan Coil Units	Capacity (MJ/h)
HPCF Pump Room Div B	460.55
HPCF Pump Room Div C	460.55
RHR Pump Room Div A	307.73
RHR Pump Room Div B	307.73
RHR Pump Room Div C	307.73
RCIC Pump Room Div A	69.08
FCS Room Div B	54.85
FCS Room Div C	54.85
CAMS Room Div A	83.74
CAMS Room Div B	83.74
SGTS Room Div B	16.75
SGTS Room Div C	16.75

Table 9.4-4f HVAC System Component Descriptions—Non-Safety-Related Heating Cooling Coils (Response to Question 430.243)

Heating/Cooling Coils	Quantity	Cooling (MJ/h)	Heating (MJ/h)
R/B Secondary Containment HVAC	3 (1 on standby)	6435.95	9601.17
RIP ASD HVAC Division A	1	2110.15	
RIP ASD HVAC Division B	1	2110.15	

Table 9.4-4g HVAC System Component Descriptions—Non-Safety-Related Fans (Response to Question 430.243)

Fans	Quantity	Capacity (m^3/h)
R/B Secondary Containment Supply Fans	3 (1 on standby)	84,250
R/B Secondary Containment Exhaust Fans	3 (1 on standby)	86,250
R/B Primary Containment Supply Fan	1	22,000
R/B Primary Containment Exhaust Fan	1	22,000
RIP ASD Division A Supply Fans	2 (1 on standby)	50,000
RIP ASD Division B Supply Fans	2 (1 on standby)	50,000

Table 9.4-4h HVAC System Component Descriptions—Non-Safety-Related Filters (Response to Question 430.243)

Filters	Quantity	Capacity (m^3/h)
R/B Secondary Containment HVAC	3 (1 on standby)	86,250
R/B Primary Containment Intake HEPA Filter	1	22,000
R/B Secondary Containment Exhaust Fans	3	57,500 (each)

Table 9.4-4i HVAC System Component Descriptions—Non-Safety-Related Air Handling Units (Response to Question 430.243) *

Non–Safety-Related Air Handling Units	Quantity	Capacity (MJ/h)
Main Steam Tunnel	2	628.02
Refueling Machine Control Room	1	83.74
ISI Room	1	54.43
MG Set Room	2	1047.96
C/B Non-Safety-Related Electric Room	1	211.01
R/B FPC Room	2	28.47
CRD Control Room	1	18.42
SPCU Pump Room	1	42.29

* The COL applicant shall supply equipment lists for the Service Building HVAC and the Radwaste Building HVAC System. See Subsection 9.4.10.1 for the Service Building, and 9.4.10.2 for the Radwaste Building.

Table 9.4-5 Turbine Building and Electrical Building HVAC System—Non-Safety-Related Equipment*

Item	Turbine Building Air Supply TRV–F–1A thru C	T/B Clean Area Return/Exhaust TBV–F–2A thru C	T/B Equipment Compartment Exhaust TBV–F–24A &–24B	T/B Lube Oil Exhaust TBV–F–4A & B	Condensate Pump Room Recirc. Unit TBV–F–8A thru C
Type	Builtup unit	Central station air handle	Builtup unit	Fan	Central station air handler
Number of units	1	3	1	2	3-50% each
Flow rate (m^3/h)	341,500	168,000/unit	272,000	12,600	51,000
Fan:					
Type	Centrifugal	Centrifugal	Centrifugal	Centrifugal	Centrifugal
No. of fans per unit	3	1	2	1	1
No. of running fans	2	2	1	1	2
Heating coils:		None		None	None
No. of banks per unit	1	–	1		–
Capacity, each (MJ/h)	11,605.81	–	369.28		–
Cooling coils:		None	None	None	
No. of banks per unit	6	–	–	–	
Capacity, each (MJ/h)	1582.61	–	–	–	949.57
Prefilters:		None	None	None	
Type	Glass, roll	–	–		–
Capacity (m^3/h)	356,800	–	–		–
ASHRAE 52 eff.	35%	–	–		–
Filters:				None	
Type	High eff.	Bag type,	Bag type,	–	Medium eff
Capacity (m^3/h)	341,500	168,000/unit	272,000	–	51,000
ASHRAE 52 eff.	85%	90%	90%	–	85%

* Response to Question 430.242C.

Table 9.4-5a Turbine Building and Electrical Building HVAC System—Non-Safety-Related Equipment (Continued)

Item	Heater Drain Pump P1A Room Recirc. Unit TBV–F–9A thru C	Heater Drain Pump P1B Room Recirc. Unit TBV–F–9D thru F	Filter Pump Recirc. and Valve Room Unit TBV–F–10A thru C	Demineralizer Pump and Valve Room Recirc. Unit TBV–F–12A thru C	Reactor Feed Pump Power Supply Room Recirc. Unit TBV–F–13A thru C
Type	Central station air handler	Central station air handler	Central station air handler	Central station air handler	Central station air handler
Number of units	3-50% each	3-50% each	3-50% each	3-50%	3-50%
Flow rate (m^3/h)/unit	11,900	11,900	5,200	8,700	1,825
Fan:					
Type	Centrifugal	Centrifugal	Centrifugal	Centrifugal	Centrifugal
No. of fans per unit	1	1	1	1	1
No. of running fans	2	2	2	2	2
Heating coils:	None:	None:	None:	None:	None
No. of banks per unit	–	–	–	–	–
Capacity, each (MJ/h)	–	–	–	–	–
Cooling coils:					
Capacity, each (MJ/h)	221.57	221.57	97.13	335.36	34.33
Filters:					
Type	Medium eff	Medium eff	Medium eff	Medium eff	Medium eff
Capacity (m^3/h)	11,900	11,900	5,200	8,700	1,825
ASHRAE 52 eff.	85%	85%	85%	85%	85%

Table 9.4-5b Turbine Building and Electrical Building HVAC System—Non-Safety-Related Equipment (Continued)

Items	TCW Heat Exchanger Area Recirculation Unit TBV–F–14A thru C	Condenser Compt. Room Level 2 Recirculation Unit TBV–F–15A thru C	SJAE A Room Recirculation Unit TBV–F–17A thru C	SJAE B Room Recirculation Unit TBV–F–17D thru F	Demineralizer Room Recirculation Unit TBV–F–18A thru C
Type	Central station air handler	Central station air handler	Central station air handler	Central station air handler	Central station air handler
Number of units	3-50% each	3-50% each	3-50% each	3-50%	3-50%
Flow rate (m^3/h)/unit	8,200	24,300	22,100	22,100	2,635
Fan:					
Type	Centrifugal	Centrifugal	Centrifugal	Centrifugal	Centrifugal
No. of fans per unit	1	1	1	1	1
No. of running fans	2	2	2	2	2
Heating coils:	None	None	None	None	None
No. of banks per unit	–	–	–	–	–
Capacity, each (MJ/h)	–	–	–	–	–
Cooling coils:					
Capacity, each (MJ/h)	154.07	454.69	417.84	417.84	48.99
Filters:					
Type	Medium eff	Medium eff	Medium eff	Medium eff	Medium eff
Capacity (m^3/h)	8,200	24,300	22,100	22,100	2,635
ASHRAE 52 eff.	85%	85%	85%	85%	85%

Table 9.4-5c Turbine Building and Electrical Building HVAC System—Non-Seafty-Related Equipment (Continued)

Item	Condenser Compt. Room Level 3 Recir. Unit TRV–F–19A thru C	TCW Pump Area Recirculation Unit TRV–F–20A thru C	Turbine Area Recirculation Unit TRV–F–21A thru C	Steam to Hot Water Heat Exchanger Area TBV–E–01A& 1B
Type	Central station air handler	Central station air handler	Central station air handler	Heat exchanger
Number of units	3-50% each	3-50% each	3-50%	2-100% each
Flow rate (m^3/h)/unit	23,800	11,900	28,900	
Fan:				
Type	Centrifugal	Centrifugal	Centrifugal	–
No. of fans per unit	1	1	1	–
No. of running fans	2	2	2	–
Heating coils:	None	None	None	–
No. of banks per unit	–	–	–	–
Capacity, each (MJ/h)	–	–	–	–
Cooling coils:				
Capacity, each (MJ/h)	444.22	221.48	542.19	–
Filters:				
Type	Medium eff	Medium eff	Medium eff	–
Capacity (m^3/h)	23,800	11,800	28,900	–
ASHRAE 52 eff.	85%	85%	85%	–
Heat Exchanger:				
Type				Shell and Tube
Capacity (MJ/h)				22,156.55

The following figures are located in Chapter 21:

Figure 9.4-1 Control Building HVAC PFD (Sheets 1-5)

Figure 9.4-2a Turbine Building HVAC System Air Flow Diagram

Figure 9.4-2b Turbine Building HVAC System Control Diagram (Sheets 1-2)

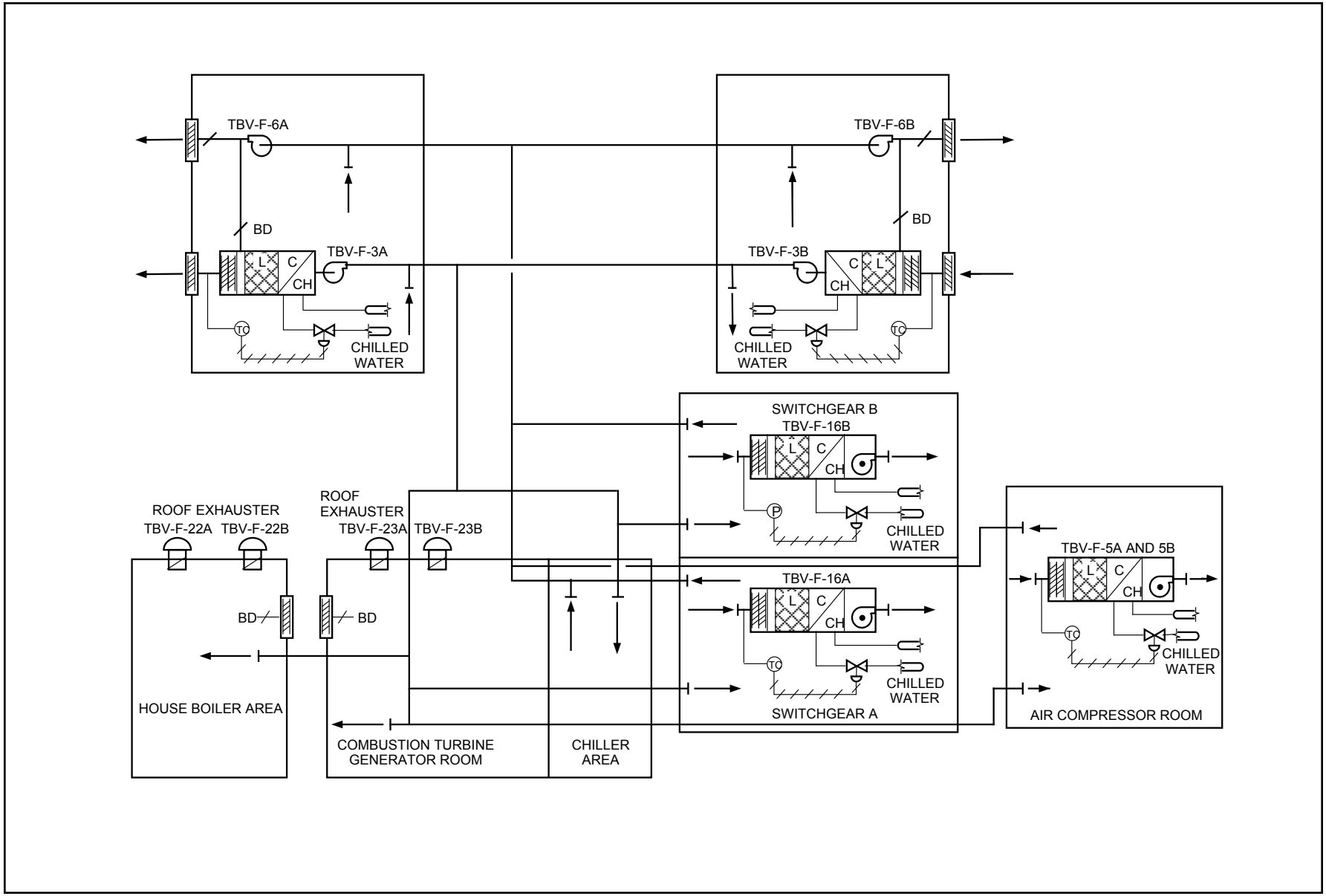

Figure 9.4-2c Electrical Building HVAC System Diagram

The following figures are located in Chapter 21:

Figure 9.4-3 Secondary Containment HVAC System (Sheets 1-3)

Figure 9.4-4 Safety-Related Electrical Equipment HVAC System (Sheets 1-3)

Figure 9.4-5 Reactor Internal Pump ASD HVAC System

Figure 9.4-6 Not Used

Figure 9.4-7 Not Used

Figure 9.4-8 Drywell Cooling System P&ID

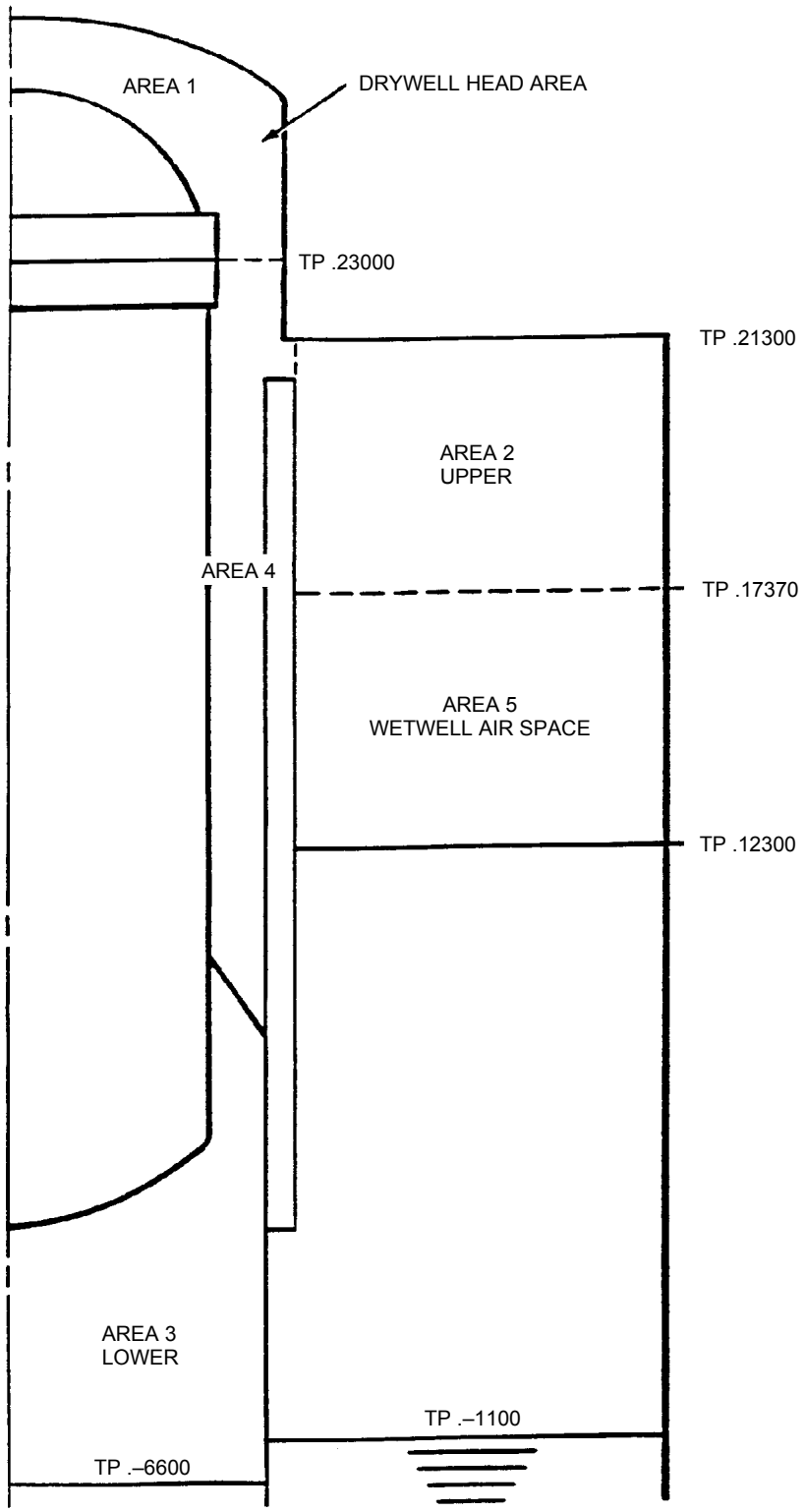

Figure 9.4-9 Drywell Heat Load Area Drawing

The following figure is located in Chapter 21:

Figure 9.4-10 Radwaste Building HVAC (Sheets 1-3)

9.5 Other Auxiliary Systems

9.5.1 Fire Protection System

See Subsection 9.5.13.9 for COL licence information pertaining to areas of the plant to be included in its fire protection program.

The ABWR Fire Protection Program follows the recommendations of BTP CMEB 9.5-1 except in the following cases:

(1) The capacity of each of the 3 Diesel Day Tanks is 12.1 m^3 (3200 gallons). This is enough fuel for 8 hours of operation of the diesel at the maximum LOCA load demand. The BTP recommends that the day tanks be limited to a capacity of 1100 gallons (BTP CMEB, Section 7j).

Justification: The day tanks are located in the reactor building outside secondary containment in a dedicated 3-hour fire rated compartment of masonry construction. There is no other safety-related equipment located in the day tank rooms. The day tank rooms are located in the Emergency Diesel Generator compartments and are positioned such that the 3-hour fire rated walls, ceiling, and floor of the day tank room are not shared by any other division. The day tank rooms are protected by a foam water sprinkler system that can deliver foam to the room for a minimum of 30 minutes without operator intervention.

The day tank is seismically designed and supported. In the unlikely event the day tank were to fail the entire contents of the day tank can be contained in the sunken volume of the room. Potential ignition sources inside the day tank rooms with enough energy to ignite diesel fuel are limited. Furthermore the supply of fresh air to support combustion is limited. In the event of a fire the pre-action automatic foam sprinkler system is designed to extinguish a fire in this room in 10 minutes. The sunken volume of this room can contain the day tank contents and 30 minutes worth of foam. The additional foam capacity beyond 10 minutes provides added assurance that a postulated fire will be extinguished. In the unlikely event the fire can not be extinguished the room can be closed off and the fire allowed to burn out on its own without spreading to other areas.

In the event that the fuel oil transfer line from the day tank to the emergency diesel generator (EDG) were to fail the sunken floor around the diesel can accommodate the contents of the day tank plus 10 minutes worth of foam applied by the automatic sprinkler. The automatic sprinkler system is designed to extinguish a fire in this room in 10 minutes. In the unlikely event the fire was not extinguished the room can be closed off and the fire allowed

to burn out on its own without spreading to other areas. Alternatively, if the fire brigade is required to fight the fire manually the elevated entries into the room can accommodate approximately 30 minutes of additional water/foam application from 2 hand held lines ($0.47m^3$/min per hose) before reaching the lowest door opening. The lowest door opening to these rooms are the exterior equipment doors which could be opened if fire fighting activities necessitate so that any overflow from the sump area of the room excess water, foam, or diesel fuel would spill outside the building and not spread to other parts of the reactor building. Therefore any overflow from the sump area of the room will not affect any safe shutdown equipment or equipment needed for support of safe shutdown equipment.

(2) The Control Room Complex has a raised floor with a subfloor area which is used for routing of cables from the Control Room cabinets, panels, and the divisional electrical rooms. Divisional separation of the subfloor cabling is maintained per the requirements of IEEE 384. The subfloor area will include fire detection capability. The subfloor area will not contain a fire suppression system as recommended by the BTP (BTP CMEB 9.5-1, Section 7b).

Justification: Fire Hazard Analysis section 9A.4.2.4.1, item 12 describes why the subfloor area is considered to be low risk fire area. In addition, the effectiveness of a permanently installed fire suppression system in the subfloor area is limited due to the small vertical space and the physical separation between the subfloor and the Control Room. Since the Control Room is continuously manned, manual fire suppression activities can be started quickly once it has been determined that there is a fire in the subfloor area. There are no transient combustibles stored in this area during normal activities to increase the severity of a possible fire. The characteristics of the subfloor cables are such that the probability of a fire ignition are very low and any fire that were to occur would be self-extinguishing or very slow to spread. Since fire resistant cables are required the amount of water needed to extinguish fire in the subfloor is relatively small. Any water that is introduced into the subfloor area can be removed by floor drains in the subfloor area or through the use of temporary portable sump pumps. Accumulation of water in the subfloor area is limited in depth to less than the raised floor and will not adversely effect water sensitive safety-related equipment which is installed above the floor. In the event that a fire in the Control Room were to require evacuation, the Division I and II Remote Shutdown Panels enable the operators to bring the plant to a safe shutdown.

(3) The office spaces contained in the Control Room Complex do not have automatic fire suppression systems installed. BTP CMEB 9.5-1, Section 7b recommends that these spaces have automatic suppression.

Justification: The Control Room Complex is continuously manned so that any fire will be quickly detected and manual suppression will be commenced without delay. The amount of combustibles is limited. Papers within the Complex are stored in file cabinets, book cases, or other storage locations except when in use.

Should manual fire fighting in the Control Room Complex be necessary, the accumulation and/or drainage of fire water will not affect the ability to safely shutdown the reactor. Using 2 hand held hoses at 0.57 m^3/m each (1.14 m^3/m total) the subfloor area in the Control Room will accommodate a minimum of 1 hour accumulation of water with no drainage without affecting safety-related equipment. If the fire water is assumed to transport immediately to the basement of the control building, the resulting accumulation of water will not affect safety-related equipment located in the basement. In either case the fire fighting activities will not prevent the reactor from being safely shutdown.

(4) Consoles and cabinets in the Control Room Complex do not have fire detectors installed inside them. BTP CMEB 9.5-1, Section 7b recommends that fire detectors be installed in these consoles and cabinets.

Justification: The Control Room Complex is continuously manned so that any fire will be quickly detected and manual suppression will be commenced without delay. The cabinets and consoles contain limited combustibles and are air cooled so that smoke from a cabinet fire will exhaust to the Control Room Complex. A fire in any single cabinet or console will not disable the capability to safely shut down the plant.

(5) The automatic sprinkler system in the emergency diesel generator room is installed to extinguish any fire in that room and does not replace restrictions on the positioning and direction of the application of the fire suppressant. BTP CMEB 9.5-1, Section 7b recommends that the sprinkler system be designed to permit the diesel generator to continue to run while the sprinkler system is operating.

Justification: The automatic sprinkler systems used in the emergency diesel generator rooms are designed to prevent the inadvertent actuation utilizing pre-action automatic sprinkler type. Actuation of these sprinklers requires the detection of a fire by infra-red and/or rate of heat detectors, and the opening of the fusible link sprinklers. Furthermore, each division has its own dedicated detection and actuation equipment for the control of the fire sprinklers in that divisional area. Two actuation signals are required to initiate the fire suppression system, the first of which will annunciate an alarm to alert the operator to any potential problems.

The ABWR design includes three independent and physically separated safety-related divisions, any of which is capable of bringing the plant to a safe shutdown in the event of a fire. For design purposes it is assumed that a fire anywhere in a division results in the immediate loss of function of all equipment associated with that division. Even with this conservative assumption, the two remaining independent safety-related divisions are available for full utilization by the operator.

9.5.1.1 Plant Features Enhancing Fire Tolerance

The basic layout of the plant and the choice of systems is such as to enhance the tolerance of the ABWR plant to fire. The systems are designed such that there are three independent safety-related divisions, any one of which is capable of providing safe shutdown of the reactor. In addition, there are non-safety-related systems such as the condensate and feedwater systems which can be used to achieve safe shutdown. The plant arrangement is such that points of possible common cause failure between these non-safety-related systems and the safety-related systems have been minimized.

Fire protection requirements beyond those for past designs were placed on future designs by Policy Issue SECY-89-013 (Reference 9.5-1). The Policy Issue requirements and the methods by which they have been met in the ABWR design are:

Requirement

"Therefore, the designers of standard plants have been informed that they must demonstrate that safe shutdown of their designs can be achieved, assuming that all equipment in any one fire area has been rendered inoperable by fire and that reentry to the fire area for repairs and for operator actions is not possible. The control room should be excluded from this approach, subject to the need for an independent alternate shutdown capability that is physically and electrically independent of the control room."

Compliance

Three divisions of safety-related safe shutdown equipment are provided. Each division has the capacity for safe shutdown of the plant. Exterior to the primary containment and the control room complex each division is separated from its two redundant counterparts by rated three hour fire barriers. The primary containment is inerted during operation, has the divisions separated as far as possible and does not contain anything other than check valves and piping which is required to operate for safe shutdown. A Remote Shutdown System provides safe shutdown capability which is independent physically and electrically from the control room.

Requirement
"Fire protection for redundant shutdown systems in the reactor containment building should ensure, to as great an extent as possible, that one shutdown division will be free of fire damage."

Compliance
The Fire Barrier System assures that two safe shutdown divisions will be free of fire damage.

Requirement
"Consideration should be given for safety-grade provisions for the fire protection systems to ensure that the remaining shutdown capabilities are protected."

Compliance
Fire protection piping systems, the failure of which could affect safe shutdown systems, are seismically designed. The fire barrier system for safety-related areas of buildings is Seismic Category I.

Requirement
"In addition, it should be demonstrated that smoke, hot gases, or the fire suppressant will not migrate into other fire areas to the extent that safe shutdown capabilities, including operator actions, could be adversely affected."

Compliance
The Fire Barrier System confines smoke, hot gases, fire suppressant to the division of the fire. The smoke control system maintains the areas for the two redundant divisions at a positive pressure with respect to the area of the division experiencing the fire. Any leakage through the fire barrier system is to the fire.

In order to meet the stated requirements, the design objectives have been to assure that independence of the redundant systems required or available for safe shutdown is not compromised by fire, the consequences of fire or the failure of fire protection equipment or systems. This design priority was met by implementing a coordinated overall design including fire considerations for the following plant features:

(1) Plant arrangement

(2) Divisional separation

(3) Fire containment system

(4) Combustible loading

(5) HVAC systems

(6) Smoke control system

(7) Spurious control actions

(8) Support systems

(9) Fire alarm system

(10) Fire suppression system

(11) Personnel access routes

(12) Manual fire suppression activities

The manner in which each of the above plant features is influenced by, and in turn affects the fire protection design considerations, is summarized as follows.

9.5.1.1.1 Plant Arrangement

The plant is laid out with the Control Building between the Reactor and Turbine Buildings so that power and control signals from the Reactor and Turbine Buildings enter the Control Building on opposite sides of the Control Building. There are no safety-related services provided from or through the Turbine Buildings. Occurrences in the Turbine Building which may disable the Turbine Building non-safety-related systems which are capable of providing safe shutdown do not disable Reactor Building safety-related equipment which provides safe shutdown. Interactions between reactor and turbine building systems are minimized.

Normal and alternate preferred power is supplied through the Turbine Building to the Reactor Building for the safety-related loads. These non-safety-related power sources are backed up by the safety-related diesel generators. The diesel generators are not affected by events in the Turbine Building. For this reason, events in the Turbine Building can only cause a transfer to the diesel generators for the safety-related reactor building loads.

Normal safe shutdown functions of feedwater supply and steam flow to the condenser are provided through the steam tunnel. Overpressure in the Reactor Building is vented to atmosphere by blowout panels in the walls of the reactor building operating floor. Therefore, failures in the reactor building which could possibly affect the RCIC, RHR, HPCF or MSIV Systems would not affect the normal shutdown systems in the steam tunnel or turbine building.

The buildings are laid out internally so that fire areas of like divisions are grouped together in block form as much as possible. This grouping is coordinated from building to building so that the divisional fire areas line up adjacent of each other at the interface

between the Reactor and Control Buildings. An arrangement of this fashion naturally groups piping, HVAC ducts and cable trays together in divisional arrangements and does not require routing of services of one division across space allotted to another division.

9.5.1.1.2 Divisional Separation

As stated above, there are three complete divisions of safety-related cooling systems. Any one division is capable of safe or emergency shutdown of the plant so that a division may be out for maintenance, a single random failure occurs and the remaining functional division would still be able to provide safe plant shutdown.

In general, systems are grouped together by safety division so that, with the exceptions of the primary containment, the control room and the remote shutdown room (when operating from the remote shutdown panels), there is only one division of safe shutdown equipment in a fire area. Complete burnout of any fire area without recovery will not prevent safe shutdown of the plant; therefore, complete burnout of a fire area is acceptable.

The separation exception in the primary containment is made because it is not practical to divide the primary containment into three fire areas. The design is deemed acceptable because:

(1) Primary containment is inerted during plant operation; therefore, a fire is not possible.

(2) Sprinkler coverage is provided by the Containment Spray System.

(3) Only check valves and ADS/SRV valves are required to operate within containment to provide safe shutdown. A fire could not prevent the operation of a check valve nor would it prevent a safety valve from being lifted on its spring by pressure. The high-pressure pumps are capable of providing sufficient head to lift the SRV valves against their spring settings so that a fire could not prevent injection of water to and relief of steam from the reactor vessel.

(4) In addition, maximum separation is maintained between the divisional equipment within primary containment.

All divisions are present in the control room and this cannot be avoided. It is the purpose of the remote shutdown panel to provide redundant control of the safe shutdown function from outside of the control room. The controls on the remote shutdown panel are hard wired to the field devices and power supplies. The signals between the remote shutdown panel and the control room are multiplexed over fiber

optic cables so that there are no power supply interactions between the control room and the remote shutdown panel.

During normal plant operation the remote shutdown room is divided into two rooms by a closed sliding fire door. A fire in one divisional section will not affect the other divisional section. When the operator puts the remote shutdown panel into operation, the sliding door is manually slid open so that there is one remote shutdown room with two divisional sections of panels.

There are areas where there is equipment from more than one safety division in a fire area. Each of these cases is examined on an individual basis to determine that the encroachment is required and that failure in the worst conceivable fashion is acceptable. This analysis is documented in Subsection 9A.5.5.

Electrical Divisions 1, 2 and 3 supplies, Reactor Building cooling water pumps and heat exchangers, emergency chillers and emergency HVAC systems are located in the Control Building. Since these systems are required for safe shutdown of the plant if the function of the control room is lost, they are separated from the control room complex and its HVAC System by rated fire barriers. A fire resulting in the loss of function of the control room will not affect the operation of the remote shutdown or remote shutdown support systems.

With the existing separation and the tolerance to spurious signals (Subsection 9.5.1.1.7) that the plant systems have, evaluation of the impact of fire on safe shutdown is greatly simplified. The specific location of a fire within a fire area, fire growth rate and intensity is unimportant as long as the integrated intensity of the fire remains within the capability of the three-hour fire barrier system.

9.5.1.1.3 Fire Containment System

The Fire Containment System is the structural system and appurtenances that work together to confine the direct effects of a fire to the fire area in which the fire originates. The Fire Containment System is required to contain a fire with a maximum severity as defined by the time-temperature curve defined in ASTM E119 for a fire with a duration of three hours. For this condition, the temperature in the room at the end of three hours would be 1052°C. The Fire Containment System is comprised of the following elements:

(1) Concrete fire barrier floors, ceilings and walls which must be at least six inches thick (Reference 9.5-2, Figure 7-8T, NFPA Handbook) if made from carbonate and siliceous aggregates. Other aggregates and thicknesses are acceptable if the type of construction has been tested and bears a UL (or equal) label for a three-hour rating.

(2) Fire barrier walls which are of the special construction described in Subsection 9A.3.6 or of other approved construction types bearing a UL (or equal) label for a three-hour rating.

(3) Fire doors, which are required to have a UL (or equal) label certifying that they have been tested for a three hour-rating per ASTM E152, including a hose stream test.

(4) Both ends of all electrical and piping penetrations between the divisions and between a division and a non-division should be qualified to the same standard and tested to ASTM E119.

(5) Not Used

(6) Fire dampers, which are required for any HVAC duct penetrating a fire barrier, must have a rating of three hours. The plant arrangement minimizes fire dampers.

(7) Columns and support beams, which are required to be of reinforced concrete construction or enclosed or coated to provide a three-hour rating if of steel construction.

(8) Backup of the fire barrier penetration seals by the HVAC Systems when the HVAC Systems are operating in the smoke removal mode. This backup feature is accomplished in the Reactor and Control Buildings by maintaining a positive static pressure for the redundant divisional fire areas with respect to the fire area with the fire. Leakage is into the fire impacted area under sufficient static pressure to confine smoke and heat to the fire area experiencing the fire, even if there is a major mechanical failure of the penetration seal.

(9) AC independent water addition (ACIWA) can be connected to the reactor building fire protection system header. Sufficient Fire Water pressure and flow should be available to perform the intended function. Refer to Subsection 5.4.7.1.1.10, AC-Independent Water Addition.

9.5.1.1.4 Combustible Loading

Allowable combustible loadings for the plant were established as follows (see Appendix 9B, Subsection 9B.2.3 for additional details):

(1) 1454 MJ/m^2 of room area, maximum allowable average exposed combustible loading without an automatic fire suppression system. This is termed the normal combustible loading limit (NCLL).

(2) 2908 MJ/m^2 of room area, maximum average allowable exposed combustible loading (cable insulation) for electrical equipment rooms. This is termed the electrical room combustible loading limit (ECLL). Transient combustible loadings other than minor amounts required for maintenance of the equipment in the electrical equipment rooms are not allowed.

(3) Not Used

(4) Not Used

(5) Not Used

(6) Transient combustibles such as lubricating oils and grease, cleaning solvent, etc. in small quantities and in approved containers are permitted.

(7) Transient combustibles such as bags of protective clothing are permitted within the constraints of items (1) and (2). If it can be shown by analysis or testing that flames from the burning transient combustibles will not likely impinge directly on cables within trays or risers, the contribution from the cable insulation need not be considered in calculating the total combustibles in the area with the transient combustible load.

Combustible loading due to cable insulation has been minimized by locating the power sources adjacent to the loads served and multiplexing the control signals to and from the control room. This has allowed the elimination of cable spreading rooms and most of the cables to and from the control room. Multiplexing is also used within the control room so that the cables between panels have been reduced to mostly power cables.

9.5.1.1.5 HVAC Systems

The HVAC Systems have been matched to the divisional areas which they serve. For example, there are three divisions of power supply outside of secondary containment in the Reactor Building. The divisions are in separate fire areas and each fire area is served by its corresponding division of the HVAC System. This same philosophy is carried into the Control Building, where there is a divisional HVAC System for each of the three divisions of core cooling systems and a fourth HVAC System for the control room complex which contains four divisions of control equipment.

Division 4 contains a battery as the source of power but there is not a Division 4 diesel generator. Division 4 loads are comprised of instrumentation and controls to provide two-out-of-four logic. Loss of Division 4 reverts the logic back to two-out-of-three, which is acceptable on a permanent basis from a safety standpoint. The main function served by the Division 4 control and logic is one of improving plant availability for power production. On this basis Division 4 is supplied cooling from Division 2 in both the reactor and control buildings.

A single non-safety-related HVAC System supplies normal cooling for secondary containment in the Reactor Building. Within the Reactor Building the system is branched into three separate systems with valves and fire dampers for each branch (Subsection 9.5.5). Required emergency cooling for safety-related systems is provided by room coolers on a divisional basis.

9.5.1.1.6 Smoke Control System

The smoke control system for the plant provides major features as follows:

(1) Venting of fire areas to prevent undue buildup of pressure due to a fire.

(2) Pressure control across the fire barriers to assure that any leakage is into the fire area experiencing the fire.

(3) Pressure control and purge air supply to prevent back-flow of smoke and hot gases when fire barrier doors are maintained open for access for manual fire suppression activities.

(4) Augmented and directed clean air supply to provide a clean air path to the fire for fire suppression personnel.

(5) Smoke control by fans and systems external to the fire area experiencing the fire.

(6) Removal of smoke and heat from the fire by exhaust fans and operating supply fans to provide clean, cool air.

(7) Manually reset position of fire dampers in the smoke removal path.

These features are provided by designing the HVAC Systems for the dual purpose of HVAC and smoke control. ASHRAE's "Design of Smoke Control Systems for Buildings" and NFPA's "Recommended Practice for Smoke Control Systems" (References 9.5-3 and 9.5-4) were used as the basis for the design of the smoke control features of the combined systems.

The normal operating modes of the HVAC Systems are shown in Figures 9.4-1 through 9.4-6. The pressure at the input of an air handling unit is held at atmospheric pressure by a ducted, direct supply from outside through a bag type filter.

The systems are designed so the division of the air flow to the rooms within an HVAC/fire area is determined by the supply and exhaust ducting and the adjustable volume dampers.

The HVAC Systems in the fire areas not experiencing a fire continue to operate in their normal fashion so that the pressure in the other fire areas remains at a positive value. This assures that air leakage through any openings in the fire barriers surrounding the fire is to the fire.

The magnitude of the differential pressure which must be maintaianed across a fire barrier to provide aedquate smoke control varies with the intensity of the fire and the room height. For this reason, it is a COL license information requirement (Subsection 9.5.13.10) the the required differential pressure value for each barrier be calculated during the detailed design phase, the HVAC Systems be designed to provide the required pressure, and that the capability be confirmed during pre-operational testing. Normally the differential pressure would not have to be more than about 6.4mm of water, and it most likely would be less.

Entry to a fire is gained from an adjacent fire area which by design is at a positive pressure with respect to the area experiencing the fire. The pressure differential is sufficient to provide adequate velocity through the open door to carry the combustion products back into the zone of the fire. The flow through the open door into the area of the fire and out the area of the fire's exhaust duct system is maintained by the positive

pressure of the non-fire area and by operation of smoke removal mode in the fire area. It gives the fire fighting squad a tenable environment from which to work.

There are fire dampers in the HVAC penetrations of building internal walls between safety-related fire areas.

Upon manual initiation of the smoke removal mode, the recirculation damper is closed, the exhaust fans are stopped, and the smoke removal fan is started in conjunction with the supply fan for 100% outside air purging. In the Control Building, the recirculation damper is closed and both the exhaust fans are operated in conjunction with the supply fan for smoke removal.

In order to maintain the objective of smoke and heat removal during a fire situation, the HVAC supply and exhaust duct openings in the exterior walls of the Reactor building do not have fire dampers. The walls are designated as three-hour fire barriers and would normally require fire dampers for HVAC duct penetrations. Fire dampers could close due to heat from an internal fire, however. Internal fires are a more serious threat to the plant than external fires.

Omission of the fire dampers in the supply ducts is deemed acceptable because:

(1) Each HVAC/fire area has a separate intake structure.

(2) The intake structures are dispersed around the perimeters of the buildings.

(3) Not Used

(4) Isolation valves are provided and could be manually closed should there be a challenge due to an external fire.

(5) Each intake serves one fire area and, therefore, one division only except for the control room. The two redundant divisions are in separate fire areas. The control room fire area is separate from all other fire areas and the safe shutdown function is backed up by the remote shutdown panel.

Omission of the fire dampers in the exhaust ducts is deemed acceptable because:

(1) Each HVAC/fire area has a separate exhaust.

(2) Flow is normally out of the building so that external combustion products would not be drawn into the building.

(3) Isolation valves are provided and could be manually closed if it becomes necessary to shut a HVAC System down during an external fire situation.

(4) The run of metal duct from the exhaust structure to the isolation valves will contain stagnant air which will protect the isolation valves from high temperatures due to external fires if the valves are closed. The isolation valves will have far less leakage than normal fire dampers. It is an interface requirement that the exhaust duct between the exhaust structure and the isolation valves be insulated for high temperatures.

The combination of these three things assures that the equivalent of a three-hour fire damper is provided.

(5) It is extremely important to be able to vent internal fires without interruption from a fire damper that has closed due to the temperature of the exhaust gases.

The HVAC/smoke control system for the Reactor Building secondary containment differs slightly from the other systems in the Reactor and Control Buildings, since because a common supply and exhaust system is used for all three divisional areas within secondary containment. The systems for each division are branched from the common system. A dual purpose isolation/fire damper valve is provided for each supply and exhaust branch. A two-position motor-operated volume damper is also provided in each exhaust branch. Upon detection of a fire, a normally non operating exhaust fan is started to increase the negative pressure of the exhaust system. The motor-operated dampers in the exhaust ducts for the divisional HVAC/fire areas without the fire reposition to their predetermined fire settings to maintain normal negative pressure in their zones. The pressure in the HVAC/fire area experiencing the fire moves negative with the change in exhaust pressure. This establishes a pressure differential to the adjacent fire areas to provide smoke control by the differential pressure across the fire barriers surrounding the fire.

See Subsection 9.4.4 for a description of the smoke control system for the Turbine Building.

9.5.1.1.7 Spurious Control Actions

As stated above, the systems are separated by fire areas on a divisional basis. The multiplexing system is a dual channel system. Two simultaneous, identical digitized control signals are required at the de-multiplexer for control action to be taken at the field device. The probability of two spurious signals matching is essentially zero.

The significance of the two-channel operation of the multiplex system is that, if the ability to operate from the control room is lost, equipment will continue to run until manually shutdown in the field by the operators. Equipment may also be manually started at the switchgear or motor control centers during a control room fire situation without fear that failures in the control room would cause the equipment to be shutdown. The feature of being able to start equipment locally without fear of it being shut down by spurious signals from the control room makes it possible to utilize non-safety-related systems such as the feedwater and condensate pumps in the Turbine Building as backups to the safety-related safe shutdown system, if desired.

The interlocks which prevent damage of equipment may be accomplished directly and by hard wiring in the field. For example, the protective relaying for the switchgear is located in the switchgear and the interlocks accomplished in switchgear. Signals for operational logic are multiplexed to the control room, but protective actions are not dependent on conditions in the control room.

Because of the nature of the design, there is no unacceptable failure that can occur due to fire induced failures within a division. This is independent of time or timing. This has been confirmed by the analysis performed as part of the plant evaluation for tolerance to sabotage. The sabotage analysis was done with no time constraints on actions precipitated within a division.

9.5.1.1.8 Support Systems

Support systems such as HVAC and Reactor Building Closed Cooling Water Systems are designated as safety-related if they support safety-related systems. They are given divisional assignments and separated by fire barriers in the same fashion as the safety-related primary systems.

9.5.1.1.9 Fire Alarm Systems

Fire alarm systems which control equipment which could affect the operation of safety-related systems are designated as safety-related. It is a requirement that fire alarm systems be zoned by division according to the divisional assignment of the area which each zone covers.

9.5.1.1.10 Fire Suppression System

Automatically initiated fire suppression systems are initiated on a divisional basis so that there are no interactions between divisions. In general, fixed automatic suppression is provided in areas where the allowable limits of combustible loading, for no fixed suppression, as defined in Subsection 9.5.1.1.4, are exceeded. See Table 9.5-5 for a complete listing of automatic fire suppression systems.

9.5.1.1.11 Personnel Access Routes

The personnel access routes for fire suppression activities have been reviewed to see that access compatible with the design of the fire barriers, HVAC and smoke control systems has been provided. A source of clean cool air is provided for access routes to fire areas. The air supply is by fans out of the fire area experiencing the fire.

9.5.1.1.12 Manual Fire Suppression Activities

The plant is designed such that the divisional area in which a fire is occurring will be apparent to the operators at the time the fire is discovered. If the fire is significant, the operator can transfer operations to one of the two unaffected divisions and shut down the equipment in the affected division. All power supplies in the affected division can be deenergized and manual fire suppression activities commenced immediately without fear of damaging equipment in either of the two remaining operating divisions. Since the ventilation fans within the divisional fire area experiencing the fire aid in smoke removal, they should not be shut down unless necessary.

9.5.1.2 Design Bases

The program's intent is to provide a "defense-in-depth" design resulting in an adequate balance in:

(1) Preventing fires from starting.

(2) Quickly detecting and extinguishing fires that occur, thus limiting fire damage.

(3) Designing safety-related systems so that a fire that starts in spite of the fire prevention program and burns out of control for a considerable length of time will not prevent safe shutdown.

In addition, fire protection systems are designed so that their inadvertent operation or the occurrence of a single failure in any of these systems will not prevent plant safe shutdown.

Possible fires that could affect safety-related systems and significant combustible loadings are presented in Appendix 9A on a room-by-room basis. Fire barriers and fire protection systems are discussed for each safety and non-safety-related area. Each room is also analyzed for its potential radioactive release due to a postulated fire. Noncombustible or smoke-evolved and fuel-contributed index of 25 or less are used wherever practicable.

SRP Acceptance Criterion II.2.a of SRP Section 9.5.1 requires adherence to BTP CMEB 9.5.1. Paragraph C.5.f of the SRP requires that the means by which smoke will be removed from the plant be established early in the plant design. The ABWR

meets this requirement, in that it is planned that smoke will be removed by normal HVAC System. In the Reactor Building, the normal supply and exhaust fans are located external to the building. Every room of the Reactor Building secondary containment receives supply air from and exhausts to the building normal HVAC. The emergency ventilation systems for the electrical equipment and diesel generator rooms provide additional smoke removal capability for those rooms.

There is a containment vent and supply system. Neither the supply or exhaust ducts are equipped with fire dampers. The isolation valves on these ducts are normally closed and would remain closed during plant operation so as to maintain the containment in an inerted condition. If a fire occurred in containment during a plant outage, when the valves were open and the containment not inerted, the drywell or wetwell spray would be initiated to protect the containment at a temperature well below the threshold of damage to the ventilation duct. For these reasons, the ABWR design for the containment ventilation is considered proper and adequate. (Further discussed in Subsection 9.5.1.3.12).

The water suppression systems are designed on the basis that, following a safe shutdown earthquake, there will be two manual hose streams available in any area containing equipment required for safe shutdown and that there will be no uncontrolled release of fire suppression water in the areas.

Transformers located within fire areas containing safety-related equipment will be of the drytype only. For those areas utilizing liquid insulated transformers, the COL applicant shall provide features to prevent the insulating liquid from becoming an unacceptable health hazard to employees in the event of release of the material to the building environment.

The quality assurance (QA) program, in accordance with CMEB 9.5.1 for the design of fire protection systems, is presented in Chapter 17.

The consequences of inadvertent operation of a suppression system and of moderate energy line cracks are discussed in Appendix 9A.

Except for fuel and lubricating oil located in the diesel-generator rooms, there are no storage areas in the Reactor or Control Buildings for flammable liquids, oxidizing agents, flammable compressed gases, corrosive material or explosive or highly flammable materials. Nonflammable compressed gases (e.g., air, nitrogen) do not represent a fire hazard.

Small quantities of chemicals may be stored in listed or approved cabinets and containers for immediate use. The CRD maintenance area is an example where such storage is permitted. Identification of the type and location of these materials is a requirement of SRP Section 13.2.2, which is the responsibility of the COL applicant.

9.5.1.3 System Descriptions

9.5.1.3.1 General Description

The Fire Protection System consists of:

(1) Standpipe

(2) Hose stations

(3) Sprinklers

(4) AFFF sprinkler systems

(5) Automatic foam sprinkling systems

(6) Smoke detectors

(7) Alarms

(8) Fire barriers

(9) Fire stops

(10) Portable fire extinguishers

(11) Portable breathing apparatus

(12) Smoke and heat ventilation systems

(13) Associated controls and appurtenances

The suppression systems for the buildings and the plant yard are shown in the following figures:

Area	Figures
Reactor Building	9A.4-1 thru 9A.4-10
Control Building	9A.4-11 thru 9A.4-16
Turbine Building	9A.4-17 thru 9A.4-21
Service Building	9A.4-22 thru 9A.4-27
Radwaste Building	9A.4-28 thru 9A.4-32
Plant Yard	9.5-5

9.5.1.3.2 Fire Suppression System Requirements

The two firewater supply system pumps provide 5678 L/min flow from each pump at a differential pressure of 863 kPa. This requirement will meet the needs of NFPA 13 wet standpipe flow demand of 1893 L/min at a residual pressure of 448.2 kPa at the most hydraulically remote hose connection in plant buildings. The standpipe and sprinkler system are designed to meet the requirements of NFPA 13 and 14. In addition, the sprinkler systems and the portions of the wet standpipe system within the Control and Reactor Buildings and one train of the fire suppression water supply system analyzed to remain functional following a safe shutdown earthquake. They are also designed to meet the requirements of ANSI B31.1, Power Piping. The remainder of the fire suppression systems are designed to the appropriate fire protection codes as listed.

An automatic foam sprinkling system is provided for the diesel generator and day tank rooms.

9.5.1.3.3 Codes and Standards

The following listed documents, codes, standards and guidelines are referred to in the Fire Protection System designs:

29CRD1910	Occupational Safety and Health Standards
29CRD1926	Safety and Health Regulations for Construction
10CFR50	Licensing of Production and Equipment
UL	Underwriters Laboratories Approved Equipment
FM	Factory Mutual Approved Materials and Equipment List
ANI	Basic Fire Protection for Nuclear Power Plants, March 1976
ANSI B31.1	Power Piping
ASTM D992-56	Classification of Flammability Standards
ASTM E84	Method of Test of Surface Burning Characteristics of Building Materials
NFPA 10	Portable Fire Extinguishers—Installation
NFPA 10A	Portable Fire Extinguishers—Maintenance and Use
NFPA 11	Foam Extinguishing System

NFPA 13	Sprinkler System
NFPA 14	Standpipe and Hose Systems
NFPA 15	Standard for Water Spray Fixed Systems
NFPA 16	Deluge Foam-Water Sprinkler Systems
NFPA 16A	Closed Head Foam-Water Sprinkler Systems
NFPA 20	Standard for the Installation of Centrifugal Fire Pumps
NFPA 24	Outside Protection
NFPA 26	Recommended Practice for the Supervision of Valves Controlling Water Supplies for Fire Protection
NFPA 37	Stationary Combustion Engines and Gas Turbines
NFPA 70	National Electric Code
NFPA 72	Protective Signaling Systems
NFPA 78	Lightning Protection
NFPA 80	Fire Doors and Windows
NFPA 80A	Protection from Exposure Fires
NFPA 90A	Air Conditioning and Ventilation Systems
NFPA 91	Blower and Exhaust Systems
NFPA92A	Smoke Control System
NFPA 101	Life Safety Code
NFPA 1963	Screw Threads and Gaskets for Fire Hose Connections
NFPA 1961	Fire Hose
NFPA 251	Fire Test, Building Construction and Materials
NFPA 252	Fire Tests of Door Assemblies
NFPA 255	Surface Burning Characteristics of Building Materials

NFPA 321	Classification of Flammable Liquids
NFPA 801	Facilities Handling Radioactive Materials
NFPA 802	Nuclear Reactors
NFPA 803	File Protection for Light Water Nuclear Power Plants.
NRC Regulatory Guide 1.39	Housekeeping Requirements for Water Cooled Nuclear Plants
BTP-CMEB 9.5-1 Appendix A	Guidelines for Fire Protection for Nuclear Power Plants
IEEE-384	IEEE Standard Criteria for Independence of Class 1E Equipment and Circuits

9.5.1.3.4 Protection of Operating Units

The protection of operating units during construction of additional units is out of the scope of the COL applicant.

9.5.1.3.5 General Description of Fire Protection System

The sprinkler systems in the Reactor Building and the wet standpipe systems in the Reactor and Control Buildings are designed in compliance with ANSI B31.1 and analyzed to remain functional following a safe shutdown earthquake. A portion of the water supply system, including a tank, a pump and part of the yard supply main, is designed to these requirements also. The remainder of the water systems are designed to the appropriate fire protection standards. During normal operation, the seismically designed and non-seismically designed systems are separated by normally closed valves and a check valve such that a break in the non-seismically analyzed portion of the system cannot impair the operation of the seismically designed portion of the system. See the system requirements drawings (Figures 9.5-4 and 9.5-5) for more detailed requirements and information for these systems.

The water supply system is required to be a fresh water system, filtered if necessary, to remove silt and debris. Two sources with a minimum capacity of 1140 m^3 for each source is provided. If the primary source is a volume limited supply such as a tank, a minimum of 456 m^3 must be passively reserved for use by the seismically designed portion of the suppression system. This reserve will supply two manual hose reels for two hours. The equivalent of one 100% capacity motor driven pump and one 100% capacity diesel driven pump shall be provided. The equivalent capacity of each type may be comprised of multiple pumps of that type. A diesel driven pump is in the train designed

to remain functional following the safe shutdown earthquake. A jockey pump to keep the system pressurized is provided.

The Turbine Building is provided with standpipes, hose reels and ABC portable extinguishers throughout the building. In addition, the following fire suppression systems provide primary fire suppression capability to the following areas:

(1) Automatic closed head sprinkler systems are provided in the open grating area of the three floors under the turbine.

(2) Deluge foam-water sprinkler systems are provided in the lube oil conditioning area and the lube oil reservoir area.

(3) A deluge sprinkler system is provided in the hydrogen seal oil unit area.

(4) A preaction sprinkler system is provided in the auxiliary boiler area.

The Turbine Building fire suppression systems receive water from the portion of the supply system which is not required to be seismically analyzed for safe shutdown earthquake. They comply with the appropriate fire protection standard listed in Subsection 9.5.1.3.3.

The main power, unit auxiliary and reserve transformers are provided with deluge water spray suppression systems. The systems are automatically actuated by flame or temperature detectors. An oil and water collection pit is provided beneath each transformer. Drains away from buildings and transformers are provided for each pit. Shadow type fire barrier walls are provided between adjacent transformers.

Alarm systems, both manual and automatic, are provided in all areas of the plant as passive systems. They alarm without controlling an extinguishing function.

9.5.1.3.6 Protection and Extinguishing Equipment for Safety-Related Equipment

Primary suppression coverage for all buildings is provided by wet standpipes and hose reels designed to meet the requirements of NFPA 14, “Standpipe, Hose Systems.” Water fog electrically safe nozzles are provided. Secondary coverage is provided by portable ABC extinguishers.

9.5.1.3.7 Design Features of Fire Detection and Suppression Systems

Fire detection for all areas, except the diesel-generator rooms, is provided by the ionization-type product of combustion (POC) systems reporting to satellite panels, which, in turn, report to the master panel located in the control equipment room of the Control Building. Trouble and alarm signals are retransmitted to the control room. POC systems are designed to NFPA 72 Class A and NFPA 70 Class 1 requirements. Class A provides that the detector function with an open wire or a short to ground. These

detection systems are not seismically qualified, as they are passive and have no control function.

The diesel-generator room fire detection systems utilize a cross-zoned combination rate of rise, rate-compensated heat detectors and infrared detectors to initiate an automatic foam sprinkler extinguishing system. This detection system is seismically qualified to protect against inadvertent actuation.

Fire detection and suppression alarm systems have four-hr battery packs located at each satellite panel and the control room panel and are also provided with power from an uninterruptible power supply.

Standpipe and hose reel systems are designed to meet the requirements of NFPA 14 and ANSI B31.1 (Power Piping Code). A 1.27 to 3.8 cm reducer is utilized on the 6.35 cm hose valve. The hose stations are equipped with 30.5-m neoprene-lined hose. Water fog electrically safe nozzles are supplied. The standpipe system is designed to remain functional following a safe shutdown earthquake. One train of the water supply system is designed to remain functional following a safe shutdown earthquake; therefore, an alternate water supply is not required.

Automatic wet pipe sprinkler systems piping is designed to meet the requirements of ANSI B31.1 and NFPA 13 (Sprinkler Systems). For pendant and upright sprinklers, the distance between the branch lines and between sprinklers on the branch lines does not exceed 3.7 m and the protection area per sprinkler does not exceed 12.1 m^2. For sidewall sprinklers, the distance between sprinklers does not exceed 3m and the protection area per sprinkler does not exceed 9.3 m^2. Water density is 6.1 lpm/m^2 of floor area.

Automatic foam extinguishing systems are designed to meet the requirements of NFPA 11 (Foam Extinguishing Systems). The allocation rate is a minimum of 6.51 lpm/m^2. The duration of foam discharge shall be a minimum of 10 minutes. Audible and visual alarms are provided.

Portable fire extinguishers are provided throughout the buildings. Extinguishers are Class ABC multipurpose, 20-A, 80-B:C UL rated.

Distance from a hose reel and extinguishers is no more than 31.5 m from any location and, in most cases, is much less. Manual fire alarm stations are provided for each hose reel. Hose reels are located to provide double coverage for most areas of the plant.

All devices and equipment are for a make and type listed or approved by UL or FM. Where required, seismically qualified equipment is specified in lieu of nonqualified, listed or approved equipment.

9.5.1.3.8 Smoke Control

Smoke, heat toxic gas removal systems are discussed in Sections 6.4, 9.4 and 9.5.1.1.6.

9.5.1.3.9 Fire Alarm System

The fire alarm system is passive and it does not control the suppression systems. The thermal and infrared cross-zoned detection system are utilized in the emergency diesel-generator rooms. The automatic sprinkler systems used in these rooms require two actuation signals to initiate the fire suppression system. The first actuation signal will annunciate an alarm to alert the operator to any potential problems. Fire detection and alarm systems are supplied with power from a non-Class 1E uninterruptible power supply.

Detection, utilizing the ionization product of combustion detectors, is provided in all areas of the plant. The detectors report to satellite panels, which, in turn, report to the main control room in the Control Building.

Detector location is selected to cover a maximum 46.5 m^2.

Standpipe water/foam, sprinkler water flow, and manual alarm devices are integrated into the general alarm system.

Horns, flashing or rotating lights and bells are provided to alarm personnel in the fire zone. Signals are unique and distinctive so as not be confused with other alarm systems.

9.5.1.3.10 Electrical Cable Fire Protection

Electrical cables are specified to meet the requirements of IEEE-383. Cable tray penetrations are designed to meet the fire-resistive ratings of the barriers they penetrate. Fire barriers and separation for electrical cable trays are discussed in Section 8.3.

9.5.1.3.11 Fire Separation for Safe Shutdown

The ABWR standard plant design systems, whose primary functions are to provide core cooling, to bring the plant to a safe shutdown condition, have three independent mechanical and electrical safety-related divisions (mechanical divisions A, B, C) and (electrical divisions 1, 2, 3). Each division is capable of bringing the plant to a safe shutdown condition whether the system is initiated manually or automatically. The plant layout and design is such that the redundant portions of safety-related systems are located in different fire areas; therefore, if one division becomes disabled due to a fire (complete burnout without recovery is acceptable), there are still two independent redundant divisions available to provide core cooling. The system initiation logic is located in the control room, and is made up of four divisional logic; but if one division becomes disabled (e.g., due to a fire), the system initiation logic reverts to two-out-of-

three logic. Safe shutdown following a fire is assured due to the fact the systems in any one of the three safety divisions are capable of accomplishing safe shutdown, and with the below listed exceptions, the safety divisions are separated by three-hour fire rated barriers.

(1) Main Control Room (MCR)

All four safety divisions of instrumentation and control are present in the main control room. Alternate safe shutdown capability is provided from the remote shutdown panel, which is located in a fire zone different from the MCR fire zone.

(2) Primary Containment

All four safety divisions are present in the primary containment. Primary containment is inerted during operation so that a fire in containment is not possible. In spite of this, separation within containment is maintained by as much distance as possible. Also, there is no combination of active components within containment which could fail due to a fire and prevent safe shutdown.

(3) Special Cases

There are some instances where equipment from more than one safety division is purposely mounted in the same fire area. For example, in order to provide redundancy for leak detection initiation, leak detection thermocouples for two or more divisions are mounted in the same room to control the single division of equipment contained in the room. The acceptability of each of these cases is analyzed and reported in Subsection 9A.5.

Even with these limited exceptions for separation by fire barriers, the plant design is such that complete burnout of a given fire area may occur and there will still be two divisions of functionally available equipment (including cables), either division of which is capable of accomplishing plant shutdown. Compliance of the design to this objective is confirmed by the Fire Hazard Analysis. Item 8 of the Fire Hazard Analysis of each individual room points out that, for each related or safe shutdown equipment located in the room, redundant safety-related equipment is available in a different fire area to accomplish the function of the equipment assumed to be involved in the fire or fire suppression activities. An item-by-item listing of this equipment is given in Table 9A.6-1. In addition, major safety-related equipment which may be used to accomplish safe shutdown is summarized in Table 9A.2-1.

Since the operator will always have two divisions of safe shutdown equipment available for use, he may use either the normal or emergency operating procedures as he sees fit

to safely shut the plant down. These procedures would probably lead him to use one of the multiple non-safety-related systems that would normally be available to him as the first choice for achieving safe shutdown, but no credit is taken in the analysis for the non-safety-related systems.

9.5.1.3.12 Shutdown Risk to Fire in Containment

During normal operation the containment is protected from fire by nitrogen inerting. When the plant is shutdown, the containment is de-inerted to permit access by plant personnel for maintenance activities. During these periods the following design features minimize the risk and adverse consequences if a fire in containment.

(1) The large volume of the containment allows for spatial separation of the redundant divisional components. The redundant equipment for core cooling is separated to as large a degree as practically possible.

(2) Once a flow path for RHR shutdown cooling is established a fire in the drywell will not result in the loss of the ability to remove decay heat from the reactor.

(3) Removal of decay heat from the reactor can still be achieved even in the highly unlikely that a fire disables all of the active components inside the containment through a combination of high head injection systems (HPCF) and SRVs) and the suppression pool cooling mode of RHR.

(4) The containment purge fans can be operated in a smoke removal mode to prevent the spread of smoke outside the containment.

(5) The materials used inside the containment are non-flammable or flame resistant where ever practical resulting in low combustible loading.

(6) The drywell spray system can be used as a sprinkler system to suppress a fire in the containment either by itself or in conjunction with manual fire fighting activities.

In addition to the design features of the ABWR the COL applicants's fire protection program will contain elements that minimize the risk of fire including control of transient combustibles, ignition source permits, and fire watches. The design features and administrative control programs ensure that a fire in the containment during shutdown will not result in a loss of the ability to keep the core cool.

9.5.1.4 Safety Evaluation (Fire Hazard Analysis—Appendix 9A)

The Fire Hazard Analysis is performed on a room-by-room, system-by-system basis and includes a set of drawings which reflect pertinent details of construction, location of rooms and location of fire suppression equipment (Appendix 9A).

Past practices in performing a Fire Hazard Analysis were based on evaluation of essentially complete plant designs. The ABWR design has not been completed to that level; therefore, the approach for the analysis was to review the system piping and instrument diagrams (P&IDs), and to prepare a database which listed every device that could be adversely affected by fire.

If the reviewers knew or became aware of something that would eventually be in the plant design but did not appear on any drawing at that time, it also was added to the list and assigned a special MPL number. This got the device into the database for tracking. If possible, each device was given an electrical safety division assignment and the assigned division was entered into the database.

If a device appeared on the building arrangement drawings, its actual location by row, column and elevation was entered into the database. For all other identified devices, an estimate of location by row, column and elevation, based on experience and the known location of nearby devices, was entered into the database. The validity of the location information for each item was indicated as being determined by reference to a drawing or by estimation.

The Fire Hazards Analysis was then performed on the verified or assumed plant design as documented by the database. This made it possible for a Fire Hazards Analysis to be performed on a specific plant configuration. It makes a record of the configuration analyzed available for use as a guide in completing the plant design. Also, at some time near the end of the design phase, the assumed information in the database may be compared to the actual design to confirm that the original Fire Hazard Analysis conclusions are still valid for final plant design. Any discrepancies may be analyzed and resolved at that time.

A compliance review will be conducted of the as-built design against the assumptions and requirements stated in the Fire Hazard Analysis as documented in Appendix 9B. This as-built reconciliation will include a comparison with Table 9A.6-1 (database) and Table 9A.5-2 (special cases). In addition, it will demonstrated that multiple high impedance faults of those circuits described in Table 9A.5-2 resulting from a fire within any one fire area will not negatively impact other equipment fed from the same power source. Any non-compliance shall be documented in a Fire Hazards Report as being required and acceptable on the basis of the Fire Hazard Analysis (Appendix 9A) and the Fire Protection Probabilistic Risk Assessment (Appendix 19M). The Fire Hazards Analyses (Appendix 9A) will be updated to include the as-built information. Any non-compliance must be documented as being required and acceptable.

The basis of the overall plant design with respect to the effects of fire is to assume that all functions are lost for equipment, including electrical cables, located within a fire area experiencing a fire. Redundant equipment is provided in other fire areas. A fire area by fire area treatment for the Fire Hazard Analysis evaluates the compliance of the

design to this requirement for redundancy. Compliance was confirmed or the need for corrective action was identified and initiated to achieve compliance to the overall plant design basis. Therefore, the most serious consequence of a fire is that it may incapacitate one safety or safe shutdown division. This is consistent with the single failure design criteria used throughout the plant. Regardless of the location of a fire, sufficient operable equipment is assured for use in safely shutting the plant down.

The Fire Hazard Analysis assumes that the function of a piece of equipment may be lost if the equipment is either involved in fire fighting activities or subjected to fire suppression agents and confirms that redundant equipment out of the fire area is available. This redundant equipment is capable of performing the required safety or shutdown function. The basis of the design is not to assume a questionable limit on damage within a given fire area but to provide redundant equipment elsewhere.

As described in Appendix 9A, the fire detection systems are Class A and, therefore, are tolerant of single failures. The fire suppression systems are designed such that there are two suppression systems available to any given area. Areas covered by sprinklers or foam systems are also covered by the manual hose system. Areas covered by manual hose systems only may be reached from at least two hose stations. Standpipes are fed from two directions.

9.5.1.5 Inspection and Testing Requirements

Preoperational inspection and testing requirements will be prepared for each fire protection system as described in Subsection 14.2.12.

9.5.1.6 Personnel Qualifications and Training

9.5.1.6.1 Fire Protection Engineer

The qualification requirements of the fire protection engineer are as follows:

(1) A graduate of an engineering curriculum of accepted standing.

(2) Shall have completed not less than eight years of engineering practice of progressive importance indicative of growth in engineering competency and achievement, three of which shall have been in responsible charge of fire protection engineering work.

(3) If not such a graduate, shall have completed not less than 12 years of engineering practice of progressive importance indicative of growth in engineering competency and achievement, three of which shall have been in responsible charge of fire protection engineering work.

9.5.1.6.2 Quality Assurance (QA) Program

Quality assurance policies and procedures are described in Chapter 17. They provide compliance with the criteria of 10CFR50 Appendix B. The program defines the requirements and controls for activities affecting quality of structures, systems and components to an extent consistent with their importance to safety.

9.5.1.6.3 Emergency Response Plan

Out of ABWR Standard Plant scope.

9.5.1.6.4 Administrative Controls

The description of administrative controls that will be established to govern various details of operations of the plant will conform to guidelines of BTP APCSB 9.5-1. However, a detailed review and acceptance of the administrative controls by the NRC will be performed during the plant-specific licensing. Items of interest under the administrative controls review will include but not be limited to:

(1) Control of combustible materials such as combustible/flammable liquids and gases, fire retardant treated wood, plastic materials, and dry ion exchange resins

(2) Transient combustible materials and general housekeeping, including health physics materials

(3) Open-flame and hot-work permits and cutting and welding operations

(4) Quality assurance with respect to fire protection systems components, installation, maintenance, and operation

(5) Qualification of fire protection engineering personnel, fire brigade members, and fire protection systems maintenance and testing personnel

(6) Instruction, training, and drills provided to fire brigade members

The COL applicant shall provide the description of these administrative controls to the NRC for review. See Subsection 9.5.13.18 for COL license information.

9.5.2 Communication Systems

The ABWR Standard Plant design provides a telephonic communication system consisting of a power-actuated paging facility and a separate network of cables and jacks to facilitate use of sound-powered telephones for maintenance, repair, and emergency conditions.

See Subsection 9.5.13.11 for COL applicant information pertaining to criteria for the design of the plant security system.

9.5.2.1 Design Bases

9.5.2.1.1 Power-Actuated Paging System

The paging system is designed to provide facilities for mutual communication and simultaneous broadcasting in the related buildings of the plant.

9.5.2.1.2 Sound-Powered Telephone System

The design basis for the sound-powered telephone system is to provide communication primarily for fuel transfer, testing, calibration, maintenance and emergency conditions.

9.5.2.2 Description

9.5.2.2.1 Paging Facilities

This system provides communication means such as mutual telephonic communication and simultaneous broadcasting in various select buildings and areas, including outdoor locations of a nuclear power plant unit. The system also permits merging with paging facilities of other units of the nuclear power station. The system is a fixed-type (as opposed to wireless communication) and primarily used for intraplant communications during plant operations, testing, calibration, startup and limited emergencies.

The paging system is a non-safety system and, therefore, does not have seismic mounting requirements. Mounting of system components is such that it will not cause damage to safety-related equipment.

The paging facilities consist of handsets, speakers, branch boxes, main distribution board, a control board, amplifiers, amplifier boards, 48V battery, battery chargers, DC distribution board, cables-wiring materials, junction boxes and jacks. The system is a 3-channel, 3-branch split type design with a separate set of amplifiers and a distribution board for each branch. A general outline of the system is shown in Figure 9.5-2.

Handsets and speakers are installed in places which are important for plant operation and necessary for personnel safety including the rooms described below:

(1) Main control room

(2) Electrical equipment room

(3) Fuel replacement area

(4) Turbine operation area

(5) Periphery of control rods hydraulic units

(6) Feedwater pump room

(7) Elevators

(8) Exteriors of plant buildings

Each handset station can be used to communicate with any other handset station within the unit or the central station of another unit at the same nuclear station.

One circuit of the handset station is connected to a telephone line, thereby permitting a simultaneous broadcasting from a security telephone unit.

The system is operated from a 48V battery source with a normal and a spare battery charger. The chargers are fed from 3ø, 480 VAC station power supply, and a separate 1ø, 120VAC power source is used for panel lights and convenience receptacles.

Due to its importance to plant operation and safety, the paging equipment will have an exclusive DC power supply with a dedicated battery. The battery has capacity for 10 hours of operation following the loss of AC power. The charger is sized to recharge the battery from a fully discharged condition in 10 hours while supplying the normal DC loads.

A handset is located at the same relative position on each floor, at a conspicuous location in the patrol route, at uniform intervals in corridors and large rooms, close to panels where possible and at a location least affected by radioactivity within one area.

Paging equipment for outdoor facilities is designed to automatically limit the sound volume at night to a level manually set from the operator's desk. The manual volume settings can be 10, 20, 30 or 40 dB.

The paging equipment produces an emergency signal (siren sound) upon actuation of an emergency signal pushbutton.

Speakers and handsets are installed at the best practical distance from noise sources. However, in rooms where noise level increases during equipment operation (such as feed water pump room, diesel generator room etc.), handsets are enclosed within a sound-proof booth.

The speakers are of two different types as described below. Their sound-to-noise (S/N) ratio is approximately 3 to 6 dB.

S = Output sound pressure of speaker.

N = Noise level at a place where the speaker is installed.

(1) Horn-shaped (Trumpet shaped): Output of 5 to 15W

(2) Cone-shaped (box-type): Output of 3W. Box-type speakers are installed in small rooms where reverberations make hearing difficult.

Junction boxes installed outdoors are made of stainless plate in accordance with the outdoor specifications. Junction boxes installed within the building are constructed to prevent water damage from above.

The interconnecting cables consist of a standard pair of conductors with cross-linked polyethylene insulation, a static electricity shield and an overall flame and heat-resistant sheath.

The circuits from the main paging equipment to each junction box are wired by separate routes. Wiring is routed in existing cable trays for control cables. Containment penetrations X-102 A and B are used for communication cables which are routed to the communication circuits within containment.

9.5.2.2.2 Sound-Powered Telephone System for Plant Maintenance and Repair

A separate communication system using portable sound-powered telephone units will be provided.

The communication facilities for use during plant maintenance and emergency conditions such as operation from RSS consists of local communication stations containing terminal jacks and boxes and a main patch panel with storage for patch cords. The patch panel is located outside the MCR. The portable sound-powered telephones themselves to be provided by the COL applicant. See Subsection 9.5.13.17 for COL license information.

The system provides communication capability between boards in the main control room, RSS and field station(s), or from field station to field stations.

An outline of the system is shown in Figure 9.5-2.

The communication between stations is by means of portable telephone units and patch cords at the main patch panel.

Terminal jacks are attached to the communication station at control panels and to local panels and racks where communication links are frequently required for testing, calibration, maintenance, and for operation from RSS.

The cable for the sound-powered communication facility is unshielded with a flame and heat resistant sheath and cross-linked polyethylene insulation. The cables are routed in existing control voltage level cable trays where available.

9.5.2.3 System Operation

The telephonic communication systems are designed to assist the plant personnel during preoperational, startup, testing, maintenance and emergency conditions. The system provides easily accessible means of communications between various intraplant locations and simultaneous broadcasting in those locations.

The various equipment involved in system operation is designed to function in the environment where it is located. The power supply for the paging system is derived from the dedicated batteries, thus providing a reliable source of power and the communication system for up to 10 hours in the event of a loss of plant power supply. The sound-powered telephone system does not require any electrical power source to operate the system.

9.5.2.4 Safety Evaluation

The communication system has no safety-related function as discussed in Section 3.2. However, see Subsection 9.5.13.2 for COL license information pertaining to use of the system in emergencies.

9.5.2.5 Inspection and testing Requirements

The communication systems are conventional and have a history of successful operation. Routine use of parts of the system during normal operation ensures availability. Measurements or tests required to guard against long-term deterioration shall be performed on a periodic basis. See Subsection 9.5.13.3 for COL license information pertaining to communication equipment maintenance and testing procedures.

9.5.2.6 Portable and Fixed Emergency Communication Systems

9.5.2.6.1 Design Basis

The design basis for the portable and fixed emergency voice communication systems is to provide communication facilities for normal and emergency plant operations and for plant security.

9.5.2.6.2 System Description

A fixed emergency communication system shall provide reliable communications between operating areas in the plant and to offsite locations. The system shall be independent of the other communication systems and shall include, but not be limited to commercial telephone, emergency alarms, and/or private branch exchange (PBX)

system. The system shall be compatible with the plant paging facilities (Subsection 9.5.2.2.1) such that it will permit a simultaneous broadcasting from a security telephone unit.

A portable communications system such as hand-held portable radio or equivalent shall be furnished independent of other communications systems, and be available for use by plant operations and security personnel during plant normal and emergency conditions.

Design of fixed emergency communication and portable communication systems shall comply with BTP CMEB 9.5.1, position C.5.g(3) and (4).

9.5.2.6.3 System Operation

The system operation is the same as listed in Subsection 9.5.2.3 except for the discussion on the power supply requirements. The design and power supply requirements for these systems shall be specified by the COL applicant.

9.5.2.6.4 Safety Evaluation

The system safety evaluation is same as listed in Subsection 9.5.2.4.

9.5.2.6.5 Inspection and Testing Requirements

The system inspection and testing requirements are same as listed in Subsection 9.5.2.5.

9.5.3 Lighting and Servicing Power Supply System

The plant lighting is comprised of four independent lighting systems: (1) normal AC lighting system, (2) standby AC lighting system, (3) emergency DC lighting system, and (4) guide lamp lighting system. The normal lighting system is non-Class 1E. The other three lighting systems are comprised of Class 1E (guide lamps only), associated, and Non-Class 1E subsystems.

All yard lighting (i.e., external to the buildings) except fixtures mounted on the buildings themselves are within the COL applicant's scope.

All lighting systems are designed to provide intensities consistent with the lighting needs of the areas in which they are located, and with their intended purpose. The lighting design considers the effects of glare and shadows on control panels, video display devices, and other equipment, and the mirror effects on glass and pools. Lighting and other equipment maintenance, in addition to the safety of personnel, plant equipment, and plant operation, is considered in the design. Areas containing flammable materials (e.g., battery rooms, fuel tanks) have explosion proof lighting systems. Areas subject to high moisture have water-proof installations (e.g., drywell, washdown areas). Plant AC lighting systems are generally of the fluorescent type, with

mercury lamps (or equivalent) provided for high ceiling, except where breakage could introduce mercury into the reactor coolant system. Incandescent lamps are used for DC lighting systems and above the reactor, fuel pools, and other areas where lamp breakage could introduce mercury into the reactor coolant.

Lighting systems and their distribution panels and cables are identified according to their essentiality and type. Associated and Class 1E lighting systems are located in Seismic Category I structures, and are electrically independent and physically separated in accordance with assigned divisions. Cables are routed in their respective divisional raceways. Normal lighting is separated from standby lighting. DC lighting cables are not routed with any other cables and are distinguished by "DCL" markings superimposed on the color markings at the same intervals.

Plant service buses supply power and heavy duty service outlets to equipment not generally used during normal plant power operation (e.g. Turbine Building and refueling floor cranes, welding equipment). Service outlets have grounded connections and the outlets in wet or moist areas are supplied from breakers with ground current detection.

9.5.3.1 Design Bases

9.5.3.1.1 General Design Bases

The general design bases for the Nuclear Island portion of the lighting systems are as follows:

(1) The lighting guidelines shall be based on Illuminating Engineering Society (IES) recommended intensities. These shall be inservice values as shown on Table 9.5-1, Illumination Levels. Reflected glare will be minimized.

(2) Control room lighting is designed with respect to reduction of glare and shadows on the control boards.

(3) Lighting systems and components are in conformity with the electrical standards of NFPA and OSHA as applicable for safety of personnel, plant and equipment. Light fixtures in safety areas are seismically supported, and are designed with appropriate grids or diffusers, such that broken material will be contained and will not become a hazard to personnel or safety equipment during or following a seismic event.

(4) Each of the normal, standby or emergency lighting systems has the following arrangement criteria:

(a) Areas without doors and hatches (where access is impossible) have no lighting.

(b) Rooms with normal (non-safety-related) lighting shall have on/off switches if the rooms are also used as passageways (e.g., patrol routes).

(c) For high radiation areas, the on/off switches and lamps shall be arranged to facilitate maintenance and to obtain maximum service life from the lamps.

(d) The switches shall be located at the entrance to the rooms, or the side of the passageway.

(e) Normal lighting power for the small rooms with on/off switches shall be supplied from one power bus.

NOTE: A small room means a room with three or less lighting fixtures, except for instrument rack rooms and electrical panel rooms.

(f) DC emergency lighting and associated lighting have no switch on their power supply lines.

(g) Standby lighting shall have no switch on power supply lines, as a rule. However, lighting for conference rooms etc., will have on/off switches.

(h) Power of inner panel lighting and outlets are supplied from one power bus.

(i) Each part of the 120V, 240V and 120/ 240V buses in lighting distribution panels shall have two or three spare circuits.

(j) Installation of fixtures on a high ceiling shall be avoided as far as possible to minimize lamp replacement work.

(k) The fixtures shall be located with due consideration of maintenance and inspection for the equipment in the rooms (such as tank rooms) where a well balanced arrangement is difficult.

(l) For mercury lamps, ballasts can be installed separately for life extension under the defined environment.

(m) The standard installation interval of service power supply boxes should be 45.7 - 61.0 m.

(n) The standard installation interval of outlets should be 15.2 - 30.5 m; however, outlets shall be arranged around instrument racks. The outlet installation level in hazard control areas shall be above the top of dikes.

(o) As a rule, normal lighting power shall be supplied with two power buses. However, a power supply with one power bus can be used for areas with high illumination lighting by standby lighting and in small rooms.

(p) Lighting shall be designed with due consideration of reflection on the CRT screens where CRTs are installed.

(q) Lighting fixtures in rooms with glass windows shall be arranged with due consideration of the mirror effect to keep the window clear.

(r) Power for staircase and passage lighting is from the standby system and shall be supplied from two power buses in the staircases and passages to prevent a total lighting loss. Each bus supplies power to 50% of the standby lighting of the passages and staircases. The two power buses for safety-related area passages and staircases shall consist of the following:

(i) One Class 1E bus (the same division as the safety-related equipment in the area), which is backed by its respective divisional diesel generator. A non-Class 1E bus, which is backed by the combustion turbine generator.

(ii) Under annual inspection of the power supplies, 50% lighting is secured with one lighting power bus. The 50% lighting level shall be sufficient for access and egress of personnel to and from the areas.

(5) Lighting fixtures shall be selected in accordance with the following criteria:

(a) Lighting fixtures inside the plant shall be the following type of fixtures:

(i) **Fluorescent lamps—**As a rule, fluorescent lamps shall be selected as fixtures for the general area.

(ii) **Mercury lamps—**Mercury lamps (or equivalent) shall be selected as fixtures for high ceiling areas (except in reactor building or other areas where lamp breakage could introduce mercury into the reactor coolant).

(iii) **Incandescent lamps—**Incandescent lamps shall be selected as fixtures for DC emergency lighting and as fixtures above the reactors and fuel pool in R/B operating floor.

(b) Standby lighting shall be the rapid start type.

(c) Incandescent lamps shall have waterproof guards inside drywell.

(d) The fixtures can be a general industry type; however, the fixtures for the part of service area in S/B and control rooms shall match the interior finish of the area.

(e) Lighting fixtures above operator consoles, benchboards and RW operator consoles shall be dark green embedded louver lighting to

reduce the reflection of fixtures on CRT screens. Illumination levels around the operator console and benchboards shall be adjustable.

(f) Non-Class 1E battery pack lamps shall be self contained units suitable for the environment in which they are located.

(g) The light fixtures for Class 1E battery packs may be located remote from the battery if the environment at the lamp is not within the qualified range of the battery. Alternatively, lamps powered from the station batteries may be provided.

(h) Outlets shall have grounded connections and should be 120V-15A type or 240V-15A type.

(i) Standard service power boxes shall be 3-phase 480V-100A type.

(j) Lighting around the reactor and fuel pool on the R/B operating floor shall be designed with due consideration of the reflection on the water surface to keep from impeding pool work. Lamps located where they may drop in the reactor or fuel pool, shall have guards.

(k) Outdoor lamps shall have automatic on/off switches.

(l) Associated lighting equipment shall be selected for the following areas. Wiring shall be an explosion-proof type.

  (i) Batch oil tank room such as turbine oil tank room and lubrication oil tank room
  (ii) EHC equipments room
  (iii) Battery rooms
  (iv) Diesel generator rooms
  (v) Day tank rooms
  (vi) Hydrogen related panels and seal oil equipment area

(m) Lighting inside the cask cleaning pit shall be an embedded waterproof type fixture

(n) Feeder circuits for the lighting fixtures and outlets in the following areas shall have circuit breakers with ground current detection:

  (i) Decontamination pans
  (ii) Decontamination rooms
  (iii) Inside drywell (outlets)
  (iv) R/B operating floor (service power supply boxes)
  (v) Service power supply boxes

(6) Fixture installation levels shall be as follows with consideration for the arrangement of trays, HVAC ducts and equipment lifting space:

Equipment	2.4m (from floor surface)
Distribution panels	2m to the top of the panels
Suspended fixture	2.4m to bottom of the fixtures
Wall mounted fixtures	2.4m to bottom of the fixtures

Detailed installation levels will be coordinated at the construction site.

(7) Wiring Criteria

(a) Wiring from power buses to distribution panels shall be done with conduit or cable trays. Wiring from the distribution panels shall be done with conduits.

(b) Normal non-Class 1E lighting power supply lines from the distribution panels with dual power bus configuration can share the same conduit.

(c) Standby lighting circuits shall not share raceways with normal lighting circuits.

(d) To enhance lighting reliability, emergency DC lighting circuits shall not share raceways with any other circuits.

(e) Physical identification of the safety-related equipment and cables is addressed in Subsection 8.3.1.3.

(8) Wires and Cables

(a) Wire size shall be 2.1mm, or larger as required.

(b) The size of the neutral line shall be the same as the branched circuits.

(9) Conduits

(a) Generally, embedded conduits shall be thick wall type, and exposed conduits may be thin wall type.

Exposed conduits in the drywell, the yard and the area where safety type fixtures or pressure resistant explosion-proof fixtures are required shall be thick wall type.

9.5.3.1.2 Safety-Related Design Bases

Nuclear safety-related design bases for ABWR Standard Plant lighting systems are as follows:

(1) Mercury vapor fixtures and mercury switches are not used where a broken fixture or switch may result in introduction of mercury into the reactor coolant system.

(2) Adequate lighting for any safety-related areas, such as areas used during emergencies or reactor safe shutdown, including those along the appropriate access or exit routes, are provided from three different lighting circuits (standby AC; emergency 125VDC, or self-contained battery fixtures).

See Table 9.5-2 for the lighting subsystems and their normal and backup power sources and the switching sequence. This table shows that the lighting is provided from normal AC power and standby AC power, and is backed up by emergency DC power during normal operation. On the loss of normal and standby AC power, the lighting is provided by emergency DC powered lighting facilities or self-contained battery fixtures.

9.5.3.2 System Description

Plant lighting is divided into four subsystems:

(1) Normal lighting (AC)

(2) Standby lighting (AC)

  (a) Associated

  (b) Non-Class 1E

(3) Emergency lighting (DC)

  (a) Associated

  (b) Non-Class 1E

(4) Guide lamps

  (a) Class 1E

  (b) Non-Class 1E

Lighting fixtures that contain mercury are not used inside the Reactor Building or in any other location where broken fixtures may introduce mercury into the reactor coolant system.

9.5.3.2.1 Normal (Non-Class 1E) Lighting

The normal lighting system is AC and non-Class 1E and provides up to 50% of the lighting needed for operation, inspection, and repairs during normal plant operation and is installed throughout the plant in non-safety-related equipment areas, except for the passageways and stairwells. Normal lighting is generally supplied from the non-safety-related power generation (PG) buses. In the non-safety-related equipment areas, the normal lighting is supplemented (a minimum of 50%) by the non-Class 1E lighting system. Lighting from a single load group is acceptable for localized high intensity lighting and lighting in small rooms where only a limited number of fixtures are needed. Non-Class 1E service outlets and internal lighting for panels is provided by the normal lighting system. In passageways and stairwells leading to non-safety-related equipment areas, the lighting is supplied from two different load groups of the non-Class 1E lighting system. With this configuration, non-safety-related equipment areas receive 100% of their lighting from two different power sources.

9.5.3.2.2 Standby Lighting

Standby lighting is provided for the operation and maintenance of equipment during the loss of normal power and is installed over the entire plant area. The AC lighting configuration permits retaining approximately 50% of the lighting illumination in all passageways, stairwells and safety-related equipment areas during lighting maintenance or loss of a load group. Illumination from 50% of the lighting is adequate to observe equipment and support personnel movement.

The standby lighting system is made of two subsystems: associated and non-Class 1E. The associated lighting subsystem serves the safety-related areas, and their associated passageways. The non-Class 1E lighting subsystem serves the non-safety-related areas and their associated passageways.

9.5.3.2.2.1 Associated Standby Lighting Subsystem (SSLS)

The associated AC Standby Lighting System is comprised of lighting from three Class 1E divisions. Each of the three Class 1E divisions is supplied power from the Class 1E divisional bus, which is connectable to the Class 1E standby power supply (emergency diesel generator (DG)) in its respective division. Each associated standby lighting system supplies a minimum of 50% of the lighting needs of the safety-related equipment areas in its respective division and of the passageways and stairwells leading to its respective equipment areas. The associated lighting in the battery room and other instrument and control areas of Division IV is supplied from the Division II associated standby lighting system. The main control room lighting is supplied from Division II and III associated standby lighting systems. The remainder of the lighting (up to 50%) in the safety-related equipment areas and the passageways and stairwells leading to them is supplied from the non-Class 1E standby lighting system in the same load group as the associated

lighting system. With this configuration, essential equipment areas receive 100% of their lighting needs from two different standby lighting power supplies.

The associated standby lighting subsystem is fed from Class 1E buses through separate lighting panels. Fixtures are provided for all safety-related areas, areas where Division 1, 2, 3, and 4 systems equipment is located, and their associated access areas. The fixtures provide a reduced lighting level adequate to support personnel movement and observation of equipment after interruption of the normal lighting system. In the event of a LOPP, the SSLS is automatically fed from the diesel generator sets.

The lighting circuits are associated. The lighting fixtures themselves are not seismically qualified, but are seismically supported. This is acceptable to the Class 1E power supply because of overcurrent protective device coordination. The bulbs cannot be seismically qualified. However, the bulbs can only fail open and therefore do not represent a hazard to the Class 1E power sources.

9.5.3.2.2.2 Non-Class 1E Standby Lighting Subsystems (NSLS)

The non-Class 1E AC Standby Lighting System (NSLS) is comprised of lighting from three non-Class 1E load groups. Each load group is supplied from a different plant investment protection (PIP) bus which is connectable to the non-Class 1E standby power supply (combustion turbine generator (CTG)). The NSLS supplies a minimum of 50% of the lighting needs of the non-safety-related equipment areas and 100% of the lighting in passageways and stairwells leading to non-safety-related equipment areas (as described above). In addition, the NSLS supplies up to 50% of the lighting needs in safety-related equipment areas and in passageways and stairwells leading to safety-related equipment areas. The remainder of the lighting (a minimum of 50%) in the safety-related equipment areas and in passageways and stairwells leading to them is supplied from the SSLS.

The NSLS is fed from non-Class 1E buses through separate lighting panels. Fixtures are provided for all non-safety-related areas (areas where non-divisional equipment is located), and their associated passageways. The fixtures provide a reduced lighting level adequate to support personnel movement and observation of equipment after interruption of the normal lighting system. In the event of a LOPP, the NSLS is automatically fed from the combustion turbine generator. The NSLS transformers and their associated panels are non-Class 1E and are routed in non-Class 1E raceways. The illumination levels and power sources are shown on Table 9.5-3.

9.5.3.2.3 DC Emergency Lighting

The DC Emergency Lighting System consists of two subsystems: associated and non-Class 1E. The associated subsystem serves the following safety-related areas:

- Main control room

- Safety-related electric equipment rooms
- Diesel generator areas and associated control rooms
- DC electric equipment rooms (battery rooms are included)
- Remote shutdown control rooms

The non-Class 1E subsystem serves the non-safety-related radwaste control room.

The DC Emergency Lighting System provides backup illumination for periods after the loss of preferred power, until the combustion turbine generator energizes the standby lighting system, as well as in the event of loss of all the AC lighting sources.

The illumination levels and power sources of the DC Emergency Lighting System is shown in Table 9.5-4.

9.5.3.2.3.1 Associated Emergency Lighting Subsystem (SELS)

The Associated Emergency Lighting System (SELS) provides the emergency lighting needs to the main control room, the remote shutdown panel room, the emergency diesel generator areas and control rooms, and the safety-related electrical equipment rooms (both AC and DC). Lighting power for the identified safety-related areas is supplied from the 125 VDC battery in the same divisions as the area. The lighting power to the main control room is supplied from Divisions 2 and 3 125 VDC batteries.

The power for the DC emergency lighting subsystem is fed from the Class 1E station DC power supply system through Class 1E distribution panels for the above safety-related areas. Fixtures are provided for all safety-related areas. The circuits are treated as Class 1E. The SELS circuits up to the lighting fixture are classified as associated and are routed in Seismic Category I raceways. This is acceptable to the Class 1E power supply because of overcurrent protective device coordination. The bulbs are not seismically qualified. However, the bulbs can only fail open and therefore do not represent a hazard to the Class 1E power sources.

9.5.3.2.3.2 Non-Class 1E Emergency Lighting Subsystem (NELS)

The Non-Class 1E Emergency Lighting System (NELS) provides the emergency lighting needs to the Radwaste Building (RW/B) control room, the combustion turbine generator (CTG) area and control room, and the non-safety-related electrical equipment areas (both AC and DC). Lighting power for the RW/B control room is supplied from a Non-Class 1E battery. Lighting power for the non-safety-related electrical equipment rooms is supplied from the 125 VDC battery in the same non-safety-related load group as the equipment in the room. Lighting power for the non-Class 1E CTG is supplied from one of the non-Class 1E 125 VDC batteries.

The power for the NELS is fed from the non-Class 1E station DC power supply system through the non-Class 1E distribution panel for the radwaste control room. The lighting panel and wiring are non-Class 1E and non-seismic. The circuits are classified as non-Class 1E and are routed in non-seismic raceways.

9.5.3.2.4 Guide Lamps With Self-Contained Battery Packs

DC emergency guide lamp lighting fixtures are installed for stairways, exit routes and major control areas such as the main control room and remote shutdown panel areas. Each of the emergency lighting fixtures has two incandescent sealed-beam lamps, with an 8-hr minimum self-contained battery charger and an initiating switch which energizes the fixture from the battery in the event of loss of the AC power supply, and de-energizes the fixture upon return of AC power to the standby light, following a time delay of 15 minutes (Table 9.5-2). The power supply AC source is fed from the standby lighting system in the same area. The passageways are illuminated to a level of 1 foot candle on the floor per the Life Safety Code.

The self-contained emergency lighting sets are Class 1E qualified in safety-related areas. Class 1E equipment is classified as Seismic Category I.

9.5.3.2.5 Emergency Operation Failure Analysis

Because of the redundancy provided by the systems described above, the complete loss of lighting in any of the critical areas is not credible. The standby lighting system on loss of the normal lighting system and the emergency lighting systems provide totally independent low level illumination in areas vital to safe shutdown of the reactor and evacuation or access by personnel should the need occur. This is specifically demonstrated by Tables 9.5-1 and 9.5-2. Also, the safety-related control systems will automatically bring the plant to safe shutdown if lighting is not available.

9.5.3.3 Inspection and Testing Requirements

Since the normal standby and emergency lighting circuits are energized and maintained continuously, they require no periodic testing. However, periodic inspection and bulb replacement will be performed (Subsection 8.3.4.2.5). The guide lamps are capable of being tested and will be inspected and tested periodically to ensure operability of lights and switching circuits.

9.5.4 Diesel-Generator Fuel Oil Storage and Transfer System

9.5.4.1 Design Bases

9.5.4.1.1 Safety Design Bases

(1) Each engine is supplied by a separate safety-related diesel-generator fuel oil storage and transfer system. All fuel oil transfer equipment is designed,

fabricated and qualified to Seismic Category I requirements. Failure of any one component could result in loss of fuel supply to only one diesel-generator.

(2) Minimum onsite storage capacity of the system is sufficient for operating each diesel-generator for a minimum of seven days while supplying post-LOCA maximum load demands.

(3) Design and construction of the diesel-generator fuel oil storage and transfer system and the connection for the diesel generator system piping from the day tank up to the first connection on the engine skid conforms to the IEEE Criteria for Class 1E Power Systems for Nuclear Power Generating Stations (IEEE-308); and ASME Code, Section III, Class 3, Quality Group C. Miscellaneous equipment conforms to applicable standards of NEMA, DEMA, ASTM, IEEE, ANSI, API, NFPA. ANSI Standard N195 “Fuel Oil Systems for Standby Diesel Generators” is applied.

(4) The diesel-generator fuel oil storage and transfer system is of Seismic Category I design. In addition, the storage tanks are separately located underground and are protected from damage by flying missiles carried by tornados and hurricanes, from external floods, and other environmental factors. The fill connection is located at grade elevation. The vent and sample connection are located a little above the grade elevation. The fill and sample lines are capped and locked to prevent entry of moisture. Each vent is of fireproof goose-necked line with fine mesh screen to prevent access of debris.

Damage to these lines would have no adverse safety consequences, since they are not part of the fuel path from the storage tank to the diesel. In addition, each diesel has its own day tank, which is located inside the Reactor Building. This provides another level of protected fuel supply for each diesel generator. Also, there are three independent diesel-generator systems. Missile damage of such lines for more than one division is highly unlikely because each division is located in separated areas of the plant.

(5) System components are selected to be corrosion resistant.

(6) System design also considers positive protection from damage caused by turbine missiles.

9.5.4.1.2 Power Generation Design Bases

The diesel-generator systems are standby power supply systems. The diesel fuel oil storage and transfer systems are capable of supporting the instant start requirements of the diesel-generators.

9.5.4.2 System Description

Although specific suppliers may differ in the final design, a typical P&ID is provided as Figure 9.5-6. See Subsection 9.5.13.5 for COL license information.

There are three diesel-generators (DG-A, DG-B and DG-C), each one housed in its separate, respective divisional area within the Reactor Building. The units are identical and are held in reserve to furnish standby AC power in case of an emergency.

The Diesel-Generators DG-A and DG-C are located on one side of the Reactor Building, but are separated from each other. The diesel-generator DG-B is located in the opposite side of the Reactor Building.

Electrical and mechanical components of the fuel oil storage and transfer system in the Reactor Building are located in their respective divisional areas.

The diesel-generator fuel oil storage and transfer system for each engine consists of a yard 7-day storage tank, a fuel oil day tank, fuel oil transfer pump, suction strainer, duplex filter, instrumentation and controls, and the necessary interconnecting pipe and fittings. A bleed line returns excess fuel oil from the day tank for recirculation to the yard storage tank. Day tank elevation is such that the engine fuel oil pump operates with flooded suction. The bottom of the day tank will never be lower than the pump suction centerline.

Each diesel-generator set has its own day tank, which holds a capacity of fuel oil sufficient to operate its corresponding diesel-generator set for a minimum of eight hours while supplying its maximum LOCA load demand. Fuel oil is supplied by transfer pumps to each day tank from the yard storage system.

The diesel-generator fuel oil storage and transfer system is capable of transferring fuel oil from the storage tank to the day tank at a rate which exceeds the engine consumption rate while supplying its post-accident load requirements. Fuel oil transfer will not degrade diesel-generator operation.

Electrical power requirements for the fuel transfer system components is provided from the Class 1E electrical system in the same safety-related division.

A set of transfer pumps may be operated with manual control switches from the main control room and locally. However, they are normally operated automatically by level switches on the day tanks. A “low” level switch starts the first transfer pump, a “low-low” level switch starts the standby transfer pump and a “high” level switch stops both pumps.

Capability analyses will be performed in accordance with acceptable industry practice to assure the seven day and eight hour storage and day tank capacities, respectively.

An engine-driven fuel oil pump increases the fuel pressure to the diesel engine fuel manifold. Fuel oil transfer system piping is ASME Code Section III, Class 3, Seismic Category I. A motor driven fuel oil booster pump is also provided for priming purpose, and for added reliability.

9.5.4.3 Safety Evaluation

The overall diesel-generator fuel oil storage and transfer system is designed so that failure of any one component may result in the loss of fuel supply to only one diesel-generator. The loss of one diesel-generator does not preclude adequate core cooling under accident conditions.

Day tank fuel oil feed to the fuel pump is by gravity. There are no powered components to fail. A duplex suction strainer prevents foreign matter from entering the pump and causing malfunction. The system is safety-related and all piping and components up to the engine skid connection are designed and constructed in accordance with the ASME Code Section III, Class 3, and Seismic Category I requirements.

The diesel-generator fuel oil storage and transfer system is designed to withstand the adverse loadings imposed by earthquakes, tornadoes and winds. Earthquake protection is provided by the Seismic Category I construction. Tornado and wind protection is provided by locating system components either underground or within the reactor building. All underground piping is covered with protective coating and wrapping to guard against corrosion. The Seismic Category I portions of diesel-generator fuel oil piping will be routed in tunnels between the storage tanks and the Reactor Building. The system will be provided with a protection against external and internal corrosion. The buried portion of the tanks and piping will be provided with waterproof protective coating and an impressed current-type cathodic protection, to control the external corrosion of underground piping system. The impressed current-type cathodic protection system will be designed to prevent the ignition of combustible vapors or fuel oil present in the fuel oil system, in accordance with Regulatory Guide 1.137, Paragraph C.1.g.

All storage and day tanks are located at a sufficient distance away from the plant control room to preclude any danger to control room personnel or equipment resulting from an oil tank explosion and/or fire. The fuel oil day tank is located in a separate room with 3-hr fire rated concrete walls. The quality of the fuel oil used for diesel engine will be ensured per Appendix B, of ANSI N195. The fuel oil stored will meet the requirements of the ASTM D975 “standard specification for diesel fuel oils” and the requirements of the diesel engine manufacturer. Fuel oil not meeting these requirements will be replaced within a one-week period.

9.5.4.4 Tests and Inspections

The diesel-generator fuel oil storage and transfer system is designed in accordance with Regulatory Guide 1.137, and to permit periodic testing and inspection. (See Responses 430.274 through 430.276 in Subsection 20.3.16.)

Diesel-generator fuel oil storage and transfer system operability is demonstrated during the regularly scheduled operational tests of the diesel generators (test frequency is given in Chapter 16). Periodic testing of instruments, controls, sensors and alarms is necessary to assure reliable operation.

ASTM standard fuel sample tests are conducted at regular intervals to ensure compliance with fuel composition limits recommended by the diesel engine manufacturer. The "Standard Specification for Diesel Fuel Oils ANSI/ASTM D975" is the governing specification.

Fuel oil may be stored a minimum of six months without deterioration.

Each fuel oil storage tank will be emptied and accumulated sediments be removed every 10 years to perform the ASME Section XI, Article IWD-2000 examination requirements.

In accordance with Regulatory Guide 1.137, periodic surveillance of cathodic protection for underground piping system will be provided, not to exceed a 12-month interval, to make sure that adequate protection exists. At intervals not exceeding 2 months, each of the cathodic protection rectifiers shall be inspected.

New fuel oil will be tested for specific gravity, cloud point and viscosity and visually inspected for appearance prior to addition to ensure that the limits of ASTM D975 are not exceeded. Analysis of other properties of the fuel oil will be completed within two weeks of the fuel transfer.

9.5.4.5 Instrumentation Application

Fuel supply level in the storage and day tanks is indicated both locally and in the main control room. Also, alarms on the local diesel-generator panel annunciate low level and high level in the day tanks. The setting of the low level alarm shall provide fuel at least 60 minutes of DG operation at 100% load with 10% margin between the alarm and the suction line inlet. A group repeat trouble alarm is also provided in the main control room. Level switches in the day tank signal automatic start and stop of the fuel oil transfer pump.

9.5.5 Diesel-Generator Jacket Cooling Water System

9.5.5.1 Design Bases

All essential components of the diesel-generator cooling water system shall be qualified to Seismic Category I requirements and to 10CFR50 Appendix B. All engine-skid mounted pumps, valves, tanks, piping and heat exchangers shall be designed in accordance with ASME Code, Section III, Class 3, Quality Group C. Failure of the cooling system in any one engine shall not affect the readiness or operability of any other engine. Each cooling system rejects its heat to the Reactor Building Cooling Water (RCW) System of the corresponding division. Diesel-generators DG-A, DG-B and DG-C are located in Seismic Category I structures, protected from tornado-generated missiles and flood waters. The jacket water cooling system shall be able to operate at full load for seven days without any makeup.

The diesel engine shall be capable of operating for two minutes without secondary cooling to ensure that the engine can operate at full load in excess of the time required to restore cooling water (RCW and RSW), which are sequenced onto the Class 1E power supply within one minute following a loss of preferred power (see Table 8.3-4).

9.5.5.2 System Description

Although specific suppliers may differ in the final design, a typical P&ID is provided as Figure 9.5-7.(See Subsection 9.5.13.6 for COL license information).

Each diesel-generator unit is supplied with a complete closed loop cooling system mounted integrally with the engine generator package. Included in each cooling package are a jacket water heater and keep-warm pump, temperature-regulating valve, lube oil cooler, motor and/or engine-driven jacket water pumps, jacketed manifold and a jacket water cooler, which is furnished with RCW from the essential portion of the system. RCW supply is from the same division as that of the diesel generator served.

The jacket cooling water passes through a three-way temperature control valve which modulates the flow of water through or around the jacket water heat exchangers (coolers), as necessary, to maintain required water temperature. Jacket water cools the turbocharger, the governor, the air cooler, the exhaust manifold and the lube oil cooler. The three-way valve, whose service is crucial, is designed and qualified as stated in Subsection 9.5.5.1.

An electric heater is installed in each system for the purpose of keeping the engine jacket water at a temperature near the normal operating level during plant normal operation. The heater water is circulated (via the keep-warm pump) through the engine to assure temperature uniformity in the engine while in standby. Two jacket water circulating pumps are provided to circulate the cooling water through the system

during diesel-generator operation. During the standby mode, the jacket water temperature is maintained at 48.9°C based on 15.6°C normal ambient temperature.

The system is vented by an expansion tank vent line. The physical mounting of the piping and pumps is lower than the tank elevation; thus a static head will keep the pumps and piping filled with water.

To prevent long-term deterioration of the system internal surfaces, the system is filled with high quality treated water from the Makeup Water Purified System. The RCW side of the system is designed with the appropriate corrosion allowances of piping, and a fouling factor of 0.002 for heat exchanger tubes. A long interval periodic cleaning of the heat exchanger tubes may be necessary to restore the heat transfer capacity of the system in case of excessive fouling rates.

The RCW System for the DG jacket cooling water system is designed for a total heat removal rate based on the maximum permissible overload output of each diesel generator. Prudent margins are incorporated into the design to assure reliable system operation. See Subsection 9.5.13.6 for COL license information pertaining to cooling water system flow and heat removal requirements.

9.5.5.3 Safety Evaluation

Each diesel-generator cooling water system is independent. Failure of the diesel-generator cooling water system does not affect the other diesel-generator cooling systems or their diesel-generators. The engine jacket cooling water heat exchanger is furnished in accordance with ASME Boiler and Pressure Vessel Code, Section III, Class 3. Components of the diesel-generator cooling water systems are designed to Seismic Category I requirements. Procurement of components is governed by the requirements of 10CFR50 Appendix B to ensure quality assurance in all places of manufacture and installation.

9.5.5.4 Tests and Inspection

To ensure the availability of the diesel-generator cooling water system, scheduled inspection and testing of the equipment is performed in accordance with Regulatory Guide 1.108, as part of the overall engine performance checks. Instrumentation is provided to monitor cooling water temperatures, pressure and head tank level. Instruments receive periodic calibration and inspection to verify their accuracy. During standby periods, the keep-warm feature of the engine water jacket cooling closed-loop system is checked at scheduled intervals to ensure that the water jackets are warm. This system facilitates quick starting of the engine; however, the engines are required to be capable of a cold start in 20 seconds. The cooling water in the engine water jacket cooling closed-loop system is analyzed at regular intervals and is treated, as necessary, to maintain the desired quality.

9.5.5.5 Instrument Application

Pressure, temperature and level instrumentation is provided for monitoring of important system operating parameters. Alarms provide warning in case of system low or high water temperature, low pressure, or low water inventory. Except for post-LOCA operation, the diesel generators will trip on high-high cooling water temperature. See Subsection 8.3.1.1.8.5 for complete alarms.

9.5.6 Diesel-Generator Starting Air System

9.5.6.1 Design Bases

The Diesel-Generator Starting Air System provides a supply of compressed air for starting the emergency generator diesel engines without external power. In order to meet the single-failure criterion, each diesel-generator set is provided with two complete, redundant starting air systems. Each starting air system has enough air storage capacity for five consecutive starts of the engine, and performs its starting function in such a way that the time interval between signal to start and “ready to load” status will not exceed 20 sec. The air storage tanks, valves and piping between tank and up to first connection on the engine skid are designed to Seismic Category I requirements, and in accordance with the ASME Boiler and Pressure Vessel Code, Section III, Class 3. The system is located in a Seismic Category I structure, protected against tornado, external missiles and flood waters.

9.5.6.2 System Description

Although specific suppliers may differ in the final design, a typical P&ID is provided as Figure 9.5-8 (see Subsection 9.5.13.5 for COL license information).

The diesel-generator starting air system provides a separate and independent starting facility for each of the diesel-generating units. Each facility includes two 100% capacity sections, each section consisting of an air compressor, after cooler, air dryer and air receiver. Two redundant starting air admission valves in each of two engine starting air manifolds are provided for each engine. Failure of an one starting system in no way affects the ability of any other system to perform its required safety-related function. Normally, the compressors are fully automatic in operation, controlled by pressure switches located on their respective air receivers. The pressure switches signal the start and stop of the compressors, as necessary to maintain the required system pressure. Manual override of the automatic sequence is provided for emergency situations.

To avoid depleting air start capability, following unsuccessful automatic starting of the diesel generator with and without AC external power, each diesel generator’s air receiver tanks will have sufficient air remaining for three more successful starts without recharging (i.e., a total of five starts). Each motor-driven compressor has sufficient capacity to recharge the storage system in 30 min, after five starts of the diesel engine.

The compressors are electric motor-driven, and receive power from the Class 1E bus within the same division.

Each air receiver is also provided with a blowdown connection. A connection at the receiver bottom will be used to blow down any water accumulated in the tank. The starting air admission valves are operated by solenoids supplied with uninterruptible DC power from 125 VDC. Solenoids and power feeds are in the same division.

The diesel-generator air start system is provided with an air dryer to ensure clean dry air to engine starting. The dryer will be capable of controlling the dew point as recommended by the diesel engine manufacturer. The dryer will be equipped with pre- and after-filters to remove oil, waste, dust and any pipe scale from the air stream. (See Response 430.285 in Subsection 20.3.16.)

9.5.6.3 Safety Evaluation

The standby diesel-generator starting air system air compressors and tanks are designed in accordance with the requirements of Section III of the ASME Boiler and Pressure Vessel Code. The system is classified Safety Class 3 and Seismic Category I. Starting air facilities for each of the diesel engines are completely redundant, with each redundant section capable of supplying enough air for a minimum of five normal engine starts. Because of the redundancy incorporated in the system design, the diesel-generator starting system provides its minimum required safety function under the following conditions.

(1) Design basis loss of coolant condition with loss-of-offsite power, by putting into operation the standby diesel generator.

(2) Maintenance, outage of failure of one of the two air starting systems associated with the diesel engine.

Components of the diesel generator starting system are designed to Seismic Category I requirements. Procurement of components is governed by the requirements of 10CFR50 Appendix B to ensure quality assurance in all phases of manufacture and installation. The diesel generator support systems meet the NUREG/CR-0660 recommendations 2.a, 2.b, 2.d and 5 with regard to protection of these systems from the adverse effects of dust and dirt (Subsection 9.5.13.8).Filters just upstream of the starting air distributor protect the air injectors from airborne contaminants. Each independent starting system has two redundant solenoid air valves. Therefore, system capability is maintained in the unlikely event of blockage of one air valve.

9.5.6.4 Tests and Inspection

Periodic tests and inspections are performed on the following:

(1) System pressure control pressure switches for proper and reliable function.

(2) Low pressure alarm signals for low receiver pressure and low pressure to the engine.

(3) Engine air admission valves and the admission line vent to ensure proper function in response to engine start signal.

(4) Pressure gauges on the receivers to verify calibration.

(5) Air receivers to clear accumulated moisture using the blowdown connection.

9.5.6.5 Instrument Application

An air receiver low pressure alarm is provided to alert the control room operator in case of loss of starting air pressure. See Section 8.3.1.1.8.5 for complete alarms.

9.5.7 Diesel Generator Lubrication System

9.5.7.1 Design Bases

The Diesel Generator Lubrication System is a self-contained system designed to supply clean, filtered oil to the engine and generator bearing surfaces at controlled pressure and temperature. Built-in capability ensures adequate lubrication of wearing surfaces, and cooling as necessary. An electric heater and a keep-warm circulating pump maintain sufficient circulation of warm oil to help keep the engine in standby readiness. The keep-warm pump also serves as a priming pump to provide prelubrication of engine components. (See Response 430.293 in Subsection 20.3.16.) The pumps, valves, tanks and heat exchangers shall be designed in accordance with ASME Code, Section III, Class 3, Quality Group C.

The system is located in a Seismic Category I structure providing protection from tornado-generated missiles and flood waters, as well as the effects of pipe whip and jet impingement from high and moderate energy pipe failures.

9.5.7.2 System Description

Although specific suppliers may differ in the final design, a typical P&ID is provided as Figure 9.5-9. See Subsection 9.5.13.5 for COL license information.

All components herein described are supplied as part of the diesel-generator package by the diesel-generator supplier. All three systems are nuclear safety-related except for

the keep-warm heaters and pumps. In the event of the LOPP or other emergency requiring diesel generator operation, the lube oil keep-warm system is shut down.

Each of the three diesel-generator lubrication systems consists of an oil sump in the engine frame, an engine-driven positive displacement pump, an oil cooler, a main header, and oil strainer and a filter. The main engine-driven lube oil pump takes oil from the sump, passes it through the lube oil cooler and lube oil filter, through a strainer, through the main header and back to the sump. A second feed line from the strainer supplies oil to the turbos via the rocker lube system. Constant oil pressure to the main header is maintained by pressure-regulating valves, which bypasses excess oil back to the sump.

Each of the three lube oil coolers are shell and tube type, built to TEMA Class C, and conform in all respects to ASME Code, Section III, Class 3. Cooling water for the coolers comes from the jacket cooling water (Subsection 9.5.5).

The diesel-generator sets have lube oil heating systems to keep the oil warm during standby. An electric lube oil heater heats the oil, which is circulated through the main header by a keep-warm oil circulating pump. The keep-warm circuit circulates oil through a filter to ensure oil cleanliness. The engine lube oil sump can be replenished by a lube oil supply pump actuated by the low level in the engine sump. The lube oil supply pump transfers lube oil from the lube oil supply tank to the engine sump. The supply tank is filled via pipe feed from a delivery tanker truck. The lube oil may be added to the engine oil sump during engine operation. The lube oil system is capable of operating for seven days at full load. All tanks, pumps, piping, and valves are built to ASME Section III, Class 3, Quality Group C or ANSI B31.1 and Seismic Category I.

9.5.7.3 Safety Evaluation

Each diesel-generator lubrication system is an integral part of the diesel generator. The system is not required to meet the single-failure criterion because a failure does not prevent the other two divisions of the emergency power system from providing adequate power to safely shut down the plant or to mitigate the consequences of any of the postulated accidents.

9.5.7.4 Tests and Inspection

The operating ability of the Diesel-Generator Lubrication System is tested and inspected during scheduled testing of the overall engine. Instrumentation is provided to monitor the lube oil temperature, pressure and sump level, ensuring proper operation of the system. During standby periods, the keep-warm feature of the system is checked at scheduled intervals to ensure that the oil is warm. Warm oil assists quick starting of the engine. Periodic sampling and analyzing of the lube oil is required to ensure good quality of oil in the system.

Local gauge board-mounted alarms signal low oil pressure, high oil temperature and low oil level. A remote combine alarm, one for each division, located in the main control room, annunciates on signal of diesel generator trouble from any alarm source on the local panel. Instruments receive periodic calibration and tests to verify their accuracy.

The lubrication systems are located in locked, controlled diesel-generator rooms, thus precluding unauthorized personnel from interfering with system operation. Also, any contamination of the lubricating oil by deleterious material is thereby prevented.

9.5.8 Diesel-Generator Combustion Air Intake and Exhaust System

9.5.8.1 Design Bases

All components of the Diesel-Generator Combustion Air Intake and Exhaust System shall be designed and qualified to Seismic Category I requirements. All piping shall be designed in accordance with ASME Code, Section Ill, Class 3, Quality Group C. Failure of the intake and exhaust system in any one diesel generator shall not compromise the readiness or operability of any other diesel generator. Except for the exhaust silencers, the system shall be housed in a Seismic Category I and tornado-generated missile-protected structure. The system shall also be protected from flooding and the effects of pipe breaks.

The exhaust silencers for the diesel generators shall be seismically mounted and bolted down in the horizontal position such that the likelihood of their sustaining significant damage, or becoming missiles during a tornado or hurricane event is extremely remote. However, the probability of the silencers themselves being damaged due to externally generated missiles is acceptable. This is because the silencer can be lost without affecting the operation of the diesel unless debris from the damaged silencer clogs the exhaust pipe. In this highly unlikely scenario, the diesel would be assumed lost and the plant shutdown could still be accomplished with either of the remaining two diesels.

The design basis for the Diesel Generator Combustion Air Intake and Exhaust System, regarding protection from the effects of contaminating substances related to the facility site, systems, and equipment is as follows:

(1) There are no contaminating substances available within the ABWR buildings to the combustion air intake in quantities which could degrade the diesel engine performance.

(2) Restriction or contaminating substances from the plant site, which may be available to the combustion air intake is COL license information requirement (Subsection 9.5.13.1).

(3) The diesel engine exhaust system is capable of exhausting the products of combustion to the atmosphere.

9.5.8.2 System Description

Although specific suppliers may differ in the final design, a typical P&ID is provided as the center portion of Figure 9.5-6. See Subsection 9.5.13.5 for COL license information.

Each engine DG-A, DG-B and DG-C takes combustion air from its own inlet air cubical above the diesel generator room. The air is filtered as it enters the cubical through the outside wall above. See Section 9.4.5.5 for a description of the diesel-generator HVAC system.

Engine exhaust gases are ducted out of the building. The exhaust is ducted up through the Reactor Building to the roof where the silencers are mounted. Each engine has its own exhaust system.

In order to protect the crank case from accumulation of fumes and possible consequent fire and explosion, the crank case is kept at negative pressure by vacuum blowers. The gases are exhausted to an outside vent via a 150 A pipe which passes through the Reactor Building wall (see Figure 9.5-6). Pressure sensors will detect unacceptable high pressure conditions in the crank case, and will annunciate this condition to the operator (Figure 9.5-6). This signal will also shut down the diesel unless a LOCA signal is present (Table 8.3-5).

9.5.8.3 Safety Evaluation

Both the intake and exhaust system components of all three engines are completely separate and independent. Failure in any one system has no effect on the readiness and/or operability of either of the others.

For all systems, the air intake is through the wall of the Reactor Building at approximately 11.5m above grade, while the exhaust gases are released to the atmosphere on the Reactor Building roof at approximately 26m above grade. Therefore, the possibility of products of combustion diluting the oxygen content of the intake air is essentially nil. Also, other gases will not be stored close enough to the diesel air intake that their release to the atmosphere would dilute the intake air and affect the performance of the diesel generators.

See the Reactor Building arrangement drawings in Section 1.2 for intake and exhaust locations, Subsection 3.8.4 for design of the Reactor Building, Section 3.4 for flood protection and Section 3.6 for pipe failure protection.

The combustion air intakes are protected by grills through which the air passes vertically upward. This minimizes plugging of the filters by gross debris picked up by events such

as a tornado or a hurricane. Particulate matter small enough to pass through the grill can cause plugging of the inlet filters. To monitor this condition, a differential pressure gauge is installed across each filter (see Figure 9.5-6).

The effect of a local decrease in barometric pressure (e.g., due to a tornado or hurricane) is largely negated by the engine turbochargers.

All intake and exhaust ducting, as well as the ducting hangers, are designed and qualified to Seismic Category I requirements. The ducting also conforms to ASME Section III, Class 3, Quality Group C requirements.

9.5.8.4 Inspection and Testing Requirements

Visual inspection of the diesel-generator combustion air intake and exhaust system may be carried out concurrently with regularly scheduled diesel-generator testing and inspection. Integrity of the ducting and joints, filter condition, intake and exhaust silencer condition inspection are included in the diesel-generator inspection procedure.

9.5.9 Suppression Pool Cleanup System

9.5.9.1 Power Generation Design Bases

The primary function of the Suppression Pool Cleanup (SPCU) System is to provide a continuous purifying water treatment of the suppression pool. During normal plant operation, the SPCU is designed to recirculate approximately 250 m^3/hr of suppression pool water through a Fuel Pool Cooling and Cleanup System filter-demineralizer.

The SPCU System also fills the upper pools from the suppression pool during a refueling outage.

9.5.9.2 System Description

Except for the primary containment penetrations, the SPCU is a non-safety-related system designed to provide a continuous purifying water treatment of the suppression pool. The system removes various impurities by filtration, adsorption, and ion exchange processes. The system maintains the water quality in the suppression pool at a quality equal to that of the fuel and equipment pools. Water quality limits for these upper pools are specified in Subsection 9.1.3.2.

The SPCU System can provide makeup to the fuel pool and the surge tanks of the RCW System as a backup to normal makeup supplied by the condensate system.

The SPCU System also provides water from the suppression pool to the upper pools before a refueling outage.

The system draws water from the suppression pool through a single 250 m^3/hr pump, and directs flow to either the fuel pool seismic makeup line or to a connection to the filter demineralizer that is part of the FPC System. Water is returned from the filter-demineralizer and directed to the suppression pool or the upper pools via the dryer/separator (D/S) pit.

In the event of a LOCA, the SPCU System function is automatically terminated to accomplish containment isolation. Containment isolation valves are provided with Class 1E power.

The SPCU System, consisting of piping, valves, and instrumentation, is shown in Figure 9.5-1. The system has no unique major components.

9.5.9.3 Safety Evaluation

The SPCU System has no safety-related function, except for the primary containment isolation, as previously defined. Failure of the system does not compromise any safety-related system or component and does not prevent safe reactor shutdown.

However, the system does incorporate some features that assure reliable operations over the full range of normal plant operations. These features consist primarily of instrumentation that monitors and/or controls SPCU operation and performance.

Portions of the SPCU System that penetrate the containment are provided with isolation valves which are automatically closed by an isolation signal from leak detection system.

The containment isolation signal logic receives reactor low water-level signals and drywell high-pressure signals. These inputs isolate the SPCU System to prevent containment bypass leakage.

9.5.9.4 Tests and Inspections

All systems piping and components shall be hydrostatically tested prior to plant startup. Non-destructive testing shall be performed in accordance with ASME Section III, Class 2 and 3 requirements, where applicable. The system is designed to permit periodic inservice inspection of all system components to ensure the integrity and capability of the system.

The SPCU System is designed for periodic pressure and functional testing to assure.

(1) Its structural and leaktight integrity, by visual inspection of its components.

(2) The operability and the performance of the active components of the system.

(3) The operability of the system as a whole.

Motor-operated isolation valves shall be tested periodically to assure that they are capable of opening or closing by manual switches in the control room and to confirm by observation that the valve position lights on the control panel correctly indicate valve position.

9.5.9.5 Instrumentation Requirements

Operation of the SPCU System is controlled by the plant operator, who may select either of the operational modes of the system or turn it off from the control room.

The containment isolation valves are supplied with position indication in the control room and remote-manual as well as automatic operation.

9.5.10 Motor-Generator Set

9.5.10.1 Design Bases

The primary function of the motor-generator (M-G) set equipment is to provide additional energy storage capacity for extending the coastdown time of the connected reactor internal pumps (RIPs) during a complete loss of AC power bus incident. In normal operation, the MG set converts the incoming electrical power to mechanical energy, then back to electrical power before using it to source the connected loads. By properly sizing the amount of inertia in the MG set for mechanical energy storage, the generator's output can be made less sensitive to large fluctuations in the input power bus voltage. The design bases of the equipment are the following performance criteria:

(1) Following a complete loss of AC power bus input, the operating speed of the connected RIPs shall be maintained, up to the rated speed, for at least one second.

(2) The subsequent speed reduction in the connected RIPs shall not be greater than –10% per second for a minimum period of two seconds.

In addition to meeting the above equipment performance criteria, the MG set is designed to tolerate certain ranges of normal voltage and/or frequency variations in input power source with negligible effect on generator output. These ranges include the normal, continuous variations in bus voltage up to ±10% of rated and in frequency of up to ±5% of rated. Also, fluctuations in bus voltage as caused by the starting or tripping of other large AC machines connecting to the same bus shall be tolerated.

9.5.10.2 System Description

Two MG sets are provided; each is connected to an independent 6.9 kV power bus. The individual power buses are separated from one another by unit auxiliary transformer and circuit breakers. Each MG set is designed to provide constant voltage and constant frequency power to three adjustable speed drives (ASDs). These ASDs are the static

converter devices which generate the appropriate variable voltage, variable frequency power to the connected RIPs.

Each MG set consists of the following components:

(1) An induction motor.

(2) A generator and excitation system. The exciter design is of brushless type.

(3) A flywheel of appropriate moment of inertia to satisfy the pump speed coastdown requirements as specified in Subsection 9.5.10.1.

(4) Control and protective circuits. The control circuit is designed to maintain generator output at a fixed voltage-to-frequency (V/f) ratio for optimum RIP speed modulation. Protective logic and circuits, monitoring instrument, annunciators, indicators, etc. are provided to protect the MG set components from being damaged by consequences of abnormal equipment operation.

The MG set does not interface directly with the ASD/RIP loads; it interfaces with the loads through three isolation transformers. These isolation transformers provide two functions in the RIP power supply systems. They step down the MG set voltage output to the level compatible with the rectifier circuit in the ASD. Also, by phase-shifting the output of the three transformers by ±20 degrees among one another, a majority of the harmonic currents produced by the 6-pulse ASD converter is canceled, thus preventing most of the negative-phase-sequence current from flowing back into the generator.

The MG set will be started with no load. This is accomplished by first leaving all connected ASD loads in their tripped position. The MG set motor is started by a control switch in the main control room, and accelerates directly to the rated speed. The connected ASD loads are then sequentially placed online by the control room operator through issuance of proper mode switch commands. The MG set output varies from no load to full load in accordance with the variable operating speed of the RIP's. Shutdown of the MG sets is the exact reverse of the startup.

9.5.10.3 Safety Evaluation

The MG set equipment performs no safety-related function. Failure of the MG set equipment does not compromise any safety-related system or component and does not prevent safe reactor shutdown.

However, the equipment does include some inherent passive design features which help to alleviate the consequence of a complete loss of AC power bus or momentary voltage drop event. This feature involves automatic extension of electrical coastdown power to the connected RIPs during a bus failure event.

In normal operation, the consequence of having one MG set failure is no worse than that of a three-RIP trip event.

9.5.10.4 Tests and Inspection

Each major component of the MG set, including the motor, generator, flywheel and control panel, will be tested in the vendor's facility for verification of design and functional conformance. The motor and generator components will be measured for moment of inertia and inspected for mechanical integrity. The electrical properties and load characteristics of the individual motor and generator components will also be tested.

The complete, assembled MG set will be tested in the factory for control panel function, as well as for normal and transient performance response. The normal performance test will be repeated in the site during plant startup.

The MG set equipment is always in service during plant operation, hence its operability is continuously demonstrated. Its extended coastdown performance is a result of its inherent design that does not require special demonstration by periodic testing.

9.5.10.5 Instrumentation Requirements

The operation of the MG set equipment is monitored by instrumentation for early detection of abnormal behavior. The motor input voltage, generator output voltage, current and speed signals are available for display in the control room. In addition, protective relays are supplied with the equipment for automatic detection and alarm annunciation of control panel malfunction, unbalanced loads, breaker trip, and open or short circuit conditions.

9.5.11 Combustion Turbine/Generator

9.5.11.1 Design Basis

The primary functions of the combustion turbine generator (CTG) are:

(1) The alternative AC (AAC) power source during the station blackout (SBO) event as defined in Regulatory Guide 1.155 (see Appendix 1C).

(2) A standby non-safety-related power source located on the site to energize non-safety-related plant investment protection (PIP) loads during loss-of-preferred-power (LOPP) events.

(3) A standby power source during shutdown operations.

The design bases of the equipment shall meet the following performance criteria:

(1) The CTG unit shall automatically start, accelerate to required speed, reach nominal voltage and frequency, and begin accepting load within two minutes of receipt of its start signal.

(2) The CTG shall be capable of being manually connected to SBO shutdown loads (via any one of the Class 1E diesel generator buses) from the main control room within ten minutes from the beginning of the event. The CTG shall also be capable of being manually connected to the remaining Class 1E buses. However, the CTG shall not be normally connected to plant safety buses nor require any external AC power to operate. There shall be two circuit breakers (one Class 1E and one non-class 1E) in series between the CTG and each Class 1E bus.

(3) The reliability of the CTG unit, based on successful starts and successful load runs, shall be ≥ 0.95, as calculated by methods defined in NSAC 108, The Reliability of Emergency Diesel Generators at US Nuclear Power Plants.

(4) The CTG shall have an ISO rating (continuous rating at 15°C and at sea level) of at least 9 MW, with nominal output voltage of 6.9 kV at 60 Hz.

(5) The generator output shall have a steady-state voltage regulation within 0.5% of required voltage when the load is varied from no load to rated load and all transients have decayed to zero. As a minimum, the CTG shall have sufficient capacity to energize required shutdown loads.

(6) The transient response of the generator shall be capable of assuming sudden application of up to 20% of the generator NEMA rating when the generator, exciter, and regulator are operating at no load, with required voltage and frequency resulting in less than 25% excursion from required voltage. Recovery shall be within 5% of required voltage, with no more than one undershoot or one overshoot within one second.

(7) With the generator initially operating at required voltage, and with a constant load between 0 and 100% at rated power factor, the change in the regulated output shall not exceed 1% of required voltage for any 30-minute period at a constant ambient temperature.

(8) The bus tie arrangement, and the capacity and capability of the CTG, is designed such that the time to place the CTG on line to supply any one load group of safe shutdown loads (i.e., includes manual connection to any one Class 1E bus) shall be within 10 minutes.

(9) The non-Class 1E CTG shall be physically and electrically independent from the Class 1E diesel generators such that weather-related failures, common cause failure, or single-point vulnerabilities are minimized or precluded.

(10) The CTG shall be capable of being periodically inspected, tested and maintained (see Subsection 9.5.13.19 for COL license information).

9.5.11.2 System Description

The interconnections for the CTG are shown on the power distribution system single line diagram (SLD), Figure 8.3-1.

The CTG is designed to supply standby power to selected loads on any two of the three turbine building (Non-Class 1E) 6.9 kV buses which carry the plant investment protection (PIP) loads during LOPP events. The CTG automatically starts on detection of a voltage drop of ≤70% on its preselected PIP buses. When the CTG is ready to load, if the voltage level is still deficient, power is automatically transferred to the CTG.

The CTG fuel oil and transfer system is separate from those of the diesel generators.

Manually controlled breakers also provide the capability of connecting the combustion turbine generator to any of the 6.9 kV Class 1E buses if all other power sources are lost. The reconfiguration necessary to shed PIP and connect the CTG to a preselected bus for emergency shutdown loads can be accomplished from the main control room within 10 minutes of the onset of a postulated station blackout event. Thus, the CTG meets the requirements for alternate AC (AAC) source (per Regulatory Guide 1.155) such that a station blackout coping analysis is not required. The additional connection capability for the remaining Class 1E buses enable the operator to start and operate redundant shutdown loads and other equipment loads if necessary.

The CTG is provided with a fuel supply that is separate from the fuel supply from the Class 1E onsite AC power system. The fuel shall be sampled and analyzed to maintain quality consistent with standards recommended by the CTG manufacturer.

The CTG is completely independent, and located in a separate building, from the Class 1E AC power sources. Thus, no single-point vulnerability exists between them.

The CTG consists of a completely-packaged, fully-assembled and tested, skid-mounted unit with the following components:

(1) A gas turbine with diesel hydraulic start system (i.e., capable of black start). The unit shall be operated with liquid fuel.

(2) A generator with brushless excitation system and terminal box.

(3) A reduction drive gear system between the turbine and generator.

(4) Lubrication system.

(5) An oil cooling system.

(6) Accessory gearbox.

(7) Air intake and exhaust equipment.

(8) Microprocessor-based control system with control and protective circuits.

(9) Panels, junction boxes and other accessories as required.

See Appendix 1C for requirements for the CTG oil storage and transfer.

9.5.11.3 Safety Evaluations

The CTG is non-safety-related and its failure will not affect safe shutdown of the plant. The unit is not required for safe shutdown of the plant, but is provided as an alternative AC (ACC) source to mitigate the consequences of a station blackout (SBO) event. The CTG does not supply power to nuclear safety-related equipment except on condition of complete failure of the emergency diesel generators and all offsite power (SBO event). Under this condition, the CTG can provide emergency backup power through manually-actuated breakers in the same manner as the offsite power sources. This provides an alternate AC (AAC) power source in accordance with RG 1.155. Adequate protection of the CTG against sabotage is provided by locating the unit inside the security protected area.

Relative to its function as an AAC source, the CTG complies with Subsection 9.5.14, References 9.5-7, 9.5-8, and 9.5-9.

For detailed assessment of the ABWR during station blackout, see Appendix 1C.

9.5.11.4 Tests and Inspections

The initial test qualification requirements described in IEEE-387, IEEE Standard Criteria for Diesel Units Applied as Standby Power Supplies for Nuclear Power Generating Stations, shall also be applied to the CTG in order to ensure adequate system reliability. However, the factory-test portion of this requirement may be waived if the identically designed unit has been shown capable of maintaining a reliability of 0.99 over a five-year period.

The reliability of the CTG shall meet or exceed 95% as determined in accordance with NSAC-108, or equivalent methodology.

Site acceptance testing, periodic surveillance testing and preventive maintenance, inspections, etc., shall be performed in accordance with the manufacturer's recommendations, including time intervals for parts replacement, the plant maintenance program, and the operational reliability program (Subsection 9.5.13.19).

9.5.11.5 Instrumentation Requirements

The CTG is provided with local instrumentation and control systems suitable for manual startup and shutdown, and for monitoring and control during operation. Automatic startup and subsequent loading is controlled via the control console located in the main control room. Controls are also provided in the main control room for manual startup of the CTG, and to facilitate connections to the Class 1E buses, should a station blackout occur.

Control room displays are provided to monitor starting, lubricating and fuel supply systems, the combustion air intake and exhaust system, and the excitation, voltage regulation and synchronization systems. CTG start/stop capability is provided in the main control room.

Generator output voltage, current, kVA, power factor, Hz, etc., are also displayed in the control room. Annunciators and computer logs provide early detection of abnormal behavior.

9.5.12 Lower Drywell Flooder

9.5.12.1 Design Basis

The function of the lower drywell flooder (LDF) is to flood the lower drywell with water from the suppression pool in the unlikely event of a severe accident where the core melts and causes a subsequent vessel failure to occur.

The equipment shall meet the following performance criteria:

(1) The LDF shall provide a flow path from the suppression pool to the lower drywell when the drywell air space temperature reaches 260°C.

(2) The LDF shall pass sufficient flow from the suppression pool to the lower drywell to quench all of the postulated corium, cover the corium, remove the corium decay heat, and provide an overlying pool of water in the lower drywell as confirmed by severe accident analysis (Subsection 19E.2.8.2).

(3) The LDF shall operate automatically in a passive manner.

(4) The LDF outlet shall be at least one meter above the lower drywell floor.

(5) The LDF inlet shall be located as far below the bottom of the first horizontal drywell-to-wetwell vent as possible while still meeting the requirements for the location of the LDF outlet.

(6) The LDF shall not become a flow path from the suppression pool to the lower drywell during design basis accidents (DBAs) such as loss-of-coolant accidents (LOCAs) or during normal plant operation.

(7) The LDF shall distribute flow evenly around the circumference of the lower drywell.

9.5.12.2 System Description

The LDF, shown schematically in Figure 9.5-3, provides a flow path for suppression pool water into the lower drywell area during a severe accident scenario that leads to core meltdown, vessel failure, and deposition of molten corium on the lower drywell floor. Molten corium is a molten mixture of fuel, reactor internals, the vessel bottom head and control rod drive components. The flow path is opened when the lower drywell airspace temperature reaches 260°C.

The flow of suppression pool water to the lower drywell through the LDF forms a pool of water above the core debris. This pool cools the molten corium and subsequently removes the corium decay heat. This limits the drywell temperature to 260°C and avoids degradation of non-metallic penetration seals in the upper and lower drywell. Interaction between corium and the concrete floor is also stopped. This delays the time of fission product releases for the severe accident, which allows for more decay of fission products and results in lower release fractions. Any fission products released from the debris bed will be scrubbed by the overlying water pool.

The LDF consists of ten pipes that run from the vertical pedestal vents into the lower drywell. Each pipe contains a fusible plug valve connected to the end of the pipe that extends into the lower drywell by a flange. The fusible plug valves open when the drywell air space (and subsequently the fusible plug valve) temperature reaches 260°C. When the fusible plug valves open, a minimum of 10.5 L/s of suppression pool water will be supplied through each flooder pipe (105 L/s total) to the lower drywell to quench the corium, flood the lower drywell and remove corium decay heat, which is estimated at 1% of rated thermal power. The flow rate is based on a minimum hydrostatic head of 200 mm above the flooder pipe inlet centerline and takes the frictional losses through the flooder pipe and fusible plug valve into account.

The minimum flow necessary to remove decay heat and the energy from zirconium reactions with the water and carbon dioxide released by concrete ablation is 18 L/s, which can be supplied by two of the ten lines. If nine lines are available (assuming single failure), the flow will be sufficient to fill the lower drywell within two hours.

The inlet centerlines of the drywell flooder pipes are located 10.2 meters below the bottom of the vessel, and the outlets of the fusible plug valves are located at least one meter above the lower drywell floor.

The fusible plug valves are made from flanges welded to the end of the vent inside the lower drywell area. The inner diameter of the pipe is slightly enlarged to accommodate a stainless steel separation disk, an insulating disk and fusible metal. The stainless steel disk prevents suppression pool water from corroding the plug material. The insulating disk thermally insulates the fusible metal from the wetwell water to assure that the fusible metal is not cooled by wetwell water and prevented from melting during the severe accident high lower drywell temperature conditions. Teflon was selected for the insulating disk because it has a softening temperature of 400°C and a maximum continuous operating temperature of 288°C, both of which are above the plug melting temperature. Furthermore, teflon has high chemical resistance and will not adhere to the stainless steel plug or the fusible plug. The end of the fusible plug valve is covered with a plastic cover that has a low melting point. The purpose of the cover is to avoid corrosion of the fusible metal material and to assure that any toxic components from the fusible metal material that might be released do not escape into the lower drywell area during normal plant operation.

The fusible plug valve is mounted in the vertical position, with the fusible metal facing downward, to facilitate the opening of the valve when the fusible metal melting temperature is reached. The opening time for the valve is found to be less than 10 minutes from the time the lower drywell gas space reaches 260°C.

The drywell flooder pipes are welded to the stainless steel vertical vent pipes in the pedestal and to the steel liner in the lower drywell.

9.5.12.3 Safety Evaluation

9.5.12.3.1 General Evaluation

The LDF is a passive injection system and is maintained in an operable state whenever the reactor is critical. The system is never expected to be needed for safety reasons because of the extensive array of water injection systems available to maintain core cooling.

The LDF is safety-related because it is a structural extension of the blowdown vent system. The LDF is Seismic Category I. The quality control classification of the LDF components is the same as the pedestal and the blowdown vents. Therefore, it meets the same structural design, materials, welding, fabrication, thermal and structural analysis, and quality assurance requirements as the reactor pedestal.

The LDF has sufficient redundancy that the failure of one fusible plug to open does not degrade the ability of the system to flood the drywell and quench the corium.

The design pressure of the LDF components is 0.108 MPaD.

The design temperature of the LDF components is 171°C. This value is the primary containment design temperature and considers DBA events. If the LDF components lose pressure integrity at higher temperatures during a severe accident, then the LDF function (i.e., drywell flooding) is performed. Therefore, the design temperature does not need to be higher than the temperature based on DBA events.

The LDF components have zero leakage when subjected to design differential pressure of 0.108 MPa at a design temperature of 171°C.

The portions of the flooder pipe that extend from the steel liner in the lower drywell meet the requirements of ASME Class 2 piping components.

An ANSI B16.5 stainless steel weld-neck flange (or equivalent) is used at the interface between the flooder pipe and the fusible plug valve. The flooder pipe is made of the same material as the blowdown vent pipe or of a stainless steel material that is compatible for welding to the blowdown vent pipe.

The fusible plug is required to open fully when the outer metal temperature of the valve reaches 260°C during a severe accident and to pass a minimum of 10.5 L/s with 375 mm of water above the valve inlet.

A plastic cover on the valve outlet seals the valve from the intrusion of moisture that could cause corrosion of the fusible metal material. The plastic cover has a melting point below 130°C and greater than 70°C and is required to melt completely or offer minimal resistance to valve opening when the opening temperature is reached.

9.5.12.3.2 Consequences of One Flooder Line Opening First

Core debris that enters the lower drywell will be distributed fairly uniformly. The lower drywell floor was designed so that debris spreading would not be hindered. The temperature of the lower drywell air space and structures should be even more uniform because of convective and radiative heat transfer from debris material. Cooler regions will tend to absorb more heat than warmer ones resulting in temperature equalization.

However, if highly non-uniform debris dispersal occurs, it has been postulated that one flooder line could open and its operation could delay or even prevent the other lines from activating. In the worst physical case, the initiation of one flooder line causes crust formation without completely quenching the debris. The crust limits heat transfer from the surface of the debris bed. Core-concrete interaction (CCI) will occur if surface heat transfer is reduced enough.

CCI results in large quantities of gases being formed under the surface of the crust. The gases will increase in pressure due to continued generation until the crust ruptures or

they escape from the edges of the bed. In either case, the gases will pass from the debris bed into the lower drywell airspace. The passage either will be unobstructed with gasses exiting the debris above the water elevation or through an overlying layer of water. Since only one flooder line is presumed active, the water layer, if it exists, will be thin and no significant amount of heat will be transferred from the gas to the liquid.

Concrete has an ablation temperature of approximately 1500 K. The released gases from core concrete interaction will be at least at this temperature. Higher temperatures may be reached by the gases as they interact with debris material in their exit. Thus, gases enter the lower drywell air space at very high temperature. The CCI gases will increase the temperature of the lower drywell air space. More flooder lines will become active as the lower drywell temperature increases. For this reason, the activation of a single flooder line is transient condition at worst and is not expected to adversely affect the operation of the other lines.

9.5.12.3.3 Estimation of Net Risk

In order to assess the net risk of the lower drywell flooder system, a sensitivity study was performed in Subsection 19E.2.8.2.7 using three failure probabilities for the lower drywell flooder. In these cases, the failure probability of the lower drywell flooder was increased from its base case value to 1.0.

The overall performance of the ABWR design is not sensitive to the LDF failure probability. Failure of the LDF leads to an increase in the probability of Dry CCI. Thus, the probability of Dry CCI increases by one, two and three orders of magnitude, respectively for the three sensitivity cases. However, the base case results for Dry CCI are so small that a three order of magnitude increase does not impact other results significantly.

The principal conclusions of the sensitivity studies are:

(1) Pedestal failure does not increase since it is dominated by the sequences where core-concrete interaction persists even though the lower drywell is flooded.

(2) The only probabilistic output which shows any significant variation is drywell head seal overtemperature leakage which exhibits a two fold increase for a two orders of magnitude increase in the passive flooder failure probability, and a ten fold increase for a three order of magnitude increase. The change in seal leakage is much less than the change in passive flooder failure probability since high RPV pressure sequences with entrainment of debris to the upper drywell and failure of the upper drywell sprays dominate the seal leakage sequences in the base analysis.

(3) Even for the case where the passive flooder is assumed to be unavailable, the frequency associated with the Dry CCI is below the lower limit considered in the evaluation of offsite dose.

Thus, it is seen that the lower drywell flooder does not affect net risk for frequencies of interest. Therefore, the value of the lower drywell flooder system is not measured as a direct impact on risk. Rather, it should be viewed as a passive system which serves to limit the impact of uncertainty in operator actions and allows the ABWR design to mitigate a severe accident in a purely passive manner.

9.5.12.4 Testing and Inspection Requirements

The ability of the LDF to mitigate severe accidents by passing sufficient water to cover and quench the postulated corium in the drywell is confirmed by severe accident analysis (Appendix 19E).

No testing of the LDF system will be required during normal operation. During refueling outages, the following surveillance would be required:

(1) During each refueling outage, verify that there is no leakage from the fusible plug valve flange or outlet when the suppression pool is at its maximum level.

(2) Once every two refueling outages, lower suppression pool water level or plug the flooder pipe inlet and replace two fusible plug valves. Test the valves that were removed to confirm their function. This practice follows the precedent set for inservice testing of Standby-Liquid Control System (SLCS) explosive valves in earlier boiling water reactors.

9.5.12.5 Instrumentation Requirements

The LDF operates automatically in a passive manner during a severe accident scenario that involves a core melt and vessel failure. No operator action is required; therefore, no instrumentation is placed upon the system. An inadvertent opening or leak would be detected by the lower drywell leak detection system and the suppression pool water level instrumentation which would result in plant shutdown.

During severe accidents, operation of the LDF is confirmed by other instrument readings in the containment. These instruments include those which would record the drywell temperature reduction and the lowering of suppression pool water level.

9.5.13 COL License Information

9.5.13.1 Contamination of the DG Combustion Air Intake

The COL applicant shall take measures to restrict contaminating substances from the plant site which may be available to the diesel generator air intakes (Subsection 9.5.8.1).

9.5.13.2 Use of Communication System in Emergencies

Procedure for use of the plant communication system in emergencies including operation from RSS in the event of a main control room fire shall be provided by the COL applicant (Subsection 9.5.2.4).

9.5.13.3 Maintenance and Testing Procedure for Communication Equipment

Maintenance and testing procedures for the plant communication systems shall be provided by the COL applicant (Subsection 9.5.2.5).

9.5.13.4 Use of Portable Hand Light In Emergency

The portable sealed-beam battery-powered hand light is used by the fire brigade and other personnel during an emergency to achieve a plant shutdown. The COL applicant's design shall comply with the BTP CMEB 9.5-1, Position C.5.g(l) and (2) per Subsection 9.5.1.2.3. The COL applicant shall supplement this subsection accordingly as applicable.

9.5.13.5 Vendor Specific Design of Diesel Generator Auxiliaries

The COL Applicant's vendor-specific diesel generator support systems (i.e., the D/G Fuel Oil System, the D/G Cooling Water System, the D/G Starting Air System, the D/G Lubrication System, the D/G Combustion Air Intake and Exhaust System) shall be reviewed for differences in design with those discussed in Subsections 9.5.4 through 9.5.8, respectively. A discussion of such differences shall be provided by the COL applicant.

Specific NRC requested information lists as follows:

(1) Not Used

(2) Provision for stick gauges on fuel storage tanks.

(3) Description of engine cranking devices.

(4) Duration of cranking cycle and number of engine revolutions per start attempt.

(5) Lubrication system design criteria (pump flows, operating pressure, temperature differentials, cooling system heat removal capabilities, electric heater characteristics).

(6) Selection of a combustion air flow capacity sufficient to assure complete combustion.

(7) Volume and design pressure of the air receivers (sufficient for 5 start cycles per receiver).

(8) Compressor size (sufficient discharge flow to recharge the system in 30 minutes or less).

See Subsections 9.5.4.2, 9.5.5.2, 9.5.6.2, 9.5.7.2 and 9.5.8.2.

9.5.13.6 Diesel Generator Cooling Water System Design Flow and Heat Removal Requirements

The COL applicant shall provide the table which identifies the design flow and heat removal requirements for the diesel generator cooling water system. It shall include the design heat removal capacities of all the coolers or heat exchangers in the system.

Specific NRC requested information lists as follows:

(1) Type of jacket water circulating pumps (i.e., motor-driven or others).

(2) Type of temperature sensors (use "Amot" brand or equal per NUREG.CR-0660, Page V-17, Recommendation under Item 4).

(3) Expansion tank capacity.

(4) NPSH of jacket water circulating pump.

(5) Cooling water loss estimates.

See Subsection 9.5.5.2.

9.5.13.7 Fire Rating for Penetration Seals

The COL applicant shall provide 3-hour fire rated penetration seals for all high energy piping or, as a minimum, state those conditions when such seals cannot be provided and what will be installed as a substitute. The detail design shall provide completely equivalent construction to tested wall assemblies or testing will be required (Subsection 9A.5.1).

9.5.13.8 Diesel Generator Requirements

(1) The diesel generator operating procedures for a particular diesel-engine make and model shall require loading of the engine up to a minimum of 40% of full load (or lower load per manufacturer's recommendation) for 1 hour after up to 8 hours of continuous no-load or light load operation.

(2) Diesel generator selection shall include prudent component design with dust tight enclosures. Construction guidelines shall include provisions for minimizing accumulation of dust and dirt into equipment. These shall be in accordance with recommendations 2.a, 2.b, 2.d and 5 of NUREG/CR-0660 (Subsection 9.5.6.3).

(3) The diesel generator operating procedure shall include provisions to avoid as much as possible or otherwise restrict the no-load or low-load operation of the engine/generator for prolonged periods of time; or operate the engine at nearly full-load following every no-load or low-load (20% or less) operation lasting for a period of 30 minutes or more (Subsection 8.3.1.1.8).

9.5.13.9 Applicant Fire Protection Program

The following areas are out of the ABWR Standard Plant design scope for the fire protection program, and shall be included in the COL applicant's fire protection program:

(1) Main transformer

(2) Equipment entry lock

(3) Fire protection pumphouse

(4) Ultimate heat sink

The COL applicant's fire protection program shall comply with the SRP Section 9.5.1, with ability to bring the plant to safe shutdown condition following a complete fire burnout of a fire area/division without a need for recovery (Subsection 9.5.1).

9.5.13.10 HVAC Pressure Calculations

The COL applicant shall provide pressure calculations and confirm capability during preoperational testing of the smoke control mode of the HVAC systems as described in Subsection 9.5.1.1.6.

9.5.13.11 Plant Security Systems Criteria

The COL applicant's design of the security system (Subsection 9.5.2) shall include an evaluation of its impact on plant operation, testing, and maintenance. This evaluation shall assure that the security restrictions for access to equipment and plant regions is compatible with required operator actions during all operating and emergency modes

of operation (i.e., loss of offsite power, access for fire protection, health physics, maintenance, testing and local operator). In addition, this evaluation shall assure that:

(1) There are no areas within the Nuclear Island where communication with central and secondary alarm stations is not possible.

(2) Portable security radios will not interfere with plant monitoring equipment.

(3) Minimum isolation zone and protected area illumination capabilities cannot be defeated by sabotage actions outside of the protected area.

(4) Electromagnetic interference from plant equipment startups or power transfers will not create nuisance alarms or trip security access control systems.

9.5.13.12 Not Used

9.5.13.13 Diesel Fuel Refueling Procedures

The COL applicant shall establish procedures to verify that the day tank is full prior to refilling the storage tank. This minimizes the likelihood of sediment obstruction of fuel lines and any deleterious impacts on diesel generator operation.

9.5.13.14 Portable and Fixed Emergency Communication Systems

The COL applicant's design of the portable radio communication system and the fixed emergency communication system shall comply with BTP CMEB 9.5-1, position C.5.g(3) and (4). The COL applicant will supplement Subsection 9.5.2.6 accordingly, as applicable.

9.5.13.15 Identification of Chemicals

The COL applicant shall provide protection features for liquid insulated transformers and will identify the type and location of chemicals as required by SRP Section 13.2.2 (Subsection 9.5.1.2).

9.5.13.16 NUREG/CR-0660 Diesel Generator Reliability Recommendations

Programs shall be developed to address NUREG/CR-0660 recommendations regarding training, preventive maintenance, and root-cause analysis of component and system failures.

9.5.13.17 Sound-Powered Telephone Units

The COL applicant shall provide the sound-powered telephone units to be used in conjunction with the system described in Subsection 9.5.2.2.2.

9.5.13.18 Fire-Related Administrative Controls

The COL applicant shall provide the description of the administrative controls outlined in Subsection 9.5.1.6.4.

9.5.13.19 Periodic Testing of Combustion Turbine Generator (CTG)

Appropriate plant operating procedures shall include periodic testing and/or analysis to verify the adequacy of the CTG to meet alternate AC (AAC) requirements for station blackout and to support its use in Section 3.8 of the Technical Specification. As a minimum, such procedures shall verify the following:

(1) For each 6.9 Kv emergency bus (staggered among the three buses at 18-month intervals), verify the CTG starts and energizes the bus within 10 minutes and energizes all required loads (as defined in the "LOCA-Loads" section of Table 8.3-4) within 15 minutes. The steady-state CTG voltage and frequency shall be ≥6210 V and ≤7590 V, and ≥58.8 Hz and ≤61.2 Hz. All CTG starts may be preceded by an engine prelube period.

(2) The operator can accomplish this from the main control room.

(3) One Class 1E circuit breaker and one non-Class 1E circuit breaker exist and are functional between each of the Class 1E diesel generator buses and the CTG. (Note that only the circuit breakers for the preselected division are racked in. The remaining two divisions have their Class 1E breakers normally racked out, as shown in Figure 8.3.1.)

(4) Each 92 days, verify the combustion turbine generator (CTG) starts and achieves steady state voltage (≥6210 V and ≤7590 V), and frequency (≥58.8 Hz and ≤61.2 Hz) within 2 minutes. Load the CTG to ≥90% and ≤100% of its continuous rating and operate it with this load for at least 60 minutes. All CTG starts may be preceded by an engine prelube period.

(5) The reliability of the CTG is at least 0.95 as calculated by methods defined in NSAC 108, The Reliability of Emergency Diesel Generators at US Nuclear Power Plants.

9.5.13.20 Operating Procedures for Station Blackout

Appropriate operating procedures and personnel training shall be developed to:

(1) Address the operation of the AAC-CTG during an SBO event

(2) Restore other plant offsite (preferred) and onsite emergency power sources as soon as possible

(3) Recover plant HVAC Systems as soon as possible to limit heat rises

(4) Provide additional core, containment, and vital equipment makeup and cooling services, as necessary

(5) Establish orderly plant safe shutdown conditions

9.5.13.21 Quality Assurance Requirements for CTG

Quality assurance standards and practices shall be developed to assure continued operational reliability of the CTG as an AAC power source for SBO events, in accordance with Regulatory Guide 1.155 and 10CFR50.63.

9.5.14 Reference

9.5-1 Stello, Victor, Jr., "Design Requirements Related To The Evolutionary Advanced Light Water Reactors (ALWRS)", Policy Issue, SECY-89-013, The Commissioners, United States Nuclear Regulatory Commission, January 19, 1989.

9.5-2 Cote, Arthur E., "NFPA Fire Protection Handbook", National Fire Protection Association, Sixteenth Edition.

9.5-3 "Design of Smoke Control Systems for Buildings", American Society of Heating, Refrigerating, and Air Conditioning Engineers, Inc., September 1983.

9.5-4 "Recommended Practice for Smoke Control Systems", NFPA 92A, National Fire Protection Association, 1988.

9.5-5 Life Safety Code, NFPA 101, National Fire Protection Association.

9.5-6 "Reliability of Emergency Diesel Generators at U.S. Nuclear Power Plants", Electric Power Research Institute, NSAC-108, September 1986.

9.5-7 Loss of All Alternating Current Power, 10CFR50.63.

9.5-8 Regulatory Guide 1.155—Station Blackout.

9.5-9 "Guidelines and Technical Bases for NUMARC Initiatives Addressing Station Blackout at Light Water Reactors", NUMARC-87-00.

Table 9.5-1 Normal and/or Standby Lighting (Non-Class 1E AC Power Supply)

Location	Illumination Lux	Area
1. (RW control room) Operation desk (console panel)	538.2	Working level
Instrument on the perpendicular surface	538.2	Working level
Others	538.2	Floor level
2. Local control panels	538.2	Working Level
3. Instrument rooms, maintenance rooms, hot laboratory	538.2	Working level
4. Computer rooms, office, conference rooms, radiation administration rooms	322.9	Working level
5. Check points, FMCRD RIP maintenance room	322.9	Working level
6. Machining rooms, valve wrapping rooms	322.9	Working level
7. R/B operating floor	322.9	Floor level
8. Relay rooms, operator waiting room, dressing room, paging room	215.3	Working level
9. Sampling rack rooms	215.3	Working level
10. Electrical panel rooms, instrument rack rooms, diesel generator rooms	215.3	Working level
11. General machine area	215.3	Floor level
12. Equipment transfer area	107.6	Floor level
13. Machine area under low radiation	107.6	Floor level
14. Tank rooms	215.3	Floor level
15. Battery rooms, passages and stair cases with frequent access	215.3	Floor level
16. Inside drywell	107.6	Floor level
17. Condenser area, SGTS rooms	107.6	Floor level
18. HVAC rooms and elevator machine rooms	107.6	Floor level
19. (RW filter rooms, enrichment rooms) MSIV room	107.6	Floor level
20. Passages and staircases	53.8	Floor level
21. Rooms isolated with hatches where access is restricted to annual inspection	53.8	Floor level
22. Piping space	107.6	Floor level
23. The rooms where the access is very difficult	0	Floor level

Table 9.5-2 Lighting and Power Sources

Lighting	Normal Operation	Loss of Preferred Power (LOPP)	LOPP Plus Loss of CTG	LOPP Plus Loss of CTG Plus Loss of DGs	Loss of All AC Plus Loss of Station Batteries
Normal Lighting	X	–	–	–	–
Standby Lighting					
Non-Class 1E	X	X	–	–	–
Class 1E Associated	X	X	X	–	–
Emergency Lighting					
Non-Class 1E	X*	X†	X	X	–
Class 1E Associated	X*	X†	X†	X	–
Guide Lamps					
Non-Class 1E	X*	X†	X	X	X
Class 1E Associated	X*	X†	X†	X	X

* Available, but off while AC power is available.

† On only during the time required to energize the standby bus from the standby power source

Table 9.5-3 Standby Lighting (Class 1E AC Power Supply)

Area	Illumination Lux Working Level	Division of Power
Main control room	538.2	Division II and III
Safety-related electric equipment room DG control room, DG room, RSS room	215.3	Division of power supply is the same as the equipment's power supply.
Safety equipment area	21.5-53.8	Division of power supply is the same as the equipment's power supply.
Other areas of buildings	5–10% of standard illumination level	Divisional (for safety-related passage ways)

Table 9.5-4 DC Emergency Lighting

Area	Illumination Lux Floor Level*	Division of Power
Main Control Room	75.4	Div. II, III DC power supply
Div. I essential electric equipment room (RB)	75.4	Div. I DC power supply
Div. II essential electric equipment room (RB)	75.4	Div. II DC power supply
Div. III essential electric equipment room (RB)	75.4	Div. III DC power supply
Div. I diesel generator area and associated control room (RB)	75.4	Div. I DC power supply
Div. II diesel generator area and associated control room (RB)	75.4	Div. II DC power supply
Div III diesel generator area and associated control room (RB)	75.4	Div. III DC power supply
Div. I DC electrical equipment room (CB)	75.4	Div. I DC power supply
Div. II DC electrical equipment room (CB)	75.4	Div. II DC power supply
Div. III DC electrical equipment room (CB)	75.4	Div. III DC power supply
Div. IV DC electrical equipment room (CB)	75.4	Div. IV DC power supply
Div. I Remote Shutdown System control area (RB)	75.4	Div. I DC power supply
Div. II Remote Shutdown System control area (RB)	75.4	Div. II DC power supply
Radwaste control room (RW/B)	75.4	Non-div. DC power supply
Non-essential electric equipment rooms	75.4	Non-div. DC power supply
CTG room	75.4	Non-div. DC power supply

* Working areas in front of Class 1E panels containing instruments or controls shall be a minimum of 107.6 Lux measured 1 meter up from the floor level.

Table 9.5-5 Summary of Automatic Fire Suppression Systems

Bldg.	Elev	Room No.	Fire Area	Area Name	Div	Combustible	Sprinkler System Type
PY	7350	N/A	N/A	Unit Auxiliary Transformer	ND	Oil	Deluge water
PY	7350	N/A	N/A	Main Transformer Area	ND	Oil	Deluge water
PY	7350	N/A	N/A	Reserve Transformer	ND	Oil	Deluge water
RB	–8200	133	F1300	CRD Pump Room	ND	Class III B lube oil & cables	Dry pipe, closed head
RB	12300	412	F4100	Diesel Generator A Room	D1	Fuel oil, Lube oil, & cables	Preaction foam-water
RB	12300	423	F4200	Diesel Generator B Room	D2	Fuel oil, Lube oil, & cables	Preaction foam-water
RB	12300	432	F4300	Diesel Generator C Room	D3	Fuel oil, Lube oil, & cables	Preaction foam-water
RB	23500	610	F6101	Diesel Generator Fuel Tank A Room	D1	Diesel fuel	Deluge foam-water
RB	23500	620	F6201	Diesel Generator Fuel Tank B Room	D2	Diesel fuel	Deluge foam-water
RB	23500	630	F6301	Diesel Generator Fuel Tank C Room	D3	Diesel fuel	Deluge foam-water
RW	1600	N/A	N/A	Dry Radioactive Waste Storage Area	ND	Radioactive material	Wet pipe sprinkler
RW	7300	N/A	N/A	Dry Radioactive Waste Storage Area	ND	Radioactive material	Wet pipe sprinkler
RW	–200	N/A	N/A	Dry Radioactive Waste Storage Area	ND	Radioactive material	Wet pipe sprinkler
RW	–6500	N/A	N/A	Dry Radioactive Waste Storage Area	ND	Radioactive material	Wet pipe sprinkler
TB	350	120	FT1500	Beneath the Turbine surroundings	ND	Lubricants, charcoal & cables	Wet pipe sprinkler
TB	7350	222	FT1500	Beneath the Turbine Surroundings	ND	Lubricants, & cables	Wet pipe sprinkler
TB	7350	230	FT2500	Lube Oil Conditioning Area	ND	Class III B lube oil	Deluge foam-water
TB	7350	247	FT2503	House Boiler Area	ND	Lubricants, Fuel oil & cables	Preaction sprinkler
TB	15350	317	FT3500	Gas Turbine Generator	ND	Diesel fuel	Deluge foam-water

Table 9.5-5 Summary of Automatic Fire Suppression Systems (Continued)

Bldg.	Elev	Room No.	Fire Area	Area Name	Div	Combustible	Sprinkler System Type
TB	15350	320	FT1500	TCW Pumps Area	ND	Hydrogen seal oil	Deluge foam-water
TB	15350	321	FT1500	Beneath the Turbine Surroundings	ND	Lubricants, & cables	Wet pipe sprinkler
TB	15350	330	FT3501	Lube Oil Reservoir Area	ND	Class III B lube oil	Deluge foam-water

The following figure is located in Chapter 21:

Figure 9.5-1 Suppression Pool Cleanup System P&ID

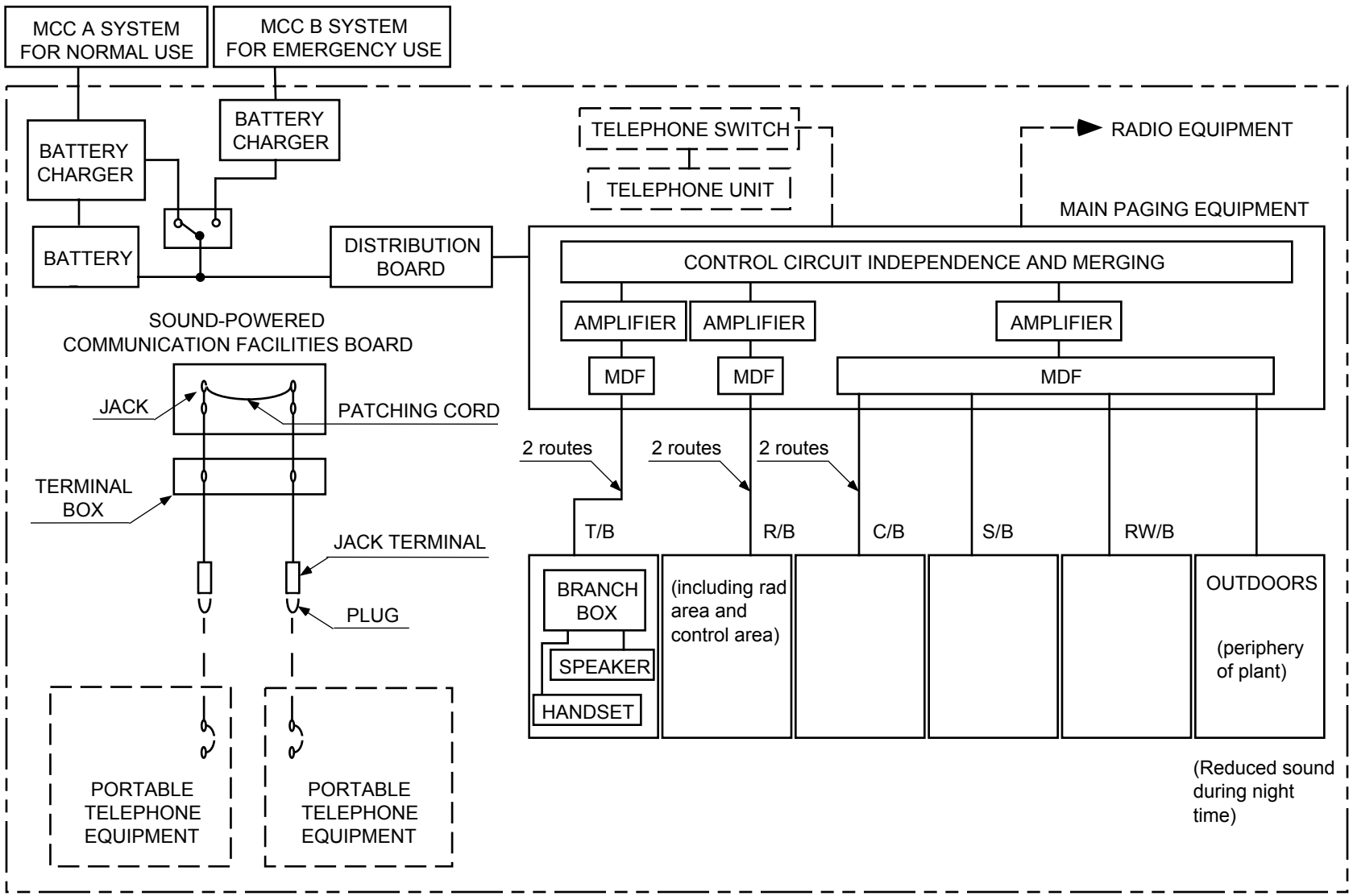

(NOTES) 1. MDF : MAIN DISTRIBUTING FRAME
2. SOLID LINES INDICATE THE EXTENT OF ABWR STANDARD PLANT SCOPE

Figure 9.5-2 Outline — Telephonic Communication Systems

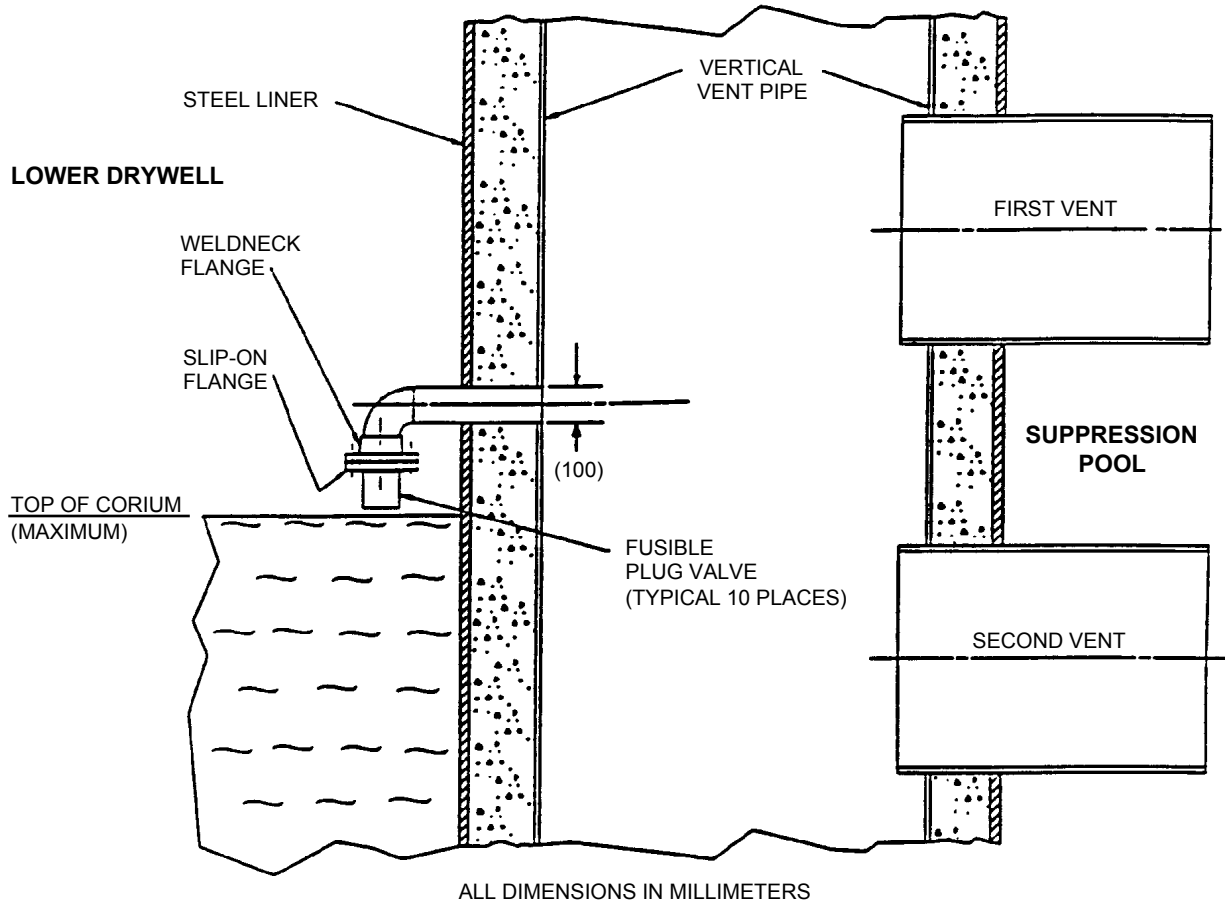

Figure 9.5-3 Lower Drywell Flooder System Arrangement/Configuration

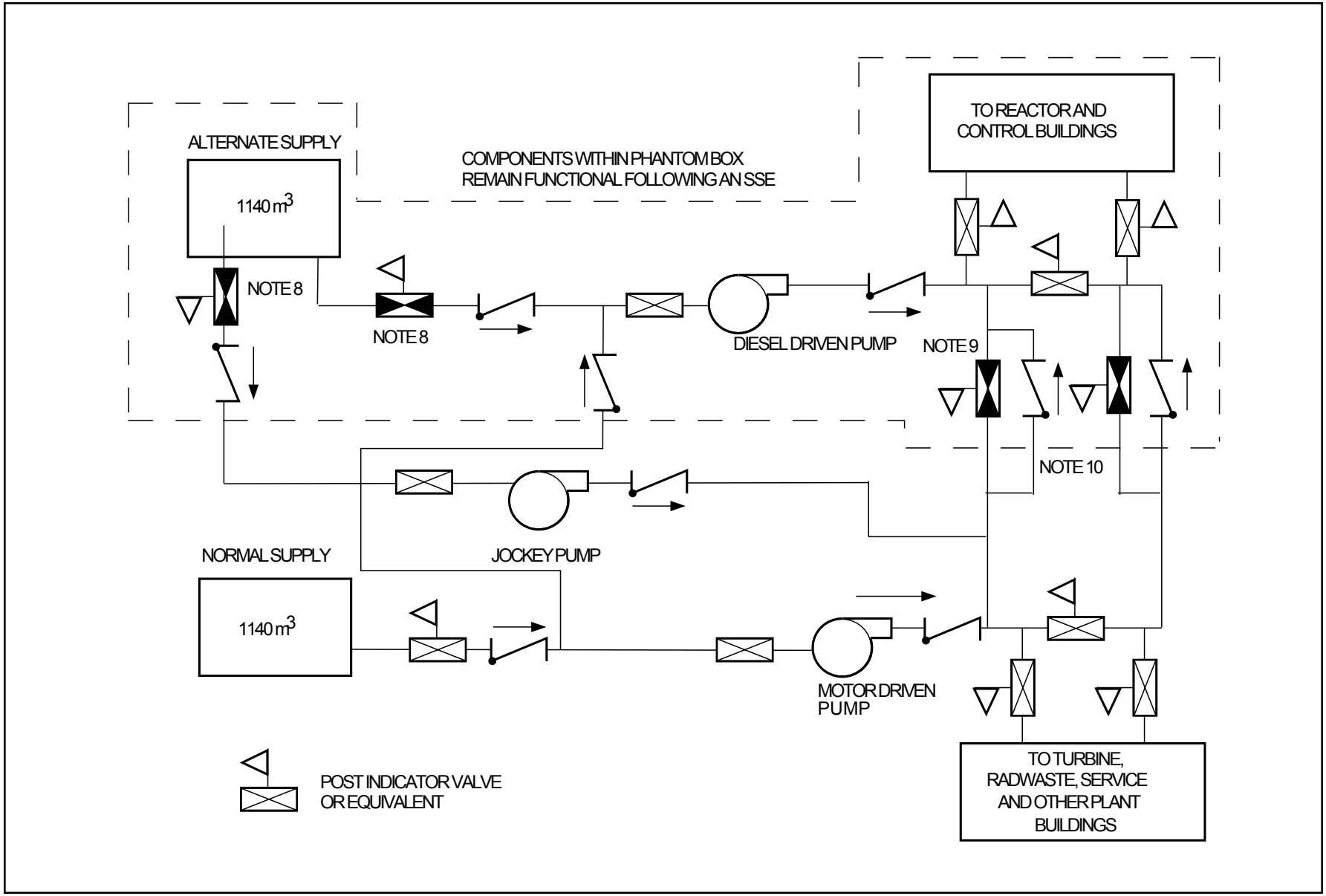

Figure 9.5-4 Fire Protection Water Supply System

Notes for Figure 9.5-4:

(1) The equivalent of one 100% capacity motor-driven pump and one 100% capacity diesel-driven pump shall be provided. the equivalent capacity of each type may be comprised of multiple pumps of that type.

(2) The motor-driven pumps shall be supplied power from the non-Class 1E busses.

(3) The following specific requirements apply to the components within the phantom box:

- (a) They shall be designed to remain functional following a safe shutdown earthquake.
- (b) The piping and valves as a minimum shall satisfy the requirements of ANSI B31.1.

(4) Each 100% capacity pumping unit and its controls shall be separated from the other pumping unit/units by a fire wall with a minimum rating of 3 hours.

(5) Alarms indicating pump running, driver availability, failure to start and low fire-main pressure shall be provided.

(6) The fire pump installation should conform to NFPA 20, "Standard for the Installation of Centrifugal Fire Pumps."

(7) The water supply shall meet the following requirements:

- (a) Fresh water free of silt and debris shall be used. Filters for makeup supply are acceptable.
- (b) Each supply shall have a minimum storage volume of 1140m^3.
- (c) If tanks or other limited volume storage means are used:
  - (i) There shall be two storage devices.
  - (ii) One storage device shall contain a passively dedicated volume of 456m^3 to supply two hose streams for two hours in areas required for safe shutdown.
  - (iii) The makeup supply shall be capable of providing 1140m^3 for either storage device in 8 hours.

(8) Normally closed valve, opened only to pump from the alternate supply.

(9) Normally closed valve, opened only when motor driven pump is out of service.

(10) Normally closed valve, opened only when a section of the piping connected to normal water supply is valved out for maintenance.

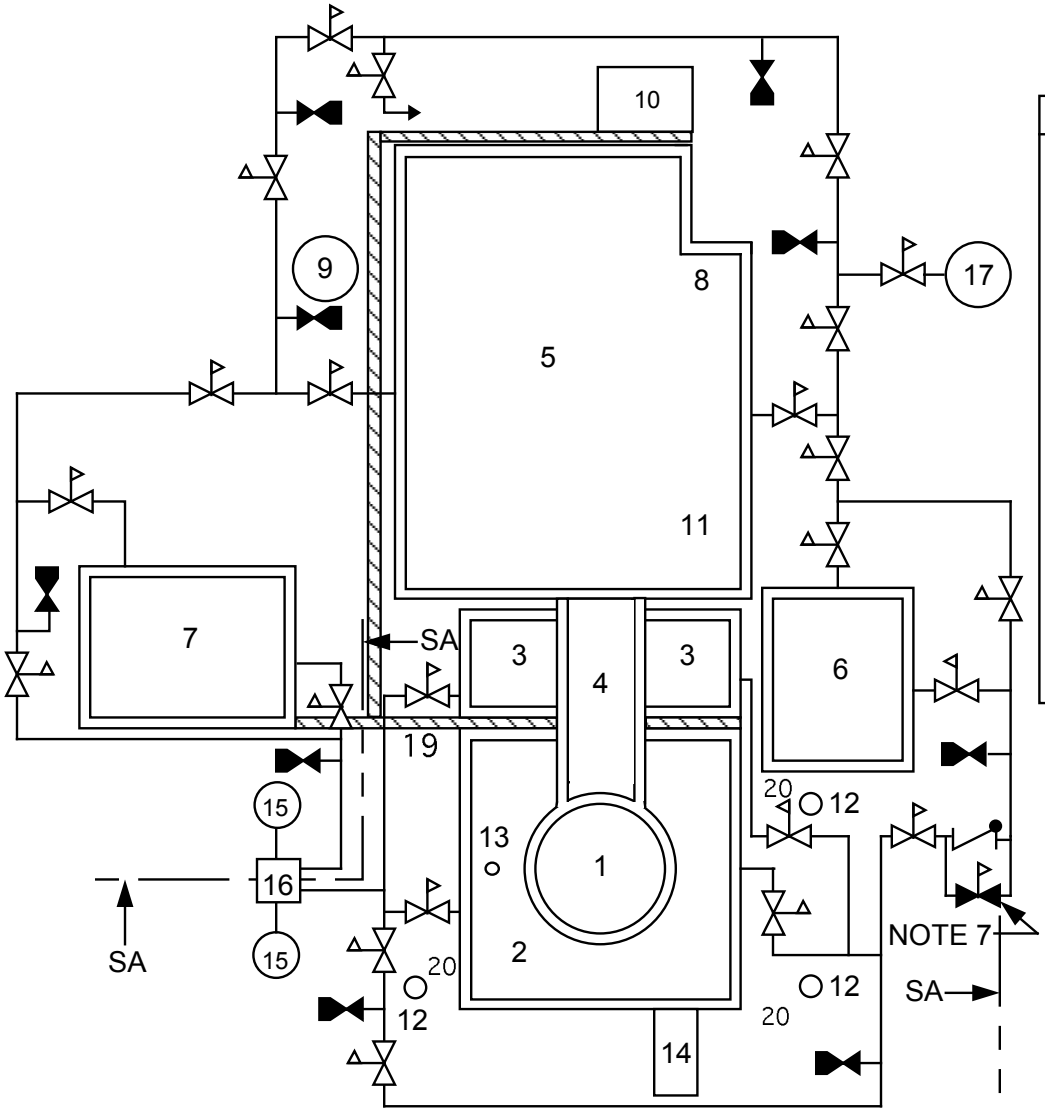

No.	FACILITY
1	REACTOR CONTAINMENT
2	REACTOR BUILDING
3	CONTROL BUILDING
4	MAIN STEAM/FEEDWATER TUNNEL
5	TURBINE BUILDING
6	SERVICE BUILDING
7	RADWASTE BUILDING
8	HOUSE BOILER
9	CONDENSATE STORAGE TANK
10	UNIT AUX. TRANSFORMER (3)
11	NORMAL SWITCHGEAR
12	DIESEL OIL STORAGE TANK (3)
13	STACK
14	EQUIPMENT ENTRY LOCK
15	FIRE PROTECTION WATER STORAGE TANK (2)
16	FIRE PROTECTION PUMPHOUSE
17	BUNKER FUEL TANK
18	COMBUSTION TURBINE GENERATOR
19	RADWASTE TUNNELS RB, CB, TB
20	DG OIL TRANSFER TUNNELS (3)

LEGEND:

Post Indicator Valve

Fire Hydrant & Shutoff Valve

SA Seismic Analysis for Safe Shutdown Earthquake

Figure 9.5-5 Fire Protection Yard Main Piping

Notes for Figure 9.5-5:

(1) NFPA 24. "Standard for Outside Protection," shall be used as guidance in designing and installing the yard fire main loop.

(2) The main loop shall be sectionalized with post-indicator valves, or their equivalent, such that any single section may be taken out of service for maintenance without disrupting the supply to any safety-related building.

(3) An individual isolation valve shall be provided for each outside hydrant so that it may be taken out of service for maintenance without interrupting the supply to any other load.

(4) The maximum spacing between outside hydrants shall be 76m.

(5) Hose houses, if used, shall have a maximum spacing of 228m.

(6) Threads compatible with those used by the local fire department should be provided on all hydrants, hose couplings and standpipe risers.

(7) Normally closed valve, opened only when a section of the non-seismically analyzed yard main is valved out for maintenance.

(8) Siamese fire department connections and backflow check valves are required at each building supply but are not shown.

The following figures are located in Chapter 21:

Figure 9.5-6 Standby Diesel Generator Fuel Oil and Intake and Exhaust System

Figure 9.5-7 Standby Diesel Generator Jacket Cooling Water System

Figure 9.5-8 Standby Diesel Generator Starting Air System

Figure 9.5-9 Standby Diesel Generator Lubricating Oil System

Appendix 9A
Table of Contents

List of Tables....9A.0-xi

List of Figures....9A.0-xiii
9A Fire Hazard Analysis....9A.1-1
9A.1 Introduction....9A.1-1
9A.2 Analysis Criteria....9A.2-1
9A.2.1 References....9A.2-1
9A.2.1.1 Codes and Standards....9A.2-1
9A.2.2 Drawings....9A.2-3
9A.2.2.1 Fire Area Separation and Fire Equipment Drawings....9A.2-3
9A.2.3 Terminology....9A.2-3
9A.2.4 Acceptance Criteria....9A.2-4
9A.2.5 Core Cooling System....9A.2-6
9A.3 Analysis Approach....9A.3-1
9A.3.1 Review Data....9A.3-1
9A.3.2 Not Used....9A.3-2
9A.3.3 Separation....9A.3-2
9A.3.4 Insulation Fire Hazard....9A.3-2
9A.3.5 Exceptions to Penetrations Requirements....9A.3-2
9A.3.6 Wall Deviations....9A.3-3
9A.3.7 Door Deviations....9A.3-3
9A.4 Analysis....9A.4-1
9A.4.1 Reactor Building....9A.4-1
9A.4.1.1 Reactor Bldg El –8200mm....9A.4-1
9A.4.1.1.1 Lower Drywell (Rm No. 191)....9A.4-1
9A.4.1.1.2 Wet Well (Rm No. 190)....9A.4-3
9A.4.1.1.3 RHR Pump Room A (Rm No. 110)....9A.4-4
9A.4.1.1.4 RCIC Room A (Rm No. 112)....9A.4-6
9A.4.1.1.5 Corridor A (Rm No. 115/131)....9A.4-9
9A.4.1.1.6 Quadrant 1 Corridor (Rm No. 116)....9A.4-11
9A.4.1.1.7 CRD HCU Quadrant I/IV (Rm No. 117)....9A.4-13
9A.4.1.1.8 Not Used....9A.4-15
9A.4.1.1.9 Quadrant A Sump Room (Rm No. 119)....9A.4-15
9A.4.1.1.10 Stair #1 (Rm No. 195)....9A.4-17
9A.4.1.1.11 Elevator #1 (Rm No. 192)....9A.4-18
9A.4.1.1.12 HPCF Room C (Rm No. 130)....9A.4-20
9A.4.1.1.13 RHR Pump Room C (Rm No. 132)....9A.4-22
9A.4.1.1.14 Not Used....9A.4-24
9A.4.1.1.15 CRD Pump Room (Rm No. 133)....9A.4-24
9A.4.1.1.16 CRD HCU Quadrant 11/111 Room (Rm No. 126)....9A.4-26
9A.4.1.1.17 Not Used....9A.4-28
9A.4.1.1.18 Corridor B (Rm No. 123/134)....9A.4-28
9A.4.1.1.19 Quadrant B Sump Room (Rm No. 124)....9A.4-30
9A.4.1.1.20 Stair #3 (Rm No. 193)....9A.4-32
9A.4.1.1.21 Elevator #2 (Rm No. 194)....9A.4-34
9A.4.1.1.22 RHR Pump Room B (Rm No. 121)....9A.4-35
9A.4.1.1.23 HPCF Pump Room B (Rm No. 122)....9A.4-37
9A.4.1.1.24 Not Used....9A.4-39

Table of Contents (Continued)

9A.4.1.1.25 CUW Nonregen Hx (Rm No. 141) 9A.4-39
9A.4.1.1.26 SPCU Pump Room (Rm No. 140) 9A.4-41
9A.4.1.1.27 Not Used 9A.4-43
9A.4.1.1.28 Not Used 9A.4-43
9A.4.1.1.29 CUW Pump B Room (Rm No. 146) 9A.4-43
9A.4.1.1.30 CUW Pump A Room (Rm No. 147) 9A.4-44
9A.4.1.1.31 CUW Pump Maintenance Area (Rm No. 148) 9A.4-46
9A.4.1.1.32 Corridor D (Rm No. 142) 9A.4-47
9A.4.1.1.33 Backwash Transfer Pump Room (Rm No. 149) 9A.4-50
9A.4.1.1.34 CUW Backwash Tank Room (Rm No. 144) 9A.4-51
9A.4.1.1.35 Not Used 9A.4-53
9A.4.1.1.36 Not Used 9A.4-53
9A.4.1.1.37 Instrument Rack Room, Division 4 (Rm No. 111) 9A.4-53
9A.4.1.1.38 Instrument Rack Room, Division I (Rm No. 118) 9A.4-55
9A.4.1.1.39 Division II Instrument Rack Room (Rm No. 125) 9A.4-57
9A.4.1.1.40 Division III Instrument Rack Room (Rm No. 129) 9A.4-59
9A.4.1.1.41 CUW Valve and Pipe Space (Rm No. 143) 9A.4-61
9A.4.1.2 Building – Reactor Bldg El – 1700mm 9A.4-62
9A.4.1.2.1 Lower Drywell (Rm No. 291) 9A.4-62
9A.4.1.2.2 Wetwell (Rm No. 290) 9A.4-63
9A.4.1.2.3 Corridor A (Rm No. 210) 9A.4-63
9A.4.1.2.4 RHR (A)/RCIC Pipe Space (Rm No. 212) 9A.4-65
9A.4.1.2.5 Lower Drywell Personnel Access (Rm No. 211) 9A.4-67
9A.4.1.2.6 HCU Pipe Space A (Rm No. 213) 9A.4-68
9A.4.1.2.7 HCU Pipe Space D (Rm No. 214) 9A.4-70
9A.4.1.2.8 TIP Room (Rm No. 215) 9A.4-72
9A.4.1.2.9 TIP Shield Room (Rm No. 216) 9A.4-74
9A.4.1.2.10 SPCU Pipe Space (Rm No. 217) 9A.4-76
9A.4.1.2.11 TIP Area Landing (Rm No. 218) 9A.4-77
9A.4.1.2.12 HPCF (C)/RHR (C) Pipe Space (Rm No. 230) 9A.4-79
9A.4.1.2.13 Maintenance Area C (Rm No. 231) 9A.4-81
9A.4.1.2.14 FMCRD Panel Room (Rm No. 220) 9A.4-83
9A.4.1.2.15 FMCRD Maintenance Room (Rm No. 225/233) 9A.4-84
9A.4.1.2.16 Not Used 9A.4-86
9A.4.1.2.17 Lower Drywell Equipment Access (Rm No. 223) 9A.4-86
9A.4.1.2.18 Not Used 9A.4-88
9A.4.1.2.19 Not Used 9A.4-88
9A.4.1.2.20 Corridor B/C (Rm No. 224/234) 9A.4-88
9A.4.1.2.21 Not Used 9A.4-90
9A.4.1.2.22 Corridor and Maintenance Area B (Rm No. 221) 9A.4-90
9A.4.1.2.23 HPCF (B)/RHR (B) Pipe Space (Rm No. 222) 9A.4-92
9A.4.1.2.24 (Rm No. 242) 9A.4-94
9A.4.1.2.25 Not Used 9A.4-95
9A.4.1.2.26 Not Used 9A.4-95
9A.4.1.2.27 Not Used 9A.4-95
9A.4.1.2.28 Not Used 9A.4-95
9A.4.1.2.29 CUW Regen Hx, Valve and Pipe Room (Rm No. 241) 9A.4-95

Table of Contents (Continued)

9A.4.1.2.30 Not Used 9A.4-97
9A.4.1.2.31 Radioactive Drain Valve Room (Rm No. 251) 9A.4-97
9A.4.1.2.32 Corridor D (Rm No. 244) 9A.4-98
9A.4.1.2.33 Vacuum Cleaning Room (Rm No. 219) 9A.4-100
9A.4.1.2.34 FPC Holding Pump and F/D Valve Room (Rm No. 248) 9A.4-101
9A.4.1.2.35 CUW Holding Pump Rooms A and B (Rm No. 243) 9A.4-103
9A.4.1.3 Building – Reactor Bldg El 4800mm 9A.4-105
9A.4.1.3.1 Lower Drywell (Rm No. 391) 9A.4-105
9A.4.1.3.2 Wet Well (Rm No. 390) 9A.4-105
9A.4.1.3.3 Emergency Electric Room A (Rm No. 310) 9A.4-105
9A.4.1.3.4 Corridor A (Rm No. 311) 9A.4-107
9A.4.1.3.5 Suppression Pool Personnel Entry Hatch (Rm No. 312) 9A.4-109
9A.4.1.3.6 Pipe Space A (Rm No. 313) 9A.4-110
9A.4.1.3.7 Instrument Rack (I) (Rm No. 314) 9A.4-112
9A.4.1.3.8 RIP Panel Room (Rm No. 315) 9A.4-114
9A.4.1.3.9 Stair #2 (Rm No. 316) 9A.4-116
9A.4.1.3.10 Elevator #2 (Rm No. 317) 9A.4-118
9A.4.1.3.11 Instrument Rack (III) Room (Rm No. 332) 9A.4-119
9A.4.1.3.12 Pipe Space C (Rm No. 333) 9A.4-121
9A.4.1.3.13 Corridor C (Rm No. 335) 9A.4-123
9A.4.1.3.14 Quadrant A Storm Drain Sump Room (Rm No. 336) ..9A.4-125
9A.4.1.3.15 RIP Panel Room (Rm No. 331) 9A.4-126
9A.4.1.3.16 Emergency Electrical Room C (Rm No. 337) 9A.4-128
9A.4.1.3.17 Corridor B (Rm No. 321) 9A.4-130
9A.4.1.3.18 Sump Room (Rm No. 322) 9A.4-132
9A.4.1.3.19 Pipe Space B (Rm No. 324) 9A.4-133
9A.4.1.3.20 RPV Instrument Rack (II) Room (Rm No. 323) 9A.4-135
9A.4.1.3.21 Emergency Electrical Room B (Rm No. 326) 9A.4-137
9A.4.1.3.22 RIP Panel Room (Rm No. 320) 9A.4-138
9A.4.1.3.23 Stair #4 (Rm No. 329) 9A.4-140
9A.4.1.3.24 Elevator #4 (Rm No. 328) 9A.4-142
9A.4.1.3.25 RPV Instrument Rack (IV) Room (Rm No. 345) 9A.4-143
9A.4.1.3.26 Not Used 9A.4-145
9A.4.1.3.27 Corridor D (Rm No. 344) 9A.4-145
9A.4.1.3.28 RIP Panel A Room (Rm No. 340) 9A.4-147
9A.4.1.3.29 Remote Shutdown Panel Room B (Rm No. 383) 9A.4-149
9A.4.1.3.30 Remote Shutdown Panel Room A (Rm No. 341) 9A.4-150
9A.4.1.3.31 Corridor A Extension (Rm No. 342) 9A.4-152
9A.4.1.3.32 Pipe Space (Rm No. 318) 9A.4-154
9A.4.1.3.33 Pipe Space Room (Rm No. 330) 9A.4-156
9A.4.1.3.34 Penetration Room (Rm No. 325) 9A.4-158
9A.4.1.3.35 Valve Room B, and Pipe Space B (Rm No. 327/348) ...9A.4-160
9A.4.1.3.36 Reactor Water Sampling Rack Room (Rm No. 349) 9A.4-161
9A.4.1.3.37 Filter Demineralizer Area (Rm No. 347) 9A.4-163

Table of Contents (Continued)

9A.4.1.3.38 Division 4 Remote Multiplexing Room (Rm No. 381) 9A.4-163
9A.4.1.3.39 Reactor Water Sampling Rack Room (Rm No. 380) 9A.4-165
9A.4.1.3.40 FPC FD Rack Room (Rm No. 346) 9A.4-167
9A.4.1.4 Building – Reactor Bldg El 12300mm 9A.4-169
9A.4.1.4.1 Upper Drywell (Rm No. 491) 9A.4-169
9A.4.1.4.2 North Controlled Entry and Corridor A (Rm No. 410) 9A.4-171
9A.4.1.4.3 E and I Penetration Room (Division 1) (Rm No. 411) 9A.4-173
9A.4.1.4.4 Diesel Generator A Room (Rm No. 412) 9A.4-174
9A.4.1.4.5 Clean Area Access A/C (Rm No. 413) 9A.4-177
9A.4.1.4.6 ECCS Valve A Room (Rm No. 414) 9A.4-179
9A.4.1.4.7 ECCS Valve C Room (Rm No. 431) 9A.4-181
9A.4.1.4.8 Corridor C (Equipment Entry) (Rm No. 430) 9A.4-182
9A.4.1.4.9 E and I Penetration Room (Div 3) (Rm No. 433) 9A.4-185
9A.4.1.4.10 Diesel Generator C Room (Rm No. 432) 9A.4-186
9A.4.1.4.11 Flammability Control System Room (Div 3) (Rm No. 436) 9A.4-189
9A.4.1.4.12 Corridor B (Rm No. 420) 9A.4-190
9A.4.1.4.13 E and I Penetration Room (Rm No. 424) 9A.4-192
9A.4.1.4.14 Not Used 9A.4-194
9A.4.1.4.15 Diesel Generator B Room (Rm No. 423) 9A.4-194
9A.4.1.4.16 ECCS Valve B Room (Rm No. 421) 9A.4-196
9A.4.1.4.17 Clean Area Access B/D (Rm No. 426) 9A.4-198
9A.4.1.4.18 E and I Penetration Room (Div 4) (Rm No. 444) 9A.4-199
9A.4.1.4.19 South Controlled Entry and Corridor (Rm No. 445) 9A.4-201
9A.4.1.4.20 CUW Valve Room (Rm No. 443) 9A.4-203
9A.4.1.4.21 Not Used 9A.4-205
9A.4.1.4.22 PASS Rack Room (Rm No. 441) 9A.4-205
9A.4.1.4.23 Filter/Demineralizer Access Room (Rm No. 447) 9A.4-206
9A.4.1.4.24 Filter/Demineralizer Pre Coat Room (Rm No. 441) 9A.4-208
9A.4.1.4.25 Not Used 9A.4-210
9A.4.1.4.26 Steam Tunnel (Rm No. 440) 9A.4-210
9A.4.1.4.27 Flammability Control System Room (Rm No. 425) 9A.4-211
9A.4.1.4.28 E and I Electrical Penetration Room (Rm No. 435) 9A.4-213
9A.4.1.5 Building – Reactor Bldg El 18100mm 9A.4-215
9A.4.1.5.1 Corridor A (Rm No. 510) 9A.4-215
9A.4.1.5.2 D/G Fan and HVAC Room (Rm No. 514) 9A.4-217
9A.4.1.5.3 Exhaust Duct A (Rm No. 515) 9A.4-218
9A.4.1.5.4 DG Control Panel A (Rm No. 516) 9A.4-220
9A.4.1.5.5 Steam Tunnel Entry Room (Rm No. 512) 9A.4-222
9A.4.1.5.6 Corridor C (Rm No. 530) 9A.4-224
9A.4.1.5.7 U/D Equipment Hatch (Rm No. 531) 9A.4-226
9A.4.1.5.8 DG Control Panel C Room (Rm No. 536) 9A.4-227
9A.4.1.5.9 D/G Fan and HVAC Room (Rm No. 533) 9A.4-229
9A.4.1.5.10 Exhaust Duct C Room (Rm No. 534) 9A.4-231
9A.4.1.5.11 Not Used 9A.4-232
9A.4.1.5.12 Corridor B (Rm No. 520) 9A.4-232

Table of Contents (Continued)

9A.4.1.5.13 U/D Personnel Hatch (Rm No. 521) 9A.4-234
9A.4.1.5.14 D/G Fan and HVAC Room B (Rm No. 522) 9A.4-236
9A.4.1.5.15 Exhaust Duct B Room (Rm No. 523) 9A.4-237
9A.4.1.5.16 DG Control Panel B (Rm No. 524) 9A.4-240
9A.4.1.5.17 Not Used 9A.4-241
9A.4.1.5.18 Not Used 9A.4-241
9A.4.1.5.19 Electrical Penetration Room (Rm No. 543) 9A.4-241
9A.4.1.5.20 FPC Valve Room (Rm No. 542) 9A.4-243
9A.4.1.5.21 FPC Pump Room (Rm No. 546) 9A.4-245
9A.4.1.5.22 Not Used 9A.4-246
9A.4.1.5.23 Not Used 9A.4-246
9A.4.1.5.24 Not Used 9A.4-246
9A.4.1.5.25 Not Used 9A.4-246
9A.4.1.5.26 FPC Heat Exchanger Room (Rm No. 544) 9A.4-246
9A.4.1.5.27 Instrument Piping Penetration Room (Rm No. 511) ...9A.4-248
9A.4.1.5.28 Clean Area Access Room (Rm No. 517) 9A.4-250
9A.4.1.5.29 Division 1 Electrical Penetration Room (Rm No. 518).9A.4-251
9A.4.1.5.30 Service Corridor B (Rm No. 527) 9A.4-253
9A.4.1.5.31 Division 2 Electrical Penetration Room (Rm No. 528).9A.4-255
9A.4.1.5.32 Division 3 Electrical Penetration Room (Rm No. 532).9A.4-256
9A.4.1.5.33 Pits and Pools (Rm No. 538, 539) 9A.4-258
9A.4.1.5.34 RIP Transformer Room (Rm No. 541) 9A.4-258
9A.4.1.5.35 FPC Heat Exchanger Room (Rm No. 545) 9A.4-260
9A.4.1.5.36 Corridor D (Rm No. 547) 9A.4-261
9A.4.1.5.37 Upper Drywell (Rm No. 591) 9A.4-263
9A.4.1.6 Building – Reactor Bldg El 23500mm and 27200mm.....9A.4-263
9A.4.1.6.1 Cross Corridor A (Rm No. 614) 9A.4-263
9A.4.1.6.2 D/G Fuel Day Tank A Room (Rm No. 610) 9A.4-265
9A.4.1.6.3 AC Filter/Fan Area (Rm No. 615) 9A.4-267
9A.4.1.6.4 D/G (A) Equipment Room (Rm No. 613) 9A.4-269
9A.4.1.6.5 D/G (A)/Z HVAC Room (Rm No. 612) 9A.4-270
9A.4.1.6.6 SRV/MSIV Maintenance Room (Rm No. 616) 9A.4-272
9A.4.1.6.7 ISI Test Room (Rm No. 617) 9A.4-274
9A.4.1.6.8 D/G (C) Equipment Room (Rm No. 633) 9A.4-276
9A.4.1.6.9 D/G (C)/Z HVAC Room (Rm No. 632) 9A.4-277
9A.4.1.6.10 D/G Fuel Day Tank C Room (Rm No. 630) 9A.4-279
9A.4.1.6.11 Hatch and Corridor B/C Room (Rm No. 634) 9A.4-281
9A.4.1.6.12 Corridor B SLC Area (Rm No. 622) 9A.4-283
9A.4.1.6.13 D/G Fuel Day Tank Room B (Rm No. 620) 9A.4-285
9A.4.1.6.14 D/G (B) Equipment Room (Rm No. 625) 9A.4-286
9A.4.1.6.15 D/G (B)/Z HVAC Room (Rm No. 624) 9A.4-288
9A.4.1.6.16 ISI Inspection (Rm No. 639) 9A.4-290
9A.4.1.6.17 Not Used 9A.4-291
9A.4.1.6.18 Not Used 9A.4-291
9A.4.1.6.19 Corridor D (Rm No. 643) 9A.4-291
9A.4.1.6.20 SGTS B Division 2 Room (Rm No. 641) 9A.4-293
9A.4.1.6.21 SGTS A Division 3 Room (Rm No. 642) 9A.4-295

Table of Contents (Continued)

9A.4.1.6.22 Not Used 9A.4-297
9A.4.1.6.23 Not Used 9A.4-297
9A.4.1.6.24 Upper D/G A HVAC Room (Rm No. 653) 9A.4-297
9A.4.1.6.25 FMCRD A/C Panel Room (Rm No. 654) 9A.4-298
9A.4.1.6.26 Not Used 9A.4-300
9A.4.1.6.27 Not Used 9A.4-300
9A.4.1.6.28 Not Used 9A.4-300
9A.4.1.6.29 Not Used 9A.4-300
9A.4.1.6.30 Upper D/G C HVAC Room (Rm No. 673) 9A.4-300
9A.4.1.6.31 Not Used 9A.4-302
9A.4.1.6.32 Upper D/G B HVAC Room (Rm No. 663) 9A.4-302
9A.4.1.6.33 Upper Corridor B (Rm No. 626) 9A.4-304
9A.4.1.6.34 Not Used 9A.4-306
9A.4.1.6.35 FMCRD D/B Panel Room (Rm No. 681) 9A.4-306
9A.4.1.6.36 Not Used 9A.4-307
9A.4.1.6.37 Not Used 9A.4-307
9A.4.1.6.38 MS Tunnel HVH Room (Rm No. 685) 9A.4-307
9A.4.1.6.39 Pits and Pools 9A.4-309
9A.4.1.6.40 PVC Purge Exhaust Fan (Rm No. 623) 9A.4-310
9A.4.1.6.41 D/G C Corridor Room (Rm No. 635) 9A.4-311
9A.4.1.6.42 RIP Power Supply Room (Rm No. 638) 9A.4-312
9A.4.1.6.43 Electrical Equipment Room (Rm No. 640) 9A.4-314
9A.4.1.6.44 Fission Product Monitoring (Rm No. 657) 9A.4-315
9A.4.1.6.45 Room No. 658 ....9A.4-317
9A.4.1.6.46 Containment Atmospheric Monitoring System (CAMS) Rack A (Rm No. 659) 9A.4-318
9A.4.1.6.47 Electrical Room (Rm No. 680) 9A.4-320
9A.4.1.6.48 Not Used 9A.4-322
9A.4.1.6.49 Containment Atmospheric Monitoring System (CAMS) Rack B (Rm No. 621) 9A.4-322
9A.4.1.6.50 Not Used 9A.4-324
9A.4.1.7 Building – Reactor Bldg EI 31700mm 9A.4-324
9A.4.1.7.1 Reactor Building Operating Deck (Rm No. 716) 9A.4-324
9A.4.1.7.2 RIP (A) Supply Fan and RCW (C) Surge Tank (Rm No. 715) 9A.4-326
9A.4.1.7.3 Not Used 9A.4-328
9A.4.1.7.4 DG (C) Exhaust Fan Room (Rm No. 730) 9A.4-328
9A.4.1.7.5 Not Used 9A.4-329
9A.4.1.7.6 RIP (B) Supply Fan and RCW (B) Surge Tank (Rm No. 740) 9A.4-329
9A.4.1.7.7 Access Service Area (Rm No. 764) 9A.4-331
9A.4.1.7.8 Refueling Machine Control Room (Rm No. 760) 9A.4-333
9A.4.1.7.9 Gallery (Rm No. 762) 9A.4-334
9A.4.1.7.10 Mezzanine Corridor (Rm No. 761) 9A.4-336
9A.4.1.7.11 Roof A/C Area (Rm No. 810 and 830) 9A.4-337

Table of Contents (Continued)

9A.4.1.7.12 Roof B/D Area (Rm No. 820 and 840) 9A.4-339
9A.4.1.7.13 RCW (A) Surge Tank (Rm No. 710) 9A.4-340
9A.4.1.7.14 Periodic Inspection Room (Rm No. 720) 9A.4-342
9A.4.1.7.15 RIP Repair Room (Rm No. 723) 9A.4-343
9A.4.1.7.16 Refuel Machine Control Room HVH (Rm No. 722) 9A.4-345
9A.4.1.7.17 Standby Gas Treatment System Pipe Space Room (Rm No. 741) 9A.4-346
9A.4.1.7.18 HVAC Supply Duct Room (Rm No. 711) 9A.4-348
9A.4.1.7.19 Elevator Equipment Room (Rm No. 811) 9A.4-350
9A.4.1.7.20 Elevator Equipment Room (Rm No. 821) 9A.4-351
9A.4.2 Control Building 9A.4-353
9A.4.2.1 Floor One EI –8200mm and –2150mm 9A.4-353
9A.4.2.1.1 RCW “A” (Rm No. 111) 9A.4-353
9A.4.2.1.2 Passageway (Rm No. 112) 9A.4-355
9A.4.2.1.3 RCW “B” (Rm No. 121) 9A.4-357
9A.4.2.1.4 Passageway (Rm No. 122) 9A.4-360
9A.4.2.1.5 RCW “C”, (Rm No. 131) 9A.4-362
9A.4.2.1.6 Passageway (Rm No. 132) 9A.4-364
9A.4.2.2 Floor Two EI –2150mm 9A.4-366
9A.4.2.2.1 Passageway (Rm No. 211) 9A.4-366
9A.4.2.2.2 Passageway (Rm No. 221) 9A.4-368
9A.4.2.2.3 Passageway (Rm No. 231) 9A.4-370
9A.4.2.3 Floor Three EI 3500mm 9A.4-371
9A.4.2.3.1 250 VDC Battery Room (Rm No. 313) 9A.4-371
9A.4.2.3.2 Passageway (Rm No. 312) 9A.4-373
9A.4.2.3.3 Non-Divisional Electrical Equipment Room (Rm No. 311) 9A.4-375
9A.4.2.3.4 Passageway (Rm No. 314) 9A.4-377
9A.4.2.3.5 Battery Room Div 2 (Rm No. 322) 9A.4-379
9A.4.2.3.6 Division 2 Electrical Equipment Room (Rm No. 323) ... 9A.4-380
9A.4.2.3.7 Division 4 Electrical Equipment Room (Rm No. 342) ... 9A.4-382
9A.4.2.3.8 Battery Room Division 4 (Rm No. 341) 9A.4-384
9A.4.2.3.9 Passageway (Rm No. 343) 9A.4-386
9A.4.2.3.10 Passageway (Rm No. 321) 9A.4-388
9A.4.2.3.11 Division 2 HVAC Chase (Rm No. 324) 9A.4-390
9A.4.2.3.12 Battery Room Division 1 (Rm No. 316) 9A.4-392
9A.4.2.3.13 Division 1 Electrical Equipment Room (Rm No. 317) 9A.4-394
9A.4.2.3.14 Division 1 HVAC Chase (Rm No. 319) 9A.4-396
9A.4.2.3.15 Battery Room Division 3 (Rm No. 332) 9A.4-397
9A.4.2.3.16 Division 3 Elect. Equipment Room (Rm No. 331) 9A.4-399
9A.4.2.3.17 Division 3 HVAC Chase (Rm No. 335) 9A.4-401
9A.4.2.3.18 Passageway (Rm No. 333) 9A.4-403
9A.4.2.3.19 Passageway (Rm No. 318) 9A.4-405
9A.4.2.3.20 Passageway (Rm No. 315) 9A.4-406
9A.4.2.3.21 Stairwell (Rm No. 325) 9A.4-408
9A.4.2.3.22 Stairwell (Rm No. 336) 9A.4-410

Table of Contents (Continued)

9A.4.2.3.23 Elevator (Rm No. 337) 9A.4-412
9A.4.2.4 Floor Four El 7900mm 9A.4-413
9A.4.2.4.1 Control Room Complex 9A.4-413
9A.4.2.5 Floor Five El 12300mm 9A.4-417
9A.4.2.5.1 Control Room HVAC "B" Exhaust Duct Chase (Rm No. 522) 9A.4-417
9A.4.2.5.2 HVAC "A" Supply (Rm Nos. 511, 512 and 513) 9A.4-419
9A.4.2.5.3 HVAC "C" Supply (Rm Nos. 531, 532 and 533) 9A.4-421
9A.4.2.5.4 Stairwell Landing (Rm No. 505) 9A.4-423
9A.4.2.5.5 Chiller Unit "C" (Rm No. 534) 9A.4-425
9A.4.2.5.6 Recirc Internal Pump MG Sets and Control Panels (Rm Nos. 501, 502, 503 and 504) 9A.4-427
9A.4.2.5.7 Computer Room (Rm No. 591) 9A.4-429
9A.4.2.5.8 Passageway (Rm No. 521) 9A.4-431
9A.4.2.5.9 Not Used 9A.4-433
9A.4.2.5.10 Passageway (Rm No. 592) 9A.4-433
9A.4.2.5.11 Passageways (Rm No. 593) 9A.4-435
9A.4.2.5.12 Control Room HVAC "C", Exhaust Duct Chase (Rm No. 595) 9A.4-437
9A.4.2.5.13 Passageway (Rm No. 506) 9A.4-438
9A.4.2.6 Floor Six EI 17150mm 9A.4-440
9A.4.2.6.1 Control Room HVAC Supply "B" (Rm No. 621) 9A.4-440
9A.4.2.6.2 Passageway and Room (Rm No. 622 and 662) 9A.4-442
9A.4.2.6.3 Chiller Unit "B" (Rm No. 623) 9A.4-444
9A.4.2.6.4 HVAC "B" Supply and Exhaust (Rm Nos. 624, 625, 627, 661, and 664) 9A.4-446
9A.4.2.6.5 HVAC "A" Intake Duct and Exhaust (Rm Nos. 613, 617, 618 and 619) 9A.4-448
9A.4.2.6.6 Control Room HVAC Exhaust "B" (Rm Nos. 626) 9A.4-450
9A.4.2.6.7 Chiller Unit "A" (Rm No. 612) 9A.4-452
9A.4.2.6.8 Control Room HVAC Supply "C" (Rm No. 615) 9A.4-454
9A.4.2.6.9 Passageway and Room (Rm Nos. 611 and 652) 9A.4-456
9A.4.2.6.10 Control Room HVAC Exhaust "C" (Rm Nos. 614) 9A.4-458
9A.4.2.6.11 HVAC "C" Intake Duct and Exhaust (Rm Nos. 631, 632, 633, 634, 651, and 653) 9A.4-460
9A.4.3 Turbine Building 9A.4-462
9A.4.3.1 Floor One EI 5.3m 9A.4-462
9A.4.3.1.1 Floor One (Except Fire Areas FT 1501-FT1503) 9A.4-462
9A.4.3.1.2 Air Compressors and Dryer Area (Rm No. 111) 9A.4-466
9A.4.3.1.3 Stair Tower #1 (Rm No. 114) 9A.4-467
9A.4.3.1.4 Stair Tower #2 (Rm No. 122) 9A.4-469
9A.4.3.2 Floor Two El 12.3m 9A.4-470
9A.4.3.2.1 Floor Two (Except Fire Areas FT-1501, FT 2500–FT2505) 9A.4-470

Table of Contents (Continued)

9A.4.3.2.2 Switchgear "A" Area (Rm No. 210), and Chillers Area (Rm No. 248) 9A.4-473
9A.4.3.2.3 Lube Oil Conditioning Area (Rm No. 230) 9A.4-475
9A.4.3.2.4 Stair Tower #5 (Rm No. 236) 9A.4-476
9A.4.3.2.5 Stair Tower #3 (Rm No. 212) 9A.4-478
9A.4.3.2.6 House Boiler Area (Rm No. 247) 9A.4-479
9A.4.3.2.7 Stair Tower #4 (Rm No. 249) 9A.4-482
9A.4.3.2.8 Steam Tunnel Area (Rm No. 219) 9A.4-483
9A.4.3.3 Floor Three EI 20.3m 9A.4-485
9A.4.3.3.1 Floor Three (Except Fire Areas FT 1501, FT 3500, and FT 3501) 9A.4-485
9A.4.3.3.2 Switchgear "B" Area (Rm No. 310) 9A.4-488
9A.4.3.3.3 Gas Turbine Generator Area (Rm No. 317) 9A.4-489
9A.4.3.3.4 Oil Reservoir Area (Rm No. 330) 9A.4-491
9A.4.3.4 Floor Four EI 30.3m 9A.4-493
9A.4.4 Service Building 9A.4-495
9A.4.4.1 General 9A.4-495
9A.4.4.2 Facility Features 9A.4-495
A.4.4.3 Fire Detection 9A.4-496
9A.4.4.4 Fire Suppression Systems 9A.4-496
9A.4.4.5 Penetrations 9A.4-496
9A.4.4.6 Consequences of Suppression 9A.4-496
9A.4.5 Radwaste Building 9A.4-497
9A.4.5.1 General 9A.4-497
9A.4.5.2 Facility Features 9A.4-497
9A.4.5.3 Fire Detection 9A.4-498
9A.4.5.4 Fire Suppression Systems 9A.4-498
9A.4.5.5 Penetrations 9A.4-498
9A.4.5.6 Consequences of Suppression 9A.4-498
9A.4.6 Plant Yard 9A.4-498
9A.5 Special Cases 9A.5-1
9A.5.1 Piping Penetrations, Reactor Building 9A.5-1
9A.5.2 Fire Door Deviations 9A.5-1
9A.5.3 Charcoal Filters for Process Tanks and Drain Sumps 9A.5-1
9A.5.4 Pipe Break Analyses 9A.5-1
9A.5.5 Fire Separation for Divisional Electrical Systems 9A.5-1
9A.5.5.1 RPS Scram Circuits 9A.5-2
9A.5.5.2 Main Steamline Radiation Monitor Detectors 9A.5-4
9A.5.5.3 Main Steamline ADS Relief Valves 9A.5-5
9A.5.5.4 Main Steamline Isolation Valve Control and Limit Switch Interfaces 9A.5-6
9A.5.5.5 Under the Reactor Vessel 9A.5-7
9A.5.5.6 Local Instrumentation and Control Equipment 9A.5-9
9A.5.5.7 Leak Detection System 9A.5-10
9A.5.5.8 Standby Liquid Control 9A.5-11
9A.5.5.9 Flammability Control System 9A.5-12
9A.5.5.10 Not Used 9A.5-13

Table of Contents (Continued)

9A.5.5.11 Standby Gas Treatment System 9A.5-13
9A.5.5.12 Fine Motion Control Rod Drive Motors 9A.5-13
9A.5.5.13 Reactor Building Operating Deck Radiation Monitors 9A.5-13
9A.5.5.14 RHR Shutdown Cooling Outboard Isolation Valves 9A.5-14
9A.5.5.15 RCIC System 9A.5-15
9A.5.5.16 Containment Isolation Valves 9A.5-15
9A.5.5.17 Division 4 Sensors 9A.5-15
9A.5.6 Not Used 9A.5-16
9A.5.7 Typical Circuits Analysis of Special Cases 9A.5-16
9A.6 Fire Hazard Analysis Database 9A.6-1
9A.6.1 Development of Database 9A.6-1
9A.6.2 Utilization of Database 9A.6-1

Appendix 9A
List of Tables

Table 9A.2-1 Core Cooling....9A.2-8

Table 9A.5-1 Redundant Instrumentation or Equipment in Same Fire Area 9A.5-18

Table 9A.5-2 Summary of the Reactor Building Special Cases....9A.5-19

Table 9A.6-1 Fire Hazard Analysis Equipment Data Base — Sorted by MPL Number (Superceded by Table 9A.6-2) 9A.6-5

Table 9A.6-2 Fire Hazard Analysis Equipment Database Sorted by Room — Reactor Building....9A.6-6

Table 9A.6-3 Fire Hazard Analysis Equipment Data Base — Sorted by Room — Control Building....9A.6-96

Table 9A.6-4 Fire Hazard Analysis Equipment Database—Sorted by Room—Turbine Building....9A.6-106

Appendix 9A
List of Figures

Figure 9A.4-1 Reactor Building Fire Protection at El. -8200 mm 9A.4-501
Figure 9A.4-2 Reactor Building Fire Protection at El. -1700 mm 9A.4-501
Figure 9A.4-3 Reactor Building Fire Protection at El. 4800 mm 9A.4-501
Figure 9A.4-4 Reactor Building Fire Protection at El. 12300 mm 9A.4-501
Figure 9A.4-5 Reactor Building Fire Protection at El. 18100 mm 9A.4-501
Figure 9A.4-6 Reactor Building Fire Protection at El. 23500 mm 9A.4-501
Figure 9A.4-7 Reactor Building Fire Protection at El. 27200 mm 9A.4-501
Figure 9A.4-8 Reactor Building Fire Protection at El. 31700 mm 9A.4-501
Figure 9A.4-9 Reactor Building Fire Protection at Section A-A....9A.4-501
Figure 9A.4-10 Reactor Building Fire Protection at Section B-B....9A.4-501
Figure 9A.4-11 Control Building Fire Protection, Section A-A....9A.4-501
Figure 9A.4-12 Control Building Fire Protection at El. -8200 mm 9A.4-501
Figure 9A.4-13 Control Building Fire Protection at El. -2150 mm 9A.4-501
Figure 9A.4-14 Control Building Fire Protection at El. 3500 mm 9A.4-501
Figure 9A.4-15 Control Building Fire Protection at El. 7900 mm 9A.4-501
Figure 9A.4-16 Control Building Fire Protection at El. 12300 mm 9A.4-501
Figure 9A.4-16a Control Building Fire Protection at El. 17150 mm 9A.4-501
Figure 9A.4-16b Control Building Fire Protection at El. 22200 mm 9A.4-501
Figure 9A.4-17 Turbine Building Fire Protection, Section A-A 9A.4-501
Figure 9A.4-18 Turbine Building Fire Protection at El. 5300 mm 9A.4-501
Figure 9A.4-19 Turbine Building Fire Protection at El. 12300 mm 9A.4-501
Figure 9A.4-20 Turbine Building Fire Protection at El. 20300 mm 9A.4-501
Figure 9A.4-21 Turbine Building Fire Protection at El. 30300 mm 9A.4-501
Figure 9A.4-22 Service Building Fire Protection, Section 9A.4-501
Figure 9A.4-23 Service Building Fire Protection at El –7100 mm 9A.4-502
Figure 9A.4-24 Service Building Fire Protection at El –1450 mm 9A.4-502

Figure 9A.4-25 Service Building Fire Protection at El 2950 mm 9A.4-502

Figure 9A.4-26 Service Building Fire Protection at El 7350 mm 9A.4-502

Figure 9A.4-27 Service Building Fire Protection at El 11750 mm 9A.4-502

Figure 9A.4-28 Radwaste Building Fire Protection, Section A-A 9A.4-502

Figure 9A.4-29 Radwaste Building Fire Protection at El –6500 mm 9A.4-502

Figure 9A.4-30 Radwaste Building Fire Protection at El –200 mm 9A.4-502

Figure 9A.4-31 Radwaste Building Fire Protection at El 7300 mm.....9A.4-502

Figure 9A.4-32 Radwaste Building Fire Protection at El 16000 mm.....9A.4-502

Figure 9A.5-1 Typical RPS Contact Interface Turbine Building to Control Building.....9A.5-27

Figure 9A.5-2 Typical Electrical Equipment Connection Block Diagrams of Special Cases.....9A.5-28

9A Fire Hazard Analysis

9A.1 Introduction

This appendix supplements Subsection 9.5.1.3 (Safety Evaluation).

This appendix identifies distinct fire areas for all buildings through the use of plan and elevation views of the plant. Except for the Service Building, it defines equipment, both safety-related and non-safety-related, contained within each fire area. Further, it identifies and quantifies all materials capable of supporting combustion in each of the designated fire areas in the Reactor, Control and Turbine buildings.

Primary requirements for a nuclear facility are that the design provides a means for the safe shutdown of the facility, that it maintains the condition of safe shutdown, while not posing a hazard to personnel, and that it mitigates the consequences of accidents which may occur.

The analysis addresses the hazard of fire relative to maintaining the safe shutdown capability of the plant.

9A.2 Analysis Criteria

9A.2.1 References

9A.2.1.1 Codes and Standards

The following applicable codes and standards are incorporated in the design of the ABWR Standard Plant, including the fire detection and suppression systems designs:

29CFR1910	Occupational Safety and Health Standards
29CFR1926	Safety and Health Regulations for Construction
10CFR50	Licensing of Production/Utilization Facilities
UL	Underwriters Laboratories Approved Equipment Lists
FM	Factory Mutual Approved Materials and Equipment Lists
ANI	"Basic Fire Protection for Nuclear Power Plants"
ANSI B31.1	Power Piping
ASTM D992-56	"Classification of Flammability Standards"
ASTM-E84	"Method of Test of Surface Burning Characteristics of Building Materials
NFPA 10	"Portable Fire Extinguishers—Installation"
NFPA 10A	"Portable Fire Extinguishers—Maintenance and Use"
NFPA 11	"Foam Extinguishing Systems"
NFPA 13	"Sprinkler Systems"
NFPA 14	"Standpipe and Hose Systems"
NFPA 15	"Standard for Water Spray Fixed Systems"
NFPA 16	Deluge Foam-Water Sprinkler Systems
NFPA 16A	Closed Head Foam-Water Sprinkler Systems
NFPA 20	"Centrifugal Fire Pump-Installation"
NFPA 24	"Outside Protection"

NFPA 26	"Recommended Practice for the Supervision of Valves Controlling Water Supplies for Fire Protection"
NFPA 37	"Stationary Combustion Engines and Gas Turbines"
NFPA 70	"National Electric Code"
NFPA 72	"Protective Signaling Systems"
NFPA 78	"Lightning Protection Code"
NFPA 80	"Fire Doors and Windows"
NFPA 80A	"Protection from Exposure Fires"
NFPA 90A	"Air Conditioning and Ventilating Systems"
NFPA 91	"Blower and Exhaust Systems"
NFPA 92A	"Smoke Control System"
NFPA 101	"Life Safety Code"
NFPA 1963	"Screw Threads and Gaskets for Fire Hose Connections"
NFPA 1961	"Fire Hose"
NFPA 251	"Fire Test, Building Construction and Materials"
NFPA 252	"Fire Tests of Door Assemblies"
NFPA 255	"Surface Burning Characteristics of Building Materials"
NFPA 321	"Classification of Flammable Liquids"
NFPA 801	"Facilities Handling Radioactive Materials"
NFPA 802	"Nuclear Reactors"
NFPA 803	"Fire Protection for Light Water Nuclear Power Plants"
Regulatory Guide 1.39	"Housekeeping Requirements for Water-Cooled Nuclear Power Plants"
Regulatory Guide 1.75	"Physical Independence of Electrical Systems"

BTP-CMEB 9.5-1 Appendix A "Guidelines for Fire Protection for Nuclear Power Plants"

IEEE-384 "Criteria for Independence of Class 1E Equipment and Circuits"

9A.2.2 Drawings

9A.2.2.1 Fire Area Separation and Fire Equipment Drawings

Drawings showing the fire area separation and fire equipment for the Reactor Building, Control Building, Turbine Building, Service Building and the Radwaste Building are included in Section 9A.4.

The fire protection yard main piping arrangement and fire protection water supply system drawings are in Section 9.5.

9A.2.3 Terminology

(1) **Fire Area**—portion of a building or plant that is separated from other areas by fire barriers.

(2) **Fire Barrier**—components of construction (i.e., walls, floors and their supports, including beams, joists, columns, penetration seals or closures, fire doors and fire dampers) that are rated by approving laboratories in hours of resistance to fire and are used to prevent the spread of potential fire.

(3) **Fire Suppression**—control and extinguishing of fires (Manual fire suppression includes the use of hoses, portable extinguishers or fixed systems by plant personnel. Automatic fire suppression is the use of automatically actuated, fixed systems such as water or foam systems.).

(4) **Noncombustible Material**—materials having the characteristics listed below:

(a) Material which, in the form in which it is used and under the conditions anticipated, will not ignite, burn, support combustion, or release flammable vapors when subjected to fire or heat.

(b) Materials having a structural base of noncombustible material, as defined in (a) with a surfacing not over 3.2 mm thick which has a flame spread rating not higher than 50 when measured in accordance with ASTM E-84.

There is an exception to this definition that allows the use of combustible interior finishes when listed by a nationally recognized testing laboratory, such as Factory Mutual or Underwriters Laboratories Incorporated, for a flame spread, smoke and fuel contribution of 25 or less in its use configuration.

(5) **Nuclear Safety-Related Structures, Systems and Components—**plant features necessary to assure the integrity of the reactor coolant pressure boundary and the capability either to shut down the reactor and maintain it in a cold safe shutdown condition or to prevent or mitigate the consequences of accidents.

(6) **Water Spray System**—a special fixed pipe system connected to a reliable source of fire protection water supply and equipped with water spray nozzles for specific water discharge and distribution over surface or area to be protected (The piping system is connected to the water supply through an automatic or manually actuated valve which initiates the flow of water.).

(7) **Wet Standpipe System—**The ABWR design utilizes a ANSI B31.1 standpipe system in all Seismic Category I buildings.

9A.2.4 Acceptance Criteria

The following basic guidelines have been used as criteria for the fire hazard analysis:

(1) The analysis is based on the design as it now exists and on the equipment as currently specified, but not yet purchased. The analysis provides a basis for evaluating the fire protection characteristics and features of equipment as it is purchased.

(2) Automatic wet pipe sprinkler systems are provided in the ABWR design for areas in which a transient fire loading is most likely to occur as a result of combustibles introduced by normal maintenance operations.

The fire hazard analysis is based on the introduction of combustibles to any area of the plant, subject to the owners' administrative control.

(3) The buildings are generally of reinforced concrete construction. The walls, floors, and ceilings have 3-hour fire resistive rating where required by a high combustible loading (lubrication oil tank, for example) in the room or where adjacent room contains equipment or systems from a different safety division. Stair towers which do not communicate between areas of different divisions may have walls and doors with a 1-hour fire rating for personnel protection during egress from the areas. Non-concrete interior walls are constructed of metal studs and gypsum wallboard to the required fire resistive rating.

(4) Doors, in general, are 3-hour rated, complying with NFPA ratings. There are also doors, not labeled, which provide building separation. Typical of these are the doors for the personnel air lock into the reactor containment and the

missile/tornado doors at the equipment access entrance to the reactor building. The term "doors," where used in the analysis, shall mean doors, frames and hardware.

(5) The fireproofing of structural steel members is accomplished by application of a UL-listed or FM-approved cementicious or ablative material, or by a UL- or FM-approved boxing design. The required fire rating, utilizing gypsum board, determines the fireproofing material thickness.

(6) Surface finishes are specified to have a flame spread, fuel-contributed and smoke-evolved index of 25 or less (Class A), as determined by ASTM-E84 (NFPA 255).

(7) The use of plastic materials, including electrical cable insulation, has been minimized in the ABWR design.

(8) Suspended ceilings are used in some areas of the plant. The ceilings, including the lighting fixtures, are of noncombustible construction.

(9) The electrical cable fire-stops are tested to demonstrate a fire rating equal to the rating of the barrier they penetrate. As a minimum, the penetrations meet the requirements of ANI. The tests are performed or witnessed by a representative of a qualified, independent testing laboratory. The documented test results for the acceptable fire-stops are made a part of the plant design records.

(10) Not Used

(11) Control, power or instrument cables of redundant systems that are used for bringing the reactor to safe, cold shutdown, or of any other divisional system, are separated by 3-hour fire barriers.

(12) Certain areas of the plant have trays in stacked array. Where stacking of trays occurs, power cable, which is the most susceptible to internally generated fires, is routed in the uppermost tray to the greatest extent possible to provide maximum isolation from other trays in the stack.

The fire loadings of electrical cable in trays is based on flame-retardant, cross-linked polyethylene insulation (XLPE-FR) having a calorific value of 32.56×10^3 J/g.

The cable trays have been estimated at the maximum design fill to contain between 11.91 and 15.63 kg of insulation per running meter of tray.

The analysis uses 13.77 kg of insulation per meter of tray. The combustible loading is based on maximum loading. The loading reduces as cables drop out of (exits) trays and the fire loading decreases. No attempt has been made to translate the fire loading to a kilojoule value per square meter for any of the fire areas as a result of cable insulation.

(13) Certain compartments contain instruments in safety-related systems with only local indicating capability. They do not initiate any signal for remote indicators, recorders or alarms, nor actuate any devices for the safe, cold shutdown of the reactor. Therefore, local indicating instruments have not been considered in the fire hazard analysis.

(14) Total reliance is not placed on a single fire suppression system. A minimum of two fire suppression means is available to each fire area. The plant design provides the following types of suppression and utilizes them in suitable combination for the fire hazard considered:

(a) Automatic wet pipe sprinkler

(b) Standpipe and hose reels

(c) Class ABC hand extinguishers

(15) The design includes requirements for delivering water to the standpipe and hose reel systems through any single failure mode, including the SSE. The standpipe system is ANSI B31.1 in all Seismic Category I buildings. The standpipes are contained within the buildings and thus are also protected from other phenomena of less severity and greater frequency.

The effects of pipe breaks in fire suppression systems and protection methods for the effects of pipe breaks meet the criteria specified in Section 3.6.

(16) Piping penetrations are provided with fire-stops when penetrating fire-resistive walls.

(17) HVAC penetrations are provided with fire dampers equal in rating to the fire barrier penetrated.

(18) The ABWR design provides ventilating systems which minimize the release of radioactive materials through the use of HEPA, high efficiency and charcoal filtration systems.

9A.2.5 Core Cooling System

The core cooling systems are required when the NSSS is isolated from the main condenser during shutdown or accident conditions.

The main steamlines and feedwater lines provide the core cooling path to and from the main condenser during normal operation at power and during startup and shutdown transients when the reactor is not isolated.

The core cooling function is accomplished through interaction of various systems. The core cooling systems provide one or more of the following functions:

(1) Maintenance of reactor vessel water level

(2) Depressurization of the reactor pressure vessel

(3) Heat removal

(4) Heat sink

(5) Electrical power

(6) Control

In addition, electrical power is required for pump motors and valve operation. Instrumentation automatically activates the core cooling system or provides signals to the control room operators to activate the appropriate system manually.

Table 9A.2-1 shows the core cooling systems that provide one or more of the core cooling functions.

The table includes the operating mode for multimode systems, the functions performed, reactor conditions that require system operation, the divisional assignment, the backup system and Tier 2 reference for system description.

Table 9A.2-1 Core Cooling

System/Mode	Function[1]	Reactor Condition	Division[2]	Backup[3] System	Tier 2 Ref	Remarks
RHR A/Decay Heat Removal	3	Normal shutdown	1	RHR B RHR C	5.4.7	4,5,6
RHR B/Decay Heat Removal	3	Normal shutdown	2	RHR A RHR C	5.4.7	4,5,6
RHR C/Decay Heat Removal	3	Normal shutdown	3	RHR A RHR B	5.4.7	4,5,6
RHR A/Suppression Pool Cooling	3	Hot standby, LOCA	1	RHR B RHR C	6.2.2	4,6
RHR B/Suppression Pool Cooling	3	Hot standby, LOCA	1	RHR A RHR C	6.2.2	4,6
RHR C/Suppression Pool Cooling	3	Hot standby, LOCA	1	RHR A RHR B	6.2.2	4,6
RHR C/Wetwell Drywell Spray	3/1	LOCA, SBE[7]	1	RHR B	6.2.2 6.3.2	4,6,8
RHR B/Wetwell Drywell Spray	3/1	LOCA, SBE[7]	1	RHR C	6.2.2 6.3.2	4,6,8
RCIC	1	Isolation, LOCA	1	HPCF B HPCF C	5.4.6	4,9
HPCF B	1	Isolation, LOCA	2	ADS/RHR A	6.3.2	4
HPCF C	1	Isolation, LOCA	3	ADS/RHR B	6.3.2	4
ADS	2	LOCA	2	HPCF	6.3.2	10,11
RCW A	4	All	1	RCW B RCW C	9.2.11	
RCW B	4	All	2	RCW A RCW C	9.2.11	
RCW C	4	All	3	RCW A RCW B	9.2.11	
CUW	4	Shutdown	—	—	5.4.8	12,13
CRD	1	Shutdown	—	—	4.6	
Div 1 electrical power	5	All	2	8.3 Div 3		
Div 2 electrical power	5	All	2	Div 1 Div 3	8.3	
Div 3 electrical power	5	All	3	Div 1 Div 2	8.3	

Table 9A.2-1 Core Cooling (Continued)

System/Mode	Function[1]	Reactor Condition	Division[2]	Backup[3] System	Tier 2 Ref	Remarks
Control Room	6	All	All	Remote shutdown panel and system	7.4.1.4	
Div 1 instrument power & signals	6	All	1	2, 3 and/ or 4	7.2, 7.3	
Div 2 instrument power & signals	6	All	2	1, 3 and/ or 4	7.2, 7.3	
Div 3 instrument power & signals	6	All	3	1, 2 and/ or 4	7.2, 7.3	
Div 4 instrument power & signals	6	All	4	1, 2 and/ or 3	7.2, 7.3	

1 Functions: 1 – maintain reactor water level
2 – depressurize the reactor vessel
3 – heat removal
4 – heat sink
5 – electrical power
6 – control (includes logic systems power for initiation of RPS and core cooling systems)

2 Division—electrical power divisional assignment

3 Backup System—see Subsection 6.3.2 for required number of ECCS systems.

4 Room coolers needed for pump operation

5 Closed loop to and from reactor vessel

6 RCW provides coolant to heat exchangers.

7 SBE—small break event

8 Not a core cooling mode

9 Water supply for RCIC is condensate storage pool primary or suppression pool (secondary).

10 Pneumatic valves

11 Depressurizes the reactor to allow LP systems to function

12 Not a safety system

13 Tier 2 does not describe this mode but system could be used to cool core.

9A.3 Analysis Approach

9A.3.1 Review Data

The analysis is based on a review of every room or area, on a floor-by-floor basis, for each building of design. The following data have been gathered for each room or area being reviewed:

(1) Identification of the safety-related and non-safety-related systems, and associated cabling within each fire area, which could provide cooling to the core to safely shut down the reactor, and removal of decay heat.

(2) Identification of fire areas containing radioactive material which could be released to the exclusion area or beyond should a fire occur in that area.

(3) Identification of safety and non-safety-related equipment contained within the boundaries of each fire area, which do not provide cooling to the core to safely shut down the reactor.

(4) Definition of the fire barriers surrounding a specific room or area which qualify rating the room or area as a separate fire area.

(5) A specific listing of types, quantities and characteristics of all combustibles within a fire area which could constitute a fire load.

(6) Quantitative listing of fire loadings which represent the combustibles identified for each fire area.

(7) Listing of all the fire detection and suppression capabilities provided and their accessibility for each fire area.

(8) An analysis of each fire area identifies the design criteria employed in providing fire protection for the equipment within the fire area. Divisional safety-related equipment is separated by 3-hour rated fire barriers, except equipment mounted in the Control Building, and primary containment, and the special cases which are discussed in Subsection 9A.5 (for more information on safety-related equipment fire separation and safe shutdown see Subsection 9.5.1.2.11). Fire detection, fire suppression, and fire stops capabilities are also discussed in the analysis.

(9) An analysis defining the consequences of the fire for each fire area [This is stated as loss of function and identifies the divisional backup capability available for safety-related systems. The loss of function that would not impair the capability of safe, cold shutdown is identified where non-safety-related systems are involved.].

(10) An analysis of each fire area addressing the consequences of fire, if the fire protection system functions as designed. The fire protection system is defined as having the capability to detect, contain and extinguish the fire. The ability to restrict the fire to a discrete area, the result of the introduction of water to the fire area and the capability of extinguishing the fire by various means of suppression are stated. See Section 3.6 for a discussion of pipe break consequences.

(11) Design provisions for protecting the functional capability or safety-related systems and associated cabling from the results of inadvertent operation, careless operation or rupture of the extinguishing systems for each fire area are stated.

(12) The means of containing the inhibiting the progress of a fire in each fire area [This is defined as the use of a fire-resisting enclosure or barrier, fire-stops at wall penetrations, dust dampers, curbs or fire doors into the area.].

(13) Room numbers are shown on the analysis pages which conform to those shown on the fire area separation drawings.

9A.3.2 Not Used

9A.3.3 Separation

A specific analysis has been prepared for each fire area where redundant systems of safety-related equipment or electrical cables are contained in a common fire area to confirm that adequate protection has been provided by means of separation by distance, physical barriers, electrical isolation, electrical circuit characteristics or adequate backup systems. The analyses appear in Section 9A.5 (Special Cases).

9A.3.4 Insulation Fire Hazard

Electrical cable insulation which is contained in either solid-bottom, solid-cover metal trays or in conduits is not considered to represent an exposed, combustible fire hazard.

9A.3.5 Exceptions to Penetrations Requirements

(1) Four 550 mm Atmospheric Control System supply and exhaust lines for the wetwell and the drywell, do not have fire dampers. There are 2 containment isolation valves for each supply and exhaust. The valves are normally closed except during plant outage periods, at which time smoke removal should be accomplished without interruption, if a fire occurs. The drywell or wetwell sprays would be initiated to save the containment at a temperature well below the threshold of damage for the duct, assuming the fire was not suppressed quickly.

9A.3.6 Wall Deviations

The wall descriptions below represent a tested and approved 3-hour fire-resistive assembly and an anticipated possible deviation. Though specific applications for these walls have not been identified at this time, it is anticipated that applications will develop as the detail design of the plant is completed.

The Type 1 wall design is the UL tested and approved design U463. The type 2 assembly will require a UL test.

(1) Type 1 wall is UL tested and approved 3-hour fire barrier wall with three layers of fire code Gypsum wallboard on each side of the studs.

(2) Type 2 wall is a variation of type 1 wall with three layers of gypsum wall board on one side and a 1.25 cm thick steel plate for bullet resistance and two layers of fire code gypsum wall board on the other side.

9A.3.7 Door Deviations

Certain doors throughout the facility have a multipurpose function such as fire, tornado, pressure, missile, seismic, watertight and airlocks. Where possible, these doors are specified to rated and labeled criteria and are then identified as rated doors.

When other criteria require the manufacturer to delete the label, the door is identified as equivalent. These doors, except for the Reactor Building equipment access door are required to have a UL or FM label.

Where the door is not constructed as a fire door, such as a containment personnel airlock, it is identified by its main function.

9A.4 Analysis

9A.4.1 Reactor Building

9A.4.1.1 Reactor Bldg El –8200 mm

9A.4.1.1.1 Lower Drywell (Rm No. 191)

(1) Fire Area—F1901

(2) Equipment: See Table 9A.6-2 for this elevation. Devices within the lower drywell are also listed at floor elevations –1700 and 4800, as appropriate.

Safety-Related	Provides Core Cooling
Yes, D1,D2, D3, & D4	Yes

(3) Radioactive Material Present—Normally, none that can be released as a result of fire. Depending on operating history, low levels of contamination could be present. Also, any radiation release from the drywell sumps is contained within the containment.

(4) Qualifications of Fire Barriers—The walls, floor and ceiling are concrete, which is approximately 1-meter thick as a minimum. Risers lead from the lower drywell up through diaphragm floor to the upper drywell. The primary purpose of the risers is to equalize the pressure between the upper and lower drywell. The risers are also used for the routing of cables and piping between the upper and lower drywells. A personnel lock provides access to the drywell at zero degrees and an elevation of –180 mm. Access and egress to the drywell is through this personnel lock. An equipment removal lock is provided at the 180 degree location. The drywell atmosphere is inerted with nitrogen during plant operation.

(5) Combustibles Present:

Fire Loading	Total Heat of Combustion (MJ)
Divisional cable trays containing 14 kg/m of XLPE-FR cable insulation.	727 MJ/m^2, NCLL (727 MJ/m^2 maximum average) applies.

(6) Detection Provided—Class A supervised POC in the containment purge system and manual pull alarms when the containment is purged.

(7) Suppression Available:

Type	Location/Actuation
Inerted during plant operation. Drywell spray is ultimate line of defense during plant outage.	General Manual
Standpipe and hose reel.	Personnel lock entrance/Manual
ABC hand extinguishers during significant outage work.	Temporary as conditions warrant/Manual

(8) Fire Protection Design Criteria Employed:

(a) Credit is taken for the fact that the drywell is inerted during plant operation.

(b) Quantities of combustibles are minimized.

(c) The spacing between redundant equipment and cabling is kept to a maximum.

(d) Smoke removal is provided by the drywell purge and exhaust system.

(9) Consequences of Fire—A fire during plant operation is not possible due to the drywell being inerted. A fire in the lower drywell would not prevent the continuation of core cooling.

(10) Consequences of Fire Suppression—Suppression extinguishes the fire. Refer to Section 3.4, “Water Level (Flood) Design”, for the drain system.

(11) Design Criteria Used for Protection Against Inadvertent Operation, Careless Operation or Rupture of the Suppression System:

(a) Location of the manual suppression system external to the drywell

(b) Provision of raised supports for the equipment

(c) Refer to Section 3.4, “Water Level (Flood) Design”, for the drain system.

(d) ANSI B31.1 standpipe, external to the drywell (rupture unlikely)

(12) Fire Containment or Inhibiting Methods Employed:

(a) Inerted atmosphere.

(b) Quantities of combustibles minimized.

(13) Remarks:

(a) There are no containment electrical penetrations in the lower drywell.

(b) The reactor internal pump (RIP) motors are water lubricated so that there is no lubricating oil in the lower drywell.

9A.4.1.1.2 Wet Well (Rm No. 190)

(1) Fire Area—F1900

(2) Equipment: See Table 9A.6-2

Safety-Related	Provides Core Cooling
Yes, D1, 2, D3, & D4	Yes

(3) Radioactive Material Present—None that can be released as a result of fire.

(4) Qualifications of Fire Barriers—The wetwell is a concrete annular tank partially filled with water. It has a nitrogen blanket during plant operation. There is nothing to burn. The concrete walls are not fire rated but their construction provides an equivalent fire rating of more than 3 hours.

(5) Combustibles Present:

Fire Loading	Total Heat of Combustion (MJ)
None	

(6) Detection Provided—None.

(7) Suppression Available:

Type	Location/Actuation
Standpipe and hose reel	External to personnel access lock/Manual
ABC hand extinguishers	Carry in if maintenance operation warrants additional fire suppression/Manual

(8) Fire Protection Design Criteria Employed:

(a) Normally inaccessible

(b) Normally inerted

(c) No exposed combustible materials

(d) Manual suppression available during outages when maintenance activities may be undertaken

(e) Wetwell spray is ultimate suppression system

(9) Consequences of Fire—It is possible for a fire to occur only during plant outages. Fire would be extinguished without core cooling being disturbed.

(10) Consequences of Fire Suppression—Suppression extinguishes the fire. Refer toSection 3.4, "Water Level (Flood) Design", for the drain system.

(11) Design Criteria Used for Protection Against Inadvertent Operation, Careless Operation or Rupture of the Suppression System:

Location of the manual suppression system external to the wetwell

(12) Fire Containment or Inhibiting Methods Employed:

No exposed combustibles

(13) Remarks—None.

9A.4.1.1.3 RHR Pump Room A (Rm No. 110)

(1) Fire Area—F1100

(2) Equipment: See Table 9A.6-2

Safety-Related	Provides Core Cooling
Yes, D1,D2, D3 & D4	Yes

(3) Radioactive Material Present—None that can be released as a result of fire.

(4) Qualifications of Fire Barriers—With the exception of the walls common with the elevator and stair torchwood sump area, and Corridor C (Rm No. 115), the walls are within fire area F1100 and are not fire-rated. The primary containment acts as one wall of the room. The maintenance area on the floor above this room is in the same Division 1 fire area as the room so that the ceiling is not required to serve as a fire barrier. The wall common with Corridor 115 serves as a fire barrier between divisions 1 and 3 fire areas. RHR

A and the RCIC are of the same electrical division and in a common fire area so the common wall is not required to have a fire rating. There is a pressure resistant, water-tight, door to the corridor. All personnel entry and egress is by this single path. Two equipment removal hatches are provided in the ceiling at the –1700 mm elevation.

(5) Combustibles Present:

Fire Loading	Total Heat of Combustion (MJ)
17 m of divisional cable trays containing 14kg/m of XLPE-FR Cable Insulation	727 MJ/m^2, NCLL (727 MJ/m^2 maximum average) applies.
106 liters of Class III B lube oil	4.6 x 10^3

(6) Detection Provided—Class A supervised POC in the room and manual alarm pull stations at Col. 6.9-D.0 in the corridor.

(7) Suppression Available:

Type	Location/Actuation
Standpipe and hose reel	Col. 6.8-D.0./Manual
ABC hand extinguishers	Col. 6.9-D.0./Manual

(8) Fire Protection Design Criteria Employed:

(a) The function is located in a fire area which is separate from the fire areas containing equipment which provide alternate means of performing the safety or shutdown function.

(b) Fire detection and suppression capability is provided and accessible.

(c) Fire stops are provided for cable tray and piping penetrations through rated fire barriers.

(9) Consequences of Fire—The postulated fire assumes the loss of the function. The provisions for core cooling systems backup are defined in Subsection 9A.2.5. Smoke from a fire will be removed by the normal HVAC System operating in its smoke removal mode.

(10) Consequences of Fire Suppression—Suppression extinguishes the fire. Refer to Section 3.4, "Water Level (Flood) Design", for the drain system.

(11) Design Criteria Used for Protection Against Inadvertent Operation, Careless Operation or Rupture of the Suppression System:

(a) Location of the manual suppression system external to the room

(b) Provision of raised supports for the equipment

(c) Refer to Section 3.4, "Water Level (Flood) Design", for the drain system.

(d) ANSI B31.1 standpipe (rupture unlikely)

(e) The safety-related function has a remote backup system

(12) Fire Containment or Inhibiting Methods Employed:

(a) The functions are located in a separate fire-resistive enclosure.

(b) Fire stops are provided for cable tray and piping penetrations through fire rated barriers.

(c) The means of fire detection, suppression and alarming are provided and accessible.

(13) Remarks:

(a) The room contains electrical cables in trays. Cable insulation in trays is discussed in Subsection 9A.3.4.

(b) It is assumed that the pump lube oil is contained in an integral reservoir and that there is no exposed piping.

(c) There are no HVAC duct penetrations through the fire barriers for this room.

(d) Temperature elements E31-TE008A, B, C, D of the leak detection system are mounted in this room. See Section 9A.5, Special Cases, for an explanation of why this is required and why it is deemed to be acceptable.

9A.4.1.1.4 RCIC Room A (Rm No. 112)

(1) Fire Area—F1100

(2) Equipment: See Table 9A.6-2

Safety-Related	Provides Core Cooling
Yes, D1, D2, D3, D4	Yes

(3) Radioactive Material Present—None that can be released as a result of fire.

(4) Qualifications of Fire Barriers—The primary containment acts as one wall of the room. A portion of the ceiling serves as a fire barrier between the RCIC room and the division 3 maintenance area on the floor above. The walls common with Corridor 115 and the adjacent HPCF Pump C room serve as fire barriers between divisions 1 and 3 fire areas. RHR A and the RCIC are of the same electrical division and in a common fire area so the common wall is not required to have a fire rating. There is a pressure resistant, water-tight, door to the corridor via a vestibule. All personnel entry and egress is by this single path. An equipment removal hatch is provided in the ceiling at the -1700 mm elevation.

(5) Combustibles Present:

Fire Loading	Total Heat of Combustion (MJ)
17 m of divisional cable trays containing 14 kg/m of XLPE-FR cable insulation	727 MJ/m^2, NCLL (727 MJ/m^2 maximum average) applies.
106 liters of Class III B lube oil.	4.6 x 10^3

(6) Detection Provided—Class A supervised POC in the room and manual alarm pull stations at Col. 6.9-D.0 in the corridor.

(7) Suppression Available:

Type	Location/Actuation
Standpipe and hose reel	Col. 6.9-D.0, 5.8-A.5/Manual
ABC hand extinguishers	Col. 6.9-D.0/Manual

(8) Fire Protection Design Criteria Employed:

(a) The function is located in a fire area which is separate from the fire areas containing equipment which provide alternate means of performing the safety or shutdown function.

(b) Fire detection and suppression capability is provided and accessible.

(c) Fire stops are provided for cable tray and piping penetrations through rated fire barriers.

(9) Consequences of Fire—The postulated fire assumes the loss of the function. The provisions for core cooling systems backup are defined in Subsection 9A.2.5.

Smoke from a fire will be removed by the normal HVAC System operating in its smoke removal mode.

(10) Consequences of Fire Suppression—Suppression extinguishes the fire. Refer to Section 3.4, "Water Level (Flood) Design", for the drain system.

(11) Design Criteria Used for Protection Against Inadvertent Operation, Careless Operation or Rupture of the Suppression System:

(a) Location of the manual suppression system external to the room

(b) Provision of raised supports for the equipment

(c) Refer to Section 3.4, "Water Level (Flood) Design", for the drain system.

(d) ANSI B31.1 standpipe (rupture unlikely)

(e) The safety-related function has a remote backup system

(12) Fire Containment or Inhibiting Methods Employed:

(a) The functions are located in a separate fire-resistive enclosure.

(b) Fire stops are provided for cable tray and piping penetrations through fire rated barriers.

(c) The means of fire detection, suppression and alarming are provided and accessible.

(13) Remarks:

(a) The room contains electrical cables in trays. Cable insulation in trays is discussed in Subsection 9A.3.4.

(b) It is assumed that the pump lube oil is contained in an integral reservoir and that there is no exposed piping.

(c) Temperature elements E31-TE005A, B,C,D of the leak detection system are mounted in this room. See Section 9A.5, Special Cases, for an explanation of why this is required and why it is deemed to be acceptable.

9A.4.1.1.5 Corridor A (Rm No. 115/131)

(1) Fire Area—F1300

(2) Equipment: See Table 9A.6-2

Safety-Related	Provides Core Cooling
Yes, D3	Yes

(3) Radioactive Material Present—None that can be released as a result of fire.

(4) Qualifications of Fire Barriers—The building exterior wall, the wall shared with RHR A and RCIC rooms and portion of the ceiling over Room 115 are 3 hour fire-resistive concrete. The concrete base mat of the building forms the floor. There are four pressure resistant, water-tight doors providing access to the RHR A pump room (Rm 110), RCIC room (Rm 112), HPCF C pump room (Rm 130), and RHR C pump room (Rm 132). Two 3 hour fire resistive doors provide accesses to this Division 3 corridor. One fire rated door provides accesses from Division 1 (Rm 116) to Room 115 at Row A.0-A.3, Column 5.3, and the other fire rated door provides accesses from Division 2 (Rm 134) to Room 131 at Row F.7-G.0, Column 6.0.

(5) Combustibles Present:

Fire Loading	Total Heat of Combustion (MJ)
Divisional cable trays containing 14 kg/m of XLPE-FR cable insulation	727 MJ/m^2, NCLL (727 MJ/m^2 maximum average) applies.

(6) Detection Provided—Class A supervised POC in the corridor and manual alarm pull stations at Col. 5.8-A.5, 6.9-D.0, and 6.9-F.9.

(7) Suppression Available:

Type	Location/Actuation
Standpipe and hose reel	Col. 6.9-D.0, 6.9-F.9 & 5.8-A.5/ Manual
ABC hand extinguishers	Col. 6.9-D.0, 6.9-F.9 & 5.8-A.5/ Manual

(8) Fire Protection Design Criteria Employed:

(a) The function is located in a fire area which is separate from the fire areas containing equipment which provide alternate means of performing the safety or shutdown function.

(b) Fire detection and suppression capability is provided and accessible.

(c) Fire stops are provided for cable tray and piping penetrations through rated fire barriers.

(9) Consequences of Fire—The postulated fire assumes the loss of the function. The provisions for core cooling systems backup are defined in Subsection 9A.2.5.

Smoke from a fire will be removed by the normal HVAC System operating in its smoke removal mode.

(10) Consequences of Fire Suppression—Suppression extinguishes the fire. Refer to Section 3.4, “Water Level (Flood) Design”, for the drain system.

(11) Design Criteria Used for Protection Against Inadvertent Operation, Careless Operation or Rupture of the Suppression System:

(a) Location of the manual suppression system in the corridor where there is a minimum of safety-related equipment

(b) Provision of raised supports for the equipment

(c) Refer to Section 3.4, “Water Level (Flood) Design”, for the drain system.

(d) ANSI B31.1 standpipe (rupture unlikely)

(12) Fire Containment or Inhibiting Methods Employed:

(a) The functions are located in a separate fire-resistive enclosure.

(b) Fire stops are provided for cable tray and piping penetrations through fire rated barriers.

(c) The means of fire detection, suppression and alarming are provided and accessible.

(13) Remarks:

(a) The corridor contains piping and cable trays in its upper elevation.

(b) The room is cooled by the Reactor Building HVAC System, which is not redundant or safety grade.

9A.4.1.1.6 Quadrant 1 Corridor (Rm No. 116)

(1) Fire Area—F1100

(2) Equipment: See Table 9A.6-2

Safety-Related	Provides Core Cooling
Yes, D1	Yes

(3) Radioactive Material Present—None that can be released as a result of fire.

(4) Qualifications of Fire Barriers—The building exterior wall and the walls shared with the stairwell and the elevator tower and the backwash transfer pump area (Rm 149) are 3 h fire-resistive concrete. The concrete base mat of the building forms the floor. The walls common with the HCU room (Rm 117) and the sump room (Rm 119) and the ceiling are of concrete construction but are not fire rated as the adjacent rooms are within the same fire area. There is a 3 h fire-resistive door providing access to the stairwell (Rm 195). This division 1 corridor opens into the division 3 corridor, (Rm 115) through a 3 h fire–resistive door at row A.0-A.3 and column 5.3. A 3 h fire-resistive door opens to the quadrant 4 corridor (Rm 142) at row A.0-A.3 and column 2.6. The quadrant 4 corridor contains division 2 RCWS piping.

(5) Combustibles Present:

Fire Loading	Total Heat of Combustion (MJ)
Divisional cable trays containing 14 kg/m of XLPE-FR cable insulation	727 MJ/m^2, NCLL (727 MJ/m^2 maximum average) applies.

(6) Detection Provided—Class A supervised POC in the corridor and manual alarm pull stations at Col. 5.8-A.5.

(7) Suppression Available:

Type	Location/Actuation
Standpipe and hose reel	Col. 5.8-A.5/Manual
ABC hand extinguishers	Col. 5.8-A.5/Manual

(8) Fire Protection Design Criteria Employed:

(a) The function is located in a fire area which is separate from the fire areas containing equipment which provide alternate means of performing the safety or shutdown function.

(b) Fire detection and suppression capability is provided and accessible.

(c) Fire stops are provided for cable tray and piping penetrations through rated fire barriers.

(9) Consequences of Fire—The postulated fire assumes the loss of the function. The provisions for core cooling systems backup are defined in Subsection 9A.2.5.

Smoke from a fire will be removed by the normal HVAC System operating in its smoke removal mode.

(10) Consequences of Fire Suppression—Suppression extinguishes the fire.Refer to Section 3.4, “Water Level (Flood) Design”, for the drain system.

(11) Design Criteria Used for Protection Against Inadvertent Operation, Careless Operation or Rupture of the Suppression System:

(a) Location of the manual suppression system in the corridor where there is a minimum of safety-related equipment

(b) Provision of raised supports for the equipment

(c) Refer to Section 3.4, “Water Level (Flood) Design”, for the drain system.

(d) ANSI B31.1 standpipe (rupture unlikely)

(12) Fire Containment or Inhibiting Methods Employed:

(a) The functions are located in a separate fire-resistive enclosure.

(b) Fire stops are provided for cable tray and piping penetrations through fire rated barriers.

(c) The means of fire detection, suppression and alarming are provided and accessible.

(13) Remarks—The corridor contains piping and cable trays in its upper elevation.

9A.4.1.1.7 CRD HCU Quadrant I/IV (Rm No. 117)

(1) Fire Area—F1100

(2) Equipment: See Table 9A.6-2

Safety-Related	Provides Core Cooling
Yes, D1, D2, D3 & D4	Yes, D1, D2, D3 & D4

(3) Radioactive Material Present—None that can be released as a result of fire.

(4) Qualifications of Fire Barriers—The wall common with the reactor water cleanup (CUW) demineralizer rooms (Rms 144 and 149) forms a portion of the fire barrier between division 2 fire area F1200 and division 1 fire area F1100 and is of 3 h fire-resistive concrete construction. All other walls and the ceiling are constructed of concrete but are not fire rated as they are within fire area F1100. The concrete base mat serves as the floor. There are 2 nonlabeled doors to the corridor (Rm 116). Curbed, nonlabeled doors provide entry to rooms 111 and 118.

(5) Combustibles Present:

Fire Loading	Total Heat of Combustion (MJ)
15.25 m of divisional cable trays containing 14 kg/m of XLPE-FR cable insulation	727 MJ/m^2, NCLL (727 MJ/m^2 maximum average) applies.

(6) Detection Provided—Class A supervised POC in the room and manual alarm pull stations at Col. 5.8-A.5 in the corridor.

(7) Suppression Available:

Type	Location/Actuation
Standpipe and hose reel	Col. 5.8-A.5/Manual
ABC hand extinguishers	Col. 5.8-A.5/Manual

(8) Fire Protection Design Criteria Employed:

(a) The function is located in a fire area which is separate from the fire areas containing equipment which provide alternate means of performing the safety or shutdown function.

(b) Fire detection and suppression capability is provided and accessible.

(c) Fire stops are provided for cable tray and piping penetrations through rated fire barriers.

(9) Consequences of Fire—The postulated fire assumes the loss of the function for the equipment in the fire area. The scram function is fail safe and would therefore scram as a result of a fire.

Smoke from a fire will be removed by the normal HVAC System operating in its smoke removal mode.

(10) Consequences of Fire Suppression—Suppression extinguishes the fire. Refer to Section 3.4, “Water Level (Flood) Design”, for the drain system.

(11) Design Criteria Used for Protection Against Inadvertent Operation, Careless Operation or Rupture of the Suppression System:

(a) Location of the manual suppression system external to the room

(b) Provision of raised supports for the equipment

(c) Refer to Section 3.4, “Water Level (Flood) Design”, for the drain system.

(d) ANSI B31.1 standpipe (rupture unlikely)

(e) The safety-related function has a remote backup system and is fail safe

(12) Fire Containment or Inhibiting Methods Employed:

(a) The functions are located in a separate fire-resistive enclosure.

(b) Fire stops are provided for cable tray and piping penetrations through fire rated barriers.

(c) The means of fire detection, suppression and alarming are provided and accessible.

(13) Remarks—The hydraulic control lines for divisions 2 and 3 from the scram bank are routed up to elevation 4000 mm where they enter containment through the top of the personnel lock. Section 9A.5, Special Cases provides a discussion as to how the division I and IV pressure transmitters which monitor charging header pressure are mounted in this room, and why it is acceptable to mount this equipment in the same room.

9A.4.1.1.8 Not Used

9A.4.1.1.9 Quadrant A Sump Room (Rm No. 119)

(1) Fire Area—F1100

(2) Equipment: See Table 9A.6-2

Safety-Related	Provides Core Cooling
Yes, D1	No

(3) Radioactive Material Present—None that can be released as a result of fire. Normally the sumps would not be contaminated. If they did become slightly contaminated prior to a fire, any contamination released as a result of boiling initiated by the heat of the fire would be contained within secondary containment.

(4) Qualifications of Fire Barriers—The wall common with the elevator tower (Rm 192) serves as a barrier and is of 3 h fire-resistive concrete construction. All other walls and the ceiling are constructed of concrete but are not fire rated as they are within fire area F1100. The concrete base mat serves as the floor. There is a nonlabeled door to the corridor (Rm 116).

(5) Combustibles Present:

Fire Loading	Total Heat of Combustion (MJ)
15.25 m of divisional cable trays containing 14 kg/m of XLPE-FR cable insulation	727 MJ/m^2, NCLL (727 MJ/m^2 maximum average) applies.

(6) Detection Provided—Class A supervised POC in the room and manual alarm pull stations at Col. 5.8-A.5 in the corridor.

(7) Suppression Available:

Type	Location/Actuation
Standpipe and hose reel	Col. 5.8-A.5/Manual
ABC hand extinguishers	Col. 5.8-A.5/ Manual

(8) Fire Protection Design Criteria Employed:

(a) The function is located in a room, separate from the rooms which contain safety-related systems.

(b) Fire detection and suppression capability is provided and accessible.

(c) Fire stops are provided for cable tray and piping penetrations through rated fire barriers.

(9) Consequences of Fire—The postulated fire assumes the loss of the function for the equipment in the fire area.

Smoke from a fire will be removed by the normal HVAC System operating in its smoke removal mode.

(10) Consequences of Fire Suppression—Suppression extinguishes the fire. Refer to Section 3.4, “Water Level (Flood) Design”, for the drain system.

(11) Design Criteria Used for Protection Against Inadvertent Operation, Careless Operation or Rupture of the Suppression System:

(a) Location of the manual suppression system external to the room

(b) Refer to Section 3.4, “Water Level (Flood) Design”, for the drain system.

(c) ANSI B31.1 standpipe (rupture unlikely)

(12) Fire Containment or Inhibiting Methods Employed:

(a) The functions are located in a separate fire-resistive enclosure.

(b) Fire stops are provided for cable tray and piping penetrations through fire rated barriers.

(c) The means of fire detection, suppression and alarming are provided and accessible.

(13) Remarks—The sumps in this room serve only areas external to the safety-related pump rooms.

9A.4.1.1.10 Stair # 1 (Rm No. 195)

(1) Fire Area—F1510

(2) Equipment: See Table 9A.6-2

Safety-Related	Provides Core Cooling
No	No

(3) Radioactive Material Present—None.

(4) Qualifications of Fire Barriers—Walls, floor and ceiling are concrete and rated 3 hours for personnel protection. The stair tower services the controlled access areas of all floors of the reactor building. There is a 3 hour rated fire resistive door at each floor elevation. Alternate access is provided by stair No.3, diagonally across the building.

(5) Combustibles Present—No significant quantities of exposed combustibles.

(6) Detection Provided—Class A supervised POC at each building floor elevation and alarm pull stations external to the stair tower and adjacent to the access door at each building floor elevation.

(7) Suppression Available:

Type	Location/Actuation
Standpipe and hose reel	Adjacent to the stair tower at each building floor/Manual
ABC hand extinguishers	Adjacent to the hose reels/Manual

(8) Fire Protection Design Criteria Employed:

(a) The tower is located in a separate fire-resistive enclosure.

(b) Alternate access and egress are provided by a separate stair tower located at a remote location.

(c) Fire detection and suppression capability is provided and accessible.

(9) Consequences of Fire—The postulated fire assumes loss of function of the stair tower. Access to the other stair tower is maintained.

Smoke from a fire will be removed by the normal HVAC System operating in its smoke-removal mode.

(10) Consequences of Fire Suppression—Suppression extinguishes the fire. Refer to Section 3.4, "Water Level (Flood) Design", for the drain system.

(11) Design Criteria Used for Protection Against Inadvertent Operation, Careless Operation or Rupture of the Suppression System:

(a) Location of the manual suppression system external to the room

(b) Refer to Section 3.4, "Water Level (Flood) Design", for the drain system.

(c) ANSI B31.1 standpipe (rupture unlikely)

(d) Alternate access route provided

(12) Fire Containment or Inhibiting Methods Employed:

(a) The functions are located in a separate fire-resistive enclosure.

(b) The means of fire detection, suppression and alarming are provided and accessible.

(13) Remarks—None

9A.4.1.1.11 Elevator # 1 (Rm No. 192)

(1) Fire Area—F1520

(2) Equipment: See Table 9A.6-2

Safety-Related	Provides Core Cooling
No	No

(3) Radioactive Material Present—None.

(4) Qualifications of Fire Barriers—Walls, floor and ceiling are concrete and rated 3 h for personnel protection. The elevator shaft services all floors of the reactor building. The elevator doors are not fire rated. A separate 3 h rated fire-resistive door is provided at each elevator landing doorway.

(5) Combustibles Present—No significant quantities of exposed combustibles.

(6) Detection Provided—Class A supervised POC at each building floor elevation and alarm pull stations adjacent to the access door at each building floor elevation.

(7) Suppression Available:

Type	Location/Actuation
Standpipe and hose reel	Adjacent to the stair entry at each building floor stair door/ Manual
ABC hand extinguishers	Adjacent to the hose reels/ Manual

(8) Fire Protection Design Criteria Employed:

(a) The elevator shaft is located in a separate fire-resistive enclosure.

(b) Alternate access and egress are provided by separate stairs located at a remote location.

(c) Fire detection and suppression capability is provided and accessible.

(9) Consequences of Fire—The postulated fire assumes loss of function of the elevator. Access to the adjacent stair tower and other stair/elevator towers is maintained.

Smoke from a fire will be removed by the normal HVAC System operating in its smoke removal mode.

(10) Consequences of Fire Suppression—Suppression extinguishes the fire. Refer to Section 3.4, “Water Level (Flood) Design”, for the drain system.

(11) Design Criteria Used for Protection Against Inadvertent Operation, Careless Operation or Rupture of the Suppression System:

(a) Location of the manual suppression system external to the tower;

(b) Refer to Section 3.4, “Water Level (Flood) Design”, for the drain system;

(c) ANSI B31.1 standpipe (rupture unlikely); and

(d) Alternate access route provided.

(12) Fire Containment or Inhibiting Methods Employed:

(a) The functions are located in a separate fire-resistive enclosure.

(b) The means of fire detection, suppression and alarming are provided and accessible.

(13) Remarks—None

9A.4.1.1.12 HPCF Room C (Rm No. 130)

(1) Fire Area—F1300

(2) Equipment: See Table 9A.6-2

Safety-Related	Provides Core Cooling
Yes, D3	Yes

(3) Radioactive Material Present—None that can be released as a result of fire.

(4) Qualifications of Fire Barriers—The wall common with the RCIC room forms a barrier between the adjacent division 1 fire area, F1100 and the division 3 fire area F1300 and is of 3 h fire rated concrete construction. The concrete base mat of the building forms the floor for the room. The primary containment acts as one wall of the room. The RHR C room (Rm 132) and Corridor C (Rm 131) are all in fire area F1300, which is a division 3 area and therefore the common walls are not required to be fire barriers. There is a, pressure resistant, water-tight, door to the corridor. All personnel entry and egress is by this single path. Two equipment removal hatches are provided in the ceiling at the –1700 mm elevation.

(5) Combustibles Present:

Fire Loading	Total Heat of Combustion (MJ)
17 m of divisional cable trays containing 14 kg/m of XLPE-FR cable insulation	727 MJ/m^2, NCLL (727 MJ/m^2 maximum average) applies.
51.1 liters of Class III B lube oil.	$1.84x10^3$

(6) Detection Provided—Class A supervised POC in the room and manual alarm pull stations at Col. 6.9-F.9 in the corridor.

(7) Suppression Available:

Type	Location/Actuation
Standpipe and hose reel	Col 6.9-F.9/ Manual
ABC hand extinguishers	Col. 6.9-F.9/Manual

(8) Fire Protection Design Criteria Employed:

(a) The function is located in a fire area which is separate from the fire areas containing equipment which provide alternate means of performing the safety or shutdown function.

(b) Fire detection and suppression capability is provided and accessible.

(c) Fire stops are provided for cable tray and piping penetrations through rated fire barriers.

(9) Consequences of Fire—The postulated fire assumes the loss of the function. The provisions for core cooling systems backup are defined in Subsection 9A.2.5.

Smoke from a fire will be removed by the normal HVAC System operating in its smoke removal mode.

(10) Consequences of Fire Suppression—Suppression extinguishes the fire. Refer to Section 3.4, “Water Level (Flood) Design”, for the drain system.

(11) Design Criteria Used for Protection Against Inadvertent Operation, Careless Operation or Rupture of the Suppression System:

(a) Location of the manual suppression system external to the room

(b) Provision of raised supports for the equipment

(c) Refer to Section 3.4, “Water Level (Flood) Design”, for the drain system.

(d) ANSI B31.1 standpipe (rupture unlikely)

(e) The safety-related function has a remote backup system

(12) Fire Containment or Inhibiting Methods Employed:

(a) The functions are located in a separate fire-resistive enclosure.

(b) Fire stops are provided for cable tray and piping penetrations through fire rated barriers.

(c) The means of fire detection, suppression and alarming are provided and accessible.

(13) Remarks:

(a) The room contains electrical cables in trays. Cable insulation in trays is discussed in Subsection 9A.3.4.

(b) It is assumed that the pump lube oil is contained in an integral reservoir and that there is no exposed piping.

9A.4.1.1.13 RHR Pump Room C (Rm No. 132)

(1) Fire Area—F1300

(2) Equipment: See Table 9A.6-2

Safety-Related	Provides Core Cooling
Yes, D1, D2, D3 & D4	Yes

(3) Radioactive Material Present—None that can be released as a result of fire.

(4) Qualifications of Fire Barriers—The primary containment acts as one wall of the room. The concrete base mat serves as the floor of the room. With exception of the walls common to rooms 134 and 126 the remainder of the walls and ceiling are room partitions within fire area F1300 and, therefore, are not fire rated. They are all of concrete construction. There is a pressure resistant, water-tight door to the corridor. All personnel entry and egress is by this single path. Two equipment removal hatches are provided in the ceiling at the –1700 elevation.

(5) Combustibles Present:

Fire Loading	Total Heat of Combustion (MJ)
17 m of divisional cable trays containing 14 kg/m of XLPE-FR cable insulation	727 MJ/m^2, NCLL (727 MJ/m^2 maximum average) applies.
106 liters of Class III B lube oil.	4.6×10^3

(6) Detection Provided—Class A supervised POC in the room and manual alarm pull stations at Col. 6.9-F.9 in the corridor.

(7) Suppression Available:

Type	Location/Actuation
Standpipe and hose reel	Col. 6.9-F.9/Manual
ABC hand extinguishers	Col. 6.9-F.9/Manual

(8) Fire Protection Design Criteria Employed:

(a) The function is located in a fire area which is separate from the fire areas containing equipment which provide alternate means of performing the safety or shutdown function.

(b) Fire detection and suppression capability is provided and accessible.

(c) Fire stops are provided for cable tray and piping penetrations through rated fire barriers.

(9) Consequences of Fire—The postulated fire assumes the loss of the function. The provisions for core cooling systems backup are defined in Subsection 9A.2.5.

Smoke from a fire will be removed by the normal HVAC System operating in its smoke removal mode.

(10) Consequences of Fire Suppression—Suppression extinguishes the fire. Refer to Section 3.4, “Water Level (Flood) Design”, for the drain system.

(11) Design Criteria Used for Protection Against Inadvertent Operation, Careless Operation or Rupture of the Suppression System:

(a) Location of the manual suppression system external to the room

(b) Provision of raised supports for the equipment

(c) Refer to Section 3.4, “Water Level (Flood) Design”, for the drain system.

(d) ANSI B31.1 standpipe (rupture unlikely)

(e) The safety-related function has a remote backup system

(12) Fire Containment or Inhibiting Methods Employed:

(a) The functions are located in a separate fire-resistive enclosure.

(b) Fire stops are provided for cable tray and piping penetrations through fire rated barriers.

(c) The means of fire detections, suppression and alarming are provided and accessible.

(13) Remarks:

(a) The room contains electrical cables in trays. Cable insulation in trays is discussed in Subsection 9A.3.4.

(b) It is assumed that the pump lube oil is contained in an integral reservoir and that there is no exposed piping.

(c) Temperature elements E31-TE008J, K, L, M, E31-TE031J, and E31-TE032J of the leak detection system are mounted in this room. See Section 9A.5, Special Cases, for an explanation of why this is required and why it is deemed to be acceptable.

9A.4.1.1.14 Not Used

9A.4.1.1.15 CRD Pump Room (Rm No.133)

(1) Fire Area—F1200

(2) Equipment: See Table 9A.6-2

Safety-Related	Provides Core Cooling
No	Yes*

* As a secondary effect of the control rod drive water and the reactor internal pump flushing water supplied to the reactor vessel.

(3) Radioactive Material Present—None that can be released as a result of fire.

(4) Qualifications of Fire Barriers—The room is a bay opening off of corridor B (Rm 134). The wall common with RHR pump room C serves as a fire barrier between division 2 and 3, and is of 3 h fire resistive concrete construction. The remainder of the walls and ceiling are room partitions within fire area F1200 and, therefore, are not fire rated. They are all of concrete construction. The concrete base mat serves as the floor. All personnel entry and egress is through the open front of the bay.

(5) Combustibles Present:

Fire Loading	Total Heat of Combustion (MJ)
11.3 m of divisional cable trays containing 14 kg/m of XLPE-FR cable insulation	727 MJ/m^2, NCLL (727 MJ/m2 maximum average) applies.
151.4 liters of Class III B lube oil.	6.57×10^3

(6) Detection Provided—Class A supervised POC in the room and manual alarm pull stations at Col. 6.9-F.9 in the corridor.

(7) Suppression Available:

Type	Location/Actuation
Ordinary hazard, dry pipe, closed head sprinklers, having a water density of 6.1 $L/min/m^2$ per head.	All/Automatic
Standpipe and hose reel	Col. 6.9-F.9/ Manual
ABC hand extinguishers	Col. 6.9-F.9/Manual

(8) Fire Protection Design Criteria Employed:

(a) The function is located in a room, separate from the rooms which contain safety-related systems.

(b) Fire detection and suppression capability is provided and accessible.

(c) Fire stops are provided for cable tray and piping penetrations through rated fire barriers.

(9) Consequences of Fire—The postulated fire assumes the loss of the function which results in a plant scram and continuance of core cooling by the appropriate systems located in other fire areas.

Smoke from a fire will be removed by the normal HVAC System operating in its smoke removal mode.

(10) Consequences of Fire Suppression—Suppression extinguishes the fire. Refer to Section 3.4, “Water Level (Flood) Design”, for the drain system.

(11) Design Criteria Used for Protection Against Inadvertent Operation, Careless Operation or Rupture of the Suppression System:

(a) Location of the manual suppression system external to the room

(b) Provision of raised supports for the equipment

(c) Refer to Section 3.4, "Water Level (Flood) Design", for the drain system.

(d) ANSI B31.1 standpipe (rupture unlikely)

(12) Fire Containment or Inhibiting Methods Employed:

(a) The function is located remotely from other equipment of other systems within the same fire area.

(b) The means of fire detection, suppression and alarming are provided and accessible.

(13) Remarks:

(a) The room contains electrical cables in trays. Cable insulation in trays is discussed in Subsection 9A.3.4.

(b) The pump lube oil is contained in an integral reservoir but there is externally exposed piping, therefore, sprinklers are provided.

(c) The pumps are powered from the divisions 1 and 2 emergency buses and are sitting in a division 3 area. Justification for this exception is given in Section 9A.3.

9A.4.1.1.16 CRD HCU Quadrant II/III Room (Rm No. 126)

(1) Fire Area—F1200

(2) Equipment: See Table 9A.6-2

Safety-Related	Provides Core Cooling
Yes, D2 & D3	Yes

(3) Radioactive Material Present—None that can be released as a result of fire.

(4) Qualifications of Fire Barriers—The room is completely within fire area F1200, consequently, the floor, and walls are not required to have a fire rating. They are all of concrete construction, however. The concrete base mat serves

as the floor. There are two nonlabeled doors to the corridors (Rooms 123 and 134). A nonlabeled door provides entry to rooms 125 and 126. The ceiling is a 3 h fire barrier.

(5) Combustibles Present:

Fire Loading	Total Heat of Combustion (MJ)
15.25 m of divisional cable trays containing 14 kg/m of XLPE-FR cable insulation	727 MJ/m^2, NCLL (727 MJ/m^2 maximum average) applies.

(6) Detection Provided—Class A supervised POC in the room and manual alarm pull stations at Col. 2.5-F.8 in the corridor.

(7) Suppression Available:

Type	Location/Actuation
Standpipe and hose reel	Col. 2.5-F.8/Manual
ABC hand extinguishers	Col. 2.5-F.8/Manual

(8) Fire Protection Design Criteria Employed:

(a) The function is located in a fire area which is separate from the fire areas containing equipment which provide alternate means of performing the safety or shutdown function.

(b) Fire detection and suppression capability is provided and accessible.

(c) Fire stops are provided for cable tray and piping penetrations through rated fire barriers.

(9) Consequences of Fire—The postulated fire assumes the loss of the function for the equipment in the fire area. The scram function is fail safe and would therefore scram as a result of a fire.

Smoke from a fire will be removed by the normal HVAC System operating in its smoke removal mode.

(10) Consequences of Fire Suppression—Suppression extinguishes the fire. Refer to Section 3.4, “Water Level (Flood) Design”, for the drain system.

(11) Design Criteria Used for Protection Against Inadvertent Operation, Careless Operation or Rupture of the Suppression System:

(a) Location of the manual suppression system external to the room

(b) Provision of raised supports for the equipment

(c) Refer to Section 3.4, "Water Level (Flood) Design", for the drain system.

(d) ANSI B31.1 standpipe (rupture unlikely)

(e) The safety-related function has a remote backup system and is fail safe

(12) Fire Containment or Inhibiting Methods Employed:

(a) The functions are located in a separate fire-resistive enclosure.

(b) Fire stops are provided for cable tray and piping penetrations through fire rated barriers.

(c) The means of fire detection, suppression and alarming are provided and accessible.

(13) Remarks—The hydraulic control lines from the scram bank are routed up to elevation 4000 where they enter containment through the top of the personnel lock.

9A.4.1.1.17 Not Used

9A.4.1.1.18 Corridor B (Rm No. 123/134)

(1) Fire Area—F1200

(2) Equipment: See Table 9A.6-2

Safety-Related	Provides Core Cooling
Yes, D2	Yes

(3) Radioactive Material Present—None that can be released as a result of fire.

(4) Qualifications of Fire Barriers—The walls common with the stairwell (Rm 193), the elevator (Rm 194), and the exterior wall are all fire barriers of 3 h fire-resistive concrete construction. The primary containment acts as one wall of the room in the area between the HPCF pump room (Rm 122) and CUW heat exchanger room (Rm 141). The remainder of the walls are within fire area F1200 and, therefore, are not fire rated. The concrete base mat of the building forms the floor. There are pressure resistant, water-tight doors

providing access to the HPCF pump room B (Rm 122), RHR pump room B (Rm 121), and CRD HCU II/III room (Rm 126). Accesses to this division 2 corridor is provided via a 3 h fire resistive door from division 3 (Rm 131) at row F.7-G.0, Col. 6.0. Also, this division 2 corridor continues as room 142 at row D. Portion of the ceiling area F.7-G.0 and 2.0-6.0 is a 3 h fire barrier, but the remaining portion is within fire area F1200, and therefore is not fire rated.

(5) Combustibles Present:

Fire Loading	Total Heat of Combustion (MJ)
Divisional cable trays containing 14 kg/m of XLPE-FR cable insulation	727 MJ/m^2, NCLL (727 MJ/m^2 maximum average) applies.

(6) Detection Provided—Class A supervised POC in the corridor and manual alarm pull stations at Col. 2.5-F.8 and 1.1-D.0.

(7) Suppression Available:

Type	Location/Actuation
Standpipe and hose reel	Col. 2.5-F.8 & 1.1-D.0/Manual
ABC hand extinguishers	Col. 2.5-F.8 & 1.1-D.0/Manual

(8) Fire Protection Design Criteria Employed:

(a) The function is located in a fire area which is separate from the fire areas containing equipment which provide alternate means of performing the safety or shutdown function.

(b) Fire detection and suppression capability is provided and accessible.

(c) Fire stops are provided for cable tray and piping penetrations through rated fire barriers.

(9) Consequences of Fire—The postulated fire assumes the loss of the function. The provisions for core cooling systems backup are defined in Section 9A.2.5. Smoke from a fire will be removed by the normal HVAC System operating in its smoke removal mode.

(10) Consequences of Fire Suppression—Suppression extinguishes the fire. Refer to Section 3.4, “Water Level (Flood) Design”, for the drain system.

(11) Design Criteria Used for Protection Against Inadvertent Operation, Careless Operation or Rupture of the Suppression System:

(a) Location of the manual suppression system in the corridor where there is a minimum of safety-related equipment

(b) Provision of raised supports for the equipment

(c) Refer to Section 3.4, "Water Level (Flood) Design", for the drain system.

(d) ANSI B31.1 standpipe (rupture unlikely)

(12) Fire Containment or Inhibiting Methods Employed:

(a) The functions are located in a separate fire-resistive enclosure.

(b) Fire stops are provided for cable tray and piping penetrations through fire rated barriers.

(c) The means of fire detection, suppression and alarming are provided and accessible.

(13) Remarks—The corridor contains piping and cable trays in its upper elevation.

9A.4.1.1.19 Quadrant B Sump Room (Rm No. 124)

(1) Fire Area—F1200

(2) Equipment: See Table 9A.6-2

Safety-Related	Provides Core Cooling
Yes, D2	No

(3) Radioactive Material Present—None that can be released as a result of fire. Normally the sumps would not be contaminated. If they did become slightly contaminated prior to a fire, any contamination release as a result of boiling initiated by the heat of the fire would be contained within secondary containment.

(4) Qualifications of Fire Barriers—The wall common with elevator No.2 and the ceiling are a 3 h fire barrier. All other walls are constructed of concrete but are not fire rated as they are within fire area F1200. The concrete base mat serves as the floor. There is a nonlabeled door to the corridor (Rm 123).

(5) Combustibles Present:

Fire Loading	Total Heat of Combustion (MJ)
15.25 m of divisional cable trays containing 14 kg/m of XLPE-FR cable insulation	727 MJ/m^2, NCLL (727 MJ/m^2 maximum average) applies.

(6) Detection Provided—Class A supervised POC in the room and manual alarm pull stations at Col. 2.5 and F.8 in the corridor.

(7) Suppression Available:

Type	Location/Actuation
Standpipe and hose reel	Col. 2.5-F.8/Manual
ABC hand extinguishers	Col. 2.5-F.8/Manual

(8) Fire Protection Design Criteria Employed:

(a) The function is located in a fire area which is separate from the fire areas containing equipment which provide alternate means of performing the safety or shutdown function.

(b) Fire detection and suppression capability is provided and accessible.

(c) Fire stops are provided for cable tray and piping penetrations through rated fire barriers.

(9) Consequences of Fire—The postulated fire assumes the loss of the function for the equipment in the fire area.

Smoke from a fire will be removed by the normal HVAC System operating in its smoke removal mode.

(10) Consequences of Fire Suppression—Suppression extinguishes the fire. Refer to Section 3.4, “Water Level (Flood) Design”, for the drain system.

(11) Design Criteria Used for Protection Against Inadvertent Operation, Careless Operation or Rupture of the Suppression System:

(a) Location of the manual suppression system external to the room

(b) Refer to Section 3.4, “Water Level (Flood) Design”, for the drain system.

(c) ANSI B31.1 standpipe (rupture unlikely)

(12) Fire Containment or Inhibiting Methods Employed:

(a) The functions are located in a separate fire-resistive enclosure.

(b) Fire stops are provided for cable tray and piping penetrations through fire rated barriers.

(c) The means of fire detection, suppression and alarming are provided and accessible.

(13) Remarks—The sumps in this room serve only areas external to the safety-related pump rooms.

9A.4.1.1.20 Stair # 3 (Rm No. 193)

(1) Fire Area—F1530

(2) Equipment: See Table 9A.6-2

Safety-Related	Provides Core Cooling
No	No

(3) Radioactive Material Present—None.

(4) Qualifications of Fire Barriers—Walls, floor and ceiling are concrete and rated 3 hours for personnel protection. The stair tower services the controlled access areas of all floors of the reactor building. There is a 3 hour rated fire resistive door at each floor elevation. Alternate access is provided by stair #1, diagonally across the building.

(5) Combustibles Present—No significant quantities of exposed combustibles.

(6) Detection Provided—Class A supervised POC at each building floor elevation and alarm pull stations external to the stair tower and adjacent to the access door at each building floor elevation.

(7) Suppression Available:

Type	Location/Actuation
Standpipe and hose reel	Adjacent to the stair tower at each building floor/Manual
ABC hand extinguishers	Adjacent to the hose reels/Manual

(8) Fire Protection Design Criteria Employed:

(a) The function is located in a room, separate from the rooms which contain safety-related systems.

(b) Alternate access and egress are provided by a separate stair tower located at a remote location.

(c) Fire detection and suppression capability is provided and accessible.

(9) Consequences of Fire—The postulated fire assumes loss of function of the stair tower. Access to the other stair tower is maintained.

Smoke from a fire will be removed by the normal HVAC System operating in its smoke removal mode.

(10) Consequences of Fire Suppression—Suppression extinguishes the fire. Refer to Section 3.4, “Water Level (Flood) Design”, for the drain system.

(11) Design Criteria Used for Protection Against Inadvertent Operation, Careless Operation or Rupture of the Suppression System:

(a) Location of the manual suppression system external to the room

(b) Refer to Section 3.4, “Water Level (Flood) Design”, for the drain system.

(c) ANSI B31.1 standpipe (rupture unlikely)

(d) Alternate access route provided

(12) Fire Containment or Inhibiting Methods Employed:

(a) The functions are located in a separate fire-resistive enclosure.

(b) The means of fire detection, suppression and alarming are provided and accessible.

(13) Remarks—None

9A.4.1.1.21 Elevator # 2 (Rm No. 194)

(1) Fire Area—F1540

(2) Equipment: See Table 9A.6-2

Safety-Related	Provides Core Cooling
No	No

(3) Radioactive Material Present—None.

(4) Qualifications of Fire Barriers—Walls, floor and ceiling are concrete and rated 3 hours for personnel protection. The elevator shaft services all floors of the reactor building. The elevator doorways are provided with 3 h rated fire doors at each elevator landing.

(5) Combustibles Present—No significant quantities of exposed combustibles.

(6) Detection Provided—Class A supervised POC at each building floor elevation and alarm pull stations adjacent to the access door at each building floor elevation.

(7) Suppression Available:

Type	Location/Actuation
Standpipe and hose reel	Adjacent to the stair tower at each building floor/Manual
ABC hand extinguishers	Adjacent to the hose reels/Manual

(8) Fire Protection Design Criteria Employed:

(a) The function is located in a room, separate from the rooms which contain safety-related systems.

(b) Alternate access and egress are provided by separate stairs located at a remote location.

(c) Fire detection and suppression capability is provided and accessible.

(9) Consequences of Fire—The postulated fire assumes loss of function of the elevator. Access to the adjacent stair tower and other stair/elevator towers is maintained.

Smoke from a fire will be removed by the normal HVAC System operating in its smoke removal mode.

(10) Consequences of Fire Suppression—Suppression extinguishes the fire. Refer to Section 3.4, "Water Level (Flood) Design", for the drain system.

(11) Design Criteria Used for Protection Against Inadvertent Operation, Careless Operation or Rupture of the Suppression System:

(a) Location of the manual suppression system external to the tower

(b) Refer to Section 3.4, "Water Level (Flood) Design", for the drain system.

(c) ANSI B31.1 standpipe (rupture unlikely)

(d) Alternate access route provided

(12) Fire Containment or Inhibiting Methods Employed:

(a) The functions are located in a separate fire-resistive enclosure.

(b) The means of fire detection, suppression and alarming are provided and accessible.

(13) Remarks—None

9A.4.1.1.22 RHR Pump Room B (Rm No. 121)

(1) Fire Area—F1200

(2) Equipment: See Table 9A.6-2

Safety-Related	Provides Core Cooling
Yes, D1, D2, D3, D4	Yes

(3) Radioactive Material Present—None that can be released as a result of fire.

(4) Qualifications of Fire Barriers—The wall common with the stair tower is of 3 h fire resistive concrete construction. The primary containment acts as one wall of the room. The floor is the concrete base mat. The remainder of the walls and ceiling are room partitions within fire area F1200 and, therefore, are not fire rated. They are all of concrete construction. There is a pressure resistant, water-tight door to the corridor. All personnel entry and egress is by this single path. Two equipment removal hatches are provided in the ceiling at the –1700 mm elevation.

(5) Combustibles Present:

Fire Loading	Total Heat of Combustion (MJ)
17 m of divisional cable trays containing 14 kg/m of XLPE-FR cable insulation	727 MJ/m^2, NCLL (727 MJ/m^2 maximum average) applies.
106 liters of Class III B lube oil.	4.6×10^3

(6) Detection Provided—Class A supervised POC in the room and manual alarm pull stations at Col. 1.1-D.0 in the corridor.

(7) Suppression Available:

Type	Location/Actuation
Standpipe and hose reel	Col. 1.1-D.0/Manual
ABC hand extinguishers	Col. 1.1-D.0/Manual

(8) Fire Protection Design Criteria Employed:

(a) The function is located in a fire area which is separate from the fire areas containing equipment which provide alternate means of performing the safety or shutdown function.

(b) Fire detection and suppression capability is provided and accessible.

(c) Fire stops are provided for cable tray and piping penetrations through rated fire barriers.

(9) Consequences of Fire—The postulated fire assumes the loss of the function. The provisions for core cooling systems backup are defined in Subsection 9A.2.5.

Smoke from a fire will be removed by the normal HVAC System operating in its smoke removal mode.

(10) Consequences of Fire Suppression—Suppression extinguishes the fire.Refer to Section 3.4, “Water Level (Flood) Design”, for the drain system.

(11) Design Criteria Used for Protection Against Inadvertent Operation, Careless Operation or Rupture of the Suppression System:

(a) Location of the manual suppression system external to the room

(b) Provision of raised supports for the equipment

(c) Refer to Section 3.4, "Water Level (Flood) Design", for the drain system.

(d) ANSI B31.1 standpipe (rupture unlikely)

(e) The safety-related function has a remote backup system

(12) Fire Containment or Inhibiting Methods Employed:

(a) The functions are located in a separate fire-resistive enclosure.

(b) Fire stops are provided for cable tray and piping penetrations through fire rated barriers.

(c) The means of fire detection, suppression and alarming are provided and accessible.

(13) Remarks:

(a) The room contains electrical cables in trays. Cable insulation in trays is discussed in Subsection 9A.3.4.

(b) It is assumed that the pump lube oil is contained in an integral reservoir and that there is no exposed piping.

(c) Temperature elements E31-TE008E, F, G, H of the leak detection system are mounted in this room.

The G51-F001 (MO division 2 isolation valve) of the SPCS is mounted in this room. See Subsection 9A.5, Special Cases, for an explanation of why this is required and why it is deemed to be acceptable.

9A.4.1.1.23 HPCF Pump Room B (Rm No. 122)

(1) Fire Area—F1200

(2) Equipment: See Table 9A.6-2

Safety-Related	Provides Core Cooling
Yes, D2	Yes

(3) Radioactive Material Present—None that can be released as a result of fire.

(4) Qualifications of Fire Barriers—The room is entirely within fire area F1200, therefore none of the walls, ceiling or floor are required to function as rated fire barriers. They are all of concrete construction, however. The concrete base mat of the building forms the floor for the room. The primary containment acts as one wall of the room. There is a pressure resistant, water-tight, door to the corridor. All personnel entry and egress is by this single path. Two equipment removal hatches are provided in the ceiling at the –1700 mm elevation.

(5) Combustibles Present:

Fire Loading	Total Heat of Combustion (MJ)
17 m of divisional cable trays containing 14 kg/m of XLPE-FR cable insulation	727 MJ/m^2, NCLL (727 MJ/m^2 maximum average) applies.
51.1 liters of Class III B lube oil.	4.6×10^3

(6) Detection Provided—Class A supervised POC in the room and manual alarm pull stations at Col. 1.1-D.0 in the corridor.

(7) Suppression Available:

Type	Location/Actuation
Standpipe and hose reel	Col. 1.1-D.0/Manual
ABC hand extinguishers	Col. 1.1-D.0/Manual

(8) Fire Protection Design Criteria Employed:

(a) The function is located in a fire area which is separate from the fire areas containing equipment which provide alternate means of performing the safety or shutdown function.

(b) Fire detection and suppression capability is provided and accessible.

(c) Fire stops are provided for cable tray and piping penetrations through rated fire barriers.

(9) Consequences of Fire—The postulated fire assumes the loss of the function. The provisions for core cooling systems backup are defined in Subsection 9A.2.5.

Smoke from a fire will be removed by the normal HVAC System operating in its smoke removal mode.

(10) Consequences of Fire Suppression—Suppression extinguishes the fire. Refer to Section 3.4, "Water Level (Flood) Design", for the drain system.

(11) Design Criteria Used for Protection Against Inadvertent Operation, Careless Operation or Rupture of the Suppression System:

(a) Location of the manual suppression system external to the room

(b) Provision of raised supports for the equipment

(c) Refer to Section 3.4, "Water Level (Flood) Design", for the drain system.

(d) ANSI B31.1 standpipe (rupture unlikely)

(e) The safety-related function has a remote backup system

(12) Fire Containment or Inhibiting Methods Employed:

(a) The functions are located in a separate fire-resistive enclosure.

(b) Fire stops are provided for cable tray and piping penetrations through fire rated barriers.

(c) The means of fire detection, suppression and alarming are provided and accessible.

(13) Remarks:

(a) The room contains electrical cables in trays. Cable insulation in trays is discussed in Subsection 9A.3.4.

(b) It is assumed that the pump lube oil is contained in an integral reservoir and that there is no exposed piping.

9A.4.1.1.24 Not Used

9A.4.1.1.25 CUW Nonregen Hx (Rm No. 141)

(1) Fire Area—F1200

(2) Equipment: See Table 9A.6-2

Safety-Related	Provides Core Cooling
No	Yes

(3) Radioactive Material Present—None that can be released as a result of fire.

(4) Qualifications of Fire Barriers—Walls and ceiling are concrete and are not fire rated. The concrete base mat serves as the floor. There is a nonrated door to the corridor (Rm 123) All personnel entry and egress is by this single path. Equipment removal is through removable plugs in the wall at row D.0.

(5) Combustibles Present—No significant quantities of exposed combustibles. 727 MJ/m^2 NCLL (727 MJ/m^2 maximum average) applies.

(6) Detection Provided—Class A supervised POC in the room and manual alarm pull stations at Col. 1.1-D.0 in the corridor.

(7) Suppression Available:

Type	Location/Actuation
Standpipe and hose reel	Col. 1.1-D.0/Manual
ABC hand extinguishers	Col. 1.1-D.0/Manual

(8) Fire Protection Design Criteria Employed:

(a) The function is located in a room separate from the rooms which contain safety-related equipment.

(b) Fire detection and suppression capability is provided and accessible.

(9) Consequences of Fire—The postulated fire assumes the loss of the function. The function is not safety-related, therefore the loss of the function is acceptable.

Smoke from a fire will be removed by the normal HVAC System operating in its smoke removal mode.

(10) Consequences of Fire Suppression—Suppression extinguishes the fire. Refer to Section 3.4, “Water Level (Flood) Design”, for the drain system.

(11) Design Criteria Used for Protection Against Inadvertent Operation, Careless Operation or Rupture of the Suppression System:

(a) Location of the manual suppression system external to the room

(b) Provision of raised supports for the equipment

(c) Refer to Section 3.4, “Water Level (Flood) Design”, for the drain system.

(d) ANSI B31.1 standpipe (rupture unlikely)

(12) Fire Containment or Inhibiting Methods Employed:

(a) The functions are located in a separate fire-resistive enclosure.

(b) The means of fire detection, suppression and alarming are provided and accessible.

(13) Remarks:

(a) The CUW System is capable of removing a small amount of decay heat from the reactor vessel during certain conditions.

(b) Leak Detection system temperature elements E31-TE009E, F, G and H are located in this room.

(c) See Section 9A.5, Special Cases, for an explanation of why this is required and why it is deemed to be acceptable.

9A.4.1.1.26 SPCU Pump Room (Rm No. 140)

(1) Fire Area—F1200

(2) Equipment: See Table 9A.6-2

Safety--Related	Provides Core Cooling
Yes, D1,D2	No

(3) Radioactive Material Present—None that can be released as a result of fire.

(4) Qualifications of Fire Barriers—Walls and ceiling are concrete and are not fire rated. One wall is formed by the containment. The concrete base mat serves as the floor. There is one nonrated door to the corridor (Rm 142). All personnel entry and egress is by this single path.

(5) Combustibles Present—No significant quantities of exposed combustibles. 727 MJ/m^2 NCLL (727 MJ/m^2 maximum average) applies.

(6) Detection Provided—Class A supervised POC in the room and manual alarm pull stations at Col. 1.1-D.0 in the corridor.

(7) Suppression Available:

Type	Location/Actuation
Standpipe and hose reel	Col. 1.1-D.0/Manual
ABC hand extinguishers	Col. 1.1-D.0/Manual

(8) Fire Protection Design Criteria Employed:

(a) The function is located in a room separate from the rooms which contain safety-related systems.

(b) Fire detection and suppression capability is provided and accessible.

(9) Consequences of Fire—The postulated fire assumes the loss of the function. The function is not safety-related and its loss is acceptable.

Smoke from a fire will be removed by the normal HVAC System operating in its smoke removal mode.

(10) Consequences of Fire Suppression—Suppression extinguishes the fire. Refer to Section 3.4, “Water Level (Flood) Design”, for the drain system.

(11) Design Criteria Used for Protection Against Inadvertent Operation, Careless Operation or Rupture of the Suppression System:

(a) Location of the manual suppression system external to the room

(b) Provision of raised supports for the equipment

(c) Refer to Section 3.4, “Water Level (Flood) Design”, for the drain system.

(d) ANSI B31.1 standpipe (rupture unlikely)

(12) Fire Containment or Inhibiting Methods Employed:

(a) The functions are located in a separate fire-resistive enclosure.

(b) The means of fire detection, suppression and alarming are provided and accessible.

(13) Remarks—The G51-F001 (MO division 2 isolation valve) of the SPCS is mounted in this room. See Section 9A.5, Special Cases, for an explanation of why this is required and why it is deemed to be acceptable.

9A.4.1.1.27 Not Used

9A.4.1.1.28 Not Used

9A.4.1.1.29 CUW Pump B Room (Rm No. 146)

(1) Fire Area—F1200

(2) Equipment: See Table 9A.6-2

Safety-Related	Provides Core Cooling
Yes, D1, D3	Yes

(3) Radioactive Material Present—None that can be released as a result of fire.

(4) Qualifications of Fire Barriers—The walls are concrete and are not fire rated. The concrete base mat serves as the floor. The room does not have a ceiling so that it is really a pit which is open at elevation –5100 mm. There is a monorail above the pit for removing the pump for maintenance. There is a shielding door to the adjacent maintenance area (Rm 148).

(5) Combustibles Present—No significant quantities of exposed combustibles. 727 MJ/m^2 NCLL (727 MJ/m^2 maximum average) applies.

(6) Detection Provided—Class A supervised POC in the room and manual alarm pull stations at Col. 1.1-A.1 in the corridor.

(7) Suppression Available:

Type	Location/Actuation
Standpipe and hose reel	Col. 1.1-A.1/Manual
ABC hand extinguishers	Col. 1.1-A.1/Manual

(8) Fire Protection Design Criteria Employed:

(a) The function is located in a room separate from the rooms which contain safety-related equipment.

(b) Fire detection and suppression capability is provided and accessible.

(9) Consequences of Fire—The postulated fire assumes the loss of the function. The function is not safety-related, therefore the loss of the function is acceptable.

Smoke from a fire will be removed by the normal HVAC System operating in its smoke removal mode.

(10) Consequences of Fire Suppression—Suppression extinguishes the fire. Refer to Section 3.4, "Water Level (Flood) Design", for the drain system.

(11) Design Criteria Used for Protection Against Inadvertent Operation, Careless Operation or Rupture of the Suppression System:

(a) Location of the manual suppression system external to the room

(b) Provision of raised supports for the equipment

(c) Refer to Section 3.4, "Water Level (Flood) Design", for the drain system.

(d) ANSI B31.1 standpipe (rupture unlikely)

(12) Fire Containment or Inhibiting Methods Employed:

(a) The function is located in a separate fire-resistive enclosure.

(b) The means of fire detection, suppression and alarming are provided and accessible.

(13) Remarks:

(a) The CUW System is capable of removing a small amount of decay heat from the reactor vessel during certain conditions.

(b) Temperature elements E31-TE010A and C E31-TE011A and C, and E31-TE012A and C of the Leak Detection System are mounted in this room.

(c) See Section 9A.5, Special Cases, for an explanation of why this is required and why it is deemed to be acceptable.

9A.4.1.1.30 CUW Pump A Room (Rm No. 147)

(1) Fire Area—1200

(2) Equipment: See Table 9A.6-2

Safety-Related	Provides Core Cooling
Yes, D1, D2, D3, & D4	Yes

(3) Radioactive Material Present—None that can be released as a result of fire.

(4) Qualifications of Fire Barriers—The walls are concrete and are not fire rated. The concrete base mat serves as the floor. The room does not have a ceiling so that it is really a pit which is open at elevation –5300 mm. There is a monorail above the pit for removing the pump for maintenance. There is a shielding door to the adjacent maintenance area (Rm 148).

(5) Combustibles Present—No significant quantities of exposed combustibles. 727 MJ/m^2 NCLL (727 MJ/m^2 maximum average) applies.

(6) Detection Provided—Class A supervised POC in the room and manual alarm pull stations at Col. 1.1-A.1 in the corridor.

(7) Suppression Available:

Type	Location/Actuation
Standpipe and hose reel	Col. 1.1-A.1/Manual
ABC hand extinguishers	Col. 1.1-A.1/Manual

(8) Fire Protection Design Criteria Employed:

(a) The function is located in a room separate from the rooms which contain safety-related equipment.

(b) Fire detection and suppression capability is provided and accessible.

(9) Consequences of Fire—The postulated fire assumes the loss of the function. The function is not safety-related, therefore the loss of the function is acceptable.

Smoke from a fire will be removed by the normal HVAC System operating in its smoke removal mode.

(10) Consequences of Fire Suppression—Suppression extinguishes the fire. Refer to Section 3.4, “Water Level (Flood) Design”, for the drain system.

(11) Design Criteria Used for Protection Against Inadvertent Operation, Careless Operation or Rupture of the Suppression System:

(a) Location of the manual suppression system external to the room

(b) Provision of raised supports for the equipment

(c) Refer to Section 3.4, “Water Level (Flood) Design”, for the drain system.

(d) ANSI B31.1 standpipe (rupture unlikely)

(12) Fire Containment or Inhibiting Methods Employed:

(a) The function is located in a separate fire-resistive enclosure.

(b) The means of fire detection, suppression and alarming are provided and accessible.

(13) Remarks:

(a) The CUW System is capable of removing a small amount of decay heat from the reactor vessel during certain conditions.

(b) Leak detection system temperature elements E31-TE009J, K, L, and M are located in this room.

(c) See Section 9A.5, Special Cases, for an explanation of why this is required and why it is deemed to be acceptable.

9A.4.1.1.31 CUW Pump Maintenance Area (Rm No. 148)

(1) Fire Area—F1200

(2) Equipment: None, other than when maintenance of a CUW pump is being performed.

Safety-Related	Provides Core Cooling
No	No

(3) Radioactive Material Present—None that can be released as a result of fire.

(4) Qualifications of Fire Barriers—The walls are concrete and are not fire rated. The concrete base mat serves as the floor. One each shield door provides access to the A and B pump rooms. The top of the room is open to provide access by the mono rail crane above the room. A nonrated door opens to the corridor (Rm 142). All personnel entry and egress is by this single path from the corridor.

(5) Combustibles Present—No significant quantities of exposed combustibles. 727 MJ/m^2 NCLL (727 MJ/m^2 maximum average) applies.

(6) Detection Provided—Class A supervised POC in the room and manual alarm pull stations at Col. 1.1-A.1 in the corridor.

(7) Suppression Available:

Type	Location/Actuation
Standpipe and hose reel	Col. 1.1-A.1/Manual
ABC hand extinguishers	Col. 1.1-A.1/Manual

(8) Fire Protection Design Criteria Employed:

(a) The function is located in a room, separate from the rooms which contain safety-related systems.

(b) Fire detection and suppression capability is provided and accessible.

(9) Consequences of Fire—The postulated fire assumes the loss of the function. Temporary loss of this system which is not safety-related is acceptable.

Smoke from a fire will be removed by the normal HVAC System operating in its smoke removal mode.

(10) Consequences of Fire Suppression—Suppression extinguishes the fire. Refer to Section 3.4, “Water Level (Flood) Design”, for the drain system.

(11) Design Criteria Used for Protection Against Inadvertent Operation, Careless Operation or Rupture of the Suppression System:

(a) Location of the manual suppression system external to the room

(b) Refer to Section 3.4, “Water Level (Flood) Design”, for the drain system.

(c) ANSI B31.1 standpipe (rupture unlikely)

(12) Fire Containment or Inhibiting Methods Employed:

The functions are located in a separate fire-resistive enclosure.

(13) Remarks:

(a) The room contains no exposed electrical cables.

(b) The room is cooled by the Reactor Building HVAC System, which is not redundant or safety grade. A safety-grade system is not required.

9A.4.1.1.32 Corridor D (Rm No. 142)

(1) Fire Area—F1200

(2) Equipment: See Table 9A.6-2

Safety-Related	Provides Core Cooling
Yes, D2	Yes

(3) Radioactive Material Present—None that can be released as a result of fire.

(4) Qualifications of Fire Barriers—With the exception of the exterior walls, the ceiling, floor and all walls are concrete but do not serves as fire barriers as they are within division 2 fire area F1200.There is a stair case located between the CUW pump rooms (Rm 146 and 147) and the CUW Nonregen Hx room (Rm 141) leading to the CUW valve/pipe space room (Rm 143) at elevation -5100 mm. The ceiling over this portion of the corridor is at elevation -5150 mm. The concrete base mat of the building forms the floor. Non fire rated doors are provided for access from the corridor to the adjacent rooms and stair case. The corridor opens into corridor B at D.0 and terminates at a 3 h fire-resistive B label door leading to corridor A at column 2.6. Division 2 reactor building closed cooling water piping is routed in the top of the corridor.

(5) Combustibles Present:

Fire Loading	Total Heat of Combustion (MJ)
Divisional cable trays containing 14 kg/m of XLPE-FR cable insulation	727 MJ/m^2, NCLL (727 MJ/m^2 maximum average) applies.

(6) Detection Provided—Class A supervised POC in the corridor and manual alarm pull stations at Col. 1.1-A.1.

(7) Suppression Available:

Type	Location/Actuation
Standpipe and hose reel	Col. 1.1-A.1/Manual
ABC hand extinguishers	Col. 1.1-A.1/Manual

(8) Fire Protection Design Criteria Employed:

(a) The function is located in a room, separate from the rooms which contain safety-related systems.

(b) Fire detection and suppression capability is provided and accessible.

(c) Fire stops are provided for cable tray and piping penetrations through rated fire barriers.

(9) Consequences of Fire—The postulated fire assumes the loss of the function. The provisions for core cooling systems backup are defined in Subsection 9A.2.5.

Smoke from a fire will be removed by the normal HVAC System operating in its smoke removal mode.

(10) Consequences of Fire Suppression—Suppression extinguishes the fire. Refer to Section 3.4, "Water Level (Flood) Design", for the drain system.

(11) Design Criteria Used for Protection Against Inadvertent Operation, Careless Operation or Rupture of the Suppression System:

(a) Location of the manual suppression system in the corridor where there is a minimum of safety-related equipment

(b) Provision of raised supports for the equipment

(c) Refer to Section 3.4, "Water Level (Flood) Design", for the drain system.

(d) ANSI B31.1 standpipe (rupture unlikely)

(12) Fire Containment or Inhibiting Methods Employed:

(a) The functions are located in a separate fire-resistive enclosure.

(b) Fire stops are provided for cable tray and piping penetrations through fire rated barriers.

(c) The means of fire detection, suppression and alarming are provided and accessible.

(13) Remarks:

(a) The corridor contains piping and cable trays for division 2 safety systems in its upper elevation.

(b) The CUW System is capable of removing a small amount of decay heat from the reactor vessel during certain conditions.

9A.4.1.1.33 Backwash Transfer Pump Room (Rm No. 149)

(1) Fire Area—F1200

(2) Equipment: See Table 9A.6-2

Safety-Related	Provides Core Cooling
No	No

(3) Radioactive Material Present—None that can be released as a result of a fire.

(4) Qualifications of Fire Barriers—Walls and ceiling are concrete. The concrete base mat serves as the floor. The walls common with the HCU unit room (Rm 117) and corridor A (Rm 116) are of 3 h fire-resistive concrete construction as they serve as part of the fire barrier between division 2 fire area F1200 and division 1 fire area F1100. There is one nonrated door to corridor D (Rm No. 142). All personnel entry and egress is by this single path. The room interior is divided into three sections by an internal "T" wall. Two of the sections contain a pump per section. The third section provides a shielded personnel entry way. The vertical height of the room is terminated short of the next main floor by a roof at elevation –4400 mm to form a pipe space. A ladder from the shielded personnel entry way area provides access to the CUW pipe space above. A portion of the CUW pipe space floor over the corridor D (Rm 142) steps down to –3500 mm and the pipe space ceiling is at elevation –1750 mm.

(5) Combustibles Present—No significant quantities of exposed combustibles. 727 MJ/m^2 NCLL (727 MJ/m^2 maximum average) applies.

(6) Detection Provided—Class A supervised POC in the room and manual alarm pull stations at Col. 1.1-A.1 in the corridor.

(7) Suppression Available:

Type	Location/Actuation
Standpipe and hose reel	Col. 1.1-A.1/Manual
ABC hand extinguishers	Col. 1.1-A.1/Manual

(8) Fire Protection Design Criteria Employed:

(a) The function is located in a room separate from the rooms which contain safety-related equipment.

(b) Fire detection and suppression capability is provided and accessible.

(9) Consequences of Fire—The postulated fire assumes the loss of the function. The function is not safety-related, and does not have a core cooling function. Therefore, the loss of the function is acceptable.

Smoke from a fire would be removed by the normal HVAC System operating in its smoke removal mode.

(10) Consequences of Fire Suppression—Suppression extinguishes the fire. Refer to Section 3.4, "Water Level (Flood) Design", for the drain system.

(11) Design Criteria Used for Protection Against Inadvertent Operation, Careless Operation or Rupture of the Suppression System:

(a) Location of the manual suppression system external to the room

(b) Provision of raised supports for the equipment

(c) Refer to Section 3.4, "Water Level (Flood) Design", for the drain system.

(d) ANSI B31.1 standpipe (rupture unlikely)

(12) Fire Containment or Inhibiting Methods Employed:

(a) The functions are located in a separate fire-resistive enclosure.

(b) The means of fire detection, suppression and alarming are provided and accessible.

(13) Remarks—None.

9A.4.1.1.34 CUW Backwash Tank Room (Rm No. 144)

(1) Fire Area—F1200

(2) Equipment: See Table 9A.6-2

Safety-Related	Provides Core Cooling
No	No

(3) Radioactive Material Present—None that can be released as a result of fire.

(4) Qualifications of Fire Barriers—The wall common with the division 4 instrument rack room (Rm 111) is of 3 h fire-resistive concrete construction as the backwash receiving tank room is in division 2 fire area F1200 and the division 4 instrument rack room (Rm 111) is in division 1 fire area F1100. The primary containment serves as a portion of one wall of the room. The remainder of the walls and the ceiling are concrete but are not fire rated. The concrete base mat serves as the floor. Personnel entry and egress and equipment removal are via a non-fire-rated door at elevation –4400 mm. There is a ladder up to the door from the inside of the room. Exterior access to the door is up from quadrant 1 corridor (Rm 116) by ladder to a landing at elevation –4400 mm, thence, across the landing to a shielding door to the backwash valve room (Rm 161). The door to the backwash receiving tank room is within the backwash valve room.

(5) Combustibles Present—No significant quantities of exposed combustibles. 727 MJ/m^2 NCLL (727 MJ/m^2 maximum average) applies.

(6) Detection Provided—Class A supervised POC in the room and manual alarm pull stations at Col. 1.1-A.1 in the corridor.

(7) Suppression Available:

Type	Location/Actuation
Standpipe and hose reel	Col. 1.1-A.1/Manual
ABC hand extinguishers	Col. 1.1-A.1/Manual

(8) Fire Protection Design Criteria Employed:

(a) The function is located in a room separate from the rooms which contain safety-related equipment.

(b) Fire detection and suppression capability is provided and accessible.

(9) Consequences of Fire—The postulated fire assumes the loss of the function. The function is not safety-related, therefore the loss of the function is acceptable.

Smoke from a fire will be removed by the normal HVAC System operating in its smoke removal mode.

(10) Consequences of Fire Suppression—Suppression extinguishes the fire. Refer to Section 3.4, “Water Level (Flood) Design”, for the drain system.

(11) Design Criteria Used for Protection Against Inadvertent Operation, Careless Operation or Rupture of the Suppression System:

(a) Location of the manual suppression system external to the room

(b) Provision of raised supports for the equipment

(c) Refer to Section 3.4, "Water Level (Flood) Design", for the drain system.

(d) ANSI B31.1 standpipe (rupture unlikely)

(12) Fire Containment or Inhibiting Methods Employed:

(a) The functions are located in a separate fire-resistive enclosure.

(b) The means of fire detection, suppression and alarming are provided and accessible.

(13) Remarks—The room is cooled by the Reactor Building HVAC System, which is not redundant or safety grade. A safety-grade system is not required.

9A.4.1.1.35 Not Used

9A.4.1.1.36 Not Used

9A.4.1.1.37 Instrument Rack Room, Division 4 (Rm No. 111)

(1) Fire Area—F1400

(2) Equipment: See Table 9A.6-2

Safety-Related	Provides Core Cooling
Yes, D4	No

(3) Radioactive Material Present—None that can be released as a result of fire.

(4) Qualifications of Fire Barriers—The wall common with CUW back wash tank room (Rm144) is of a three hour fire-resistive concrete construction as it serves as part of the fire barrier between division 2 fire area F1200 and division 1 fire area F1100. The primary containment acts as another wall of the room. All other walls and the ceiling are constructed of concrete, but are not fire rated as they are within fire area F1100. The concrete base mat serves as the floor. There is a nonlabeled door to CRD HCU room (Rm 117). All personnel entry and egress is by this single path. The vertical height of the

room is terminated short of the next main floor by a roof at elevation −5200 mm as a pipe space area. Access to this area is provided via a nonrated fire door from the piping space area over room 118.

(5) Combustibles Present:

Fire Loading	Total Heat of Combustion (MJ)
17 m of divisional cable trays containing 14 kg/m of XLPE-FR cable insulation	727 MJ/m^2, NCLL (727 MJ/m^2 maximum average) applies.

(6) Detection Provided—Class A supervised POC in the room and manual alarm pull stations at Col. 5.8-A.5 in the corridor.

(7) Suppression Available:

Type	Location/Actuation
Standpipe and hose reel	Col. 5.8-A5/Manual
ABC hand extinguishers	Col. 5.8-A5/Manual

(8) Fire Protection Design Criteria Employed:

(a) The function is located in a fire area which is separated from the fire areas containing equipment which provide alternate means of performing the safety or shutdown function.

(b) Fire detection and suppression capability is provided and accessible.

(c) Fire stops are provided for cable tray and piping penetrations through rated fire barriers.

(9) Consequences of Fire—The postulated fire assumes the loss of the function for the equipment in the fire area.

Smoke from a fire will be removed by the normal HVAC System operating in its smoke removal mode.

(10) Consequences of Fire Suppression—Suppression extinguishes the fire. Refer to Section 3.4, “Water Level (Flood) Design”, for the drain system.

(11) Design Criteria Used for Protection Against Inadvertent Operation, Careless Operation or Rupture of the Suppression System:

(a) Location of the manual suppression system external to the room

(b) Refer to Section 3.4, "Water Level (Flood) Design", for the drain system.

(c) ANSI B31.1 standpipe (rupture unlikely)

(12) Fire Containment or Inhibiting Methods Employed:

(a) The functions are located in a separate fire-resistive enclosure.

(b) Fire stops are provided for cable tray and piping penetrations through fire rated barriers.

(c) The means of fire detection, suppression and alarming are provided and accessible.

(13) Remarks—Core Flow Instrument Rack H22-P001D (Div. 4), HCU Scram Solenoids (Div. 2,3) are mounted in this room. Section 9A.5, Special Cases, provides justification for locating equipment from multiple safety divisions in this room.

9A.4.1.1.38 Instrument Rack Room, Division 1 (Rm No. 118)

(1) Fire Area—F1100

(2) Equipment: See Table 9A.6-2

Safety-Related	Provides Core Cooling
Yes, D1	No

(3) Radioactive Material Present—None that can be released as a result of fire.

(4) Qualifications of Fire Barriers—The primary containment acts as one wall of the room. All other walls and the ceiling are constructed of concrete but are not fire rated as they are within fire area F1100. The concrete base mat serves as the floor. There is a nonlabeled door to CRD HCU room (Rm 117). All personnel entry and egress is by this single path. The vertical height of the room is terminated short of the next main floor by a roof at elevation –5200 mm for a pipe space area. Access to this area is provided via a ladder through an open hatch within the room. A nonrated door provides access from the pipe space area to the adjacent pipe space area (Rm 111).

(5) Combustibles Present: Combustion (Btu)

Fire Loading	Total Heat of Combustion (MJ)
Divisional cable trays containing 14 kg/m of XLPE-FR cable insulation	727 MJ/m^2, NCLL (727 MJ/m^2 maximum average) applies.

(6) Detection Provided—Class A supervised POC in the room and manual alarm pull stations at Col. 5.8-A.5 in the corridor.

(7) Suppression Available:

Type	Location/Actuation
Standpipe and hose reel	Col. 5.8-A.5/Manual
ABC hand extinguishers	Col. 5.8-A.5/Manual

(8) Fire Protection Design Criteria Employed:

(a) The function is located in a fire area which is separated from the fire areas containing equipment which provide alternate means of performing the safety or shutdown function.

(b) Fire detection and suppression capability is provided and accessible.

(c) Fire stops are provided for cable tray and piping penetrations through rated fire barriers.

(9) Consequences of Fire—The postulated fire assumes the loss of the function for equipment in the fire area.

Smoke from a fire will be removed by the normal HVAC System operating in its smoke removal mode.

(10) Consequences of Fire Suppression—Suppression extinguishes the fire. Refer to Section 3.4, “Water Level (Flood) Design”, for the drain system.

(11) Design Criteria Used for Protection Against Inadvertent Operation, Careless Operation or Rupture of the Suppression System:

(a) Location of the manual suppression system external to the room

(b) Refer to Section 3.4, “Water Level (Flood) Design”, for the drain system.

(c) ANSI B31.1 standpipe (rupture unlikely)

(12) Fire Containment or Inhibiting Methods Employed:

(a) The functions are located in a separate fire-resistive enclosure.

(b) Fire stops are provided for cable tray and piping penetrations through fire rated barriers.

(c) The means of fire detection, suppression and alarming are provided and accessible.

(13) Remarks—Core Flow Instrument Rack H22-P001D (Div. 4), HCU Scram Solenoids (Div. 2,3) are mounted in this room. Subsection 9A.5, Special Cases, provides justification for locating equipment from multiple safety divisions in this room.

9A.4.1.1.39 Division II Instrument Rack Room (Rm No. 125)

(1) Fire Area—F1200

(2) Equipment: See Table 9A.6-2

Safety-Related	Provides Core Cooling
Yes, D2	Yes

(3) Radioactive Material Present—None that can be released as a result of fire.

(4) Qualifications of Fire Barriers—The Primary containment acts as one wall. The room is completely within fire area F1200, consequently, the floor, and walls are not required to have a fire rating. They are all of concrete construction, however. The concrete base mat serves as the floor. There is a nonlabeled door to the CRD HCU II/III Room (Rm 126). One fourth of the CRD HCU hydraulic lines pass through the upper part of the room. The ceiling is a 3 h barrier.

(5) Combustibles Present:

Fire Loading	Total Heat of Combustion (MJ)
None	727 MJ/m^2 NCLL (727 MJ/m^2 maximum average) applies.

(6) Detection Provided—Class A supervised POC in the room and manual alarm pull stations at Col. 2.5-F.8 in the corridor.

(7) Suppression Available:

Type	Location/Actuation
Standpipe and hose reel	Col. 2.5-F.8/Manual
ABC hand extinguishers	Col. 2.5-F.8/Manual

(8) Fire Protection Design Criteria Employed:

(a) The function is located in a fire area which is separate from the fire areas containing equipment which provide alternate means of performing the safety or shutdown function.

(b) Fire detection and suppression capability is provided and accessible.

(9) Consequences of Fire—The postulated fire assumes the loss of the function for the equipment in the fire area. The scram function is fail safe and would therefore scram as a result of a fire.

Smoke from a fire will be removed by the normal HVAC System operating in its smoke removal mode.

(10) Consequences of Fire Suppression—Suppression extinguishes the fire.Refer to Section 3.4, “Water Level (Flood) Design”, for the drain system.

(11) Design Criteria Used for Protection Against Inadvertent Operation, Careless Operation or Rupture of the Suppression System:

(a) Location of the manual suppression system external to the room

(b) Provision of raised supports for the equipment

(c) Refer to Section 3.4, “Water Level (Flood) Design”, for the drain system.

(d) ANSI B31.1 standpipe (rupture unlikely)

(e) The safety-related function has a remote backup system and is fail safe

(12) Fire Containment or Inhibiting Methods Employed:

(a) The functions are located in a separate fire-resistive enclosure.

(b) The means of fire detection, suppression and alarming are provided and accessible.

(13) Remarks:

(a) The hydraulic control lines from the scram bank are routed up to elevation 4000 where they enter containment through the top of the personnel lock.

(b) Pressure transmitters C12-PT011C are mounted in this room. Section 9A.5, Special Cases, provides justification for locating equipment from multiple safety divisions in this room.

9A.4.1.1.40 Division III Instrument Rack Room (Rm No. 129)

(1) Fire Area—F1200

(2) Equipment: See Table 9A.6-2

Safety-Related	Provides Core Cooling
Yes, D1, D2, D3	Yes

(3) Radioactive Material Present—None that can be released as a result of fire.

(4) Qualifications of Fire Barriers—A portion of one wall is common with the RHR C pump room (Rm 132) and the ceiling are of 3 h fire resistive concrete construction. The remainder of the room is completely within fire area F1200, consequently, the floor, and walls are not required to have a fire rating. They are all of concrete construction, however. The concrete base mat serves as the floor. There is a nonlabeled door to the CRD HCU (II/III HCU) room (Rm 126). One fourth of the CRD hydraulic lines pass through the upper area of the room.

(5) Combustibles Present:

Fire Loading	Total Heat of Combustion (MJ)
None	727 MJ/m^2 NCLL (727 MJ/m^2 maximum average) applies.

(6) Detection Provided—Class A supervised POC in the room and manual alarm pull stations at Col. 5.9-F.8 in the corridor.

(7) Suppression Available:

Type	Location/Actuation
Standpipe and hose reel	Col. 5.9-F.8/Manual
ABC hand extinguishers	Col. 5.9-F.8/Manual

(8) Fire Protection Design Criteria Employed:

(a) The function is located in a fire area which is separate from the fire areas containing equipment which provide alternate means of performing the safety or shutdown function.

(b) Fire detection and suppression capability is provided and accessible.

(9) Consequences of Fire—The postulated fire assumes the loss of the function for the equipment in the fire area. The scram function is fail safe and would therefore scram as a result of a fire.

Smoke from a fire will be removed by the normal HVAC System operating in its smoke removal mode.

(10) Consequences of Fire Suppression—Suppression extinguishes the fire.Refer to Section 3.4, “Water Level (Flood) Design”, for the drain system.

(11) Design Criteria Used for Protection Against Inadvertent Operation, Careless Operation or Rupture of the Suppression System:

(a) Location of the manual suppression system external to the room

(b) Provision of raised supports for the equipment

(c) Refer to Section 3.4, “Water Level (Flood) Design”, for the drain system.

(d) ANSI B31.1 standpipe (rupture unlikely)

(e) The safety-related function has a remote backup system and is fail safe

(12) Fire Containment or Inhibiting Methods Employed:

(a) The functions are located in a separate fire-resistive enclosure.

(b) The means of fire detection, suppression and alarming are provided and accessible.

(13) Remarks:

(a) The hydraulic control lines from the scram bank are routed up to elevation 4000 where they enter containment through the top of the personnel lock.

(b) Pressure transmitter C12-PT011C is mounted in this room. Section 9A.5, Special Cases, provides justification for locating equipment from multiple safety divisions in this room.

9A.4.1.1.41 CUW Valve and Pipe Space (Rm No. 143)

(1) Fire Area—F1200

(2) Equipment: See Table 9A.6-2

Safety-Related	Provides Core Cooling
No	Yes

(3) Radioactive Material Present—None that can be released as a result of fire.

(4) Qualifications of Fire Barriers—The walls and ceiling are concrete and are not fire rated. The concrete floor serves as the ceiling to portions of corridor D (Rm 142) and the SPCU pump room (Rm 140) below. Access to the valve room is provided by an open door way from a landing at elevation –5300 mm. A corridor from the landing provides access to the backwash receiving tank room (Rm 144).

(5) Combustibles Present—No significant quantities of exposed combustibles. 727 MJ/m^2 NCLL (727 MJ/m^2 maximum average) applies.

(6) Detection Provided—Class A supervised POC in the room and manual alarm pull stations at Col. 1.1-A.1 in the corridor.

(7) Suppression Available:

Type	Location/Actuation
Standpipe and hose reel	Col. 1.1-A.1/Manual
ABC hand extinguishers	Col. 1.1-A.1/Manual

(8) Fire Protection Design Criteria Employed:

(a) The function is located in a room separate from the rooms which contain safety-related equipment.

(b) Fire detection and suppression capability is provided and accessible.

(9) Consequences of Fire—The postulated fire assumes the loss of the function. The function is not safety-related, therefore the loss of the function is acceptable.

Smoke from a fire will be removed by the normal HVAC System operating in its smoke removal mode.

(10) Consequences of Fire Suppression—Suppression extinguishes the fire. Refer to Section 3.4, "Water Level (Flood) Design", for the drain system.

(11) Design Criteria Used for Protection Against Inadvertent Operation, Careless Operation or Rupture of the Suppression System:

(a) Location of the manual suppression system external to the room

(b) Provision of raised supports for the equipment

(c) Refer to Section 3.4, "Water Level (Flood) Design", for the drain system.

(d) ANSI B31.1 standpipe (rupture unlikely)

(12) Fire Containment or Inhibiting Methods Employed:

(a) The functions are located in a separate fire-resistive enclosure.

(b) The means of fire detection, suppression and alarming are provided and accessible.

(13) Remarks—The room is cooled by the Reactor Building HVAC System, which is not redundant or safety grade. A safety-grade system is not required.

9A.4.1.2 Building—Reactor Bldg El –1700 mm

9A.4.1.2.1 Lower Drywell (Rm No. 291)

(1) Fire Area—F1901

(2) Equipment: See Table 9A.6-2 for this elevation. Devices within the lower drywell are also listed at floor elevations –8200 mm and 4800 mm, as appropriate.

Note: Section 9A.4.1.01 applies for the remainder of the information for the drywell. See that section for additional information.

9A.4.1.2.2 Wetwell (Rm No. 290)

(1) Fire Area—F9001

(2) Equipment: See Table 9A.6-2

Note: Section 9A.4.1.02 applies for the remainder of the information for the wetwell. See that section for additional information.

9A.4.1.2.3 Corridor A (Rm No. 210)

(1) Fire Area—F1100

(2) Equipment: See Table 9A.6-2

Safety-related	Provides Core Cooling
Yes, D1,D2 & D4	Yes, D1, D2,& D4

(3) Radioactive Material Present—None that can be released as a result of fire.

(4) Qualifications of Fire Barriers—The corridor is a large room which extends from the firewall at column 3.0, row A.0-A.3, to corridor C (Rm 231) at row D.0, column 6.0-7.0. It is within fire area F1100. The purpose of this room is to provide an un-obstructed maintenance area for the equipment from the pump rooms below.

The walls of the stair and elevator towers (Rms 191 and 292), the common walls with corridor D (Rm 244) maintenance area C (Rm 231), and the building exterior walls serve as fire barriers. All fire barriers have a fire resistive rating of three hours. A portion of the ceiling of corridor A (col. 3.0-4.6) is at elevation 1500 mm. The remainder of the ceiling of corridors A, the RCW pipe space area next to stairwell No.1, and the RHR maintenance A are at elevation 4750 mm. The ceiling over the RCW P.S., the corridor A, and a portion of the RHR maintenance A area are fire barriers. These fire barriers are of 3 h fire-resistive concrete construction as these rooms are in fire area F1100 and the Emergency Electrical Room A (Rm310), the RIP panel room (Rm 315), stairwell (Rm 316), and elevator (Rm 317) are in fire area F3100, F3300, F3311, and F3310, respectively. Portion of the floor of corridor C is fire barrier and is of 3 h fire-resistive concrete construction as the corridor C is fire area F1100 and the area below the RCW pipe space is fire area F1300. The remaining walls, ceiling, and floor are concrete construction but are not fire rated as they are internal to fire area F1100. Three hour fire-resistive doors provide access to stairwell No.1, and to D corridor. A 3 h fire-resistive rollup

door provides entry, to the lower drywell entry, to the pipe chase rooms, and to corridor C. The containment serves as one wall for the room.

(5) Combustibles Present:

Fire Loading	Total Heat of Combustion (MJ)
Divisional cable trays containing 14 kg/m of XLPE-FR cable insulation	727 MJ/m^2, NCLL (727 MJ/m^2 maximum average) applies.

(6) Detection Provided—Class A supervised POC in the room and manual alarm pull station at Col. 6.1-B.1

(7) Suppression Available:

Type	Location/Actuation
Standpipe and hose reel	Col. 6.1-B.1. & 6.9-D.3/Manual
ABC hand extinguishers	Col. 6.1-B.1/Manual

(8) Fire Protection Design Criteria Employed:

(a) The function is located in a fire area which is separate from the fire areas containing equipment which provide alternate means of performing the safety or shutdown function.

(b) Fire detection and suppression capability is provided and accessible.

(c) Fire stops are provided for cable tray and piping penetrations through rated fire barriers.

(9) Consequences of Fire—The postulated fire assumes the loss of the function. The provisions for core cooling systems backup are defined in Subsection 9A.2.5.

(10) Consequences of Fire Suppression—Suppression extinguishes the fire. Refer to Section 3.4, “Water Level (Flood) Design”, for the drain system.

(11) Design Criteria Used for Protection Against Inadvertent Operation, Careless Operation or Rupture of the Suppression System:

(a) Location of the manual suppression system internal to the room

(b) Provision of raised supports for the equipment

(c) Refer to Section 3.4, "Water Level (Flood) Design", for the drain system.

(d) ANSI B31.1 standpipe (rupture unlikely)

(12) Fire Containment or Inhibiting Methods Employed:

(a) The functions are located in a separate fire-resistive enclosure.

(b) Fire stops are provided for cable tray and piping penetrations through fire rated barriers.

(c) The means of fire detection, suppression and alarming are provided and accessible.

(13) Remarks—The corridor contains piping and cable trays in its upper elevation.

9A.4.1.2.4 RHR (A)/RCIC Pipe Space (Rm No. 212)

(1) Fire Area—F1100

(2) Equipment: See Table 9A.6-2

Safety--Related	Provides Core Cooling
Yes, D1	Yes, D1

(3) Radioactive Material Present—None that can be released as a result of fire.

(4) Qualifications of Fire Barriers—The room is within division 1 fire area F1100. The wall common with pipe space C (Rm 230) serves as a fire barrier and is of 3 h fire-resistive concrete construction. The ceiling and floor are concrete but are not fire rated as they are internal to fire area F1100. The containment serves as one wall of the room. Access and egress from the room is provided through a nonrated shield door to the division 1 corridor (Rm 210).

(5) Combustibles Present:

Fire Loading	Total Heat of Combustion (MJ)
None	727 MJ/m^2 NCLL (727 MJ/m^2 maximum average) applies.

(6) Detection Provided—Class A supervised POC in the room and manual alarm pull station at Col. 6.1-B.1 and 6.9-D.3.

(7) Suppression Available:

Type	Location/Actuation
Standpipe and hose reel	Col. 6.1-B.1 & 6.9-D.3/Manual
ABC hand extinguishers	Col. 6.1-B.1 & 6.9-D.3/Manual

(8) Fire Protection Design Criteria Employed:

(a) The function is located in a separate fire-resistive enclosure.

(b) Fire detection and suppression capability is provided and accessible.

(c) Fire stops are provided for cable tray and piping penetrations through rated fire barriers.

(9) Consequences of Fire—The postulated fire assumes the loss of the function. The provisions for core cooling systems backup are defined in Subsection 9A.2.5.

(10) Consequences of Fire Suppression—Suppression extinguishes the fire. Refer to Section 3.4, “Water Level (Flood) Design”, for the drain system.

(11) Design Criteria Used for Protection Against Inadvertent Operation, Careless Operation or Rupture of the Suppression System:

(a) Location of the manual suppression system external to the room

(b) Provision of raised supports for the equipment

(c) Refer to Section 3.4, “Water Level (Flood) Design”, for the drain system.

(d) ANSI B31.1 standpipe (rupture unlikely)

(12) Fire Containment or Inhibiting Methods Employed:

(a) The functions are located in a separate fire-resistive enclosure.

(b) The means of fire detection, suppression and alarming are provided and accessible.

(c) Fire stops are provided for cable tray and piping penetrations through rated fire barriers.

(13) Remarks—None

9A.4.1.2.5 Lower Drywell Personnel Access (Rm No. 211)

(1) Fire Area—F1100

(2) Equipment: See Table 9A.6-2

Safety-Related	Provides Core Cooling
No	No

(3) Radioactive Material Present—None that can be released as a result of fire.

(4) Qualifications of Fire Barriers—The walls of the room are of non rated concrete construction as the room is completely within fire area F1100. A non rated door provides access from Corridor A. The floor is concrete and is not fire-rated as it is internal to fire area F1100. The personnel hatch for the lower cavity is contained in the room. A portion of the floor drops down to elevation –2580 mm to form a pit for the lower portion of the cylindrical drywell hatch. The space between the hatch and the floor of the room is closed with checker plate. Open pipe chases for the control rod hydraulic lines enter the room from the floor below. The group 1 and 4 hydraulic control unit lines pass through this room to enter containment via the upper area of the personnel lock. The containment serves as one wall for the room. A portion of the ceiling is comprised of the steel plate portion of the floor for the TIP penetration room (Rm 216), above.

(5) Combustibles Present:

Fire Loading	Total Heat of Combustion (MJ)
None	727 MJ/m^2 NCLL (727 MJ/m^2 maximum average) applies.

(6) Detection Provided—Class A supervised POC in the room and manual alarm pull station at Col. 4.2-A.9.

(7) Suppression Available:

Type	Location/Actuation
Standpipe and hose reel	Col. 4.2-A.9 & 6.1-B.1/Manual
ABC hand extinguishers	Col. 4.2-A.9 & 6.1-B.1/Manual

(8) Fire Protection Design Criteria Employed:

(a) The function is located in a fire area which is separate from the fire areas containing equipment which provide alternate means of performing the function.

(b) Fire detection and suppression capability is provided and accessible.

(c) Fire stops are provided for cable tray and piping penetrations through rated fire barriers.

(9) Consequences of Fire—The postulated fire assumes the loss of the function. Alternate entry to the lower cavity is provided by the material access lock located directly across the containment.

(10) Consequences of Fire Suppression—Suppression extinguishes the fire. Refer to Section 3.4, "Water Level (Flood) Design", for the drain system.

(11) Design Criteria Used for Protection Against Inadvertent Operation, Careless Operation or Rupture of the Suppression System:

(a) Location of the manual suppression system external to the room

(b) Provision of raised supports for the equipment

(c) Refer to Section 3.4, "Water Level (Flood) Design", for the drain system.

(d) ANSI B31.1 standpipe (rupture unlikely)

(12) Fire Containment or Inhibiting Methods Employed:

(a) The functions are located in a separate fire-resistive enclosure.

(b) Fire stops are provided for cable tray and piping penetrations through fire rated barriers.

(c) The means of fire detection, suppression and alarming are provided and accessible.

(13) Remarks—The room contains cable in conduit only.

9A.4.1.2.6 HCU Pipe Space A (Rm No. 213)

(1) Fire Area—F1100

(2) Equipment: See Table 9A.6-2

Safety-Related	Provides Core Cooling
Yes, N/A*	No

* See paragraph (13)

(3) Radioactive Material Present—None that can be released as a result of fire.

(4) Qualifications of Fire Barriers—The containment serves as one wall of the room. The remainder of the walls, ceiling, and floor of the room are of non rated concrete construction as the room is completely within fire area F1100. Access to this room is from room 218. Open pipe chases for the control rod hydraulic lines enter the room from the floor and pass through this room to enter containment via the upper area of the personnel lock. A metal grating installed at elevation 1500 mm provides access to the upper portion of the room, and is accessed by a ladder within the room.

(5) Combustibles Present:

Fire Loading	Total Heat of Combustion (MJ)
None	727 MJ/m^2 NCLL (727 MJ/m^2 maximum average) applies.

(6) Detection Provided—Class A supervised POC in the room and manual alarm pull station at Col. 3.6-A.6.

(7) Suppression Available:

Type	Location/Actuation
Standpipe and hose reel	Col. 3.6-A.6/Manual
ABC hand extinguishers	Col. 3.6-A.6/Manual

(8) Fire Protection Design Criteria Employed:

(a) The function is located in a fire area which is separate from the fire areas containing equipment which provide alternate means of performing the safety or shutdown function.

(b) Fire detection and suppression capability is provided and accessible.

(c) Fire stops are provided for cable tray and piping penetrations through rated fire barriers.

(9) Consequences of Fire—A fire could initiate a scram but could not prevent one.

(10) Consequences of Fire Suppression—Suppression extinguishes the fire.Refer to Section 3.4, “Water Level (Flood) Design”, for the drain system.

(11) Design Criteria Used for Protection Against Inadvertent Operation, Careless Operation or Rupture of the Suppression System:

(a) Location of the manual suppression system external to the room

(b) Provision of raised supports for the equipment

(c) Refer to Section 3.4, “Water Level (Flood) Design”, for the drain system.

(d) ANSI B31.1 standpipe (rupture unlikely)

(12) Fire Containment or Inhibiting Methods Employed:

(a) The functions are located in a separate fire-resistive enclosure.

(b) Fire stops are provided for cable tray and piping penetrations through fire rated barriers.

(c) The means of fire detection, suppression and alarming are provided and accessible.

(13) Remarks—The HCU piping is routed through this room to the primary containment via the upper portion of the personnel lock.

9A.4.1.2.7 HCU Pipe Space D (Rm No. 214)

(1) Fire Area—F1100

(2) Equipment: See Table 9A.6-2

Safety-Related	Provides Core Cooling
Yes, D2*	No

* See paragraph (13)

(3) Radioactive Material Present—None that can be released as a result of fire.

(4) Qualifications of Fire Barriers—The containment serves as one wall of the room. The wall common with CUW valve room (RM 243) is of 3 h fire-resistive concrete construction as it serves as part of the fire barrier between division 2 fire area F1200 and division 1 fire area 1100. The remaining walls, ceiling, and floor of the room are concrete but are not fire rated as they are internal to fire area F1100. Access to this room is from room 251. Open pipe chases for the control rod hydraulic lines enter the room from the floor and pass through this room to enter containment via the upper area of the personnel lock. A metal grating installed at elevation 1500 mm provides access to the upper portion of the room, and is accessed by a ladder within the room.

(5) Combustibles Present:

Fire Loading	Total Heat of Combustion (MJ)
None	727 MJ/m^2 NCLL (727 MJ/m^2 maximum average) applies.

(6) Detection Provided—Class A supervised POC in the room and manual alarm pull station at Col. 3.6-A.6.

(7) Suppression Available:

Type	Location/Actuation
Standpipe and hose reel	Col. 3.6-A.6/Manual
ABC hand extinguishers	Col. 3.6-A.6/Manual

(8) Fire Protection Design Criteria Employed:

(a) The function is located in a fire area which is separate from the fire areas containing equipment which provide alternate means of performing the safety or shutdown function.

(b) Fire detection and suppression capability is provided and accessible.

(c) Fire stops are provided for cable tray and piping penetrations through rated fire barriers.

(9) Consequences of Fire—A fire could initiate a scram but could not prevent one.

(10) Consequences of Fire Suppression—Suppression extinguishes the fire. Refer to Section 3.4, "Water Level (Flood) Design", for the drain system.

(11) Design Criteria Used for Protection Against Inadvertent Operation, Careless Operation or Rupture of the Suppression System:

(a) Location of the manual suppression system external to the room

(b) Provision of raised supports for the equipment

(c) Refer to Section 3.4, "Water Level (Flood) Design", for the drain system.

(d) ANSI B31.1 standpipe (rupture unlikely)

(12) Fire Containment or Inhibiting Methods Employed:

(a) The functions are located in a separate fire-resistive enclosure.

(b) Fire stops are provided for cable tray and piping penetrations through fire rated barriers.

(c) The means of fire detection, suppression and alarming are provided and accessible.

(13) Remarks—The HCU piping is routed through this room to the primary containment via the upper portion of the personnel lock.

MO valve of SPCU system G51-F006 is mounted in this room. Section 9A.5 Special Cases provides justification for locating equipment from a different safety division in this room.

9A.4.1.2.8 TIP Room (Rm No. 215)

(1) Fire Area—F1100

(2) Equipment: See Table 9A.6-2

Safety-Related	Provides Core Cooling
No	No

(3) Radioactive Material Present—None that can be released as a result of fire.

(4) Qualifications of Fire Barriers—With the exception of the exterior wall, the walls and the floor are concrete and are not fire-rated as the room is internal to fire area F1100. The ceiling is a fire barrier and is of 3 h fire resistive

concrete construction as the TIP room is in fire area F1100 and the MCC division 1 above is in fire area F3100. A non rated door provides access from the TIP area landing (Rm 218).

(5) Combustibles Present:

Fire Loading	Total Heat of Combustion (MJ)
None	727 MJ/m^2 NCLL (727 MJ/m^2 maximum average) applies.

(6) Detection Provided—Class A supervised POC in the room and manual alarm pull station at Col. 5.5-A.9.

(7) Suppression Available:

Type	Location/Actuation
Standpipe and hose reel	Col. 5.5-A.9 & 6.1-B.1 at –1700 mm/Manual
ABC hand extinguishers	Col. 5.8-A.9 & 6.1-B.1 at –1700 mm/Manual

(8) Fire Protection Design Criteria Employed:

(a) The function is not safety-related and its loss as result of a fire is acceptable.

(b) Fire detection and suppression capability is provided and accessible.

(c) Fire stops are provided for cable tray and piping penetrations through rated fire barriers.

(9) Consequences of Fire—The postulated fire assumes the loss of the function.

(10) Consequences of Fire Suppression—Suppression extinguishes the fire.Refer to Section 3.4, “Water Level (Flood) Design”, for the drain system.

(11) Design Criteria Used for Protection Against Inadvertent Operation, Careless Operation or Rupture of the Suppression System:

(a) Location of the manual suppression system external to the room

(b) Provision of raised supports for the equipment

(c) Refer to Section 3.4, "Water Level (Flood) Design", for the drain system.

(d) ANSI B31.1 standpipe (rupture unlikely)

(12) Fire Containment or Inhibiting Methods Employed:

(a) The functions are located in a separate fire-resistive enclosure.

(b) Fire stops are provided for cable tray and piping penetrations through fire rated barriers.

(c) The means of fire detection, suppression and alarming are provided and accessible.

(13) Remarks—The room contains cable in conduit only.

9A.4.1.2.9 TIP Shield Room (Rm No. 216)

(1) Fire Area—F1100

(2) Equipment: See Table 9A.6-2

Safety-Related	Provides Core Cooling
No	No

(3) Radioactive Material Present—None that can be released as a result of fire.

(4) Qualifications of Fire Barriers—The walls and the floor are concrete and are not fire-rated as they are internal to fire area F1100. The room is divided into two sections by a shielding wall with an open doorway between the two sections of the room. The floor of the section adjacent to containment is comprised of steel plate. The containment serves as one wall of the room. The portion of the ceiling common with the electrical equipment room (Rm 310) above is a fire barrier and is of 3 h fire resistive concrete construction as the TIP shield room is in fire area F1100 and the electrical equipment room is in fire area F3100. Access to the room is through an open doorway from room 211 via a non rated door to the tip area landing (Rm 218) at elevation 1500 mm.

(5) Combustibles Present:

Fire Loading	Total Heat of Combustion (MJ)
None	727 MJ/m^2 NCLL (727 MJ/m^2 maximum average) applies.

(6) Detection Provided—Class A supervised POC in the room and manual alarm pull station at Col. 5.5-A.9.

(7) Suppression Available:

Type	Location/Actuation
Standpipe and hose reel	Col. 5.5-A.9 & 6.1-B.1 at –1700 mm/Manual
ABC hand extinguishers	Col. 5.8-A.9 & 6.1-B.1 at –1700 mm/Manual

(8) Fire Protection Design Criteria Employed:

(a) The function is not safety-related and its loss as a result of fire is acceptable.

(b) Fire detection and suppression capability is provided and accessible.

(c) Fire stops are provided for cable tray and piping penetrations through rated fire barriers.

(9) Consequences of Fire—The postulated fire assumes the loss of the function.

(10) Consequences of Fire Suppression—Suppression extinguishes the fire. Refer to Section 3.4, “Water Level (Flood) Design”, for the drain system.

(11) Design Criteria Used for Protection Against Inadvertent Operation, Careless Operation or Rupture of the Suppression System:

(a) Location of the manual suppression system external to the room

(b) Provision of raised supports for the equipment

(c) Refer to Section 3.4, “Water Level (Flood) Design”, for the drain system.

(d) ANSI B31.1 standpipe (rupture unlikely)

(12) Fire Containment or Inhibiting Methods Employed:

(a) The functions are located in a separate fire-resistive enclosure.

(b) Fire stops are provided for cable tray and piping penetrations through fire rated barriers.

(c) The means of fire detection, suppression and alarming are provided and accessible.

(13) Remarks—The room contains cable in conduit only.

9A.4.1.2.10 SPCU Pipe Space (Rm No. 217)

(1) Fire Area—F1100

(2) Equipment: See Table 9A.6-2

Safety-Related	Provides Core Cooling
No	No

(3) Radioactive Material Present—None that can be released as a result of fire.

(4) Qualifications of Fire Barriers—The room is within division 1 fire area F1100. The wall common with the adjacent FPC F/D valve room (Rm 248), CUW rooms (Rms 242, 244 and 249) and the building exterior wall, and portion of the ceiling common with the Emergency Electrical Room A (Rm 310) serve as fire barriers and are of 3 h fire-resistive concrete construction. The remainder of the walls, the remainder of ceiling and the floor are concrete but are not fire rated as they are internal to fire area F1100. Access to the room is through a non rated door from the TIP drive room (Rm 215). Access to the room is through a nonrated door from the TIP drive room (Rm 215).

(5) Combustibles Present:

Fire Loading	Total Heat of Combustion (MJ)
None	727 MJ/m^2 NCLL (727 MJ/m^2 maximum average) applies.

(6) Detection Provided—Class A supervised POC in the room and manual alarm pull station at Col. 5.5-A.9 and 6.1-B.1 at –1700.

(7) Suppression Available:

Type	Location/Actuation
Standpipe and hose reel	Col. 5.5-A.9 & 6.1-B.1 at –1700 mm/Manual
ABC hand extinguishers	Col. 5.5-A.9 & 6.1-B.1 at –1700 mm/Manual

(8) Fire Protection Design Criteria Employed:

(a) The function is located in a separate fire-resistive enclosure.

(b) Fire detection and suppression capability is provided and accessible.

(c) Fire stops are provided for cable tray and piping penetrations through rated fire barriers.

(9) Consequences of Fire—The postulated fire assumes the loss of the function. The provisions for core cooling systems backup are defined in Subsection 9A.2.5.

(10) Consequences of Fire Suppression—Suppression extinguishes the fire. Refer to Section 3.4, "Water Level (Flood) Design", for the drain system.

(11) Design Criteria Used for Protection Against Inadvertent Operation, Careless Operation or Rupture of the Suppression System:

(a) Location of the manual suppression system external to the room

(b) Provision of raised supports for the equipment

(c) Refer to Section 3.4, "Water Level (Flood) Design", for the drain system.

(d) ANSI B31.1 standpipe (rupture unlikely)

(12) Fire Containment or Inhibiting Methods Employed:

(a) The functions are located in a separate fire-resistive enclosure.

(b) The means of fire detection, suppression and alarming are provided and accessible.

(c) Fire stops are provided for cable tray and piping penetrations through rated fire barriers.

(13) Remarks—None

9A.4.1.2.11 TIP Area Landing (Rm No. 218)

(1) Fire Area—F1100

(2) Equipment: See Table 9A.6-2

Safety-Related	Provides Core Cooling
No	No

(3) Radioactive Material Present—None that can be released as a result of fire.

(4) Qualifications of Fire Barriers—The room is within division 1 fire area F1100. The walls common with the elevator and stair tower and the portion of ceiling common with the division 1 electrical equipment room (Rm 310) are fire barriers and are of 3 h fire-resistive concrete construction. The remainder of the walls, and ceiling and the floor are concrete but are not fire rated as they are internal to fire area F1100. The room provides access from the stairs and elevator to the TIP rooms via a non rated door.

(5) Combustibles Present:

Fire Loading	Total Heat of Combustion (MJ)
None	727 MJ/m^2 NCLL (727 MJ/m^2 maximum average) applies.

(6) Detection Provided—Class A supervised POC in the room and manual alarm pull station at Col. 5.5-A.9 and 6.1-B.1 at –1700 mm.

(7) Suppression Available:

Type	Location/Actuation
Standpipe and hose reel	Col. 5.5-A.9 & 6.1-B.1 at –1700 mm/Manual
ABC hand extinguishers	Col. 5.5-A.9 & 6.1-B.1 at –1700 mm/Manual

(8) Fire Protection Design Criteria Employed:

(a) The function is located in a separate fire-resistive enclosure.

(b) Fire detection and suppression capability is provided and accessible.

(c) Fire stops are provided for cable tray and piping penetrations through rated fire barriers.

(9) Consequences of Fire—The postulated fire assumes the loss of the function. The function is not safety-related and its temporary loss is acceptable.

(10) Consequences of Fire Suppression—Suppression extinguishes the fire. Refer to Section 3.4, “Water Level (Flood) Design”, for the drain system.

(11) Design Criteria Used for Protection Against Inadvertent Operation, Careless Operation or Rupture of the Suppression System:

(a) Location of the manual suppression system internal to the room

(b) Provision of raised supports for the equipment

(c) Refer to Section 3.4, "Water Level (Flood) Design", for the drain system.

(d) ANSI B31.1 standpipe (rupture unlikely)

(12) Fire Containment or Inhibiting Methods Employed:

(a) The functions are located in a separate fire-resistive enclosure.

(b) The means of fire detection, suppression and alarming are provided and accessible.

(c) Fire stops are provided for cable tray and piping penetrations through rated fire barriers.

(13) Remarks—None

9A.4.1.2.12 HPCF (C)/RHR (C) Pipe Space (Rm No. 230)

(1) Fire Area—F1300

(2) Equipment: See Table 9A.6-2

Safety-Related	Provides Core Cooling
Yes, D3	Yes, D3

(3) Radioactive Material Present—None that can be released as a result of fire.

(4) Qualifications of Fire Barriers—The wall common with the HPCF (A)/RHR (A) pipe space (Rm 212) and the portion of the floor common with the RCIC room (Rm 112) below are of 3 h fire-resistive concrete construction. The containment serves as one wall of the room. The remainder of the walls and floor, and the ceiling are concrete but are not fire rated as they are internal to fire area F1300. A non rated shield door provides access to the room from the adjacent maintenance area C (Rm No. 231).

(5) Combustibles Present:

Fire Loading	Total Heat of Combustion (MJ)
None	727 MJ/m^2 NCLL (727 MJ/m^2 maximum average) applies.

(6) Detection Provided—Class A supervised POC in the room and manual alarm pull station at Col. 6.9-D.3.

(7) Suppression Available:

Type	Location/Actuation
Standpipe and hose reel	Col. 6.9-D.3 & 6.1-E8/Manual
ABC hand extinguishers	Col. 6.9-D.3 & 6.1-E8/Manual

(8) Fire Protection Design Criteria Employed:

(a) The function is located in a separate fire-resistive enclosure.

(b) Fire detection and suppression capability is provided and accessible.

(9) Consequences of Fire—The postulated fire assumes the loss of the function. The provisions for core cooling systems backup are defined in Subsection 9A.2.5.

(10) Consequences of Fire Suppression—Suppression extinguishes the fire. Refer to Section 3.4, “Water Level (Flood) Design”, for the drain system.

(11) Design Criteria Used for Protection Against Inadvertent Operation, Careless Operation or Rupture of the Suppression System:

(a) Location of the manual suppression system external to the room

(b) Provision of raised supports for the equipment

(c) Refer to Section 3.4, “Water Level (Flood) Design”, for the drain system.

(d) ANSI B31.1 standpipe (rupture unlikely)

(12) Fire Containment or Inhibiting Methods Employed:

(a) The functions are located in a separate fire-resistive enclosure.

(b) The means of fire detection, suppression and alarming are provided and accessible.

(13) Remarks—The room contains cable in conduit only.

9A.4.1.2.13 Maintenance Area C (Rm No. 231)

(1) Fire Area—F1300

(2) Equipment: See Table 9A.6-2

Safety-Related	Provides Core Cooling
Yes, D2 & D3	Yes

(3) Radioactive Material Present—None that can be released as a result of fire.

(4) Qualifications of Fire Barriers—The wall common with corridor A (Rm 210) the FMCRD/RIP maintenance room (Rm 225), the exterior wall and a portion of the floor common with the RCIC room (Rm 112) below are of 3 h fire-resistive concrete construction. The remainder of the walls and floor and the ceiling are of non rated concrete construction. The purpose of this room is to provide an un-obstructed maintenance area for the equipment from the pump rooms below. Three hour fire rated doors provide access to the FMCRD/RIP maintenance room (Rm 225). Portions of the walls are formed by the primary containment. Three hour fire rated rollup doors provide equipment removal access between maintenance areas A and B. There are three floor hatches for removal of equipment from the rooms on the floor below.

(5) Combustibles Present:

Fire Loading	Total Heat of Combustion (MJ)
Divisional cable trays containing 14 kg/m of XLPE-FR cable insulation	727 MJ/m^2, NCLL (727 MJ/m^2 maximum average) applies.

(6) Detection Provided—Class A supervised POC in the room and manual alarm pull station at Col. 6.9-D.3. and 6.1-E.8.

(7) Suppression Available:

Type	Location/Actuation
Standpipe and hose reel	Col. 6.9-D.3 & 6.1-E8/Manual
ABC hand extinguishers	Col. 6.9-D.3/Manual

(8) Fire Protection Design Criteria Employed:

(a) The function is located in a fire area which is separate from the fire areas containing equipment which provide alternate means of performing the safety or shutdown function.

(b) Fire detection and suppression capability is provided and accessible.

(c) Fire stops are provided for cable tray and piping penetrations through rated fire barriers.

(9) Consequences of Fire—The postulated fire assumes the loss of the function. The provisions for core cooling systems backup are defined in Subsection 9A.2.5.

(10) Consequences of Fire Suppression—Suppression extinguishes the fire. Refer to Section 3.4, "Water Level (Flood) Design", for the drain system.

(11) Design Criteria Used for Protection Against Inadvertent Operation, Careless Operation or Rupture of the Suppression System:

(a) Location of the manual suppression system internal to the room

(b) Provision of raised supports for the equipment

(c) Refer to Section 3.4, "Water Level (Flood) Design", for the drain system.

(d) ANSI B31.1 standpipe (rupture unlikely)

(12) Fire Containment or Inhibiting Methods Employed:

(a) The functions are located in a separate fire-resistive enclosure.

(b) Fire stops are provided for cable tray and piping penetrations through fire rated barriers.

(c) The means of fire detection, suppression and alarming are provided and accessible.

(13) Remarks:

(a) The corridor contains piping and cable trays in its upper elevation.

(b) The Reactor Protection System scram solenoid fuse panels H22-P055C,F,G,H are all mounted in this room. Section 9A.5, Special Cases provides justification for locating equipment from multiple safety divisions in the room.

9A.4.1.2.14 FMCRD Panel Room (Rm No. 220)

(1) Fire Area—F1200

(2) Equipment: Control panels for the FMCRD handling machine.

Safety-Related	Provides Core Cooling
No	No

(3) Radioactive Material Present—None.

(4) Qualifications of Fire Barriers—The room is in division 2 fire area F1200. The exterior walls, and the ceiling are fire barriers of 3 h fire-resistive concrete construction. The floor and remaining walls are concrete but are not rated as they are internal to fire area F1200. A non rated door provides entry to the room from maintenance area B (Rm 221).

(5) Combustibles Present:

Fire Loading	Total Heat of Combustion (MJ)
Divisional cable trays containing 14 kg/m of XLPE-FR cable insulation	727 MJ/m^2, NCLL (727 MJ/m^2 maximum average) applies.

(6) Detection Provided—Class A supervised POC in the room and manual alarm pull station at Col. 2.4-E.9 and 1.1-D.01.

(7) Suppression Available:

Type	Location/Actuation
Standpipe and hose reel	Col. 2.4-E.9 and 1.1-D.01/Manual
ABC hand extinguishers	Col. 2.4-E.9 and 1.1-D.01/Manual

(8) Fire Protection Design Criteria Employed:

(a) The function is not safety-related and its loss due to a fire is acceptable.

(b) Fire detection and suppression capability is provided and accessible.

(c) Fire stops are provided for cable tray and piping penetrations through rated fire barriers.

(9) Consequences of Fire—The postulated fire assumes the loss of the function.

(10) Consequences of Fire Suppression—Suppression extinguishes the fire. Refer to Section 3.4, "Water Level (Flood) Design", for the drain system.

(11) Design Criteria Used for Protection Against Inadvertent Operation, Careless Operation or Rupture of the Suppression System:

(a) Location of the manual suppression system external to the room

(b) Provision of raised supports for the equipment

(c) Refer to Section 3.4, "Water Level (Flood) Design", for the drain system.

(d) ANSI B31.1 standpipe (rupture unlikely)

(12) Fire Containment or Inhibiting Methods Employed:

(a) The functions are located in a separate fire-resistive enclosure.

(b) Fire stops are provided for cable tray and piping penetrations through fire rated barriers.

(c) The means of fire detection, suppression and alarming are provided and accessible.

(13) Remarks—None

9A.4.1.2.15 FMCRD Maintenance Room (Rm No. 225/233)

(1) Fire Area—F1300

(2) Equipment: See Table 9A.6-2

Safety-Related	Provides Core Cooling
No	No

(3) Radioactive Material Present—Minor amounts of contamination on the FMCRD drives during maintenance periods. Any radiation release is contained within the secondary containment.

(4) Qualifications of Fire Barriers—The room is in division 3 fire area F1300. The walls common with Division 2 fire area F1200 and the elevator tower and stairwell are fire barriers. Also, portion of the ceiling in room 225 serves as the floor for the division 2 emergency electrical room (Rm 326) above and is a fire barrier. The fire barriers are 3 h fire-resistive concrete construction. The remaining portions of the ceiling, and walls are concrete but are not rated as they are internal to fire area F1300. There is a partitioned off area for FMCRD motor maintenance within the room. A non rated door provides access from room 231. A 3 h fire rated door provides access from maintenance room B (Rm 221). The lower drywell equipment hatch (Rm 223) is accessed from this room via a non rated sliding shield door. v With the exception of floor area F.0-G.0 and 6-0-7.0, the entire floor is a 3 h barrier. The division 3 electrical equipment room is located on the floor above, directly over this room. There are no division 3 cables or HVAC ducts entering the division 3 electrical equipment room through the floor/ceiling which is common with the FMRCD maintenance room.

(5) Combustibles Present:

Fire Loading	Total Heat of Combustion (MJ)
Variable	727 MJ/m^2 NCLL (727 MJ/m^2 maximum average) applies.

(6) Detection Provided—Class A supervised POC in the room and manual alarm pull station at Col. 6.1-E.8.

(7) Suppression Available:

Type	Location/Actuation
Standpipe and hose reel	Col.6.1-E.8 & 2.4-F.0/Manual
ABC hand extinguishers	Col.6.0-E.9/Manual

(8) Fire Protection Design Criteria Employed:

(a) The function is located in a fire area which is separate from the fire areas containing equipment which provide alternate means of performing the safety or shutdown function.

(b) Fire detection and suppression capability is provided and accessible.

(c) Fire stops are provided for cable tray and piping penetrations through rated fire barriers.

(9) Consequences of Fire—The postulated fire assumes the loss of the function. The provisions for core cooling systems backup are defined in Subsection 9A.2.5.

(10) Consequences of Fire Suppression—Suppression extinguishes the fire. Refer to Section 3.4, "Water Level (Flood) Design", for the drain system.

(11) Design Criteria Used for Protection Against Inadvertent Operation, Careless Operation or Rupture of the Suppression System:

(a) Location of the manual suppression system external to the room

(b) Provision of raised supports for the equipment

(c) Refer to Section 3.4, "Water Level (Flood) Design", for the drain system.

(d) ANSI B31.1 standpipe (rupture unlikely)

(12) Fire Containment or Inhibiting Methods Employed:

(a) The functions are located in a separate fire-resistive enclosure.

(b) Fire stops are provided for cable tray and piping penetrations through fire rated barriers.

(c) The means of fire detection, suppression and alarming are provided and accessible.

(13) Remarks—None

9A.4.1.2.16 Not Used

9A.4.1.2.17 Lower Drywell Equipment Access (Rm No. 223)

(1) Fire Area—F1300

(2) Equipment: See Table 9A.6-2

Safety-Related	Provides Core Cooling
No	No

(3) Radioactive Material Present—None that can be released as a result of fire.

(4) Qualifications of Fire Barriers—The room is within division3 fire area F1300. The wall common with the RHR "B", HPCF "B" pump room (Rm 221), a small portion of the ceiling common with the floor of the emergency electrical room B (Rm 326) and Corridor B (Rm 321) are of 3 h fire-resistive concrete construction. The remainder of the ceiling, the walls and the entire floor are concrete and are not rated as they are internal to fire area F1300. Access to the room is at elevation –2580 from the FMCRD maintenance room (Rm 225). The equipment hatch for the lower cavity is contained in the room. Hydraulic control unit lines pass through the room to enter containment via the upper area of the equipment lock. The containment serves as one wall for the room.

(5) Combustibles Present:

Fire Loading	Total Heat of Combustion (MJ)
None	727 MJ/m^2 NCLL (727 MJ/m^2 maximum average) applies.

(6) Detection Provided—Class A supervised POC in the room and manual alarm pull station at Col. 3.8-F.0 and 6.1-E.8.

(7) Suppression Available:

Type	Location/Actuation
Standpipe and hose reel	Col. 3.8-F.0 & 6.1-E8/Manual
ABC hand extinguishers	Col. 3.8-F.0 & 6.1-E9/Manual

(8) Fire Protection Design Criteria Employed:

(a) The function is located in a room which is separate from rooms containing other equipment.

(b) Fire detection and suppression capability is provided and accessible.

(c) Fire stops are provided for cable tray and piping penetrations through rated fire barriers.

(9) Consequences of Fire—The postulated fire assumes the loss of the function. Alternate entry to the lower cavity is provided by the personnel access lock located directly across the containment.

(10) Consequences of Fire Suppression—Suppression extinguishes the fire.Refer to Section 3.4, "Water Level (Flood) Design", for the drain system.

(11) Design Criteria Used for Protection Against Inadvertent Operation, Careless Operation or Rupture of the Suppression System:

(a) Location of the manual suppression system external to the room

(b) Provision of raised supports for the equipment

(c) Refer to Section 3.4, "Water Level (Flood) Design", for the drain system.

(d) ANSI B31.1 standpipe (rupture unlikely)

(12) Fire Containment or Inhibiting Methods Employed:

(a) The functions are located in a separate fire-resistive enclosure.

(b) Fire stops are provided for cable tray and piping penetrations through fire rated barriers.

(c) The means of fire detection, suppression and alarming are provided and accessible.

(13) Remarks:

(a) The room contains cable in conduit only.

(b) A hose reel and portable extinguisher has been provided in the room for possible use in the lower drywell if needed during a maintenance outage.

9A.4.1.2.18 Not Used

9A.4.1.2.19 Not Used

9A.4.1.2.20 Corridor B/C (Rm No. 224/234)

(1) Fire Area—F1300

(2) Equipment: See Table 9A.6-2

Safety-Related	Provides Core Cooling
Yes, D3	Yes, D3

(3) Radioactive Material Present—None that can be released as a result of fire.

(4) Qualifications of Fire Barriers—The corridor provides access between (C) and (B) maintenance areas. There is a 3 h fire-resistive door at the "B" end of the corridor. The corridor is within division 3 fire area F1300. The portion of the floor located over rooms 123 and 134 area, F.7-G.0 and 1.8-6.0 and the exterior walls are of concrete construction with a fire resistance rating of 3 hours. The

remainder of the ceiling, the side walls and the remainder of the floor is of concrete construction but are not fire rated. Portion of the ceiling area F.7-G.0 and 2.0-5.0 is a 3 h fire barrier.

(5) Combustibles Present:

Fire Loading	Total Heat of Combustion (MJ)
None	727 MJ/m^2 NCLL (727 MJ/m^2 maximum average) applies.

(6) Detection Provided—Class A supervised POC in the room and manual alarm pull station at Col. 6.1-E.8.

(7) Suppression Available:

Type	Location/Actuation
Standpipe and hose reel	Col. 6.1-E.8 & 2.4-F.0/Manual
ABC hand extinguishers	Col. 6.1-E.8 & 2.4-F.0/Manual

(8) Fire Protection Design Criteria Employed:

(a) Alternate routes are provided for access to areas served by the corridor.

(b) Fire detection and suppression capability is provided and accessible.

(c) Fire stops are provided for cable tray and piping penetrations through rated fire barriers.

(9) Consequences of Fire—The postulated fire assumes the loss of the function. The function is not safety-related and its temporary loss is acceptable.

(10) Consequences of Fire Suppression—Suppression extinguishes the fire. Refer to Section 3.4, “Water Level (Flood) Design”, for the drain system.

(11) Design Criteria Used for Protection Against Inadvertent Operation, Careless Operation or Rupture of the Suppression System:

(a) Location of the manual suppression system internal to the room

(b) Refer to Section 3.4, “Water Level (Flood) Design”, for the drain system.

(c) ANSI B31.1 standpipe (rupture unlikely)

(12) Fire Containment or Inhibiting Methods Employed:

(a) The functions are located in a separate fire-resistive enclosure.

(b) Fire stops are provided for cable tray and piping penetrations through fire rated barriers.

(c) The means of fire detection, suppression and alarming are provided and accessible.

(13) Remarks—The room contains cable in conduit only.

9A.4.1.2.21 Not Used

9A.4.1.2.22 Corridor and Maintenance Area B (Rm No. 221)

(1) Fire Area—F1200

(2) Equipment: See Table 9A.6-2

Safety-Related	Provides Core Cooling
Yes, D2	Yes, D2

(3) Radioactive Material Present—None that can be released as a result of fire.

(4) Qualifications of Fire Barriers—This corridor includes a maintenance area with floor hatches for removal of division 2 ECCS equipment. The wall common with rooms 223, 224, 225 the elevator (Rm 194), stair tower (Rm 293), and the exterior walls are fire barriers. Portion of the ceiling where division 4 RPS instrument Rack room (Rm 345) RIP Panels (320), room 321, room 326 emergency electrical “B”, the elevator (Rm 328), and the stairwell (Rm 329) are located above the fire barriers. All fire barriers have a 3 h fire-resistive rating. All fire barriers have a 3 h fire-resistive rating. The remaining portions of the walls and ceiling and the entire floor are concrete but are not rated as they are internal to fire area F1200. Three hour fire-resistive doors provide access to stairwell and elevator No.2. 3 h rated door open to the corridor C (Rm 224). A portion of one wall is formed by the primary containment. There are four floor hatches for removal of equipment from the rooms on the floor below. Corridor D (Rm 244) connects to this room without an intervening fire door as both rooms are in fire area F1200.

(5) Combustibles Present:

Fire Loading	Total Heat of Combustion (MJ)
Divisional cable trays containing 14 kg/m of XLPE-FR cable insulation	727 MJ/m^2, NCLL (727 MJ/m^2 maximum average) applies.

(6) Detection Provided—Class A supervised POC in the room and manual alarm pull station at Col. 2.4-E.9.

(7) Suppression Available:

Type	Location/Actuation
Standpipe and hose reel	Col. 2.4-E.9 & 1.1-D.0/Manual
ABC hand extinguishers	Col. 2.4-E.9 & 1.1-D.0/Manual

(8) Fire Protection Design Criteria Employed:

(a) The function is located in a fire area which is separate from the fire areas containing equipment which provide alternate means of performing the safety or shutdown function.

(b) Fire detection and suppression capability is provided and accessible.

(c) Fire stops are provided for cable tray and piping penetrations through rated fire barriers.

(9) Consequences of Fire—The postulated fire assumes the loss of the function. The provisions for core cooling systems backup are defined in Subsection 9A.2.5.

(10) Consequences of Fire Suppression—Suppression extinguishes the fire.Refer to Section 3.4, “Water Level (Flood) Design”, for the drain system.

(11) Design Criteria Used for Protection Against Inadvertent Operation, Careless Operation or Rupture of the Suppression System:

(a) Location of the manual suppression system internal to the room

(b) Provision of raised supports for the equipment

(c) Refer to Section 3.4, “Water Level (Flood) Design”, for the drain system.

(d) ANSI B31.1 standpipe (rupture unlikely)

(12) Fire Containment or Inhibiting Methods Employed:

(a) The functions are located in a separate fire-resistive enclosure.

(b) Fire stops are provided for cable tray and piping penetrations through fire rated barriers.

(c) The means of fire detection, suppression and alarming are provided and accessible.

(13) Remarks—The corridor contains piping and cable trays in its upper elevation.

9A.4.1.2.23 HPCF (B) /RHR (B) Pipe Space (Rm No. 222)

(1) Fire Area—F1200

(2) Equipment: See Table 9A.6-2

Safety-Related	Provides Core Cooling
Yes, D2	Yes, D2

(3) Radioactive Material Present—None that can be released as a result of fire.

(4) Qualifications of Fire Barriers—The walls, ceiling and floor are concrete but are not fire rated as they are internal to fire area F1200. The containment serves as one wall of the room. Access and egress from the room is provided through a non rated door through a vestibule from the division B corridor (Rm 221).

(5) Combustibles Present:

Fire Loading	Total Heat of Combustion (MJ)
None	727 MJ/m^2 NCLL (727 MJ/m^2 maximum average) applies.

(6) Detection Provided—Class A supervised POC in the room and manual alarm pull station at Col. 2.4-E.9 and 1.1-D.0.

(7) Suppression Available:

Type	Location/Actuation
Standpipe and hose reel	Col. 2.4-E.9 & 1.1-D.0/Manual
ABC hand extinguishers	Col. 2.4-E.9 & 1.1-D.0/Manual

(8) Fire Protection Design Criteria Employed:

(a) The function is located in a separate concrete enclosure.

(b) Fire detection and suppression capability is provided and accessible.

(c) Fire stops are provided for cable tray and piping penetrations through rated fire barriers.

(9) Consequences of Fire—The postulated fire assumes the loss of the function. The provisions for core cooling systems backup are defined in Subsection 9A.2.5.

(10) Consequences of Fire Suppression—Suppression extinguishes the fire. Refer to Section 3.4, “Water Level (Flood) Design”, for the drain system.

(11) Design Criteria Used for Protection Against Inadvertent Operation, Careless Operation or Rupture of the Suppression System:

(a) Location of the manual suppression system external to the room

(b) Provision of raised supports for the equipment

(c) Refer to Section 3.4, “Water Level (Flood) Design”, for the drain system.

(d) ANSI B31.1 standpipe (rupture unlikely)

(12) Fire Containment or Inhibiting Methods Employed:

(a) The functions are located in a separate fire-resistive enclosure.

(b) The means of fire detection, suppression and alarming are provided and accessible.

(c) Fire stops are provided for cable tray and piping penetrations through rated fire barriers.

(13) Remarks—None

9A.4.1.2.24 (Rm No. 242)

(1) Fire Area—F1200

(2) Equipment: See Table 9A.6-2

Safety-Related	Provides Core Cooling
No	No

(3) Radioactive Material Present—None that can be released as a result of fire.

(4) Qualifications of Fire Barriers—The walls and the floor are concrete and are not fire rated. One wall is formed by the containment. The ceiling forms part of the fire barrier for the division 4 RPV instrument rack room located above this room. There is an opening to corridor B (Rm 221). All personnel entry and egress is by this single path. Access to the CUW regenerative heat exchanger and CUW valve room is provided (Rm 241) from this room.

(5) Combustibles Present—No significant quantities of exposed combustibles. 727 MJ/m^2 NCLL (727 MJ/m^2 maximum average) applies.

(6) Detection Provided—Class A supervised POC in the room and manual alarm pull stations at Col. 1.1-D.0 in the corridor.

(7) Suppression Available:

Type	Location/Actuation
Standpipe and hose reel	Col. 1.1-D.0/Manual
ABC hand extinguishers	Col. 1.1-D.0/Manual

(8) Fire Protection Design Criteria Employed:

(a) The function is located in a room separate from the rooms which contain safety-related systems.

(b) Fire detection and suppression capability is provided and accessible.

(9) Consequences of Fire—The postulated fire assumes the loss of the function. The function is not safety-related and its loss is acceptable.

(10) Consequences of Fire Suppression—Suppression extinguishes the fire.Refer to Section 3.4, “Water Level (Flood) Design”, for the drain system.

(11) Design Criteria Used for Protection Against Inadvertent Operation, Careless Operation or Rupture of the Suppression System:

(a) Location of the manual suppression system external to the room

(b) Provision of raised supports for the equipment

(c) Refer to Section 3.4, "Water Level (Flood) Design", for the drain system.

(d) ANSI B31.1 standpipe (rupture unlikely)

(12) Fire Containment or Inhibiting Methods Employed:

(a) The functions are located in a separate fire-resistive enclosure.

(b) The means of fire detection, suppression and alarming are provided and accessible.

(13) Remarks—None

9A.4.1.2.25 Not Used

9A.4.1.2.26 Not Used

9A.4.1.2.27 Not Used

9A.4.1.2.28 Not Used

9A.4.1.2.29 CUW Regen Hx, Valve and Pipe Room (Rm No. 241)

(1) Fire Area—F1200

(2) Equipment: See Table 9A.6-2

Safety-Related	Provides Core Cooling
Yes, D1, D2, D3 & D4	Yes, D1, D2, D3 & D4

(3) Radioactive Material Present—None that can be released as a result of fire.

(4) Qualifications of Fire Barriers—The CUW Regen Hx room and the CUW valve room are separated by a common wall. The walls, floor and ceiling are concrete and are not fire rated. The primary containment acts as one wall of the room. A non-rated door provides access to the CUW valve room. An opening through this room provides access to the CUW Regen Hx room. A ladder in the CUW valve room provides access to the CUW pipe space area at

elevation 1600 mm. A metal grating joins the two sections of the pipe space grading at elevation 1500 mm. Equipment removal is through removable plugs in the wall at row C.7.

(5) Combustibles Present—No significant quantities of exposed combustibles. 727 MJ/m^2 NCLL (727 MJ/m^2 maximum average) applies.

(6) Detection Provided—Class A supervised POC in the room and manual alarm pull stations at Col. 1.1-D.0 and 1.1-A.1 in the corridor.

(7) Suppression Available:

Type	Location/Actuation
Standpipe and hose reel	Col. 1.1-D.0 & 1.1-A.1/Manual
ABC hand extinguishers	Col. 1.1-D.0 & 1.1-A.1/Manual

(8) Fire Protection Design Criteria Employed:

(a) The function is located in a room separate from the rooms which contain safety-related equipment.

(b) Fire detection and suppression capability is provided and accessible.

(c) Fire stops are provided for cable tray and piping penetrations through rated fire barriers.

(9) Consequences of Fire—The postulated fire assumes the loss of the function. The provisions for core cooling systems backup are defined in Subsection 9A.2.5.

(10) Consequences of Fire Suppression—Suppression extinguishes the fire. Refer to Section 3.4, “Water Level (Flood) Design”, for the drain system.

(11) Design Criteria Used for Protection Against Inadvertent Operation, Careless Operation or Rupture of the Suppression System:

(a) Location of the manual suppression system external to the room

(b) Provision of raised supports for the equipment

(c) Refer to Section 3.4, “Water Level (Flood) Design”, for the drain system.

(d) ANSI B31.1 standpipe (rupture unlikely)

(12) Fire Containment or Inhibiting Methods Employed:

(a) The functions are located in a separate fire-resistive enclosure.

(b) The means of fire detection, suppression and alarming are provided and accessible.

(13) Remarks—Temperature Elements E31-009A, B, D, T, U, V, W of Leak Detection System, solenoid valves T31-F739D, T31-F741, and Level Transmitter T31-LT058D of the Atmospheric Control System are all mounted in this room. Section 9A.5, Special Cases provides justification for locating equipment from multiple safety divisions in this room.

9A.4.1.2.30 Not Used

9A.4.1.2.31 Radioactive Drain Valve Room (Rm No. 251)

(1) Fire Area—F1100

(2) Equipment: See Table 9A.6-2

Safety-Related	Provides Core Cooling
No	No

(3) Radioactive Material Present—None that can be released as a result of fire.

(4) Qualifications of Fire Barriers—The room is within division 1 fire area F1100. The wall common with FPC Holding pump and F/P valve room (Rm 248) is a fire barrier of 3 h fire-resistive concrete construction. The remainder walls, ceiling and floor are concrete but are not fire rated as they are internal to fire area F1100. Access and egress from the room is provided through a nonrated door to the division 1 corridor (Rm 210).

(5) Combustibles Present:

Fire Loading	Total Heat of Combustion (MJ)
None	727 MJ/m^2 NCLL (727 MJ/m^2 maximum average) applies.

(6) Detection Provided—Class A supervised POC in the room and manual alarm pull station at Col. 4.2-A.9 and 6.1-B.1.

(7) Suppression Available:

Type	Location/Actuation
Standpipe and hose reel	Col. 4.2-A.9 & 6.1-B.1/Manual
ABC hand extinguishers	Col. 4.2-A.9 & 6.1-B.1/Manual

(8) Fire Protection Design Criteria Employed:

(a) The function is located in a separate fire-resistive enclosure.

(b) Fire detection and suppression capability is provided and accessible.

(c) Fire stops are provided for cable tray and piping penetrations through rated fire barriers.

(9) Consequences of Fire—The postulated fire assumes the loss of the function. The function is not safety-related, therefore the lose of function is acceptable.

(10) Consequences of Fire Suppression—Suppression extinguishes the fire. Refer to Section 3.4, “Water Level (Flood) Design”, for the drain system.

(11) Design Criteria Used for Protection Against Inadvertent Operation, Careless Operation or Rupture of the Suppression System:

(a) Location of the manual suppression system external to the room

(b) Provision of raised supports for the equipment

(c) Refer to Section 3.4, “Water Level (Flood) Design”, for the drain system.

(d) ANSI B31.1 standpipe (rupture unlikely)

(12) Fire Containment or Inhibiting Methods Employed:

(a) The functions are located in a separate fire-resistive enclosure.

(b) The means of fire detection, suppression and alarming are provided and accessible.

(c) Fire stops are provided for cable tray and piping penetrations through rated fire barriers.

(13) Remarks—None

9A.4.1.2.32 Corridor D (Rm No. 244)

(1) Fire Area—F1200

(2) Equipment: See Table 9A.6-2

Safety-Related	Provides Core Cooling
Yes, D2	Yes, D2

(3) Radioactive Material Present—None that can be released as a result of fire.

(4) Qualifications of Fire Barriers—The ceiling, the exterior walls and the floor common with the –8200 mm level between columns 2.6 and 3.1 are of 3 h fire-resistive concrete construction. The remainder of the floor, walls are concrete and are not fire rated. A pair of 3 h fire-resistive doors open to corridor A (Rm 210) for access from one corridor to the other. The other end of the corridor opens directly to corridor B (Rm 221). Non rated doors provide access from the corridor to the valve room for CUW Holding pump rooms A and B (Rm 243), and FPC Holding Pump rooms A and B (Rm 248) rooms.

(5) Combustibles Present—No significant quantities of exposed combustibles. 727 MJ/m^2 NCLL (727 MJ/m^2 maximum average) applies.

(6) Detection Provided—Class A supervised POC in the room and manual alarm pull stations at Col. 1.1-A.1 in the corridor.

(7) Suppression Available:

Type	Location/Actuation
Standpipe and hose reel	Col. 1.1-A.1/Manual
ABC hand extinguishers	Col. 1.1-A.1/Manual

(8) Fire Protection Design Criteria Employed:

(a) The function is located in a room separate from the rooms which contain safety-related equipment.

(b) Fire detection and suppression capability is provided and accessible.

(c) Fire stops are provided for cable tray and piping penetrations through rated fire barriers.

(9) Consequences of Fire—The postulated fire assumes the loss of the function. The provisions for core cooling systems backup are defined in Section 9A.2.5.

(10) Consequences of Fire Suppression—Suppression extinguishes the fire. Refer to Section 3.4, "Water Level (Flood) Design", for the drain system.

(11) Design Criteria Used for Protection Against Inadvertent Operation, Careless Operation or Rupture of the Suppression System:

(a) Location of the manual suppression system external to the room

(b) Provision of raised supports for the equipment

(c) Refer to Section 3.4, "Water Level (Flood) Design", for the drain system.

(d) ANSI B31.1 standpipe (rupture unlikely)

(12) Fire Containment or Inhibiting Methods Employed:

(a) The functions are located in a separate fire-resistive enclosure.

(b) The means of fire detection, suppression and alarming are provided and accessible.

(13) Remarks—None

9A.4.1.2.33 Vacuum Cleaning Room (Rm No. 219)

(1) Fire Area—F1100

(2) Equipment: See Table 9A.6-2

Safety-Related	Provides Core Cooling
Yes, D2	Yes, D2

(3) Radioactive Material Present—None that can be released as a result of fire.

(4) Qualifications of Fire Barriers—The room is within division 1 fire area F1100. The walls, ceiling and floor are concrete but are not fire rated as they are internal to fire area F1100. Access and egress from the room is provided through a nonrated door via a ramp to the division 1 corridor (Rm 210).

(5) Combustibles Present:

Fire Loading	Total Heat of Combustion (MJ)
None	727 MJ/m^2 NCLL (727 MJ/m^2 maximum average) applies.

(6) Detection Provided—Class A supervised POC in the room and manual alarm pull station at Col. 6.1-B.1

(7) Suppression Available:

Type	Location/Actuation
Standpipe and hose reel	Col. 6.1-B.1/Manual
ABC hand extinguishers	Col. 6.1-B.1/Manual

(8) Fire Protection Design Criteria Employed:

(a) The function is located in a separate fire-resistive enclosure.

(b) Fire detection and suppression capability is provided and accessible.

(9) Consequences of Fire—The postulated fire assumes the loss of the function. The function is not safety-related, therefore the lose of function is acceptable.

(10) Consequences of Fire Suppression—Suppression extinguishes the fire. Refer to Section 3.4, “Water Level (Flood) Design”, for the drain system.

(11) Design Criteria Used for Protection Against Inadvertent Operation, Careless Operation or Rupture of the Suppression System:

(a) Location of the manual suppression system external to the room

(b) Provision of raised supports for the equipment

(c) Refer to Section 3.4, “Water Level (Flood) Design”, for the drain system.

(d) ANSI B31.1 standpipe (rupture unlikely)

(12) Fire Containment or Inhibiting Methods Employed:

(a) The functions are located in a separate fire-resistive enclosure.

(b) The means of fire detection, suppression and alarming are provided and accessible.

(13) Remarks—None

9A.4.1.2.34 FPC Holding Pump and F/D Valve Room (Rm No. 248)

(1) Fire Area—F1200

(2) Equipment: See Table 9A.6-2

Safety-Related	Provides Core Cooling
No	No

(3) Radioactive Material Present—None that can be released as a result of fire.

(4) Qualifications of Fire Barriers—Portion of the ceiling where room 342 is located is fire barrier, and is of 3 h fire-resistive concrete construction. The remaining portion of the ceiling, the floors, and the walls are concrete and are not fire rated. Access to the room is through a non rated door from corridor D (Rm 244) via a personnel shield. All personnel entry and egress is by this single path. The entry doorway is common for rooms A and B. Access to each of the FPC F/D valve rooms A and B is provided via a ladder from its associated pump room to the grading at elevation 1500 mm. There is a metal grating at elevation 1900 mm in each room.

(5) Combustibles Present—No significant quantities of exposed combustibles. 727 MJ/m^2 NCLL (727 MJ/m^2 maximum average) applies.

(6) Detection Provided—Class A supervised POC in the room and manual alarm pull stations at Col. 1.1-A.1 in the corridor.

(7) Suppression Available:

Type	Location/Actuation
Standpipe and hose reel	Col. 1.1-A.1/Manual
ABC hand extinguishers	Col. 1.1-A.1/Manual

(8) Fire Protection Design Criteria Employed:

(a) The function is located in a room separate from the rooms which contain safety-related equipment.

(b) Fire detection and suppression capability is provided and accessible.

(9) Consequences of Fire—The postulated fire assumes the loss of the function. The function is not safety-related, therefore the loss of the function is acceptable.

(10) Consequences of Fire Suppression—Suppression extinguishes the fire. Refer to Section 3.4, “Water Level (Flood) Design”, for the drain system.

(11) Design Criteria Used for Protection Against Inadvertent Operation, Careless Operation or Rupture of the Suppression System:

(a) Location of the manual suppression system external to the room

(b) Provision of raised supports for the equipment

(c) Refer to Section 3.4, "Water Level (Flood) Design", for the drain system.

(d) ANSI B31.1 standpipe (rupture unlikely)

(12) Fire Containment or Inhibiting Methods Employed:

(a) The functions are located in a separate fire-resistive enclosure.

(b) The means of fire detection, suppression and alarming are provided and acceptable.

(13) Remarks—None

9A.4.1.2.35 CUW Holding Pump Rooms A and B (Rm No. 243)

(1) Fire Area—F1200

(2) Equipment: See Table 9A.6-2

Safety-Related	Provides Core Cooling
No	No

(3) Radioactive Material Present—None that can be released as a result of fire.

(4) Qualifications of Fire Barriers—The CUW pump rooms A and B are separated by a common wall. The wall common with HCU pipe room (Rm No. 214) is a fire barrier of 3 h fire-resistive concrete construction. The primary containment acts as one wall of the room. The floors, the remainder of the walls and ceiling are concrete and are not fire rated. Access to the room is through a labyrinth passage from the common entry door for both pump rooms. There is a stair case in each pump room which leads to a metal grating at elevation 1000 mm. The upper elevation space is used as a CUW F/D valve room for the each of the corresponding pumps A and B below. The CUW pipe space (Rm 241) occupies a portion of the upper volume of this room.

(5) Combustibles Present—No significant quantities of exposed combustibles. 727 MJ/m^2 NCLL (727 MJ/m^2 maximum average) applies.

(6) Detection Provided—Class A supervised POC in the room and manual alarm pull stations at Col. 1.1-A.1 in the corridor.

(7) Suppression Available:

Type	Location/Actuation
Standpipe and hose reel	Col. 1.1-A.1/Manual
ABC hand extinguishers	Col. 1.1-A.1/Manual

(8) Fire Protection Design Criteria Employed:

(a) The function is located in a room separate from the rooms which contain safety-related equipment.

(b) Fire detection and suppression capability is provided and accessible.

(c) Fire stops are provided for cable tray and piping penetrations through rated fire barriers.

(9) Consequences of Fire—The postulated fire assumes the loss of the function. The function is not safety-related, therefore the loss of the function is acceptable.

(10) Consequences of Fire Suppression—Suppression extinguishes the fire. Refer to Section 3.4, “Water Level (Flood) Design”, for the drain system.

(11) Design Criteria Used for Protection Against Inadvertent Operation, Careless Operation or Rupture of the Suppression System:

(a) Location of the manual suppression system external to the room

(b) Provision of raised supports for the equipment

(c) Refer to Section 3.4, “Water Level (Flood) Design”, for the drain system.

(d) ANSI B31.1 standpipe (rupture unlikely)

(12) Fire Containment or Inhibiting Methods Employed:

(a) The functions are located in a separate fire-resistive enclosure.

(b) The means of fire detection, suppression and alarming are provided and accessible.

(13) Remarks—None

9A.4.1.3 Building—Reactor Bldg El 4800 mm

9A.4.1.3.1 Lower Drywell (Rm No. 391)

(1) Fire Area—F1901

(2) Equipment: See Table 9A.6-2 for this elevation. Devices within the lower drywell are also listed at floor elevations –8200 mm and –1700 mm as appropriate.

Note: Section 9A.4.1.01 applies for the remainder of the information for the drywell. See that section for additional information.

9A.4.1.3.2 Wet Well (Rm No. 390)

(1) Fire Area—F1900

(2) Equipment: See Table 9A.6-2

Note: Section 9A.4.1.02 applies for the remainder of the information for the wetwell. See that section for additional information.

9A.4.1.3.3 Emergency Electric Room A (Rm No. 310)

(1) Fire Area—F3100

(2) Equipment: See Table 9A.6-2

Safety-Related	Provides Core Cooling
Yes, D1	Yes, D1

(3) Radioactive Material Present—None.

(4) Qualifications of Fire Barriers—Floor, the exterior wall common with corridor (clean area for personnel access) leading to the control building, the wall common with RIP panel room (Rm 315), the wall common with the elevator and the stairwell, the wall common with corridor A (Rm 311), the wall common with corridor D (Rm 344), the wall common with room 342, the wall common with division 4 multiplexing room (Rm 381), and the ceiling which is in common with fire area F4900, F4100, F4101, F4102 on the 12300 mm level, and Fire area F1200 on the 8500 mm level are of 3 h fire-resistive concrete construction. The remainder of the walls are concrete and are not rated as they are internal to fire area F3100. There is one 3 h fire-resistive double door which provides access from the control building, and one 3 h fire-resistive door which provides access to division 4 multiplexing room.

(5) Combustibles Present:

Fire Loading	Total Heat of Combustion (MJ)
Cable Tray	727 MJ/m^2 NCLL (727 MJ/m^2 maximum average) applies.

(6) Detection Provided—Class A supervised POC in the room and manual alarm pull station outside the room in the reactor building clean area leading to the control building corridor.

(7) Suppression Available:

Type	Location/Actuation
Standpipe and hose reel with an electrically safe nozzle	Outside the room in the reactor building clean area leading to the control building corridor/ Manual
ABC hand extinguishers	Outside the room in the reactor building clean area leading to the control building corridor/ Manual

(8) Fire Protection Design Criteria Employed:

(a) The function is located in a fire area which is separate from the fire areas containing equipment which provide alternate means of performing the safety or shutdown function.

(b) Fire detection and suppression capability is provided and accessible.

(c) Fire stops are provided for cable tray and piping penetrations through rated fire barriers.

(9) Consequences of Fire—The postulated fire assumes the loss of the function. The provisions for core cooling systems backup are defined in Subsection 9A.2.5.

Smoke from a fire will be removed by the EHVAC(A) system operating in its smoke removal mode.

(10) Consequences of Fire Suppression—Suppression extinguishes the fire. Refer to Section 3.4, “Water Level (Flood) Design”, for the drain system.

(11) Design Criteria Used for Protection Against Inadvertent Operation, Careless Operation or Rupture of the Suppression System:

(a) Location of the manual suppression system external to the room

(b) Provision of raised supports for the equipment

(c) Refer to Section 3.4, "Water Level (Flood) Design", for the drain system.

(d) ANSI B31.1 standpipe (rupture unlikely)

(12) Fire Containment or Inhibiting Methods Employed:

(a) The functions are located in a separate fire-resistive enclosure.

(b) The means of fire detection, suppression and alarming are provided and accessible.

(13) Remarks—None

9A.4.1.3.4 Corridor A (Rm No. 311)

(1) Fire Area—F1100

(2) Equipment: See Table 9A.6-2

Safety-Related	Provides Core Cooling
Yes, D1	Yes, D1

(3) Radioactive Material Present—None that can be released as a result of fire.

(4) Qualifications of Fire Barriers—The wall common with the CUW filter demineralizer area (Rm 347), the wall common with Emergency Electrical Room A (Rm 310), the wall common with the RIP Panel (Rm 315), the wall common with the Elevator (Rm 192) and stair-well (Rm 292) serve as fire barriers between adjacent fire areas and are of 3 h fire-resistive concrete construction. The remainder of the walls, the ceiling and the floor are concrete and are not rated as they are internal to fire area F1100. The containment serves as a portion of one wall of the corridor. Access to the corridor is provided from stair and elevator No.1, corridor C (Rm 335) and corridor D (Rm 344) via 3 h fire-resistive doors. The corridor provides direct access to the suppression pool personnel entry room (Rm 312), Pipe Space A (Rm 313) and RPV instrument rack room (I) (Rm 314) through nonrated doors.

(5) Combustibles Present:

Fire Loading	Total Heat of Combustion (MJ)
Cable Tray	727 MJ/m^2 NCLL (727 MJ/m^2 maximum average) applies.

(6) Detection Provided—Class A supervised POC in the room and manual alarm pull station at Col. 5.5-B.2 and 6.2-C.8.

(7) Suppression Available:

Type	Location/Actuation
Standpipe and hose reel	Col. 5.5-B.2 & 6.2-C.8/Manual
ABC hand extinguishers	Col. 5.5-B.2 & 6.2-C.8/Manual

(8) Fire Protection Design Criteria Employed:

(a) The function is located in a separate fire resistive enclosure.

(b) Fire detection and suppression capability is provided and accessible.

(c) Fire stops are provided for cable tray and piping penetrations through rated fire barriers.

(9) Consequences of Fire—The postulated fire assumes the loss of the function. The provisions for core cooling systems backup are defined in Subsection 9A.2.5.

Smoke from a fire will be removed by the normal HVAC System operating in its smoke removal mode.

(10) Consequences of Fire Suppression—Suppression extinguishes the fire. Refer to Section 3.4, “Water Level (Flood) Design”, for the drain system.

(11) Design Criteria Used for Protection Against Inadvertent Operation, Careless Operation or Rupture of the Suppression System:

(a) Location of the manual suppression system in the corridor, external to the rooms containing the majority of the safety-related equipment

(b) Provision of raised supports for the equipment

(c) Refer to Section 3.4, “Water Level (Flood) Design”, for the drain system.

(d) ANSI B31.1 standpipe (rupture unlikely)

(12) Fire Containment or Inhibiting Methods Employed:

(a) The functions are located in a separate fire-resistive enclosure.

(b) The means of fire detection, suppression and alarming are provided and accessible.

(13) Remarks—None

9A.4.1.3.5 Suppression Pool Personnel Entry Hatch (Rm No. 312)

(1) Fire Area—F1100

(2) Equipment: See Table 9A.6-2

Safety-Related	Provides Core Cooling
No	No

(3) Radioactive Material Present—None that can be released as a result of fire.

(4) Qualifications of Fire Barriers—The walls, the ceiling, and the floor are concrete and are not rated as they are internal to fire area F1100. The containment serves as one wall of the room. Access to the room is provided from corridor A (Rm 311) via a nonrated door. The room provides access to the suppression pool area of containment through a personnel lock.

(5) Combustibles Present:

Fire Loading	Total Heat of Combustion (MJ)
None	727 MJ/m^2 NCLL (727 MJ/m^2 maximum average) applies.

(6) Detection Provided—Class A supervised POC in the room and manual alarm pull station at Col. 5.5-B.2 and 6.2-C.8.

(7) Suppression Available:

Type	Location/Actuation
Standpipe and hose reel	Col. 5.5-B.1 & 6.2-C.8/Manual
ABC hand extinguishers	Col.5.5-B.1 & 6.2-C.8/Manual

(8) Fire Protection Design Criteria Employed:

(a) The function is located in a separate fire resistive enclosure.

(b) Fire detection and suppression capability is provided and accessible.

(9) Consequences of Fire—The postulated fire assumes the loss of the function. Loss of function, which is not safety-related, is acceptable.

Smoke from a fire will be removed by the normal HVAC System operating in its smoke removal mode.

(10) Consequences of Fire Suppression—Suppression extinguishes the fire. Refer to Section 3.4, “Water Level (Flood) Design”, for the drain system.

(11) Design Criteria Used for Protection Against Inadvertent Operation, Careless Operation or Rupture of the Suppression System:

(a) Location of the manual suppression system external to the room

(b) Refer to Section 3.4, “Water Level (Flood) Design”, for the drain system.

(c) ANSI B31.1 standpipe (rupture unlikely)

(d) Provision of raised supports for equipment

(12) Fire Containment or Inhibiting Methods Employed:

(a) The functions are located in a separate fire-resistive enclosure.

(b) The means of fire detection, suppression and alarming are provided and accessible.

(13) Remarks—None.

9A.4.1.3.6 Pipe Space A (Rm No. 313)

(1) Fire Area—F1100

(2) Equipment: See Table 9A.6-2

Safety-Related	Provides Core Cooling
Yes, D1,D2	Yes, D1, D2

(3) Radioactive Material Present—None that can be released as a result of fire.

(4) Qualification of Fire Barriers—The walls and the floor are concrete and are not rated as they are internal to fire area F1100. The ceiling is common to fire area F4101 and is of 3 h fire-resistive concrete construction. The containment serves as one wall of the room. Access to the room is provided from Corridor A (Rm 311) via a non rated door. The room provides access to the metal grating pipe space area, and the Rm 318 at elevation 8500 mm via the stairs.

(5) Combustibles Present:

Fire Loading	Total Heat of Combustion (MJ)
None	727 MJ/m^2 NCLL (727 MJ/m^2 maximum average) applies.

(6) Detection Provided—Class A supervised POC in the room and manual alarm pull station at Col. 5.5-B.2 and 6.2-C.8.

(7) Suppression Available:

Type	Location/Actuation
Standpipe and hose reel	Col. 5.5-B.2 & 6.2-C.8/Manual
ABC hand extinguishers	Col.5.5-B.2 & 6.2-C.8/Manual

(8) Fire Protection Design Criteria Employed:

(a) The function is located in a fire area which is separate from the fire areas containing equipment which provides alternate means of performing the safety or shutdown function.

(b) Fire detection on suppression capability is provided and accessible.

(c) Fire stops are provided for cable tray and piping penetrations through rated fire barriers.

(9) Consequences of Fire—The postulated fire assumes the loss of the function. The provisions for core cooling systems backup are defined in Subsection 9A.2.5.

Smoke from a fire will be removed by the normal HVAC System operating in its smoke removal mode.

(10) Consequences of Fire Suppression—Suppression extinguishes the fire. Refer to Section 3.4, "Water Level (Flood) Design", for the drain system.

(11) Design Criteria Used for Protection Against Inadvertent Operation, Careless Operation or Rupture of Suppression System:

(a) Location of the manual suppression system external to the room

(b) Provision of raised supports for the equipment

(c) Refer to Section 3.4, "Water Level (Flood) Design", for the drain system.

(d) ANSI B31.1 standpipe (rupture unlikely)

(12) Fire Containment or Inhibiting Methods Employed:

(a) The functions are located in a separate fire-resistive enclosure.

(b) The means of fire detection, suppression and alarming are provided and accessible.

(13) Remarks—MO valve E51-F039 of the RCIC, and solenoid valves T31-720A,B of the Atmospheric Control System are all mounted in this room. Section 9A.5, Special Cases provides justification for locating equipment from multiple safety divisions in this room.

9A.4.1.3.7 Instrument Rack (I) (Rm No. 314)

(1) Fire Area—F1100

(2) Equipment: See Table 9A.6-2

Safety-Related	Provides Core Cooling
Yes, D1	Yes, D1

(3) Radioactive Material Present—None that can be released as a result of fire.

(4) Qualifications of Fire Barriers—The wall common with the RPV instrument rack (III) room (Rm 332) serves as a fire barrier between fire areas F1100 and F1300 and is of 3 h fire-resistive concrete construction. The remainder of the walls, the ceiling and the floor are concrete and are not rated as they are internal to fire area F1100. The containment serves as one wall of the room. Access to the room is provided from corridor A (Rm 311) through a nonrated door.

(5) Combustibles Present:

Fire Loading	Total Heat of Combustion (MJ)
Cable Tray	727 MJ/m^2 NCLL (727 MJ/m^2 maximum average) applies.

(6) Detection Provided—Class A supervised POC in the room and manual alarm pull station at Col. 6.2-C.8 and 5.5-B.2.

(7) Suppression Available:

Type	Location/Actuation
Standpipe and hose reel	Col. 6.2-C.8 & 5.5-B.2/Manual
ABC hand extinguishers	Col. 6.2-C.8 & 5.5-B.2/Manual

(8) Fire Protection Design Criteria Employed:

(a) The function is located in a fire area which is separate from the fire areas containing equipment which provide alternate means of performing the safety or shutdown function.

(b) Fire detection and suppression capability is provided and accessible.

(c) Fire stops are provided for cable tray and piping penetrations through rated fire barriers.

(9) Consequences of Fire—The postulated fire assumes the loss of the function. The provisions for core cooling systems backup are defined in Subsection 9A.2.5.

Smoke from a fire will be removed by the normal HVAC System operating in its smoke removal mode.

(10) Consequences of Fire Suppression—Suppression extinguishes the fire. Refer to Section 3.4, "Water Level (Flood) Design", for the drain system.

(11) Design Criteria Used for Protection Against Inadvertent Operation, Careless Operation or Rupture of the Suppression System:

(a) Location of the manual suppression system external to the room

(b) Provision of raised supports for the equipment

(c) Refer to Section 3.4, "Water Level (Flood) Design", for the drain system.

(d) ANSI B31.1 standpipe (rupture unlikely)

(12) Fire Containment or Inhibiting Methods Employed:

(a) The functions are located in a separate fire-resistive enclosure.

(b) The means of fire detection, suppression and alarming are provided and accessible.

(13) Remarks—Pressure Transmitter E22-PT007B (Div. 2) of the High Pressure Core Flooder System is mounted in this room (Div. 1). Section 9A.5, Special Cases provides justification for locating equipment from multiple safety divisions in this room.

9A.4.1.3.8 RIP Panel Room (Rm No. 315)

(1) Fire Area—F3300

(2) Equipment: See Table 9A.6-2

Safety-Related	Provides Core Cooling
No	No

(3) Radioactive Material Present—None that can be released as a result of fire.

(4) Qualifications of Fire Barriers—Floor, the exterior wall common with corridor (R/B clean area for personnel access) leading to the control building, the building exterior wall, the wall common with the Emergency Electrical Room A (Rm 310), the wall common with the stair tower (Rm 316), and the elevator (Rm 317), the wall common with corridor A (Rm 311), and portion of the ceiling which is in common with fire area F4100 on the 12300 mm level serve as fire barriers and are of 3 h fire-resistive concrete construction. The remainder of the ceiling is not rated as it is internal to fire area F3300. 3 h fire rated doors provide access to this room from stair tower, elevator No. 2. There

is also a 3 h fire rated double door which provides access from the corridor (R/B clean area for personnel access) leading to the control building to this room. Room 331 is open to this room.

(5) Combustibles Present:

Fire Loading	Total Heat of Combustion (MJ)
Cable Tray	1454 MJ/m^2 ECLL (1454 MJ/m^2 maximum average) applies.

(6) Detection Provided—Class A supervised POC in the room and manual alarm pull station at Col. 6.6-C.4.

(7) Suppression Available:

Type	Location/Actuation
Standpipe and hose reel	Col. 6.6-C.4/Manual
ABC hand extinguishers	Col. 6.6-C.4/Manual

(8) Fire Protection Design Criteria Employed:

(a) The function is located in a separate fire resistive enclosure.

(b) Fire detection and suppression capability is provided and accessible.

(c) Fire stops are provided for cable tray and piping penetrations through rated fire barriers.

(9) Consequences of Fire—The postulated fire assumes the loss of the function. Loss of function, which is not safety-related, is acceptable.

Smoke from a fire will be removed by the EHVAC(C) system operating in its smoke removal mode.

(10) Consequences of Fire Suppression—Suppression extinguishes the fire. Refer to Section 3.4, “Water Level (Flood) Design”, for the drain system.

(11) Design Criteria Used for Protection Against Inadvertent Operation, Careless Operation or Rupture of the Suppression System:

(a) Location of the manual suppression system in the corridor, external to the rooms containing the majority of the safety-related equipment

(b) Provision of raised supports for the equipment

(c) Refer to Section 3.4, "Water Level (Flood) Design", for the drain system.

(d) ANSI B31.1 standpipe (rupture unlikely)

(12) Fire Containment or Inhibiting Methods Employed:

(a) The functions are located in a separate fire-resistive enclosure.

(b) The means of fire detection, suppression and alarming are provided and accessible.

(13) Remarks—None

9A.4.1.3.9 Stair #2 (Rm No. 316)

(1) Fire Area—F3310

(2) Equipment: See Table 9A.6-2

Safety-Related	Provides Core Cooling
No	No

(3) Radioactive Material Present—None.

(4) Qualifications of Fire Barriers—Walls, floor and ceiling are 3 h fire-resistive concrete construction for personnel protection. The stair tower services the controlled access areas of all floors of the reactor building with the exception of elevation –8200 mm and –1700 mm. There is a 3 hour rated fire-resistive door at each floor elevation. Alternate access is provided by stair No.4, directly across the building.

(5) Combustibles Present—No significant quantities of exposed combustibles.

(6) Detection Provided—Class A supervised POC at each building floor elevation and alarm pull stations external to the stair tower and adjacent to the access door at each building floor elevation.

(7) Suppression Available:

Type	Location/Actuation
Standpipe and hose reel	Adjacent to the stair tower at each building floor/Manual
ABC hand extinguishers	Adjacent to the hose reels/ Manual

(8) Fire Protection Design Criteria Employed:

(a) The tower is located in a separate fire-resistive enclosure.

(b) Alternate access and egress are provided by a separate stair tower/elevator located at a remote location.

(c) Fire detection and suppression capability is provided and accessible.

(9) Consequences of Fire—The postulated fire assumes loss of function of the stair tower. Access to the adjacent elevator and other stair tower/elevator is maintained.

Smoke from a fire will be removed by the normal HVAC System operating in its smoke removal mode.

(10) Consequences of Fire Suppression—Suppression extinguishes the fire.Refer to Section 3.4, “Water Level (Flood) Design”, for the drain system.

(11) Design Criteria Used for Protection Against Inadvertent Operation, Careless Operation or Rupture of the Suppression System:

(a) Location of the manual suppression system external to the room

(b) Refer to Section 3.4, “Water Level (Flood) Design”, for the drain system.

(c) ANSI B31.1 standpipe (rupture unlikely)

(d) Alternate access route provided

(12) Fire Containment or Inhibiting Methods Employed:

(a) The functions are located in a separate fire-resistive enclosure.

(b) The means of fire detection, suppression and alarming are provided and accessible.

(13) Remarks—None

9A.4.1.3.10 Elevator #2 (Rm No. 317)

(1) Fire Area—F3311

(2) Equipment: See Table 9A.6-2

Safety-Related	Provides Core Cooling
No	No

(3) Radioactive Material Present—None.

(4) Qualifications of Fire Barriers—Walls, floor and ceiling are 3 h fire-resistive concrete construction for personnel protection. The elevator shaft services all clean area floors of the reactor building. The elevator doors are not fire rated. A separate 3 h rated fire-resistive door is provided at each elevator landing doorway.

(5) Combustibles Present—No significant quantities of exposed combustibles.

(6) Detection Provided—Class A supervised POC at each building floor elevation and alarm pull stations adjacent to the access door of stair tower at each building floor elevation.

(7) Suppression Available:

Type	Location/Actuation
Standpipe and hose reel	Adjacent to the stair entry at each building floor stair door/Manual
ABC hand extinguishers	Adjacent to the hose reels/Manual

(8) Fire Protection Design Criteria Employed:

(a) The elevator shaft is located in a separate fire-resistive enclosure.

(b) Alternate access and egress are provided by separate stairs/elevator located at a remote location.

(c) Fire detection and suppression capability is provided and accessible.

(9) Consequences of Fire—The postulated fire assumes loss of function of the elevator. Access to the adjacent stair tower and other stair/elevator towers is maintained.

Smoke from a fire will be removed by the normal HVAC System operating in its smoke removal mode.

(10) Consequences of Fire Suppression—Suppression extinguishes the fire. Refer to Section 3.4, "Water Level (Flood) Design", for the drain system.

(11) Design Criteria Used for Protection Against Inadvertent Operation, Careless Operation or Rupture of the Suppression System:

(a) Location of the manual suppression system external to the tower

(b) Refer to Section 3.4, "Water Level (Flood) Design", for the drain system.

(c) ANSI B31.1 standpipe (rupture unlikely)

(d) Alternate access route provided

(12) Fire Containment or Inhibiting Methods Employed:

(a) The functions are located in a separate fire-resistive enclosure.

(b) The means of fire detection, suppression and alarming are provided and accessible.

(13) Remarks—None.

9A.4.1.3.11 Instrument Rack (III) Room (Rm No. 332)

(1) Fire Area—F1300

(2) Equipment: See Table 9A.6-2

Safety-Related	Provides Core Cooling
Yes, D1, D3	Yes, D1, D3

(3) Radioactive Material Present—None that can be released as a result of fire.

(4) Qualifications of Fire Barriers—The wall common with the RPV instrument rack (I) room (Rm 314) serves as a fire barrier between fire areas F1100 and F1300 and is of 3 h fire-resistive concrete construction. The remainder of the walls, the ceiling and the floor are concrete and are not rated as they are internal to fire area F1300. The containment serves as one wall of the room. Access to the room is provided from Corridor C (Rm 335) via a nonrated door.

(5) Combustibles Present:

Fire Loading	Total Heat of Combustion (MJ)
Cable Tray	727 MJ/m^2 NCLL (727 MJ/m^2 maximum average) applies.

(6) Detection Provided—Class A supervised POC in the room and manual alarm pull station at Col. 6.2-C.8 and 5.4-E.9.

(7) Suppression Available:

Type	Location/Actuation
Standpipe and hose reel	Col. 6.2-C.8 & 5.4-E.9/Manual
ABC hand extinguishers	Col. 6.2-C.8 & 5.4-E.9/Manual

(8) Fire Protection Design Criteria Employed:

(a) The function is located in a fire area which is separate from the fire areas containing equipment which provide alternative means of performing the safety or shutdown function.

(b) Fire detection and suppression capability is provided and accessible.

(c) Fire stops are provided for cable tray and piping penetrations through rated fire barriers.

(9) Consequences of Fire—The postulated fire assumes the loss of the function. The provisions for core cooling systems backup are defined in Subsection 9A.2.5.

Smoke from a fire will be removed by normal HVAC System operating in its smoke removal mode.

(10) Consequences of Fire Suppression—Suppression extinguishes the fire. Refer to Section 3.4, “Water Level (Flood) Design”, for the drain system.

(11) Design Criteria Used for Protection Against Inadvertent Operation, Careless Operation or Rupture of the Suppression System:

(a) Location of the manual suppression system external to the room

(b) Provision of raised supports for the equipment

(c) Refer to Section 3.4, "Water Level (Flood) Design", for the drain system.

(d) ANSI B31.1 standpipe (rupture unlikely)

(12) Fire Containment or Inhibiting Methods Employed:

(a) The functions are located in a separate fire-resistive enclosure.

(b) The means of fire detection, suppression and alarming are provided and accessible.

(13) Remarks—Solenoid valve T31-F805A (Div. 1) of the Atmospheric Control System is mounted in this room (Div. 3). Section 9A.5, Special Cases provides justification for locating equipment from multiple safety divisions in this room.

9A.4.1.3.12 Pipe Space C (Rm No. 333)

(1) Fire Area—F1300

(2) Equipment: See Table 9A.6-2

Safety-Related	Provides Core Cooling
Yes, D3	Yes, D3

(3) Radioactive Material Present—None that can be released as a result of fire.

(4) Qualifications of Fire Barriers—The walls, and the ceiling are concrete, and are not rated as they are internal to fire area F1300. The containment serves as one wall of the room. There is a large open ceiling grate leading to the floor above (Rm 330). Access to the room is provided from the valve room below in elevation –1700 mm (Rm 230). There is no concrete floor in this room and is open to the room below (Rm 230).

(5) Combustibles Present:

Fire Loading	Total Heat of Combustion (MJ)
None	727 MJ/m^2 NCLL (727 MJ/m^2 maximum average) applies.

(6) Detection Provided—Class A supervised POC in the room and manual alarm pull station at Col. 6.9-C4 at elevation –1700.

(7) Suppression Available:

Type	Location/Actuation
Standpipe and hose reel	Col. 6.9-C4 at elevation −1700 mm/Manual
ABC hand extinguishers	Col. 6.9-C4 at elevation −1700 mm/Manual

(8) Fire Protection Design Criteria Employed:

(a) The function is located in a fire area which is separate from the fire areas containing equipment which provides alternate means of performing the safety or shutdown function.

(b) Fire detection and suppression capability is provided and accessible.

(9) Consequences of Fire—The postulated fire assumes the loss of the function. The provisions for core cooling systems backup are defined in Subsection 9A.2.5.

Smoke from a fire will be removed by the normal HVAC System operating in its smoke removal mode.

(10) Consequences of Fire Suppression—Suppression extinguishes the fire. Refer to Section 3.4, “Water Level (Flood) Design”, for the drain system.

(11) Design Criteria Used for Protection Against Inadvertent Operation, Careless Operation or Rupture of the Suppression System:

(a) Location of the manual suppression system external to the room

(b) Provision of raised supports for the equipment

(c) Refer to Section 3.4, “Water Level (Flood) Design”, for the drain system.

(d) ANSI B31.1 standpipe (rupture unlikely)

(12) Fire Containment or Inhibiting Methods Employed:

(a) The functions are located in a separate fire-resistive enclosure.

(b) The means of fire detection, suppression and alarming are provided and accessible.

(13) Remarks—None.

9A.4.1.3.13 Corridor C (Rm No. 335)

(1) Fire Area—F1300

(2) Equipment: See Table 9A.6-2

Safety-Related	Provides Core Cooling
Yes, D1, D3	Yes, D1, D3

(3) Radioactive Material Present—None that can be released as a result of fire.

(4) Qualifications of Fire Barriers—The wall common with the emergency electrical room B (Rm 326), the wall common with emergency electrical room C (Rm 337), the wall common with RIP Panel room (Rm 331), and the wall common with corridor B (Rm 321) serve as fire barriers between adjacent fire areas and are of 3 h fire-resistive concrete construction. The remainder of the walls and floor are concrete, and are not rated as they are internal to fire area F1300. The ceiling is in common with fire area F4301 on Level 12300 and is of 3 h fire-resistive concrete construction. The containment serves as one wall of the room. Access to the room is provided directly from the corridor B (Rm No. 321), and corridor A (Rm 311) via 3 h fire-resistive doors. This room provides access to room 330 at elevation 8500 mm via the stairs in this room. A nonrated door separates the stairs from the remainder of the room.

(5) Combustibles Present:

Fire Loading	Total Heat of Combustion (MJ)
Cable Tray	727 MJ/m^2 NCLL (727 MJ/m^2 maximum average) applies.

(6) Detection Provided—Class A supervised POC in the room and manual alarm pull station at Col. 5.4-E.9.

(7) Suppression Available:

Type	Location/Actuation
Standpipe and hose reel	Col. 5.4-E.9/Manual
ABC hand extinguishers	Col. 5.4-E.9/Manual

(8) Fire Protection Design Criteria Employed:

(a) The function is located in a fire area which is separate from the fire areas containing equipment which provides alternate means of performing the safety as shutdown function.

(b) Fire detection and suppression capability is provided and accessible.

(9) Consequences of Fire—The postulated fire assumes the loss of the function. The provisions for core cooling systems backup are defined in Subsection 9A.2.5.

Smoke from a fire will be removed by the normal HVAC System operating in its smoke removal mode.

(10) Consequences of Fire Suppression—Suppression extinguishes the fire. Refer to Section 3.4, "Water Level (Flood) Design", for the drain system.

(11) Design Criteria Used for Protection Against Inadvertent Operation, Careless Operation or Rupture of the Suppression System:

(a) Location of the manual suppression system in the corridor, external to the rooms containing the majority of the safety-related equipment

(b) Provision of raised supports for the equipment

(c) Refer to Section 3.4, "Water Level (Flood) Design", for the drain system.

(d) ANSI B31.1 standpipe (rupture unlikely)

(12) Fire Containment or Inhibiting Methods Employed:

(a) The functions are located in a separate fire-resistive enclosure.

(b) The means of fire detection, suppression and alarming are provided and accessible.

(13) Remarks—MO valves D23-F006A, D23-F007A, and D23-F008A (Div. 1) of the Containment Atmospheric Monitoring System are mounted in this room (Div. 3). Section 9A.5, Special Cases provides justification for locating equipment from multiple safety divisions in this room.

9A.4.1.3.14 Quadrant A Storm Drain Sump Room (Rm No. 336)

(1) Fire Area—F3300

(2) Equipment: See Table 9A.6-2

Safety-Related	Provides Core Cooling
No	No

(3) Radioactive Material Present—None.

(4) Qualifications of Fire Barriers—The wall common with corridor C (Rm335), the wall common with Emergency Electrical Room (Rm337), and the floor are fire barriers and are of 3 h fire resistive concrete construction. The wall common with the RIP Panel room (Rm 331) is concrete and is not rated as it is internal to fire area F3300. The ceiling is in common with fire area F1300 on Level 8800 mm and is of 3 h fire-resistive construction. Access is provided from Room 335 via a nonrated door.

(5) Combustibles Present:

Fire Loading	Total Heat of Combustion (MJ)
None.	727 MJ/m^2 NCLL (727 MJ/m^2 maximum average) applies.

(6) Detection Provided—Class A supervised POC in the room and manual alarm pull stations at Col. 6.9-E.8 in the corridor C.

(7) Suppression Available:

Type	Location/Actuation
Standpipe and hose reel	Col. 6.9-E.8/Manual
ABC hand extinguishers	Col. 6.9-E.8/Manual

(8) Fire Protection Design Criteria Employed:

(a) The function is located in a room, separate from the rooms which contain safety-related systems.

(b) Fire detection and suppression capability is provided and accessible.

(9) Consequences of Fire—The postulated fire assumes the loss of the function for the equipment in the fire area. Loss of Function, which is not safety-related, is acceptable.

Smoke from a fire will be removed by the EHVAC(C) system operating in its smoke removal mode.

(10) Consequences of Fire Suppression—Suppression extinguishes the fire. Refer to Section 3.4, "Water Level (Flood) Design", for the drain system.

(11) Design Criteria Used for Protection Against Inadvertent Operation, Careless Operation or Rupture of the Suppression System:

(a) Location of the manual suppression system external to the room

(b) Refer to Section 3.4, "Water Level (Flood) Design", for the drain system.

(c) ANSI B31.1 standpipe (rupture unlikely)

(12) Fire Containment or Inhibiting Methods Employed:

(a) The functions are located in a separate fire-resistive enclosure.

(b) The means of fire detection, suppression and alarming are provided and accessible.

(13) Remarks—None.

9A.4.1.3.15 RIP Panel Room (Rm No. 331)

(1) Fire Area—F3300

(2) Equipment: See Table 9A.6-2

Safety-Related	Provides Core Cooling
No	No

(3) Radioactive Material Present—None that can be released as a result of fire.

(4) Qualifications of Fire Barriers—Floor, the building exterior walls, the wall common with the Emergency Electrical Room C (Rm 337), the wall common with corridor C (Rm 335), and portion of the ceiling which is in common with fire area F4300 on the 12300 mm level serve as fire barriers and are of 3 h fire-resistive concrete construction. The remainder of the ceiling is not rated as it

is internal to fire area F3300. The wall common with room 316 is not rated as it is internal to fire area F3300. A 3 h fire rated double door provides access to this room from the Emergency Electrical Room C (Rm 337). Access to the room is provided from room 315 via an open direct connection. Also, a non-rated door provides access to room 336 from this room.

(5) Combustibles Present:

Fire Loading	Total Heat of Combustion (MJ)
Cable Tray	1454 MJ/m^2 ECLL (1454 MJ/m^2 maximum average) applies.

(6) Detection Provided—Class A supervised POC in the room and manual alarm pull station at Col. 6.6-C.4 and 6.9-E.8.

(7) Suppression Available:

Type	Location/Actuation
Standpipe and hose reel	Col. 6.6-C.4 & 6.9-E8/Manual
ABC hand extinguishers	Col. 6.6-C.4 & 6.9-E8/Manual

(8) Fire Protection Design Criteria Employed:

(a) The function is located in a separate fire resistive enclosure.

(b) Fire detection and suppression capability is provided and accessible.

(c) Fire stops are provided for cable tray and piping penetrations through rated fire barriers.

(9) Consequences of Fire—The postulated fire assumes the loss of the function. Loss of function, which is not safety-related, is acceptable.

Smoke from a fire will be removed by the EHVAC(C) system operating in its smoke removal mode.

(10) Consequences of Fire Suppression—Suppression extinguishes the fire. Refer to Section 3.4, “Water Level (Flood) Design”, for the drain system.

(11) Design Criteria Used for Protection Against Inadvertent Operation, Careless Operation or Rupture of the Suppression System:

(a) Location of the manual suppression system in the corridor, external to the rooms containing the majority of the safety-related equipment

(b) Provision of raised supports for the equipment

(c) Refer to Section 3.4, "Water Level (Flood) Design", for the drain system.

(d) ANSI B31.1 standpipe (rupture unlikely)

(12) Fire Containment or Inhibiting Methods Employed:

(a) The functions are located in a separate fire-resistive enclosure.

(b) The means of fire detection, suppression and alarming are provided and accessible.

(13) Remarks—None

9A.4.1.3.16 Emergency Electrical Room C (Rm No. 337)

(1) Fire Area—F3301

(2) Equipment: See Table 9A.6-2

Safety-Related	Provides Core Cooling
Yes, D3	Yes, D3

(3) Radioactive Material Present—None.

(4) Qualifications of Fire Barriers—Floor, the building exterior wall, the wall common with the Emergency Electrical Room B (Rm 326), the wall common with corridor C (Rm 335), the wall common with room 316, the wall common with the RIP Panel Room (Rm 331), and the ceiling which is in common with fire areas F4300, F4301, and F4320 on the 12300 level serve as fire barriers and are of 3 h fire-resistive concrete construction. Two 3 h fire rated double doors provide access to this room from the Emergency Electrical Room B (Rm 326), and the RIP Panel Room (Rm 331).

(5) Combustibles Present:

Fire Loading	Total Heat of Combustion (MJ)
Cable Tray	1454 MJ/m^2 ECLL (1454 MJ/m^2 maximum average) applies.

(6) Detection Provided—Class A supervised POC in the room and manual alarm pull station at Col. 6.9-E.8 and 1.9-F.5.

(7) Suppression Available:

Type	Location/Actuation
Standpipe and hose reel with an electrically safe nozzle.	Col. 6.9-E.8 & 1.9-F.5/Manual
ABC hand extinguishers	Col. 6.9-E.8 & 1.9-F.5/Manual

(8) Fire Protection Design Criteria Employed:

(a) The function is located in a fire area which is separate from the fire areas containing equipment which provide alternate means of performing the safety or shutdown function.

(b) Fire detection and suppression capability is provided and accessible.

(c) Fire stops are provided for cable tray and piping penetrations through rated fire barriers.

(9) Consequences of Fire—The postulated fire assumes the loss of the function. The provisions for core cooling systems backup are defined in Subsection 9A.2.5.

Smoke from a fire will be removed by the EHVAC(C) system operating in its smoke removal mode.

(10) Consequences of Fire Suppression—Suppression extinguishes the fire. Refer to Section 3.4, “Water Level (Flood) Design”, for the drain system.

(11) Design Criteria Used for Protection Against Inadvertent Operation, Careless Operation or Rupture of the Suppression System:

(a) Location of the manual suppression system external to the room

(b) Provision of raised supports for the equipment

(c) Refer to Section 3.4, “Water Level (Flood) Design”, for the drain system.

(d) ANSI B31.1 standpipe (rupture unlikely)

(12) Fire Containment or Inhibiting Methods Employed:

(a) The functions are located in a separate fire-resistive enclosure.

(b) The means of fire detection, suppression and alarming are provided and accessible.

(13) Remarks—None

9A.4.1.3.17 Corridor B (Rm No. 321)

(1) Fire Area—F1200

(2) Equipment: See Table 9A.6-2

Safety-Related	Provides Core Cooling
Yes, D2	Yes, D2

(3) Radioactive Material Present—None that can be released as a result of fire.

(4) Qualifications of Fire Barriers—The wall common with the RIP Panel room (Rm 320), the wall common with corridor C (Rm 335), the walls common with stair and elevator towers 3, the wall common with emergency electrical room B (Rm. No. 326) and the ceiling which is in common with fire area F4201 on the 12300 mm level are of 3 h fire-resistive concrete construction. The containment serves as one wall of the room. The remaining walls and the floor are concrete and are not rated as they are internal to fire area F1200. Access to the corridor is provided from corridor D (Rm 344) via an open direct connection, and from stair and elevator tower 3 and corridor C (Rm 335) through a 3 hour fire-resistive double door.

(5) Combustibles Present:

Fire Loading	Total Heat of Combustion (MJ)
Cable Tray	727 MJ/m^2 NCLL (727 MJ/m^2 maximum average) applies.

(6) Detection Provided—Class A supervised POC in the room and manual alarm pull station at Col. 2.4-F.1 and 1.8-B.5.

(7) Suppression Available:

Type	Location/Actuation
Standpipe and hose reel with an electrically safe nozzle.	Col. 2.4-F-1 & 1.8-B.5/Manual
ABC hand extinguishers	Col. 2.4-F-1 & 1.8-B.5/Manual

(8) Fire Protection Design Criteria Employed:

(a) The function is located in a fire area which is separate from the fire areas containing equipment which provides alternate means of performing the safety or shutdown function.

(b) Fire detection and suppression capability is provided and accessible.

(c) Fire stops are provided for cable tray and piping penetrations through rated fire barriers.

(9) Consequences of Fire—The postulated fire assumes the loss of the function. The provisions for core cooling systems backup are defined in Subsection 9A.2.5.

Smoke from a fire will be removed by the normal HVAC System operating in its smoke removal mode.

(10) Consequences of Fire Suppression—Suppression extinguishes the fire. Refer to Section 3.4, “Water Level (Flood) Design”, for the drain system.

(11) Design Criteria Used for Protection Against Inadvertent Operation, Careless Operation or Rupture of the Suppression System:

(a) Location of the manual suppression system in the corridor, external to the rooms containing the majority of the safety-related equipment

(b) Provision of raised supports for the equipment

(c) Refer to Section 3.4, “Water Level (Flood) Design”, for the drain system.

(d) ANSI B31.1 standpipe (rupture unlikely)

(12) Fire Containment or Inhibiting Methods Employed:

(a) The functions are located in a separate fire-resistive enclosure.

(b) The means of fire detection, suppression and alarming are provided and accessible.

(13) Remarks—None

9A.4.1.3.18 Sump Room (Rm No. 322)

(1) Fire Area—F3200

(2) Equipment: See Table 9A.6-2

Safety-Related	Provides Core Cooling
No	No

(3) Radioactive Material Present—None that can be released as a result of fire.

(4) Qualifications of Fire Barriers—The wall common with corridor B (Rm321), the ceiling, and the floor are fire barriers and are of 3 h fire-resistive concrete construction. The wall common with the RIP Panel room (Rm 320) is concrete and is not rated as it is internal to fire area F3200. The ceiling is common to fire area F1200 on the 8800 mm level and is of 3 h fire-resistive concrete construction. Access is provided from room 322 via a non rated door.

(5) Combustibles Present:

Fire Loading	Total Heat of Combustion (MJ)
None	727 MJ/m^2 NCLL (727 MJ/m^2 maximum average) applies.

(6) Detection Provided—Class A supervised POC in the room and manual alarm pull stations at Col. 1.9-F.5 in the Room 320.

(7) Suppression Available:

Type	Location/Actuation
Standpipe and hose reel with an electrically safe nozzle.	Col. 1.9-F.5 & 1.6-C.9/Manual
ABC hand extinguishers	Col. 1.9-F.5 & 1.6-C.9/Manual

(8) Fire Protection Design Criteria Employed:

(a) The function is located in a room, separate from the rooms which contain safety-related systems.

(b) Fire detection and suppression capability is provided and accessible.

(9) Consequences of Fire—The postulated fire assumes the loss of the function for the equipment in the fire area. Loss of function, which is not safety-related, is acceptable.

Smoke from a fire will be removed by the EHVAC(B) system operating in its smoke removal mode.

(10) Consequences of Fire Suppression—Suppression extinguishes the fire. Refer to Section 3.4, "Water Level (Flood) Design", for the drain system.

(11) Design Criteria Used for Protection Against Inadvertent Operation, Careless Operation or Rupture of the Suppression System:

(a) Location of the manual suppression system external to the room

(b) Refer to Section 3.4, "Water Level (Flood) Design", for the drain system.

(c) ANSI B31.1 standpipe (rupture unlikely)

(12) Fire Containment or Inhibiting Methods Employed:

(a) The functions are located in a separate fire-resistive enclosure.

(b) The means of fire detection, suppression and alarming are provided and accessible.

(13) Remarks—None

9A.4.1.3.19 Pipe Space B (Rm No. 324)

(1) Fire Area—F1200

(2) Equipment: See Table 9A.6-2

Safety-Related	Provides Core Cooling
Yes, D2	Yes, D2

(3) Radioactive Material Present—None that can be released as a result of fire.

(4) Qualifications of Fire Barriers—The walls, and the ceiling are concrete, and are not rated as they are internal to fire area F1200. The containment serves as one wall of the room. There is a large open ceiling grate leading to the floor

above (Rm 327). Access to the room is provided from the valve room below in elevation –1700 mm (Rm 222). There is no concrete floor in this room and is open to the room below (Rm 230).

(5) Combustibles Present:

Fire Loading	Total Heat of Combustion (MJ)
None	727 MJ/m^2 NCLL (727 MJ/m^2 maximum average) applies.

(6) Detection Provided—Class A supervised POC in the room and manual alarm pull station at Col. 2.4-E.9 and 1.1-D.0 at elevation –1700 mm.

(7) Suppression Available:

Type	Location/Actuation
Standpipe and hose reel	Col. 2.4-E.9 & 1.1-D.0 at elevation –1700 mm/Manual
ABC hand extinguishers	Col. 2.4-E.9 & 1.1-D.0 at elevation –1700 mm/Manual

(8) Fire Protection Design Criteria Employed:

(a) The function is located in a fire area which is separate from the fire areas containing equipment which provides alternate means of performing the safety or shutdown function.

(b) Fire detection and suppression capability is provided and accessible.

(9) Consequences of Fire—The postulated fire assumes the loss of the function. The provisions for core cooling systems backup are defined in Subsection 9A.2.5.

Smoke from a fire will be removed by the normal HVAC System operating in its smoke removal mode.

(10) Consequences of Fire Suppression—Suppression extinguishes the fire. Refer to Section 3.4, “Water Level (Flood) Design”, for the drain system.

(11) Design Criteria Used for Protection Against Inadvertent Operation, Careless Operation or Rupture of the Suppression System:

(a) Location of the manual suppression system external to the room

(b) Provision of raised supports for the equipment

(c) Refer to Section 3.4, "Water Level (Flood) Design", for the drain system.

(d) ANSI B31.1 standpipe (rupture unlikely)

(12) Fire Containment or Inhibiting Methods Employed:

(a) The functions are located in a separate fire-resistive enclosure.

(b) The means of fire detection, suppression and alarming are provided and accessible.

(13) Remarks—None.

9A.4.1.3.20 RPV Instrument Rack (II) Room (Rm No. 323)

(1) Fire Area—F1200

(2) Equipment: See Table 9A.6-2

Safety-Related	Provides Core Cooling
Yes, D1, D2	Yes, D1, D2

(3) Radioactive Material Present—None that can be released as a result of fire.

(4) Qualifications of Fire Barriers—The wall common with the RPV instrument rack room (IV) (Rm 340) is of 3 h fire-resistive concrete construction. The containment serves as one wall of the room. The remaining walls, the ceiling, and the floor are concrete and are not rated as they are internal to fire area F1200. Access to the room is provided from corridor B (Rm 321) through a nonrated door.

(5) Combustibles Present:

Fire Loading	Total Heat of Combustion (MJ)
Cable Tray	727 MJ/m^2 NCLL (727 MJ/m^2 maximum average) applies.

(6) Detection Provided—Class A supervised POC in the room and manual alarm pull station at Col. 1.8-B.4 and 2.4-F.2.

(7) Suppression Available:

Type	Location/Actuation
Standpipe and hose reel	Col. 1.8-B.4 & 2.4-F.2/Manual
ABC hand extinguishers	Col. 1.8-B.4 & 2.4-F.2/Manual

(8) Fire Protection Design Criteria Employed:

(a) The function is located in a fire area which is separate from the fire areas containing equipment which provides alternate means of performing the safety or shutdown function.

(b) Fire detection and suppression capability is provided and accessible.

(c) Fire stops are provided for cable tray and piping penetrations through rated fire barriers.

(9) Consequences of Fire—The postulated fire assumes the loss of the function. The provisions for core cooling systems backup are defined in Subsection 9A.2.5.

Smoke from a fire will be removed by the normal HVAC System operating in its smoke removal mode.

(10) Consequences of Fire Suppression—Suppression extinguishes the fire. Refer to Section 3.4, “Water Level (Flood) Design”, for the drain system.

(11) Design Criteria Used for Protection Against Inadvertent Operation, Careless Operation or Rupture of the Suppression System:

(a) Location of the manual suppression system external to the room

(b) Provision of raised supports for the equipment

(c) Refer to Section 3.4, “Water Level (Flood) Design”, for the drain system.

(d) ANSI B31.1 standpipe (rupture unlikely)

(12) Fire Containment or Inhibiting Methods Employed:

(a) The functions are located in a separate fire-resistive enclosure.

(b) The means of fire detection, suppression and alarming are provided and accessible.

(13) Remarks—None.

9A.4.1.3.21 Emergency Electrical Room B (Rm No. 326)

(1) Fire Area—F3201

(2) Equipment: See Table 9A.6-2

Safety-Related	Provides Core Cooling
Yes, D2	Yes, D2

(3) Radioactive Material Present—None.

(4) Qualifications of Fire Barriers—The wall common with the emergency electrical room C (Rm 337), the wall common with corridor C (Rm. 335), the wall common with the corridor B (Rm 321), the portion of the wall common with elevator and stair tower 3, the wall common with RIP Panel Room (320), the exterior wall, the floor and the ceiling are of 3 h fire-resistive concrete construction. Two 3 h fire-resistive double doors provide access and egress from the emergency electrical room C (Rm 337) and RIP Panel room (Rm 320). Two piping spaces are entered to this room at elevation 10300 mm to facilitate the FCS piping to the next elevation. The walls of these piping spaces are fire barrier of 3 h fire resistive concrete construction.

(5) Combustibles Present:

Fire Loading	Total Heat of Combustion (MJ)
Cable Tray	1454 MJ/m^2 ECLL (1454 MJ/m^2 maximum average) applies.

(6) Detection Provided—Class A supervised POC in the room and manual alarm pull station at Col. 6.9-E.2 and 1.9-F.5.

(7) Suppression Available:

Type	Location/Actuation
Standpipe and hose reel with an electrically safe nozzle.	Col. 6.9-E.2 & 1.9-F.5/Manual
ABC hand extinguishers	Col. 6.9-E.2 & 1.9-F.5/Manual

(8) Fire Protection Design Criteria Employed:

(a) The function is located in a fire area which is separate from the fire areas containing equipment which provide alternate means of performing the safety or shutdown function.

(b) Fire detection and suppression capability is provided and accessible.

(c) Fire stops are provided for cable tray and piping penetrations through rated fire barriers.

(9) Consequences of Fire—The postulated fire assumes the loss of the function. The provisions for core cooling systems backup are defined in Subsection 9A.2.5

Smoke from a fire will be removed by the EHVAC(B) system operating in its smoke removal mode.

(10) Consequences of Fire Suppression—Suppression extinguishes the fire. Refer to Section 3.4, "Water Level (Flood) Design", for the drain system.

(11) Design Criteria Used for Protection Against Inadvertent Operation, Careless Operation or Rupture of the Suppression System:

(a) Location of the manual suppression system external to the room

(b) Provision of raised supports for the equipment

(c) Refer to Section 3.4, "Water Level (Flood) Design", for the drain system.

(d) ANSI B31.1 standpipe (rupture unlikely)

(12) Fire Containment or Inhibiting Methods Employed:

(a) The functions are located in a separate fire-resistive enclosure.

(b) The means of fire detection, suppression and alarming are provided and accessible.

(13) Remarks—None

9A.4.1.3.22 RIP Panel Room (Rm No. 320)

(1) Fire Area—F3200

(2) Equipment: See Table 9A.6-2

Safety-Related	Provides Core Cooling
No	No

(3) Radioactive Material Present—None that can be released as a result of fire.

(4) Qualifications of Fire Barriers—Floor, the wall common with stair and elevator towers 4 and stair tower 3, the portion of the wall common with the emergency electrical room B (Rm. No. 326), the wall common with corridor B (Rm 321), the exterior walls and a portion of the ceiling in common with fire areas F4200 on elevation 12300 mm serve as fire barriers and are of 3 h fire-resistive concrete construction. The remainder of the ceiling is concrete and is not rated as it is internal to fire area F3200. Access to the room is provided from stair and elevator No.4, the control building via RIP panel room A (Rm. 340) and the emergency electrical equipment room (B) (Rm 326) via 3 h fire-resistive double doors. The room serves as a personnel access and egress route from the south side of the reactor building clean area.

(5) Combustibles Present:

Fire Loading	Total Heat of Combustion (MJ)
Cable Tray	1454 MJ/m^2 ECLL (1454 MJ/m^2 maximum average) applies.

(6) Detection Provided—Class A supervised POC in the room and manual alarm pull station at Col. 1.9-F.5 and 1.6-C.9.

(7) Suppression Available:

Type	Location/Actuation
Standpipe and hose reel	Col. 1.9-F.5 & 1.6-C.9/Manual
ABC hand extinguishers	Col. 1.9-F.5 & 1.6-C.9/Manual

(8) Fire Protection Design Criteria Employed:

(a) The function is located in a separate fire resistive enclosure.

(b) Fire detection and suppression capability is provided and accessible.

(c) Fire stops are provided for cable tray and piping penetrations through rated fire barriers.

(9) Consequences of Fire—The postulated fire assumes the loss of the function. Loss of function, which is not safety-related, is acceptable.

Smoke from a fire will be removed by the EHVAC(B) system operating in its smoke removal mode.

(10) Consequences of Fire Suppression—Suppression extinguishes the fire. Refer to Section 3.4, "Water Level (Flood) Design", for the drain system.

(11) Design Criteria Used for Protection Against Inadvertent Operation, Careless Operation or Rupture of the Suppression System:

(a) Location of the manual suppression system in the corridor, external to the rooms containing the majority of the safety-related equipment

(b) Provision of raised supports for the equipment

(c) Refer to Section 3.4, "Water Level (Flood) Design", for the drain system.

(d) ANSI B31.1 standpipe (rupture unlikely)

(12) Fire Containment or Inhibiting Methods Employed:

(a) The functions are located in a separate fire-resistive enclosure.

(b) The means of fire detection, suppression and alarming are provided and accessible.

(13) Remarks—The division 2 cabling from the emergency electrical room (Rm 321) is routed through floor of this room.

9A.4.1.3.23 Stair #4 (Rm No. 329)

(1) Fire Area—F3210

(2) Equipment: See Table 9A.6-2

Safety-Related	Provides Core Cooling
No	No

(3) Radioactive Material Present—None.

(4) Qualifications of Fire Barriers—Walls, floor and ceiling are of 3 h fire-resistive concrete construction for personnel protection. The stair tower services the clean areas of all floors of the reactor building. There is a 3 hour rated fire resistive door at each floor elevation. Alternate access is provided by stair No.2, directly across the building.

(5) Combustibles Present—No significant quantities of exposed combustibles.

(6) Detection Provided—Class A supervised POC at each building floor elevation and alarm pull stations external to the stair tower and adjacent to the access door at each building floor elevation.

(7) Suppression Available:

Type	Location/Actuation
Standpipe and hose reel	Adjacent to the stair tower at each building floor/Manual
ABC hand extinguishers	Adjacent to the hose reels/Manual

(8) Fire Protection Design Criteria Employed:

(a) The tower is located in a separate fire-resistive enclosure.

(b) Alternate access and egress are provided by a separate stair tower located at a remote location.

(c) Fire detection and suppression capability is provided and accessible.

(9) Consequences of Fire—The postulated fire assumes loss of function of the stair tower. Access to the other stair tower is maintained.

Smoke from a fire will be removed by the normal HVAC System operating in its smoke removal mode.

(10) Consequences of Fire Suppression—Suppression extinguishes the fire.Refer to Section 3.4, “Water Level (Flood) Design”, for the drain system.

(11) Design Criteria Used for Protection Against Inadvertent Operation, Careless Operation or Rupture of the Suppression System:

(a) Location of the manual suppression system external to the room

(b) Refer to Section 3.4, “Water Level (Flood) Design”, for the drain system.

(c) ANSI B31.1 standpipe (rupture unlikely)

(d) Alternate access route provided

(12) Fire Containment or Inhibiting Methods Employed:

(a) The functions are located in a separate fire-resistive enclosure.

(b) The means of fire detection, suppression and alarming are provided and accessible.

(13) Remarks—None

9A.4.1.3.24 Elevator #4 (Rm No. 328)

(1) Fire Area—F3211

(2) Equipment: See Table 9A.6-2

Safety-Related	Provides Core Cooling
No	No

(3) Radioactive Material Present—None.

(4) Qualifications of Fire Barriers—Walls, floor and ceiling are of 3 h fire-resistive concrete construction for personnel protection. The elevator shaft services all clean area floors of the reactor building. The elevator doors are not fire rated. A separate 3 h fire-resistive door is provided at each elevator landing doorway.

(5) Combustibles Present—No significant quantities of exposed combustibles.

(6) Detection Provided—Class A supervised POC at each building floor elevation and alarm pull stations adjacent to the access door at each building floor elevation.

(7) Suppression Available:

Type	Location/Actuation
Standpipe and hose reel	Adjacent to the stair entry at each building floor stair door/Manual
ABC hand extinguishers	Adjacent to the hose reels/Manual

(8) Fire Protection Design Criteria Employed:

(a) The elevator shaft is located in a separate fire-resistive enclosure.

(b) Alternate access and egress are provided by separate stairs located at a remote location.

(c) Fire detection and suppression capability is provided and accessible.

(9) Consequences of Fire—The postulated fire assumes loss of function of the elevator. Access to the adjacent stair tower and other stair/elevator towers is maintained.

Smoke from a fire will be removed by the normal HVAC System operating in its smoke removal mode.

(10) Consequences of Fire Suppression—Suppression extinguishes the fire. Refer to Section 3.4, "Water Level (Flood) Design", for the drain system.

(11) Design Criteria Used for Protection Against Inadvertent Operation, Careless Operation or Rupture of the Suppression System:

(a) Location of the manual suppression system external to the tower

(b) Refer to Section 3.4, "Water Level (Flood) Design", for the drain system.

(c) ANSI B31.1 standpipe (rupture unlikely)

(d) Alternate access route provided

(12) Fire Containment or Inhibiting Methods Employed:

(a) The functions are located in a separate fire-resistive enclosure.

(b) The means of fire detection, suppression and alarming are provided and accessible.

(13) Remarks—None

9A.4.1.3.25 RPV Instrument Rack (IV) Room (Rm No. 345)

(1) Fire Area—F3400

(2) Equipment: See Table 9A.6-2

Safety-Related	Provides Core Cooling
Yes, D4	Yes, D4

(3) Radioactive Material Present—None that can be released as a result of fire.

(4) Qualifications of Fire Barriers—The containment serves as one wall of the room. The remainder of the walls, a portion of the ceiling and the floor are fire barriers and are of 3 h fire-resistive concrete construction. The remainder of the ceiling is not fire rated as it is internal to fire area F3400. Access to the room is provided from corridor D (Rm. 344) via a 3 hour fire-resistive door.

This is a division 4 room sitting within a division 2 fire area (F1200). Electrical cables for equipment in the room are routed to the room through conduit embedded in the floor and walls of the reactor building. This provides the equivalent of 3 hours of separation of the division 4 cables from areas containing cables from other divisions.

(5) Combustibles Present:

Fire Loading	Total Heat of Combustion (MJ)
Cable Tray	727 MJ/m^2 NCLL (727 MJ/m^2 maximum average) applies.

(6) Detection Provided—Class A supervised POC in the room and manual alarm pull station at Col. 1.8-B.5 and 2.4-F.2.

(7) Suppression Available:

Type	Location/Actuation
Standpipe and hose reel	Col. 1.8-B.5 & 2.4-F.2/Manual
ABC hand extinguishers	Col. 1.8-B.5 & 2.4-F.2/Manual

(8) Fire Protection Design Criteria Employed:

(a) The function is located in a fire area which is separate from the fire areas containing equipment which provides alternate means of performing the safety or shutdown function.

(b) Fire detection and suppression capability is provided and accessible.

(c) Fire stops are provided for cable tray and piping penetrations through rated fire barriers.

(9) Consequences of Fire—The postulated fire assumes the loss of the function. The provisions for core cooling systems backup are defined in Subsection 9A.2.5.

Smoke from a fire will be removed by the normal HVAC System operating in its smoke removal mode.

(10) Consequences of Fire Suppression—Suppression extinguishes the fire. Refer to Section 3.4, “Water Level (Flood) Design”, for the drain system.

(11) Design Criteria Used for Protection Against Inadvertent Operation, Careless Operation or Rupture of the Suppression System:

(a) Location of the manual suppression system external to the room

(b) Provision of raised supports for the equipment

(c) Refer to Section 3.4, "Water Level (Flood) Design", for the drain system.

(d) ANSI B31.1 standpipe (rupture unlikely)

(12) Fire Containment or Inhibiting Methods Employed:

(a) The functions are located in a separate fire-resistive enclosure.

(b) The means of fire detection, suppression and alarming are provided and accessible.

(13) Remarks—None.

9A.4.1.3.26 Not Used

9A.4.1.3.27 Corridor D (Rm No. 344)

(1) Fire Area—F1200

(2) Equipment: See Table 9A.6-2

Safety-Related	Provides Core Cooling
Yes, D2	Yes, D2

(3) Radioactive Material Present—None that can be released as a result of fire.

(4) Qualifications of Fire Barriers—The wall common with RPV instrument rack IV room (Rm345), The wall common with RIP Panel room (Rm 340), The wall common with Remote Shutdown Panel Rooms (RM 341 and Rm 383), The wall common with division 4 Remote Multiplexing unit room (Rm 381) and portion of the wall common with Emergency Electrical Room A (Rm 310), the wall common with room 342, and portion of the ceiling which is in common with fire area F3400 on the 8500 mm level are fire barriers and are of 3 h fire-resistive concrete construction. Primary containment acts as one wall of the room. The remainder of the walls, the remainder of the ceiling, and the floor are concrete and are not rated as they are internal to fire area F1200. Access to the corridor is provided from corridor B (Rm. No. 321) via an open direct connection, and from room 342 via a 3 hour fire-resistive door.

(5) Combustibles Present:

Fire Loading	Total Heat of Combustion (MJ)
Cable Tray	727 MJ/m^2 NCLL (727 MJ/m^2 maximum average) applies.

(6) Detection Provided—Class A supervised POC in the room and manual alarm pull station at Col. 1.8-B.5.

(7) Suppression Available:

Type	Location/Actuation
Standpipe and hose reel	Col. 1.8-B.5/Manual
ABC hand extinguishers	Col. 1.8-B.5/Manual

(8) Fire Protection Design Criteria Employed:

(a) The function is located in a fire area which is separate from the fire areas containing equipment which provides alternate means of performing the safety or shutdown function.

(b) Fire detection and suppression capability is provided and accessible.

(c) Fire stops are provided for cable tray and piping penetrations through rated fire barriers.

(9) Consequences of Fire—The postulated fire assumes the loss of the function. Alternate access routes are provided.

Smoke from a fire will be removed by the normal HVAC System operating in its smoke removal mode.

(10) Consequences of Fire Suppression—Suppression extinguishes the fire. Refer to Section 3.4, “Water Level (Flood) Design”, for the drain system.

(11) Design Criteria Used for Protection Against Inadvertent Operation, Careless Operation or Rupture of the Suppression System:

(a) Location of the manual suppression system in the corridor, external to the rooms containing the majority of the safety-related equipment

(b) Provision of raised supports for the equipment

(c) Refer to Section 3.4, "Water Level (Flood) Design", for the drain system.

(d) ANSI B31.1 standpipe (rupture unlikely)

(12) Fire Containment or Inhibiting Methods Employed:

(a) The functions are located in a separate fire-resistive enclosure.

(b) The means of fire detection, suppression and alarming are provided and accessible.

(13) Remarks—None

9A.4.1.3.28 RIP Panel A Room (Rm No. 340)

(1) Fire Area—F3200

(2) Equipment: See Table 9A.6-2

Safety-Related	Provides Core Cooling
No	No

(3) Radioactive Material Present—None that can be released as a result of fire.

(4) Qualifications of Fire Barriers—Floor, the building exterior wall, the wall common with Remote Shutdown Panel Room A (Rm 341), the wall common with division 4 Remote multiplexing Unit (Rm 381), the wall common with corridor D (Rm 344), The wall common with elevator No.4, and portion of the ceiling which is common to fire area F4201 are of 3 h fire-resistive concrete construction. The remaining walls, and the remainder of ceiling are concrete and are not rated as they are internal to fire area F3200. Access to the room is provided via a 3 h fire-resistive double door from the corridor (R/B clean area) leading to control building, and via a direct opening from room 320.

(5) Combustibles Present:

Fire Loading	Total Heat of Combustion (MJ)
Cable Tray	1454 MJ/m^2 ECLL (1454 MJ/m^2 maximum average) applies.

(6) Detection Provided—Class A supervised POC in the room and manual alarm pull station at Col. 1.6-C.9.

(7) Suppression Available:

Type	Location/Actuation
Standpipe and hose reel	Col. 1.6-C.9/Manual
ABC hand extinguishers	Col. 1.6-C.9/Manual

(8) Fire Protection Design Criteria Employed:

(a) The function is located in a separate fire resistive enclosure.

(b) Fire detection and suppression capability is provided and accessible.

(c) Fire stops are provided for cable tray and piping penetrations through rated fire barriers.

(9) Consequences of Fire—The postulated fire assumes the loss of the function. Loss of function, which is not safety-related, is acceptable.

Smoke from a fire will be removed by the EHVAC(B) system operating in its smoke removal mode.

(10) Consequences of Fire Suppression—Suppression extinguishes the fire. Refer to Section 3.4, “Water Level (Flood) Design”, for the drain system.

(11) Design Criteria Used for Protection Against Inadvertent Operation, Careless Operation or Rupture of the Suppression System:

(a) Location of the manual suppression system in the corridor, external to the rooms containing the majority of the safety-related equipment

(b) Provision of raised supports for the equipment

(c) Refer to Section 3.4, “Water Level (Flood) Design”, for the drain system.

(d) ANSI B31.1 standpipe (rupture unlikely)

(12) Fire Containment or Inhibiting Methods Employed:

(a) The functions are located in a separate fire-resistive enclosure.

(b) The means of fire detection, suppression and alarming are provided and accessible.

(13) Remarks—None

9A.4.1.3.29 Remote Shutdown Panel Room B. (Rm No. 383)

(1) Fire Area—F3200

(2) Equipment: See Table 9A.6-2

Safety-Related	Provides Core Cooling
Yes, D2	Yes, D2

(3) Radioactive Material Present—None.

(4) Qualifications of Fire Barriers—The building exterior wall, the wall common with the remote shutdown panel room A (Rm 341), the floor, and the ceiling are 3 h fire-resistive concrete construction. A 3 h fire-resistive sliding door provides access to this room from the remote shutdown panel room A (Rm 341). The normally closed sliding door will be open when operating from the remote shutdown panel. Access to the room is also provided via a nonrated door.

(5) Combustibles Present:

Fire Loading	Total Heat of Combustion (MJ)
Cable Tray	727 MJ/m^2 NCLL (727 MJ/m^2 maximum average) applies.

(6) Detection Provided—Class A supervised POC in the room and manual alarm pull station outside the room in the corridor (R/B clean area) leading to control building, and Col. 1.6-D.0.

(7) Suppression Available:

Type	Location/Actuation
Standpipe and hose reel	Outside the room in the corridor (R/B clean area) leading to the control building, and col. 1.6-D.0/Manual
ABC hand extinguishers	Outside the room in the corridor (R/B clean area) leading to the control building, and col. 1.6-D.0/Manual

(8) Fire Protection Design Criteria Employed:

(a) The function is located in a fire area which is separate from the fire areas containing equipment which provide alternate means of performing the safety or shutdown function.

(b) Fire detection and suppression capability is provided and accessible.

(c) Fire stops are provided for cable tray and piping penetrations through rated fire barriers.

(9) Consequences of Fire—The postulated fire assumes the loss of the function. The provisions for core cooling systems backup are defined in Subsection 9A.2.5.

Smoke from a fire will be removed by the EHVAC(B) system operating in its smoke removal mode.

(10) Consequences of Fire Suppression—Suppression extinguishes the fire. Refer to Section 3.4, "Water Level (Flood) Design", for the drain system.

(11) Design Criteria Used for Protection Against Inadvertent Operation, Careless Operation or Rupture of the Suppression System:

(a) Location of the manual suppression system external to the room

(b) Provision of raised supports for the equipment

(c) Refer to Section 3.4, "Water Level (Flood) Design", for the drain system.

(d) ANSI B31.1 standpipe (rupture unlikely)

(12) Fire Containment or Inhibiting Methods Employed:

(a) The functions are located in a separate fire-resistive enclosure.

(b) The means of fire detection, suppression and alarming are provided and accessible.

(13) Remarks—None

9A.4.1.3.30 Remote Shutdown Panel Room A. (Rm No. 341)

(1) Fire Area—F3101

(2) Equipment: See Table 9A.6-2

Safety-Related	Provides Core Cooling
Yes, D1	Yes, D1

(3) Radioactive Material Present—None.

(4) Qualifications of Fire Barriers—The building exterior walls, the wall common with remote shutdown panel room B (Rm 383), the wall common with the RIP Panel room A (Rm 340), the ceiling, and the floor are 3 h fire-resistive concrete construction. A 3 h fire-resistive curbed door provides access to this room from the RIP Panel room A (Rm 340). There is a 3 h fire-resistive sliding door which provides direct access to the remote shutdown panel room B (Rm 383). The normally closed siding door would be open during operation from the remote shutdown panel.

(5) Combustibles Present:

Fire Loading	Total Heat of Combustion (MJ)
Cable Tray	727 MJ/m^2 NCLL (727 MJ/m^2 maximum average) applies.

(6) Detection Provided—Class A supervised POC in the room and manual alarm pull station outside the room in the corridor (R/B clean area) leading to control building, and col. 1.6-D.0.

(7) Suppression Available:

Type	Location/Actuation
Standpipe and hose reel with an electrically safe nozzle.	Outside the room in the corridor (R/B clean area) leading to the control building, col. 1.6-D.0/Manual
ABC hand extinguishers	Outside the room in the corridor (R/B clean area) leading to the control building, col. 1.6-D.0/Manual

(8) Fire Protection Design Criteria Employed:

(a) The function is located in a fire area which is separate from the fire areas containing equipment which provide alternate means of performing the safety or shutdown function.

(b) Fire detection and suppression capability is provided and accessible.

(c) Fire stops are provided for cable tray and piping penetrations through rated fire barriers.

(9) Consequences of Fire—The postulated fire assumes the loss of the function. The provisions for core cooling systems backup are defined in Subsection 9A.2.5.

Smoke from a fire will be removed by the EHVAC(A) system operating in its smoke removal mode.

(10) Consequences of Fire Suppression—Suppression extinguishes the fire. Refer to Section 3.4, "Water Level (Flood) Design", for the drain system.

(11) Design Criteria Used for Protection Against Inadvertent Operation, Careless Operation or Rupture of the Suppression System:

(a) Location of the manual suppression system external to the room

(b) Provision of raised supports for the equipment

(c) Refer to Section 3.4, "Water Level (Flood) Design", for the drain system.

(d) ANSI B31.1 standpipe (rupture unlikely)

(12) Fire Containment or Inhibiting Methods Employed:

(a) The functions are located in a separate fire-resistive enclosure.

(b) The means of fire detection, suppression and alarming are provided and accessible.

(13) Remarks—None

9A.4.1.3.31 Corridor A Extension (Rm No. 342)

(1) Fire Area—F1100

(2) Equipment: See Table 9A.6-2

Safety-Related	Provides Core Cooling
Yes, D1	Yes, D1

(3) Radioactive Material Present—None.

(4) Qualifications of Fire Barriers—The wall common with Emergency Electrical Room A (Rm 310), The wall common with corridor D (Rm 344), the wall common with CUW filter demineralizer area (Rm 347), a portion of the floor and the ceiling are of 3 h fire-resistive concrete construction. Access is provided via direct opening through corridor A (Rm. 311) and via a 3 h rated door from Corridor D (Rm 344). The remainder of floor is not rated as it is internal to fire area F1100.

(5) Combustibles Present:

Fire Loading	Total Heat of Combustion (MJ)
Cable Tray	727 MJ/m^2 NCLL (727 MJ/m^2 maximum average) applies.

(6) Detection Provided—Class A supervised POC in the room and manual alarm pull station at Col. 5.5-B.2 and 1.8-B.5.

(7) Suppression Available:

Type	Location/Actuation
Standpipe and hose reel with an electrically safe nozzle	Col. 5.5-B.2 & 1.8-B.5/Manual
ABC hand extinguishers	Col. 5.5-B.2 & 1.8-B.5/Manual

(8) Fire Protection Design Criteria Employed:

(a) The function is located in a fire area which is separate from the fire areas containing equipment which provide alternate means of performing the safety or shutdown function.

(b) Fire detection and suppression capability is provided and accessible.

(c) Fire stops are provided for cable tray and piping penetrations through rated fire barriers.

(9) Consequences of Fire—The postulated fire assumes the loss of the function. The provisions for core cooling systems backup are defined in Subsection 9A.2.5.

Smoke from a fire will be removed by the normal HVAC System operating in its smoke removal mode.

(10) Consequences of Fire Suppression—Suppression extinguishes the fire. Refer to Section 3.4, "Water Level (Flood) Design", for the drain system.

(11) Design Criteria Used for Protection Against Inadvertent Operation, Careless Operation or Rupture of the Suppression System:

(a) Location of the manual suppression system external to the room

(b) Provision for drainage of water into the sumps

(c) Refer to Section 3.4, "Water Level (Flood) Design", for the drain system.

(d) ANSI B31.1 standpipe (rupture unlikely)

(12) Fire Containment or Inhibiting Methods Employed:

(a) The functions are located in a separate fire-resistive enclosure.

(b) The means of fire detection, suppression and alarming are provided and accessible.

(13) Remarks—None

9A.4.1.3.32 Pipe Space (Rm No. 318)

(1) Fire Area—F1100

(2) Equipment: See Table 9A.6-2

Safety-Related	Provides Core Cooling
Yes, D1, D2	Yes, D1, D2

(3) Radioactive Material Present—None that can be released as a result of fire.

(4) Qualifications of Fire Barriers—The wall common with the CUW filter demineralizer area (Rm 347), the wall common with Emergency Electrical Room A (Rm 310), the wall common with elevator and stair tower #1 (Rm 192 and 292) the wall common with RIP Panel Room (Rm 315), the wall common with Pipe Space area (Rm 330), and the ceiling which is common to fire areas F4900, and F4101 of 12300 mm level are of 3 h fire-resistive concrete construction. The remainder of the walls and the floor are concrete and are not rated as they are internal to fire area F1100. The containment serves as a

portion of one wall of the room. Access to the room is provided from pipe space (A) (Rm 313) at elevation 4800 mm via a stairway to a grating floor at elevation 8500 mm.

(5) Combustibles Present:

Fire Loading	Total Heat of Combustion (MJ)
Cable Tray	727 MJ/m^2 NCLL (727 MJ/m^2 maximum average) applies.

(6) Detection Provided—Class A supervised POC in the room and manual alarm pull stations at Col. 5.5-B.2.

(7) Suppression Available:

Type	Location/Actuation
Standpipe and hose reel	Col. 5.5-B.2 & 6.2-C.8 at El 4800 mm/Manual
ABC hand extinguishers	Col. 5.5-B.2 & 6.2-C.8 at El 4800 mm/Manual

(8) Fire Protection Design Criteria Employed:

(a) The function is located in a fire area which is separate from the fire areas containing equipment which provides alternate means of performing the safety or shutdown function.

(b) Fire detection and suppression capability is provided and accessible.

(c) Fire stops are provided for cable tray and piping penetrations through rated fire barriers.

(9) Consequences of Fire—The postulated fire assumes the loss of the function. The provisions for core cooling systems backup are defined in Subsection 9A.2.5.

Smoke from a fire will be removed by the normal HVAC System operating in its smoke removal mode.

(10) Consequences of Fire Suppression—Suppression extinguishes the fire. Refer to Section 3.4, “Water Level (Flood) Design”, for the drain system.

(11) Design Criteria Used for Protection Against Inadvertent Operation, Careless Operation or Rupture of the Suppression System:

(a) Location of the manual suppression system in the corridor, external to the rooms containing the majority of the safety-related equipment

(b) Provision of raised supports for the equipment

(c) Refer to Section 3.4, "Water Level (Flood) Design", for the drain system.

(d) ANSI B31.1 standpipe (rupture unlikely)

(12) Fire Containment or Inhibiting Methods Employed:

(a) The functions are located in a separate fire-resistive enclosure.

(b) The means of fire detection, suppression and alarming are provided and accessible.

(13) Remarks—AO valves T31-F003, E31-F004 (Div. 2) of the Atmospheric Control System, and Leak Detection System respectively are mounted in this room (Div. 1). Section 9A.5, Special Cases provides justification for locating equipment from multiple safety divisions in this room.

9A.4.1.3.33 Pipe Space Room (Rm No. 330)

(1) Fire Area—F1300

(2) Equipment: See Table 9A.6-2

Safety-Related	Provides Core Cooling
Yes, D3	Yes, D3

(3) Radioactive Material Present—None that can be released as a result of fire.

(4) Qualifications of Fire Barriers—The wall common with RIP Panel area (Rm 331), and the wall common with the FPC pipe space room (Rm 318) are fire barriers of 3 h fire-resistive concrete construction. The containment serves as one wall of the room. The remaining walls, the ceiling and the floor are concrete and are not rated as they are internal to fire area F1300. Access to the room is provided from corridor C (Rm 335) (El 4800 mm) via the stairs.

(5) Combustibles Present:

Fire Loading	Total Heat of Combustion (MJ)
Cable Tray	727 MJ/m^2 NCLL (727 MJ/m^2 maximum average) applies.

(6) Detection Provided—Class A supervised POC in the room and manual alarm pull station at Col. 5.4-E.9 at El 4800 mm.

(7) Suppression Available:

Type	Location/Actuation
Standpipe and hose reel	Col. 5.4.-E.9 at EL 4800 mm/Manual
ABC hand extinguishers	Col. 5.4.-E.9 at EL 4800 mm/Manual

(8) Fire Protection Design Criteria Employed:

(a) The function is located in a fire area which is separate from the fire areas containing equipment which provides alternate means of performing the safety or shutdown function.

(b) Fire detection and suppression capability is provided and accessible.

(c) Fire stops are provided for cable tray and piping penetrations through rated fire barriers.

(9) Consequences of Fire—The postulated fire assumes the loss of the function. The provisions for core cooling systems backup are defined in Subsection 9A.2.5.

Smoke from a fire will be removed by the normal HVAC System operating in its smoke removal mode.

(10) Consequences of Fire Suppression—Suppression extinguishes the fire. Refer to Section 3.4, “Water Level (Flood) Design”, for the drain system.

(11) Design Criteria Used for Protection Against Inadvertent Operation, Careless Operation or Rupture of the Suppression System:

(a) Location of the manual suppression system external to the room

(b) Provision of raised supports for the equipment

(c) Refer to Section 3.4, "Water Level (Flood) Design", for the drain system.

(d) ANSI B31.1 standpipe (rupture unlikely)

(12) Fire Containment or Inhibiting Methods Employed:

(a) The functions are located in a separate fire-resistive enclosure.

(b) The means of fire detection, suppression and alarming are provided and accessible.

(13) Remarks—None

9A.4.1.3.34 Penetration Room (Rm No. 325)

(1) Fire Area—F1200

(2) Equipment: See Table 9A.6-2

Safety-Related	Provides Core Cooling
Yes, D2	Yes, D2

(3) Radioactive Material Present—None that can be released as a result of fire.

(4) Qualifications of Fire Barriers—The containment serves as one wall of the room. Portion of the ceiling which is common to fire area F4201 of 12300 mm level is of 3 h fire resistive concrete construction. The walls, the remainder of ceiling and the floor are concrete and are not rated as they are internal to fire area F1200. Access to the room is provided from room corridor B (Rm 321) (El 4800 mm) via the stairs.

(5) Combustibles Present:

Fire Loading	Total Heat of Combustion (MJ)
None	727 MJ/m^2 NCLL (727 MJ/m^2 maximum average) applies.

(6) Detection Provided—Class A supervised POC in the room and manual alarm pull station at Col. 2.4-F.1 at El 4800 mm.

(7) Suppression Available:

Type	Location/Actuation
Standpipe and hose reel	Col. 2.4-F.1 at EL 4800 mm/ Manual
ABC hand extinguishers	Col. 2.4-F.1 at EL 4800 mm/ Manual

(8) Fire Protection Design Criteria Employed:

(a) The function is located in a fire area which is separate from the fire areas containing equipment which provides alternate means of performing the safety or shutdown function.

(b) Fire detection and suppression capability is provided and accessible.

(c) Fire stops are provided for cable tray and piping penetrations through rated fire barriers.

(9) Consequences of Fire—The postulated fire assumes the loss of the function. The provisions for core cooling systems backup are defined in Subsection 9A.2.5.

Smoke from a fire will be removed by the normal HVAC System operating in its smoke removal mode.

(10) Consequences of Fire Suppression—Suppression extinguishes the fire. Refer to Section 3.4, “Water Level (Flood) Design”, for the drain system.

(11) Design Criteria Used for Protection Against Inadvertent Operation, Careless Operation or Rupture of the Suppression System:

(a) Location of the manual suppression system external to the room

(b) Provision of raised supports for the equipment

(c) Refer to Section 3.4, “Water Level (Flood) Design”, for the drain system.

(d) ANSI B31.1 standpipe (rupture unlikely)

(12) Fire Containment or Inhibiting Methods Employed:

(a) The functions are located in a separate fire-resistive enclosure.

(b) The means of fire detection, suppression and alarming are provided and accessible.

(13) Remarks—None

9A.4.1.3.35 Valve Room B, and Pipe Space B (Rm No. 327/348)

(1) Fire Area—F1200

(2) Equipment: See Table 9A.6-2

Safety-Related	Provides Core Cooling
No	No

(3) Radioactive Material Present—None that can be released as a result of fire.

(4) Qualifications of Fire Barriers—The wall common with RIP Panel rooms (Rm 320 and 340), the wall common with Emergency Electrical Room A (Rm 310), the wall common with Reactor Water Sampling Rack (Rm 380), portion of the floor over the Emergency Electrical Room "A" at elevation 10500 mm, and the floor area over room 342, and the ceiling which is common to fire areas F4201 of 12300 mm level are of 3 h fire-resistive concrete construction. The remaining walls and the floor are concrete and are not rated as they are internal to fire area F1200. Access to the room is provided from the stairs via room 325 grating floor.

(5) Combustibles Present:

Fire Loading	Total Heat of Combustion (MJ)
None	727 MJ/m^2 NCLL (727 MJ/m^2 maximum average) applies.

(6) Detection Provided—Class A supervised POC in the room and manual alarm pull station at Col. 2.5-F.0 at El 4800 mm, and Col. 5.5-B.2.

(7) Suppression Available:

Type	Location/Actuation
Standpipe and hose reel	Col. 5.5-B.2, and Col. 2.5-F.0 at El 4800 mm/Manual
ABC hand extinguishers	Col. 5.5-B.2, and Col. 2.5-F.0 at El 4800 mm/Manual

(8) Fire Protection Design Criteria Employed:

(a) The function is located in a fire area which is separate from the fire areas containing equipment which provides alternate means of performing the safety or shutdown function.

(b) Fire detection and suppression capability is provided and accessible.

(c) Fire stops are provided for cable tray and piping penetrations through rated fire barriers.

(9) Consequences of Fire—The postulated fire assumes the loss of the function. Alternate functions are provided in other fire areas.

Smoke from a fire would be removed by the normal HVAC System, if it is not isolated. If the normal HVAC System is isolated, smoke removal is by the SGTS system.

(10) Consequences of Fire Suppression—Suppression extinguishes the fire. Refer to Section 3.4, "Water Level (Flood) Design", for the drain system.

(11) Design Criteria Used for Protection Against Inadvertent Operation, Careless Operation or Rupture of the Suppression System:

(a) Location of the manual suppression system external to the corridor, external to the rooms containing the majority of the safety-related equipment

(b) Provision of raised supports for the equipment

(c) Refer to Section 3.4, "Water Level (Flood) Design", for the drain system.

(d) ANSI B31.1 standpipe (rupture unlikely)

(12) Fire Containment or Inhibiting Methods Employed:

(a) The functions are located in a separate fire-resistive enclosure.

(b) The means of fire detection, suppression and alarming are provided and accessible.

(13) Remarks—None.

9A.4.1.3.36 Reactor Water Sampling Rack Room (Rm No. 349)

(1) Fire Area—F1200

(2) Equipment: See Table 9A.6-2

Safety-Related	Provides Core Cooling
No	No

(3) Radioactive Material Present—None that can be released as a result of fire.

(4) Qualifications of Fire Barriers—The walls, and floor are concrete but are not fire rated as they are internal to fire area F1200. The containment serves as one wall of the room. The ceiling is fire barrier of 3 h fire resistive concrete construction. Access and egress from the room is provided through a non rated door to corridor D (Rm 344) via the stairs.

(5) Combustibles Present:

Fire Loading	Total Heat of Combustion (MJ)
None	727 MJ/m^2 NCLL (727 MJ/m^2 maximum average) applies.

(6) Detection Provided—Class A supervised POC in the room and manual alarm pull station at Col. 1.8-B.5 at El. 4800 mm.

(7) Suppression Available:

Type	Location/Actuation
Standpipe and hose reel	Col. 1.8-B.5 at El 4800 mm/ Manual
ABC hand extinguishers	Col. 1.8-B.5 at El 4800 mm/ Manual

(8) Fire Protection Design Criteria Employed:

(a) The function is located in a separate concrete enclosure.

(b) Fire detection and suppression capability is provided and accessible.

(c) Fire stops are provided for cable tray and piping penetrations through rated fire barriers.

(9) Consequences of Fire—The postulated fire assumes the loss of the function. Loss of function, which is not safety-related, is acceptable.

(10) Consequences of Fire Suppression—Suppression extinguishes the fire. Refer to Section 3.4, "Water Level (Flood) Design", for the drain system.

(11) Design Criteria Used for Protection Against Inadvertent Operation, Careless Operation or Rupture of the Suppression System:

(a) Location of the manual suppression system external to the room

(b) Provision of raised supports for the equipment

(c) Refer to Section 3.4, "Water Level (Flood) Design", for the drain system.

(d) ANSI B31.1 standpipe (rupture unlikely)

(12) Fire Containment or Inhibiting Methods Employed:

(a) The functions are located in a separate fire-resistive enclosure.

(b) The means of fire detection, suppression and alarming are provided and accessible.

(c) Fire stops are provided for cable tray and piping penetrations through rated fire barriers.

(13) Remarks—None.

9A.4.1.3.37 Filter Demineralizer Area (Rm No. 347)

(1) Fire Area—F1200

(2) Equipment: See Table 9A.6-2

Safety-Related	Provides Core Cooling
No	No

(3) Radioactive Material Present—None that can be released as a result of fire.

(4) Qualifications of Fire Barriers—This area is comprised of 4 demineralizer pits in a large block of concrete. Access to the pits is by hatches at elevation 12300 mm. The pits and their contents represent no fire hazard for this floor. See Section 9A.4.1.4.23 for a discussion of the fire protection features associated with the hatch area for the demineralizer pits in lieu of any further discussion in this section.

9A.4.1.3.38 Division 4 Remote Multiplexing Room (Rm No. 381)

(1) Fire Area—F3401

(2) Equipment: See Table 9A.6-2

(3) Radioactive Material Present—None.

(4) Qualifications of Fire Barriers—The building exterior wall, the wall common with emergency electrical room A (Rm 310), the wall common with the corridor D (Rm 344), the wall common with RIP panel A room (Rm 340), the ceiling, and the floor are 3 h fire-resistive concrete construction. A 3 h fire-resistive door provides access to this room from emergency electrical room A (Rm 310).

(5) Combustibles Present:

Fire Loading	Total Heat of Combustion (MJ)
Cable Tray	727 MJ/m^2 NCLL (727 MJ/m^2 maximum average) applies.

(6) Detection Provided—Class A supervised POC in the room and manual alarm pull station outside the room in the R/B clean area leading to the control building corridor.

(7) Suppression Available:

Type	Location/Actuation
Standpipe and hose reel with an electrically safe nozzle.	Outside the room in the R/B clean area leading to the control building corridor/Manual
ABC hand extinguishers	Outside the room in the R/B clean area leading to the control building corridor/Manual

(8) Fire Protection Design Criteria Employed:

(a) The function is located in a fire area which is separate from the fire areas containing equipment which provide alternate means of performing the safety or shutdown function.

(b) Fire detection and suppression capability is provided and accessible.

(c) Fire stops are provided for cable tray and piping penetrations through rated fire barriers.

(9) Consequences of Fire—The postulated fire assumes the loss of the function. The provisions for core cooling systems backup are defined in Subsection 9A.2.5.

Smoke from a fire will be removed by the EHVAC(A) system operating in its smoke removal mode.

(10) Consequences of Fire Suppression—Suppression extinguishes the fire. Refer to Section 3.4, "Water Level (Flood) Design", for the drain system.

(11) Design Criteria Used for Protection Against Inadvertent Operation, Careless Operation or Rupture of the Suppression System:

(a) Location of the manual suppression system external to the room

(b) Provision of raised supports for the equipment

(c) Refer to Section 3.4, "Water Level (Flood) Design", for the drain system.

(d) ANSI B31.1 standpipe (rupture unlikely)

(12) Fire Containment or Inhibiting Methods Employed:

(a) The functions are located in a separate fire-resistive enclosure.

(b) The means of fire detection, suppression and alarming are provided and accessible.

(13) Remarks—None

9A.4.1.3.39 Reactor Water Sampling Rack Room (Rm 380)

(1) Fire Area—F3400

(2) Equipment: See Table 9A.6-2

Safety-Related	Provides Core Cooling
Yes, D4	Yes, D4

(3) Radioactive Material Present—None that can be released as a result of fire.

(4) Qualifications of Fire Barriers—The containment serves as one wall of the room. The remainder of the walls, and the floor are fire barriers and are of 3 h fire-resistive concrete construction. The ceiling is concrete and is not rated as it is internal to fire area F3400. Access to the room is provided from reactor water sampling rack room (Rm 349) via a 3 h fire-resistive door. This is a

division 4 room sitting within a division 2 fire area (F1200). Electrical cables for equipment in the room are routed to the room through conduit embedded in the floor and walls of the reactor building. This provides the equivalent of 3 hours of separation of the division 4 cables from areas containing cables from other divisions.

(5) Combustibles Present:

Fire Loading	Total Heat of Combustion (MJ)
Cable Tray	727 MJ/m^2 NCLL (727 MJ/m^2 maximum average) applies.

(6) Detection Provided—Class A supervised POC in the room and manual alarm pull station at Col. 1.8-B.5 at EL. 4800.

(7) Suppression Available:

Type	Location/Actuation
Standpipe and hose reel	Col. 1.8-B.5 at El.4800 mm/Manual
ABC hand extinguishers	Col. 1.8-B.5 at El.4800 mm/Manual

(8) Fire Protection Design Criteria Employed:

(a) The function is located in a fire area which is separate from the fire areas containing equipment which provides alternate means of performing the safety or shutdown function.

(b) Fire detection and suppression capability is provided and accessible.

(c) Fire stops are provided for cable tray and piping penetrations through rated fire barriers.

(9) Consequences of Fire—The postulated fire assumes the loss of the function. The provisions for core cooling systems backup are defined in Subsection 9A.2.5.

Smoke from a fire will be removed by the normal HVAC System operating in its smoke removal mode.

(10) Consequences of Fire Suppression—Suppression extinguishes the fire. Refer to Section 3.4, "Water Level (Flood) Design", for the drain system.

(11) Design Criteria Used for Protection Against Inadvertent Operation, Careless Operation or Rupture of the Suppression System:

(a) Location of the manual suppression system external to the room

(b) Provision of raised supports for the equipment

(c) Refer to Section 3.4, "Water Level (Flood) Design", for the drain system.

(d) ANSI B31.1 standpipe (rupture unlikely)

(12) Fire Containment or Inhibiting Methods Employed:

(a) The functions are located in a separate fire-resistive enclosure.

(b) The means of fire detection, suppression and alarming are provided and accessible.

(13) Remarks—None.

9A.4.1.3.40 FPC FD Rack Room (Rm No. 346)

(1) Fire Area—F1200

(2) Equipment: See Table 9A.6-2

Safety-Related	Provides Core Cooling
No	No

(3) Radioactive Material Present—None that can be released as a result of fire.

(4) Qualifications of Fire Barriers—The walls, ceiling and floor are concrete but are not fire rated as they are internal to fire area F1200. The containment serves as one wall of the room. Access and egress from the room is provided through a non rated door to corridor D (Rm 344).

(5) Combustibles Present:

Fire Loading	Total Heat of Combustion (MJ)
Tray	727 MJ/m^2 NCLL (727 MJ/m^2 maximum average) applies.

(6) Detection Provided—Class A supervised POC in the room and manual alarm pull station at Col. 1.8-B.5

(7) Suppression Available:

Type	Location/Actuation
Standpipe and hose reel	Col. 1.8-B.5/Manual
ABC hand extinguishers	Col. 1.8-B.5/Manual

(8) Fire Protection Design Criteria Employed:

(a) The function is located in a separate concrete enclosure.

(b) Fire detection and suppression capability is provided and accessible.

(c) Fire stops are provided for cable tray and piping penetrations through rated fire barriers.

(9) Consequences of Fire—The postulated fire assumes the loss of the function. Loss of function, which is not safety-related, is acceptable.

(10) Consequences of Fire Suppression—Suppression extinguishes the fire. Refer to Section 3.4, “Water Level (Flood) Design”, for the drain system.

(11) Design Criteria Used for Protection Against Inadvertent Operation, Careless Operation or Rupture of the Suppression System:

(a) Location of the manual suppression system external to the room

(b) Provision of raised supports for the equipment

(c) Refer to Section 3.4, “Water Level (Flood) Design”, for the drain system.

(d) ANSI B31.1 standpipe (rupture unlikely)

(12) Fire Containment or Inhibiting Methods Employed:

(a) The functions are located in a separate fire-resistive enclosure.

(b) The means of fire detection, suppression and alarming are provided and accessible.

(c) Fire stops are provided for cable tray and piping penetrations through rated fire barriers.

(13) Remarks—None.

9A.4.1.4 Building—Reactor Bldg El 12300 mm

9A.4.1.4.1 Upper Drywell (Rm No. 491)

(1) Fire Area—F4901

(2) Equipment: See Table 9A.6-2 for this elevation. Devices within the upper drywell are also listed at floor elevation 18100.

Safety-Related	Provides Core Cooling
Yes, D1,D2, D3,& D4	Yes

(3) Radioactive Material Present—Normally, none that can be released as a result of fire. Depending on operating history, low levels of contamination could be present and is contained within containment.

(4) Qualifications of Fire Barriers—Except for the steel drywell head, the walls, floor and ceiling are concrete, which is approximately 1 meter thick, as a minimum. Risers lead from the lower drywell up through the diaphragm floor to the upper drywell. The primary purpose of the risers is to equalize the pressure between the upper and lower drywell. The risers are also used for the routing of cables and piping between the upper and lower drywells. There is a personnel lock with its center line at elevation 19170 mm and azimuth 230 degrees. This single personnel lock provides the only access and egress for the upper drywell. An equipment removal lock is provided at centerline elevation 19170 mm and azimuth 130 degrees. The drywell atmosphere is inerted with nitrogen during plant operation.

(5) Combustibles Present:

Fire Loading	Total Heat of Combustion (MJ)
Divisional cable trays containing 14 kg/m of XLPE-FR cable insulation	727 MJ/m^2, NCLL (727 MJ/m^2 maximum average) applies.

(6) Detection Provided: None - Primary Containment is inerted during the normal plant operation.

(7) Suppression Available:

Type	Location/Actuation
Inerted during plant operation. Drywell spray is ultimate line of defense during plant outage.	General/Manual
Standpipe and hose reel.	Personnel lock entrance/Manual
ABC hand extinguishers during significant outage work.	Temporary as conditions warrant/ Manual

(8) Fire Protection Design Criteria Employed:

(a) Credit is taken for the fact that the drywell is inerted during plant operation.

(b) Quantities of combustibles are minimized.

(c) The spacing between redundant equipment and cabling is kept to a maximum.

(d) Smoke removal is provided by the drywell purge and exhaust system.

(9) Consequences of Fire—A fire during plant operation is not possible due to the drywell being inerted. A fire in the upper drywell would not prevent the continuation of core cooling.

(10) Consequences of Fire Suppression—Suppression extinguishes the fire. Refer to Section 3.4, “Water Level (Flood) Design”, for the drain system.

(11) Design Criteria Used for Protection Against Inadvertent Operation, Careless Operation or Rupture of the Suppression System:

(a) Location of the manual suppression system external to the drywell

(b) Provision of raised supports for the equipment

(c) Refer to Section 3.4, “Water Level (Flood) Design”, for the drain system.

(d) ANSI B31.1 standpipe, external to the drywell (rupture unlikely)

(12) Fire Containment or Inhibiting Methods Employed:

(a) Inerted atmosphere.

(b) Quantities of combustibles minimized.

(13) Remarks:

(a) There are containment electrical penetrations in the upper drywell.

(b) The valve and HVAC motors will have small quantities of lubricating grease for their bearings. These minor amounts of grease do not present a fire hazard.

9A.4.1.4.2 North Controlled Entry and Corridor A (Rm No. 410)

(1) Fire Area—F4101

(2) Equipment: See Table 9A.6-2

Safety-Related	Provides Core Cooling
Yes, D1	Yes, D1

(3) Radioactive Material Present—None that can be released as a result of fire.

(4) Qualifications of Fire Barriers—A controlled access entryway is included in this room. The entry wall common with the steam tunnel (Rm No. 440) and part of the exterior wall serve as fire barriers between adjacent fire areas and are of 3 h fire-resistive concrete construction. The remainder of the walls, the ceiling and the floor are concrete and are not rated as they are internal to fire area F4101. This entry serves as the main access from the control building for the north half of the reactor building. The door from the control building is a 3 h fire-resistive door.

The corridor A walls common with the steam tunnel (Rm 440), the stair and elevator well walls, A diesel generator room (Rm 412), valve room (A) and the service bay (Rm 413) serve as fire barriers between adjacent fire areas and are of 3 h fire-resistive concrete construction. The floor is also a fire barrier to limit the size of the fire areas below and to protect the lower regions of the building, which contain the majority of the ESF equipment. The ceiling just outside the ECCS valve room A (Rm 414) is a fire barrier. The remainder of the walls and the ceiling are concrete and are not rated as they are internal to fire area F4101. Access to the corridor is provided from the controlled entry room, the stairs and the elevator, and corridor C (Rm 430). The door to corridor C is a 3 h fire-resistive door. The corridor provides direct access to the electrical and instrumentation penetration room (Rm 411) through a non-fire-rated door and to ECCS valve room A through a 3 h fire rated door.

(5) Combustibles Present:

Fire Loading	Total Heat of Combustion (MJ)
Cable Tray	727 MJ/m^2 NCLL (727 MJ/m^2 maximum average) applies

(6) Detection Provided—Class A supervised POC in the room and manual alarm pull stations at 5.4-B.1 and 5.9-F.2.

(7) Suppression Available:

Type	Location/Actuation
Standpipe and hose reel	Col. 5.4-B.1& 5.9-F.2/Manual
ABC hand extinguishers	Col. 5.4-B.1& 5.9-F.2/Manual

(8) Fire Protection Design Criteria Employed:

(a) The function is located in a separate fire resistive enclosure.

(b) Fire detection and suppression capability is provided and accessible.

(c) Fire stops are provided for cable tray and piping penetrations through rated fire barriers.

(9) Consequences of Fire—The postulated fire assumes the loss of the function. The provisions for core cooling systems backup are defined in Subsection 9A.2.5. Alternate access is provided by South Controlled Access Entry (Rm No. 193) Access is provided to the corridor from either end.

Smoke from a fire will be removed by the normal HVAC System operating in its smoke removal mode.

(10) Consequences of Fire Suppression—Suppression extinguishes the fire. Refer to Section 3.4, “Water Level (Flood) Design”, for the drain system.

(11) Design Criteria Used for Protection Against Inadvertent Operation, Careless Operation or Rupture of the Suppression System:

(a) Location of the manual suppression system in the corridor, external to the rooms containing the main safety-related equipment

(b) Provision of raised supports for the equipment

(c) Refer to Section 3.4, "Water Level (Flood) Design", for the drain system.

(d) ANSI B31.1 standpipe (rupture unlikely)

(12) Fire Containment or Inhibiting Methods Employed:

(a) The functions are located in a separate fire-resistive enclosure.

(b) The means of fire detection, suppression and alarming are provided and accessible.

(13) Remarks—Although the areas surrounding the diesel generator room are of the same safety division, the diesel generator room is designated as a separate fire area due to the relatively large amounts of lubricating and fuel oil present.

9A.4.1.4.3 E and I Penetration Room (Div 1)(Rm No. 411)

(1) Fire Area—F4101

(2) Equipment: See Table 9A.6-2

Safety-Related	Provides Core Cooling
Yes, D1	Yes, D1

(3) Radioactive Material Present—None that can be released as a result of fire.

(4) Qualifications of Fire Barriers—The floor is a fire barrier and is of 3 h fire-resistive concrete construction. The walls common to the Steam Tunnel (Rm 440) and the ECCS Valve A Room (Rm 414) are fire barriers and are of 3 h fire-resistive concrete construction. The other walls and the ceiling are concrete but are not rated as they are internal to fire area F4101. The containment serves as one wall of the room. Access to the room is provided from Corridor A (Rm 410) through an entry vestibule with a nonrated door.

(5) Combustibles Present:

Fire Loading	Total Heat of Combustion (MJ)
Cable Tray	1454 MJ/m^2 NCLL (1454 MJ/m^2 maximum average) applies

(6) Detection Provided—Class A supervised POC in the room and manual alarm pull station at Col. 5.4-B.1.

(7) Suppression Available:

Type	Location/Actuation
Standpipe and hose reel	Col. 5.4-B.1/Manual
ABC hand extinguishers	Col. 5.4-B.1/Manual

(8) Fire Protection Design Criteria Employed:

(a) The function is located in a separate fire resistive enclosure.

(b) Fire detection and suppression capability is provided and accessible.

(9) Consequences of Fire—The postulated fire assumes the loss of the function. The provisions for core cooling systems backup are defined in Subsection 9A.2.5.

Smoke from a fire will be removed by the normal HVAC System operating in its smoke removal mode.

(10) Consequences of Fire Suppression—Suppression extinguishes the fire. Refer to Section 3.4, "Water Level (Flood) Design", for the drain system.

(11) Design Criteria Used for Protection Against Inadvertent Operation, Careless Operation or Rupture of the Suppression System:

(a) Location of the manual suppression system external to the room

(b) Provision of raised supports for the equipment

(c) Refer to Section 3.4, "Water Level (Flood) Design", for the drain system.

(d) ANSI B31.1 standpipe (rupture unlikely)

(12) Fire Containment or Inhibiting Methods Employed:

(a) The functions are located in a separate fire-resistive enclosure.

(b) The means of fire detection, suppression and alarming are provided and accessible.

(13) Remarks—None.

9A.4.1.4.4 Diesel Generator A Room (Rm No. 412)

(1) Fire Area—F4100

(2) Equipment: See Table 9A.6-2

Safety-Related	Provides Core Cooling
Yes, D1	Yes, D1

(3) Radioactive Material Present—None.

(4) Qualifications of Fire Barriers—The building exterior walls, the walls common with Corridor A (Rm 410), the wall common with stair wells (Rooms 195 and 316), and the floor are of 3 h fire resistive concrete construction. The interior partition walls, and ceiling are not fire rated as they are internal to fire F4100. The exterior wall of the room has a removable section for removal of equipment from the diesel generator room. Access to this room is provided from the Clean Area Access A/C (Rm 413) through a 3 h fire rated door and through the removable section in the exterior wall.

(5) Combustibles Present:

Fire Loading	Total Heat of Combustion (MJ)
Cable Tray Lubricating Oil Fuel Oil	Could be variable due to possible oil leaks. Foam sprinkler system provided.

(6) Detection Provided—Class A supervised rate-compensated thermal detectors and infrared detectors. The detection system is a cross-zoned system requiring two detectors, one of each in each zone. Each detector initiates a local alarm upon sensing fire. The second detector alarm provides fire confirmation, which opens the preaction valve and initiates the system alarm in the control room. There are manual pull stations at Col. 6.5-C.9.

(7) Suppression Available:

Type	Location/Actuation
Preaction foam-water sprinkler system. Audible alarms are provided.	Initiates by individual discharge head opening (when fusible link melts) and simultaneous receipt of any one of the following signals: (a) Both detector alarm signals (one of each in each zone) or, (b) Either detector alarm signal in combination with loss of pressure in the dry pipe/Automatic
Standpipe and hose reel	Col. 6.5-C.9/Manual
Foam hose real	Manual
ABC hand extinguishers	Col. 6.5-C.9/Manual

(8) Fire Protection Design Criteria Employed:

(a) The function is located in a fire area which is separate from the fire areas containing equipment which provide alternate means of performing the safety or shutdown function.

(b) Fire detection and suppression capability is provided and accessible.

(c) Fire stops are provided for cable tray and piping penetrations through rated fire barriers.

(9) Consequences of Fire—The postulated fire assumes the loss of the function. The provisions for core cooling systems backup are defined in Subsection 9A.2.5.

Smoke from a fire will be removed by the EHVAC(A) system operating in its smoke removal mode. The emergency supply fan (A) will also remove smoke from the room if the diesel is running or if initiated manually.

(10) Consequences of Fire Suppression—Suppression extinguishes the fire. Refer to Section 3.4, “Water Level (Flood) Design”, for the drain system.

(11) Design Criteria Used for Protection Against Inadvertent Operation, Careless Operation or Rupture of the Suppression System:

(a) Location of the manual hose suppression system external to the room

(b) Provision of raised supports for the equipment

(c) ANSI B31.1 standpipe (rupture unlikely)

(d) Provision of cross zone detector alarms

(e) Provision of low pressure alarm in dry pipe

(f) Provision of preaction valve

(g) Provision of close head sprinkler system

(12) Fire Containment or Inhibiting Methods Employed:

(a) The functions are located in a separate fire-resistive enclosure.

(b) The means of fire detection, suppression and alarming are provided and accessible.

(13) Remarks—Although the areas surrounding the adjacent diesel generator room are of the same safety division, the diesel generator room is designated as a separate fire area due to the relatively large amounts of lubricating and fuel oil present.

9A.4.1.4.5 Clean Area Access A/C (Rm No. 413)

(1) Fire Area—F3300

(2) Equipment: See Table 9A.6-2

Safety-Related	Provides Core Cooling
No	No

(3) Radioactive Material Present—None.

(4) Qualifications of Fire Barriers—All walls are of 3 h fire-resistive concrete construction. The floor and ceiling are common to fire area F3300, above and below, and therefore are not rated. There are two 3 h fire-resistive doors, one each to diesel generator rooms A and C. There is a floor hatch for removal of equipment from the floor below. A removable panel is provided in the exterior wall for moving equipment in and out of the reactor building.

(5) Combustibles Present—No significant quantities of exposed combustibles. 727 MJ/m^2 NCLL (727 MJ/m^2 maximum average) applies.

(6) Detection Provided—Class A supervised POC detection system in the room and alarm pull station at Col. 6.5-C.9.

(7) Suppression Available:

Type	Location/Actuation
Standpipe and hose reel	6.5-C.9/Manual
ABC hand extinguishers	6.5-C.9/Manual

(8) Fire Protection Design Criteria Employed:

(a) The non-safety-related function is located in a separate fire resistive enclosure.

(b) Fire detection and suppression capability is provided and accessible.

(c) Fire stops are provided for cable tray and piping penetrations through rated fire barriers.

(9) Consequences of Fire—The postulated fire assumes loss of function of the room and, consequently, temporary loss of access to the A and C diesel generator rooms. Continuous access to the diesel generator rooms is not required. Access to diesel generator room B is unaffected.

Smoke from a fire will be removed by the EHVAC(C) system operating in its smoke removal mode.

(10) Consequences of Fire Suppression—Suppression extinguishes the fire. Refer to Section 3.4, “Water Level (Flood) Design”, for the drain system.

(11) Design Criteria Used for Protection Against Inadvertent Operation, Careless Operation or Rupture of the Suppression System:

(a) Location of the manual suppression system internal to this non-safety-related room

(b) Refer to Section 3.4, “Water Level (Flood) Design”, for the drain system.

(c) ANSI B31.1 standpipe (rupture unlikely)

(d) Alternate access routes to other areas of the reactor building are provided

(12) Fire Containment or Inhibiting Methods Employed:

(a) The functions are located in a separate fire-resistive enclosure.

(b) The means of fire detection, suppression and alarming are provided and accessible.

(13) Remarks—None

9A.4.1.4.6 ECCS Valve A Room (Rm No. 414)

(1) Fire Area—F1100

(2) Equipment: See Table 9A.6-2

Safety-Related	Provides Core Cooling
Yes, D1	Yes, D1

(3) Radioactive Material Present—None that can be released as a result of fire.

(4) Qualifications of Fire Barriers—All walls serve as fire barriers and are of 3 h fire-resistive concrete construction. The floor is common to fire area F1100 below and therefore not rated. A section of the ceiling common to fire area F4110 above is of 3 h fire-resistive concrete construction. The remainder of the ceiling is internal to fire area F1100 and not rated concrete construction. The reactor containment serves as one wall to this room. Access to the room is provided from corridor A (Rm 410) through an entry room and a 3 h fire-rated door to the corridor.

(5) Combustibles Present:

Fire Loading	Total Heat of Combustion (MJ)
None	727 MJ/m^2 NCLL (727 MJ/m^2 maximum average) applies

(6) Detection Provided—Class A supervised POC in the room and manual alarm pull stations at Col. 5.4-B.1 and 5.9-F.2.

(7) Suppression Available:

Type	Location/Actuation
Standpipe and hose reel	Col. 5.4-B.1 & 5.9-F.2/Manual
ABC hand extinguishers	Col. 5.4-B.1 & 5.9-F.2/Manual

(8) Fire Protection Design Criteria Employed:

(a) The function is located in a separate fire resistive enclosure.

(b) Fire detection and suppression capability is provided and accessible.

(c) All penetrations are within a single fire area.

(9) Consequences of Fire—The postulated fire assumes the loss of the function. The provisions for core cooling systems backup are defined in Subsection 9A.2.5.

Smoke from a fire will be removed by the normal HVAC System operating in its smoke removal mode.

(10) Consequences of Fire Suppression—Suppression extinguishes the fire. Refer to Section 3.4, "Water Level (Flood) Design", for the drain system.

(11) Design Criteria Used for Protection Against Inadvertent Operation, Careless Operation or Rupture of the Suppression System:

(a) Location of the manual suppression system external to the room

(b) Provision of raised supports for the equipment

(c) Refer to Section 3.4, "Water Level (Flood) Design", for the drain system.

(d) ANSI B31.1 standpipe (rupture unlikely)

(12) Fire Containment or Inhibiting Methods Employed:

(a) The functions are located in a separate fire-resistive enclosure.

(b) The means of fire detection, suppression and alarming are provided and accessible.

(13) Remarks—The room contains cable in conduit only.

9A.4.1.4.7 ECCS Valve C Room (Rm No. 431)

(1) Fire Area—F1300

(2) Equipment: See Table 9A.6-2

Safety-Related	Provides Core Cooling
Yes, D3	Yes, D3

(3) Radioactive Material Present—None that can be released as a result of fire.

(4) Qualifications of Fire Barriers—All walls serve as fire barriers and are of 3 h fire-resistive concrete construction. A section of the ceiling is common to fire area F4310 above and is of 3 h fire-resistive concrete construction. The remaining ceiling area is internal to fire area F1300 and not rated. The reactor containment serves as one wall to this room. Access to the room is provided from corridor C (Rm 430) through an entry room and a 3 h fire-rated door to the corridor.

(5) Combustibles Present:

Fire Loading	Total Heat of Combustion (MJ)
None	727 MJ/m^2 NCLL (727 MJ/m^2 maximum average) applies

(6) Detection Provided—Class A supervised POC in the room and manual alarm pull station at Col. 5.4-B.1 and 5.9-F.2.

(7) Suppression Available:

Type	Location/Actuation
Standpipe and hose reel	Col. 5.4-B.1 & 5.9-F.2/Manual
ABC hand extinguishers	Col. 5.4-B.1 & 5.9-F.2/Manual

(8) Fire Protection Design Criteria Employed:

(a) The function is located in a separate fire resistive enclosure.

(b) Fire detection and suppression capability is provided and accessible.

(9) Consequences of Fire—The postulated fire assumes the loss of the function. The provisions for core cooling systems backup are defined in Subsection 9A.2.5.

Smoke from a fire will be removed by the normal HVAC System operating in its smoke removal mode.

(10) Consequences of Fire Suppression—Suppression extinguishes the fire. Refer to Section 3.4, "Water Level (Flood) Design", for the drain system.

(11) Design Criteria Used for Protection Against Inadvertent Operation, Careless Operation or Rupture of the Suppression System:

(a) Location of the manual suppression system external to the room

(b) Provision of raised supports for the equipment

(c) Refer to Section 3.4, "Water Level (Flood) Design", for the drain system.

(d) ANSI B31.1 standpipe (rupture unlikely)

(12) Fire Containment or Inhibiting Methods Employed:

(a) The functions are located in a separate fire-resistive enclosure.

(b) The means of fire detection, suppression and alarming are provided and accessible.

(13) Remarks—The room contains cable in conduit only.

9A.4.1.4.8 Corridor C (Equipment Entry) (Rm No. 430)

(1) Fire Area—F4301

(2) Equipment: See Table 9A.6-2

Safety-Related	Provides Core Cooling
Yes, D3	Yes, D3

(3) Radioactive Material Present—None that can be released as a result of fire.

(4) Qualifications of Fire Barriers—The walls common with the C diesel generator room (Rm 432), valve room (C) (Rm 431), corridor B (Rm 420), the Flammability Control System room (Rm 436) and the exterior wall serve as fire barriers and are of 3 h fire-resistive concrete construction. The floor is also a fire barrier to limit the size of the fire areas below and to protect the

lower regions of the building, which contains the majority of the ESF equipment. The walls are concrete and are not rated as they are internal to fire area F4301. A section of the ceiling common to fire areas F4300, F1300 and F3300 above is of 3 h fire-resistive concrete construction. The remainder of the ceiling is not fire rated as it is internal to fire area F4310. Access to the corridor is provided from corridors A and B via 3 h fire-resistive doors. The corridor provides direct access to the electrical and instrumentation penetration room (Rm 433) through a nonrated door and valve room
(C) (Rm 431) and the Flammability Control System room (Rm 436) through 3 h fire-resistive doors. There is an open hatch to the floors above. A large steel non-fire-rated door provides access to the reactor building for moving in fuel and other large loads.

(5) Combustibles Present:

Fire Loading	Total Heat of Combustion (MJ)
Cable Tray	727 MJ/m^2 NCLL (727 MJ/m^2 maximum average) applies
Lubricant Fuel Oil	Could be a variable due to possible lubricant, and fuel oil leaks in transient. Deluge sprinkler system provided.

(6) Detection Provided—Class A supervised POC in the room and manual alarm pull stations at 5.9-F.2 and 2.1-F.1.

(7) Suppression Available:

Type	Location/Actuation
Ordinary hazard deluge sprinkler having a water density of 6.1 L/min/m^2 and a coverage of 9.3 m^2 per head	Hatch Area/Manual
Standpipe and hose reel	Col. 5.9-F.2 & 2.1-F.1/Manual
ABC hand extinguishers	Col. 5.9-F.2 & 2.1-F.1/Manual

(8) Fire Protection Design Criteria Employed:

(a) The function is located in a separate fire resistive enclosure.

(b) Fire detection and suppression capability is provided and accessible.

(c) Fire stops are provided for cable tray and piping penetrations through rated fire barriers.

(d) Sprinkler system provided as extra protection for the temporary higher fire loadings due to bringing trucks and equipment into the area and to compensate for the large open hatch.

(9) Consequences of Fire—The postulated fire assumes the loss of the function. The provisions for core cooling systems backup are defined in Subsection 9A.2.5. Access is provided to the corridor from either end.

Smoke from a fire will be removed by the normal HVAC System operating in its smoke removal mode.

(10) Consequences of Fire Suppression—Suppression extinguishes the fire. Refer to Section 3.4, "Water Level (Flood) Design", for the drain system.

(11) Design Criteria Used for Protection Against Inadvertent Operation, Careless Operation or Rupture of the Suppression System:

(a) Location of the manual suppression system in the corridor, external to the rooms containing the main safety-related equipment

(b) Provision of raised supports for the equipment

(c) Refer to Section 3.4, "Water Level (Flood) Design", for the drain system.

(d) ANSI B31.1 standpipe (rupture unlikely)

(12) Fire Containment or Inhibiting Methods Employed:

(a) The functions are located in a separate fire-resistive enclosure.

(b) The means of fire detection, suppression and alarming are provided and accessible.

(13) Remarks:

(a) Although the areas surrounding the diesel generator room are of the same safety division, the diesel generator room is designated as a separate fire area due to the relatively large amounts of lubricating and fuel oil present.

(b) The common wall between the corridor and valve room (C) was specified to have a 3 h fire rating to protect the ESF equipment in the

valve room during periods of increased fire loading in the corridor during maintenance periods.

9A.4.1.4.9 E and I Penetration Room (Div 3)(Rm No. 433)

(1) Fire Area—F4301

(2) Equipment: See Table 9A.6-2

Safety-Related	Provides Core Cooling
Yes, D3	Yes, D3

(3) Radioactive Material Present—None that can be released as a result of fire.

(4) Qualifications of Fire Barriers—The floor and the wall common with ECCS Valve Room C are fire barriers and are of 3 h fire-resistive concrete construction. The containment serves as one wall of the room. The remaining walls and ceiling are concrete but are not fire rated as they are internal to fire area F4301. Access to the room is provided from Corridor C (Rm 430) through an entry vestibule with a nonrated door.

(5) Combustibles Present:

Fire Loading	Total Heat of Combustion (MJ)
Cable Tray	727 MJ/m^2 NCLL (727 MJ/m^2 maximum average) applies

(6) Detection Provided—Class A supervised POC in the room and manual alarm pull station at Col. 5.9-F.2 and 2.1-F.1.

(7) Suppression Available:

Type	Location/Actuation
Standpipe and hose reel	Col. 5.9-F.2 & 2.1-F.1/Manual
ABC hand extinguishers	Col. 5.9-F.2 & 2.1-F.1/ Manual

(8) Fire Protection Design Criteria Employed:

(a) The function is located in a separate fire resistive enclosure.

(b) Fire detection and suppression capability is provided and accessible.

(9) Consequences of Fire—The postulated fire assumes the loss of the function. The provisions for core cooling systems backup are defined in Subsection 9A.2.5.

Smoke from a fire will be removed by the normal HVAC System operating in its smoke removal mode.

(10) Consequences of Fire Suppression—Suppression extinguishes the fire. Refer to Section 3.4, "Water Level (Flood) Design", for the drain system.

(11) Design Criteria Used for Protection Against Inadvertent Operation, Careless Operation or Rupture of the Suppression System:

(a) Location of the manual suppression system external to the room

(b) Provision of raised supports for the equipment

(c) Refer to Section 3.4, "Water Level (Flood) Design", for the drain system.

(d) ANSI B31.1 standpipe (rupture unlikely)

(12) Fire Containment or Inhibiting Methods Employed:

(a) The functions are located in a separate fire-resistive enclosure.

(a) The means of fire detection, suppression and alarming are provided and accessible.

(13) Remarks—None.

9A.4.1.4.10 Diesel Generator C Room (Rm No. 432)

(1) Fire Area—F4300

(2) Equipment: See Table 9A.6-2

Safety-Related	Provides Core Cooling
Yes, D3	Yes, D3

(3) Radioactive Material Present—None.

(4) Qualifications of Fire Barriers—The building exterior walls, the walls common with Corridor C (Rm 430), the wall common with Clean Area Access A/C (Rm 413), and the floor are of 3 h fire-resistive concrete construction. The interior partition walls, is not fire rated as they are internal to fire F4300. The ceiling is of concrete construction but is not a fire barrier as the HVAC for the

diesel is located on the floor above. The exterior wall of the room has a removable section for removal of equipment from the diesel generator room. Access to this room is provided from the clean area access A/C (Rm 413) through a 3 h fire rated door and through the removable section of the external wall.

(5) Combustibles Present:

Fire Loading	Total Heat of Combustion (MJ)
Cable Tray	727 MJ/m^2 NCLL (727 MJ/m^2 maximum average) applies
Lubricant Fuel Oil Fuel Oil	Could be variable due to possible oil leaks. Foam sprinkler system provided.

(6) Detection Provided—Class A supervised rate-compensated thermal detectors and infrared detectors. The detection system is a cross-zoned system requiring two detectors, one of each in each zone. Each detector initiates a local alarm upon sensing fire. The second detector alarm provides fire confirmation, which opens the preaction valve and initiates the system alarm in the control room. There are manual pull stations at Col. 6.5-C.9.

(7) Suppression Available:

Type	Location/Actuation
Preaction foam-water sprinkler system. Audible alarms are provided.	Initiates by individual discharge head opening (when fusible link melts) and simultaneous receipt of any one of the following signals: (a) both detector alarm signals (one of each in each zone) or, (b) either detector alarm signal in combination with loss of pressure in the dry pipe./Automatic
Standpipe and hose reel	Col. 6.5-C.9/Manual

Type	Location/Actuation
Foam hose reel	Manual
ABC hand extinguishers	Col. 6.5-C.9/Manual

(8) Fire Protection Design Criteria Employed:

(a) The function is located in a fire area which is separate from the fire areas containing equipment which provide alternate means of performing the safety or shutdown function.

(b) Fire detection and suppression capability is provided and accessible.

(c) Fire stops are provided for cable tray and piping penetrations through rated fire barriers.

(9) Consequences of Fire—The postulated fire assumes the loss of the function. The provisions for core cooling systems backup are defined in Subsection 9A.2.5.

Smoke from a fire will be removed by the EHVAC(C) system operating in its smoke removal mode. The emergency supply fan (C) will also remove smoke from the room if the diesel is running or if initiated manually.

(10) Consequences of Fire Suppression—Suppression extinguishes the fire. Refer to Section 3.4, “Water Level (Flood) Design”, for the drain system.

(11) Design Criteria Used for Protection Against Inadvertent Operation, Careless Operation or Rupture of the Suppression System:

(a) Location of the manual hose suppression system external to the room

(b) Provision of raised supports for the equipment

(c) ANSI B31.1 standpipe (rupture unlikely)

(d) Provision of cross zone detector alarms

(e) Provision of low pressure alarm in dry pipe

(f) Provision of preaction valve

(g) Provision of close head sprinkler system

(12) Fire Containment or Inhibiting Methods Employed:

(a) The functions are located in a separate fire-resistive enclosure.

(b) The means of fire detection, suppression and alarming are provided and accessible.

(13) Remarks—Although the areas surrounding the adjacent diesel generator room are of the same safety division, the diesel generator room is designated as a separate fire area due to the relatively large amounts of lubricating and fuel oil present.

9A.4.1.4.11 Flammability Control System Room (Div. 3) (Rm No. 436)

(1) Fire Area—F4320

(2) Equipment: See Table 9A.6-2

Safety-Related	Provides Core Cooling
Yes, D1, and D2	No

(3) Radioactive Material Present—None that can be released as a result of fire.

(4) Qualifications of Fire Barriers—The floor and interior and exterior walls are fire barriers and are of 3 h fire-resistive concrete construction. The ceiling is formed by the bottom of the spent fuel storage pool (F4301) and is a 3 h fire barrier. Personnel access is provided via a 3 h fire-resistive door from corridor C (Rm 430).

(5) Combustibles Present:

Fire Loading	Total Heat of Combustion (MJ)
Cable Tray	727 MJ/m^2 NCLL (727 MJ/m^2 maximum average) applies

(6) Detection Provided—Class A supervised POC in the room and manual alarm pull station at Col. 5.9-F.2 and 2.1-F.1.

(7) Suppression Available:

Type	Location/Actuation
Standpipe and hose reel	Col. 5.9-F.2 & 2.1-F.1/Manual
ABC hand extinguishers	Col. 5.9-F.2 & 2.1-F.1/Manual

(8) Fire Protection Design Criteria Employed:

(a) The function is located in a separate fire resistive enclosure.

(b) Fire detection and suppression capability is provided and accessible.

(9) Consequences of Fire—The postulated fire assumes the loss of the function.

Smoke from a fire will be removed by the EHVAC(C) system operating in its smoke removal mode.

(10) Consequences of Fire Suppression—Suppression extinguishes the fire. Refer to Section 3.4, "Water Level (Flood) Design", for the drain system.

(11) Design Criteria Used for Protection Against Inadvertent Operation, Careless Operation or Rupture of the Suppression System:

(a) Location of the manual suppression system external to the room

(b) Provision of raised supports for the equipment

(c) Refer to Section 3.4, "Water Level (Flood) Design", for the drain system.

(d) ANSI B31.1 standpipe (rupture unlikely)

(12) Fire Containment or Inhibiting Methods Employed:

(a) The functions are located in a separate fire-resistive enclosure.

(b) The means of fire detection, suppression and alarming are provided and accessible.

(13) Remarks—None.

9A.4.1.4.12 Corridor B (Rm No. 420)

(1) Fire Area—F4201

(2) Equipment: See Table 9A.6-2

Safety-Related	Provides Core Cooling
Yes, D2	Yes, D2

(3) Radioactive Material Present—None that can be released as a result of fire.

(4) Qualifications of Fire Barriers—The walls common with the Flammability Control System Room (Rm 425), the elevator and stair well walls, the Diesel Generator B Room (Rm 423) and the ECCS Valve B Room (Rm 421) serve as fire barriers and are of 3 h fire-resistive concrete construction. The floor is also a fire barrier to limit the size of the fire areas below and to protect the lower regions of the building, which contains the majority of the ESF equipment. The walls common with the E and I Penetration Room (Rm 422) and the ceiling are fire-resistive concrete but are nonrated as they are internal to fire area F4201. Access to the corridor is provided from corridor D (Rm 445), corridor C (Rm 430) and stairs and elevator No.3. A 3 h fire damper is installed in the HVAC duct (located next to the elevator) where it passes through the fire barrier floor to the division 2 areas on the level below. This fire barrier divides the division 2 area of the building to limit the magnitude of possible damage due to a single fire.

(5) Combustibles Present:

Fire Loading	Total Heat of Combustion (MJ)
Cable Tray	727 MJ/m^2 NCLL (727 MJ/m^2 maximum average) applies

(6) Detection Provided—Class A supervised POC in the room and manual alarm pull stations at 5.9-F.2 and 2.1-F.1.

(7) Suppression Available:

Type	Location/Actuation
Standpipe and hose reel	Col. 5.9-F.2 & 2.1-F.1/Manual
ABC hand extinguishers	Col. 5.9-F.2 & 2.1-F.1/Manual

(8) Fire Protection Design Criteria Employed:

(a) The function is located in a separate fire resistive enclosure.

(b) Fire detection and suppression capability is provided and accessible.

(c) Fire stops are provided for cable tray and piping penetrations through rated fire barriers.

(9) Consequences of Fire—The postulated fire assumes the loss of the function. The provisions for core cooling systems backup are defined in Subsection 9A.2.5. Access is provided to the corridor from either end.

Smoke from a fire will be removed by the normal HVAC System operating in its smoke removal mode.

(10) Consequences of Fire Suppression—Suppression extinguishes the fire. Refer to Section 3.4, "Water Level (Flood) Design", for the drain system.

(11) Design Criteria Used for Protection Against Inadvertent Operation, Careless Operation or Rupture of the Suppression System:

(a) Location of the manual suppression system in the corridor, external to the rooms containing the main safety-related equipment

(b) Provision of raised supports for the equipment

(c) Refer to Section 3.4, "Water Level (Flood) Design", for the drain system.

(d) ANSI B31.1 standpipe (rupture unlikely)

(12) Fire Containment or Inhibiting Methods Employed:

(a) The functions are located in a separate fire-resistive enclosure.

(b) The means of fire detection, suppression and alarming are provided and accessible.

(13) Remarks—Although the areas surrounding the diesel generator room are of the same safety division, the diesel generator room is designated as a separate fire area due to the relatively large amounts of lubricating and fuel oil present.

9A.4.1.4.13 E and I Penetration Room (Rm No. 424)

(1) Fire Area—F4201

(2) Equipment: See Table 9A.6-2

Safety-Related	Provides Core Cooling
Yes	No

(3) Radioactive Material Present—None that can be released as a result of fire.

(4) Qualifications of Fire Barriers—The floor and the wall adjacent to room 435 is a fire barrier and is of 3 h fire-resistive construction. The containment serves as one wall of the room. The remaining walls and ceiling are fire- resistive concrete but are not fire rated as they are internal to fire area F4201. Access to the room is provided from Corridor C (Rm 420) through an entry vestibule.

(5) Combustibles Present:

Fire Loading	Total Heat of Combustion (MJ)
Cable Tray	1454 MJ/m^2 NCLL (1454 MJ/m^2 maximum average) applies

(6) Detection Provided—Class A supervised POC in the room and manual alarm pull station at Col. 5.9-F.2 and 2.1-F.1.

(7) Suppression Available:

Type	Location/Actuation
Standpipe and hose reel	Col. 5.9-F.2 & 2.1-F.1/ Manual
ABC hand extinguishers	Col. 5.9-F.2 & 2.1-F.1/ Manual

(8) Fire Protection Design Criteria Employed:

(a) The function is located in a separate fire resistive enclosure.

(b) Fire detection and suppression capability is provided and accessible.

(9) Consequences of Fire—The postulated fire assumes the loss of the function. Loss of the non-safety-related function is acceptable.

Smoke from a fire will be removed by the normal HVAC System operating in its smoke removal mode.

(10) Consequences of Fire Suppression—Suppression extinguishes the fire. Refer to Section 3.4, “Water Level (Flood) Design”, for the drain system.

(11) Design Criteria Used for Protection Against Inadvertent Operation, Careless Operation or Rupture of the Suppression System:

(a) Location of the manual suppression system external to the room

(b) Provision of raised supports for the equipment

(c) Refer to Section 3.4, “Water Level (Flood) Design”, for the drain system.

(d) ANSI B31.1 standpipe (rupture unlikely)

(12) Fire Containment or Inhibiting Methods Employed:

(a) The functions are located in a separate fire-resistive enclosure.

(b) The means of fire detection, suppression and alarming are provided and accessible.

(13) Remarks—None.

9A.4.1.4.14 Not Used

9A.4.1.4.15 Diesel Generator B Room (Rm No. 423)

(1) Fire Area—F4200

(2) Equipment: See Table 9A.6-2

Safety-Related	Provides Core Cooling
Yes, D2	Yes, D2

(3) Radioactive Material Present—None.

(4) Qualifications of Fire Barriers—The building exterior walls, the walls common with Corridor B (Rm 420), the wall common with FCS room (Rm 425), the wall common with stair wells (Rms 193 and 329), and the floor are of 3 h fire resistive concrete construction. The interior partition walls, and ceiling are not fire rated as they are internal to fire F4200. The ceiling of the room is not a fire barrier as the fan room is located directly above this diesel generator room. The exterior wall of the room has a removable section for removal of equipment from the diesel generator room. Access to this room is provided from the Clean Area Access C/D (Rm 426) through a 3 h fire-rated door and through the removable section of the external wall.

(5) Combustibles Present:

Fire Loading	Total Heat of Combustion (MJ)
Cable Tray Lubricating Oil Fuel Oil	Could be variable due to possible oil leaks. Foam sprinkler system provided.

(6) Detection Provided—Class A supervised rate-compensated thermal detectors and infrared detectors. The detection system is a cross-zoned system requiring two detectors, one of each in each zone. Each detector initiates a local alarm upon sensing fire. The second detector alarm provides fire confirmation, which opens the preaction valve and initiates the system alarm in the control room. There is a manual pull stations at Col. 1.4-C.8.

(7) Suppression Available:

Type	Location/Actuation
Preaction foam-water sprinkler system. Audible alarms are provided.	Initiates by individual discharge head opening (when fusible link melts) and simultaneous receipt of any one of the following signals: (a) both detector alarm signals (one of each in each zone) or, (b) either detector alarm signal in combination with loss of pressure in the dry pipe./Automatic
Standpipe and hose reel	Col. 1.4-C.8/Manual
Foam hose real	Manual
ABC hand extinguishers	Col. 1.4-C.8/Manual

(8) Fire Protection Design Criteria Employed:

(a) The function is located in a fire area which is separate from the fire areas containing equipment which provide alternate means of performing the safety or shutdown function.

(b) Fire detection and suppression capability is provided and accessible.

(c) Fire stops are provided for cable tray and piping penetrations through rated fire barriers.

(9) Consequences of Fire—The postulated fire assumes the loss of the function. The provisions for core cooling systems backup are defined in Subsection 9A.2.5.

Smoke from a fire will be removed by the EHVAC(B) system operating in its smoke removal mode. The emergency supply fan (B) will also remove smoke from the room if the diesel is running or if initiated manually.

(10) Consequences of Fire Suppression—Suppression extinguishes the fire. Refer to Section 3.4, “Water Level (Flood) Design”, for the drain system.

(11) Design Criteria Used for Protection Against Inadvertent Operation, Careless Operation or Rupture of the Suppression System:

(a) Location of the manual hose suppression system external to the room

(b) Provision of raised supports for the equipment

(c) ANSI B31.1 standpipe (rupture unlikely)

(d) Provision of cross zone detector alarms

(e) Provision of low pressure alarm in dry pipe

(f) Provision of preaction valve

(g) Provision of close head sprinkler system

(12) Fire Containment or Inhibiting Methods Employed:

(a) The functions are located in a separate fire-resistive enclosure.

(b) The means of fire detection, suppression and alarming are provided and accessible.

(13) Remarks—Although the areas surrounding the adjacent diesel generator room are of the same safety division, the diesel generator room is designated as a separate fire area due to the relatively large amounts of lubricating and fuel oil present.

9A.4.1.4.16 ECCS Valve B Room (Rm No. 421)

(1) Fire Area—F1200

(2) Equipment: See Table 9A.6-2

Safety-Related	Provides Core Cooling
Yes, D2	Yes, D2

(3) Radioactive Material Present—None that can be released as a result of fire.

(4) Qualifications of Fire Barriers—All walls serve as fire barriers and are of 3 h fire-resistive concrete construction. The rooms below (323 and 324) are in the same fire area (F1200); therefore the floor is not fire rated. The reactor containment serves as one wall to this room. A section of the ceiling, common to room 520 above, is of three hour fire-resistive concrete construction. Access to the room is provided from corridor B (Rm 420) through a 3 h fire-rated door to the corridor.

(5) Combustibles Present:

Fire Loading	Total Heat Combustion (MJ)
None	727 MJ/m^2 NCLL (727 MJ/m^2 maximum average) applies

(6) Detection Provided—Class A supervised POC in the room and manual alarm pull station at Col. 1.6-B.5 and 2.1-F.1.

(7) Suppression Available:

Type	Location/Actuation
Standpipe and hose reel	Col. 1.6-B.5 & 2.1-F.1/Manual
ABC hand extinguishers	Col. 1.6-B.5 & 2.1-F.1 /Manual

(8) Fire Protection Design Criteria Employed:

(a) The function is located in a separate fire resistive enclosure.

(b) Fire detection and suppression capability is provided and accessible.

(c) All penetrations are within a single fire area.

(9) Consequences of Fire—The postulated fire assumes the loss of the function. The provisions for core cooling systems backup are defined in Subsection 9A.2.5.

Smoke from a fire will be removed by the normal HVAC System operating in its smoke removal mode.

(10) Consequences of Fire Suppression—Suppression extinguishes the fire. Refer to Section 3.4, “Water Level (Flood) Design”, for the drain system.

(11) Design Criteria Used for Protection Against Inadvertent Operation, Careless Operation or Rupture of the Suppression System:

(a) Location of the manual suppression system external to the room

(b) Provision of raised supports for the equipment

(c) Refer to Section 3.4, “Water Level (Flood) Design”, for the drain system.

(d) ANSI B31.1 standpipe (rupture unlikely)

(12) Fire Containment or Inhibiting Methods Employed:

(a) The functions are located in a separate fire-resistive enclosure.

(b) The means of fire detection, suppression and alarming are provided and accessible.

(13) Remarks—The room contains cable in conduit only.

9A.4.1.4.17 Clean Area Access B/D (Rm No. 426)

(1) Fire Area—F3200

(2) Equipment: See Table 9A.6-2

Safety-Related	Provides Core Cooling
No	No

(3) Radioactive Material Present—None.

(4) Qualifications of Fire Barriers—The exterior wall, the wall common with the South Controlled Entry and Corridor (Rm 445), the walls common with the stair wells (Rm 329) and the elevator (Rm 328) are of 3 h fire resistive concrete construction. The floor and ceiling are not fire rated as they are internal to fire area F3400. There is a floor hatch for removal of equipment from the floor below. The exterior wall of the room has a removable section for moving equipment in and out of the reactor building. A 3 h fire resistive door provides access to this room from the Diesel Generator B room (Rm 423).

(5) Combustibles Present—No significant quantities of exposed combustibles.

(6) Detection Provided—Class A supervised POC detection system and alarm pull station in Col. 1.5-C.7

(7) Suppression Available:

Type	Location/Actuation
Standpipe and hose reel	Col. 1.5-C.7/Manual
ABC hand extinguishers	Col. 1.5-C.7/Manual

(8) Fire Protection Design Criteria Employed:

(a) The non-safety-related function is located in a separate fire resistive enclosure.

(b) Fire detection and suppression capability is provided and accessible.

(c) Fire stops are provided for cable tray and piping penetrations through rated fire barriers.

(9) Consequences of Fire—The postulated fire assumes loss of function of the room and, consequently, temporary loss of access to the B diesel generator room. Continuous access to the diesel generator room is not required. Access to diesel generator room A and C is unaffected.

Smoke from a fire will be removed by the EHVAC(B) system operating in its smoke removal mode.

(10) Consequences of Fire Suppression—Suppression extinguishes the fire. Refer to Section 3.4, "Water Level (Flood) Design", for the drain system.

(11) Design Criteria Used for Protection Against Inadvertent Operation, Careless Operation or Rupture of the Suppression System:

(a) Location of the manual suppression system internal to this non-safety-related room

(b) Refer to Section 3.4, "Water Level (Flood) Design", for the drain system.

(c) ANSI B31.1 standpipe (rupture unlikely)

(d) Alternate access routes to other areas of the reactor building are provided

(12) Fire Containment or Inhibiting Methods Employed:

(a) The functions are located in a separate fire-resistive enclosure.

(b) The means of fire detection, suppression and alarming are provided and accessible.

(13) Remarks—None

9A.4.1.4.18 E and I Penetration Room (Div 4)(Rm 444)

(1) Fire Area—F3400

(2) Equipment: See Table 9A.6-2

Safety-Related	Provides Core Cooling
Yes, D4	Yes, D4

(3) Radioactive Material Present—None that can be released as a result of fire.

(4) Qualifications of Fire Barriers—All walls and a section of the floor serve as a fire barrier between room 444 (F3400) and fire areas F1200 and F4201, and are of 3 h fire-resistive concrete construction. This remainder of the floor is internal to fire area F3400 below and is not fire rated. The ceiling is internal to fire area F3400 and therefore is nonrated. The containment serves as one wall of the room. Access to the room is provided from corridor D (Rm 445) through a 3 h fire-resistive door.

(5) Combustibles Present:

Fire Loading	Total Heat of Combustion (MJ)
Cable Tray	1454 MJ/m^2 NCLL (1454 MJ/m^2 maximum average) applies

(6) Detection Provided—Class A supervised POC in the room and manual alarm pull station at Col. 1.6-B.8 and 2.1-F.1.

(7) Suppression Available:

Type	Location/Actuation
Standpipe and hose reel	Col. 1.6-B.8 & 2.1-F.1/Manual
ABC hand extinguishers	Col. 1.6-B.8 & 2.1-F.1/Manual

(8) Fire Protection Design Criteria Employed:

(a) The function is located in a separate fire resistive enclosure.

(b) Fire detection and suppression capability is provided and accessible.

(c) Fire stops are provided for piping penetrations through rated fire barriers.

(9) Consequences of Fire—The postulated fire assumes the loss of the function. The provisions for core cooling systems backup are defined in Subsection 9A.2.5.

Smoke from a fire will be removed by the normal HVAC System operating in its smoke removal mode.

(10) Consequences of Fire Suppression—Suppression extinguishes the fire. Refer to Section 3.4, "Water Level (Flood) Design", for the drain system.

(11) Design Criteria Used for Protection Against Inadvertent Operation, Careless Operation or Rupture of the Suppression System:

(a) Location of the manual suppression system external to the room

(b) Provision of raised supports for the equipment

(c) Refer to Section 3.4, "Water Level (Flood) Design", for the drain system.

(d) ANSI B31.1 standpipe (rupture unlikely)

(12) Fire Containment or Inhibiting Methods Employed:

(a) The functions are located in a separate fire-resistive enclosure.

(b) The means of fire detection, suppression and alarming are provided and accessible.

(13) Remarks—Cabling to the room is routed in embedded conduit to give an equivalent of a 3 h fire-rating for the separation between the Division 4 cables and other plant cabling.

9A.4.1.4.19 South Controlled Entry and Corridor (Rm No. 445)

(1) Fire Area—F4201

(2) Equipment: See Table 9A.6-2

Safety-Related	Provides Core Cooling
No	No

(3) Radioactive Material Present—None that can be released as a result of fire.

(4) Qualifications of Fire Barriers—The wall common with the Clean Area Access Room (Rm 426), the division 4 electrical penetration room (Rm No.444) and the floor are of 3 h fire-resistive concrete construction. The remainder of the

walls are concrete and are not rated as they are internal to fire area F4201. A portion of the ceiling is of 3 h fire-resistive concrete construction to maintain separation between fire area F4201 (Rm 445) and fire area F3200 in rooms 527 and 541 above. There is not a fire barrier between this corridor and Corridor B (Rm 420). There are nonrated doors from this corridor to the Filter/ Demineralizer Pre Coat Room (Rm 446), the Filter/Demineralizer Access Room (Rm 447), and the CUW Valve Room (Rm 443).

(5) Combustibles Present:

Fire Loading	Total Heat of Combustion (MJ)
Cable Tray	727 MJ/m^2 NCLL (727 MJ/m^2 maximum average) applies

(6) Detection Provided—Class A supervised POC in the room and manual alarm pull station at Col. 1.6-B.8 and 2.1-F.1.

(7) Suppression Available:

Type	Location/Actuation
Standpipe and hose reel	Col. 1.6-B.8 & 2.1-F.1/Manual
ABC hand extinguishers	Col. 1.6-B.8 & 2.1-F.1/Manual

(8) Fire Protection Design Criteria Employed:

(a) The non-safety-related function is located in a separate fire resistive enclosure.

(b) Fire detection and suppression capability is provided and accessible.

(c) Fire stops are provided for cable tray and piping penetrations through rated fire barriers.

(9) Consequences of Fire—The postulated fire assumes the loss of the function. Alternate entry is provided by Controlled Entry and Corridor A (Rm 410) Access to the corridor is from either end.

Smoke from a fire will be removed by the normal HVAC System operating in its smoke removal mode.

(10) Consequences of Fire Suppression—Suppression extinguishes the fire. Refer to Section 3.4, “Water Level (Flood) Design”, for the drain system.

(11) Design Criteria Used for Protection Against Inadvertent Operation, Careless Operation or Rupture of the Suppression System:

(a) Location of the manual suppression system in this non-safety-related room, external to the rooms containing safety-related equipment

(b) Provision of raised supports for the equipment

(c) Refer to Section 3.4, "Water Level (Flood) Design", for the drain system.

(d) ANSI B31.1 standpipe (rupture unlikely)

(12) Fire Containment or Inhibiting Methods Employed:

(a) The functions are located in a separate fire-resistive enclosure.

(b) The means of fire detection, suppression and alarming are provided and accessible.

(13) Remarks—None.

9A.4.1.4.20 CUW valve room (Rm No. 443)

(1) Fire Area—F4201

(2) Equipment: See Table 9A.6-2

Safety-Related	Provides Core Cooling
Yes	No

(3) Radioactive Material Present—None that can be released as a result of fire.

(4) Qualifications of Fire Barriers—The floor is of 3 h fire-resistive concrete construction. The wall common to room 444 (F3400) is of 3 h fire-resistive concrete construction. The remaining walls and ceiling are concrete and are not rated as they are internal to fire area F4201. The containment serves as one wall of the room. Access to the room is provided from corridor D (Rm 447) through a non fire rated door.

(5) Combustibles Present:

Fire Loading	Total Heat of Combustion (MJ)
Cable Tray	727 MJ/m^2 NCLL (727 MJ/m^2 maximum average) applies

(6) Detection Provided—Class A supervised POC in the room and manual alarm pull station at Col. 1.6-B.8 and 2.1-F.1.

(7) Suppression Available:

Type	Location/Actuation
Standpipe and hose reel	Col. 1.6-B.8 & 2.1-F.1/Manual
ABC hand extinguishers	Col. 1.6-B.8 & 2.1-F.1/Manual

(8) Fire Protection Design Criteria Employed:

(a) The function is located in a separate fire resistive enclosure.

(b) Fire detection and suppression capability is provided and accessible.

(9) Consequences of Fire—The postulated fire assumes the loss of the function. Inboard isolation valves provide alternate means of isolation.

Smoke from a fire will be removed by the normal HVAC System operating in its smoke removal mode.

(10) Consequences of Fire Suppression—Suppression extinguishes the fire. Refer to Section 3.4, “Water Level (Flood) Design”, for the drain system.

(11) Design Criteria Used for Protection Against Inadvertent Operation, Careless Operation or Rupture of the Suppression System:

(a) Location of the manual suppression system external to the room

(b) Provision of raised supports for the equipment

(c) Refer to Section 3.4, “Water Level (Flood) Design”, for the drain system.

(d) ANSI B31.1 standpipe (rupture unlikely)

(12) Fire Containment or Inhibiting Methods Employed:

(a) The functions are located in a separate fire-resistive enclosure.

(a) The means of fire detection, suppression and alarming are provided and accessible.

(13) Remarks—None.

9A.4.1.4.21 Not Used

9A.4.1.4.22 PASS Rack Room (Rm No. 441)

(1) Fire Area—F4201

(2) Equipment: See Table 9A.6-2

Safety-Related	Provides Core Cooling
No	No

(3) Radioactive Material Present—None.

(4) Qualifications of Fire Barriers—The building exterior wall, the wall common with the steam tunnel and the floor are of 3 h fire-resistive concrete construction. The remainder of the walls and ceiling are concrete and are not rated as they are internal to fire area F4201. Entry and egress to the room is from the control building.

(5) Combustibles Present:

Fire Loading	Total Heat of Combustion (MJ)
None	727 MJ/m^2 NCLL (727 MJ/m^2 maximum average) applies

(6) Detection Provided—Class A supervised POC in the room and manual alarm pull stations at Col. 2.9-A.0.

(7) Suppression Available:

Type	Location/Actuation
Standpipe and hose reel	Control building 4.0-K.9/ El. 12300/Manual
ABC hand extinguishers	Control building 4.0-K.9/ El. 12300/Manual

(8) Fire Protection Design Criteria Employed:

(a) The non-safety-related function is located in a separate fire resistive enclosure.

(b) Fire detection and suppression capability is provided and accessible.

(c) Fire stops are provided for cable tray and piping penetrations through rated fire barriers.

(9) Consequences of Fire—The postulated fire assumes the loss of the function.

Smoke from a fire will be removed by the normal HVAC System operating in its smoke removal mode.

(10) Consequences of Fire Suppression—Suppression extinguishes the fire. Refer to Section 3.4, "Water Level (Flood) Design", for the drain system.

(11) Design Criteria Used for Protection Against Inadvertent Operation, Careless Operation or Rupture of the Suppression System:

(a) Location of the manual suppression system is in the control building on the 12300 elevation in a passageway (Rm 506) near the PASS room (Rm 441)

(b) Provision of raised supports for the equipment

(c) Refer to Section 3.4, "Water Level (Flood) Design", for the drain system.

(d) ANSI B31.1 standpipe (rupture unlikely)

(12) Fire Containment or Inhibiting Methods Employed:

(a) The functions are located in a separate fire-resistive enclosure.

(b) The means of fire detection, suppression and alarming are provided and accessible.

(13) Remarks—None

9A.4.1.4.23 Filter/Demineralizer Access Room (Rm No. 447)

(1) Fire Area—F4201

(2) Equipment: See Table 9A.6-2

Safety-Related	Provides Core Cooling
No	No

(3) Radioactive Material Present—None that can be released as a result of fire.

(4) Qualifications of Fire Barriers—The floor and the wall common to the pipe space serve as fire barriers and are of 3 h fire-resistive concrete construction. The remainder of the walls are concrete and are not rated as they are internal to fire area F4201. Access to the room is provided from Corridor D (part of Rm 445) through a nonrated door.

(5) Combustibles Present:

Fire Loading	Total Heat of Combustion (MJ)
Cable Tray	727 MJ/m^2 NCLL (727 MJ/m^2 maximum average) applies

(6) Detection Provided—Class A supervised POC in the room and manual alarm pull stations at Col. 1.6-B.8.

(7) Suppression Available:

Type	Location/Actuation
Standpipe and hose reel	Col. 1.6-B.8/Manual
ABC hand extinguishers	Col. 1.6-B.8/Manual

(8) Fire Protection Design Criteria Employed:

(a) The function is located in a separate fire resistive enclosure.

(b) Fire detection and suppression capability is provided and accessible.

(c) Fire stops are provided for cable tray and piping penetrations through rated fire barriers.

(9) Consequences of Fire—The postulated fire assumes the loss of the function. The function is not safety-related.

Smoke from a fire will be removed by the normal HVAC System operating in its smoke removal mode.

(10) Consequences of Fire Suppression—Suppression extinguishes the fire. Refer to Section 3.4, “Water Level (Flood) Design”, for the drain system.

(11) Design Criteria Used for Protection Against Inadvertent Operation, Careless Operation or Rupture of the Suppression System:

(a) Location of the manual suppression system external to the room

(b) Provision of raised supports for the equipment

(c) Refer to Section 3.4, "Water Level (Flood) Design", for the drain system.

(d) ANSI B31.1 standpipe (rupture unlikely)

(12) Fire Containment or Inhibiting Methods Employed:

(a) The functions are located in a separate fire-resistive enclosure.

(b) The means of fire detection, suppression and alarming are provided and accessible.

(13) Remarks—None.

9A.4.1.4.24 Filter/Demineralizer Pre Coat Room (Rm No. 441)

(1) Fire Area—F4201

(2) Equipment: See Table 9A.6-2

Safety-Related	Provides Core Cooling
No	No

(3) Radioactive Material Present—None.

(4) Qualifications of Fire Barriers—The floor and the reactor building outside wall are of 3 h fire-resistive concrete construction. The remainder of the walls and ceiling are concrete and are not rated as they are internal to fire area F4201. Access is provided from Corridor D (part of Rm 445) through a nonrated door.

(5) Combustibles Present:

Fire Loading	Total Heat of Combustion (MJ)
Cable Tray	727 MJ/m^2 NCLL (727 MJ/m^2 maximum average) applies

(6) Detection Provided—Class A supervised POC in the room and manual alarm pull station at Col. 1.5-B.8.

(7) Suppression Available:

Type	Location/Actuation
Standpipe and hose reel	Col. 1.6-B.8/Manual
ABC hand extinguishers	Col. 1.6-B.8/Manual

(8) Fire Protection Design Criteria Employed:

(a) The function is located in a separate fire resistive enclosure.

(b) Fire detection and suppression capability is provided and accessible.

(c) Fire stops are provided for cable tray and piping penetrations through rated fire barriers.

(9) Consequences of Fire—The postulated fire assumes the loss of the function, which is not safety-related. Loss of this non-safety-related function is acceptable.

Smoke from a fire will be removed by the normal HVAC System operating in its smoke removal mode.

(10) Consequences of Fire Suppression—Suppression extinguishes the fire. Refer to Section 3.4, “Water Level (Flood) Design”, for the drain system.

(11) Design Criteria Used for Protection Against Inadvertent Operation, Careless Operation or Rupture of the Suppression System:

(a) Location of the manual suppression system in rooms external to the rooms containing safety-related equipment

(b) Provision of raised supports for the equipment

(c) Refer to Section 3.4, “Water Level (Flood) Design”, for the drain system.

(d) ANSI B31.1 standpipe (rupture unlikely)

(12) Fire Containment or Inhibiting Methods Employed:

(a) The functions are located in a separate fire-resistive enclosure.

(b) The means of fire detection, suppression and alarming are provided and accessible.

(13) Remarks—None

9A.4.1.4.25 Not Used

9A.4.1.4.26 Steam Tunnel (Rm No. 440)

(1) Fire Area—F4900

(2) Equipment: See Table 9A.6-2

Safety-Related	Provides Core Cooling
Yes, D1, D2	Yes, D1, D2, D33 & ND

(3) Radioactive Material Present—None.

(4) Qualifications of Fire Barriers—The floor, walls and ceiling are of 3 h fire-resistive concrete construction. One wall is formed by the containment. The tunnel passes through the control building to the turbine building where a vent shaft is provided. A ventilation control panel is provided at the wall of the reactor building. There are blowout panels for venting secondary containment located in the walls of the tunnel in the reactor building. Personnel entry to the steam tunnel is through a shield door at floor elevation 18100 mm.

(5) Combustibles Present:

Fire Loading	Total Heat of Combustion (MJ)
Cable Tray	727 MJ/m^2 NCLL (727 MJ/m^2 maximum average) applies

(6) Detection Provided—Class A supervised POC in the tunnel and manual alarm pull station at Col. 5.3-B.0, floor elevation 18100 mm.

(7) Suppression Available:

Type	Location/Actuation
Standpipe and hose reel	Control building 5.3-B.0/ El. 18100 mm/Manual
ABC hand extinguishers	Control building 5.3-B.0/ El. 18100 mm/Manual

(8) Fire Protection Design Criteria Employed:

(a) The function is located in a separate fire resistive enclosure.

(b) Fire detection and suppression capability is provided and accessible.

(c) Fire stops are provided for cable tray and piping penetrations through rated fire barriers.

(9) Consequences of Fire—The postulated fire assumes the loss of the function. The valves are spatially separated and are designed to fail closed on loss of actuation power. The provisions for core cooling systems backup are discussed in Subsection 9A.2.5.

Smoke from a fire will be removed by the normal HVAC System operating in its smoke removal mode.

(10) Consequences of Fire Suppression—Suppression extinguishes the fire. Refer to Section 3.4, "Water Level (Flood) Design", for the drain system.

(11) Design Criteria Used for Protection Against Inadvertent Operation, Careless Operation or Rupture of the Suppression System.

(a) Location of the manual suppression system in rooms external to the rooms containing safety-related equipment

(b) Provision of raised supports for the equipment

(c) Refer to Section 3.4, "Water Level (Flood) Design", for the drain system.

(d) ANSI B31.1 standpipe (rupture unlikely)

(12) Fire Containment or Inhibiting Methods Employed:

(a) The functions are located in a separate fire-resistive enclosure.

(b) The means of fire detection, suppression and alarming are provided and accessible.

(13) Remarks—None

9A.4.1.4.27 Flammability Control System Room (Rm No 425)

(1) Fire Area—F4230

(2) Equipment: See Table 9A.6-2

Safety-Related	Provides Core Cooling
Yes, D2	No

(3) Radioactive Material Present—None that can be released as a result of fire.

(4) Qualifications of Fire Barriers—The floor and interior and exterior walls are fire barriers and are of 3 h fire-resistive concrete construction. The ceiling is formed by the bottom of the spent fuel storage pool (F4301) and is a 3 h fire barrier. Access to the room is provided from Corridor B (Rm 420) through with a three hour fire-rated door.

(5) Combustibles Present:

Fire Loading	Total Heat of Combustion (MJ)
Cable Tray	727 MJ/m^2 NCLL (727 MJ/m^2 maximum average) applies

(6) Detection Provided—Class A supervised POC in the room and manual alarm pull station at Col. 2.1-F.1.

(7) Suppression Available:

Type	Location/Actuation
Standpipe and hose reel	Col. 2.1-F.1/Manual
ABC hand extinguishers	Col. 2.1-F.1/Manual

(8) Fire Protection Design Criteria Employed:

(a) The function is located in a separate fire resistive enclosure.

(b) Fire detection and suppression capability is provided and accessible.

(9) Consequences of Fire—The postulated fire assumes the loss of the function.

Smoke from a fire will be removed by the EHVAC(B) system operating in its smoke removal mode.

(10) Consequences of Fire Suppression—Suppression extinguishes the fire. Refer to Section 3.4, “Water Level (Flood) Design”, for the drain system.

(11) Design Criteria Used for Protection Against Inadvertent Operation, Careless Operation or Rupture of the Suppression System:

(a) Location of the manual suppression system external to the room

(b) Provision of raised supports for the equipment

(c) Refer to Section 3.4, "Water Level (Flood) Design", for the drain system.

(d) ANSI B31.1 standpipe (rupture unlikely)

(12) Fire Containment or Inhibiting Methods Employed:

(a) The functions are located in a separate fire-resistive enclosure.

(b) The means of fire detection, suppression and alarming are provided and accessible.

(13) Remarks—None.

9A.4.1.4.28 E and I Electrical Penetration Room (Rm No. 435)

(1) Fire Area—F4301

(2) Equipment: See Table 9A.6-2

Safety-Related	Provides Core Cooling
Yes, D3	No

(3) Radioactive Material Present—None.

(4) Qualifications of Fire Barriers—The containment serves as one wall of the room. The wall common to room 424 (F4201) and the floor are of 3 h fire-resistive concrete construction. The remaining walls are concrete and are not rated as they are internal to fire area F4310. The ceiling is formed by the bottom of the spent fuel storage pool. A nonrated door provides entry and egress to the room from corridor C (room 430).

(5) Combustibles Present:

Fire Loading	Total Heat of Combustion (MJ)
Cable Tray	1454 MJ/m^2 NCLL (1454 MJ/m^2 maximum average) applies

(6) Detection Provided—Class A supervised POC in the room and manual alarm pull stations at Col. 5.9-F.2.

(7) Suppression Available:

Type	Location/Actuation
Standpipe and hose reel	Col. 5.9-F.2/Manual
ABC hand extinguishers	Col. 5.9-F.2/ Manual

(8) Fire Protection Design Criteria Employed:

(a) The non-safety-related function is located in a separate fire resistive enclosure.

(b) Fire detection and suppression capability is provided and accessible.

(c) Fire stops are provided for cable tray and piping penetrations through rated fire barriers.

(9) Consequences of Fire—The postulated fire assumes the loss of the function.

Smoke from a fire will be removed by the normal HVAC System operating in its smoke removal mode.

(10) Consequences of Fire Suppression—Suppression extinguishes the fire. Refer to Section 3.4, “Water Level (Flood) Design”, for the drain system.

(11) Design Criteria Used for Protection Against Inadvertent Operation, Careless Operation or Rupture of the Suppression System:

(a) Location of the manual suppression system for this safety-related room is external

(b) Provision of raised supports for the equipment

(c) Refer to Section 3.4, “Water Level (Flood) Design”, for the drain system.

(d) ANSI B31.1 standpipe (rupture unlikely)

(12) Fire Containment or Inhibiting Methods Employed:

(a) The functions are located in a separate fire-resistive enclosure.

(b) The means of fire detection, suppression and alarming are provided and accessible.

(13) Remarks—None

9A.4.1.5 Building—Reactor Bldg El 18100 mm

9A.4.1.5.1 Corridor A (Rm No. 510)

(1) Fire Area—F4101

(2) Equipment: See Table 9A.6-2

Safety-Related	Provides Core Cooling
Yes, D1	Yes, D1

(3) Radioactive Material Present—None that can be released as a result of fire.

(4) Qualifications of Fire Barriers—The walls common with the steam tunnel (Rm 440), stairwell (Rm 195), elevator (Rm 192), D/G HVAC and fan A room (Rm 514), D/G A control panel room (Rm 516), division 1 electrical penetration room (518) and the clean area access room (517) serve as fire barriers between adjacent fire areas and are of 3 h fire-resistive concrete construction. The remainder of the walls and the floor are concrete and are not rated as they are internal to fire area F4101. The ceiling is fire resistant and part of the wall is formed by the containment. Also, part of the wall in common with the steam tunnel is a blow out panel for pressure relief in the event of pressurization of secondary containment. Access to the corridor is provided from the stair and elevator via 3 h fire-resistive doors. The corridor provides direct access to the steam tunnel entry room (Rm 512) via a vestibule and non fire rated door. A three hour fire-resistive door provides entry to and egress from corridor C (Rm No 530). The room is divided into two compartments by a non rated wall and door at row A.5.

(5) Combustibles Present:

Fire Loading	Total Heat of Combustion (MJ)
Cable Tray	727 MJ/m^2 NCLL (727 MJ/m^2 maximum average) applies

(6) Detection Provided—Class A supervised POC in the room and manual alarm pull stations at 5.5-A.9

(7) Suppression Available:

Type	Location/Actuation
Standpipe and hose reel	Col. 5.5-A.9/Manual
ABC hand extinguishers	Col. 5.3-A.9/ Manual

(8) Fire Protection Design Criteria Employed:

(a) The function is located in a separate fire resistive enclosure.

(b) Fire detection and suppression capability is provided and accessible.

(c) Fire stops are provided for cable tray and piping penetrations through rated fire barriers.

(d) All penetrations are within a single fire area.

(9) Consequences of Fire—The postulated fire assumes the loss of the function. The provisions for core cooling systems backup are defined in Subsection 9A.2.5.

Smoke from a fire will be removed by the normal HVAC System operating in its smoke removal mode.

(10) Consequences of Fire Suppression—Suppression extinguishes the fire. Refer to Section 3.4, “Water Level (Flood) Design”, for the drain system.

(11) Design Criteria Used for Protection Against Inadvertent Operation, Careless Operation or Rupture of the Suppression System:

(a) Location of the manual suppression system in the corridor, external to the rooms containing the main safety-related equipment

(a) Provision of raised supports for the equipment

(b) Refer to Section 3.4, “Water Level (Flood) Design”, for the drain system.

(c) ANSI B31.1 standpipe (rupture unlikely)

(12) Fire Containment or Inhibiting Methods Employed:

(a) The functions are located in a separate fire-resistive enclosure.

(b) The means of fire detection, suppression and alarming are provided and accessible.

(13) Remarks—None

9A.4.1.5.2 D/G Fan and HVAC Room (Rm No. 514)

(1) Fire Area—F4100

(2) Equipment: See Table 9A.6-2

Safety-Related	Provides Core Cooling
Yes, D1	Yes, D1

(3) Radioactive Material Present—None.

(4) Qualifications of Fire Barriers—The exterior wall, the walls common to stairwell (Rm 292), the D/G Exhaust Duct A (Rm 515), the D/G Control Panel A (Rm 516), and corridor A (Rm 510) serve as a fire barrier and is of 3 h fire-resistive concrete construction. The floor is internal to fire area F4100 and is not fire rated. Portion of the ceiling common to fire areas F4102 (Rm 613) and F6101 (Rm 610) is of a 3 h fire-resistive concrete construction. The remaining portion of the ceiling is internal to fire area F4100 and is not fire rated.

(5) Combustibles Present:

Fire Loading	Total Heat of Combustion (MJ)
Cable Tray	727 MJ/m^2 NCLL (727 MJ/m^2 maximum average) applies.
Fuel Oil	Could be variable due to possible fuel oil leaks in lines passing through this room.

(6) Detection Provided—Class A supervised POC in the room and manual alarm pull station at Col. 6.3-C.2.

(7) Suppression Available:

Type	Location/Actuation
Standpipe and hose reel	Col. 6.3-C.1 & 6.3-D.2/Manual
ABC hand extinguishers	Col. 6.3-C.1 & 6.3-D.2/Manual

(8) Fire Protection Design Criteria Employed:

(a) The function is located in a fire area which is separate from the fire areas containing equipment providing alternate means of performing the safety or shutdown function.

(b) Fire detection and suppression capability is provided and accessible.

(c) Fire stops are provided for cable tray and piping penetrations through rated fire barriers.

(9) Consequences of Fire—The postulated fire assumes the loss of the function. The provisions for core cooling systems backup are defined in Subsection 9A.2.5.

Smoke from a fire will be removed by the EHVAC(A) system operating in its smoke removal mode. The emergency supply fan (A) will also remove smoke from the room if the diesel is running or if initiated manually.

(10) Consequences of Fire Suppression—Suppression extinguishes the fire. Refer to Section 3.4, “Water Level (Flood) Design”, for the drain system.

(11) Design Criteria Used for Protection Against Inadvertent Operation, Careless Operation or Rupture of the Suppression System:

(a) Location of the manual hose suppression system external to the room

(b) Provision of raised supports for the equipment

(c) Refer to Section 3.4, “Water Level (Flood) Design”, for the drain system.

(d) ANSI B31.1 standpipe (rupture unlikely)

(12) Fire Containment or Inhibiting Methods Employed:

(a) The functions are located in a separate fire-resistive enclosure.

(a) The means of fire detection, suppression and alarming are provided and accessible.

(13) Remarks—Due to the large ventilation openings in the floor, this room must be considered as an extension of the diesel generator room below.

9A.4.1.5.3 Exhaust Duct A (Room 515)

(1) Fire Area F4100

(2) Equipment: See Table 9A.6-2

Safety-Related	Provides Core Cooling
Yes, D1	Yes, D1

(3) Radioactive Material Present—None.

(4) Qualifications of Fire Barriers—The room has a large ventilation opening to the outside and is not fire rated. The second exterior wall, the walls common with D/G Fan and HVAC Room (Rm 514), and the D/G Control Panel A (Rm 516) serve as a fire barrier and is of 3 h fire-resistive concrete construction. The remaining walls, the floor and ceiling are of concrete construction but are not fire rated as they are internal to fire area F4100.

(5) Combustibles Present:

Fire Loading	Total Heat of Combustion (MJ)
None	727 MJ/m^2 NCLL (727 MJ/m^2 maximum average) applies

(6) Detection Provided—manual alarm pull station at Col. 6.3-C.2

(7) Suppression Available:

Type	Location/Actuation
Standpipe and hose reel	Col. 6.3-C.2/Manual
ABC hand extinguishers	Col. 6.3-C.2/Manual

(8) Fire Protection Design Criteria Employed:

(a) The function is located in a fire area which is separate from the fire areas containing equipment providing alternate means of performing the safety or shutdown function.

(b) Fire detection and suppression capability is provided and accessible.

(c) Fire stops are provided for cable tray and piping penetrations through rated fire barriers.

(9) Consequences of Fire—The postulated fire assumes the loss of the function. The provisions for core cooling systems backup are defined in Subsection 9A.2.5.

The emergency supply fan (A) will remove smoke from the room if the diesel is running or if initiated manually. The room is also vented directly outside of the building by the large ventilation opening in the wall.

(10) Consequences of Fire Suppression—Suppression extinguishes the fire. Refer to Section 3.4, "Water Level (Flood) Design", for the drain system.

(11) Design Criteria Used for Protection Against Inadvertent Operation, Careless Operation or Rupture of the Suppression System:

(a) Location of the manual hose suppression system external to the room

(b) Provision of raised supports for the equipment

(c) Refer to Section 3.4, "Water Level (Flood) Design", for the drain system.

(d) ANSI B31.1 standpipe (rupture unlikely)

(12) Fire Containment or Inhibiting Methods Employed:

(a) The functions are located in a separate fire-resistive enclosure.

(b) The means of fire detection, suppression and alarming are provided and accessible.

(13) Remarks—Due to the large ventilation openings in the floor, this room must be considered as an extension of the diesel generator room below. There is a damper for confining the carbon dioxide to the diesel generator room during fire suppression activities.

9A.4.1.5.4 DG Control Panel A (Room 516)

(1) Fire Area—F4102

(2) Equipment: See Table 9A.6-2

Safety-Related	Provides Core Cooling
Yes, D1	Yes, D1

(3) Radioactive Material Present—None.

(4) Qualifications of Fire Barriers—The exterior wall, the walls common to corridor A (Rm 510), the D/G Fan and HVAC room (Rm 514), and the D/G Exhaust Duct A (Rm 515) are of 3 h fire-resistive concrete construction. A section of the ceiling common to fire area F4100 above (Rm 612) and the entire floor are of 3 h fire-resistive construction. The remainder of the ceiling is internal to fire area F4102 and is not fire rated. There is a 3 h fire-resistive door that provides access from the clean area access room (Rm 517) to the D/G (A) control panel room (Rm 516).

(5) Combustibles Present—No significant quantities of exposed combustibles. 727 MJ/m^2 NCLL (727 MJ/m^2 maximum average) applies.

(6) Detection Provided—Class A supervised POC detection system and alarm pull station at 6.3-C.2 and 6.3-D.2.

(7) Suppression Available:

Type	Location/Actuation
Standpipe and hose reel	6.3-C.2, 6.3-D.2/Manual
ABC hand extinguishers	6.3-C.2, 6.3-D.2/Manual

(8) Fire Protection Design Criteria Employed:

(a) The non-safety-related function is located in a separate fire resistive enclosure.

(b) Fire detection and suppression capability is provided and accessible.

(c) Fire stops are provided for cable tray and piping penetrations through rated fire barriers.

(9) Consequences of Fire—The postulated fire assumes loss of function of the room and, consequently, temporary loss of access to the A diesel generator HVAC room. Continuous access to the diesel generator HVAC room is not required. Functional backup is provided by diesel generators B and C.

Smoke from a fire will be removed by the EHVAC(A) system operating in its smoke removal mode.

(10) Consequences of Fire Suppression—Suppression extinguishes the fire. Refer to Section 3.4, “Water Level (Flood) Design”, for the drain system.

(11) Design Criteria Used for Protection Against Inadvertent Operation, Careless Operation or Rupture of the Suppression System:

(a) Location of the manual suppression system internal to this non-safety-related room

(b) Refer to Section 3.4, "Water Level (Flood) Design", for the drain system.

(c) ANSI B31.1 standpipe (rupture unlikely)

(d) Alternate access routes to other areas of the reactor building are provided

(12) Fire Containment or Inhibiting Methods Employed:

(a) The functions are located in a separate fire-resistive enclosure.

(b) The means of fire detection, suppression and alarming are provided and accessible.

(13) Remarks—None

9A.4.1.5.5 Steam Tunnel Entry Room (Rm No. 512)

(1) Fire Area—F4101

(2) Equipment: See Table 9A.6-2

Safety-Related	Provides Core Cooling
No	No

(3) Radioactive Material Present—None that can be released as a result of fire.

(4) Qualifications of Fire Barriers—The ceiling and wall common to steam tunnel room (Rm 440) are fire barriers and are of 3 h fire-resistive concrete construction. The floor and remaining walls are internal to fire area F4101 and are not fire rated. There is a hatch in the ceiling for removal of equipment. Access is from corridor A, through a vestibule and non-fire rated door. Access to the steam tunnel from this room is provided via a 3 h fire-rated door. The room is also the access passage to the Division 1 E and I Penetration Room (Rm 512) via a non rated door.

(5) Combustibles Present:

Fire Loading	Total Heat of Combustion (MJ)
Cable Tray	727 MJ/m^2 NCLL (727 MJ/m^2 maximum average) applies

(6) Detection Provided—Class A supervised POC in the room and manual alarm pull stations at 5.5-A.9.

(7) Suppression Available:

Type	Location/Actuation
Standpipe and hose reel	Col. 5.5-A.9/Manual
ABC hand extinguishers	Col. 5.5-A.9/ Manual

(8) Fire Protection Design Criteria Employed:

(a) The function is located in a separate fire resistive enclosure.

(b) Fire detection and suppression capability is provided and accessible.

(c) Fire stops are provided for cable tray and piping penetrations through rated fire barriers.

(d) All penetrations are within a single fire area.

(9) Consequences of Fire—The postulated fire assumes the temporary loss of the function. Temporary loss of access to the steam tunnel is acceptable.

Smoke from a fire will be removed by the normal HVAC System operating in its smoke removal mode.

(10) Consequences of Fire Suppression—Suppression extinguishes the fire. Refer to Section 3.4, “Water Level (Flood) Design”, for the drain system.

(11) Design Criteria Used for Protection Against Inadvertent Operation, Careless Operation or Rupture of the Suppression System:

(a) Location of the manual suppression system in the corridor, external to the rooms containing the main safety-related equipment

(b) Provision of raised supports for the equipment

(c) Refer to Section 3.4, “Water Level (Flood) Design”, for the drain system.

(d) ANSI B31.1 standpipe (rupture unlikely)

(12) Fire Containment or Inhibiting Methods Employed:

(a) The functions are located in a separate fire-resistive enclosure.

(b) The means of fire detection, suppression and alarming are provided and accessible.

(13) Remarks—None

9A.4.1.5.6 Corridor C (Rm No. 530)

(1) Fire Area—F4301

(2) Equipment: See Table 9A.6-2

Safety-Related	Provides Core Cooling
Yes, D3	No

(3) Radioactive Material Present—None that can be released as a result of fire.

(4) Qualifications of Fire Barriers—One wall of the room is formed by the containment. The walls common to room 531 are internal to fire area F4301 and therefore are not fire rated. The remaining walls between corridor C and rooms 532 (division 3 electrical penetration room), 517 (access area A/C), 533 (D/G C fan room) and 536 (D/G C control panel room) serve as fire barriers and are of 3 h fire-resistive concrete construction. A section of the floor and ceiling are common to fire areas F1300 below and F3300 above and are of 3 h fire-resistive concrete construction. The remainder of the floor and ceiling are concrete and not rated because they are internal to fire area F4301. Access to corridor C is provided from corridor A via a 3 h fire-resistive door. Room 530 also contains a large equipment hatch open to the floor above and below.

(5) Combustibles Present:

Fire Loading	Total Heat of Combustion (MJ)
Lubricating Oil and Fuel Oil	Could be variable due to possible lubricant, and fuel oil leaks in transient. Deluge sprinkler system provided.

(6) Detection Provided—Class A supervised POC in the room and manual alarm pull station at Col. 5.5-A.9 and 5.9-F.2.

(7) Suppression Available:

Type	Location/Actuation
Standpipe and hose reel	Col. 5.5-A.9 & 5.9-F.2/Manual
ABC hand extinguishers	Col. 5.5-A.9 & 5.9-F.2/ Manual

(8) Fire Protection Design Criteria Employed:

(a) The function is located in a separate fire resistive enclosure.

(b) Fire detection and suppression capability is provided and accessible.

(c) All penetrations are within a single fire area.

(9) Consequences of Fire—The postulated fire assumes the loss of the function. The provisions for core cooling systems backup are defined in Subsection 9A.2.5.

Smoke from a fire will be removed by the normal HVAC System operating in its smoke removal mode.

(10) Consequences of Fire Suppression—Suppression extinguishes the fire. Refer to Section 3.4, “Water Level (Flood) Design”, for the drain system.

(11) Design Criteria Used for Protection Against Inadvertent Operation, Careless Operation or Rupture of the Suppression System:

(a) Location of the manual suppression system external to the room

(b) Provision of raised supports for the equipment

(c) Refer to Section 3.4, “Water Level (Flood) Design”, for the drain system.

(d) ANSI B31.1 standpipe (rupture unlikely)

(12) Fire Containment or Inhibiting Methods Employed:

(a) The functions are located in a separate fire-resistive enclosure.

(b) The means of fire detection, suppression and alarming are provided and accessible.

(13) Remarks—Sprinklers have been provided on the basis that the fire loading in this area could be highly variable as equipment and material are moved in and out of the upper drywell during maintenance.

9A.4.1.5.7 U/D Equipment Hatch (Rm No. 531)

(1) Fire Area—F4301

(2) Equipment: See Table 9A.6-2

Safety-Related	Provides Core Cooling
No	No

(3) Radioactive Material Present—None that can be released as a result of fire.

(4) Qualifications of Fire Barriers—The walls are concrete and are not rated as they are internal to fire area F4301. The containment serves as one wall of the room. Access to the room is provided from Corridor C (Rm No. 535) via a 3 h fire-resistive door. A nonrated sliding shielding door is provided for the transfer of large equipment through the room.

(5) Combustibles Present:

Fire Loading	Total Heat of Combustion (MJ)
None	727 MJ/m^2 NCLL (727 MJ/m^2 maximum average) applies

(6) Detection Provided—Class A supervised POC in the room and manual alarm pull station at Col. 5.9-F.2 and 5.5-A.9.

(7) Suppression Available:

Type	Location/Actuation
Standpipe and hose reel	Col. 5.9-F.2 & 5.5-A.9/Manual
ABC hand extinguishers	Col. 5.9-F.2 & 5.5-A.9/ Manual

(8) Fire Protection Design Criteria Employed:

(a) The function is located in a separate fire resistive enclosure.

(b) Fire detection and suppression capability is provided and accessible.

(c) Fire stops are provided for cable tray and piping penetrations through rated fire barriers.

(9) Consequences of Fire—The postulated fire assumes the loss of the function. The function is not safety-related.

Smoke from a fire will be removed by the normal HVAC System operating in its smoke removal mode.

(10) Consequences of Fire Suppression—Suppression extinguishes the fire. Refer to Section 3.4, "Water Level (Flood) Design", for the drain system.

(11) Design Criteria Used for Protection Against Inadvertent Operation, Careless Operation or Rupture of the Suppression System:

(a) Location of the manual suppression system external to the room

(b) Provision of raised supports for the equipment

(c) Refer to Section 3.4, "Water Level (Flood) Design", for the drain system.

(d) ANSI B31.1 standpipe (rupture unlikely)

(12) Fire Containment or Inhibiting Methods Employed:

(a) The functions are located in a separate fire-resistive enclosure.

(b) The means of fire detection, suppression and alarming are provided and accessible.

(13) Remarks—The room contains cable in conduit only.

9A.4.1.5.8 DG Control Panel C Room (Rm No. 536)

(1) Fire Area—F4302

(2) Equipment: See Table 9A.6-2

Safety-Related	Provides Core Cooling
Yes, D3	Yes, D3

(3) Radioactive Material Present—None.

(4) Qualifications of Fire Barriers—The exterior wall and walls common to corridor C (Rm 530), the D/G Fan and HVAC room (Rm 533), the D/G Exhaust Duct C (Rm 534), and the clean area access A/C (Rm 517) are of 3 h fire-resistive concrete construction. A 3 h fire-resistive door provides access and egress from the clean area access. A fire rated wall and door separates room No. 536 from the D/G fan and HVAC Room (Rm 533). A section of the

ceiling common to fire area F4300 above and the entire floor below are of 3 h fire-resistive concrete construction. The remainder of the ceiling is internal to fire area F4302 and is not fire rated.

(5) Combustibles Present—No significant quantities of exposed combustibles. 727 MJ/m^2 NCLL (727 MJ/m^2 maximum average) applies.

(6) Detection Provided—Class A supervised POC detection system and alarm pull stations at 6.3-D.2 and 6.3-C.2.

(7) Suppression Available:

Type	Location/Actuation
Standpipe and hose reel	6.3-D.2 6.3-C.2/Manual
ABC hand extinguishers	6.3-D.2 6.3-C.2/Manual

(8) Fire Protection Design Criteria Employed:

(a) The non-safety-related function is located in a separate fire resistive enclosure.

(b) Fire detection and suppression capability is provided and accessible.

(c) Fire stops are provided for cable tray and piping penetrations through rated fire barriers.

(9) Consequences of Fire—The postulated fire assumes loss of function of the room and, consequently, temporary loss of access to the C diesel generator HVAC room. Continuous access to the diesel generator HVAC room is not required. Functional backup is provided by diesel generators A and B.

Smoke from a fire will be removed by the EHVAC(C) system operating in its smoke removal mode.

(10) Consequences of Fire Suppression—Suppression extinguishes the fire. Refer to Section 3.4, “Water Level (Flood) Design”, for the drain system.

(11) Design Criteria Used for Protection Against Inadvertent Operation, Careless Operation or Rupture of the Suppression System:

(a) Refer to Section 3.4, “Water Level (Flood) Design”, for the drain system.

(b) ANSI B31.1 standpipe (rupture unlikely)

(12) Fire Containment or Inhibiting Methods Employed:

(a) The functions are located in a separate fire-resistive enclosure.

(b) The means of fire detection, suppression and alarming are provided and accessible.

(13) Remarks—None

9A.4.1.5.9 D/G Fan and HVAC Room (Rm No. 533)

(1) Fire Area—F4300

(2) Equipment: See Table 9A.6-2

Safety-Related	Provides Core Cooling
Yes, D3	Yes, D3

(3) Radioactive Material Present—None.

(4) Qualifications of Fire Barriers—The walls common to corridor C (Rm 530), the D/G Exhaust Duct C room (Rm 534), the D/G Control Panel C room (Rm 536), and the exterior wall are of 3 h fire-resistive concrete construction. Access and egress is provided by a fire rated door connection room 533 to room 536. The portion of the ceiling common to fire areas F4302 (Rm 633) and F6301 (Rm 630) are of 3 h fire-resistive concrete construction. The remaining portion of the ceiling and the entire floor are not fire rated because they are internal to fire area F4300.

(5) Combustibles Present:

Fire Loading	Total Heat of Combustion (MJ)
Cable Tray	727 MJ/m^2 NCLL (727 MJ/m^2 maximum average) applies.
Fuel Oil	Could be variable due to possible fuel oil leaks in lines passing through this room.

(6) Detection Provided–Class A supervised POC in the room and manual alarm pull station at Col. 6.3-C.2 and 6.3-D.2.

(7) Suppression Available:

Type	Location/Actuation
Standpipe and hose reel	Col. 6.3-C.2 6.3-D.2/Manual
ABC hand extinguishers	6.4-C.2 6.4-D.8/Manual

(8) Fire Protection Design Criteria Employed:

(a) The function is located in a fire area which is separate from the fire areas containing equipment providing alternate means of performing the safety or shutdown function.

(b) Fire detection and suppression capability is provided and accessible.

(c) Fire stops are provided for cable tray and piping penetrations through rated fire barriers.

(9) Consequences of Fire—The postulated fire assumes the loss of the function. The provisions for core cooling systems backup are defined in Subsection 9A.2.5.

Smoke from a fire will be removed by the EHVAC(C) system operating in its smoke removal mode. The emergency supply fan (C) will also remove smoke from the room if the diesel is running or if initiated manually.

(10) Consequences of Fire Suppression—Suppression extinguishes the fire. Refer to Section 3.4, “Water Level (Flood) Design”, for the drain system.

(11) Design Criteria Used for Protection Against Inadvertent Operation, Careless Operation or Rupture of the Suppression System:

(a) Location of the manual hose suppression system external to the room

(b) Provision of raised supports for the equipment

(c) Refer to Section 3.4, “Water Level (Flood) Design”, for the drain system.

(d) ANSI B31.1 standpipe (rupture unlikely)

(12) Fire Containment or Inhibiting Methods Employed:

(a) The functions are located in a separate fire-resistive enclosure.

(b) The means of fire detection, suppression and alarming are provided and accessible.

(13) Remarks—Due to the large ventilation openings in the floor, this room must be considered as an extension of the diesel generator room below.

9A.4.1.5.10 Exhaust Duct C Room (Rm No. 534)

(1) Fire Area—F4300

(2) Equipment: See Table 9A.6-2

Safety-Related	Provides Core Cooling
Yes, D3	Yes, D3

(3) Radioactive Material Present—None.

(4) Qualifications of Fire Barriers—The room has a large ventilation opening to the outside and is not fire rated. A concrete fire rated wall separates this room from the D/G C fan and HVAC room (Rm 533). The second exterior wall and the D/G Control Panel C room (Rm 536) are of 3 h fire-resistive concrete construction. The floor and the ceiling are not fire rated as they are internal to fire area F4300.

(5) Combustibles Present:

Fire Loading	Total Heat of Combustion (MJ)
None	727 MJ/m^2 NCLL (727 MJ/m^2 maximum average) applies.

(6) Detection Provided—manual alarm pull station at Col. 6.3-D.2 and 6.3-C.2.

(7) Suppression Available:

Type	Location/Actuation
Standpipe and hose reel	6.3-D.2, 6.3-C.2/Manual
ABC hand extinguishers	6.4-D.2, 6.4-C.2/Manual

(8) Fire Protection Design Criteria Employed:

(a) The function is located in a fire area which is separate from the fire areas containing equipment providing alternate means of performing the safety or shutdown function.

(b) Fire detection and suppression capability is provided and accessible.

(9) Consequences of Fire—The provisions for core cooling systems backup are defined in Subsection 9A.2.5.

The emergency supply fan (C) will remove smoke from the room if the diesel is running or if initiated manually.

(10) Consequences of Fire Suppression—Suppression extinguishes the fire. Refer to Section 3.4, "Water Level (Flood) Design", for the drain system.

(11) Design Criteria Used for Protection Against Inadvertent Operation, Careless Operation or Rupture of the Suppression System:

(a) Location of the manual hose suppression system external to the room

(b) Provision of raised supports for the equipment

(c) Refer to Section 3.4, "Water Level (Flood) Design", for the drain system.

(d) ANSI B31.1 standpipe (rupture unlikely)

(12) Fire Containment or Inhibiting Methods Employed:

(a) The functions are located in a separate fire-resistive enclosure.

(b) The means of fire detection, suppression and alarming are provided and accessible.

(13) Remarks—None

9A.4.1.5.11 Not Used

9A.4.1.5.12 Corridor B (Rm No. 520)

(1) Fire Area—F4201

(2) Equipment: See Table 9A.6-2

Safety-Related	Provides Core Cooling
Yes, D2	Yes, D2

(3) Radioactive Material Present—None that can be released as a result of fire.

(4) Qualifications of Fire Barriers—The wall common with the diesel generator fan and HVAC room (Rm 522), the exterior wall, the spent fuel storage pool wall, the elevator (Rm 194), the stairwell (Rm 193), the D/G control room (Rm 524), the clean access area B room (Rm 527) and the division 2 electrical penetration room (Rm 528) wall serve as fire barriers and are of 3 h fire-resistive concrete construction. Sections of the floor and ceiling that are common to fire areas F4230, F4320 and F1200 below and F6200 above are of 3 h fire-resistive concrete construction. The remainder of the walls, floor and ceiling are of concrete construction, but are non-fire rated. The building cross-corridor has a 3 h fire-resistive door where room 520 meets with room 530.

(5) Combustibles Present:

Fire Loading	Total Heat of Combustion (MJ)
Cable Tray	727 MJ/m^2 NCLL (727 MJ/m^2 maximum average) applies.

(6) Detection Provided—Class A supervised POC in the room and manual alarm pull station at Col. 2.1-F.0.

(7) Suppression Available:

Type	Location/Actuation
Standpipe and hose reel	Col. 2.1-F.1/Manual
ABC hand extinguishers	Col. 2.1-F.1 & 1.8-B.1/Manual

(8) Fire Protection Design Criteria Employed:

(a) The function is located in a separate fire resistive enclosure.

(b) Fire detection and suppression capability is provided and accessible.

(c) Fire stops are provided for cable tray and piping penetrations through rated fire barriers.

(9) Consequences of Fire—The postulated fire assumes the loss of the function. The provisions for core cooling systems backup are defined in Subsection 9A.2.5.

Smoke from a fire will be removed by the normal HVAC System operating in its smoke removal mode.

(10) Consequences of Fire Suppression—Suppression extinguishes the fire. Refer to Section 3.4, "Water Level (Flood) Design", for the drain system.

(11) Design Criteria Used for Protection Against Inadvertent Operation, Careless Operation or Rupture of the Suppression System:

(a) Location of the manual suppression system in the corridor, external to the rooms containing main safety-related equipment

(b) Provision of raised supports for the equipment

(c) Refer to Section 3.4, "Water Level (Flood) Design", for the drain system.

(d) ANSI B31.1 standpipe (rupture unlikely)

(12) Fire Containment or Inhibiting Methods Employed:

(a) The functions are located in a separate fire-resistive enclosure.

(b) The means of fire detection, suppression and alarming are provided and accessible.

(13) Remarks—None

9A.4.1.5.13 U/D Personnel Hatch (Rm No. 521)

(1) Fire Area—F4201

(2) Equipment: See Table 9A.6-2

Safety-Related	Provides Core Cooling
No	No

(3) Radioactive Material Present—None that can be released as a result of fire.

(4) Qualifications of Fire Barriers—The walls, ceiling and the floors are concrete and are not rated as they are internal to fire area F4201. The containment serves as one wall of the room. Access to the room is provided from Corridor B (Rm No. 520).

(5) Combustibles Present:

Fire Loading	Total Heat of Combustion (MJ)
None	727 MJ/m^2 NCLL (727 MJ/m2 maximum average) applies.

(6) Detection Provided—Class A supervised POC in the room and manual alarm pull station at Col. 2.1-F.1.

(7) Suppression Available:

Type	Location/Actuation
Standpipe and hose reel	Col. 2.1-F.1/Manual
ABC hand extinguishers	Col. 2.1-F.1 & 1.8-B.2/Manual

(8) Fire Protection Design Criteria Employed:

(a) The function is located in a separate fire resistive enclosure.

(b) Fire detection and suppression capability is provided and accessible.

(c) Fire stops are provided for cable tray and piping penetrations through rated fire barriers.

(9) Consequences of Fire—The postulated fire assumes the loss of the function. The function is not safety-related.

Smoke from a fire will be removed by the normal HVAC System operating in its smoke removal mode.

(10) Consequences of Fire Suppression—Suppression extinguishes the fire. Refer to Section 3.4, “Water Level (Flood) Design”, for the drain system.

(11) Design Criteria Used for Protection Against Inadvertent Operation, Careless Operation or Rupture of the Suppression System:

(a) Location of the manual suppression system external to the room

(b) Provision of raised supports for the equipment

(c) Refer to Section 3.4, “Water Level (Flood) Design”, for the drain system.

(d) ANSI B31.1 standpipe (rupture unlikely)

(12) Fire Containment or Inhibiting Methods Employed:

(a) The functions are located in a separate fire-resistive enclosure.

(b) The means of fire detection, suppression and alarming are provided and accessible.

(13) Remarks—The room contains cable in conduit only.

9A.4.1.5.14 D/G Fan and HVAC Room B (Rm No. 522)

(1) Fire Area—F4200

(2) Equipment: See Table 9A.6-2

Safety-Related	Provides Core Cooling
Yes, D2	Yes, D2

(3) Radioactive Material Present—None.

(4) Qualifications of Fire Barriers—The exterior wall and the wall common with corridor B (Rm 520), the D/G Control Panel B (Rm 524), the D/G Exhaust Duct B (Rm 523), and the stairwell (Rm 293) are of 3 h fire-resistive concrete construction. The portion of the ceiling common to fire areas F4202 (Rm 525) and F6201 (Rm 620) are of 3 h fire-resistive concrete construction. The remaining portion of the ceiling and the entire floor are not fire rated as they are internal to fire area F4200.

(5) Combustibles Present:

Fire Loading	Total Heat of Combustion (MJ)
Cable Tray	727 MJ/m^2 NCLL (727 MJ/m^2 maximum average) applies.
Fuel Oil	Could be variable due to possible fuel oil leaks in lines passing through this room.

(6) Detection Provided—Class A supervised POC in the room and manual alarm pull station at Col. 1.6-D.5.

(7) Suppression Available:

Type	Location/Actuation
Standpipe and hose reel	Col. 1.6-D.5/Manual
ABC hand extinguishers	Col. 1.6-D.5/ Manual

(8) Fire Protection Design Criteria Employed:

(a) The function is located in a fire area which is separate from the fire areas containing equipment providing alternate means of performing the safety or shutdown function.

(b) Fire detection and suppression capability is provided and accessible.

(c) Fire stops are provided for cable tray and piping penetrations through rated fire barriers.

(9) Consequences of Fire—The postulated fire assumes the loss of the function. The provisions for core cooling systems backup are defined in Subsection 9A.2.5.

Smoke from a fire will be removed by the EHVAC(B) system operating in its smoke removal mode. The emergency supply fan (B) will also remove smoke from the room if the diesel is running or if initiated manually.

(10) Consequences of Fire Suppression—Suppression extinguishes the fire. Refer to Section 3.4, "Water Level (Flood) Design", for the drain system.

(11) Design Criteria Used for Protection Against Inadvertent Operation, Careless Operation or Rupture of the Suppression System:

(a) Location of the manual hose suppression system external to the room

(b) Provision of raised supports for the equipment

(c) Refer to Section 3.4, "Water Level (Flood) Design", for the drain system.

(d) ANSI B31.1 standpipe (rupture unlikely)

(12) Fire Containment or Inhibiting Methods Employed:

(a) The functions are located in a separate fire-resistive enclosure.

(b) The means of fire detection, suppression and alarming are provided and accessible.

(13) Remarks—Due to the large ventilation openings in the floor, this room must be considered as an extension of the diesel generator room below.

9A.4.1.5.15 Exhaust Duct B Room (Rm No. 523)

(1) Fire Area—F4200

(2) Equipment: See Table 9A.6-2

Safety-Related	Provides Core Cooling
Yes, D2	Yes, D2

(3) Radioactive Material Present—None.

(4) Qualifications of Fire Barriers—The room has a large ventilation opening to the outside and is not fire rated. A 3 h fire rated wall separates this room from the DG Control Panel B Room (Rm 524), and the D/G Fan and HVAC room B (Rm 522), and the fourth wall (exterior). The floor and the ceiling are not fire rated as they are internal to fire area F4200.

(5) Combustibles Present:

Fire Loading	Total Heat of Combustion (MJ)
None	727 MJ/m^2 NCLL (727 MJ/m^2 maximum average) applies.

(6) Detection Provided—manual alarm pull station at Col. 1.6-D.5.

(7) Suppression Available:

Type	Location/Actuation
Standpipe and hose reel	Col. 1.6-D.5/Manual
ABC hand extinguishers	Col. 1.6-D.5/ Manual

(8) Fire Protection Design Criteria Employed:

(a) The function is located in a fire area which is separate from the fire areas containing equipment providing alternate means of performing the safety or shutdown function.

(b) Fire detection and suppression capability is provided and accessible.

(9) Consequences of Fire—The provisions for core cooling systems backup are defined in Subsection 9A.2.5.

The emergency supply fan (B) will also remove smoke from the room if the diesel is running or if initiated manually.

(10) Consequences of Fire Suppression—Suppression extinguishes the fire. Refer to Section 3.4, “Water Level (Flood) Design”, for the drain system.

(11) Design Criteria Used for Protection Against Inadvertent Operation, Careless Operation or Rupture of the Suppression System:

(a) Location of the manual hose suppression system external to the room

(b) Provision of raised supports for the equipment

(c) Refer to Section 3.4, “Water Level (Flood) Design”, for the drain system.

(d) ANSI B31.1 standpipe (rupture unlikely)

(12) Fire Containment or Inhibiting Methods Employed:

(a) The functions are located in a separate fire-resistive enclosure.

(b) The means of fire detection, suppression and alarming are provided and accessible.

(13) Remarks—Due to the large ventilation openings in the floor, this room must be considered as an extension of the diesel generator room below.

9A.4.1.5.16 DG Control Panel B (Rm No. 524)

(1) Fire Area—F4202

(2) Equipment: See Table 9A.6-2

Safety-Related	Provides Core Cooling
Yes, D2	Yes, D2

(3) Radioactive Material Present—None.

(4) Qualifications of Fire Barriers—All walls are of 3 h fire-resistive concrete construction. A portion of the ceiling serves as a fire barrier between fire areas F4200 and F4202. The remainder of the ceiling and the entire floor do not serve as fire barriers and are not fire rated. A 3 h fire rated door provides access from clean area access room 527. There are two, 3 h fire rated doors, one for access to diesel generator fan room B (Rm 522) and the other to the duct room (Rm 523). There is a floor hatch for removal of equipment from the floor below.

(5) Combustibles Present—No significant quantities of exposed combustibles. 727 MJ/m^2 NCLL (727 MJ/m^2 maximum average) applies.

(6) Detection Provided—Class A supervised POC detection system and alarm pull station in the room.

(7) Suppression Available:

Type	Location/Actuation
Standpipe and hose reel	1.6-D.5/Manual
ABC hand extinguishers	1.6-D.5/Manual

(8) Fire Protection Design Criteria Employed:

(a) The non-safety-related function is located in a separate fire-resistive enclosure.

(b) Fire detection and suppression capability is provided and accessible.

(c) Fire stops are provided for cable tray and piping penetrations through rated fire barriers.

(9) Consequences of Fire—The postulated fire assumes loss of function of the room and, consequently, temporary loss of access to the B diesel generator HVAC room. Continuous access to the diesel generator HVAC room is not required. Functional backup is provided by diesel generators A and C.

Smoke from a fire will be removed by the EHVAC(B) system operating in its smoke removal mode.

(10) Consequences of Fire Suppression—Suppression extinguishes the fire. Refer to Section 3.4 "Water Level (Flood) Design", for the drain system.

(11) Design Criteria Used for Protection Against Inadvertent Operation, Careless Operation or Rupture of the Suppression System:

(a) Location of the manual suppression system internal to this non-safety-related room

(b) Refer to Section 3.4 "Water Level (Flood) Design", for the drain system.

(c) ANSI B31.1 standpipe (rupture unlikely)

(d) Alternate access routes to other areas of the reactor building are provided

(12) Fire Containment or Inhibiting Methods Employed:

(a) The functions are located in a separate fire-resistive enclosure.

(b) The means of fire detection, suppression and alarming are provided and accessible.

(13) Remarks—None

9A.4.1.5.17 Not Used

9A.4.1.5.18 Not Used

9A.4.1.5.19 Electrical Penetration Room (Rm 543)

(1) Fire Area—F3400

(2) Equipment: See Table 9A.6-2

Safety-Related	Provides Core Cooling
Yes, D	Yes, D

(3) Radioactive Material Present—None that can be released as a result of fire.

(4) Qualifications of Fire Barriers—The containment serves as one wall of the room. The remaining walls serve as fire barriers and are of 3 h fire-resistive concrete construction. The floor is internal to fire area F3400 and is not fire rated. The ceiling is common to fire areas F4201 and F6400 above and is of 3 h fire-resistive concrete construction. Access to the room is provided from corridor D (Rm 547) through a 3 h fire-resistant door.

(5) Combustibles Present:

Fire Loading	Total Heat of Combustion (MJ)
Cable Tray	1454 MJ/m^2 ECLL (1454 MJ/m^2 maximum average) applies.

(6) Detection Provided—Class A supervised POC in the room and manual alarm pull station at Col. 1.8-B.1 and 2.1-F.1.

(7) Suppression Available:

Type	Location/Actuation
Standpipe and hose reel	Col. 1.8-B.1 & 2.1-F.1/Manual
ABC hand extinguishers	Col. 1.8-B.1 & 2.1-F.1/ Manual

(8) Fire Protection Design Criteria Employed:

(a) The function is located in a separate fire-resistive enclosure.

(b) Fire detection and suppression capability is provided and accessible.

(c) Fire stops are provided for piping penetrations through rated fire barriers.

(9) Consequences of Fire—The postulated fire assumes the loss of the function. The provisions for core cooling systems backup are defined in Subsection 9A.2.5.

Smoke from a fire will be removed by the normal HVAC System operating in its smoke removal.

(10) Consequences of Fire Suppression—Suppression extinguishes the fire. Refer to Section 3.4 “Water Level (Flood) Design”, for the drain system.

(11) Design Criteria Used for Protection Against Inadvertent Operation, Careless Operation or Rupture of the Suppression System:

(a) Location of the manual suppression system external to the room

(b) Provision of raised supports for the equipment

(c) Refer to Section 3.4 “Water Level (Flood) Design”, for the drain system.

(d) ANSI B31.1 standpipe (rupture unlikely)

(12) Fire Containment or Inhibiting Methods Employed:

(a) The functions are located in a separate fire-resistive enclosure.

(b) The means of fire detection, suppression and alarming are provided and accessible.

(13) Remarks—Cabling to the room is routed in embedded conduit to give an equivalent of a 3 h fire-rating for the separation between the Division 4 cables and other plant cabling.

9A.4.1.5.20 FPC Valve Room (Rm No. 542)

(1) Fire Area—F4201

(2) Equipment: See Table 9A.6-2

Safety-Related	Provides Core Cooling
No	No

(3) Radioactive Material Present—None that can be released as a result of fire.

(4) Qualifications of Fire Barriers—The wall common to the steam tunnel (Rm.440) and the wall common to the Division 4 electrical penetration room (Rm 543) are of 3 h fire-resistive concrete construction. The containment also serves as one wall of the room. The remaining walls and floor are internal to fire area F4201 and are not fire rated. A section of the ceiling is common to fire area F6201 above and is of 3 h fire-resistive concrete construction. The remainder of the ceiling is not fire rated. Access to the room is provided from the FPC HVH pump area (Rm 547) through an open interconnecting vestibule.

(5) Combustibles Present:

Fire Loading	Total Heat of Combustion (MJ)
Cable Tray	727 MJ/m^2 NCLL (727 MJ/m^2 maximum average) applies.

(6) Detection Provided—Class A supervised POC in the room and manual alarm pull station at Col. 1.8-B.1.

(7) Suppression Available:

Type	Location/Actuation
Standpipe and hose reel	Col. 2.1-F.1 & 1.8-B.1/Manual
ABC hand extinguishers	Col. 2.1-F.1 & 1.8-B.1/Manual

(8) Fire Protection Design Criteria Employed:

(a) The function is located in a separate fire-resistive enclosure.

(b) Fire detection and suppression capability is provided and accessible.

(9) Consequences of Fire—The postulated fire assumes the loss of the function. Inboard isolation valves provide alternate means of isolation.

Smoke from a fire will be removed by the normal HVAC System operating in its smoke removal mode.

(10) Consequences of Fire Suppression—Suppression extinguishes the fire. Refer to Section 3.4 “Water Level (Flood) Design”, for the drain system.

(11) Design Criteria Used for Protection Against Inadvertent Operation, Careless Operation or Rupture of the Suppression System:

(a) Location of the manual suppression system external to the room

(b) Provision of raised supports for the equipment

(c) Refer to Section 3.4 “Water Level (Flood) Design”, for the drain system.

(d) ANSI B31.1 standpipe (rupture unlikely)

(12) Fire Containment or Inhibiting Methods Employed:

(a) The functions are located in a separate fire-resistive enclosure.

(b) The means of fire detection, suppression and alarming are provided and accessible.

(13) Remarks—None.

9A.4.1.5.21 FPC Pump Room (Rm No. 546)

(1) Fire Area F4201

(2) Equipment: See Table 9A.6-2

Safety-Related	Provides Core Cooling
Yes, D1, and 2	No

(3) Radioactive Material Present—None that can be released as a result of fire.

(4) Qualifications of Fire Barriers—Two walls are formed by exterior walls of the building. The remaining walls, and the floor and ceiling, are internal to fire area F4201 and are not fire rated. Access to the room is provided from the FPC HVH area (Rm 547) via a non fire rated door.

(5) Combustibles Present:

Fire Loading	Total Heat of Combustion (MJ)
Cable Tray	727 MJ/m^2 NCLL (727 MJ/m^2 maximum average) applies.

(6) Detection Provided—Class A supervised POC in the room and manual alarm pull station at Col. 1.8-B.1.

(7) Suppression Available:

Type	Location/Actuation
Standpipe and hose reel	Col. 2.1-F.1& 1.8-B.1/Manual
ABC hand extinguishers	Col. 2.1-F.1 & 1.8-B.1/ Manual

(8) Fire Protection Design Criteria Employed:

(a) The function is located in a separate fire-resistive enclosure.

(b) Fire detection and suppression capability is provided and accessible.

(9) Consequences of Fire—The postulated fire assumes the loss of the function. A redundant means of providing cooling to the spent fuel pool is through the RHR system.

Smoke from a fire will be removed by the normal HVAC System operating in its smoke removal mode.

(10) Consequences of Fire Suppression—Suppression extinguishes the fire. Refer to Section 3.4 "Water Level (Flood) Design", for the drain system.

(11) Design Criteria Used for Protection Against Inadvertent Operation, Careless Operation or Rupture of the Suppression System:

(a) Location of the manual suppression system external to the room

(b) Provision of raised supports for the equipment

(c) Refer to Section 3.4 "Water Level (Flood) Design", for the drain system.

(d) ANSI B31.1 standpipe (rupture unlikely)

(12) Fire Containment or Inhibiting Methods Employed:

(a) The functions are located in a separate fire-resistive enclosure.

(b) The means of fire detection, suppression and alarming are provided and accessible.

(13) Remarks—None.

9A.4.1.5.22 Not Used

9A.4.1.5.23 Not Used

9A.4.1.5.24 Not Used

9A.4.1.5.25 Not Used

9A.4.1.5.26 FPC Heat Exchanger Room (Rm No. 544)

(1) Fire Area—F4201

(2) Equipment: See Table 9A.6-2

Safety-Related	Provides Core Cooling
Yes, D1 & D2	No

(3) Radioactive Material Present—None that can be released as a result of fire.

(4) Qualifications of Fire Barriers—The exterior wall of the room and the wall common with the steam tunnel (Rm 440) are of 3 h fire-resistive concrete construction. The remainder of the walls, the ceiling and the floor are concrete and are not rated as they are internal to fire area F4201. Access is provided by removing removable shield blocks which separate the two FPC heat exchanger rooms (Rms 544 and 545).

(5) Combustibles Present:

Fire Loading	Total Heat of Combustion (MJ)
Cable Tray	727 MJ/m^2 NCLL (727 MJ/m^2 maximum average) applies.

(6) Detection Provided—Class A supervised POC in the room and manual alarm pull station at Col. 1.8-B.1.

(7) Suppression Available:

Type	Location/Actuation
Standpipe and hose reel	Col. 1.8-B.1/Manual
ABC hand extinguishers	Col. 1.8-B.1/ Manual

(8) Fire Protection Design Criteria Employed:

(a) The function is located in a separate fire-resistive enclosure.

(b) Fire detection and suppression capability is provided and accessible.

(c) Fire stops are provided for cable tray and piping penetrations through rated fire barriers.

(9) Consequences of Fire—The postulated fire assumes loss of the function, which is not safety-related.

Smoke from a fire will be removed by the normal HVAC System operating in its smoke removal mode.

(10) Consequences of Fire Suppression—Suppression extinguishes the fire. Refer to Section 3.4 “Water Level (Flood) Design”, for the drain system.

(11) Design Criteria Used for Protection Against Inadvertent Operation, Careless Operation or Rupture of the Suppression System:

(a) Location of the manual suppression system in the corridor, external to the rooms containing safety-related equipment

(b) Provision of raised supports for the equipment

(c) Refer to Section 3.4 “Water Level (Flood) Design”, for the drain system.

(d) ANSI B31.1 standpipe (rupture unlikely)

(12) Fire Containment or Inhibiting Methods Employed:

(a) The functions are located in a separate fire-resistive enclosure.

(b) The means of fire detection, suppression and alarming are provided and accessible.

(13) Remarks—None.

9A.4.1.5.27 Instrument Piping Penetration Room (Rm No. 511)

(1) Fire Area—F4101

(2) Equipment: See Table 9A.6-2

Safety-Related	Provides Core Cooling
Yes, D1	Yes, D1

(3) Radioactive Material Present—None that can be released as a result of fire.

(4) Qualifications of Fire Barriers—The ceiling and wall common to steam tunnel room (Rm No.517) are fire barriers and are of 3 h fire-resistive concrete construction. The containment serves as one wall of the room. The floor and remaining walls are internal to fire area F4101 and are not fire rated. Access is from the steam tunnel access room (Rm 511) through a non-fire rated door.

(5) Combustibles Present:

Fire Loading Total	Total Heat of Combustion (MJ)
Cable Tray	727 MJ/m^2 NCLL (727 MJ/m^2 maximum average) applies.

(6) Detection Provided—Class A supervised POC in the room and manual alarm pull stations at Col. 5.5-A.9.

(7) Suppression Available:

Type	Location/Actuation
Standpipe and hose reel	Col. 5.5-A.9/Manual
ABC hand extinguishers	Col. 5.5-A.9/ Manual

(8) Fire Protection Design Criteria Employed:

(a) The function is located in a separate fire-resistive enclosure.

(b) Fire detection and suppression capability is provided and accessible.

(c) Fire stops are provided for cable tray and piping penetrations through rated fire barriers.

(d) All penetrations are within a single fire area.

(9) Consequences of Fire—The postulated fire assumes loss of the function. Three divisions of redundant penetrations are provided in other fire areas.

Smoke from a fire will be removed by the normal HVAC System operating in its smoke removal mode.

(10) Consequences of Fire Suppression—Suppression extinguishes the fire. Refer to Section 3.4 “Water Level (Flood) Design”, for the drain system.

(11) Design Criteria Used for Protection Against Inadvertent Operation, Careless Operation or Rupture of the Suppression System:

(a) Location of the manual suppression system in the corridor, external to the rooms containing the main safety-related equipment

(b) Provision of raised supports for the equipment

(c) Refer to Section 3.4 “Water Level (Flood) Design”, for the drain system.

(d) ANSI B31.1 standpipe (rupture unlikely)

(12) Fire Containment or Inhibiting Methods Employed:

(a) The functions are located in a separate fire-resistive enclosure.

(b) The means of fire detection, suppression and alarming are provided and accessible.

(13) Remarks—None.

9A.4.1.5.28 Clean Area Access Room (Rm No. 517)

(1) Fire Area—F3300

(2) Equipment: See Table 9A.6-2

Safety-Related	Provides Core Cooling
No	No

(3) Radioactive Material Present—None that can be released as a result of fire.

(4) Qualifications of Fire Barriers—All walls and a section of the floor, common to fire areas F4101 and F4301 below, are of 3 h fire-resistive concrete construction. The ceiling is internal to fire area F3300 above and is not fire rated. Three h fire-resistive doors provide access and egress from the D/G A control room (Rm (516), the D/G C control room (Rm 536), the elevator (Rm 317) and the stairwell (Rm 316).

(5) Combustibles Present:

Fire Loading	Total Heat of Combustion (MJ)
Cable Tray	727 MJ/m^2 NCLL (727 MJ/m^2 maximum average) applies.

(6) Detection Provided—Class A supervised POC in the room and manual alarm pull station at Col. 6.3-C.2 and 6.3-D.2.

(7) Suppression Available:

Type	Location/Actuation
Standpipe and hose reel	Col. 6.3-C.2 & 6.3-D.2/Manual
ABC hand extinguishers	Col. 6.3-C.2 & 6.3-D.2/Manual

(8) Fire Protection Design Criteria Employed:

(a) The function is located in a separate fire-resistive enclosure.

(b) Fire detection and suppression capability is provided and accessible.

(c) Fire stops are provided for cable tray and piping penetrations through rated fire barriers.

(9) Consequences of Fire—The postulated fire assumes loss of the function.

Smoke from a fire will be removed by the EHVAC(C) system operating in its smoke removal mode.

(10) Consequences of Fire Suppression—Suppression extinguishes the fire. Refer to Section 3.4 “Water Level (Flood) Design”, for the drain system.

(11) Design Criteria Used for Protection Against Inadvertent Operation, Careless Operation or Rupture of the Suppression System:

(a) Provision of raised supports for the equipment

(b) Refer to Section 3.4 “Water Level (Flood) Design”, for the drain system.

(c) ANSI B31.1 standpipe (rupture unlikely)

(12) Fire Containment or Inhibiting Methods Employed:

(a) The functions are located in a separate fire-resistive enclosure.

(b) The means of fire detection, suppression and alarming are provided and accessible.

(13) Remarks—None.

9A.4.1.5.29 Division 1 Electrical Penetration Room (Rm No. 518)

(1) Fire Area—F1100

(2) Equipment: See Table 9A.6-2

Safety-Related	Provides Core Cooling
Yes, D1	Yes, D1

(3) Radioactive Material Present—None that can be released as a result of fire.

(4) Qualifications of Fire Barriers—The floor is not rated as it is internal to fire area F1100. The containment forms one wall and the remaining walls are of 3 h fire-resistive concrete construction. The ceiling is common to fire area F4301 above and is of 3 h fire-resistive concrete construction. Access to the room is provided from the corridor A (Rm 510) through a 3 h fire rated door.

(5) Combustibles Present:

Fire Loading	Total Heat of Combustion (MJ)
Cable Tray	1454 MJ/m^2 ECLL (1454 MJ/m^2 maximum average) applies.

(6) Detection Provided—Class A supervised POC in the room and manual alarm pull station at Col. 5.5-A.9 and 5.9-F.2.

(7) Suppression Available:

Type	Location/Actuation
Standpipe and hose reel	Col. 5.5-A.9 & 5.9-F.2/Manual
ABC hand extinguishers	Col. 5.5-A.9 & 5.9-F.2/Manual

(8) Fire Protection Design Criteria Employed:

(a) The function is located in a separate fire-resistive enclosure.

(b) Fire detection and suppression capability is provided and accessible.

(9) Consequences of Fire—The postulated fire assumes the loss of the function. A redundant means of providing cooling to the spent fuel pool is through the RHR System.

Smoke from a fire will be removed by the normal HVAC System operating in its smoke removal mode.

(10) Consequences of Fire Suppression—Suppression extinguishes the fire. Refer to Section 3.4 “Water Level (Flood) Design”, for the drain system.

(11) Design Criteria Used for Protection Against Inadvertent Operation, Careless Operation or Rupture of the Suppression System:

(a) Location of the manual suppression system external to the room

(b) Provision of raised supports for the equipment

(c) Refer to Section 3.4 “Water Level (Flood) Design”, for the drain system.

(d) ANSI B31.1 standpipe (rupture unlikely)

(12) Fire Containment or Inhibiting Methods Employed:

(a) The functions are located in a separate fire-resistive enclosure.

(b) The means of fire detection, suppression and alarming are provided and accessible.

(13) Remarks—None.

9A.4.1.5.30 Service Corridor B (Rm No. 527)

(1) Fire Area—F3202

(2) Equipment: See Table 9A.6-2

Safety-Related	Provides Core Cooling
No	No

(3) Radioactive Material Present—None that can be released as a result of fire.

(4) Qualifications of Fire Barriers—A portion of the floor and the wall common with corridors B and D (Rms 520 and 547) are fire barriers and are of 3 h fire-resistive concrete construction. The floor and remaining walls are internal to fire area F4102 and are not fire rated. Access is from stair No.4 (Rm 327) and elevator No.4 (Rm 328) via 3 h fire rated doors. This corridor provides access to the DG control panel B room (Rm 524) and the RIP transformer room (Rm 541).

(5) Combustibles Present:

Fire Loading	Total Heat of Combustion (MJ)
Cable Tray	727 MJ/m^2 NCLL (727 MJ/m^2 maximum average) applies.

(6) Detection Provided—Class A supervised POC in the room and manual alarm pull stations at 1.6-D.5.

(7) Suppression Available:

Type	Location/Actuation
Standpipe and hose reel	Col. 1.6-D.5/Manual
ABC hand extinguishers	Col. 1.6-D.5/Manual

(8) Fire Protection Design Criteria Employed:

(a) The function is located in a separate fire-resistive enclosure.

(b) Fire detection and suppression capability is provided and accessible.

(c) Fire stops are provided for cable tray and piping penetrations through rated fire barriers.

(9) Consequences of Fire—The postulated fire assumes loss of the function. Temporary loss of access to the adjacent rooms is acceptable.

Smoke from a fire will be removed by the EHVAC(B) system operating in its smoke removal mode.

(10) Consequences of Fire Suppression—Suppression extinguishes the fire. Refer to Section 3.4 “Water Level (Flood) Design”, for the drain system.

(11) Design Criteria Used for Protection Against Inadvertent Operation, Careless Operation or Rupture of the Suppression System:

(a) Location of the manual suppression system in the corridor with a backup from the floor below

(b) Provision of raised supports for the equipment

(c) Refer to Section 3.4 “Water Level (Flood) Design”, for the drain system.

(d) ANSI B31.1 standpipe (rupture unlikely)

(12) Fire Containment or Inhibiting Methods Employed:

(a) The functions are located in a separate fire-resistive enclosure.

(b) The means of fire detection, suppression and alarming are provided and accessible.

(13) Remarks—None.

9A.4.1.5.31 Division 2 Electrical Penetration Room (Rm No. 528)

(1) Fire Area—F4201

(2) Equipment: See Table 9A.6-2

Safety-Related	Provides Core Cooling
Yes, D2	Yes, D2

(3) Radioactive Material Present—None that can be released as a result of fire.

(4) Qualifications of Fire Barriers—One wall of the room is formed by the containment. All remaining walls serve as fire barriers and are of 3 h fire-resistive concrete construction. The floor is internal to fire area F1200 and is not fire rated. The ceiling is common to fire area F4201 above and is of 3 h fire-resistive concrete construction. Access to the room is via a 3 h fire-resistive door from corridor B (Rm 520).

(5) Combustibles Present:

Fire Loading	Total Heat of Combustion (MJ)
Cable Tray	1454 MJ/m^2 ECLL (1454 MJ/m^2 maximum average) applies.

(6) Detection Provided—Class A supervised POC in the room and manual alarm pull station at Col.2.1-F.1 and 1.8-B.1.

(7) Suppression Available:

Type	Location/Actuation
Standpipe and hose reel	Col. 2.1-F.1 & 1.9-B.1/Manual
ABC hand extinguishers	Col. 2.1-G.1 & 1.8-B.1/Manual

(8) Fire Protection Design Criteria Employed:

(a) The function is located in a separate fire-resistive enclosure.

(b) Fire detection and suppression capability is provided and accessible.

(c) All penetrations are within a single fire area.

(9) Consequences of Fire—The postulated fire assumes the loss of the function. The provisions for core cooling systems backup are defined in Subsection 9A.2.5.

Smoke from a fire will be removed by the normal HVAC System operating in its smoke removal mode.

(10) Consequences of Fire Suppression—Suppression extinguishes the fire. Refer to Section 3.4 "Water Level (Flood) Design", for the drain system.

(11) Design Criteria Used for Protection Against Inadvertent Operation, Careless Operation or Rupture of the Suppression System:

(a) Location of the manual suppression system external to the room

(b) Provision of raised supports for the equipment

(c) Refer to Section 3.4 "Water Level (Flood) Design", for the drain system.

(d) ANSI B31.1 standpipe (rupture unlikely)

(12) Fire Containment or Inhibiting Methods Employed:

(a) The functions are located in a separate fire-resistive enclosure.

(b) The means of fire detection, suppression and alarming are provided and accessible.

(13) Remarks—The room contains cable in conduit only.

9A.4.1.5.32 Division 3 Electrical Penetration Room (Rm No. 532)

(1) Fire Area—F1300

(2) Equipment: See Table 9A.6-2

Safety-Related	Provides Core Cooling
Yes, D3	Yes, D3

(3) Radioactive Material Present—None that can be released as a result of fire.

(4) Qualifications of Fire Barriers—One wall of the room is formed by the containment. The remaining walls serve as fire barriers and are of 3 h fire-resistive concrete construction. The floor is common with fire area F1300

below and is not fire rated. The ceiling is common with fire area F4301 above and is of 3 h fire-resistive concrete construction. A 3 h fire-resistive curbed door provides access from Corridor C (Rm 530).

(5) Combustibles Present:

Fire Loading	Total Heat of Combustion (MJ)
Cable Tray	1454 MJ/m^2 ECLL (1454 MJ/m^2 maximum average) applies.

(6) Detection Provided—Class A supervised POC in the room and manual alarm pull station at Col. 5.9-F.2.

(7) Suppression Available:

Type	Location/Actuation
Ordinary hazard wet pipe sprinklers, having a water density of 6.1 L/min/m^2 and a coverage of 9 m^2 per head	Hatch Area/Manual
Standpipe and hose reel	Col. 5.9-F.2 & 5.5-A.9/Manual
ABC hand extinguishers	Col. 5.9-F.2 & 5.5-A.9/Manual

(8) Fire Protection Design Criteria Employed:

(a) The function is located in a separate fire-resistive enclosure.

(b) Fire detection and suppression capability is provided and accessible.

(c) Fire stops are provided for cable tray and piping penetrations through rated fire barriers.

(9) Consequences of Fire—The postulated fire assumes the loss of the function. The provisions for core cooling systems backup are defined in Subsection 9A.2.5.

Smoke from a fire will be removed by the normal HVAC System operating in its smoke removal mode.

(10) Consequences of Fire Suppression—Suppression extinguishes the fire. Refer to Section 3.4 “Water Level (Flood) Design”, for the drain system.

(11) Design Criteria Used for Protection Against Inadvertent Operation, Careless Operation or Rupture of the Suppression System:

(a) Location of the manual suppression system in the corridor, external to the rooms containing main safety-related equipment

(b) Provision of raised supports for the equipment

(c) Refer to Section 3.4 “Water Level (Flood) Design”, for the drain system.

(d) ANSI B31.1 standpipe (rupture unlikely)

(12) Fire Containment or Inhibiting Methods Employed:

(a) The functions are located in a separate fire-resistive enclosure.

(b) The means of fire detection, suppression and alarming are provided and accessible.

(13) Remarks—None.

9A.4.1.5.33 Pits and Pools (Rm No. 538, 539)

Rooms 538 and 539 are extensions of the pits and pools described for floor six. They are not open to this floor. See the floor six section on pits and pools for a discussion of these rooms.

9A.4.1.5.34 RIP Transformer Room (Rm No. 541)

(1) Fire Area—F3200

(2) Equipment: See Table 9A.6-2

Safety-Related	Provides Core Cooling
No	No

(3) Radioactive Material Present—None that can be released as a result of fire.

(4) Qualifications of Fire Barriers—The floor and the wall common with corridor D (Rm 547) are fire barriers and are of 3 h fire-resistive concrete construction. The ceiling and remaining walls are internal to fire area F4102 and are not fire rated. Access is from corridor B (Rm 527) via a nonrated door.

(5) Combustibles Present:

Fire Loading	Total Heat of Combustion (MJ)
Cable Tray	727 MJ/m^2 NCLL (727 MJ/m^2 maximum average) applies.

(6) Detection Provided—Class A supervised POC in the room and manual alarm pull stations at Col. 1.6-D.5.

(7) Suppression Available:

Type	Location/Actuation
Standpipe and hose reel	Col. 1.6-D.5/Manual
ABC hand extinguishers	Col. 1.6-D.5/Manual

(8) Fire Protection Design Criteria Employed:

(a) The function is located in a separate fire-resistive enclosure.

(b) Fire detection and suppression capability is provided and accessible.

(c) Fire stops are provided for cable tray and piping penetrations through rated fire barriers.

(9) Consequences of Fire—The postulated fire assumes loss of the function. There are 8 other RIP transformers located elsewhere.

Smoke from a fire will be removed by the EHVAC(B) system operating in its smoke removal mode.

(10) Consequences of Fire Suppression—Suppression extinguishes the fire. Refer to Section 3.4 “Water Level (Flood) Design”, for the drain system.

(11) Design Criteria Used for Protection Against Inadvertent Operation, Careless Operation or Rupture of the Suppression System:

(a) Location of the manual suppression system in the corridor with a backup from the floor below

(b) Provision of raised supports for the equipment

(c) Refer to Section 3.4 “Water Level (Flood) Design”, for the drain system.

(d) ANSI B31.1 standpipe (rupture unlikely)

(12) Fire Containment or Inhibiting Methods Employed:

(a) The functions are located in a separate fire-resistive enclosure.

(b) The means of fire detection, suppression and alarming are provided and accessible.

(13) Remarks—None.

9A.4.1.5.35 FPC Heat Exchanger Room (Rm No. 545)

(1) Fire Area—F4201

(2) Equipment: See Table 9A.6-2

Safety-Related	Provides Core Cooling
No	No

(3) Radioactive Material Present—None that can be released as a result of fire.

(4) Qualifications of Fire Barriers—One wall of the room is formed by the building exterior wall. The remaining walls and the floor are internal to fire area F4201 and are not fire rated. A section of the ceiling is common to fire area F6201 above and is of 3 h fire-resistive concrete construction.

(5) Combustibles Present:

Fire Loading	Total Heat of Combustion (MJ)
Cable Tray	727 MJ/m^2 NCLL (727 MJ/m^2 maximum average) applies.

(6) Detection Provided—Class A supervised POC in the room and manual alarm pull station at Col. 1.8-B.1 and 2.1-F.1.

(7) Suppression Available:

Type	Location/Actuation
Standpipe and hose reel	Col. 2.1-F.1 & 1.8-B.1/Manual
ABC hand extinguishers	Col. 2.1-F.1 & 1.8-B.1/ Manual

(8) Fire Protection Design Criteria Employed:

(a) The function is located in a separate fire-resistive enclosure.

(b) Fire detection and suppression capability is provided and accessible.

(c) Fire stops are provided for cable tray and piping penetrations through rated fire barriers.

(9) Consequences of Fire—The postulated fire assumes loss of the function.

Smoke from a fire will be removed by the normal HVAC System operating in its smoke removal mode.

(10) Consequences of Fire Suppression—Suppression extinguishes the fire. Refer to Section 3.4 "Water Level (Flood) Design", for the drain system.

(11) Design Criteria Used for Protection Against Inadvertent Operation, Careless Operation or Rupture of the Suppression System:

(a) Location of the manual suppression system in the corridor, external to the rooms containing safety-related equipment

(b) Provision of raised supports for the equipment

(c) Refer to Section 3.4 "Water Level (Flood) Design", for the drain system.

(d) ANSI B31.1 standpipe (rupture unlikely)

(12) Fire Containment or Inhibiting Methods Employed:

(a) The functions are located in a separate fire-resistive enclosure.

(b) The means of fire detection, suppression and alarming are provided and accessible.

(13) Remarks—None.

9A.4.1.5.36 Corridor D (Rm No. 547)

(1) Fire Area—F4201

(2) Equipment: See Table 9A.6-2

Safety-Related	Provides Core Cooling
No	No

(3) Radioactive Material Present—None that can be released as a result of fire.

(4) Qualifications of Fire Barriers—The walls common with clean access area D/B (Rm 440), transformer room (541) and the division 4 electrical penetration room (543) are of 3 h fire-resistive concrete construction. The remainder of the walls are not fire rated. A section of the floor, common to fire area F3400 below, and ceiling common to fire area F3200 above, is of 3 h fire-resistive concrete construction. The remainder of the floor and ceiling are concrete and are not fire rated as they are internal to fire area F4201. Corridor D opens directly into corridor B (Rm 520). There are nonrated doors from corridor D to the FPC heat exchanger room (Rm 545), the FPC pump room (Rm 546) and FPC valve room (Rm 542). A 3 h fire-resistive door provides access from corridor D to the division 4 electrical penetration room (Rm 543).

(5) Combustibles Present:

Fire Loading	Total Heat of Combustion (MJ)
Cable Tray	727 MJ/m^2 NCLL (727 MJ/m^2 maximum average) applies.

(6) Detection Provided—Class A supervised POC in the room and manual alarm pull station at Col. 1.8-B.1 and 2.1-F.1.

(7) Suppression Available:

Type	Location/Actuation
Standpipe and hose reel	Col. 1.8-B.1 & 2.1-F.1/Manual
ABC hand extinguishers	Col. 1.8-B.1 & 2.1-F.1/Manual

(8) Fire Protection Design Criteria Employed:

(a) The function is located in a separate fire-resistive enclosure.

(b) Fire detection and suppression capability is provided and accessible.

(c) Fire stops are provided for cable tray and piping penetrations through rated fire barriers.

(9) Consequences of Fire—The postulated fire assumes the loss of the function. Access to the corridor is from one end only. The corridor does not provide access to any area containing equipment required for save shutdown of the plant.

Smoke from a fire will be removed by the normal HVAC System operating in its smoke removal mode.

(10) Consequences of Fire Suppression—Suppression extinguishes the fire. Refer to Section 3.4 “Water Level (Flood) Design”, for the drain system.

(11) Design Criteria Used for Protection Against Inadvertent Operation, Careless Operation or Rupture of the Suppression System:

(a) Location of the manual suppression system in the corridor, external to the rooms containing safety-related equipment

(b) Provision of raised supports for the equipment

(c) Refer to Section 3.4 “Water Level (Flood) Design”, for the drain system.

(d) ANSI B31.1 standpipe (rupture unlikely)

(12) Fire Containment or Inhibiting Methods Employed:

(a) The functions are located in a separate fire-resistive enclosure.

(b) The means of fire detection, suppression and alarming are provided and accessible.

(13) Remarks—None.

9A.4.1.5.37 Upper Drywell (Rm No.591)

(1) Fire Area—F4901

(2) Equipment: See Table 9A.6-2 for this elevation. Devices within the upper drywell are also listed at floor elevation 12300 mm.

Note: Section 9A.4.1.4.1 applies for the remainder of the information for the upper drywell. See that section for additional information.

9A.4.1.6 Building—Reactor Bldg El 23500 mm and 27200 mm

9A.4.1.6.1 Cross Corridor A (Rm No. 614)

(1) Fire Area—F4100

(2) Equipment: See Table 9A.6-2

Safety-Related	Provides Core Cooling
Yes, D1	Yes, D1

(3) Radioactive Material Present—None that can be released as a result of fire.

(4) Qualifications of Fire Barriers—The exterior wall, inside wall, ceiling and floor of this corridor are of 3 h fire-resistive construction. This corridor extends across the reactor building. At the south end of the corridor, a 3 h fire-resistive door opens to the electrical equipment room (Rm 640). At the other end of the corridor, a nonrated door opens into D/G (A) exhaust fan area (Rm 613).

(5) Combustibles Present:

Fire Loading	Total Heat of Combustion (MJ)
None	727 MJ/m^2 NCLL (727 MJ/m^2 maximum average) applies.

(6) Detection Provided—Class A supervised POC in the room and manual alarm pull station at Col. 1.0-B.2 and 6.2-B.0.

(7) Suppression Available:

Type	Location/Actuation
Standpipe and hose reel	Col. 1.0-B.2 & 6.2-B.0/Manual
ABC hand extinguishers	Col. 1.0-B.2 & 6.2-B.0/Manual

(8) Fire Protection Design Criteria Employed:

(a) The function is located in a separate fire-resistive enclosure.

(b) Fire detection and suppression capability is provided and accessible.

(c) Fire stops are provided for cable tray and piping penetrations through rated fire barriers.

(9) Consequences of Fire—Alternate routes to the areas interconnected by the corridor are provided.

Smoke from a fire will be removed by the EHVAC(A) system operating in its smoke removal mode.

(10) Consequences of Fire Suppression—Suppression extinguishes the fire. Refer to Section 3.4 “Water Level (Flood) Design”, for the drain system.

(11) Design Criteria Used for Protection Against Inadvertent Operation, Careless Operation or Rupture of the Suppression System:

(a) Location of the manual suppression system in rooms adjacent to the corridor

(b) Refer to Section 3.4 "Water Level (Flood) Design", for the drain system.

(c) ANSI B31.1 standpipe (rupture unlikely)

(12) Fire Containment or Inhibiting Methods Employed:

(a) The functions are located in a separate fire-resistive enclosure.

(b) The means of fire detection, suppression and alarming are provided and accessible.

(13) Remarks—None.

9A.4.1.6.2 D/G Fuel Day Tank A Room (Rm No. 610)

(1) Fire Area—F6101

(2) Equipment: See Table 9A.6-2

Safety-Related	Provides Core Cooling
Yes, D1	Yes, D1

(3) Radioactive Material Present—None

(4) Qualifications of Fire Barriers—The walls, ceiling and floor serve as fire barriers between adjacent fire areas and are of 3 h fire-resistive concrete construction. Two 3 h fire-resistive doors provide access from D/G equipment room (A) (Rm 613). The sunken volume of the room is adequate to hold the entire contents of the day tank if an uncontrolled leak should occur.

(5) Combustibles Present:

Fire Loading	Total Heat of Combustion (MJ)
12,113 liters of Diesel fuel	5.28E+04

(6) Detection Provided—Class A supervised rate-compensated thermal detectors and infrared detectors. The detection system is a cross-zoned system requiring two detectors, one in each zone, to sense fire before initiating the deluge foam-water sprinkler system. The system alarms on any single detector sensing fire. Manual alarm pull stations are provided at Col. 6.2-B.0 and 6.6-D.0.

(7) Suppression Available:

Type	Location/Actuation
Deluge from water sprinkler system. Audible alarms are provided.	Initiated by Class A cross zone (thermal infrared) detectors/Automatic
Standpipe and hose reel	Col. 6.2-B.0 & 6.6-D.0/Manual
ABC hand extinguishers	Col. 6.2-B.0 & 6.6-D.0/Manual

(8) Fire Protection Design Criteria Employed:

(a) The function is located in a separate fire-resistive enclosure.

(b) Fire detection and suppression capability is provided and accessible.

(c) Fire stops are provided for cable tray and piping penetrations through rated fire barriers.

(9) Consequences of Fire—The postulated fire assumes the loss of the function. Diesel generators B and C would not be affected.

Smoke from a fire will be removed by the EHVAC(A) system operating in its smoke removal mode.

(10) Consequences of Fire Suppression—Suppression extinguishes the fire. Refer to Section 3.4 “Water Level (Flood) Design”, for the drain system.

(11) Design Criteria Used for Protection Against Inadvertent Operation, Careless Operation or Rupture of the Suppression System:

(a) Location of the manual suppression system in an area external to the D/G (A) fuel day tank room

(b) Provision of raised supports for the equipment

(c) Refer to Section 3.4 “Water Level (Flood) Design”, for the drain system.

(d) ANSI B31.1 standpipe (rupture unlikely)

(e) Cross-zone detectors to initiate deluge foam-water sprinkler system

(f) Provision of rate-compensated thermal detectors (less susceptible to dust and combustion products which may be in the D/G room), and infrared detectors initiating system alarm

(12) Fire Containment or Inhibiting Methods Employed:

(a) The functions are located in a separate fire-resistive enclosure.

(b) The means of fire detection, suppression and alarming are provided and accessible.

(13) Remarks—The sunken volume of the room is adequate to hold the entire contents of the day tank if an uncontrolled leak should occur.

9A.4.1.6.3 AC Filter/Fan Area (Rm No. 615)

(1) Fire Area—F4301

(2) Equipment: See Table 9A.6-2

Safety-Related	Provides Core Cooling
No	No

(3) Radioactive Material Present—None that can be released as a result of fire.

(4) Qualifications of Fire Barriers—The walls common with the dryer/separator pit, reactor well; the floor and the walls common with cross corridor A (Rm No.614), the elevator (area 192) and stairwell (area 292) are of 3 h fire-resistive concrete construction. The remainder of the walls and ceiling are not rated as they are internal to fire area F4301. A section of the floor is common to fire area F4101 below and is of 3 h fire-resistive concrete construction. The remainder of the floor is part of the containment and is of greater than 3 h fire-resistive concrete construction. The ceiling is internal to fire area F4301 and is not fire rated. Access to Rm 615 is provided by elevator (area 192), stair well Rm 292 and a corridor from room 643 via a 3 h fire-resistive door. Access to room 615 is also provided directly from room 634 which is in the same fire area. A 3 h fire-resistive damper is installed in the HVAC duct which passes through the floor next to the elevator (area 192) from fire area F4301 down to fire area F4101 on the 18100 mm elevation directly below.

(5) Combustibles Present:

Fire Loading	Total Heat of Combustion (MJ)
Cable Tray	727 MJ/m^2 NCLL (727 MJ/m^2 maximum average) applies.

(6) Detection Provided—Class A supervised POC in the room and manual alarm pull stations at Col. 5.2-B.6 and 5.2-D.8.

(7) Suppression Available:

Type	Location/Actuation
Standpipe and hose reel	Col. 5.2-B.6 & 5.2-D.8/Manual
ABC hand extinguishers	Col. 5.2-B.2 & 5.2-D.8/Manual

(8) Fire Protection Design Criteria Employed:

(a) The function is located in a room separate from the rooms which contain safety-related equipment.

(b) Fire detection and suppression capability is provided and accessible.

(c) Fire stops are provided for cable tray and piping penetrations through rated fire barriers.

(9) Consequences of Fire—The postulated fire assumes the loss of the function. There are no emergency core cooling or safe shutdown system components in the area.

Smoke from a fire will be removed by the normal HVAC System operating in its smoke removal mode.

(10) Consequences of Fire Suppression—Suppression extinguishes fire. Refer to Section 3.4 “Water Level (Flood) Design”, for the drain system.

(11) Design Criteria Used for Protection Against Inadvertent Operation, Careless Operation or Rupture of the Suppression System:

(a) Location of the manual suppression system internal to this non safety-related room

(b) Provision of raised supports for the equipment

(c) Refer to Section 3.4 “Water Level (Flood) Design”, for the drain system.

(d) ANSI B31.1 standpipe (rupture unlikely)

(12) Fire Containment or Inhibiting Methods Employed:

(a) The functions are located in a separate fire-resistive enclosure.

(b) The means of fire detection, suppression and alarming are provided and accessible.

(13) Remarks—None.

9A.4.1.6.4 D/G (A) Equipment Room (Rm No. 613)

(1) Fire Area—F4102

(2) Equipment: See Table 9A.6-2

Safety-Related	Provides Core Cooling
Yes, D1	Yes, D1

(3) Radioactive Material Present—None that can be released as a result of fire.

(4) Qualifications of Fire Barriers—The walls common with the fuel day tank area (Rm 610), the D/G (A)/Z HVAC room (Rm 612), the valve maintenance room (Rm 616), the D/G A and C access room (Rm 638) and stairwell areas (Rm 316 and Rm 195) serve as fire barriers between adjacent fire areas and are of 3 h fire-resistive concrete construction. A section of the ceiling under the FMRCD panel room (Rm 654—fire area F3300) and a section of the floor over rooms 510, 514 and 517 below (fire areas F4101 and F3300) are also of 3 h fire-resistive concrete construction. Access to the area is provided from room 638 through a 3 h fire-resistive door. Access is also provided from room 614 through a non fire rated door.

(5) Combustibles Present:

Fire Loading	Total Heat of Combustion (MJ)
Cable Tray	727 MJ/m^2 NCLL (727 MJ/m^2 maximum average) applies.

(6) Detection Provided—Class A supervised POC in the room and manual alarm pull stations at Col. 6.2-B.0 and 6.6-D.0.

(7) Suppression Available:

Type	Location/Actuation
Standpipe and hose reel	Col. 6.2-B.0 & 6.6-D.0/Manual
ABC hand extinguishers	Col. 6.2-B.0 & 6.6-D.0/Manual

(8) Fire Protection Design Criteria Employed:

(a) The function is located in a separate fire-resistive enclosure.

(b) Fire detection and suppression capability is provided and accessible.

(c) Fire stops are provided for cable tray and piping penetrations through rated fire barriers.

(9) Consequences of Fire—The postulated fire assumes the loss of the function. Diesel generators B and C would not be affected.

Smoke from a fire will be removed by the EHVAC(A) system operating in its smoke removal mode.

(10) Consequences of Fire Suppression—Suppression extinguishes the fire. Refer to Section 3.4 “Water Level (Flood) Design”, for the drain system.

(11) Design Criteria Used for Protection Against Inadvertent Operation, Careless Operation or Rupture of the Suppression System:

(a) Provision of raised supports for the equipment

(b) Refer to Section 3.4 “Water Level (Flood) Design”, for the drain system.

(c) ANSI B31.1 standpipe (rupture unlikely)

(12) Fire Containment or Inhibiting Methods Employed:

(a) The functions are located in a separate fire-resistive enclosure.

(b) The means of fire detection, suppression and alarming are provided and accessible.

(13) Remarks—None.

9A.4.1.6.5 D/G (A)/Z HVAC Room (Rm No. 612)

(1) Fire Area—F4100

(2) Equipment: See Table 9A.6-2

Safety-Related	Provides Core Cooling
Yes, D1	Yes, D1

(3) Radioactive Material Present—None.

(4) Qualifications of Fire Barriers—With the exception of the exterior wall where the ventilation opening to the outside is located, the remaining walls are all of a 3 h fire-resistive concrete construction. A portion of the floor over the D/G control Panel A area (Rm 516) and the entire ceiling are of a 3 h fire-resistive concrete construction. The remaining portion of the floor is within fire area F4100 and is not required to be a fire barrier. Access to this room is via a 3 h resistive door from the D/G (A) equipment room (Rm 613). The pipe chase for the D/G (A) exhaust stack is accessed through this room.

(5) Combustibles Present:

Fire Loading	Total Heat of Combustion (MJ)
Cable Tray	727 MJ/m^2 NCLL (727 MJ/m^2 maximum average) applies.
Bag Filters	Variable, depending on the amount of dust and debris collected.

(6) Detection Provided—Class A supervised POC in the room and manual alarm pull station at Col. 6.2-B.0 and 6.6-D.0.

(7) Suppression Available:

Type	Location/Actuation
Standpipe and hose reel	Col. 6.2-B.0 & 6.6-D.0/Manual
ABC hand extinguishers	Col. 6.2-B.0 & 6.6-D.0/Manual

(8) Fire Protection Design Criteria Employed:

(a) The function is located in a fire area which is separate from the fire areas containing equipment providing alternate means of performing the safety or shutdown function.

(b) Fire detection and suppression capability is provided and accessible.

(c) Fire stops are provided for cable tray and piping penetrations through rated fire barriers.

(9) Consequences of Fire—The postulated fire assumes the loss of the function. The provisions for core cooling systems backup are defined in Subsection 9A.2.5.

Smoke from a fire will be removed by the Emergency supply fan (A) if the diesel is running or if manually initiated.

(10) Consequences of Fire Suppression—Suppression extinguishes the fire. Refer to Section 3.4 “Water Level (Flood) Design”, for the drain system.

(11) Design Criteria Used for Protection Against Inadvertent Operation, Careless Operation or Rupture of the Suppression System:

(a) Location of the manual hose suppression system external to the room

(b) Provision of raised supports for the equipment

(c) Refer to Section 3.4 “Water Level (Flood) Design”, for the drain system.

(d) ANSI B31.1 standpipe (rupture unlikely)

(12) Fire Containment or Inhibiting Methods Employed:

(a) The functions are located in a separate fire-resistive enclosure.

(b) The means of fire detection, suppression and alarming are provided and accessible.

(13) Remarks—Due to the large ventilation openings in the floor, this room must be considered as an extension of the diesel generator room below.

9A.4.1.6.6 SRV/MSIV Maintenance Room (Rm No. 616)

(1) Fire Area—F4301

(2) Equipment: See Table 9A.6-2

Safety-Related	Provides Core Cooling
No	No

(3) Radioactive Material Present—None, normally. Low level contamination may be present during maintenance operations on safety relief valves, any radiation release is contained within containment.

(4) Qualifications of Fire Barriers—The walls common to the D/G (A) exhaust fan room (Rm 613) and access room (Rm 638) serve as fire barriers between adjacent fire areas and are of 3 h fire-resistive concrete construction. The remainder of the walls are internal to fire area F4301 and are not fire rated. A section of the floor is common to fire areas F4101, F1100 and F1300 below and is of 3 h fire-resistive concrete construction. The remainder of the floor is internal to fire area F4301 and is not fire rated. The ceiling is internal to fire area F4301 and is not fire rated. Access to the room is provided from room 615 and room 634 by non fire rated doors. There is a floor hatch at each end of the room for bringing the valves up from the floor below.

(5) Combustibles Present:

Fire Loading	Total Heat of Combustion (MJ)
None, normally small amounts of cleaning fluid during SRV maintenance periods	727 MJ/m^2 NCLL (727 MJ/m^2 maximum average) applies.

(6) Detection Provided—Class A supervised POC in the room and manual alarm pull stations at Col.5.2-B.6 and 5.2-D.8.

(7) Suppression Available:

Type	Location/Actuation
Standpipe and hose reel	Col. 5.2-B.6 & 5.2-D.8/Manual

(8) Fire Protection Design Criteria Employed:

(a) The function is located in a room separate from the rooms which contain safety-related equipment.

(b) Fire detection and suppression capability is provided and accessible.

(9) Consequences of Fire—The postulated fire assumes loss of the function. The function is not safety-related.

Smoke from a fire will be removed by the normal HVAC System operating in its smoke removal mode.

(10) Consequences of Fire Suppression—Suppression extinguishes the fire. Refer to Section 3.4 “Water Level (Flood) Design”, for the drain system.

(11) Design Criteria Used for Protection Against Inadvertent Operation, Careless Operation or Rupture of the Suppression System:

(a) Location of the manual suppression system external to the room

(b) Provision of raised supports for the equipment

(c) Refer to Section 3.4 “Water Level (Flood) Design”, for the drain system.

(d) ANSI B31.1 standpipe (rupture unlikely)

(12) Fire Containment or Inhibiting Methods Employed:

(a) The functions are located in a separate fire-resistive enclosure.

(b) The means of fire detection, suppression and alarming are provided and accessible.

(13) Remarks—None.

9A.4.1.6.7 ISI Test Room (Rm No. 617)

(1) Fire Area—F4301

(2) Equipment: See Table 9A.6-2

Safety-Related	Provides Core Cooling
No	No

(3) Radioactive Material Present—None that can be released as a result of fire.

(4) Qualifications of Fire Barriers—The walls and a section of the ceiling are not fire rated as they are internal to fire area F4301. The remainder of the ceiling is common to room 659 (fire area F6100) above and is of 3 h fire-resistive concrete construction. The floor is part of the containment and is equivalent to greater than 3 h fire-resistive concrete construction. Access to room 617 is provided from room 615 through a non fire rated door.

(5) Combustibles Present—No significant amount of exposed combustibles. 727 MJ/m^2 NCLL (727 MJ/m^2 maximum average) applies.

(6) Detection Provided—Class A supervised POC detection system in the room and alarm pull station at Col. 5.2-B.6 and 5.2-D.8.

(7) Suppression Available:

Type	Location/Actuation
Standpipe and hose reel	Col. 5.2-B.6 & 5.2-D.8/Manual
ABC hand extinguishers	Col. 5.2-B.6 & 5.2-D.8/Manual

(8) Fire Protection Design Criteria Employed:

(a) The function is located in a room separate from the rooms which contain safety-related systems.

(b) Fire detection and suppression is provided and accessible.

(c) Fire stops are provided for cable tray and piping penetrations through rated fire barriers.

(9) Consequences of Fire—The postulated fire assumes the loss of the function. There are no emergency core cooling or safe shutdown system components in the area.

Smoke from a fire will be removed by the normal HVAC System operating in its smoke removal mode.

(10) Consequences of Fire Suppression—Suppression extinguishes the fire. Refer to Section 3.4 “Water Level (Flood) Design”, for the drain system.

(11) Design Criteria Used for Protection Against Inadvertent Operation, Careless Operation or Rupture of the Suppression System:

(a) Location of the manual suppression system external to the room

(b) Provision of raised supports for the equipment

(c) Refer to Section 3.4 “Water Level (Flood) Design”, for the drain system.

(d) ANSI B31.1 standpipe rupture unlikely

(12) Fire Containment or Inhibiting Methods Employed:

(a) The functions are located in a separate fire-resistive enclosure.

(b) The means of fire detection, suppression and alarming are provided and accessible.

(13) Remarks—None.

9A.4.1.6.8 D/G (C) Equipment Room (Rm 633)

(1) Fire Area—F4302

(2) Equipment: See Table 9A.6-2

Safety-Related	Provides Core Cooling
Yes, D3	Yes, D3

(3) Radioactive Material Present—None.

(4) Qualifications of Fire Barriers—All walls are of 3 h fire-resistive concrete construction. A section of the ceiling under the FMCRD panel room (Rm 654, fire area F3300) and a section of the floor over the D/G Fan and HVAC room (Rm 533, fire area F4300) are of a 3 h fire-resistive concrete construction. All doors are 3 h fire-resistive doors. Access to the room is from the corridor (Rm 635) and clean access area A/C Room (Rm 638).

(5) Combustibles Present:

Fire Loading	Total Heat of Combustion (MJ)
Cable Tray	727 MJ/m^2 NCLL (727 MJ/m^2 maximum average) applies.

Small amounts of lubricants.

(6) Detection Provided—Class A supervised POC in the room and manual alarm pull stations at Col. 6.6-D.0. and 6.5-E.8.

(7) Suppression Available:

Type	Location/Actuation
Standpipe and hose reel	Col. 6.6-D.0& 6.5-E.8/Manual
ABC hand extinguishers	Col.6.6-D.0 & 6.5-E.8/Manual

(8) Fire Protection Design Criteria Employed:

(a) The function is located in a separate fire-resistive enclosure.

(b) Fire detection and suppression capability is provided and accessible.

(c) Fire stops are provided for cable tray and piping penetrations through rated fire barriers.

(9) Consequences of Fire—The postulated fire assumes the loss of the function. Diesel generators A and B would not be affected.

Smoke from a fire will be removed by the EHVAC(C) system operating in its smoke removal mode.

(10) Consequences of Fire Suppression—Suppression extinguishes the fire. Refer to Section 3.4 “Water Level (Flood) Design”, for the drain system.

(11) Design Criteria Used for Protection Against Inadvertent Operation, Careless Operation or Rupture of the Suppression System:

(a) Location of manual suppression system external to the room containing the main safety-related equipment

(b) Provision of raised supports for the equipment

(c) Refer to Section 3.4 “Water Level (Flood) Design”, for the drain system.

(d) ANSI B31.1 standpipe (rupture unlikely)

(12) Fire Containment or Inhibiting Methods Employed:

(a) The functions are located in a separate fire-resistive enclosure.

(b) The means of fire detection, suppression and alarming are provided and accessible.

(13) Remarks—None.

9A.4.1.6.9 D/G (C)/Z HVAC Room (Rm No. 632)

(1) Fire Area—F4300

(2) Equipment: See Table 9A.6-2

Safety-Related	Provides Core Cooling
Yes, D3	Yes, D3

(3) Radioactive Material Present—None.

(4) Qualifications of Fire Barriers—With the exception of the exterior wall where the ventilation opening to the outside is located, the remaining walls are all of 3 h fire-resistive concrete construction. A portion of the floor over the D/G control Panel C area (Rm 536) and the entire ceiling are of a 3 h fire-resistive concrete construction. The remaining portion of the floor is within fire area F4300 and is not required to be a fire barrier. Access to this room is via a 3 h fire-resistive door from the D/G (C) equipment room (Rm 633). The pipe chase for the D/G C exhaust stack is accessed through this room.

(5) Combustibles Present:

Fire Loading	Total Heat of Combustion (MJ)
Cable Tray	727 MJ/m^2 NCLL (727 MJ/m^2 maximum average) applies.
Bag Filters	Variable, depending on the amount of dust and debris collected.

(6) Detection Provided—Class A supervised POC in the room and manual alarm pull station at Col. 6.5-E.8 and 6.6-D.0.

(7) Suppression Available:

Type	Location/Actuation
Standpipe and hose reel	Col. 6.5-E.8 & 6.6-D.0/Manual
ABC hand extinguishers	Col. 6.5-E.8 & 6.6-D.0/Manual

(8) Fire Protection Design Criteria Employed:

(a) The postulated fire assumes the loss of the function. Diesel generators A and B would not be affected.

(b) Fire detection and suppression capability is provided and accessible.

(c) Fire stops are provided for cable tray and piping penetrations through rated fire barriers.

(9) Consequences of Fire—The postulated fire assumes the loss of the function. The Provisions for core cooling systems backup. are defined in Subsection 9A.2.5.

Smoke from a fire will be removed by the emergency supply fan (C) if the diesel is running or if initiated manually.

(10) Consequences of Fire Suppression—Suppression extinguishes the fire. Refer to Section 3.4 "Water Level (Flood) Design", for the drain system.

(11) Design Criteria Used for Protection Against Inadvertent Operation, Careless Operation or Rupture of the Suppression System:

(a) Location of the manual hose suppression system external to the room

(b) Provision of raised supports for the equipment

(c) Refer to Section 3.4 "Water Level (Flood) Design", for the drain system.

(d) ANSI B31.1 standpipe (rupture unlikely)

(12) Fire Containment or Inhibiting Methods Employed:

(a) The functions are located in a separate fire-resistive enclosure.

(b) The means of fire detection, suppression and alarming are provided and accessible.

(13) Remarks—Due to the large ventilation openings in the floor, this room must be considered as an extension of the diesel generator room below.

9A.4.1.6.10 D/G Fuel Day Tank C Room (Rm No. 630)

(1) Fire Area—F6301

(2) Equipment: See Table 9A.6-2

Safety-Related	Provides Core Cooling
Yes, D3	Yes, D3

(3) Radioactive Material Present—None

(4) Qualifications of Fire Barriers—The walls, ceiling and floor serve as fire barriers between adjacent fire areas and are of 3 h fire-resistive concrete construction. Two 3 h fire-resistive doors provide access from D/G control room C (Rm 633).

(5) Combustibles Present:

Fire Loading	Total Heat of Combustion (MJ)
12,113 liters of Diesel fuel	5.28E+04

(6) Detection Provided—Class A supervised rate-compensated thermal detectors and infrared detectors. The detection system is a cross-zoned system requiring two detectors, one in each zone, to sense fire before initiating the deluge foam-water sprinkler system. The system alarms on any single detector sensing fire. Manual alarm pull stations are provided at Col. 6.5-E.8 and 6.6-D.0.

(7) Suppression Available:

Type	Location/Actuation
Deluge foam-water sprinkler system. Audible alarms are provided.	Initiated by Class A cross zone (thermal and infrared) detectors/Automatic
Standpipe and hose reel	Col. 6.5-E.8 & 6.6-D.8/Manual
ABC hand extinguishers during significant outage work.	Col. 6.5-E.8 & 6.6-D.8/Manual

(8) Fire Protection Design Criteria Employed:

(a) The function is located in a separate fire-resistive enclosure.

(b) Fire detection and suppression capability is provided and accessible.

(c) Fire stops are provided for cable tray and piping penetrations through rated fire barriers.

(9) Consequences of Fire—The postulated fire assumes the loss of the function. Diesel generators A and B would not be affected.

Smoke from a fire will be removed by the EHVAC(C) system operating in its smoke removal mode.

(10) Consequences of Fire Suppression—Suppression extinguishes the fire. Refer to Section 3.4 “Water Level (Flood) Design”, for the drain system.

(11) Design Criteria Used for Protection Against Inadvertent Operation, Careless Operation or Rupture of the Suppression System:

(a) Location of the manual suppression system external to the room containing the D/G (C) fuel day tank

(b) Provision of raised supports for the equipment

(c) Refer to Section 3.4 “Water Level (Flood) Design”, for the drain system.

(d) ANSI B31.1 standpipe (rupture unlikely)

(e) Cross-zone detectors to initiate deluge foam-water sprinkler system

(f) Provision of rate-compensated thermal detectors (less susceptible to dust and combustion products which may be in the D/G room), and infrared detectors initiating system alarms

(12) Fire Containment or Inhibiting Methods Employed:

(a) The functions are located in a separate fire-resistive enclosure.

(b) The means of fire detection, suppression and alarming are provided and accessible.

(13) Remarks—The sunken volume of the room is adequate to hold the entire contents of the day tank if an uncontrolled leak should occur.

9A.4.1.6.11 Hatch and Corridor B/C Room (Rm No. 634)

(1) Fire Area—F4301

(2) Equipment: See Table 9A.6-2

Safety-Related	Provides Core Cooling
No	No

(3) Radioactive Material Present—None that can be released as a result of fire.

(4) Qualifications of Fire Barriers—The exterior wall, and walls common to the spent fuel pool are of 3 h fire-resistive concrete construction.

One section of the floor is common to fire area F4201 on the floor below and is of 3 h fire-resistive concrete construction. Another section of the floor is over the containment and exceeds 3 h fire-resistive concrete construction. The remainder of the floor is internal to fire area F4301. An equipment hatch in room 634 is open to rooms 530 and 430 below, and room 734 above when the hatch cover in room 734 is removed. These rooms are all in the same fire area F4301. A 3 h fire-resistive door provides access to room 634 from

room 622. Room 634 connects directly into room 615 which is in the same fire area. A section of the ceiling is common to rooms 658 and 659 above (fire area F6100) and therefore is of 3 h fire-resistive concrete construction. Another section of ceiling is common to room 635 above (fire area F4300) and is also 3 h fire-resistive concrete construction. The remaining ceiling of room 634 is common to room 734 above which is in the same fire area and is not fire rated.

(5) Combustibles Present:

Fire Loading	Total Heat of Combustion (MJ)
Cable Tray	727 MJ/m^2 NCLL (727 MJ/m^2 maximum average) applies

(6) Detection Provided—Class A supervised POC in the room and manual alarm pull station at Col. 5.2-D.8 and 2.8-F.1.

(7) Suppression Available:

Type	Location/Actuation
Standpipe and hose reel	Col. 5.2-D.8 & 2.8-F.1/Manual
ABC hand extinguishers	Col. 5.2-D.8 & 2.8-F.1/Manual

(8) Fire Protection Design Criteria Employed:

(a) The function is located in a separate fire-resistive enclosure.

(b) Fire detection and suppression capability is provided and accessible.

(c) Fire stops are provided for cable tray and piping penetrations through rated fire barriers.

(9) Consequences of Fire—Alternate routes to the areas interconnected by the corridor are provided.

Smoke from a fire will be removed by the normal HVAC System operating in its smoke removal mode.

(10) Consequences of Fire Suppression—Suppression extinguishes the fire. Refer to Section 3.4 “Water Level (Flood) Design”, for the drain system.

(11) Design Criteria Used for Protection Against Inadvertent Operation, Careless Operation or Rupture of the Suppression System:

(a) Location of the manual suppression system in rooms adjacent to the corridor

(b) Refer to Section 3.4 “Water Level (Flood) Design”, for the drain system.

(c) ANSI B31.1 standpipe (rupture unlikely)

(12) Fire Containment or Inhibiting Methods Employed:

(a) The functions are located in a separate fire-resistive enclosure.

(b) The means of fire detection, suppression and alarming are provided and accessible.

(13) Remarks—None.

9A.4.1.6.12 Corridor B SLC Area (Rm No. 622)

(1) Fire Area—F4201

(2) Equipment: See Table 9A.6-2

Safety-Related	Provides Core Cooling
Yes, D1, and D2	No

(3) Radioactive Material Present—None that can be released as a result of fire.

(4) Qualifications of Fire Barriers—The ceiling, the walls common with the spent fuel pool (Rm 693), the new fuel storage pit and the new fuel inspection pit (Rms 664 and 665 respectively), the D/G (B) exhaust fan room (Rm 625), the elevator (Rm 194) and stairwell area (Rm 293) serve as fire barriers between adjacent fire areas and are of 3 h fire-resistant concrete construction. The remainder of the walls and floor are not rated as they are internal to fire area F4201. Access is provided from the elevator and stairwell, and from cross-corridor B/C (Rm 634) through a 3 h fire-resistive door. A hallway (Rm 643) opens directly into the room.

(5) Combustibles Present:

Fire Loading	Total Heat of Combustion (MJ)
None	727 MJ/m^2 NCLL (727 MJ/m^2 maximum average) applies

(6) Detection Provided—Class A supervised POC in the room and manual alarm pull stations at Col.2.8-F.1 and 2.7-C.0.

(7) Suppression Available:

Type	Location/Actuation
Standpipe and hose reel	Col. 2.7-C.0& 2.8-F.1/Manual
ABC hand extinguishers	Col. 2.7-C.0 & 2.8-F 1/ Manual

(8) Fire Protection Design Criteria Employed:

(a) The function is located in a separate fire-resistive enclosure.

(b) Fire detection and suppression capability is provided and accessible.

(c) Fire stops are provided for cable tray and piping penetrations through rated fire barriers.

(9) Consequences of Fire—The postulated fire assumes the loss of the function of equipment in the room. The systems in the room are not required to be single failure proof against fire.

Smoke from a fire will be removed by the normal HVAC System operating in its smoke removal mode.

(10) Consequences of Fire Suppression—Suppression extinguishes the fire. Refer to Section 3.4 “Water Level (Flood) Design”, for the drain system.

(11) Design Criteria Used for Protection Against Inadvertent Operation, Careless Operation or Rupture of the Suppression System:

(a) Provision of raised supports for the equipment

(b) Refer to Section 3.4 “Water Level (Flood) Design”, for the drain system.

(c) ANSI B31.1 standpipe (rupture unlikely)

(12) Fire Containment or Inhibiting Methods Employed:

(a) The functions are located in a separate fire-resistive enclosure.

(b) The means of fire detection, suppression and alarming are provided and accessible.

(13) Remarks—The SLC injection pumps and tanks are located in a curbed pit in the corridor and are vulnerable to loss by a single fire.

9A.4.1.6.13 D/G Fuel Day Tank Room B (Rm No. 620)

(1) Fire Area—F6201

(2) Equipment: See Table 9A.6-2

Safety-Related	Provides Core Cooling
Yes, D2	Yes, D2

(3) Radioactive Material Present—None

(4) Qualifications of Fire Barriers—The walls, ceiling and floor serve as fire barriers between adjacent fire areas and are of 3 h fire-resistive concrete construction. Two 3 h fire-resistive doors provide access from the D/G B equipment room (Rm 625).

(5) Combustibles Present:

Fire Loading	Total Heat of Combustion (MJ)
12,113 liters of Diesel fuel	5.28E+04

(6) Detection Provided—Class A supervised rate-compensated thermal detectors and infrared detectors. The detection system is a cross-zoned system requiring two detectors, one in each zone, to sense fire before initiating the deluge foam-water sprinkler system. The system alarms on any single detector sensing fire. Manual alarm pull stations are provided at Col.1.4-D.7.

(7) Suppression Available:

Type	Location/Actuation
Deluge foam-water sprinkler system. Audible alarms are provided.	Initiated by Class A cross zone (thermal and infrared detectors/Automatic
Standpipe and hose reel.	Col. 1.4-D.7/Manual
ABC hand extinguishers.	Col. 1.4-D.6/Manual

(8) Fire Protection Design Criteria Employed:

(a) The function is located in a separate fire-resistive enclosure.

(b) Fire detection and suppression capability is provided and accessible.

(c) Fire stops are provided for cable tray and piping penetrations through rated fire barriers.

(9) Consequences of Fire—The postulated fire assumes the loss of the function. Diesel generators A and C would not be affected.

Smoke from a fire will be removed by the EHVAC (B) system operating in its smoke removal mode.

(10) Consequences of Fire Suppression—Suppression extinguishes the fire. Refer to Section 3.4 "Water Level (Flood) Design", for the drain system.

(11) Design Criteria Used for Protection Against Inadvertent Operation, Careless Operation or Rupture of the Suppression System:

(a) Location of the manual suppression system in an area external to the room containing the main safety-related equipment

(b) Provision of raised supports for the equipment

(c) Refer to Section 3.4 "Water Level (Flood) Design", for the drain system.

(d) ANSI B31.1 standpipe (rupture unlikely)

(e) Cross-zone detectors to initiate deluge foam-water sprinkler system

(f) Provision of rate-compensated thermal detectors (less susceptible to dust and combustion products which may be in the D/G room), and infrared detectors initiating system alarms

(12) Fire Containment or Inhibiting Methods Employed:

(a) The functions are located in a separate fire-resistive enclosure.

(b) The means of fire detection, suppression and alarming are provided and accessible.

(13) Remarks—The sunken volume of the room is adequate to hold the entire contents of the day tank if an uncontrolled leak should occur.

9A.4.1.6.14 D/G (B) Equipment Room (Rm No. 625)

(1) Fire Area—F4202

(2) Equipment: See Table 9A.6-2

Safety-Related	Provides Core Cooling
Yes, D1	Yes, D1

(3) Radioactive Material Present—None that can be released as a result of fire.

(4) Qualifications of Fire Barriers—All walls are of 3 h fire-resistive construction. A section of the ceiling below the FMCRD panel room (Rm 681, fire, F7200) is of 3 h fire-resistive concrete construction. Sections of the floor above the D/G Fan and HVAC room B (Rm 524), and the service corridor B (Rm 527) are of 3 h fire-resistive concrete construction. Access to the area is provided from the stairs and elevator (areas 329 and 328 respectively), from corridor Rm 635 (via corridor Rm 626) and from the electrical equipment room (Rm 640). Each access route is through a 3 h fire-resistive door.

(5) Combustibles Present:

Fire Loading	Total Heat of Combustion (MJ)
Cable Tray	727 MJ/m^2 NCLL (727 MJ/m^2 maximum average) applies

(6) Detection Provided—Class A supervised POC in the room and manual alarm pull stations at 1.4 D.7, 1.0-B.2.

(7) Suppression Available:

Type	Location/Actuation
Standpipe and hose reel	Col. 1.4-D.7, and 1.0-B.2/Manual
ABC hand extinguishers	Col. 1.4-D.7,and 1.0-B.2/ Manual

(8) Fire Protection Design Criteria Employed:

(a) The function is located in a separate fire-resistive enclosure.

(b) Fire detection and suppression capability is provided and accessible.

(c) Fire stops are provided for cable tray and piping penetrations through rated fire barriers.

(9) Consequences of Fire—The postulated fire assumes the loss of the function. Diesel generators A and C would not be affected.

Smoke from a fire will be removed by the EHVAC (B) system operating in its smoke removal mode.

(10) Consequences of Fire Suppression—Suppression extinguishes the fire. Refer to Section 3.4 “Water Level (Flood) Design”, for the drain system.

(11) Design Criteria Used for Protection Against Inadvertent Operation, Careless Operation or Rupture of the Suppression System:

(a) Provision of raised supports for the equipment

(b) Refer to Section 3.4 “Water Level (Flood) Design”, for the drain system.

(c) ANSI B31.1 standpipe (rupture unlikely)

(12) Fire Containment or Inhibiting Methods Employed:

(a) The functions are located in a separate fire-resistive enclosure.

(b) The means of fire detection, suppression and alarming are provided and accessible.

(13) Remarks—None.

9A.4.1.6.15 D/G (B)/Z HVAC Room (Rm No. 624)

(1) Fire Area—F4200

(2) Equipment: See Table 9A.6-2

Safety-Related	Provides Core Cooling
Yes, D2	Yes, D2

(3) Radioactive Material Present—None.

(4) Qualifications of Fire Barriers—With the exception of the exterior wall where the ventilation opening to the outside is located, the remaining walls are all of a 3 h fire-resistive concrete construction. A portion of the floor above the D/G control panel B area (Rm 524) and the entire ceiling are of 3 h fire-resistive concrete construction. The remaining portion of the floor is within fire area F4200 and is not required to be a fire barrier. Access to this room is via a 3 h fire-resistive door from the D/G (B) equipment room (Rm 625). The pipe chase for the D/G B exhaust stack is accessed through this room.

(5) Combustibles Present:

Fire Loading	Total Heat of Combustion (MJ)
Cable Tray	727 MJ/m^2 NCLL (727 MJ/m^2 maximum average) applies
Bag Filters	Variable, depending on the amount of dust and debris collected.

(6) Detection Provided—Class A supervised POC in the room and manual alarm pull station at Col. 1.4-D.7 and 1.0-B.2.

(7) Suppression Available:

Type	Location/Actuation
Standpipe and hose reel.	Col. 1.4-D.7 & 1.0-B.2/Manual
ABC hand extinguishers.	Col. 1.4-D.6 & 1.0-B.2/Manual

(8) Fire Protection Design Criteria Employed:

(a) The function is located in a fire area which is separate from the fire areas containing equipment providing alternate means of performing the safety or shutdown function.

(b) Fire detection and suppression capability is provided and accessible.

(c) Fire stops are provided for cable tray and piping penetrations through rated fire barriers.

(9) Consequences of Fire—The postulated fire assumes the loss of the function. The provisions for core cooling systems backup are defined in Subsection 9A.2.5.

Smoke from a fire will be removed by the emergency supply fan (B) if the diesel is running or if initiated manually.

(10) Consequences of Fire Suppression—Suppression extinguishes the fire. Refer to Section 3.4 “Water Level (Flood) Design”, for the drain system.

(11) Design Criteria Used for Protection Against Inadvertent Operation, Careless Operation or Rupture of the Suppression System:

(a) Location of the manual hose suppression system external to the room

(b) Provision of raised supports for the equipment

(c) Refer to Section 3.4 “Water Level (Flood) Design”, for the drain system.

(d) ANSI B31.1 standpipe (rupture unlikely)

(12) Fire Containment or Inhibiting Methods Employed:

(a) The functions are located in a separate fire-resistive enclosure.

(b) The means of fire detection, suppression and alarming are provided and accessible.

(13) Remarks—Due to the large ventilation openings in the floor, this room must be considered as an extension of the diesel generator room below.

9A.4.1.6.16 ISI Inspection (Rm No. 639)

(1) Fire Area—F4301

(2) Equipment: See Table 9A.6-2

Safety-Related	Provides Core Cooling
No	No

(3) Radioactive Material Present—None.

(4) Qualification of Fire Barriers—All four walls, the floor and ceiling are internal to fire area F4301 and therefore are not fire rated.

(5) Combustibles Present—No significant amount of exposed combustibles. 727 MJ/m^2 NCLL (727 MJ/m2 maximum average) applies.

(6) Detection Provided—Class A supervised POC detection system in the room and alarm pull station at 5.2-D.8 and 5.2-B.6.

(7) Suppression Available:

Type	Location/Actuation
Standpipe and hose reel	5.2-D.8 & 5.2-B.6/Manual
ABC hand extinguishers	5.2-D.8 & 5.2-B.6/Manual

(8) Fire Protection Design Criteria Employed:

(a) Fire detection and suppression capability is provided and accessible.

(b) Fire stops are provided for cable tray and piping penetration through rated fire barriers.

(9) Consequences of Fire—The postulated fire assumes the loss of the function.

Smoke from a fire will be removed by the normal HVAC System operating in its smoke removal mode.

(10) Consequences of Fire Suppression—Suppression extinguishes the fire. Refer to Section 3.4 “Water Level (Flood) Design”, for the drain system.

(11) Design Criteria Used for Protection Against Inadvertent Operation, Careless Operation or Rupture of the Suppression System:

(a) Location of the manual hose suppression system external to the room

(b) Provision of raised supports for the equipment

(c) Refer to Section 3.4 “Water Level (Flood) Design”, for the drain system.

(d) ANSI B31.1 standpipe (rupture unlikely)

(12) Fire Containment or Inhibiting Methods Employed:

(a) The functions are located in a separate fire-resistive enclosure.

(b) The means of fire detection, suppression and alarming are provided and accessible.

(13) Remarks—None.

9A.4.1.6.17 Not Used

9A.4.1.6.18 Not Used

9A.4.1.6.19 Corridor D (Rm No. 643)

(1) Fire Area—F4201

(2) Equipment—See Table 9A.6-2

Safety-Related	Provides Core Cooling
No	No

(3) Radioactive Material Present—None.

(4) Qualifications of Fire Barriers—The walls common with the electrical equipment room (Rm 640), the SGTS A filter train room (Rm 642), corridor room (Rm 614), the floor above the steam tunnel and the ceiling serve as fire barriers between adjacent fire areas and are of 3 h fire-resistive concrete construction. A 3 h fire rated door provides access from the AC filter/fan area (Rm 615). Room 643 connects directly into room 622.

(5) Combustibles Present:

Fire Loading	Total Heat of Combustion (MJ)
Cable Tray	727 MJ/m^2 NCLL (727 MJ/m^2 maximum average) applies

(6) Detection Provided—Class A supervised POC in the room and manual alarm pull stations at 2.7-C.0 and 2.8-F.1.

(7) Suppression Available:

Type	Location/Actuation
Standpipe and hose reel	Col. 2.7-C.0,& 2.8-F.1/Manual
ABC hand extinguishers	Col. 2.7-C.0,& 2.8-F.1/Manual

(8) Fire Protection Design Criteria Employed:

(a) The function is located in a separate fire-resistive enclosure.

(b) Fire detection and suppression capability is provided and accessible.

(c) Fire stops are provided for cable tray and piping penetrations through rated fire barriers.

(9) Consequences of Fire—The postulated fire assumes the loss of the function. Loss of the SGTS by an exposure fire is acceptable.

Smoke from a fire will be removed by the normal HVAC System operating in its smoke removal mode.

(10) Consequences of Fire Suppression—Suppression extinguishes the fire. Refer to Section 3.4 “Water Level (Flood) Design”, for the drain system.

(11) Design Criteria Used for Protection Against Inadvertent Operation, Careless Operation or Rupture of the Suppression System:

(a) Provision of raised supports for the equipment

(b) Refer to Section 3.4 “Water Level (Flood) Design”, for the drain system.

(c) ANSI B31.1 standpipe (rupture unlikely)

(12) Fire Containment or Inhibiting Methods Employed:

(a) The functions are located in a separate fire-resistive enclosure.

(b) The means of fire detection, suppression and alarming are provided and accessible.

(13) Remarks—None.

9A.4.1.6.20 SGTS B Division 2 Room (Rm No. 641)

(1) Fire Area—F4201

(2) Equipment: See Table 9A.6-2

Safety-Related	Provides Core Cooling
Yes, D2	No

(3) Radioactive Material Present—Filters within their housing may become contaminated with use. Releases up the stack could occur as a result of fire. However, the system is capable of being isolated in case of any fire, and burn itself out by cutting the oxygen to the fire.

(4) Qualifications of Fire Barriers—The walls common with the electrical equipment room (Rm 640), the SGTS A division 3 room (Rm 642), the ceiling, and a section of the floor common to fire area F3400 (Rm 543) below serve as fire barriers between adjacent fire areas and are of 3 h fire-resistive concrete construction. The remainder of the floor (not common to F3400), the wall common with SLC Area and corridor B room 622 are not rated as they are internal to fire area F4201. A non-fire rated door provides access from corridor D (Rm 643).

(5) Combustibles Present:

Fire Loading	Total Heat of Combustion (MJ)
Cable Tray	727 MJ/m^2 NCLL (727 MJ/m^2 maximum average) applies

(6) Detection Provided—Class A supervised POC in the room and manual alarm pull station at Col. 2.7-C.0 and 2.8-F.1.

(7) Suppression Available:

Type	Location/Actuation
Standpipe and hose reel	Col. 2.7-C.0 & 2.8-F.1/Manual
ABC hand extinguishers	Col. 2.7-C.0 & 2.8-F.2/Manual

(8) Fire Protection Design Criteria Employed:

(a) The function is located in a separate fire-resistive enclosure.

(b) Fire detection and suppression capability is provided and accessible.

(c) Fire stops are provided for cable tray and piping penetrations through rated fire barriers.

(9) Consequences of Fire—The postulated fire assumes loss of function. The complete loss of the SGTS B as a consequence of a single fire is acceptable. Functional backup is provided by SGTS A (Div. III).

Smoke from a fire will be removed by the normal HVAC System operating in its smoke removal mode.

(10) Consequences of Fire Suppression—Suppression extinguishes the fire. Refer to Section 3.4 “Water Level (Flood) Design”, for the drain system.

(11) Design Criteria Used for Protection Against Inadvertent Operation, Careless Operation or Rupture of the Suppression System:

(a) Location of the manual suppression system in the corridor, external to the rooms containing the main safety-related equipment

(b) Provision of raised supports for the equipment

(c) Refer to Section 3.4 “Water Level (Flood) Design”, for the drain system.

(d) ANSI B31.1 standpipe (rupture unlikely)

(12) Fire Containment or Inhibiting Methods Employed:

(a) The functions are located in a separate fire-resistive enclosure.

(b) The means of fire detection, suppression and alarming are provided and accessible.

(13) Remarks—None.

9A.4.1.6.21 SGTS A Division 3 Room (Rm No. 642)

(1) Fire Area—F4301

(2) Equipment: See Table 9A.6-2

Safety-Related	Provides Core Cooling
Yes, D3	No

(3) Radioactive Material Present—Filters within their housings may become contaminated with use. Releases up the stack could occur as a result of fire. However, the system is capable to be isolated in case of any fire, and burn itself out by cutting off the oxygen to the fire.

(4) Qualification of Fire Barriers—The walls and floor serve as fire barriers between adjacent fire areas and are of 3 h fire-resistive concrete construction. The ceiling is common with the fire area above (F4301), therefore is not required to be of a 3 h fire barrier. A 3 h fire-resistive curbed door provides access from the corridor D (Rm 643).

(5) Combustibles Present:

Fire Loading	Total Heat of Combustion (MJ)
Cable Tray	727 MJ/m^2 NCLL (727 MJ/m^2 maximum average) applies

(6) Detection Provided—Class A supervised POC in the room and manual alarm pull station at Col. 2.7-C.0 and 2.8-F1.

(7) Suppression Available:

Type	Location/Actuation
Standpipe and hose reel	Col. 2.7-C.0 & 2.8-F1/Manual
ABC hand extinguishers	Col. 2.7-C.0 & 2.8-F2/Manual

(8) Fire Protection Design Criteria Employed:

(a) The function is located in a separate fire-resistive enclosure.

(b) Fire detection and suppression capability is provided and accessible.

(c) Fire stops are provided for cable tray and piping penetrations through rated fire barriers.

(9) Consequences of Fire—The postulated fire assumes loss of function. The complete loss of the SGTS A as a consequence of a single fire is acceptable. Functional backup is provided by SGTS B (Div. II).

Smoke from a fire will be removed by the normal HVAC System operating in its smoke removal mode.

(10) Consequences of Fire Suppression—Suppression extinguishes the fire. Refer to Section 3.4 “Water Level (Flood) Design”, for the drain system.

(11) Design Criteria Used for Protection Against Inadvertent Operation, Careless Operation or Rupture of the Suppression System:

(a) Location of the manual suppression system in the corridor, external to the rooms containing the main safety-related equipment

(b) Provision of raised supports for the equipment

(c) Refer to Section 3.4 “Water Level (Flood) Design”, for the drain system.

(d) ANSI B31.1 standpipe (rupture unlikely)

(12) Fire Containment or Inhibiting Methods Employed:

(a) The functions are located in a separate fire-resistive enclosure.

(b) The means of fire detection, suppression and alarming are provided and accessible.

(13) Remarks—None.

9A.4.1.6.22 Not Used

9A.4.1.6.23 Not Used

9A.4.1.6.24 Upper D/G A HVAC Room (Rm No. 653)

(1) Fire Area—F4102

(2) Equipment: See Table 9A.6-2

Safety-Related	Provides Core Cooling
Yes, D1	Yes, D1

(3) Radioactive Material Present—None that can be released as a result of fire.

(4) Qualifications of Fire Barriers—The walls in common with stairwell (Rm 292), the duct space next to the stairwell, the valve maintenance room (Rm 616), the FMCRD panel room (Rm 654), one exterior wall, sections of the floor over Rooms 610, 612, 613 and the ceiling serve as fire barriers between adjacent fire areas and are of 3 h fire-resistive concrete construction. The remainder of the walls and floor are not fire rated as they are internal to fire area F4102. One exterior wall has ventilation openings to the outside and therefore is not fire rated. Access to room 653 is provided from room 654 through a 3 h fire-resistive door. One corner of the floor has a 1.75 meter step up in it to provide more space for the day tank in the room below.

(5) Combustibles Present:

Fire Loading	Total Heat of Combustion (MJ)
Cable Tray	727 MJ/m^2 NCLL (727 MJ/m^2 maximum average) applies
Bag Filters	Variable, depending on the amount of dust and debris collected.

(6) Detection Provided—Class A supervised POC in the room and manual alarm pull stations at 6.8 C.0, 6.4-E.5.

(7) Suppression Available:

Type	Location/Actuation
Standpipe and hose reel	Col. 6.8-C.0 and 6.4-E.5/Manual
ABC hand extinguishers	Col. 6.8-C.0 and 6.4-E.5/Manual

(8) Fire Protection Design Criteria Employed:

(a) The function is located in a separate fire-resistive enclosure.

(b) Fire detection and suppression capability is provided and accessible.

(c) Fire stops are provided for cable tray and piping penetrations through rated fire barriers.

(9) Consequences of Fire—The postulated fire assumes the loss of the function. Diesel generators B and C would not be affected.

Smoke from a fire will be removed by the EHVAC (A) system operating in its smoke removal mode.

(10) Consequences of Fire Suppression—Suppression extinguishes the fire. Refer to Section 3.4 “Water Level (Flood) Design”, for the drain system.

(11) Design Criteria Used for Protection Against Inadvertent Operation, Careless Operation or Rupture of the Suppression System:

(a) Provision of raised supports for the equipment

(b) Refer to Section 3.4 “Water Level (Flood) Design”, for the drain system.

(c) ANSI B31.1 standpipe (rupture unlikely)

(12) Fire Containment or Inhibiting Methods Employed:

(a) The functions are located in a separate fire-resistive enclosure.

(b) The means of fire detection, suppression and alarming are provided and accessible.

(13) Remarks—None.

9A.4.1.6.25 FMCRD A/C Panel Room (Rm No. 654)

(1) Fire Area—F3300

(2) Equipment: See Table 9A.6-2

Safety-related	Provides Core Cooling
Yes, D1,D3	Yes, D1

(3) Radioactive Material Present—None that can be released as a result of fire.

(4) Qualifications of Fire Barriers—The walls in common with the D/G A supply fan room (Rm 653), the D/G C supply fan room (Rm 673), the valve maintenance room (Rm 616), the stairwell (Rm 316), the elevator (Rm 317), the exterior wall, and two sections of floor over rooms 613 and 633 below (fire areas F4100 and F4300 respectively) are of 3 h fire-resistive concrete construction. The ceiling is not fire rated as it is internal to fire area F3300. Access to room 654 is provided from the stairwell (Rm 316), the elevator (Rm 317) and rooms 653 and 673 through 3 h fire-resistive doors.

(5) Combustibles Present:

Fire Loading	Total Heat of Combustion (MJ)
Cable Tray	727 MJ/m^2 NCLL (727 MJ/m^2 maximum average) applies

(6) Detection Provided—Class A supervised POC in the room and manual alarm pull stations at 6.8 C.0 and 6.4-E.5.

(7) Suppression Available:

Type	Location/Actuation
Standpipe and hose reel 1.1-D.0/Manual	Col. 6.8-C.0, and 6.4-E.5/ Manual
ABC hand extinguishers	Col. 6.8-C.0, and 6.4-E.5/ Manual

(8) Fire Protection Design Criteria Employed:

(a) The function is located in a separate fire-resistive enclosure.

(b) Fire detection and suppression capability is provided and accessible.

(c) Fire stops are provided for cable tray and piping penetrations through rated fire barriers.

(9) Consequences of Fire—The postulated fire assumes the loss of the function. See Section 9A.5 for explanation of consequences of fire on the FMRCD system.

Smoke from a fire will be removed by the EHVAC(C) system operating in its smoke removal mode.

(10) Consequences of Fire Suppression—Suppression extinguishes the fire. Refer to Section 3.4 “Water Level (Flood) Design”, for the drain system.

(11) Design Criteria Used for Protection Against Inadvertent Operation, Careless Operation or Rupture of the Suppression System:

(a) Provision of raised supports for the equipment

(b) Refer to Section 3.4 “Water Level (Flood) Design”, for the drain system.

(c) ANSI B31.1 standpipe (rupture unlikely)

(12) Fire Containment or Inhibiting Methods Employed:

(a) The functions are located in a separate fire-resistive enclosure.

(b) The means of fire detection, suppression and alarming are provided and accessible.

(13) Remarks—None.

9A.4.1.6.26 Not Used

9A.4.1.6.27 Not Used

9A.4.1.6.28 Not Used

9A.4.1.6.29 Not Used

9A.4.1.6.30 Upper D/G C HVAC Room (Rm No. 673)

(1) Fire Area—F4302

(2) Equipment: See Table 9A.6-2

Safety-Related	Provides Core Cooling
Yes, D3	Yes, D3

(3) Radioactive Material Present—None.

(4) Qualifications of Fire Barriers—The walls in common with the day tank C room, the SRV/MSIV maintenance room (Rm 616), the FMCRD panel room (Rm 654), the exterior walls, sections of floor over the day tank C room (Rm 630), the D/G (C)/Z HVAC Room (Rm 632) and the section of ceiling in common with fire area F3300 (Rm 715) are of 3 h fire-resistive concrete construction. The remaining walls, floor and ceiling are not fire rated as they are internal to fire area F4302. Access to room 673 is from room 654 through 3 h fire-resistive doors.

(5) Combustibles Present:

Fire Loading	Total Heat of Combustion (MJ)
Cable Tray	727 MJ/m^2 NCLL (727 MJ/m^2 maximum average) applies
Bag Filters	Variable, depending on the amount of dust and debris collected

(6) Detection Provided—Class A supervised POC in the room and manual alarm pull stations at 6.8-C.0 and 6.4-E.5.

(7) Suppression Available:

Type	Location/Actuation
Standpipe and hose reel	Col. 6.8-C.0, 6.4-E.5/Manual
ABC hand extinguishers	Col. 6.8-C.0, 6.4-E.5/Manual

(8) Fire Protection Design Criteria Employed:

(a) The function is located in a separate fire-resistive enclosure.

(b) Fire detection and suppression capability is provided and accessible.

(c) Fire stops are provided for cable tray and piping penetrations through rated fire barriers.

(9) Consequences of Fire—The postulated fire assumes the loss of the function. Diesel generators A and B would not be affected.

Smoke from a fire will be removed by the EHVAC(C) system operating in its smoke removal mode.

(10) Consequences of Fire Suppression—Suppression extinguishes the fire. Refer to Section 3.4 “Water Level (Flood) Design”, for the drain system.

(11) Design Criteria Used for Protection Against Inadvertent Operation, Careless Operation or Rupture of the Suppression System:

(a) Location of two manual suppression systems external to the room containing the main safety-related equipment

(b) Provision of raised supports for the equipment

(c) Refer to Section 3.4 “Water Level (Flood) Design”, for the drain system.

(d) ANSI B31.1 standpipe (rupture unlikely)

(12) Fire Containment or Inhibiting Methods Employed:

(a) The functions are located in a separate fire-resistive enclosure.

(b) The means of fire detection, suppression and alarming are provided and accessible.

(13) Remarks—None.

9A.4.1.6.31 Not Used

9A.4.1.6.32 Upper D/G B HVAC Room (Rm No. 663)

(1) Fire Area—F4202

(2) Equipment: See Table 9A.6-2

Safety-Related	Provides Core Cooling
Yes, D2	Yes, D2

(3) Radioactive Material Present—None.

(4) Qualifications of Fire Barriers—One exterior wall, the walls in common with the FMCRD panel room (Rm 681), the day tank room (Rm 620), the PVC purge exhaust fan room (Rm 623), the section of floor over the day tank room (Rm 620), the D/G (B)/Z HVAC room (Rm 624), and ceiling are of 3 h fire-resistive concrete construction. The remainder of the concrete floor is internal to fire area F4202 and the remaining concrete exterior wall has a ventilation opening to the outside, therefore they are not fire rated. Access to room 663 is through a 3 h fire-resistive door from room 681.

(5) Combustibles Present:

Fire Loading	Total Heat of Combustion (MJ)
Cable Tray	727 MJ/m^2 NCLL (727 MJ/m^2 maximum average) applies
Bag Filters	Variable, depending on the amount of dust and debris collected.

(6) Detection Provided—Class A supervised POC in the room and manual alarm pull station at Col. 1.4-E.0 and 1.7-C.0.

(7) Suppression Available:

Type	Location/Actuation
Standpipe and hose reel	Col. 1.4-E.0 & 1.7-C.0/Manual
ABC hand extinguishers	Col. 1.4-E.0 & 1.7-C.0/Manual

(8) Fire Protection Design Criteria Employed:

(a) The function is located in a fire area which is separate from the fire areas containing equipment providing alternate means of performing the safety or shutdown function.

(b) Fire detection and suppression capability is provided and accessible.

(c) Fire stops are provided for cable tray and piping penetrations through rated fire barriers.

(9) Consequences of Fire—The postulated fire assumes the loss of the function. The Provisions for core cooling systems backup are defined in Subsection 9A.2.5.

Smoke from a fire will be removed by the EHVAC(B) system operation in its smoke removal mode.

(10) Consequences of Fire Suppression—Suppression extinguishes the fire. Refer to Section 3.4 “Water Level (Flood) Design”, for the drain system.

(11) Design Criteria Used for Protection Against Inadvertent Operation, Careless Operation or Rupture of the Suppression System:

(a) Location of the manual hose suppression system external to the room

(b) Provision of raised supports for the equipment

(c) Refer to Section 3.4 “Water Level (Flood) Design”, for the drain system.

(d) ANSI B31.1 standpipe (rupture unlikely)

(12) Fire Containment or Inhibiting Methods Employed:

(a) The functions are located in a separate fire-resistive enclosure.

(b) The means of fire detection, suppression and alarming are provided and accessible.

(13) Remarks—None.

9A.4.1.6.33 Upper Corridor B (Rm No. 626)

(1) Fire Area—F4200

(2) Equipment: See Table 9A.6-2

Safety-Related	Provides Core Cooling
No	No

(3) Radioactive Material Present—None that can be released as a result of fire.

(4) Qualifications of Fire Barriers—The ceiling, the building exterior wall, the wall common with the SLC Area (Rm 622), the wall common with D/G fuel day tank room (Rm 620), the wall common with the stair well (Rm 193), and the portion of the floor over SLC Area (Rm 622) serves as a fire barriers of 3 h fire-resistive concrete construction. The remaining wall and floor are not fire rated as they are within fire area F4200. Access to this room is provided via a 3 h fire-resistive door from DG (C) corridor (Rm 635), and via a non-rated door from DG (B) equipment room (Rm 625).

(5) Combustibles Present:

Fire Loading	Total Heat of Combustion (MJ)
None	727 MJ/m^2 NCLL (727 MJ/m^2 maximum average) applies

(6) Detection Provided—Class A supervised POC in the room and manual alarm pull stations at Col. 1.4-D.7.

(7) Suppression Available:

Type	Location/Actuation
Standpipe and hose reel	Col. 1.4-D.7/ Manual
ABC hand extinguishers	Col. 1.4-D.7/ Manual

(8) Fire Protection Design Criteria Employed:

(a) The function is located in a separate fire-resistive enclosure.

(b) Fire detection and suppression capability is provided and accessible.

(c) Fire stops are provided for cable tray and piping penetrations through rated fire barriers.

(9) Consequences of Fire—The postulated fire assumes the loss of the function of the corridor. Alternate access routes are available.

Smoke from a fire will be removed by the normal HVAC System operating in its smoke removal mode.

(10) Consequences of Fire Suppression—Suppression extinguishes the fire. Refer to Section 3.4 “Water Level (Flood) Design”, for the drain system.

(11) Design Criteria Used for Protection Against Inadvertent Operation, Careless Operation or Rupture of the Suppression System:

(a) Refer to Section 3.4 “Water Level (Flood) Design”, for the drain system.

(b) ANSI B31.1 standpipe (rupture unlikely)

(12) Fire Containment or Inhibiting Methods Employed:

(a) The functions are located in a separate fire-resistive enclosure.

(b) The means of fire detection, suppression and alarming are provided and accessible.

(c) Provision of curbs for doorways.

(13) Remarks—None.

9A.4.1.6.34 Not Used

9A.4.1.6.35 FMCRD D/B Panel Room (Rm No. 681)

(1) Fire Area—F7200

(2) Equipment: See Table 9A.6-2

Safety-Related	Provides Core Cooling
Yes, D2 & D3	No

(3) Radioactive Material Present—None that can be released as a result of fire.

(4) Qualifications of Fire Barriers—All walls, the ceiling, and the floor are of 3 h fire-resistive concrete construction. Access to room 681 is from stair well (Rm 329) and elevator (Rm 328) via 3 h rated fire-resistive doors. The room provides access to D/G B upper fan room (Rm 663) and to the electrical room (Rm 680) through 3 h rated fire-resistive doors.

(5) Combustibles Present:

Fire Loading	Total Heat of Combustion (MJ)
Cable Tray	727 MJ/m2 NCLL (727 MJ/m^2 maximum average) applies

(6) Detection Provided—Class A supervised POC in the room and manual alarm pull stations at 1.4-E.0, 1.7-C.0.

(7) Suppression Available:

Type	Location/Actuation
Standpipe and hose reel	Col. 1.4-E.0, and 1.7-C.0/Manual
ABC hand extinguishers	Col. 1.4-E.0, and 1.7-C.0/Manual

(8) Fire Protection Design Criteria Employed:

(a) The function is located in a separate fire-resistive enclosure.

(b) Fire detection and suppression capability is provided and accessible.

(c) Fire stops are provided for cable tray and piping penetrations through rated fire barriers.

(9) Consequences of Fire—The postulated fire assumes the loss of the function. The effects of fire on the FMCRD system are discussed in Section 9A.5.

Smoke from a fire will be removed by the EHVAC(B) system operating in its smoke removal mode.

(10) Consequences of Fire Suppression—Suppression extinguishes the fire. Refer to Section 3.4 “Water Level (Flood) Design”, for the drain system.

(11) Design Criteria Used for Protection Against Inadvertent Operation, Careless Operation or Rupture of the Suppression System:

(a) Provision of raised supports for the equipment

(b) Refer to Section 3.4 “Water Level (Flood) Design”, for the drain system.

(c) ANSI B31.1 standpipe (rupture unlikely)

(12) Fire Containment or Inhibiting Methods Employed:

(a) The functions are located in a separate fire-resistive enclosure.

(b) The means of fire detection, suppression and alarming are provided and accessible.

(13) Remarks—None.

9A.4.1.6.36 Not Used

9A.4.1.6.37 Not Used

9A.4.1.6.38 MS Tunnel HVH Room (Rm No. 685)

(1) Fire Area—F4201

(2) Equipment: See Table 9A.6-2

Safety-Related	Provides Core Cooling
No	No

(3) Radioactive Material Present—None that can be released as a result of fire.

(4) Qualifications of Fire Barriers—All walls and the ceiling serve as fire barriers and are of 3hr fire-resistive concrete. The floor is concrete but is non rated as it is internal to fire area F4201. Access to this room is a stairway leading form a lower area internal to fire area F4201.

(5) Combustibles Present:

Fire Loading	Total Heat of Combustion (MJ)
Cable Tray	727 MJ/m^2 NCLL (727 MJ/m^2 maximum average) applies

(6) Detection Provided—Class A supervised POC detection system in the room and manual alarm pull stations at Col. 2.7-C.0. (El. 23500 mm).

(7) Suppression Available:

Type	Location/Actuation
Standpipe and hose reel	Col.2.7-C.0/Manual
ABC hand extinguishers	Col.2.7-C.0/Manual

(8) Fire Protection Design Criteria Employed:

(a) The function is located in a separate fire-resistive enclosure.

(b) Fire detection and suppression capability is provided and accessible.

(c) Fire stops are provided for cable tray and piping penetrations through rated fire barriers.

(9) Consequences of Fire—The postulated fire assumes loss of the function. There are no emergency core cooling or safe shutdown system components in the area.

Smoke from a fire will be removed by the normal HVAC System operating in its smoke removal mode.

(10) Consequences of Fire Suppression—Suppression extinguishes the fire. Refer to Section 3.4 “Water Level (Flood) Design”, for the drain system.

(11) Design Criteria Used for Protection Against Inadvertent Operation, Careless Operation or Rupture of the Suppression System:

(a) Location of the manual hose suppression system external to the room

(b) Provision of raised supports for the equipment

(c) Refer to Section 3.4 “Water Level (Flood) Design”, for the drain system.

(d) ANSI B31.1 standpipe (rupture unlikely)

(12) Fire Containment or Inhibiting Methods Employed:

(a) The functions are located in a separate fire-resistive enclosure.

(b) The means of fire detection, suppression and alarming are provided and accessible.

(13) Remarks—None.

9A.4.1.6.39 Pits and Pools

(1) Fire Area—See individual pits and pools location.

The following pits and pools occupy space at this elevation of the building:

(a) New Fuel Storage Pit (Rm 664)

(b) Cask Washdown Pit (Rm 674)

(c) D/S Transfer Canal (Rm 688)

(d) D/S Pit (Rm 690)

(e) Drywell Head Annulus (Rm 691)

(f) Upper Drywell Head (Rm 692)

(g) Fuel Transfer Canal (Rm 694)

(h) Fuel Handling Pool (Rm 693)

(i) Fuel Storage Pool (Rm 539)

(j) Cask Pit (Rm 697)

(k) New Fuel Inspection Pit (Rm 665)

(2) Equipment: See Table 9A.6-2

Safety-Related	Provides Core Cooling
Yes	No

(3) Radioactive Material Present—None that can be released as the result of a fire.

(4) All of the listed pits and pools are accessed from the operating floor and are not accessible at this elevation. For this reason, there is no effect on the fire protection features at this elevation. See the discussion for the operating floor for applicable fire protection feature. No further comments will be made in the analysis for this elevation.

9A.4.1.6.40 PVC Purge Exhaust Fan (Rm No. 623)

(1) Fire Area—F4201

(2) Equipment: See Table 9A.6-2

Safety-Related	Provides Core Cooling
No	No

(3) Radioactive Material Present—None that can be released as the result of a fire.

(4) Qualification of Fire Barrier—One wall is common to the D/G exhaust fan room 625 and another is common to corridor 626 and stairwell 293. These walls are of 3 h fire-resistive concrete construction. The remaining walls and floor are internal to fire area F4201 and are not fire rated. A section of the ceiling is common to a sunken section of room 721 (fire area F4301) and is of 3 h fire-resistive concrete construction. The remainder of the ceiling is internal to fire area F4201 and is not fire rated.

(5) Combustibles Present—No significant amount of exposed combustibles.

(6) Detection Provided—Class A supervised POC detection system in the room and alarm pull station at Col. 2.8-F.1 and 2.7-C.0.

(7) Suppression Available:

Type	Location/Actuation
Standpipe and hose reel	Col. 2.8-F.1 & 2.7-C.0/Manual
ABC hand extinguishers	Col. 2.8-F.1 & 2.7-C.0/Manual

(8) Fire Protection Design Criteria Employed:

(a) Fire detection and suppression capability is provided and acceptable.

(b) Fire stops are provided for cable tray and piping penetration through rated fire barriers.

(9) Consequences of Fire—The postulated fire assumes the loss of the function.

Smoke from a fire will be removed by the normal HVAC System operating in its smoke removal mode.

(10) Consequences of Fire Suppression—Suppression extinguishes the fire. Refer to Section 3.4 “Water Level (Flood) Design”, for the drain system.

(11) Design Criteria Used for Protection Against Inadvertent Operation, Careless Operation or Rupture of the Suppression System:

(a) Location of the manual suppression system external to the room

(b) Provision of raised supports for the equipment

(c) Refer to Section 3.4 “Water Level (Flood) Design”, for the drain system.

(d) ANSI B31.1 standpipe (rupture unlikely)

(12) Fire Containment or Inhibiting Methods Employed:

(13) Remarks—None.

9A.4.1.6.41 D/G C Corridor Room (Rm No. 635)

(1) Fire Area—F4300

(2) Equipment: See Table 9A.6-2

Safety-Related	Provides Core Cooling
Yes, D3	Yes, D3

(3) Radioactive Material Present—None

(4) Qualifications of Fire Barriers—All walls, the ceiling, and sections of the floor of corridor 635 that are not common to fire area F4300, are of 3 h fire-resistive concrete construction. A 3 h fire rated door connects corridor room 626 to corridor room 635. Access to corridor 635 is also provided from diesel generator room (Rm 633) through a non-fire-rated door.

(5) Combustibles Present:

Fire Loading	Total Heat of Combustion (MJ)
Cable Tray	727 MJ/m^2 NCLL (727 MJ/m^2 maximum average) applies

(6) Detection Provided—Class A supervised POC in the room and manual alarm pull station at Col. 6.5-E.8 and 1.4-D.7.

(7) Suppression Available:

Type	Location/Actuation
Standpipe and hose reel	Col. 6.5-E.8 & 1.4-D.7/Manual
ABC hand extinguishers	Col. 6.5-E.8 & 1.4-D.7/Manual

(8) Fire Protection Design Criteria Employed:

(a) Fire detection and suppression capabilities provided and accessible.

(b) Fire detection and suppression capability is provided and accessible.

(c) Fire stops are provided for cable tray and piping penetrations through fire rated fire barriers.

(9) Consequences of Fire—The postulated fire assumes the loss of the function.

Smoke from a fire will be removed by the EHVAC(C) system operating in its smoke removal mode.

(10) Consequences of Fire Suppression—Suppression extinguishes the fire. Refer to Section 3.4 “Water Level (Flood) Design”, for the drain system.

(11) Design Criteria Used for Protection Against Inadvertent Operation, Careless Operation or Rupture of the Suppression System:

(a) Location of the manual suppression system external to the room

(b) Refer to Section 3.4 “Water Level (Flood) Design”, for the drain system.

(c) ANSI B31.1 standpipe (rupture unlikely)

(12) Fire Containment or Inhibiting Methods Employed:

(a) The functions are located in a separate fire-resistive enclosure.

(b) The means of fire detection, suppression and alarming are provided and accessible.

(13) Remarks—None.

9A.4.1.6.42 RIP Power Supply Room (Rm No. 638)

(1) Fire Area—F3300

(2) Equipment: See Table 9A.6-2

Safety-Related	Provides Core Cooling
No	No

(3) Radioactive Material Present—None

(4) Qualification of Fire Barriers —All walls and a section of the floor common to rooms 510 and 530 below (fire areas F4101 and F4301 respectively) are of 3 h fire-resistive concrete construction. The remainder of the floor and the ceiling is internal to fire area F3300 and is not fire rated.

(5) Combustibles Present—No significant amount of exposed combustibles. 727 MJ/m^2 NCLL (727 MJ/m^2 maximum average) applies.

(6) Detection Provided—Class A supervised POC detection system in the room and alarm pull station at 6.2-B.0, 6.6-D.0 and 6.5-E.8 El 23500.

(7) Suppression Available:

Type	Location/Actuation
Standpipe and hose reel	6.2-B.0, 6.6-D.0 & 6.5-E.8 El 23500/Manual
ABC hand extinguishers	6.2-B.0, 6.6-D.0 & 6.5-E.8 El 23500/Manual

(8) Fire Protection Design Criteria Employed:

(a) The function is located in a separate fire-resistive enclosure.

(b) Fire detection and suppression capability is provided and accessible.

(c) Fire stops are provided for cable tray and piping penetration through rated fire barriers.

(9) Consequences of Fire—The postulated fire assumes the loss of the function.

Smoke from a fire will be removed by the EHVAC(C) system operating in its smoke removal mode.

(10) Consequences of Fire Suppression—Suppression extinguishes the fire. Refer to Section 3.4 “Water Level (Flood) Design”, for the drain system.

(11) Design Criteria Used for Protection Against Inadvertent Operation, Careless Operation or Rupture of the Suppression System:

(a) Location of the manual hose suppression system external to the room

(b) Provision of raised supports for the equipment

(c) Refer to Section 3.4 "Water Level (Flood) Design", for the drain system.

(d) ANSI B31.1 standpipe (rupture unlikely)

(12) Fire Containment or Inhibiting Methods Employed:

(a) The functions are located in a separate fire-resistive enclosure.

(b) The means of fire detection, suppression and alarming are provided and accessible.

(13) Remarks—None.

9A.4.1.6.43 Electrical Equipment Room (Rm No. 640)

(1) Fire Area—F6200

(2) Equipment: See Table 9A.6-2

Safety-Related	Provides Core Cooling
No	No

(3) Radioactive Material Present—None that can be released as a result of fire.

(4) Qualifications of Fire Barriers—All walls and the floor are of 3 h fire-resistive concrete construction. A section of the ceiling is common to the FMCRD room (Rm 681) above and is of 3 h fire-resistive concrete construction. The remainder of the ceiling is internal to fire area F6200 and is not fire rated. Access is provided from rooms 625 and 614 through 3 h fire-resistive doors.

(5) Combustibles Present:

Fire Loading	Total Heat of Combustion (MJ)
Cable Tray	727 MJ/m^2 NCLL (727 MJ/m^2 maximum average) applies

(6) Detection Provided—Class A supervised POC in the room and manual alarm pull stations at 1.0-B.2 and 1.4-D.7.

(7) Suppression Available:

Type	Location/Actuation
Standpipe and hose reel	Col. 1.0-B.2 & 1.4-D.7/Manual
ABC hand extinguishers	Col. 1.0-B.2 & 1.4-D.7/Manual

(8) Fire Protection Design Criteria Employed:

(a) The function is located in a room separate from the rooms which contain safety-related equipment.

(b) Fire detection and suppression capability is provided and accessible.

(c) Fire stops are provided for cable tray and piping penetrations through rated fire barriers.

(9) Consequences of Fire—The postulated fire assumes the loss of the function.

Smoke from a fire will be removed by the EHVAC(B) system operating in its smoke removal mode.

(10) Consequences of Fire Suppression—Suppression extinguishes the fire. Refer to Section 3.4 “Water Level (Flood) Design”, for the drain system.

(11) Design Criteria Used for Protection Against Inadvertent Operation, Careless Operation or Rupture of the Suppression System:

(a) Provision of raised supports for the equipment

(b) Refer to Section 3.4 “Water Level (Flood) Design”, for the drain system.

(c) ANSI B31.1 standpipe (rupture unlikely)

(12) Fire Containment or Inhibiting Methods Employed:

(a) The functions are located in a separate fire-resistive enclosure.

(b) The means of fire detection, suppression and alarming are provided and accessible.

(13) Remarks—None.

9A.4.1.6.44 Fission Product Monitoring (Rm No. 657)

(1) Fire Area—F4301

(2) Equipment: See Table 9A.6-2

Safety-Related	Provides Core Cooling
Yes, D3	No

(3) Radioactive Material Present—None that can be released as the result of a fire.

(4) Qualification of Fire Barriers—All four walls, the ceiling floor and door are internal to fire area F4301 and therefore are not fire rated. Access to Rm 657 is provided via a stairwell from Rm 615 on the floor below.

(5) Combustibles Present—No significant amount of exposed combustibles. 727 MJ/m^2 NCLL (727 MJ/m^2 maximum average) applies.

(6) Detection Provided—Class A supervised POC detection system in the room and alarm pull station at 5.2-D.8 and 5.2-B.6, elevation 23500 mm.

(7) Suppression Available:

Type	Location/Actuation
Standpipe and hose reel	5.2-D.8 & 5.2-B.6 El 23500/ Manual
ABC hand extinguishers	5.2-D.8 & 5.2-B.6 El 23500/ Manual

(8) Fire Protection Design Criteria Employed:

(a) Fire detection and suppression capability is provided and accessible.

(b) Fire stops are provided for cable tray and piping penetration through rated fire barriers.

(9) Consequences of Fire—The postulated fire assumes the loss of the function.

Smoke from a fire will be removed by the normal HVAC System operating in its smoke removal mode.

(10) Consequences of Fire Suppression—Suppression extinguishes the fire. Refer to Section 3.4 “Water Level (Flood) Design”, for the drain system.

(11) Design Criteria Used for Protection Against Inadvertent Operation, Careless Operation or Rupture of the Suppression System:

(a) Location of the manual hose suppression system external to the room

(b) Provision of raised supports for the equipment

(c) Refer to Section 3.4 “Water Level (Flood) Design”, for the drain system.

(d) ANSI B31.1 standpipe (rupture unlikely)

(12) Fire Containment or Inhibiting Methods Employed:

(a) The functions are located in a separate fire-resistive enclosure.

(b) The means of fire detection, suppression and alarming are provided and accessible.

(13) Remarks—None

9A.4.1.6.45 Room No. 658

(1) Fire Area—F4301

(2) Equipment: See Table 9A.6-2

Safety-Related	Provides Core Cooling
No	No

(3) Radioactive Material Present: None

(4) Qualification of Fire Barriers—Three walls, the ceiling, floor and door are internal to fire area F4301 and therefore are not fire rated. A fourth wall is common to room 659 and is of 3 h fire-resistive concrete construction. Access to room 658 is via a stairway from room 616 on the floor below.

(5) Combustibles Present:

Fire Loading	Total Heat of Combustion (MJ)
Cable Tray	727 MJ/m^2 NCLL (727 MJ/m^2 maximum average) applies

(6) Detection Provided—Class A supervised POC detection system in the room and alarm pull station at 5.2-D.8 and 5.2-B.6, El 23500.

(7) Suppression Available:

Type	Location/Actuation
Standpipe and hose reel	5.2-D.8 & 5.2-B.6 El 23500/ Manual
ABC hand extinguishers	5.2-D.8 & 5.2-B.6 El 23500/ Manual

(8) Fire Protection Design Criteria Employed:

Fire detection and suppression capability is provided and accessible.

(9) Consequences of Fire—The postulated fire assumes the loss of the function.

Smoke from a fire will be removed by the normal HVAC System operating in its smoke removal mode.

(10) Consequences of Fire Suppression—Suppression extinguishes the fire. Refer to Section 3.4 “Water Level (Flood) Design”, for the drain system.

(11) Design Criteria Used for Protection Against Inadvertent Operation, Careless Operation or Rupture of the Suppression System:

(a) Location of the manual hose suppression system external to the room

(b) Provision of raised supports for the equipment

(c) Refer to Section 3.4 “Water Level (Flood) Design”, for the drain system.

(d) ANSI B31.1 standpipe (rupture unlikely)

(12) Fire Containment or Inhibiting Methods Employed:

(a) The functions are located in a separate fire-resistive enclosure.

(b) The means of fire detection, suppression and alarming are provided and accessible.

(13) Remarks—None.

9A.4.1.6.46 Containment Atmospheric Monitoring System (CAMS) Rack A (Rm No. 659)

(1) Fire Area—F6100

(2) Equipment: See Table 9A.6-2

Safety-Related	Provides Core Cooling
Yes, D1	No

(3) Radioactive Material Present

(4) Qualification of Fire Barriers—All four walls, the ceiling, floor and door are of 3 h fire-resistive concrete construction. Access to room 659 is through room 658 through a 3 h fire rated door.

(5) Combustibles Present:

Fire Loading	Total Heat of Combustion (MJ)
Cable Tray	727 MJ/m^2 NCLL (727 MJ/m2 maximum average) applies.

(6) Detection Provided—Class A supervised POC detection system in the room and alarm pull station at 5.2-D.8 and 5.2-B.6, El 23500 mm.

(7) Suppression Available:

Type	Location/Actuation
Standpipe and hose reel	5.2-D.8 & 5.2-B.6 El 23500/ Manual
ABC hand extinguishers	5.2-D.8 & 5.2-B.6 El 23500/ Manual

(8) Fire Protection Design Criteria Employed:

(a) The function is located in a separate fire-resistive enclosure.

(b) Fire detection and suppression capability is provided and accessible.

(c) Fire stops are provided for cable tray and piping penetration through rated fire barriers.

(9) Consequences of Fire—The postulated fire assumes the loss of the function.

Smoke from a fire will be removed by the normal HVAC System operating in its smoke removal mode.

(10) Consequences of Fire Suppression—Suppression extinguishes the fire. Refer to Section 3.4 “Water Level (Flood) Design”, for the drain system.

(11) Design Criteria Used for Protection Against Inadvertent Operation, Careless Operation or Rupture of the Suppression System:

(a) Location of the manual hose suppression system external to the room

(b) Provision of raised supports for the equipment

(c) Refer to Section 3.4 “Water Level (Flood) Design”, for the drain system.

(d) ANSI B31.1 standpipe (rupture unlikely)

(12) Fire Containment or Inhibiting Methods Employed:

(a) The functions are located in a separate fire-resistive enclosure.

(b) The means of fire detection, suppression and alarming are provided and accessible.

(13) Remarks—None.

9A.4.1.6.47 Electrical Room (Rm No. 680)

(1) Fire Area—F6400

(2) Equipment: See Table 9A.6-2

Safety-Related	Provides Core Cooling
No	No

(3) Radioactive Material Present—None.

(4) Qualifications of Fire Barriers—The walls in common with the FMCRD room (Rm 681), the SGTS A filter train room (Rm 642), corridor B room (Rm 643), both exterior walls and the ceiling are of 3 h fire-resistive concrete construction. The floor is common to room 640 below and is not fire rated. Access to room 680 is provided from the FMCRD room via a 3 h fire-resistive door and directly from room 640 below via a stairwell.

(5) Combustibles Present:

Fire Loading	Total Heat of Combustion (MJ)
Cable Tray	727 MJ/m^2 NCLL (727 MJ/m^2 maximum average) applies.

(6) Detection Provided—Class A supervised POC in the room and manual alarm pull stations at 1.7-C.0 and 1.4-E.0.

(7) Suppression Available:

Type	Location/Actuation
Standpipe and hose reel	Col. 1.7-C.0 & 1.4-E.0/Manual
ABC hand extinguishers	Col. 1.7-C.0 & 1.4-E.0/Manual

(8) Fire Protection Design Criteria Employed:

(a) The function is located in a room separate from the rooms which contain safety-related equipment.

(b) Fire detection and suppression capability is provided and accessible.

(c) Fire stops are provided for cable tray and piping penetrations through rated fire barriers.

(9) Consequences of Fire—The postulated fire assumes the loss of the function.

Smoke from a fire will be removed by the EHVAC(B) system operating in its smoke removal mode.

(10) Consequences of Fire Suppression—Suppression extinguishes the fire. Refer to Section 3.4 “Water Level (Flood) Design”, for the drain system.

(11) Design Criteria Used for Protection Against Inadvertent Operation, Careless Operation or Rupture of the Suppression System:

(a) Location of the manual suppression system external to this non safety-related room

(b) Refer to Section 3.4 “Water Level (Flood) Design”, for the drain system.

(c) ANSI B31.1 standpipe (rupture unlikely)

(12) Fire Containment or Inhibiting Methods Employed:

(a) The functions are located in a separate fire-resistive enclosure.

(b) The means of fire detection, suppression and alarming are provided and accessible.

(13) Remarks—None.

9A.4.1.6.48 Not Used

9A.4.1.6.49 Containment Atmospheric Monitoring System (CAMS) Rack B (Rm No 621)

(1) Fire Area—F4201

(2) Equipment: See Table 9A.6-2

Safety-Related	Provides Core Cooling
Yes, D2	No

(3) Radioactive Material Present—None.

(4) Qualifications of Fire Barriers—The exterior wall and the wall common with the elevator serve as fire barriers and are of 3 h fire-resistive concrete construction. The remaining walls, ceiling and the floor are internal to fire area F4201 and therefore are not fire rated. Access to room 641 is provided through a non fire rated door from corridor B (Rm 622).

(5) Combustibles Present:

Fire Loading	Total Heat of Combustion (MJ)
Cable in conduit	727 MJ/m^2 NCLL (727 MJ/m^2 maximum average) applies.
Pre-filters	

(6) Detection Provided—Class A supervised POC in the room and manual alarm pull station at Col. 2.7-C.0 and 2.8-F.1.

(7) Suppression Available:

Type	Location/Actuation
Standpipe and hose reel	Col. 2.7-C.0 and 2.8-F.1/Manual
ABC hand extinguishers	Col. 2.7-C.0 and 2.8-F.1/Manual

(8) Fire Protection Design Criteria Employed:

(a) The function is located in a separate fire-resistive enclosure.

(b) Fire detection and suppression capability is provided and accessible.

(c) Fire stops are provided for cable tray and piping penetration through rated fire barriers.

(9) Consequences of Fire—The postulated fire assumes loss of function. The complete loss of the CAM Monitoring Rack B as a consequence of a single fire is acceptable. Functional backup is provided by CAM Monitoring Rack A Div. I (Rm 659).

Smoke from a fire will be removed by the normal HVAC System operating in its smoke removal mode.

(10) Consequences of Fire Suppression—Suppression extinguishes the fire. Refer to Section 3.4 “Water Level (Flood) Design”, for the drain system.

(11) Design Criteria Used for Protection Against Inadvertent Operation, Careless Operation or Rupture of the Suppression System:

(a) location of the manual suppression system in the corridor, external to the rooms containing the main safety-related equipment

(b) provision of raised supports for the equipment

(c) Refer to Section 3.4 “Water Level (Flood) Design”, for the drain system.

(d) ANSI B31.1 standpipe (rupture unlikely)

(12) Fire Containment or Inhibiting Methods Employed:

(a) The functions are located in a separate fire-resistive enclosure.

(b) The means of fire detection, suppression and alarming are provided and accessible.

(13) Remarks—None.

9A.4.1.6.50 Not Used

9A.4.1.7 Building—Reactor Building El 31700 mm

9A.4.1.7.1 Reactor Building Operating Deck (Rm No. 716)

(Rm 716 includes rooms 721, 733, 734 and 742 on the 31700 mm level)

(1) Fire Area—F4301

(2) Equipment: See Table 9A.2-6

Safety-Related	Provides Core Cooling
Yes, D1,D2	D3,& D4

(3) Radioactive Material Present—None that can be released as a result of fire. Spent fuel will be stored in the spent fuel storage pool at times. Since the fuel is under water and a fire would not result in draining the pool, a fire would not cause a release of radioactive material. Also during refueling, any radiation release from the Reactor head, Drywell head, Reactor well, or Refueling pool exposed concrete surface is contained within the secondary containment.

(4) Qualifications of Fire Barriers—The exterior walls, the roof, the walls common with the stairwell and elevator towers, the RIP A and B supply fan rooms (Rms 715 and 740 respectively), the RCW A surge tank room (Rm 710) and the D/G C exhaust fan room (Rm730) are of 3 h fire-resistive concrete construction. Access to the elevators and stairwell is through 3 h fire-resistive doors. The remaining internal walls do not serve as fire barriers as the rooms are internal to fire area F4301. Operating floor sections in quadrants 3 and 4 that are over fire areas F6201, F7200, F4201 and F4200 are of 3 h fire-resistive concrete construction.

(5) Combustibles Present:

Fire Loading	Total Heat of Combustion (MJ)
None	727 MJ/m^2 NCLL (727 MJ/m^2 maximum average) applies

(6) Detection Provided—Class A supervised POC in the HVAC Systems and manual alarm pull stations at Col. 2.0-A.3, 1.8-D.2, 5.8-B.0, 6.0-E.1 and 2.0-E.9.

(7) Suppression Available:

Type	Location/Actuation
Standpipe and hose reel	Col. 2.0-A.3 & 1.8-D.2, 5.8-B.0, 6.0-E.1 & 2.0-E.9/Manual
ABC hand extinguishers	Col. 2.0-A.4 & 1.8-D.2, 5.8-B.0, 6.0-E.1 & 2.0-E.9/Manual

(8) Fire Protection Design Criteria Employed:

(a) Fire detection and suppression capability is provided and accessible.

(b) Fire stops are provided for cable tray and piping penetrations through rated fire barriers.

(9) Consequences of Fire—The postulated fire assumes loss of the function in the fire affected zone. There are radiation monitors located in the area. See Subsection 9A.4.5.5.13 for further discussion of the consequences of fire to these systems.

Smoke from a fire will be removed by the normal HVAC System operating in its smoke removal mode.

(10) Consequences of Fire Suppression—Suppression extinguishes the fire. Refer to Section 3.4 “Water Level (Flood) Design”, for the drain system.

(11) Design Criteria Used for Protection Against Inadvertent Operation, Careless Operation or Rupture of the Suppression System:

(a) Location of the manual suppression system at the perimeter of the area

(b) Provision of raised supports for the equipment

(c) Refer to Section 3.4 “Water Level (Flood) Design”, for the drain system.

(d) ANSI B31.1 standpipe (rupture unlikely)

(12) Fire Containment or Inhibiting Methods Employed:

(a) The means of fire detection, suppression and alarming are provided and accessible.

(13) Remarks—The area contains electrical cables in conduit. Cable insulation in conduit is discussed in Subsection 9A.3.4.

The control of the permanent and transitory combustible loads introduced through normal and maintenance operations is the responsibility of the applicant.

9A.4.1.7.2 RIP (A) Supply Fan and RCW (C) Surge Tank (Rm No. 715)

(1) Fire Area—F3300

(2) Equipment: See Table 9A.2-6

Safety-Related	Provides Core Cooling
Yes, D3	Yes, D3

(3) Radioactive Material Present—None.

(4) Qualifications of Fire Barriers—The walls common with the operating floor (Rm 716), the RCW A surge tank room (Rm 710), the D/G C exhaust fan room (Rm 730), the stairwell and elevator (Rms 316 and 317 respectively), and the ceiling are of 3 h fire-resistive concrete construction. The exterior wall is constructed of concrete but has ventilation openings to the outside and therefore is not fire rated. Sections of the floor common to fire areas F4100 and F4300 below (Rms 653 and 673 respectively) are also of 3 h fire-resistive concrete construction. The remainder of the floor is internal to fire area F3300 and is not fire rated.

Access to room 715 is provided by the stairwell and elevator through 3 h fire-resistive doors. Room 715 provides access to rooms 710 and 730 via 3 h fire-resistive doors.

(5) Combustibles Present:

Fire Loading	Total Heat of Combustion (MJ)
Cable Tray	727 MJ/m^2 NCLL (727 MJ/m^2 maximum average) applies

(6) Detection Provided—Class A supervised POC in the room and manual alarm pull station at Col. 6.6-C.0 and 6.3-E.9.

(7) Suppression Available:

Type	Location/Actuation
Standpipe and hose reel	Col. 6.6-C.0 & 6.3-E.9/Manual
ABC hand extinguishers	Col. 6.6-C.0 & 6.3-E.9/ Manual

(8) Fire Protection Design Criteria Employed:

(a) The function is located in a fire area which is separate from the fire areas containing equipment which provides alternate means of performing the safety or shutdown function.

(b) Fire detection and suppression capability is provided and accessible.

(c) Fire stops are provided for cable tray and piping penetrations through rated fire barriers.

(9) Consequences of Fire—The postulated fire assumes the loss of the function. The provisions for core cooling systems backup are defined in Subsection 9A.2.5.

Smoke from a fire will be removed by the EHVAC(C) system operating in its smoke removal mode.

(10) Consequences of Fire Suppression—Suppression extinguishes the fire. Refer to Section 3.4 “Water Level (Flood) Design”, for the drain system.

(11) Design Criteria Used for Protection Against Inadvertent Operation, Careless Operation or Rupture of the Suppression System:

(a) Provision of raised supports for the equipment

(b) Refer to Section 3.4 “Water Level (Flood) Design”, for the drain system.

(c) ANSI B31.1 standpipe (rupture unlikely)

(12) Fire Containment or Inhibiting Methods Employed:

(a) The functions are located in a separate fire-resistive enclosure.

(b) The means of fire detection, suppression and alarming are provided and accessible.

(13) Remarks—Fire area F3300 includes the stair and elevator towers from the 4800 mm elevation and extends to the top of the Reactor Building. In its entirety it forms a service area for personnel access and egress. The floor hatches may be opened at each floor as requires without increasing the fire hazard to the other areas of the building.

9A.4.1.7.3 Not Used

9A.4.1.7.4 DG (C) Exhaust Fan Room (Rm No. 730)

(1) Fire Area—F4302

(2) Equipment: See Table 9A.2-6

Safety-Related	Provides Core Cooling
Yes, D3	Yes, D3

(3) Radioactive Material Present—None

(4) Qualifications of Fire Barriers—The walls common with the operating floor (Rm 716), the RIP A supply fan room (Rm 715) and the ceiling are of 3 h fire-resistive concrete construction. The floor is internal to Fire Area F4302 and therefore is not fire rated. The exterior walls are constructed of concrete but have ventilation openings to the outside and therefore are not fire rated. A 3 h fire-resistive door provides access from room 715.

(5) Combustibles Present:

Fire Loading	Total Heat of Combustion (MJ)
Cable Tray	727 MJ/m^2 NCLL (727 MJ/m^2 maximum average) applies

(6) Detection Provided—Class A supervised POC in the room and manual alarm pull station at Col. 6.3-E.9 and 6.6-C.0.

(7) Suppression Available:

Type	Location/Actuation
Standpipe and hose reel	Col. 6.3-E.9& 6.6-C.0/Manual
ABC hand extinguishers	Col. 6.3-E.9& 6.6-C.0/ Manual

(8) Fire Protection Design Criteria Employed:

(a) The function is located in a fire area which is separate from the fire areas containing equipment which provides alternate means of performing the safety or shutdown function.

(b) Fire detection and suppression capability is provided and accessible.

(c) Fire stops are provided for cable tray and piping penetrations through rated fire barriers.

(9) Consequences of Fire—The postulated fire assumes the loss of the function. The provisions for core cooling backup are defined in Subsection 9A.2.5.

Smoke from a fire will be removed by the EHVAC(C) system operating in its smoke removal mode.

(10) Consequences of Fire Suppression—Suppression extinguishes the fire. Refer to Section 3.4 “Water Level (Flood) Design”, for the drain system.

(11) Design Criteria Used for Protection Against Inadvertent Operation, Careless Operation or Rupture of the Suppression System:

(a) Location of the manual hose suppression system external to the room

(b) Provision of raised supports for the equipment

(c) Refer to Section 3.4 “Water Level (Flood) Design”, for the drain system.

(d) ANSI B31.1 standpipe (rupture unlikely)

(12) Fire Containment or Inhibiting Methods Employed:

(a) The functions are located in a separate fire-resistive enclosure.

(b) The means of fire detection, suppression and alarming are provided and accessible.

(13) Remarks—There is a large ventilation opening in the floor. The floor below is in the same fire area.

9A.4.1.7.5 Not Used

9A.4.1.7.6 RIP (B) Supply Fan and RCW (B) Surge Tank (Room No. 740)

(1) Fire Area—F7200

(2) Equipment: See Table 9A.2-6

Safety-Related	Provides Core Cooling
Yes, D2	Yes, D2

(3) Radioactive Material Present—None.

(4) Qualifications of Fire Barriers—The walls common with the operating floor (Rm 716), the elevator, stairwell, and ceiling are of 3 h fire-resistive concrete construction. A section of the floor common to room 680 below (fire area F6200) is of 3 h fire-resistive concrete construction. The remaining floor is not fire rated. Three hour rated fire-resistive doors open to the elevator and stairwell. The exterior walls are constructed of concrete but have ventilation openings to the outside andtherefore are not fire rated. Access to room 740 is provided by the elevator and stairwell. Also, there is access provided by the cross-building corridor extension of room 740. A door with a 3 h fire rating is provided in the cross-corridor at Col. 5.4.

(5) Combustibles Present:

Fire Loading	Total Heat of Combustion (MJ)
Cable Tray	727 MJ/m^2 NCLL (727 MJ/m^2 maximum average) applies

(6) Detection Provided—Class A supervised POC in the room and manual alarm pull station at Col. 1.8-A.3 and 1.4-D.6.

(7) Suppression Available:

Type	Location/Actuation
Standpipe and hose reel	Col. 1.8-A.3 & 1.4-D.6/Manual
ABC hand extinguishers	Col. 1.8-A.3 & 1.4-D.6/ Manual

(8) Fire Protection Design Criteria Employed:

(a) The function is located in a fire area which is separate from the fire areas containing equipment which provided alternate means of performing the safety or shutdown function.

(b) Fire detection and suppression capability is provided and accessible.

(c) Fire stops are provided for cable tray and piping penetrations through rated fire barriers.

(9) Consequences of Fire—The postulated fire assumes the loss of the function. The provisions for core cooling backup are defined in Subsection 9A.2.5.

Smoke from a fire will be removed by the EHVAC(B) system operating in its smoke removal mode.

(10) Consequences of Fire Suppression—Suppression extinguishes the fire. Refer to Section 3.4 “Water Level (Flood) Design”, for the drain system.

(11) Design Criteria Used for Protection Against Inadvertent Operation, Careless Operation or Rupture of the Suppression System:

(a) Provision of raised supports for the equipment

(b) Refer to Section 3.4 “Water Level (Flood) Design”, for the drain system.

(c) ANSI B31.1 standpipe (rupture unlikely)

(12) Fire Containment or Inhibiting Methods Employed:

(a) The functions are located in a separate fire-resistive enclosure.

(b) The means of fire detection, suppression and alarming are provided and accessible.

(13) Remarks—None.

9A.4.1.7.7 Access Service Area (Rm No. 764)

(1) Fire Area—F7200

(2) Equipment: See Table 9A.2-6

Safety-Related	Provides Core Cooling
No	No

(3) Radioactive Material Present—None.

(4) Qualifications of Fire Barriers—The wall in common with the operating floor (Rm 716), the mezzanine corridor (Rm 763), the elevator and stairwell and the ceiling are of 3 h fire-resistent concrete construction. The elevator door, stairwell door and door to room no. 763 are also of 3 h fire resistant

construction. The floor and the wall common to room 740 are not fire rated as they are internal to Fire Area F7200. Access is provided through 3 h fire rated doors from the stairwell, elevator and airlock (Rm 763).

(5) Combustibles Present—No significant quantities of exposed combustibles. 727 MJ/m^2 NCLL (727 MJ/m^2 maximum average) applies.

(6) Detection Provided—Class A supervised POC detection system and alarm pull station at Col. 1.3-E.0.

(7) Suppression Available:

Type	Location/Actuation
Standpipe and hose reel	Col. 1.3-E.0/Manual
ABC hand extinguishers	Col. 1.3-E.0/Manual

(8) Fire Protection Design Criteria Employed:

(a) The non-safety-related function is located in a separate fire-resistive enclosure.

(b) Fire detection and suppression capability is provided and accessible.

(9) Consequences of Fire—The postulated fire assumes loss of function of the room. The room does not contain equipment required for safe shutdown of the plant and the loss of function is acceptable.

Smoke from a fire will be removed by the EHVAC(C) system operating in its smoke removal mode.

(10) Consequences of Fire Suppression—Suppression extinguishes the fire. Refer to Section 3.4 “Water Level (Flood) Design”, for the drain system.

(11) Design Criteria Used for Protection Against Inadvertent Operation, Careless Operation or Rupture of the Suppression System:

(a) Location of the manual suppression system external to the room

(b) Refer to Section 3.4 “Water Level (Flood) Design”, for the drain system.

(c) ANSI B31.1 standpipe (rupture unlikely)

(12) Fire Containment or Inhibiting Methods Employed:

(a) The functions are located in a separate fire-resistive enclosure.

(b) The means of fire detection, suppression and alarming are provided and accessible.

(13) Remarks—None.

9A.4.1.7.8 Refueling Machine Control Room (Rm No. 760)

(1) Fire Area—F4301

(2) Equipment: See Table 9A.2-6

Safety-Related	Provides Core Cooling
No	No

(3) Radioactive Material Present—None.

(4) Qualifications of Fire Barriers—The interior walls and floor are not fire rated as they are within fire area F4301. The exterior walls, the wall common with elevator tower stairwell, and ceiling are of 3 h fire-resistive concrete construction. One wall common to the operating floor contains a viewing window.

Access to the room is provided via a non rated door from the mezzanine corridor (Rm 761).

(5) Combustibles Present:

Fire Loading	Total Heat of Combustion (MJ)
Cable Tray	727 MJ/m^2 NCLL (727 MJ/m^2 maximum average) applies

(6) Detection Provided—Class A supervised POC in the room and manual alarm pull station at Col. 1.2-E.1.

(7) Suppression Available:

Type	Location/Actuation
Standpipe and hose reel	Col. 1.2-E.1/Manual
ABC hand extinguishers	Col. 1.3-E.1 & 1.9-F.7/ Manual

(8) Fire Protection Design Criteria Employed:

(a) The function is located in a separate enclosure. The equipment is not safety-related.

(b) Fire detection and suppression capability is provided and accessible.

(9) Consequences of Fire—The postulated fire assumes the loss of the function. The function is not safety-related and loss of the function is acceptable.

Smoke from a fire will be removed by the normal HVAC System operating in its smoke removal mode.

(10) Consequences of Fire Suppression—Suppression extinguishes the fire. Refer to Section 3.4 “Water Level (Flood) Design”, for the drain system.

(11) Design Criteria Used for Protection Against Inadvertent Operation, Careless Operation or Rupture of the Suppression System:

(a) Location of the manual hose suppression system external to the room

(b) Refer to Section 3.4 “Water Level (Flood) Design”, for the drain system.

(c) ANSI B31.1 standpipe (rupture unlikely)

(12) Fire Containment or Inhibiting Methods Employed:

(a) The functions are located in a separate fire-resistive enclosure.

(b) The means of fire detection, suppression and alarming are provided and accessible.

(13) Remarks—None.

9A.4.1.7.9 Gallery (Rm No. 762)

(1) Fire Area—F4301

(2) Equipment: See Table 9A.2-6

Safety-Related	Provides Core Cooling
No	No

(3) Radioactive Material Present—None.

(4) Qualifications of Fire Barriers—The wall common with the operating floor (Rm 716) contains viewing windows. The walls and floor are not fire rated as they are within fire area F4301. The ceiling is of 3 h fire-resistive concrete construction. Access is provided via a non rated door from the mezzanine (Rm 761).

(5) Combustibles Present:

Fire Loading	Total Heat of Combustion (MJ)
Cable Tray	727 MJ/m^2 NCLL (727 MJ/m^2 maximum average) applies

(6) Detection Provided—Class A supervised POC in the room and manual alarm pull station at Col. 1.3-E.0 and 2.0-F.5.

(7) Suppression Available:

Type	Location/Actuation
Standpipe and hose reel	Col. 1.3-E.0 & 2.0-F.5/Manual
ABC hand extinguishers	Col. 1.3-E.0 & 2.0-F.5/ Manual

(8) Fire Protection Design Criteria Employed:

(a) The function is located in a separate enclosure.

(b) The equipment is not safety-related.

(c) Fire detection and suppression capability is provided and accessible.

(9) Consequences of Fire—The postulated fire assumes the loss of the function. The function is not safety-related and loss of the function is acceptable.

Smoke from a fire will be removed by the normal HVAC System operating in its smoke removal mode.

(10) Consequences of Fire Suppression—Suppression extinguishes the fire. Refer to Section 3.4 “Water Level (Flood) Design”, for the drain system.

(11) Design Criteria Used for Protection Against Inadvertent Operation, Careless Operation or Rupture of the Suppression System:

(a) Location of the manual hose suppression system external to the room

(b) Provision of raised supports for the equipment

(c) Refer to Section 3.4 “Water Level (Flood) Design”, for the drain system.

(d) ANSI B31.1 standpipe (rupture unlikely)

(12) Fire Containment or Inhibiting Methods Employed:

(a) The functions are located in a separate enclosure.

(b) The means of fire detection, suppression and alarming are provided and accessible.

(13) Remarks—None.

9A.4.1.7.10 Mezzanine Corridor (Rm No. 761)

(1) Fire Area—F4301

(2) Equipment: See Table 9A.2-6

Safety-Related	Provides Core Cooling
No	No

(3) Radioactive Material Present—None.

(4) Qualifications of Fire Barriers—The exterior walls and the wall common with the stairwell and the ceiling are of 3 h fire-resistive concrete construction. The interior wall and floor are internal to Fire Area F4301 and therefore are not fire rated. Non fire-rated doors provide access from the airlock room (Rm 763) and the refuel machine control room (Rm 760) and the control room for the refueling machine (Rm 760).

(5) Combustibles Present:

Fire Loading	Total Heat of Combustion (MJ)
None	727 MJ/m^2 NCLL (727 MJ/m^2 maximum average) applies

(6) Detection Provided—Class A supervised POC in the room and manual alarm pull station at Col. 1.3-E.0.

(7) Suppression Available:

Type	Location/Actuation
Standpipe and hose reel	Col. 1.3-E.0/Manual
ABC hand extinguishers	Col. 1.3-E.0 & 2.0-F.5/ Manual

(8) Fire Protection Design Criteria Employed:

(a) The function is located in a separate enclosure.

(b) Fire detection and suppression capability is provided and accessible.

(9) Consequences of Fire—The postulated fire assumes the loss of the function. The function is not safety-related and the loss of function is acceptable.

Smoke from a fire will be removed by the normal HVAC System operating in its smoke removal mode.

(10) Consequences of Fire Suppression—Suppression extinguishes the fire. Refer to Section 3.4 “Water Level (Flood) Design”, for the drain system.

(11) Design Criteria Used for Protection Against Inadvertent Operation, Careless Operation or Rupture of the Suppression System:

(a) Refer to Section 3.4 “Water Level (Flood) Design”, for the drain system.

(b) ANSI B31.1 standpipe (rupture unlikely)

(12) Fire Containment or Inhibiting Methods Employed:

(a) The means of fire detection, suppression and alarming are provided and accessible.

(b) The functions are located in a separate fire-resistive enclosure.

(13) Remarks—None.

9A.4.1.7.11 Roof A/C Area (Rm No. 810 and 830)

(1) Fire Area—F9300

(2) Equipment: See Table 9A.6-2

Safety-Related	Provides Core Cooling
Yes, D1, D3	No

(3) Radioactive Material Present—None.

(4) Qualifications of Fire Barriers—The roof at El 3800 mm and the reactor building wall above the roof are of 3 h fire-resistive concrete construction. The walls of the stair and elevator tower are of 3 h fire-resistive concrete construction. There is a 3 h fire-resistive door for access from the stairwell (Rm 316).

(5) Combustibles Present—No significant quantities of exposed combustibles. 727 MJ/m^2 NCLL (727 MJ/m^2 maximum average) applies.

(6) Detection Provided—Alarm pull station on the stair tower at Col. 6.8-C.5.

(7) Suppression Available:

Type	Location/Actuation
Standpipe and hose reel	6.8-C.5/Manual
ABC hand extinguishers	None

(8) Fire Protection Design Criteria Employed:

(a) The non-safety-related function is located in on the roof, away from any safety-related equipment.

(b) Fire suppression capability is provided and accessible.

(9) Consequences of Fire—The postulated fire assumes the loss of function of the diesel generator division 1 and 3 silencers. Loss of diesel generator division 1 and 3 silencers is acceptable, because the function can be replaced by the redundant portion of the system which is located in the different portion of the building.

(10) Consequences of Fire Suppression—Suppression extinguishes the fire. Refer to Section 3.4 “Water Level (Flood) Design”, for the drain system.

(11) Design Criteria Used for Protection Against Inadvertent Operation, Careless Operation or Rupture of the Suppression System:

(a) Location of the manual suppression system internal to the stair tower

(b) Refer to Section 3.4 “Water Level (Flood) Design”, for the drain system.

(c) ANSI B31.1 standpipe (rupture unlikely)

(12) Fire Containment or Inhibiting Methods Employed:

(a) The functions are located in a separate isolated area.

(b) The means of fire detection, suppression and alarming are provided and accessible.

(c) Provision of doorway curbs.

(13) Remarks—The hose reel is located inside of the stair tower to protect the hose reel from extremes in weather.

9A.4.1.7.12 Roof B/D Area (Rm No. 820 and 840)

(1) Fire Area—F9200

(2) Equipment: See Table 9A.6-2

Safety-Related	Provides Core Cooling
Yes, D2	No

(3) Radioactive Material Present—None.

(4) Qualifications of Fire Barriers—The roof at El 38200 mm and the reactor building wall above the roof are of 3 h fire-resistive concrete construction. The walls of the stair and elevator tower are of 3 h fire-resistive concrete construction. There is a 3 h fire-resistive door for access from the stairwell (Rm 329).

(5) Combustibles Present—No significant quantities of exposed combustibles. 727 MJ/m^2 NCLL (727 MJ/m^2 maximum average) applies.

(6) Detection Provided—Alarm pull station on the stair tower at Col. 1.3-D.5.

(7) Suppression Available:

Type	Location/Actuation
Standpipe and hose reel	1.3-D.5/Manual
ABC hand extinguishers	None

(8) Fire Protection Design Criteria Employed:

(a) The non-safety-related function is located in on the roof, away from any safety-related equipment.

(b) Fire suppression capability is provided and accessible.

(9) Consequences of Fire—The postulated fire assumes the loss of function of the stack radiation monitors at the base of the stack, and the diesel generator division 2 silencer. Loss of the stack radiation monitors is acceptable. Loss of diesel generator division 2 silencer is acceptable, because the function can be replaced by the redundant divisions of the system which are located in different locations of the building.

(10) Consequences of Fire Suppression—Suppression extinguishes the fire. Refer to Section 3.4 “Water Level (Flood) Design”, for the drain system.

(11) Design Criteria Used for Protection Against Inadvertent Operation, Careless Operation or Rupture of the Suppression System:

(a) Location of the manual suppression system internal to the stair tower

(b) Refer to Section 3.4 “Water Level (Flood) Design”, for the drain system.

(c) ANSI B31.1 standpipe (rupture unlikely)

(12) Fire Containment or Inhibiting Methods Employed:

(a) The functions are located in a separate isolated area.

(b) The means of fire detection, suppression and alarming are provided and accessible.

(13) Remarks—The hose reel is located inside the stair tower to protect it from extremes in weather.

9A.4.1.7.13 RCW (A) Surge Tank (Rm No. 710)

(1) Fire Area—F7100

(2) Equipment: See Table 9A.6-2

Safety-Related	Provides Core Cooling
Yes, D1	Yes, D1

(3) Radioactive Material Present—None.

(4) Qualifications of Fire Barriers—Both internal walls, one exterior wall, the floor and the ceiling are 3 h fire-resistive concrete construction. The remaining exterior wall has an opening for the normal HVAC input to the reactor secondary containment and therefore is not fire rated. Access to room 710 is provided from the RIP A supply fan and RCW C surge tank room (Rm 715). Access to the other side of the reactor building is provided by an interconnecting corridor from this room. A 3 h rated fire door is located in the corridor.

(5) Combustibles Present—No significant quantities of exposed combustibles. 727 MJ/m^2 NCLL (727 MJ/m^2 maximum average) applies.

(6) Detection Provided—Class A supervised POC detection system and alarm pull stations room at 6.6-C.0 and 6.3-E.9.

(7) Suppression Available:

Type	Location/Actuation
Standpipe and hose reel	Col. 6.6-C.0/Manual
ABC hand extinguishers	Col. 6.3-E.9 /Manual

(8) Fire Protection Design Criteria Employed:

(a) The function is located in a fire area which is separate from the fire areas containing equipment which provides alternate means of performing the safety or shutdown function.

(b) Fire detection and suppression capability is provided and accessible.

(c) Fire stops are provided for cable tray and piping penetrations through rated fire barriers.

(9) Consequences of Fire—The postulated fire assumes the loss of the function. The provisions for core cooling systems backup are defined in Subsection 9A.2.5.

Smoke from a fire will be removed by the normal HVAC System operating in its smoke removal mode.

(10) Consequences of Fire Suppression—Suppression extinguishes the fire. Refer to Section 3.4 "Water Level (Flood) Design", for the drain system.

(11) Design Criteria Used for Protection Against Inadvertent Operation, Careless Operation or Rupture of the Suppression System:

(a) Refer to Section 3.4 "Water Level (Flood) Design", for the drain system.

(b) ANSI B31.1 standpipe (rupture unlikely)

(12) Fire Containment or Inhibiting Methods Employed:

(a) The functions are located in a separate enclosure.

(b) The means of fire detection, suppression and alarming are provided and accessible.

(13) Remarks—None.

9A.4.1.7.14 Periodic Inspection Room (Rm No. 720)

(1) Fire Area—F4301

(2) Equipment: See Table 9A.6-2

Safety-Related	Provides Core Cooling
No	No

(3) Radioactive Material Present—None.

(4) Qualifications of Fire Barriers—The wall common to the elevator (Rm 293), the exterior walls and the floor is of 3 h fire-resistive concrete construction. The remaining walls and the ceiling are not rated as they are internal to fire area F4301. Access to this room is provided via non fire rated doors from the refuel machine control room (Rm 722) and the operating floor (Rm 716).

(5) Combustibles Present:

Fire Loading	Total Heat of Combustion (MJ)
Cable Tray	727 MJ/m^2 NCLL (727 MJ/m^2 maximum average) applies

(6) Detection Provided—Class A supervised POC in the room and manual alarm pull station at Col. 2.0-E.9.

(7) Suppression Available:

Type	Location/Actuation
Standpipe and hose reel	Col. 2.0-E.9/Manual
ABC hand extinguishers	Col. 2.0-E.9/Manual

(8) Fire Protection Design Criteria Employed:

(a) The equipment is not safety-related.

(b) Fire detection and suppression capability is provided and accessible.

(9) Consequences of Fire—The postulated fire assumes the loss of the function. Loss of the function which is not safety-related is acceptable.

Smoke from a fire will be removed by the normal HVAC System operating in its smoke removal mode.

(10) Consequences of Fire Suppression—Suppression extinguishes the fire. Refer to Section 3.4 “Water Level (Flood) Design”, for the drain system.

(11) Design Criteria Used for Protection Against Inadvertent Operation, Careless Operation or Rupture of the Suppression System:

(a) Location of the manual hose suppression system external to the room

(b) Refer to Section 3.4 “Water Level (Flood) Design”, for the drain system.

(c) ANSI B31.1 standpipe (rupture unlikely)

(12) Fire Containment or Inhibiting Methods Employed:

(a) The functions are located in a separate enclosure.

(b) The means of fire detection, suppression and alarming are provided and accessible.

(13) Remarks—None.

9A.4.1.7.15 RIP Repair Room (Rm No. 723)

(1) Fire Area—F4301

(2) Equipment: See Table 9A.6-2

Safety-Related	Provides Core Cooling
No	No

(3) Radioactive Material Present—None

(4) Qualifications of Fire Barriers—The exterior wall, the floor, and the wall common with the stairwell (Rm 329) and room 740 are of 3 h fire-resistive concrete construction. The ceiling and remaining internal walls are common to fire area F4301 and therefore are not fire rated. A 3 h fire-resistive door provides access from the operating floor.

(5) Combustibles Present:

Fire Loading	Total Heat of Combustion (MJ)
None	727 MJ/m^2 NCLL (727 MJ/m^2 maximum average) applies

(6) Detection Provided—Class A supervised POC in the room and manual alarm pull station at Col. 2.0-E.9.

(7) Suppression Available:

Type	Location/Actuation
Standpipe and hose reel	Col. 2.0-E.9/Manual
ABC hand extinguishers	Col. 2.0-E.9/Manual

(8) Fire Protection Design Criteria Employed:

(a) The function is located in a separate enclosure.

(b) Fire detection and suppression capability is provided and accessible.

(9) Consequences of Fire—The postulated fire assumes the loss of the function. Loss of the function which is not safety-related is acceptable.

Smoke from a fire will be removed by the normal HVAC System operating in its smoke removal mode.

(10) Consequences of Fire Suppression—Suppression extinguishes the fire. Refer to Section 3.4 “Water Level (Flood) Design”, for the drain system.

(11) Design Criteria Used for Protection Against Inadvertent Operation, Careless Operation or Rupture of the Suppression System:

(a) Refer to Section 3.4 “Water Level (Flood) Design”, for the drain system.

(b) ANSI B31.1 standpipe (rupture unlikely)

(12) Fire Containment or Inhibiting Methods Employed

(a) The means of fire detection, suppression and alarming are provided and accessible.

(b) The functions are located in a separate fire-resistive enclosure.

(13) Remarks: None.

9A.4.1.7.16 Refuel Machine Control Room HVH (Rm No. 722)

(1) Fire Area—F4301

(2) Equipment: See Table 9A.2-6

Safety-Related	Provides Core Cooling
No	No

(3) Radioactive Material Present—None.

(4) Qualifications of Fire Barriers—The exterior wall, the floor (common to fire area F4200 below) and ceiling are of 3 h fire-resistive concrete construction. The interior walls are not fire rated. Access is provided from periodic inspection room (Rm 720).

(5) Combustibles Present:

Fire Loading	Total Heat of Combustion (MJ)
None	727 MJ/m^2 NCLL (727 MJ/m^2 maximum average) applies

(6) Detection Provided—Class A supervised POC in the room and manual alarm pull station at Col. 2.0-E.9.

(7) Suppression Available:

Type	Location/Actuation
Standpipe and hose reel	Col. 2.0-E.9/Manual
ABC hand extinguishers	Col. 2.0-E.9/Manual

(8) Fire Protection Design Criteria Employed:

(a) The function is located in a separate enclosure. The equipment is not safety-related.

(b) Fire detection and suppression capability is provided and accessible.

(9) Consequences of Fire—The postulated fire assumes the loss of the function. The function is not safety-related and loss of the function is acceptable.

Smoke from a fire will be removed by the normal HVAC System operating in its smoke removal mode.

(10) Consequences of Fire Suppression—Suppression extinguishes the fire. Refer to Section 3.4 “Water Level (Flood) Design”, for the drain system.

(11) Design Criteria Used for Protection Against Inadvertent Operation, Careless Operation or Rupture of the Suppression System:

(a) Location of manual hose suppression system external to the room

(b) Refer to Section 3.4 “Water Level (Flood) Design”, for the drain system.

(c) ANSI B31.1 standpipe (rupture unlikely)

(12) Fire Containment or Inhibiting Methods Employed:

(a) The means of fire detection, suppression and alarming are provided and accessible.

(b) The functions are located in a separate fire-resistive enclosure.

(13) Remarks—None

9A.4.1.7.17 Standby Gas Treatment System Pipe Space Room (Rm No. 741)

(1) Fire Area—F4301

(2) Equipment: See Table 9A.2-6

Safety-Related	Provides Core Cooling
Yes, N/A	No

(3) Radioactive Material Present—None.

(4) Qualifications of Fire Barriers—The wall common with RIP (B) supply fan room (Rm 740), the ceiling, and the floor are fire barriers of 3 h fire-resistive concrete construction. The remainder of the walls are not fire rated as they are internal to fire Area F4301. A non-rated door provides access from the operating deck Area (Rm 742).

(5) Combustibles Present:

Fire Loading	Total Heat of Combustion (MJ)
None	727 MJ/m^2 NCLL (727 MJ/m^2 maximum average) applies

(6) Detection Provided—Class A supervised POC in the room and manual alarm pull station at Col. 1.7-D.2.

(7) Suppression Available:

Type	Location/Actuation
Standpipe and hose reel	Col. 1.7-D.2/Manual
ABC hand extinguishers	Col. 1.7-D.2/Manual

(8) Fire Protection Design Criteria Employed:

(a) The function is located in a separate enclosure.

(b) Fire detection and suppression capability is provided and accessible.

(9) Consequences of Fire—The postulated fire assumes the loss of the function.

Smoke from a fire will be removed by the normal HVAC System operating in its smoke removal mode.

(10) Consequences of Fire Suppression—Suppression extinguishes the fire. Refer to Section 3.4 “Water Level (Flood) Design”, for the drain system.

(11) Design Criteria Used for Protection Against Inadvertent Operation, Careless Operation or Rupture of the Suppression System:

(a) Location of manual hose suppression system external to the room

(b) Provision of raised supports of the equipment

(c) Refer to Section 3.4 “Water Level (Flood) Design”, for the drain system.

(d) ANSI B31.1 standpipe (rupture unlikely)

(12) Fire Containment or Inhibiting Methods Employed:

(a) The means of fire detection, suppression and alarming are provided and accessible.

(b) The functions are located in a separate fire-resistive enclosure.

(13) Remarks—There are no divisional safety-related electrical equipment mounted in this room.

9A.4.1.7.18 HVAC Supply Duct Room (Rm No. 711)

(1) Fire Area—F4301

(2) Equipment: See Table 9A.2-6

Safety-Related	Provides Core Cooling
No	No

(3) Radioactive Material Present—None.

(4) Qualifications of Fire Barriers—All walls, the ceiling, and a section of the floor are of 3 h fire-resistive concrete construction. The remaining floor is a duct space used for the building HVAC. Access to room 711 is provided from the Surge Tank Room (Rm 710) under the HVAC duct, through a 3 h fire-resistive door.

(5) Combustibles Present:

Fire Loading	Total Heat of Combustion (MJ)
None	727 MJ/m^2 NCLL (727 MJ/m^2 maximum average) applies

(6) Detection Provided—Class A supervised POC in the room and manual alarm pull station at Col. 6.3-C.0, El 31700 mm.

(7) Suppression Available:

Type	Location/Actuation
Standpipe and hose reel	Col. 6.3-C.0, El 31700 mm/Manual
ABC hand extinguishers	Col. 6.3-C.0, El 31700 mm/Manual

(8) Fire Protection Design Criteria Employed:

(a) The function is located in a separate enclosure.

(b) Fire detection and suppression capability is provided and accessible.

(c) Fire stops are provided for cable tray and piping penetrations through rated fire barriers.

(9) Consequences of Fire—The postulated fire assumes the loss of the function. The function is not safety-related and the loss of function is acceptable.

Smoke from a fire will be removed by the normal HVAC System operating in its smoke removal mode.

(10) Consequences of Fire Suppression—Suppression extinguishes the fire. Refer to Section 3.4 “Water Level (Flood) Design”, for the drain system.

(11) Design Criteria Used for Protection Against Inadvertent Operation, Careless Operation or Rupture of the Suppression System:

(a) Refer to Section 3.4 “Water Level (Flood) Design”, for the drain system.

(b) ANSI B31.1 standpipe (rupture unlikely)

(c) Location of manual suppression system external to the room

(12) Fire Containment or Inhibiting Methods Employed:

(a) The means of fire detection, suppression and alarming are provided and accessible.

(b) The functions are located in a separate fire-resistive enclosure.

(13) Remarks—None.

9A.4.1.7.19 Elevator Equipment Room (Rm No. 811)

(1) Fire Area—F1520

(2) Equipment: See Table 9A.2-6

Safety-Related	Provides Core Cooling
No	No

(3) Radioactive Material Present—None.

(4) Qualifications of Fire Barriers—All walls, the ceiling, and a section of the floor are of 3 h fire-resistive concrete construction. The remaining floor is not fire rated as it is internal to fire area F1520. Access to room 811 is provided form the stair well room 195 through a 3 h fire-resistive door.

(5) Combustibles Present:

Fire Loading	Total Heat of Combustion (MJ)
None	

(6) Detection Provided—Class A supervised POC in the room and manual alarm pull station at Col. 5.8-B.0, El 31700.

(7) Suppression Available:

Type	Location/Actuation
Standpipe and hose reel	Col. 5.8-B.0, El 31700 mm/Manual
ABC hand extinguishers	Col. 5.8-B.0, El 31700 mm/Manual

(8) Fire Protection Design Criteria Employed:

(a) The function is located in a separate enclosure.

(b) Fire detection and suppression capability is provided and accessible.

(c) Fire stops are provided for cable tray and piping penetrations through rated fire barriers.

(9) Consequences of Fire—The postulated fire assumes the loss of the function. The function is not safety-related and the loss of function is acceptable.

Smoke from a fire will be removed by the normal HVAC System operating in its smoke removal mode.

(10) Consequences of Fire Suppression—Suppression extinguishes the fire. Refer to Section 3.4 “Water Level (Flood) Design”, for the drain system.

(11) Design Criteria Used for Protection Against Inadvertent Operation, Careless Operation or Rupture of the Suppression System:

(a) Refer to Section 3.4 “Water Level (Flood) Design”, for the drain system.

(b) ANSI B31.1 standpipe (rupture unlikely)

(c) Location of the manual suppression system external to the room

(12) Fire Containment or Inhibiting Methods Employed:

(a) The functions are located in a separate fire-resistive enclosure.

(b) The means of fire detection, suppression and alarming are provided and accessible.

(13) Remarks: None

9A.4.1.7.20 Elevator Equipment Room (Rm No. 821)

(1) Fire Area—F1540

(2) Equipment: See Table 9A.2-6

Safety-Related	Provides Core Cooling
No	No

(3) Radioactive Material Present—None.

(4) Qualifications of Fire Barriers—All walls, the ceiling, and a section of the floor are of 3 h fire-resistive concrete construction. The remaining floor is not fire rated as it is internal to fire area F1540. Access to room 821 is provided form the stair well room 193 through a 3 h fire-resistive door.

(5) Combustibles Present:

Fire Loading	Total Heat of Combustion (MJ)
None	727 MJ/m^2 NCLL (727 MJ/m^2 maximum average) applies

(6) Detection Provided—Class A supervised POC in the room and manual alarm pull station at Col. 5.8-B.0, El 31700.

(7) Suppression Available:

Type	Location/Actuation
Standpipe and hose reel	Col. 5.8-B.0, El 31700/Manual
ABC hand extinguishers	Col. 5.8-B.0, El 31700/Manual

(8) Fire Protection Design Criteria Employed:

(a) The function is located in a separate enclosure.

(b) Fire detection and suppression capability is provided and accessible.

(c) Fire stops are provided for cable tray and piping penetrations through rated fire barriers.

(9) Consequences of Fire—The postulated fire assumes the loss of the function. The function is not safety-related and the loss of function is acceptable.

Smoke from a fire will be removed by the normal HVAC System operating in its smoke removal mode.

(10) Consequences of Fire Suppression—Suppression extinguishes the fire. Refer to Section 3.4 “Water Level (Flood) Design”, for the drain system.

(11) Design Criteria Used for Protection Against Inadvertent Operation, Careless Operation or Rupture of the Suppression System:

(a) Refer to Section 3.4 “Water Level (Flood) Design”, for the drain system.

(b) ANSI B31.1 standpipe (rupture unlikely)

(c) Location of the manual suppression system external to the room

(12) Fire Containment or Inhibiting Methods Employed:

(a) The functions are located in a separate fire-resistive enclosure.

(b) The means of fire detection, suppression and alarming are provided and accessible.

(13) Remarks: None

9A.4.2 Control Building

9A.4.2.1 Floor One El –8200 mm and –2150 mm

9A.4.2.1.1 RCW "A" (Rm No. 111)

(Consists of Rm No. 111 on both the –8200 mm level and –2150 mm level and Rm Nos. 212 and 217 on the –2150 mm level). Note: The space around the RCW heat exchangers is open to both levels of the (Rm No. 111).

(1) Fire Area FC1110

(2) Equipment: See Table 9A.6-3

Safety-Related	Provides Core Cooling
Yes, D1	Yes, D1

(3) Radioactive Material Present:

None that can be released as a result of a fire.

(4) Qualification of Fire Barriers:

The walls in common with this fire area (FC1110) and adjacent fire areas FC1210 and FC1310 on the –8200 mm and –2150 mm level serve as fire barriers and are of three hour fire-resistive concrete construction. The building exterior wall of fire area FC1110 on both levels is also of three hour fire-resistive concrete construction. The remaining room wall on both levels is not a fire barrier as it is internal to fire area FC1110 and is used to separate the access passageways (Rm Nos. 112 and 211) from the RCW heat exchanger and pump area. Passage between Rm Nos. 111 and 211 is via Rm No. 217 and passage between Rm Nos. 111 and 112 is through a non-rated personnel door located in the large equipment access doorway (used for installation and removal of the RCW heat exchanger). The ceiling (El. 3450 mm) of Rm No. 111 on the –2150 mm level is not a fire barrier because the area above (Rm Nos. 311, 312, 313, and 314 are part of fire area FC1110. Piping from service water (SW)"A" enters Rm No. 111 on the second level. Three hour, fire-resistive penetration barriers are provided where the SW piping enters Rm

No. 111. The floor of Rm No. 111 (El. –8200 mm) is the base mat of the building. The portion of the floor of Rm No. 111 that extends over room 131 on the –2150 mm elevation is of three hour fire-resistive concrete construction. The floor and walls of the division 3, Service Water "C" pipe chase are of three hour fire-resistive concrete construction where they pass through Rm No. 111.

(5) Combustibles Present: (NCLL applies)

Type	Fire Loading Total Heat of Combustion (MJ)
Cable in trays, small amount of pump motor lubricants	

(6) Detection Provided:

Class A supervised POC detection system in the room and manual pull alarm stations at 4.05-J.05 on the –8200 level and –2150 level in Rm Nos. 211 respectively.

(7) Suppression Available:

Type	Location/Actuation
Standpipe and hose reel	4.00-J.05 on the –8200 mm level & –2150 mm level/Manual
ABC hand extinguishers	4.05-J.05 on the –2150 mm level, 4.00-J.60 on the –8200 mm level & 4,07-J.65 on the –150 mm level/Manual

(8) Fire Protection Design Criteria Employed:

(a) The function is located in a fire area which is separate from fire areas providing alternate means of performing the safety or shutdown function.

(b) Fire detection and suppression capability is provided and accessible.

(c) Fire stops are provided for cable tray and piping penetrations through rated fire barriers.

(9) Consequences of Fire: The postulated fire assumes the loss of the RCW "A" function and the consequential loss of division 1. RCW Systems "B" and "C" would not be affected, and provide an alternate means of safe shutdown.

Smoke control is by the normal HVAC System functioning in the smoke control mode. Refer to 9.5.1.1.6 for additional information.

(10) Consequences of Fire Suppression—Suppression extinguishes the fire. Refer to Section 3.4 "Water Level (Flood) Design", for the drain system.

(11) Design Criteria Used for Protection Against Inadvertent Operation, Careless Operation or Rupture of the Suppression System:

(a) Location of the manual suppression system in an area external to the room containing the safety-related equipment

(b) Provision of raised supports for the equipment

(c) Refer to Section 3.4 "Water Level (Flood) Design", for the drain system.

(d) ANSI B31.1 standpipe (rupture unlikely)

(12) Fire Containment or Inhibiting Methods Employed:

(a) The functions are located in a fire-resistive enclosure.

(b) The means of fire detection, suppression and alarming are provided and accessible.

(c) Fire stops are provided for cable tray and piping penetrations through rated fire barriers.

(13) Remarks: None.

9A.4.2.1.2 Passageway (Rm No. 112)

(1) Fire Area FC1110

(2) Equipment: See Table 9A.6-3

Safety-Related	Provides Core Cooling
No	No

(3) Radioactive Material Present —None.

(4) Qualification of Fire Barriers—One wall is internal to FC1110 and is not a designated fire barrier. The opposite wall is a building exterior wall of three hour fire-resistive concrete construction. The ceiling (El. –2150 mm) is not a designated fire barrier and the floor is the base mat of the building. Both ends of the passageway have three hour fire-resistive doors. Access to the room is by either of these doors.

(5) Combustibles Present: (NCLL Applies)

Type	Fire Loading Total Heat of Combustion (MJ)
Cable in trays	

(6) Detection Provided: Class A supervised POC detection system in the room and manual pull alarm station at 4.05-J.05.

(7) Suppression Available:

Type	Location/Actuation
Standpipe and hose reel	4.05-J.05/Manual
ABC hand extinguishers	4.05-J.05/Manual

(8) Fire Protection Design Criteria Employed:

(a) Fire detection and suppression capability is provided and accessible.

(b) Fire stops are provided for cable tray and piping penetrations through designated fire barriers.

(9) Consequences of Fire—The postulated fire assumes the loss of the RCW "A" function and the consequential loss of division 1, although that most likely would not be the case. RCW Systems "B" and "C" would not be affected, and provide an alternate means of safe shutdown.

Smoke control is by the normal HVAC System functioning in the smoke control mode. Refer to 9.5.1.1.6 for additional information.

(10) Consequences of Fire Suppression—Suppression extinguishes the fire. Refer to Section 3.4 "Water Level (Flood) Design", for the drain system.

(11) Design Criteria Used for Protection Against Inadvertent Operation, Careless Operation or Rupture of the Suppression System:

(a) Refer to Section 3.4 “Water Level (Flood) Design”, for the drain system.

(b) ANSI B31.1 standpipe (rupture unlikely)

(12) Fire Containment or Inhibiting Methods Employed:

(a) The functions are located in a separate fire-resistive enclosure.

(b) The means of fire detection, suppression and alarming are provided and accessible.

(c) Fire stops are provided for cable tray and piping penetrations through rated fire barriers.

(13) Remarks: None.

9A.4.2.1.3 RCW “B” (Rm No. 121)

(Consists of Rm No. 121 on both the –8200 level and –2150 level and Rm Nos. 224 and 227 on the –2150 level). Note: The space around the RCW heat exchangers is open to Rm No. 121 on both levels.

(1) Fire Area FC1210

(2) Equipment: See Table 9A.6-3

Safety-Related	Provides Core Cooling
Yes, D2	Yes, D2

(3) Radioactive Material Present:

None that can be released as a result of a fire.

(4) Qualification of Fire Barriers:

The wall in common with adjacent fire area FC1110 on the –8200 mm and -2150 mm level is a designated fire barrier and is of three hour fire-resistive concrete construction. The building exterior wall of Rm No. 121 on both levels is also a fire barrier and is of three hour fire-resistive concrete construction. The remaining walls on both levels are not fire barriers because they are internal to fire area FC1210 and are used to separate the access passageways (Rm Nos. 122 and 221) from the RCW “B” heat exchanger and pump area. Piping for Service Water “B” enters Rm No. 121 on the second level. Three hour fire-resistive barriers are provided where the SW piping enters Rm No. 121. Passage between Rm Nos. 121 and 221 is via Rm No. 227

and passage between Rm Nos. 121 and 122 is through a non-rated personnel door located in the large equipment access doorway. A section of the ceiling (level 3450 mm) of Rm No. 121 is common to the Division 4 electrical equipment area (Rm Nos. 341, 342 and 343 in fire area FC3410) and is therefore designated as a fire barrier and is of three hour fire-resistive concrete construction. The remainder of the ceiling is internal to fire area FC1210 and is not a fire barrier. The floor of Rm No.121 is the base mat of the building. The divisions 1 and 3 pipe tunnels pass through the upper elevation of this room. They are of three hour fire-resistive concrete construction.

(5) Combustibles Present: (NCLL Applies)

Type	Fire Loading Total Heat of Combustion (MJ)
Cable in trays pump motor lubricants	727 MJ/m^2 NCLL (727 MJ/m^2 maximum average) applies

(6) Detection Provided:

Class A supervised POC detection system in the room and manual pull alarm stations at 1.41-J.60 on the –8200 mm level and –2150 mm level in Rm Nos. 122 and 221 (also in fire area 1210) which serve as equipment access and passageways to Rm No. 121.

(7) Suppression Available:

Type	Location/Actuation
Standpipe and hose reel	1.41-J.53 on the –8200 mm level and –2150 mm level/Manual
ABC hand extinguishers	1.41-J.60 on the –8200 mm level and –2150 mm level 2.07-J.60 on the –8200 mm level. 2.12-J.65 on the –2150 mm level/Manual

(8) Fire Protection Design Criteria Employed:

(a) The function is located in a fire area which is separate from fire areas providing alternate means of performing the safety or shutdown function.

(b) Fire detection and suppression capability is provided and accessible.

(c) Fire stops are provided for cable tray and piping penetrations through designated fire barriers.

(9) Consequences of Fire—The postulated fire assumes the loss of the RCW "B" function and the consequential loss of division 2. RCW Systems "A" and "C" would not be affected, and provide an alternate means of safe shutdown.

Smoke control is by the normal HVAC System functioning in the smoke control mode. Refer to 9.5.1.1.6 for additional information.

(10) Consequences of Fire Suppression—Suppression extinguishes the fire. Refer to Section 3.4, "Water Level (Flood) Design," for the drain system.

(11) Design Criteria Used for Protection Against Inadvertent Operation, Careless Operation or Rupture of the Suppression System:

(a) Location of the manual suppression system in an area external to the room containing the safety-related equipment

(b) Provision of raised supports for the equipment

(c) Refer to Section 3.4, "Water Level (Flood) Design," for the drain system.

(d) ANSI B31.1 standpipe (rupture unlikely)

(12) Fire Containment or Inhibiting Methods Employed:

(a) The functions are located in a separate fire-resistive enclosure.

(b) The means of fire detection, suppression and alarming are provided and accessible.

(c) Fire stops are provided for cable tray and piping penetrations through rated fire barriers.

(13) Remarks: None.

9A.4.2.1.4 Passageway (Rm No. 122)

(1) Fire Area FC1210

(2) Equipment: See Table 9A.6-3

Safety-Related	Provides Core Cooling
No	No

(3) Radioactive Material Present: None.

(4) Qualification of Fire Barriers:

Rm No. 122 is an "L" shaped passageway. The three building exterior walls are designated as fire barriers and are of three hour fire-resistive concrete construction. The two internal walls are common to fire area FC1210 (Rm No. 121) and are not fire barrier walls. A three hour fire-resistive door is provided between Rm Nos. 122 and 112 (FC1210 and 1110) at one end of the passageway. At the other end of the passageway, Rm No. 122 connects to a stairwell going up to the same fire area on elevation –2150 mm. An alternate access and egress route, from anyplace on the –8200 mm level, is provided by a stairwell leading up from Rm No. 132. The floor is the base mat of the building.

(5) Combustibles Present: (NCLL Applies)

Type	Fire Loading Total Heat of Combustion (MJ)
Cable in trays pump motor lubricants	727 MJ/m^2 NCLL (727 MJ/m^2 maximum average) applies

(6) Detection Provided:

Class A supervised POC in the room and manual pull alarm station at 1.41-J.60.

(7) Suppression Available:

Type	Location/Actuation
Standpipe and hose reel	1.41-J.53/Manual
ABC hand extinguishers	1.41-J.60/Manual

(8) Fire Protection Design Criteria Employed:

(a) Fire detection and suppression capability is provided and accessible.

(b) Fire stops are provided for cable tray and piping penetrations through designated fire barriers.

(9) Consequences of Fire:

The postulated fire assumes the loss of the RCW “B” function and the consequential loss of division 2, although that most likely would not be the case. RCW Systems “A” and “C” would not be affected, and provide an alternate means of safe shutdown.

Smoke control is by the normal HVAC System functioning in the smoke control mode. Refer to 9.5.1.1.6 for additional information.

(10) Consequences of Fire Suppression—Suppression extinguishes the fire. Refer to Section 3.4, "Water Level (Flood) Design," for the drain system.

(11) Design Criteria Used for Protection Against Inadvertent Operation, Careless Operation or Rupture of the Suppression System:

(a) Refer to Section 3.4, "Water Level (Flood) Design," for the drain system.

(b) ANSI B31.1 standpipe (rupture unlikely)

(12) Fire Containment or Inhibiting Methods Employed:

(a) The functions are located in a separate fire-resistive enclosure.

(b) The means of fire detection, suppression and alarming are provided and accessible.

(c) Fire stops are provided for cable tray and piping penetrations through rated fire barriers.

(13) Remarks: None.

9A.4.2.1.5 RCW "C," (Rm No. 131)

(Consists of Rm No 131 on both the –8200 mm level and –2150 mm level, and Rm Nos. 232 and 237 on the –2150 level). Note: The space around the RCW heat exchangers is open to room 131 on both levels.

(1) Fire Area FC1310

(2) Equipment: See Table 9A.6-3

Safety-Related	Provides Core Cooling
Yes, D3	Yes, D3

(3) Radioactive Material Present:

None that can be released as a result of a fire.

(4) Qualification of Fire Barriers:

The wall in common with adjacent fire area 1110 on the –8200 mm and –2150 mm level is designated as a fire barrier and is of three hour fire-resistive concrete construction. The building exterior wall of fire area FC1310 (Rm No. 131) on both levels is designated as a fire barrier and is also of three hour fire-resistive concrete construction. The walls enclosing the division 1 HVAC chase at elevation –2150 mm are fire barriers and are of three hour fire-resistive concrete construction. The remaining walls on both levels are not designated fire barriers because they are internal to fire area FC1310 and are used to separate the access passageways (Rm Nos. 132 and 231) from the RCW heat exchanger and pump area. Piping from Service Water (SW) "C" enters Rm No. 131 on the second level. Three hour, fire-resistive barriers are provided where the SW piping enters the room. Passage between Rm No. 131 and Rm No. 231 is via Rm No. 237 and passage between Rm Nos. 131 and 132 is through a personnel door located in the large equipment access doorway. A section of the ceiling (level 3450 mm) of Rm No. 131 is common to the division 1 Electrical Equipment area (Rm Nos. 315, 316, 317, and 318) and is therefore designated as a fire barrier and is of three hour fire-resistive concrete construction. The remainder of the ceiling is internal to fire area FC1310 and is not a fire barrier. The floor of Rm No. 131 is the base mat of the building.

(5) Combustibles Present: (NCLL Applies)

Type	Fire Loading Total Heat of Combustion (MJ)
Cable in trays pump motor lubricants	727 MJ/m^2 NCLL (727 MJ/m^2 maximum average) applies

(6) Detection Provided:

Class A supervised POC detection system in the room and manual pull alarm stations at 6.55-J.60 on the –8200 mm level and –2150 mm level.

(7) Suppression Available:

Type	Location/Actuation
Standpipe and hose reel	6.55-J.53 on the –8200 mm level and –2150 mm level/Manual
ABC hand extinguishers	6.55-J.60 on the –8200 mm level and –2150 mm level 5.93-J.60 on the –8200 mm level and 5.85-J.63 on the –2150 mm level/Manual

(8) Fire Protection Design Criteria Employed:

(a) The function is located in a fire area which is separate from fire areas providing alternate means of performing the safety or shutdown functions.

(b) Fire detection and suppression capability is provided and accessible.

(c) Fire stops are provided for cable tray and piping penetrations through designated fire barriers.

(9) Consequences of Fire—The postulated fire assumes loss of the RCW “C” function and the consequential loss of division 3. RCW Systems “A” and “B” would not be affected and provide an alternate means of safe shutdown.

Smoke control is by the normal HVAC System functioning in the smoke control mode. Refer to 9.5.1.1.6 for additional information.

(10) Consequences of Fire Suppression—Suppression extinguishes the fire. Refer to Section 3.4, "Water Level (Flood) Design," for the drain system.

(11) Design Criteria Used for Protection Against Inadvertent Operation, Careless Operation or rupture of the Suppression System:

(a) Location of the manual suppression system in an area external to the room containing the safety-related equipment

(b) Provision of raised supports for the equipment

(c) Refer to Section 3.4, "Water Level (Flood) Design," for the drain system.

(d) ANSI B31.1 standpipe (rupture unlikely)

(12) Fire Containment or Inhibiting Methods Employed:

(a) The functions are located in a separate fire-resistive enclosure.

(b) The means of fire detection, suppression and alarming are provided and accessible.

(c) Fire stops are provided for cable tray and piping penetrations through rated fire barriers.

(13) Remarks: None.

9A.4.2.1.6 Passageway (Rm No. 132)

(1) Fire Area FC1310

(2) Equipment: See Table 9A.6-3

Safety-Related	Provides Core Cooling
No	No

(3) Radioactive Material Present—None.

(4) Qualification of Fire Barriers:

Rm No. 132 is an “L” shaped passageway. The two building exterior walls are designated as fire barriers and are of three hour fire-resistive concrete construction. The two internal walls are common to Rm No. 131, fire area FC1310 and are not designated fire barriers. A three hour fire-resistive door is provided between Rm Nos. 132 and 112 (FC1310 and 1110). The other end of the passageway connects to a stairwell going up to the same fire area on

elevation –2150 mm. An alternate access and egress route, that is accessible from anyplace on the –8200 mm level, is provided by a stairwell leading up from Rm No. 122. The floor of Rm No. 132 is the base mat of the building.

(5) Combustibles Present: (NCLL Applies)

Type	Fire Loading Total Heat of Combustion (MJ)
Cable in trays	727 MJ/m^2 NCLL (727 MJ/m^2 maximum average) applies

(6) Detection Provided:

Class A supervised POC detection system in the room and manual pull alarm station at 6.55-J.60.

(7) Suppression Available:

Type	Location/Actuation
Standpipe and hose reel	6.55-J.53/
ABC hand extinguishers	6.55-J.60/Manual

(8) Fire Protection Design Criteria Employed:

(a) Fire detection and suppression capability is provided and accessible.

(b) Fire stops are provided for cable tray and piping penetrations through designated fire barriers.

(9) Consequences of Fire—Postulated fire assumes the loss of the RCW “C” function and the consequential loss of division 3, although that most likely would not be the case. RCW Systems “A” and “B” would not be affected, and provide an alternate means of safe shutdown.

Smoke control is by the normal HVAC System functioning in the smoke control mode. Refer to 9.5.1.1.6 for additional information.

(10) Consequences of Fire Suppression—Suppression extinguishes the fire. Refer to Section 3.4, "Water Level (Flood) Design," for the drain system.

(11) Design Criteria Used for Protection Against Inadvertent Operation, Careless Operation or Rupture of the Suppression System:

(a) Refer to Section 3.4, "Water Level (Flood) Design," for the drain system.

(b) ANSI B31.1 standpipe (rupture unlikely)

(12) Fire Containment or Inhibiting Methods Employed:

(a) The functions are located in a separate fire-resistive enclosure.

(b) The means of fire detection, suppression and alarming are provided and accessible.

(c) Fire stops are provided for cable tray and piping penetrations through rated fire barriers.

(13) Remarks: None.

9A.4.2.2 Floor Two El –2150 mm

9A.4.2.2.1 Passageway (Rm No. 211)

(1) Fire Area FC1110

(2) Equipment: See Table 9A.6-3

Safety-Related	Provides Core Cooling
No	No

(3) Radioactive Material Present: None.

(4) Qualification of Fire Barriers:

One wall is internal to fire area FC1110 and is not a designated fire barrier. The opposite wall is a building exterior wall of three hour fire-resistive concrete construction. Both ends of the passageway have three hour fire-resistive doors. The floor and ceiling of Rm No. 211 is common to fire area FC1110 below and above and therefore are not fire barriers.

(5) Combustibles Present: (NCLL Applies)

Type	Fire Loading Total Heat of Combustion (MJ)
Cable in trays	727 MJ/m^2 NCLL (727 MJ/m^2 maximum average) applies

(6) Detection Provided:

Class A supervised POC detection system in the room and manual pull alarm station at 4.05-J.05.

(7) Suppression Available:

Type	Location/Actuation
Standpipe and hose reel	4.00-J.05/
ABC hand extinguishers	4.05-J.05/Manual

(8) Fire Protection Design Criteria Employed:

(a) The function is located in a separate fire-resistive enclosure.

(b) Fire detection and suppression capability is provided and accessible.

(c) Fire stops are provided for cable tray and piping penetrations through designated fire barriers.

(9) Consequences of Fire—Postulated fire assumes the loss of the RCW “A” function and the consequential loss of division 1, although that most likely would not be the case. RCW Systems “B” and “C” would not be affected, and provide an alternate means of safe shutdown.

Smoke control is by the normal HVAC System functioning in the smoke control mode. Refer to 9.5.1.1.6 for additional information.

(10) Consequences of Fire Suppression—Suppression extinguishes the fire. Refer to Section 3.4, "Water Level (Flood) Design," for the drain system.

(11) Design Criteria Used for Protection Against Inadvertent Operation, Careless Operation or Rupture of the Suppression System:

(a) Refer to Section 3.4, "Water Level (Flood) Design," for the drain system.

(b) ANSI B31.1 standpipe (rupture unlikely)

(12) Fire Containment or Inhibiting Methods Employed:

(a) The functions are located in a separate fire-resistive enclosure.

(b) The means of fire detection, suppression and alarming are provided and accessible.

(c) Fire stops are provided for cable tray and piping penetrations through rated fire barriers.

(13) Remarks: None.

9A.4.2.2.2 Passageway (Rm No. 221)

(1) Fire Area FC1210

(2) Equipment: See Table 9A.6-3

Safety-Related	Provides Core Cooling
No	No

(3) Radioactive Material Present: None.

(4) Qualification of Fire Barriers:

Rm No. 221 is an "L" shaped passageway. The two building exterior walls are designated as fire barriers and are of three hour fire-resistive concrete construction. The two internal walls are common to fire area FC1210 and are not fire barriers. A three hour rated fire door is provided between Rm Nos. 221 and 211 (FC1210 and FC1110). The other end of passageway, Rm No. 221 connects to a stairwell going down to the same fire area on elevation –8200 mm. An alternate means of access and egress, that is accessible from any place on the –2150 mm level, is provided by a stairwell leading up or down from Rm No. 231. The floor of Rm No. 221 is common to fire area FC1210 below and therefore is not a fire barrier.

(5) Combustibles Present: (NCLL Applies)

Type	Fire Loading Total Heat of Combustion (MJ)
Cable in trays	727 MJ/m^2 NCLL (727 MJ/m^2 maximum average) applies

(6) Detection Provided:

Class A supervised POC detection system in the room and manual pull alarm station at 1.41-J.60.

(7) Suppression Available:

Type	Location/Actuation
Standpipe and hose reel	1.41-J.53/
ABC hand extinguishers	1.41-J.53/Manual

(8) Fire Protection Design Criteria Employed:

(a) Fire detection and suppression capability is provided and accessible.

(b) Fire stops are provided for cable tray and piping penetrations through designated fire barriers.

(9) Consequences of Fire—Postulated fire assumes the loss of the RCW “B” function and the consequential loss of division 2, although that most likely would not be the case. RCW Systems “A” and “C” would not be affected, and provide an alternate means of safe shutdown.

Smoke control is by the normal HVAC System functioning in the smoke control mode. Refer to 9.5.1.1.6 for additional information.

(10) Consequences of Fire Suppression—Suppression extinguishes the fire. Refer to Section 3.4, "Water Level (Flood) Design," for the drain system.

(11) Design Criteria Used for Protection Against Inadvertent Operation, Careless Operation or Rupture of the Suppression System:

(a) Refer to Section 3.4, "Water Level (Flood) Design," for the drain system.

(b) ANSI B31.1 standpipe (rupture unlikely)

(12) Fire Containment or Inhibiting Methods Employed:

(a) The functions are located in a separate fire-resistive enclosure.

(b) The means of fire detection, suppression and alarming are provided and accessible.

(c) Fire stops are provided for cable tray and piping penetrations through rated fire barriers.

(13) Remarks: None.

9A.4.2.2.3 Passageway (Rm No.231)

(1) Fire Area FC1310

(2) Equipment: See Table 9A.6-3

Safety-Related	Provides Core Cooling
No	No

(3) Radioactive Material Present: None.

(4) Qualification of Fire Barriers:

Rm No. 231 is an "L" shaped passageway. The two building exterior walls are designated as fire barriers and are of three hour fire-resistive concrete construction. The two internal walls are common to fire area FC1310 and are not designated fire barriers. An access door is provided between Rm Nos. 231 and 131 via Rm No. 237. A three hour fire-resistive door is provided between Rm Nos. 231 and 211 (FC1310 and FC1110). The other end of passageway, Rm No. 231, connects to a stairwell leading up or down to rooms in the same fire area. An alternate access and egress route, that is accessible from any place on the –2150 mm level, is provided via a fire barrier door leading to the heat exchanger building from Rm No. 231. The floor of Rm No. 231 is common to fire area FC1310 below and therefore is not a fire barrier.

(5) Combustibles Present—(NCLL Applies)

Type	Fire Loading Total Heat of Combustion (MJ)
Cable in trays	727 MJ/m^2 NCLL (727 MJ/m^2 maximum average) applies

(6) Detection Provided—Class A supervised POC detection system in the room and manual pull alarm station at 6.55-J.60.

(7) Suppression Available:

Type	Location/Actuation
Standpipe and hose reel	6.55-J.53/Manual
ABC hand extinguishers	6.55-J.60/Manual

(8) Fire Protection Design Criteria Employed:

(a) Fire detection and suppression capability is provided and accessible.

(b) Fire stops are provided for cable tray and piping penetrations through designated fire barriers.

(9) Consequences of Fire—Postulated fire assumes the loss of the RCW "C" function and the consequential loss of division "C", although that most likely would not be the case. RCW Systems "A" and "B" would not be affected, and provide an alternate means of safe shutdown.

Smoke control is by the normal HVAC System functioning in the smoke control mode. Refer to 9.5.1.1.6 for additional information.

(10) Consequences of Fire Suppression—Suppression extinguishes the fire. Refer to Section 3.4, "Water Level (Flood) Design," for the drain system.

(11) Design Criteria Used for Protection Against Inadvertent Operation, Careless Operation or Rupture of the Suppression System:

(a) Refer to Section 3.4, "Water Level (Flood) Design," for the drain system.

(b) ANSI B31.1 standpipe (rupture unlikely)

(12) Fire Containment or Inhibiting Methods Employed:

(a) The functions are located in a separate fire-resistive enclosure.

(b) The means of fire detection, suppression and alarming are provided and accessible.

(c) Fire stops are provided for cable tray and piping penetrations through rated fire barriers.

(13) Remarks—None.

9A.4.2.3 Floor Three El 3500 mm

9A.4.2.3.1 250 VDC Battery Room (Rm No. 313)

(1) Fire Area—FC1110

(2) Equipment: See Table 9A.6-3

Safety-Related	Provides Core Cooling
No	No

(3) Radioactive Material Present—None.

(4) Qualification of Fire Barriers—All walls with exception of the walls, common to rooms 317 and 318 and the floor are internal to fire area FC1110 and therefore are not designated as fire barriers. The ceiling serves as a fire barrier between adjacent fire areas and is of three hour fire-resistive concrete construction. Access to Rm No. 313 is from Rm No. 312. The common walls between rooms 313, 317, and 318 are a 3 h fire barrier for the purpose of investment protection only.

(5) Combustibles Present—(ECLL Applies)

Type	Fire Loading Total Heat of Combustion (MJ)
Cable in trays. HVAC will maintain the hydrogen concentration below 2 vol-%.	1454 MJ/m^2 NCLL (1454 MJ/m^2 maximum average) applies

(6) Detection Provided—Class A supervised POC detection system in the room and manual pull alarm station at 4.05-J.05, Rm No. 312.

(7) Suppression Available:

Type	Location/Actuation
Standpipe and hose reel	4.00-J.05, and 4.00-K.95/Manual
ABC hand extinguishers	4.05-J.05 & 4.00-K.39/Manual

(8) Fire Protection Design Criteria Employed:

(a) The function is located in a fire area which is separate from fire areas providing alternate means of performing the safety or shutdown function.

(b) Fire detection and suppression capability is provided and accessible.

(c) Fire stops are provided for cable tray penetrations through designated fire barriers.

(9) Consequences of Fire—Postulated fire assumes loss of the functions. Non-divisional CVCF and possibly division 1 power would be lost as the area is served by the division 1 HVAC System. Power for divisions 2, 3, and 4 would remain available.

Smoke control is by the normal HVAC System functioning in the smoke control mode. Refer to 9.5.1.1.6 for additional information.

(10) Consequences of Fire Suppression—Suppression extinguishes the fire. Refer to Section 3.4, "Water Level (Flood) Design," for the drain system.

(11) Design Criteria Used for Protection Against Inadvertent Operation, Careless Operation or Rupture of the Suppression System:

(a) Location of manual suppression system in a room external to the room containing the batteries and cable

(b) Provision of raised supports for the batteries

(c) ANSI B31.1 standpipe (rupture unlikely)

(d) Refer to Section 3.4, "Water Level (Flood) Design," for the drain system.

(12) Fire Containment or Inhibiting Methods Employed:

(a) The functions are located in a separate fire-resistive enclosure.

(b) The means of fire detection, suppression and alarming are provided and accessible.

(c) Fire stops are provided for cable tray and piping penetrations through rated fire barriers.

(13) Remarks—None.

9A.4.2.3.2 Passageway (Rm No. 312)

(1) Fire Area—FC1110

(2) Equipment: See Table 9A.6-3

Safety-Related	Provides Core Cooling
No	No

(3) Radioactive Material Present—None.

(4) Qualification of Fire Barriers—One wall is internal to fire area FC1110 and is not a designated fire barrier. The opposite wall is a building exterior wall of three hour fire-resistive concrete construction. Both ends of the passageway have three hour fire-resistive doors. The ceiling serves as a fire barrier between

adjacent fire areas and is of three hour fire-resistive concrete construction. The floor of Rm No. 312 is common to fire area FC1110 below and is not a fire barrier.

(5) Combustibles Present—(NCLL Applies)

Type	Fire Loading Total Heat of Combustion (MJ)
Cable in trays	727 MJ/m^2 NCLL (727 MJ/m^2 maximum average) applies

(6) Detection Provided—Class A Supervised POC detection system in the room and manual pull alarm stations at 4.05-J.05.

(7) Suppression Available:

Type	Location/Actuation
Standpipe and hose reel	4.00-J.05/Manual
ABC hand extinguishers	4.05-J.05/Manual

(8) Fire Protection Design Criteria Employed:

(a) Fire detection and suppression capability is provided and accessible.

(b) Fire stops are provided for cable tray and piping penetrations through designated fire barriers.

(9) Consequences of Fire—Postulated fire assumes loss of the functions. Non-divisional CVCF and division 1 power would possibly be lost, however, power for divisions 2, 3 and 4 would remain available. Smoke control is by the normal HVAC System functioning in the smoke control mode. Refer to 9.5.1.1.6 for additional information.

(10) Consequences of Fire Suppression—Suppression extinguishes the fire. Refer to Section 3.4, "Water Level (Flood) Design," for the drain system.

(11) Design Criteria Used for Protection Against Inadvertent Operation, Careless Operation or Rupture of the Suppression System.

(a) Refer to Section 3.4, "Water Level (Flood) Design," for the drain system.

(b) ANSI B31.1 standpipe (rupture unlikely)

(c) Location of the manual suppression system internal to the room

(12) Fire Containment or Inhibiting Methods Employed:

(a) The functions are located in a separate fire-resistive enclosure.

(b) The means of fire detection, suppression and alarming are provided and accessible.

(c) Fire stops are provided for cable tray and piping penetrations through rated fire barriers.

(13) Remarks—None.

9A.4.2.3.3 Non-Divisional Electrical Equipment Room (Rm No. 311)

(1) Fire Area—FC1110

(2) Equipment: See Table 9A.6-3

Safety-Related	Provides Core Cooling
No	No

(3) Radioactive Material Present—None.

(4) Qualification of Fire Barriers—The wall in common with the adjacent fire area FC3410 is designated as a fire barrier and is of three hour fire-resistive concrete construction. The remaining walls are internal to fire area FC1110 and are not fire barriers. The ceiling serves as a fire barrier between adjacent fire areas and is of three hour fire-resistive concrete construction. Access to the room is provided via a non-rated door from passageway 312, or 314.

The floor is common to fire area FC1110 below and is not a fire barrier.

(5) Combustibles Present—(ECLL Applies)

Type	Fire Loading Total Heat of Combustion (MJ)
Cable in trays Electrical Panels	1454 MJ/m^2 NCLL (1454 MJ/m^2 maximum average) applies

(6) Detection Provided—Class A supervised POC detection system in the room and manual pull alarm station at 4.00-J.05 in Rm No. 312.

(7) Suppression Available:

Type	Location/Actuation
Standpipe and hose reel	4.00-J.05, Rm No. 312 4.00-K.95 Rm No. 314/Manual
ABC hand extinguishers	4.00-K.39/Manual

(8) Fire Protection Design Criteria Employed:

(a) The function is located in a fire area which is separate from fire areas providing alternate means of performing the safety or shutdown function.

(b) Fire detection and suppression capability is provided and accessible.

(c) Fire stops are provided for cable tray and piping penetration through designated fire barriers.

(9) Consequences of Fire—Postulated fire assumes the loss of the non-divisional CVCF and DC power and possibly, the division 1 power. Power for divisions 2, 3 and 4 would remain available.

Room cooling is provided by coolers which receive chilled water from the turbine building chilled water system. Room purge (supply and exhaust) is provided by the division 1 HVAC which would be switched to the smoke removal mode upon detection of smoke. The combustion products would then be exhausted directly to the atmosphere without being returned to the division 1 areas. Smoke detection is provided in the branch exhaust duct for the non-safety-related rooms in this fire area (Rm Nos. 311,312, 313 and 314). This is an aid to determining that a fire is in the non-safety-related rooms and not in the division 1 rooms served by the common purge system. See Subsection 9.5.1.1.6 for additional information.

(10) Consequences of Fire Suppression—Suppression extinguishes the fire. Refer to Section 3.4, "Water Level (Flood) Design," for the drain system.

(11) Design Criteria Used for Protection Against Inadvertent Operation, Careless Operation or Rupture of the Suppression System:

(a) Location of manual suppression system in an area external to the room

(b) Refer to Section 3.4, "Water Level (Flood) Design," for the drain system.

(c) ANSI B31.1 Standpipe (rupture unlikely)

(12) Fire Containment or Inhibiting Methods Employed:

(a) The functions are located in a separate fire-resistive enclosure.

(b) The means of fire detection, suppression and alarming are provided and accessible.

(c) Fire stops are provided for cable tray and piping penetrations through rated fire barriers.

(13) Remarks—None.

9A.4.2.3.4 Passageway (Rm No. 314)

(1) Fire Area—FC1110

(2) Equipment: See Table 9A.6-3

Safety-Related	Provides Core Cooling
No	No

(3) Radioactive Material Present—None.

(4) Qualification of Fire Barriers—One wall is internal to fire area FC1110 and therefore is not designated as a fire barrier. The opposite wall is a building exterior wall of three hour fire-resistive concrete construction. Both ends of the passageways have a three hour fire-resistive door. The ceiling is designated as a fire barrier between adjacent fire areas and is of three hour fire-resistive concrete construction. The floor of Rm No. 314 is common to fire area FC1110 below and is not a fire barrier.

(5) Combustibles Present—(NCLL Applies)

Type	Fire Loading Total Heat of Combustion (MJ)
Cable in trays	727 MJ/m^2 NCLL (727 MJ/m^2 maximum average) applies

(6) Detection Provided—Class A Supervised POC detection system in the room and manual pull alarm stations at 4.00-K.95.

(7) Suppression Available:

Type	Location/Actuation
Standpipe and hose reel	4.00-K.95/Manual
ABC hand extinguishers	4.1–K.95/Manual

(8) Fire Protection Design Criteria Employed:

(a) The function is located in the room.

(b) Fire suppression and detection capability is provided and accessible.

(c) Fire stops are provided for cable tray and piping penetrations through designated fire barriers.

(9) Consequences of Fire—Postulated fire assumes loss of the functions. Non-divisional CVCF and possibly division 1 power would be lost as the area is served by the division 1 HVAC System. Power for divisions 2, 3 and 4 would remain available.

Smoke control is by the normal HVAC System functioning in the smoke control mode. Refer to 9.5.1.1.6 for additional information.

(10) Consequences of Fire Suppression—Suppression extinguishes the fire. Refer to Section 3.4, "Water Level (Flood) Design," for the drain system.

(11) Design Criteria Used for Protection Against Inadvertent Operation, Careless Operation or Rupture of the Suppression System.

(a) Refer to Section 3.4, "Water Level (Flood) Design," for the drain system.

(b) ANSI B31.1 standpipe (rupture unlikely)

(12) Fire Containment or Inhibiting Methods Employed:

(a) The functions are located in a separate fire-resistive enclosure.

(b) The means of fire detection, suppression and alarming are provided and accessible.

(c) Fire stops are provided for cable tray and piping penetrations through rated fire barriers.

(13) Remarks—None.

9A.4.2.3.5 Battery Room Div 2 (Rm No. 322)

(1) Fire Area—FC1210

(2) Equipment: See Table 9A.6-3

Safety-Related	Provides Core Cooling
Yes, D2	Yes, D2

(3) Radioactive Material Present—None.

(4) Qualification of Fire Barriers—Three walls are internal to fire area FC1210 and therefore are not designated as fire barriers. The remaining wall is common to fire area FC3410 and is of three hour fire-resistive concrete construction. The ceiling of Rm No. 322 is common to fire area FC4910 and is a designated fire barrier. It is of three hour fire-resistive concrete construction. Access to Rm No. 322 is provided from Rm No. 321. The floor of Rm No. 322 is common to fire area FC1210 below and is not a fire barrier.

(5) Combustibles Present—(ECLL Applies)

Type	Fire Loading Total Heat of Combustion (MJ)
Cable in trays. Battery cases HVAC will maintain the hydrogen concentration below 2 vol-%.	727 MJ/m^2 NCLL (727 MJ/m^2 maximum average) applies

(6) Detection Provided—Class A supervised POC detection system in the room and manual pull alarm station at 1.45-J.60, room 321.

(7) Suppression Available:

Type	Location/Actuation
Standpipe and hose reel	1.45-J.53/Manual
ABC hand extinguishers	1.45-J.60 & 2.05-J.68/Manual

(8) Fire Protection Design Criteria Employed:

(a) The function is located in a fire area which is separate from fire areas providing an alternate means of performing the safety or shutdown functions.

(b) Fire detection and suppression capability is provided and accessible.

(c) Fire stops are provided for cable tray penetrations through designated fire barriers.

(9) Consequences of Fire—Postulated fire assumes loss of the function. Division 2 power may be lost. Division 4 power may also be lost due to the shared ventilation system, Division 1 and 3 power would remain available. Smoke control is by the normal HVAC System functioning in the smoke control mode. Refer to 9.5.1.1.6 for additional information.

(10) Consequences of Fire Suppression—Suppression extinguishes the fire. Refer to Section 3.4, "Water Level (Flood) Design," for the drain system.

(11) Design Criteria Used for Protection Against Inadvertent Operation, Careless Operation or Rupture of the Suppression System:

(a) Location of manual suppression system in a room external to the room containing the batteries and cable

(b) Provision of raised supports for the batteries

(c) ANSI B31.1 standpipe (rupture unlikely)

(d) Refer to Section 3.4, "Water Level (Flood) Design," for the drain system.

(12) Fire Containment or Inhibiting Methods Employed:

(a) The functions are located in a separate fire-resistive enclosure.

(b) The means of fire detection, suppression and alarming are provided and accessible.

(c) Fire stops are provided for cable tray and piping penetrations through rated fire barriers.

(13) Remarks—None.

9A.4.2.3.6 Division 2 Electrical Equipment Room (Rm No. 323)

(1) Fire Area—FC1210

(2) Equipment: See Table 9A.6-3

Safety-Related	Provides Core Cooling
Yes, D2	Yes, D2

(3) Radioactive Material Present—None.

(4) Qualification of Fire Barriers—The wall in common with the adjacent fire area FC3410 is designated as a fire barrier and is of three hour fire-resistive concrete construction. The remaining walls are internal to fire area FC1210 and are not fire barriers. The ceiling of Rm No. 323 is common to fire area FC4910 and serves as a fire barrier between adjacent fire areas. Therefore it is of three hour fire-resistive concrete construction. Access to Rm No. 323 is provided from Rm No. 321. The floor of Rm No. 323 is common to fire area FC1210 below and therefore is not a fire barrier.

(5) Combustibles Present—(ECLL Applies)

Type	Fire Loading Total Heat of Combustion (MJ)
Cable in trays Electrical Panels	1454 MJ/m^2 NCLL (1454 MJ/m^2 maximum average) applies

(6) Detection Provided—Class A supervised POC detection system in the room and manual pull alarm station at 1.45- J.53 in Rm No. 321.

(7) Suppression Available:

Type	Location/Actuation
Standpipe and hose reel	1.45-J.53/Manual
ABC hand extinguishers	2.05-J.68 & 1.8-K.83/Manual

(8) Fire Protection Design Criteria Employed:

(a) The function is located in a fire area which is separate from Fire areas providing alternate means of performing the safety or shutdown functions.

(b) Fire detection and suppression capability is provided and accessible.

(c) Fire stops are provided for cable tray and piping penetration through designated fire barriers.

(9) Consequences of Fire—Postulated fire assumes the loss of division 2 electrical power, and possibly division 4 power also due to the shared HVAC System. Power for divisions 1 and 3 would remain available. Smoke control is by the normal HVAC System functioning in the smoke control mode. Refer to Subsection 9.5.1.1.6 for additional information.

(10) Consequences of Fire Suppression—Suppression extinguishes the fire. Refer to Section 3.4, "Water Level (Flood) Design," for the drain system.

(11) Design Criteria Used for Protection Against Inadvertent Operation, Careless Operation or Rupture of the Suppression System:

(a) Location of manual suppression system in an area external to the room

(b) Refer to Section 3.4, "Water Level (Flood) Design," for the drain system.

(c) ANSI B31.1 standpipe (rupture unlikely)

(12) Fire Containment or Inhibiting Methods Employed:

(a) The functions are located in a separate fire-resistive enclosure.

(b) The means of fire detection, suppression and alarming are provided and accessible.

(c) Fire stops are provided for cable tray and piping penetrations through rated fire barriers.

(13) Remarks—None.

9A.4.2.3.7 Division 4 Electrical Equipment Room (Rm No. 342)

(1) Fire Area—FC3410

(2) Equipment: See Table 9A.6-3

Safety-Related	Provides Core Cooling
Yes, D4	Yes, D4 (Indirectly by Sensors)

(3) Radioactive Material Present—None.

(4) Qualification of Fire Barriers—The walls in common with the adjacent fire areas (FC1110 and FC1210) are designated as fire barriers and are of three hour fire-resistive concrete construction. The remaining wall is internal to fire area FC3410 and is not a fire barrier. The ceiling of Rm No. 342 is common to fire area FC4910 and serves as a fire barrier between adjacent fire areas. It is of three hour fire-resistive concrete construction. Access to Rm No. 342 is provided from Rm No. 343. The floor of Rm No. 342 is common to fire area FC1210 below and is of three hour fire-resistive concrete construction.

(5) Combustibles Present—(ECLL Applies)

Type	Fire Loading Total Heat of Combustion (MJ)
Cable in trays Electrical Panels	1454 MJ/m^2 NCLL (1454 MJ/m^2 maximum average) applies

(6) Detection Provided—Class A supervised POC detection system in the room and manual pull alarm station at 1.45-J.53 in Rm No. 321.

(7) Suppression Available:

Type	Location/Actuation
Standpipe and hose reel	1.45-J.53, and 4.00-K.95/Manual
ABC hand extinguishers	2.52-K.10/Manual

(8) Fire Protection Design Criteria Employed:

(a) The function is located in a fire area which is separate from fire areas providing alternate means of performing the safety and shutdown function.

(b) Fire detection and suppression capability is provided and accessible.

(c) Fire stops are provided for cable tray penetrations through designated fire barriers.

(9) Consequences of Fire—Postulated fire assumes the loss of the division 4 electrical power and possibly division 2 power also due to the shared HVAC System. Power for divisions 1 and 3 would remain available. Smoke control is by the normal HVAC System functioning in the smoke control mode. Refer to Subsection 9.5.1.1.6 for additional information.

(10) Consequences of Fire Suppression—Suppression extinguishes the fire. Refer to Section 3.4, "Water Level (Flood) Design," for the drain system.

(11) Design Criteria Used for Protection Against Inadvertent Operation, Careless Operation or Rupture of the Suppression System:

(a) Location of manual suppression system in an area external to the room

(b) Refer to Section 3.4, "Water Level (Flood) Design," for the drain system.

(c) ANSI B31.1 standpipe (rupture unlikely)

(12) Fire Containment or Inhibiting Methods Employed:

(a) The functions are located in a separate fire-resistive enclosure.

(b) The means of fire detection, suppression and alarming are provided and accessible.

(c) Fire stops are provided for cable tray and piping penetrations through rated fire barriers.

(13) Remarks—None.

9A.4.2.3.8 Battery Room Division 4 (Rm No. 341)

(1) Fire Area—FC3410

(2) Equipment: See Table 9A.6-3

Safety-Related	Provides Core Cooling
Yes, D4	Yes, D4

(3) Radioactive Material Present—None.

(4) Qualification of Fire Barriers—One wall is internal to fire area FC3410 and therefore is not a fire barrier. The remaining walls of Rm No. 341 are common to fire areas FC1210 and FC1110 and are designated as fire barriers. They are of three hour fire-resistive concrete construction. The ceiling of Rm. No. 341 is common to adjacent fire area FC4910 and is of three hour fire-resistive concrete construction. Access to Rm No. 341 is from Rm No. 321. The floor of Rm No. 341 is common to fire area FC1210 below and is of three hour fire-resistive concrete construction.

(5) Combustibles Present—(NCLL Applies)

Type	Fire Loading Total Heat of Combustion (MJ)
Cable in trays. HVAC will maintain the hydrogen concentration below 2 vol-%.	727 MJ/m^2 NCLL (727 MJ/m^2 maximum average) applies

(6) Detection Provided—Class A supervised POC detection system in the room and manual pull alarm station at 1.45-J.60 (Rm No. 321) and 4.00-J.05 (Rm No. 312).

(7) Suppression Available:

Type	Location/Actuation
Standpipe and hose reel	1.45-J.53 & 4.00-J.05/Manual
ABC hand extinguishers	1.45-J.53 and 4.00-J.05/Manual

(8) Fire Protection Design Criteria Employed:

(a) The function is located in a fire area which is separate from fire areas providing alternate means of performing the safety or shutdown functions.

(b) Fire detection and suppression capability is provided and accessible.

(c) Fire stops are provided for cable tray penetrations through designated fire barriers.

(9) Consequences of Fire—Postulated fire assumes the loss of the division 4 electrical power and possibly division 2 power due to the shared HVAC System. Power for divisions 1 and 3 would remain available.

Smoke control is by the normal HVAC System functioning in the smoke control mode. Refer to Subsection 9.5.1.1.6 for additional information.

(10) Consequences of Fire Suppression—Suppression extinguishes the fire. Refer to Section 3.4, "Water Level (Flood) Design," for the drain system.

(11) Design Criteria Used for Protection Against Inadvertent Operation, Careless Operation or Rupture of the Suppression System:

(a) Location of manual suppression system in a room external to the room containing the batteries and cable

(b) Provision of raised supports for the batteries

(c) ANSI B31.1 standpipe (rupture unlikely)

(d) Refer to Section 3.4, "Water Level (Flood) Design," for the drain system.

(12) Fire Containment or Inhibiting Methods Employed:

(a) The functions are located in a separate fire-resistive enclosure.

(b) The means of fire detection, suppression and alarming are provided and accessible.

(c) Fire stops are provided for cable tray and piping penetrations through rated fire barriers.

(13) Remarks—None.

9A.4.2.3.9 Passageway (Rm No. 343)

(1) Fire Area—3410

(2) Equipment: See Table 9A.6-3

Safety-Related	Provides Core Cooling
Yes, D4	Yes, D4

(3) Radioactive Material Present—None.

(4) Qualification of Fire Barriers—One wall is internal to fire area FC3410 and is not a fire barrier. The opposite wall is a building exterior wall of three hour fire-resistive concrete construction. Both ends of the passageway have three hour fire-resistive doors. The ceiling is designated as a fire barrier between adjacent fire areas and is of three hour fire-resistive concrete construction. The floor of Rm No. 343 is common to adjacent fire area FC1110 below and is also of three hour fire-resistive concrete construction.

(5) Combustibles Present—(NCLL Applies)

Type	Fire Loading Total Heat of Combustion (MJ)
Cable in trays	727 MJ/m^2 NCLL (727 MJ/m^2 maximum average) applies

(6) Detection Provided—Class A Supervised POC detection system in the room and manual pull alarm stations at 2.72-K.95.

(7) Suppression Available:

Type	Location/Actuation
Hose reel	3.30-K.95/Manual
ABC hand extinguishers	2.72-K.95/Manual

(8) Fire Protection Design Criteria Employed:

(a) The function is located in a fire area which is separate from fire areas providing alternate means of performing the safety or shutdown functions.

(b) Fire detection and suppression capability is provided and accessible.

(c) Fire stops are provided for cable tray and piping penetrations through designated fire barriers.

(9) Consequences of Fire—Postulated fire assumes the loss of the division 4 electrical power and possibly division 2 power also due to the shared HVAC System. Power for divisions 1 and 3 power would remain available. Smoke control is by the normal HVAC System functioning in the smoke control mode. Refer to Subsection 9.5.1.1.6 for additional information.

(10) Consequences of Fire Suppression—Suppression extinguishes the fire. Refer to Section 3.4, "Water Level (Flood) Design," for the drain system.

(11) Design Criteria Used for Protection Against Inadvertent Operation, Careless Operation or Rupture of the Suppression System.

(a) Refer to Section 3.4, "Water Level (Flood) Design," for the drain system.

(b) ANSI B31.1, Standpipe (rupture unlikely)

(12) Fire Containment or Inhibiting Methods Employed:

(a) The functions are located in a separate fire-resistive enclosure.

(b) The means of fire detection, suppression and alarming are provided and accessible.

(c) Fire stops are provided for cable tray and piping penetrations through rated fire barriers.

(13) Remarks—None.

9A.4.2.3.10 Passageway (Rm No. 321)

(1) Fire Area—FC1210

(2) Equipment: See Table 9A.6-3

Safety-Related	Provides Core Cooling
Yes, D2	Yes, D2

(3) Radioactive Material Present—None.

(4) Qualification of Fire Barriers—Rm No. 321 is a passageway that extends across the end of the control building and along approximately one third of its length on each side. The three building exterior walls are designated as fire barriers and are of three hour fire-resistive concrete construction. The three internal walls (except for a section of one wall) are common to adjacent fire area FC1210 and are not fire barriers. The section not common to fire area FC1210 is common to adjacent fire area FC3410 and is of three hour fire-resistive concrete construction. At each end of the passageway there is a three hour fire barrier door separating fire area FC1210 from fire area FC1110 and fire area FC3410. The ceiling serves as a fire barrier between adjacent fire areas and is of three hour fire-resistive concrete construction. A stairwell (Rm No. 325) in the passageway provides access to the control room floor above. An alternate means of access and egress, that is accessible from any place on the 3500 mm level, is provided by a stairwell (Rm No. 336) leading up or down from Rm No. 333. The floor of Rm No. 321 is common to fire area FC1210 below and therefore is not a fire barrier.

(5) Combustibles Present—(NCLL Applies)

Type	Fire Loading Total Heat of Combustion (MJ)
Cable in trays	727 MJ/m^2 NCLL (727 MJ/m^2 maximum average) applies

(6) Detection Provided—Class A Supervised POC detection system in the room and manual pull alarm stations at 1.45-J.60.

(7) Suppression Available:

Type	Location/Actuation
Standpipe and hose reel	1.45-J.53/Manual
ABC hand extinguishers	1.80-K.95 & 1.45-J60/Manual

(8) Fire Protection Design Criteria Employed:

(a) The function is located in a fire area which is separate from fire areas providing alternate means of performing the safety or shutdown function.

(b) Fire detection and suppression capability is provided and accessible.

(c) Fire stops are provided for cable tray and piping penetrations through designated fire barriers.

(9) Consequences of Fire—Postulated fire assumes loss of division 2. Electrical divisions 1, 3 and 4 would remain operational.

Smoke control is by the normal HVAC System functioning in the smoke control mode. Refer to Subsection 9.5.1.1.6 for additional information.

(10) Consequences of Fire Suppression—Suppression extinguishes the fire. Refer to Section 3.4, "Water Level (Flood) Design," for the drain system.

(11) Design Criteria Used for Protection Against Inadvertent Operation, Careless Operation or Rupture of the Suppression System.

(a) Refer to Section 3.4, "Water Level (Flood) Design," for the drain system.

(b) ANSI B31.1, Standpipe and hose reel (rupture unlikely)

(12) Fire Containment or Inhibiting Methods Employed:

(a) The functions are located in a separate fire-resistive enclosure.

(b) The means of fire detection, suppression and alarming are provided and accessible.

(c) Fire stops are provided for cable tray and piping penetrations through rated fire barriers.

(13) Remarks—None.

9A.4.2.3.11 Division 2 HVAC Chase (Rm No. 324)

(1) Fire Area—FC1210

(2) Equipment: See Table 9A.6-3

Safety-Related	Provides Core Cooling
Yes, D2	Yes, D2

(3) Radioactive Material Present—None.

(4) Qualification of Fire Barriers—Rm No. 324 is defined as vertical section of HVAC chase extending from the ceiling of Rm No. 121, formed by the floor at the 3500 mm elevation, to the floor of Rm No. 627 at the 17150 mm elevation. Three of the walls between the 3500 mm elevation and the ceiling, formed by the floor at the 7900 mm elevation, are internal to fire area FC1210 and are not fire barriers. The fourth wall is common with Rm No. 342 (FC3410) and is designated as a fire barrier. It is of three hour fire-resistive concrete construction. Access to Rm No. 324 from the 3500 mm level is provided by a removable panel. All walls of Rm No. 324 between the floor at the 7900 mm elevation and the ceiling, formed by the floor at the 12300 mm elevation, are of three hour fire-resistive concrete construction. Access to Rm No. 324 at the 7900 mm elevation is provided by a three hour fire-resistive removable panel. Two of the walls of Rm No. 324 between the floor at the 12300 mm elevation and the ceiling, formed by the floor at the 17150 mm elevation, are internal to fire area FC1210 and are not fire barriers. Another wall is common to adjacent Rm No. 522 (FC4910) and the fourth wall is common to adjacent Rm No. 506 (FC5110). Both are designated as fire barriers and are of three hour fire-resistive concrete construction. Access to Rm No. 324 at the 12300 mm elevation is provided from Rm No. 521 by a removable panel.

(5) Combustibles Present—(NCLL Applies)

Type	Fire Loading Total Heat of Combustion (MJ)
Cable in trays	727 MJ/m^2 NCLL (727 MJ/m^2 maximum average) applies

(6) Detection Provided—Class A Supervised POC detection system in the room.

(7) Suppression Available:

Type	Location/Actuation
Standpipe and hose reel	4.0-K.95, 1.4 - J.5/Manual
ABC hand extinguishers	4.0-K.95, 1.4-J.5, 1.85-K.95/Manual

(8) Fire Protection Design Criteria Employed:

(a) The function is located in a fire area which is separate from fire areas providing alternate means of performing the safety or shutdown functions.

(b) Fire detection and suppression capability is provided and accessible.

(9) Consequences of Fire—Postulated fire assumes loss of the function. Therefore, it is assumed that loss of the division 2 HVAC would result in the necessity of shutting down the RCW “B” System and consequently the loss of all of division 2. RCW divisions “A” and “C” would remain operational.

Smoke control is by the normal HVAC System functioning in the smoke control mode. Refer to Subsection 9.5.1.1.6 for additional information.

(10) Consequences of Fire Suppression—Suppression extinguishes the fire. Refer to Section 3.4, "Water Level (Flood) Design," for the drain system.

(11) Design Criteria Used for Protection Against Inadvertent Operation, Careless Operation or Rupture of the Suppression System.

(a) Refer to Section 3.4, "Water Level (Flood) Design," for the drain system.

(b) Location of the sprinkler system external to the chase

(12) Fire Containment or Inhibiting Methods Employed:

(a) The function is located in a separate fire-resistive enclosure.

(b) The means of fire detection, suppression and alarming are provided and accessible.

(c) Fire stops are provided for cable tray and piping penetrations through rated fire barriers.

(13) Remarks—Quantities of cable may be so small that they will be in conduit rather than cable trays.

9A.4.2.3.12 Battery Room Division 1 (Rm No. 316)

(1) Fire Area—FC1110

(2) Equipment: See Table 9A.6-3

Safety-Related	Provides Core Cooling
Yes, D1	Yes, D1

(3) Radioactive Material Present—None.

(4) Qualification of Fire Barriers—Two walls of Rm No. 316 are internal to fire area FC1110 and therefore are not designated as fire barriers. The third wall common with room 313 is a 3 h fire barrier for the purpose of investment protection. A fourth wall is common to fire area FC1310 and is of three hour fire-resistive concrete construction. The ceiling of Rm No. 316 is common to fire area FC4910 and serves as a fire barrier. It is of three hour fire-resistive concrete construction. Access to Rm No. 316 is provided from Rm No. 315. The floor of Rm No. 316 is common to fire area FC1310 below and is of three hour fire-resistive concrete construction.

(5) Combustibles Present—(ECLL Applies)

Type	Fire Loading Total Heat of Combustion (MJ)
Cable in trays. HVAC will maintain the hydrogen concentration below 2 vol-%.	1454 MJ/m^2 NCLL (1454 MJ/m^2 maximum average) applies

(6) Detection Provided—Class A supervised POC detection system in the room and manual pull alarm stations at 4.05-J.05 and 6.53-J.57.

(7) Suppression Available:

Type	Location/Actuation
Standpipe and hose reel	6.53-J.57 & 4.00-J.05/Manual
ABC hand extinguishers	5.55-J.66/Manual

(8) Fire Protection Design Criteria Employed:

(a) The function is located in a fire area which is separate from fire areas providing alternate means of performing the safety or shutdown functions.

(b) Fire detection and suppression capability is provided and accessible.

(c) Fire stops are provided for cable tray penetrations through designated fire barriers.

(9) Consequences of Fire—Postulated fire assumes loss of the division 1 Battery Room and Electrical Equipment Room and consequently all of division 1. Divisions 2, 3 and 4 would remain operational.

Smoke control is by the normal HVAC System functioning in the smoke control mode. Refer to Subsection 9.5.1.1.6 for additional information.

(10) Consequences of Fire Suppression—Suppression extinguishes the fire. Refer to Section 3.4, "Water Level (Flood) Design," for the drain system.

(11) Design Criteria Used for Protection Against Inadvertent Operation, Careless Operation or Rupture of the Suppression System:

(a) Location of manual suppression system external to the room

(b) Provision of raised supports for the batteries

(c) ANSI B31.1 standpipe (rupture unlikely)

(d) Refer to Section 3.4, "Water Level (Flood) Design," for the drain system.

(12) Fire Containment or Inhibiting Methods Employed:

(a) The functions are located in a separate fire-resistive enclosure.

(b) The means of fire detection, suppression and alarming are provided and accessible.

(c) Fire stops are provided for cable tray and piping penetrations through rated fire barriers.

(13) Remarks—None.

9A.4.2.3.13 Division 1 Electrical Equipment Room (Rm No. 317)

(1) Fire Area—FC1110

(2) Equipment: See Table 9A.6-3

Safety-Related	Provides Core Cooling
Yes, D1	Yes, D1

(3) Radioactive Material Present—None.

(4) Qualification of Fire Barriers—The walls common with the adjacent Rm Nos. 331 and 332 are common to the division 3 fire area FC1310 and are designated as a fire barrier. They are of three hour fire-resistive concrete construction. The walls common with rooms 311, 312, and 313 are of a 3 h fire barrier for the purpose of investment protection. The remaining walls are internal to fire area FC1110 and are not fire barriers. The ceiling of Rm No. 317 is common to fire area FC4910 and serves as a fire barrier between adjacent fire areas. It is of three hour fire-resistive concrete construction. Access to Rm No. 317 is provided from Rm No. 318. The floor of Rm No. 317 is common to division 3 fire area FC1310 below and is of three hour fire-resistive concrete construction.

(5) Combustibles Present—(ECLL Applies)

Type	Fire Loading Total Heat of Combustion (MJ)
Cable in trays Electrical Equipment Panels	1454 MJ/m^2 NCLL (1454 MJ/m^2 maximum average) applies

(6) Detection Provided—Class A supervised POC detection system in the room and manual pull alarm station at 4.05-J.05 and 6.53-J.62.

(7) Suppression Available:

Type	Location/Actuation
Standpipe and hose reel	4.00-J.05, 6.53-J.57, and 4.00-K.95/Manual
ABC hand extinguishers	5.55-J.66 & 5.62-K.83/Manual

(8) Fire Protection Design Criteria Employed:

(a) The function is located in a fire area which is separate from fire areas providing alternate means of performing the safety or shutdown function.

(b) Fire detection and suppression capability is provided and accessible.

(c) Fire stops are provided for cable tray penetration through designated fire barriers.

(9) Consequences of Fire—Postulated fire assumes the loss of division 1 Electrical Power. Divisions 2, 3 and 4 power would remain operational. Smoke control is by the normal HVAC System functioning in the smoke control mode. Refer to Subsection 9.5.1.1.6 for additional information.

(10) Consequences of Fire Suppression—Suppression extinguishes the fire. Refer to Section 3.4, "Water Level (Flood) Design," for the drain system.

(11) Design Criteria Used for Protection Against Inadvertent Operation, Careless Operation or Rupture of the Suppression System:

(a) Location of manual suppression system in an area external to the room

(b) Refer to Section 3.4, "Water Level (Flood) Design," for the drain system.

(c) ANSI B31.1 standpipe (rupture unlikely)

(12) Fire Containment or Inhibiting Methods Employed:

(a) The functions are located in a separate fire-resistive enclosure.

(b) The means of fire detection, suppression and alarming are provided and accessible.

(c) Fire stops are provided for cable tray and piping penetrations through rated fire barriers.

(13) Remarks—None.

9A.4.2.3.14 Division 1 HVAC Chase (Rm No. 319)

(1) Fire Area—FC1110

(2) Equipment: See Table 9A.6-3

Safety-Related	Provides Core Cooling
Yes, D1	Yes, D1

(3) Radioactive Material Present—None.

(4) Qualification of Fire Barriers—Rm No. 319 is defined as a vertical section of HVAC chase extending from the ceiling of Rm No. 111, formed by the floor at the 3500 mm elevation, to the floor of Rm No. 512 at the 12300 mm elevation. All four walls between the floor at the 3500 mm elevation and the ceiling, formed by the floor at the 7900 mm elevation, are internal to fire area FC1110 and therefore are not designated as fire barriers. Access to Rm No. 319 from the 3500 mm level is provided by a removable panel. All four walls of Rm No. 319 between the floor at the 7900 mm elevation and the ceiling, formed by the floor at the 12300 mm elevation, are common to fire area FC4910 and are designated as fire barriers. Access to Rm No. 319 on the 7900 mm level is provided by a three hour fire-resistive removable panel.

(5) Combustibles Present—(NCLL Applies)

Type	Fire Loading Total Heat of Combustion (MJ)
Cable in trays	727 MJ/m^2 NCLL (727 MJ/m^2 maximum average) applies

(6) Detection Provided—Class A Supervised POC detection system in the room.

(7) Suppression Available:

Type	Location/Actuation
Standpipe and hose reel	4.0 - K.95 & 6.7 - K.85/Manual
ABC hand extinguishers	4.0 - K.95, 6.7 - K.85 & 5.5 - K.95/Manual

(8) Fire Protection Design Criteria Employed:

(a) The function is located in a fire area which is separate from fire areas providing alternate means of performing safety or shutdown functions.

(b) Fire detection and suppression capability is provided and accessible.

(c) Fire stops are provided for cable tray penetrations through rated fire barriers.

(9) Consequences of Fire—Postulated fire assumes loss of the function. Therefore, it is assumed that loss of the division 1 HVAC would result in the necessity of shutting down the RCW “A” System, however, RCW divisions “B” and “C” would remain operational.

Smoke control is by the normal HVAC System functioning in the smoke control mode. Refer to Subsection 9.5.1.1.6 for additional information.

(10) Consequences of Fire Suppression—Suppression extinguishes the fire. Refer to Section 3.4, "Water Level (Flood) Design," for the drain system.

(11) Design Criteria Used for Protection Against Inadvertent Operation, Careless Operation or Rupture of the Suppression System.

(a) Refer to Section 3.4, "Water Level (Flood) Design," for the drain system.

(b) Location of the suppression system external to the chase

(12) Fire Containment or Inhibiting Methods Employed:

(a) The functions are located in a separate fire-resistive enclosure.

(b) The means of fire detection, suppression and alarming are provided and accessible.

(c) Fire stops are provided for cable tray and piping penetrations through rated fire barriers.

(13) Remarks—Quantities of cable may be so small that they will be in conduit rather than cable tray.

9A.4.2.3.15 Battery Room Division 3 (Rm No. 332)

(1) Fire Area—FC1310

(2) Equipment: See Table 9A.6-3

Safety-Related	Provides Core Cooling
Yes, D3	Yes, D3

(3) Radioactive Material Present—None.

(4) Qualification of Fire Barriers—Three walls of Rm No. 332 are internal to fire area FC1310 and therefore are not designated as fire barriers. A fourth wall is common to fire area FC1110 and is of three hour fire-resistive concrete construction. The ceiling of Rm No. 332 is common to fire area FC4910 and is also of three hour fire-resistive concrete construction. Access to Rm No. 332 is provided from Rm No. 333 by non-rated doors. The floor of Rm No. 332 is common to fire area FC1310 below and is not a fire barrier.

(5) Combustibles Present—(NCLL Applies)

Type	Fire Loading Total Heat of Combustion (MJ)
Cable in trays. HVAC will maintain the hydrogen concentration below 2 vol-%.	727 MJ/m^2 NCLL (727 MJ/m^2 maximum average) applies

(6) Detection Provided—Class A supervised POC detection system in the room and manual pull alarm stations at 4.05-J.05 and 6.53-J.58.

(7) Suppression Available:

Type	Location/Actuation
Standpipe and hose reel	6.53-J.53 & 4.00-J.05/Manual
ABC hand extinguishers	6.02-K.14/Manual

(8) Fire Protection Design Criteria Employed:

(a) The function is located in a fire area which is separate from fire areas providing alternate means of performing safety or shutdown functions.

(b) Fire detection and suppression capability is provided and accessible.

(c) Fire stops are provided for cable tray penetrations through designated fire barriers.

(9) Consequences of Fire—Postulated fire assumes loss of the division 3 Battery Room and Electrical Equipment Room. Divisions 1, 2 and 4 would remain operational. Smoke control is by the normal HVAC System functioning in the smoke control mode. Refer to Subsection 9.5.1.1.6 for additional information.

(10) Consequences of Fire Suppression—Suppression extinguishes the fire. Refer to Section 3.4, "Water Level (Flood) Design," for the drain system.

(11) Design Criteria Used for Protection Against Inadvertent Operation, Careless Operation or Rupture of the Suppression System:

(a) Location of manual suppression system in a room external to the room containing the batteries and cable

(b) Provision of raised supports for the batteries

(c) ANSI B31.1 standpipe (rupture unlikely)

(d) Refer to Section 3.4, "Water Level (Flood) Design," for the drain system.

(12) Fire Containment or Inhibiting Methods Employed:

(a) The functions are located in a separate fire-resistive enclosure.

(b) The means of fire detection, suppression and alarming are provided and accessible.

(c) Fire stops are provided for cable tray and piping penetrations through rated fire barriers.

(13) Remarks—None.

9A.4.2.3.16 Division 3 Elect. Equipment Room (Rm No. 331)

(1) Fire Area—FC1310

(2) Equipment: See Table 9A.6-3

Safety-Related	Provides Core Cooling
Yes, D3	Yes, D3

(3) Radioactive Material Present—None.

(4) Qualification of Fire Barriers—The wall in common with the adjacent fire area (FC1110) is designated as a fire barrier and therefore is of three hour fire-resistive concrete construction. The remaining walls are internal to fire area

FC1310 and are not fire barriers. The ceiling of Rm No. 331 is common to fire area FC4910 and serves as a fire barrier between adjacent fire areas. It is of three hour fire-resistive concrete construction. Access to room 331 is provided from Rm No. 333. The floor of Rm No. 331 is common to fire area FC1310 below and therefore is not a fire barrier.

(5) Combustibles Present—(ECLL Applies)

Type	Fire Loading Total Heat of Combustion (MJ)
Cable in trays Electrical panels	1454 MJ/m^2 NCLL (1454 MJ/m^2 maximum average) applies

(6) Detection Provided—Class A supervised POC detection system in the room and manual pull alarm station at 6.53-J.58.

(7) Suppression Available:

Type	Location/Actuation
Standpipe and hose reel	4.05-J.05 & 6.53-K.75/Manual
ABC hand extinguishers	6.02-K.14 & 6.10-K.83/Manual

(8) Fire Protection Design Criteria Employed:

(a) The function is located in a fire area which is separate from fire areas providing alternate means of performing the safety or shutdown function.

(b) Fire detection and suppression capability is provided and accessible.

(c) Fire stops are provided for cable tray penetration through designated fire barriers.

(9) Consequences of Fire—Postulated fire assumes the loss of division 3 Electrical Power. Divisions 1, 2 and 4 power would remain operational.

Smoke control is by the normal HVAC System functioning in the smoke control mode. Refer to Subsection 9.5.1.1.6 for additional information.

(10) Consequences of Fire Suppression—Suppression extinguishes the fire. Refer to Section 3.4, "Water Level (Flood) Design," for the drain system.

(11) Design Criteria Used for Protection Against Inadvertent Operation, Careless Operation or Rupture of the Suppression System:

(a) Location of manual suppression system in an area external to the room containing the safety-related equipment

(b) Refer to Section 3.4, "Water Level (Flood) Design," for the drain system.

(12) Fire Containment or Inhibiting Methods Employed:

(a) The functions are located in a separate fire-resistive enclosure.

(b) The means of fire detection, suppression and alarming are provided and accessible.

(c) Fire stops are provided for cable tray and piping penetrations through rated fire barriers.

(13) Remarks—None.

9A.4.2.3.17 Division 3 HVAC Chase (Rm No. 335)

(1) Fire Area—FC1310

(2) Equipment: See Table 9A.6-3

Safety-Related	Provides Core Cooling
Yes, D3	Yes, D3

(3) Radioactive Material Present—No

(4) Qualification of Fire Barriers—Rm No. 335 is defined as a vertical section of HVAC chase extending from the ceiling of Rm No. 131, formed by the floor at the 3500 mm elevation, to the floor of Rm No. 533 at the 12300 mm elevation. Three of the walls between the floor at the 3500 mm elevation and the ceiling, formed by the floor at the 7900 mm elevation, are internal to fire area FC1310 and therefore are not designated as fire barriers. The fourth wall is common to fire area FC1110 and is of three hour fire-resistive concrete construction. Access to Rm No. 335 on the 3500 mm elevation is provided from Rm No. 331 by a removable panel. All four of the walls of Rm No. 335 between the floor on the 7900 mm elevation and the ceiling, formed by the floor at the 12300 mm elevation, are common to fire area FC4910 and therefore are designated as fire barriers. They are of three hour fire-resistive

concrete construction. Access to Rm No. 335 at the 7900 mm elevation is provided by a three hour fire provided by a three hour fire-resistive removable panel.

(5) Combustibles Present—(NCLL Applies)

Type	Fire Loading Total Heat of Combustion (MJ)
Cable in trays	727 MJ/m^2 NCLL (727 MJ/m^2 maximum average) applies

(6) Detection Provided—Class A Supervised POC detection system in the room.

(7) Suppression Available:

Type	Location/Actuation
Standpipe and hose reel	4.00-K.95 & 6.7 - K.85/Manual
ABC hand extinguishers	4.0 - K.95, 6.7 - K.85 & 5.5 - K.95/Manual

(8) Fire Protection Design Criteria Employed:

(a) The function is located in a fire area which is separate from fire areas providing alternate means of performing the safety or shutdown functions.

(b) Fire detection and suppression capability is provided and accessible.

(c) Fire stops are provided for cable tray penetrations through rated fire barriers.

(9) Consequences of Fire—Postulated fire assumes loss of the function. Therefore, it is assumed that loss of the division 3 HVAC would result in the necessity of shutting down the RCW “C” System, however, RCW divisions “A” and “B” would remain operational.

Smoke control is by the normal HVAC System functioning in the smoke control mode. Refer to Subsection 9.5.1.1.6 for additional information.

(10) Consequences of Fire Suppression—Suppression extinguishes the fire. Refer to Section 3.4, "Water Level (Flood) Design," for the drain system.

(11) Design Criteria Used for Protection Against Inadvertent Operation, Careless Operation or Rupture of the Suppression System:

(a) Refer to Section 3.4, "Water Level (Flood) Design," for the drain system.

(b) Location of the sprinkler suppression system external to the room

(12) Fire Containment or Inhibiting Methods Employed:

(a) The functions are located in a separate fire-resistive enclosure.

(b) The means of fire detection, suppression and alarming are provided and accessible.

(c) Fire stops are provided for cable tray and piping penetrations through rated fire barriers.

(13) Remarks—Quantities of cable may be so small that they will be in conduit rather than cable tray.

9A.4.2.3.18 Passageway (Rm No. 333)

(1) Fire Area—FC1310

(2) Equipment: See Table 9A.6-3

Safety-Related	Provides Core Cooling
Yes, D3	Yes, D3

(3) Radioactive Material Present—None.

(4) Qualification of Fire Barriers—Rm No. 333 is a passageway that extends across the end of the control building and along approximately one fifth of its length on each side. The three building exterior walls are designated as fire barriers and are of three hour fire-resistive concrete construction. The three internal walls are internal to fire area FC1310 and are not fire barriers. At each end of the passageway there is a three hour fire barrier door separating fire area FC1310 from fire area FC1110. The ceiling is common to fire area FC4910 above and is designated as a fire barrier. It is of three hour fire-resistive concrete construction. A stairwell (Rm No. 336) in the passageway provides access to the floors below and the control room floor above. An alternate means of access and egress is provided, from any place on the 3500 level, by a stairwell leading up or down from Rm No. 325. The floor of Rm No. 333 is common to fire area FC1310 below and is not a fire barrier.

(5) Combustibles Present—(NCLL Applies)

Type	Fire Loading Total Heat of Combustion (MJ)
Cable in trays	727 MJ/m^2 NCLL (727 MJ/m^2 maximum average) applies

(6) Detection Provided—Class A Supervised POC detection system in the room and manual pull alarm stations at 6.53-J.58.

(7) Suppression Available:

Type	Location/Actuation
Standpipe and hose reel	6.53-J.53 and 6.53-K.75/Manual
ABC hand extinguishers	6.53-J.58 & 6.53-K.70/Manual

(8) Fire Protection Design Criteria Employed:

(a) The function is located in the fire area which is separate from fire areas providing alternate means of performing the safety or shutdown function.

(b) Fire detection and suppression capability is provided and accessible.

(c) Fire stops are provided for cable tray and piping penetration through designated fire barriers.

(9) Consequences of Fire—Postulated fire assumes loss of the function. Electrical divisions 1, 2 and 4 would remain operational.

Smoke control is by the normal HVAC System functioning in the smoke control mode. Refer to Subsection 9.5.1.1.6 for additional information.

(10) Consequences of Fire Suppression—Suppression extinguishes the fire. Refer to Section 3.4, "Water Level (Flood) Design," for the drain system.

(11) Design Criteria Used for Protection Against Inadvertent Operation, Careless Operation or Rupture of the Suppression System:

(a) Refer to Section 3.4, "Water Level (Flood) Design," for the drain system.

(b) ANSI B31.1, Standpipe and hose reel (rupture unlikely)

(12) Fire Containment or Inhibiting Methods Employed:

(a) The functions are located in a separate fire-resistive enclosure.

(b) The means of fire detection, suppression and alarming are provided and accessible.

(c) Fire stops are provided for cable tray and piping penetrations through rated fire barriers.

(13) Remarks—None.

9A.4.2.3.19 Passageway (Rm No. 318)

(1) Fire Area—FC1110

(2) Equipment: See Table 9A.6-3

Safety-Related	Provides Core Cooling
Yes, D1	Yes, D1

(3) Radioactive Material Present—None.

(4) Qualification of Fire Barriers—One wall is internal to fire area FC1110 and is not a fire barrier. The opposite wall is a building exterior wall of three hour fire-resistive concrete construction. One end of the passageway has a three hour fire barrier door separating it from fire area FC1310. The other end of the passageway, for the investment protection, has a 3 h fire rated door opening into Rm No. 314 which is in the same fire area as Rm No. 318. The ceiling is common to fire area FC4910 above and therefore is designated as a fire barrier. It is of three hour fire-resistive concrete construction. The floor of Rm No. 318 is common to division 3 fire area FC1310 below and is also of three hour fire-resistive concrete construction.

(5) Combustibles Present—(NCLL Applies)

Type	Fire Loading Total Heat of Combustion (MJ)
Cable in trays	727 MJ/m^2 NCLL (727 MJ/m^2 maximum average) applies

(6) Detection Provided—Class A Supervised POC detection system in the room and manual pull alarm station at 6.53-J.58.

(7) Suppression Available:

Type	Location/Actuation
Hose reel	3.30-K.95 & 6.53-K.75/Manual
ABC Hand Extinguisher	5.62-K.83/Manual

(8) Fire Protection Design Criteria Employed:

(a) The function is located in a separate fire-resistive enclosure.

(b) Fire detection and suppression capability is provided and accessible.

(c) Fire stops are provided for cable tray and piping penetrations through designated fire barriers.

(9) Consequences of Fire—Postulated fire assumes loss of the function. Electrical divisions 2, 3 and 4 would remain operational.

Smoke control is by the normal HVAC System functioning in the smoke control mode. Refer to Subsection 9.5.1.1.6 for additional information.

(10) Consequences of Fire Suppression—Suppression extinguishes the fire. Refer to Section 3.4, "Water Level (Flood) Design," for the drain system.

(11) Design Criteria Used for Protection Against Inadvertent Operation, Careless Operation or Rupture of the Suppression System:

(a) Refer to Section 3.4, "Water Level (Flood) Design," for the drain system.

(b) Location of the manual suppression system external to the room

(12) Fire Containment or Inhibiting Methods Employed:

(a) The functions are located in a separate fire-resistive enclosure.

(b) The means of fire detection, suppression and alarming are provided and accessible.

(c) Fire stops are provided for cable tray and piping penetrations through rated fire barriers.

(13) Remarks—None.

9A.4.2.3.20 Passageway (Rm No. 315)

(1) Fire Area—FC1110

(2) Equipment: See Table 9A.6-3

Safety-Related	Provides Core Cooling
Yes, D1	No

(3) Radioactive Material Present—None.

(4) Qualification of Fire Barriers—One wall is internal to fire area FC1110 and is not designated as a fire barrier. The opposite wall is a building exterior wall of three hour fire-resistive concrete construction. One end of the passageway has a three hour fire barrier door separating it from fire area FC1310. The other end of the passageway has a 3 h fire barrier door opening into Rm No. 312 for the purpose of investment protection (also in FC1110). The ceiling is common to fire area FC4910 above and is of three hour fire-resistive concrete construction. The floor of Rm No. 315 is common to fire area FC1310 below and is of three hour fire-resistive concrete construction.

(5) Combustibles Present—(NCLL Applies)

Type	Fire Loading Total Heat of Combustion (MJ)
Cable in trays	727 MJ/m^2 NCLL (727 MJ/m^2 maximum average) applies

(6) Detection Provided—Class A Supervised POC detection system in the room and manual pull alarm station at 4.05-J.05.

(7) Suppression Available:

Type	Location/Actuation
Standpipe and hose reel	4.00-J.05/Manual
ABC hand extinguishers	4.00-J.05/Manual

(8) Fire Protection Design Criteria Employed:

(a) The function is located in a separate fire-resistive enclosure.

(b) Fire detection and suppression capability is provided and accessible.

(c) Fire stops are provided for cable tray and piping penetrations through designated fire barriers.

(9) Consequences of Fire—Postulated fire assumes loss of the function. Electrical divisions 2, 3 and 4 would remain operational.

Smoke control is by the normal HVAC System functioning in the smoke control mode. Refer to Subsection 9.5.1.1.6 for additional information.

(10) Consequences of Fire Suppression—Suppression extinguishes the fire. Refer to Section 3.4, "Water Level (Flood) Design," for the drain system.

(11) Design Criteria Used for Protection Against Inadvertent Operation, Careless Operation or Rupture of the Suppression System:

(a) Refer to Section 3.4, "Water Level (Flood) Design," for the drain system.

(b) Location of the manual suppression system external to the room

(c) ANSI B31.1 Standpipe (rupture unlikely)

(12) Fire Containment or Inhibiting Methods Employed:

(a) The functions are located in a separate fire-resistive enclosure.

(b) The means of fire detection, suppression and alarming are provided and accessible.

(c) Fire stops are provided for cable tray and piping penetrations through rated fire barriers.

(13) Remarks—None.

9A.4.2.3.21 Stairwell (Rm No. 325)

(1) Fire Area—FC1210

(2) Equipment: See Table 9A.6-3

Safety-Related	Provides Core Cooling
Yes, D2	No

(3) Radioactive Material Present—None.

(4) Qualification of Fire Barriers—Rm No. 325 is a stairwell that extends from the 3500 elevation to the 17150 elevation. Walls, floor, and ceiling are concrete and rated 3 h for personnel protection. There is a 3 h rated fire resistive door at each floor elevation. Alternate access is provided by stairwell room 336.

(5) Combustibles Present—(NCLL Applies)

Type	Fire Loading Total Heat of Combustion (MJ)
None	727 MJ/m^2 NCLL (727 MJ/m^2 maximum average) applies

(6) Detection Provided—Class A supervised POC detection system in the room and pull alarm stations near the stairwell landing on each elevation.

(7) Suppression Available:

Type	Location/Actuation
Standpipe and hose reel	1.45-J.53El.3500, El.7900 and El.12300 1.37-J.67 El.17150/Manual
ABC hand extinguishers	1.80-K.83 El.3500 1.30-K65 El.7900 1.45-J.55 El.12300 & 1.30-K.55/Manual

(8) Fire Protection Design Criteria Employed:

(a) The function is located in a separate fire-resistive enclosure.

(b) Fire detection and suppression capability is provided and accessible.

(c) Alternate access and egress are provided by a separate stairwell located on the opposite side of the building.

(9) Consequences of Fire—Postulated fire assumes loss of division 2, and the stairwell. Electrical divisions 1, 3 and 4 would remain operational. Access to the other stairwell is maintained.

Smoke control is by the normal HVAC System functioning in the smoke removal mode. Refer to Subsection 9.5.1.1.6 for additional information.

(10) Consequences of Fire Suppression—Suppression extinguishes the fire. Refer to Section 3.4, "Water Level (Flood) Design," for the drain system.

(11) Design Criteria Used for Protection against Inadvertent Operation, Careless Operation or Rupture of the Suppression System:

(a) Refer to Section 3.4, "Water Level (Flood) Design," for the drain system.

(b) ANSI B31.1, Standpipe and hose reel (rupture unlikely)

(12) Fire Containment or Inhibiting Methods Employed:

(a) The functions are located in a separate fire-resistive enclosure.

(b) The means of fire detection, suppression and alarming are provided and accessible.

(13) Remarks—None.

9A.4.2.3.22 Stairwell (Rm No. 336)

(1) Fire Area—FC1310

(2) Equipment: See Table 9A.6-3

Safety-Related	Provides Core Cooling
No	No

(3) Radioactive Material Present—None.

(4) Qualification of Fire Barriers—Rm No. 336 is a stairwell that extends from the 3500 elevation to the 17150 elevation. Walls, floor, and ceiling are concrete and rated 3 h for personnel protection. There is a 3 h rated fire resistive door at each floor elevation. Alternate access is provided by stairwell room 325.

(5) Combustibles Present—(NCLL Applies)

Type	Fire Loading Total Heat of Combustion (MJ)
None	

(6) Detection Provided—Class A supervised POC detection system in the room and pull alarm stations near the stairwell landing at each elevation.

(7) Suppression Available:

Type	Location/Actuation
Standpipe and hose reel	6.53-K.75 El.3500 & El.7900 660-J.75 El.12300 6.60-J.67 El.17150/Manual
ABC hand extinguishers	6.53-K.75 El.3500 6.53-J.55 & 6.70-K.65 El.7900 660-J.75 & 6.70-K.55 El.12300 6.60-J.67 El.17150/Manual

(8) Fire Protection Design Criteria Employed:

(a) The function is located in a separate fire-resistive enclosure.

(b) Fire detection and suppression capability is provided and accessible.

(c) Alternate access and egress are provided by a separate stairwell located on the opposite side of the building.

(9) Consequences of Fire—Postulated fire assumes loss of division 3, and stairwell. Electrical divisions 1, 2 and 4 would remain operational. Access to the other stairwell is maintained.
Smoke control is by the normal HVAC System functioning in the smoke removal mode. Refer to 9.5.1.1.6 for additional information.

(10) Consequences of Fire Suppression—Suppression extinguishes the fire. Refer to Section 3.4, "Water Level (Flood) Design," for the drain system.

(11) Design Criteria Used for Protection against Inadvertent Operation, Careless Operation or Rupture of the Suppression System:

(a) Refer to Section 3.4, "Water Level (Flood) Design," for the drain system.

(b) ANSI B31.1, Standpipe and hose reel (rupture unlikely)

(12) Fire Containment or Inhibiting Methods Employed:

(a) The functions are located in a separate fire-resistive enclosure.

(b) The means of fire detection, suppression and alarming are provided and accessible.

(13) Remarks—None

9A.4.2.3.23 Elevator (Rm No. 337)

(1) Fire Area—1310

(2) Equipment: See Table 9A.6-3

Safety-Related	Provides Core Cooling
Yes, D3	No

(3) Radioactive Material Present—None.

(4) Qualification of Fire Barriers—Rm No. 337 is an elevator shaft extending from the 3500 elevation to the ceiling formed by the 22200 elevation. Walls, floor and ceiling are concrete and rated 3 h for personnel protection. The elevator door is not fire rated. A separate 3 h rated fire resistive door is provided at each elevator landing doorway.

(5) Combustibles Present—(NCLL Applies)

Type	Fire Loading Total Heat of Combustion (MJ)
Electrical Cables Small amount of elevator motor lubricants	727 MJ/m^2 NCLL (727 MJ/m^2 maximum average) applies

(6) Detection Provided—Class A supervised POC detection in the elevator shaft and pull alarm stations near the elevator door on each elevation.

(7) Suppression Available:

Type	Location/Actuation
Standpipe and hose reel	6.53-J.58 & 6.53-J.70El.3500 6.53-J.58 El.7900 6.60-J.75 El.12300 6.60-J.67 El.17150/Manual
ABC hand extinguishers	6.53-J.58 & 6.53-J.70 El.3500 6.53-J.58 El.7900 6.70-K.55 El.12300 6.70-K.55 El.17150/Manual

(8) Fire Protection Design Criteria Employed:

(a) The function is located in a separate fire-resistive enclosure.

(b) Fire detection and suppression capability is provided and accessible.

(9) Consequences of Fire—Postulated fire assumes loss of the function. Electrical divisions 1, 2 and 4 would remain operational.

Smoke control is by the normal HVAC System functioning in the smoke control mode. Refer to Subsection 9.5.1.1.6 for additional information.

(10) Consequences of Fire Suppression—Suppression extinguishes the fire. Refer to Section 3.4, "Water Level (Flood) Design," for the drain system.

(11) Design Criteria Used for Protection Against Inadvertent Operation, Careless Operation or Rupture of the Suppression System:

(a) Refer to Section 3.4, "Water Level (Flood) Design," for the drain system.

(b) ANSI B31.1, Standpipe and hose reel (rupture unlikely)

(12) Fire Containment or Inhibiting Methods Employed:

(a) The functions are located in a separate fire-resistive enclosure.

(b) The means of fire detection, suppression and alarming are provided and accessible.

(c) Fire stops are provided for cable penetrations through rated fire barriers.

(13) Remarks—None.

9A.4.2.4 Floor Four El 7900 mm

9A.4.2.4.1 Control Room Complex

The Control Room Complex consists of the following rooms, all of which are all located in the same fire area: 491, 492, 493, 494, 495, 496, 497, 498, and 499.

Division 2 and 4 panels are located in Rm No. 495. Division 1 and 3 panels are located in Rm No. 497 and the main operator control panels are located in Rm No. 496. The remaining rooms are offices and passageways.

(1) Fire Area—FC4910

(2) Equipment: See Table 9A.6-3

Safety-Related	Provides Core Cooling
Yes, D1,2,3,4	Yes, D1,2,3,4

(3) Radioactive Material Present—None.

(4) Qualification of Fire Barriers—The outside perimeter of the control room area consists of passageways (Rm Nos.) 491, 492, 493 and 494. The outside walls of these passageways are building exterior walls and are designated as fire barriers, they are of three hour fire-resistive concrete construction. Internal walls are common to fire area FC4910 and are not fire barriers. Stairwells (Rm Nos. 325 and 336) from below (El. 3500 mm) and above (El. 12300 mm) provide access to passageways Rm Nos.491 and 494 respectively via three hour fire barrier doors. Either stairwell is accessible from any place on the 7900 mm level. The floor of the control room is common to other fire areas below and is of three hour fire-resistive concrete construction. Portions of the ceiling, that are not common to fire area FC4910 above, are of three hour fire-resistive concrete construction.

(5) Combustibles Present—(NCLL Applies)

Type	Fire Loading Total Heat of Combustion (MJ)
Cable in conduit Electrical Panels Paper See item (13), Remarks.	727 MJ/m^2 NCLL (727 MJ/m^2 maximum average) applies

(6) Detection Provided—Class A Supervised POC detection system in the room and in the subfloor area and manual pull alarm stations at 1.45-J.60, 4.05-J.07 and 6.53-J.60 and 4.05-K.95.

(7) Suppression Available:

Type	Location/Actuation
Standpipe and hose reel	1.45-J.53, 4.00-J.07, 6.53-J.53 & 4.05-K.95/Manual
ABC hand extinguishers	6.53-J.60, 4.05-J.07, 6.53-J.60, 2.02-J.65, 2.02-K.35 4.00-K.70, 4.00-K.28, 5.99-J.65 5.99-K.35, 4.89-J.45, 6.70-K.65 & 1.30-K.65/Manual

(8) Fire Protection Design Criteria Employed:

(a) The function is located in the fire area which is separate from the Remote Shutdown Rooms.

(b) Fire detection and suppression capability is provided and accessible.

(c) Fire stops are provided for cable tray and piping penetrations through designated fire barriers.

(9) Consequences of Fire—Postulated fire assumes loss of the function. Therefore it is assumed that the Control Room and Computer Room would not remain functional and habitable. Equipment (not in FC4910) on all elevations would remain functional. Shutdown and core cooling would be accomplished from the Remote Shutdown Rooms in the Reactor Building. Smoke control is by the normal HVAC System functioning in the smoke control mode. Refer to 9.5.1.1.6 for additional information.

(10) Consequences of Fire Suppression—Suppression extinguishes the fire. Refer to Section 3.4, "Water Level (Flood) Design," for the drain system.

(11) Design Criteria Used for Protection Against Inadvertent Operation, Careless Operation or Rupture of the Suppression System:

(a) Refer to Section 3.4, "Water Level (Flood) Design," for the drain system.

(b) ANSI B31.1 Standpipes (rupture unlikely)

(c) Provision of raised supports for the equipment

(12) Fire Containment or Inhibiting Methods Employed:

(a) The functions are located in separate, but non fire-resistive enclosures.

(b) The means of fire detection, suppression and alarming are provided and accessible.

(c) Fire stops are provided for cable tray and piping penetrations through rated fire barriers.

(13) Remarks—The Main Control Room includes a raised floor which is considered part of the room. The raised floor area will be used to route cable to and from the Safety System and Logic Control (SSLC) cabinets, the operator bench boards and displays, and the divisional electrical equipment rooms.

The control room area are raised floor are considered to be non-hazard areas per IEEE 384. Section 8.3.3.6.2.2.3 discusses at length the separation criteria applies to divisional electrical cabling in the control room. It was determined that fire suppression equipment is not needed in the raised floor area. The justification for this position is based on the following:

(a) The amount of cabling in this area is substantially reduced over current designs.

(b) The control room is continuously manned so that the presence of a fire will be quickly detected.

(c) The types of cables located in the raised floor area smolder for a long time and are usually self extinguishing.

(d) There has never been a fire in the operating plant that has required the evacuation of the control room.

(e) In the unlikely event that the control room were to require evacuation the Remote Shutdown Panels provide the necessary controls to bring the plant to cold shutdown.

The cabling that will be located in the raised floor area will be one of three types:

(a) Fiber Optic Cables

(b) Control and Signal Cables

(c) Low Voltage Power Cables (<480 Volts)

Divisional separation of these cables will maintained per requirements of IEEE 384, Reg Guide 1.75, and GDC 17 (SSAR 8.3.3.1). For the raised floor area this effectively means that divisional cable trays will be separated by a minimum of 0.91 m horizontal or will be enclosed with at least 3 cm clearance. Furthermore, all low voltage power cables will be contained in flexible or rigid

conduit in the raised floor areas. Cable contained in conduit or enclosed trays are not considered to contribute to the combustible loading for the room.

The divisional panels are physically separated as much as practical and located above the divisional electrical equipment rooms. The cabling from the divisional electrical equipment rooms will be routed to the Safety System Logic Control (SSLC) cabinets with Divisions I and III on one side of the operator area and Divisions II and IV located on the opposite side of the operator area.

There is a suspended ceiling but only cables associated with lighting and the fire alarm system are routed above the false ceiling. The cables are in conduit.

Paper within the control room complex is required to be stored in approved containers (file cabinets, cabinets, waste baskets) except when in use.

9A.4.2.5 Floor Five El 12300 mm

9A.4.2.5.1 Control Room HVAC "B" Exhaust Duct Chase (Rm No. 522)

(1) Fire Area—FC4220

(2) Equipment: See Table 9A.6-3

Safety-Related	Provides Core Cooling
Yes, D2	No

(3) Radioactive Material Present—None.

(4) Qualification of Fire Barriers—Rm No. 522 is defined as a vertical section of HVAC chase extending from the ceiling of the control room, formed by the floor located at the 12300 mm elevation, to the floor of Rm No. 629 located at the 17150 mm elevation. All four walls are designated as fire barriers and are of three hour fire-resistive concrete construction. Access to Rm No. 522 from the 12300 mm level is provided by a three hour, fire-resistive removable panel.

(5) Combustibles Present—(NCLL Applies)

Type	Fire Loading Total Heat of Combustion (MJ)
Cable in trays	727 MJ/m^2 NCLL (727 MJ/m^2 maximum average) applies

(6) Detection Provided—Class A Supervised POC detection system in the room and manual pull alarm station at 1.62-J.60.

(7) Suppression Available:

Type	Location/Actuation
Standpipe and hose reel	4.00-K.95 & 1.6 - J.5/Manual
ABC hand extinguishers	4.0 - K.95 & 1.6 - J.5/Manual

(8) Fire Protection Design Criteria Employed:

(a) The function is located in a fire area which is separate from fire areas providing alternate means of performing the safety or shutdown function.

(b) Fire detection and suppression capability is provided and accessible.

(c) Fire stops are provided for cable tray and piping penetrations through designated barriers.

(9) Consequences of Fire—Postulated fire assumes loss of the function. Alternate means is provided by control room HVAC "C".

Smoke control is by the normal HVAC System functioning in the smoke control mode. Refer to 9.5.1.1.6 for additional information.

(10) Consequences of Fire Suppression—Suppression extinguishes the fire. Refer to Section 3.4, "Water Level (Flood) Design," for the drain system.

(11) Design Criteria Used for Protection Against Inadvertent Operation, Careless Operation or Rupture of the Suppression System:

(a) Refer to Section 3.4, "Water Level (Flood) Design," for the drain system.

(b) Location of the manual suppression system in an area external to the room containing the safety-related equipment

(12) Fire Containment or Inhibiting Methods Employed:

(a) The functions are located in a separate fire-resistive enclosure.

(b) The means of fire detection, suppression and alarming are provided and accessible.

(c) Fire stops are provided for cable tray and piping penetrations through rated fire barriers.

(13) Remarks—Quantities of cable may be so small that they will be in conduit rather than cable tray.

9A.4.2.5.2 HVAC "A" Supply (Rm Nos. 511, 512 and 513)

(1) Fire Area—FC1110

(2) Equipment: See Table 9A.6-3

Safety-Related	Provides Core Cooling
Yes, D1 See Remarks	Yes, D1

(3) Radioactive Material Present—None.

(4) Qualification of Fire Barriers—The exterior walls of the space consisting of Rm Nos. 511,512, 513 are common to adjacent fire areas FC1310 and FC5110 on the 12300 mm level. Therefore all space exterior walls are designated as fire barriers and are of three hour fire-resistive concrete construction. The ceiling is common to fire area FC1110 above and is not a fire barrier. The floor is common to fire area FC4910 below and is of three hour fire-resistive concrete construction. Access to this area is from Rm No. 593 through a three hour fire-resistive door. Access to Rm No. 512 and 513 from Rm No. 511 is via removable panels.

(5) Combustibles Present—(NCLL Applies))

Type	Fire Loading Total Heat of Combustion (MJ)
Cable in trays Bag filters	727 MJ/m^2 NCLL (727 MJ/m^2 maximum average) applies

(6) Detection Provided—Class A Supervised POC detection system in the room and manual pull alarm station at 6.50-J75.

(7) Suppression Available:

Type	Location/Actuation
Standpipe and hose reel	6.60 - J.75 & 4.0 - J.2/Manual
ABC hand extinguishers	6.50-J.75 and 5.45-J.50/Manual

(8) Fire Protection Design Criteria Employed:

(a) The function is located in a fire area which is separate from fire areas providing alternate means of performing the safety or shutdown function.

(b) Fire detection and suppression capability is provided and accessible.

(c) Fire stops are provided for cable tray and piping penetrations through rated fire barriers.

(9) Consequences of Fire—Postulated fire assumes loss of the function: Therefore it is assumed that the loss of HVAC Supply “A” would necessitate shutting down the RCW “A” System with the consequential loss of division 1, however, RCW divisions “B” and “C” would remain operational.

Smoke control is by the normal HVAC System functioning in the smoke control mode. Refer to 9.5.1.1.6 for additional information.

(10) Consequences of Fire Suppression—Suppression extinguishes the fire. Refer to Section 3.4, "Water Level (Flood) Design," for the drain system.

(11) Design Criteria Used for Protection Against Inadvertent Operation, Careless Operation or Rupture of the Suppression System:

(a) Refer to Section 3.4, "Water Level (Flood) Design," for the drain system.

(b) Provision of raised supports for the equipment

(c) Location of manual suppression system in an area external to the room containing the safety-related equipment

(d) ANSI B31.1 standpipe (rupture unlikely)

(12) Fire Containment or Inhibiting Methods Employed:

(a) The functions are located in a separate fire-resistive enclosure.

(b) The means of detection, suppression and alarming are provided and accessible.

(c) Fire stops are provided for cable tray and piping penetrations through rated fire barriers.

(13) Remarks—This equipment is required to function to support equipment required for remote shutdown and therefore must be and is in a fire area separate from the control room.

9A.4.2.5.3 HVAC "C" Supply (Rm Nos. 531, 532 and 533)

(1) Fire Area—FC1310

(2) Equipment: See Table 9A.6-3

Safety-Related	Provides Core Cooling
Yes, D3	Yes, D3

(3) Radioactive Material Present—None.

(4) Qualification of Fire Barriers—The exterior walls of the space consisting of Rm Nos. 531, 532 and 533 are common to adjacent fire areas FC4910 and FC5110 on the 12300 mm level. All walls are designated as fire barriers and are of three hour fire rated concrete construction. The portion of the ceiling common to fire area FC4220 above is of three hour fire-resistive concrete construction. The remainder of ceiling is common to fire area FC1310 above and is not a fire barrier. Access to this area is from Rm No. 593 via three hour fire rated doors. Access to Rm Nos. 532 and 533 from Rm No. 531 is via removable panels.

(5) Combustibles Present—(NCLL Applies)

Type	Fire Loading Total Heat of Combustion (MJ)
Cable in trays Bag filters	727 MJ/m^2 NCLL (727 MJ/m^2 maximum average) applies

(6) Detection Provided—Class A Supervised POC detection system in the room and manual pull alarm station at 6.50-J.75.

(7) Suppression Available:

Type	Location/Actuation
Standpipe and hose reel	6.60 - J.75 & 4.0 - J.1/Manual
ABC hand extinguishers	6.50-J.75 and 5.45-J.50/Manual

(8) Fire Protection Design Criteria Employed:

(a) The function is located in a fire area which is separate from fire areas providing alternate means of performing the safety or shutdown function.

(b) Fire detection and suppression capability is provided and accessible.

(c) Fire stops are provided for cable tray and piping penetrations through designated fire barriers.

(9) Consequences of Fire—Postulated fire assumes loss of the function: Therefore it is assumed that the loss of HVAC Supply “C” would necessitate shutting down the RCW “C” System and the consequential loss of division 3, however, RCW divisions “A” and “B” would remain operational.

Smoke control is by the normal HVAC System functioning in the smoke control mode. Refer to 9.5.1.1.6 for additional information.

(10) Consequences of Fire Suppression—Suppression extinguishes the fire. Refer to Section 3.4, "Water Level (Flood) Design," for the drain system.

(11) Design Criteria Used for Protection Against Inadvertent Operation, Careless Operation or Rupture of the Suppression System:

(a) Refer to Section 3.4, "Water Level (Flood) Design," for the drain system.

(b) Provision of raised supports for the equipment

(c) Location of manual suppression system in an area external to the room containing the safety-related equipment

(d) ANSI B31.1 standpipe (rupture unlikely)

(12) Fire Containment or Inhibiting Methods Employed:

(a) The functions are located in a separate fire-resistive enclosure.

(b) The means of detection, suppression and alarming are provided and accessible.

(c) Fire stops are provided for cable tray and piping penetrations through rated fire barriers.

(13) Remarks—None.

9A.4.2.5.4 Stairwell Landing (Rm No. 505)

(1) Fire Area—FC1310

(2) Equipment: See Table 9A.6-3

Safety-Related	Provides Core Cooling
No	No

(3) Radioactive Material Present—None.

(4) Qualification of Fire Barriers—The stairwell landing is a continuation of the division 3 fire area from below and is a different division than surrounding Rm Nos. 506 and 593, therefore the three internal walls are fire barriers. The fourth wall is a building exterior wall and a fire barrier. Therefore all stairwell landing walls on the 12300 mm level are of three hour fire-resistive concrete construction. Access to the stairwell and elevator (Rm Nos. 336 and 337) is provided by the landing. A portion of the ceiling is common to fire area FC4310 above and is of three hour fire-resistive concrete construction. The remainder of the ceiling is common to fire area FC1310. The floor is common to fire area FC4310 below and is of three hour fire-resistive concrete construction. Access between Rm No. 593 and the stairwell is provided via a three hour fire-resistive door.

(5) Combustibles Present—(NCLL Applies)

Type	Fire Loading Total Heat of Combustion (MJ)
None	727 MJ/m^2 NCLL (727 MJ/m^2 maximum average) applies

(6) Detection Provided—Class A Supervised POC detection system in the room and manual pull alarm station at 6.50-J.75.

(7) Suppression Available:

Type	Location/Actuation
Standpipe and hose reel	6.60-J.75/Manual
ABC hand extinguishers	6.70-K.55 and 6.50-J.75/Manual

(8) Fire Protection Design Criteria Employed:

(a) The function is located in the fire-resistive enclosure.

(b) Fire detection and suppression capability is provided and accessible.

(9) Consequences of Fire—Postulated fire assumes loss of the function. An alternate means of access and egress is provided by an up/down stairwell which opens into Rm No. 521. The route to this stairwell is via passageway Rm No. 593.

Smoke control is by the normal HVAC System functioning in the smoke control mode. Refer to 9.5.1.1.6 for additional information.

(10) Consequences of Fire Suppression—Suppression extinguishes the fire. Refer to Section 3.4, "Water Level (Flood) Design," for the drain system.

(11) Design Criteria Used for Protection Against Inadvertent Operation, Careless Operation or Rupture of the Suppression System:

(a) Refer to Section 3.4, "Water Level (Flood) Design," for the drain system.

(b) Location of manual suppression system in an area external to the stairwell

(c) ANSI B31.1 standpipe (rupture unlikely)

(12) Fire Containment or Inhibiting Methods Employed:

(a) The functions are located in a separate fire-resistive enclosure.

(b) The means of detection, suppression and alarming are provided and accessible.

(c) Fire stops are provided for cable tray and piping penetrations through rated fire barriers.

(13) Remarks—None.

9A.4.2.5.5 Chiller Unit "C," (Rm No. 534)

(1) Fire Area—FC1310

(2) Equipment: See Table 9A.6-3

Safety-Related	Provides Core Cooling
Yes, D3 See Remarks.	Yes, D3

(3) Radioactive Material Present—None.

(4) Qualification of Fire Barriers—Two of the walls of Rm No. 534 are building exterior walls and are designated as fire barriers and are of three hour fire-resistive concrete construction. The other two walls are common to adjacent fire area FC1310 and are not fire rated. The ceiling is common to fire areas FC4310 and FC1110 above and is of three hour fire-resistive concrete construction. The floor is common to fire area FC4910 below and is also of three hour fire-resistive concrete construction. Access to this area is from Rm No. 593 via a three hour fire rated door.

(5) Combustibles Present—(NCLL Applies)

Type	Fire Loading Total Heat of Combustion (MJ)
Cable in trays Small amounts of lubricants	727 MJ/m^2 NCLL (727 MJ/m^2 maximum average) applies

(6) Detection Provided—Class A Supervised POC detection system in the room and manual pull alarm station at 6.50-J.75.

(7) Suppression Available:

Type	Location/Actuation
Standpipe and hose reel	6.60-J.75 and 4.00-J.07/Manual
ABC hand extinguishers	6.50-J.75 and 5.45-J.50/Manual

(8) Fire Protection Design Criteria Employed:

(a) The function is located in a fire area which is separate from fire areas providing alternate means of performing the safety and shutdown functions.

(b) Fire detection and suppression capability is provided and accessible.

(c) Fire stops are provided for cable tray and piping penetrations through designated fire barriers.

(9) Consequences of Fire—Postulated fire assumes loss of the function: Therefore it is assumed that the loss of Chiller Unit “C” would necessitate shutting down the RCW “C” System and control room (CR) HVAC “C” system with the consequential loss of division 3. RCW divisions “A” and “B” and the CR HVAC “B” would remain operational. Smoke control is by the normal HVAC System functioning in the smoke control mode. Refer to 9.5.1.1.6 for additional information.

(10) Consequences of Fire Suppression—Suppression extinguishes the fire. Refer to Section 3.4, "Water Level (Flood) Design," for the drain system.

(11) Design Criteria Used for Protection Against Inadvertent Operation, Careless Operation or Rupture of the Suppression System:

(a) Refer to Section 3.4, "Water Level (Flood) Design," for the drain system.

(b) Provision of raised supports for the equipment

(c) Location of manual suppression system in an area external to the room containing the safety-related equipment

(d) ANSI B31.1 standpipe (rupture unlikely)

(12) Fire Containment or Inhibiting Methods Employed:

(a) The functions are located in a separate fire-resistive enclosure.

(b) The means of detection, suppression and alarming are provided and accessible.

(c) Fire stops are provided for cable tray and piping penetrations through rated fire barriers.

(13) Remarks—Chiller Unit “C” provides cooling for the control room HVAC “C” System which serves the safety-related multi-divisional equipment in the control room and RCW “C”.

9A.4.2.5.6 Recirc Internal Pump MG Sets and Control Panels (Rm Nos. 501,502,503 and 504)

(1) Fire Area—FC5010

(2) Equipment: See Table 9A.6-3

Safety-Related	Provides Core Cooling
No	No

(3) Radioactive Material Present—None.

(4) Qualification of Fire Barriers—The MG set and control room spaces (consisting of Rm Nos. 501, 502, 503 and 504) are in a common fire area. The walls enclosing these spaces are common to adjacent fire areas FC4220 and FC4310 and are designated as fire barriers. Therefore they are of three hour fire-resistive concrete construction. The ceiling is common to fire areas FC4910, FC6210 and FC1210 above and is of three hour fire-resistive concrete construction. The floor is common the fire area FC4910 below and is also of three hour fire-resistive concrete construction. Access to Rm Nos. 501 and 503 is provided from Rm No. 521 via three hour fire rated doors. Rm Nos. 502 and 504 are accessible from Rm Nos. 501 and 503, respectively.

(5) Combustibles Present—(NCLL Applies)

Type	Fire Loading Total Heat of Combustion (MJ)
Lubricating oil internal to the MG Sets Cable in trays Electrical Panels	727 MJ/m^2 NCLL (727 MJ/m^2 maximum average) applies

(6) Detection Provided—Class A Supervised POC detection system in the room and manual pull alarm station at 1.62-J.60.

(7) Suppression Available:

Type	Location/Actuation
Standpipe and hose reel	1.62-J.53/Manual
ABC hand extinguishers	1.62-J.60, 2.02-J.65 and 2.02-K.35/Manual

(8) Fire Protection Design Criteria Employed:

(a) The function is located in the fire-resistive enclosure.

(b) Fire detection and suppression capability is provided and accessible.

(c) Fire stops are provided for cable tray and piping penetrations through designated fire barriers.

(9) Consequences of Fire—Postulated fire assumes loss of the function. Loss of the RIP MG Sets will either necessitate a manual scram or initiate an automatic scram. Room cooling is provided by coolers which receive chilled water from the turbine building chilled water system. Room purge (supply and exhaust) is provided by the division 2 HVAC which would be switched to the smoke removal mode upon detection of smoke. The combustion products would then be exhausted directly to the atmosphere without being returned to the division 2 areas. Smoke detection is provided in the branch exhaust duct for the non-safety-related rooms in this fire area (Rm Nos. 501, 502, 503, and 504). This is an aid to determining that a fire is in the non-safety-related rooms and not in the division 2 rooms served by the common purge system. Refer to Subsection 9.5.1.1.6 for additional information.

(10) Consequences of Fire Suppression—Suppression extinguishes the fire. Refer to Section 3.4, "Water Level (Flood) Design," for the drain system.

(11) Design Criteria Used for Protection Against Inadvertent Operation, Careless Operation or Rupture of the Suppression System:

(a) Refer to Section 3.4, "Water Level (Flood) Design," for the drain system.

(b) Provision of raised supports for the equipment

(c) Location of manual suppression system in an area external to the room containing the safety-related equipment

(d) ANSI B31.1 standpipe (rupture unlikely)

(12) Fire Containment or Inhibiting Methods Employed:

(a) The functions are located in a separate fire-resistive enclosure.

(b) The means of detection, suppression and alarming are provided and accessible.

(c) Fire stops are provided for cable tray and piping penetrations through rated fire barriers.

(13) Remarks—Room exhaust and makeup air capability is provided by the division 2 control building HVAC System.

9A.4.2.5.7 Computer Room (Rm No. 591)

(1) Fire Area—FC4910

(2) Equipment: See Table 9A.6-3

Safety-Related	Provides Core Cooling
No	No

(3) Radioactive Material Present—None.

(4) Qualification of Fire Barriers—The computer room has three walls which are common to adjacent fire areas FC1110, FC1210, FC1310, FC5010 and FC5110. These walls are designated as fire barriers and are of three hour fire-resistive concrete construction. The remaining walls are internal to fire area FC4910 and are not fire barriers. The floor of Rm No. 591 is common to FC4910 below and is not a fire barrier. The ceiling of Rm No. 591 is common to the steam tunnel above and is of three hour fire-resistive concrete construction. Access to the computer room is provided from Rm No. 592.

(5) Combustibles Present—(NCLL Applies)

Type	Fire Loading Total Heat of Combustion (MJ)
Cable in trays Paper (See paragraph 13 remarks) Electrical panels	727 MJ/m^2 NCLL (727 MJ/m^2 maximum average) applies

(6) Detection Provided—Class A Supervised POC detection system in the room and manual pull alarm station at 4.05-J.07.

(7) Suppression Available:

Type	Location/Actuation
Standpipe and hose reel	4.00-J.07/Manual
ABC hand extinguishers	4.05-J.07, 3.92-J.65 and 3.92-K.35/Manual

(8) Fire Protection Design Criteria Employed:

(a) The function is located in the fire-resistive enclosure.

(b) Fire detection and suppression capability is provided and accessible.

(c) Fire stops are provided for cable tray penetrations through designated fire barriers.

(9) Consequences of Fire—Postulated fire assumes loss of the function. Therefore, it is assumed that the computer room and control room would not remain habitable and/or functional (both are in FC4910). Equipment, not in fire area FC4910, on all elevations, would remain operational. Shutdown and core cooling would be accomplished from the remote shutdown rooms in the reactor building.

Smoke control is by the normal HVAC System functioning in the smoke control mode. Refer to 9.5.1.1.6 for additional information.

(10) Consequences of Fire Suppression—Suppression extinguishes the fire. Refer to Section 3.4, "Water Level (Flood) Design," for the drain system.

(11) Design Criteria Used for Protection Against Inadvertent Operation, Careless Operation or Rupture of the Suppression System:

(a) Refer to Section 3.4, "Water Level (Flood) Design," for the drain system.

(b) Provision of raised supports for the equipment

(c) Location of manual suppression system in an area external to the room

(d) ANSI B31.1 standpipe (rupture unlikely)

(12) Fire Containment or Inhibiting Methods Employed:

(a) The functions are located in a separate fire-resistive enclosure.

(b) The means of detection, suppression and alarming are provided and accessible.

(c) Fire stops are provided for cable tray and piping penetrations through rated fire barriers.

(13) Remarks—A computer floor is provided for routing of the power cables, a few hard wired cables and fiber optic cables from the cable chases. Conduit, flexible and rigid is used.

Paper in the computer room is required to be stored in approved containers (file cabinets, cabinets, waste baskets) except when in use.

9A.4.2.5.8 Passageway (Rm No. 521)

(1) Fire Area—FC1210

(2) Equipment: See Table 9A.6-3

Safety-Related	Provides Core Cooling
No	No

(3) Radioactive Material Present—None.

(4) Qualification of Fire Barriers—Rm No. 521 is a passageway which provides equipment and personnel access to the RIP MG Set rooms (FC5010) via three hour fire-resistive doors. The interior walls and building exterior walls of Rm No. 521 are designated as fire barriers and are of three hour fire-resistive concrete construction. Portion of the ceiling of Rm No. 521 is common to fire areas FC4220 and FC4310 above and is of three hour fire-resistive concrete construction. The remaining portion of the ceiling is not fire rated barrier. The floor is common to fire area FC4910 below and is also of three hour fire-resistive concrete construction. Access to Rm No. 521 from above and below is provided by a stairwell (Rm No.325) and from room 592 via a 3 h fire rated door.

(5) Combustibles Present—(NCLL Applies)

Type	Fire Loading Total Heat of Combustion (MJ)
Cable in trays	727 MJ/m^2 NCLL (727 MJ/m^2 maximum average) applies

(6) Detection Provided—Class A Supervised POC detection system in the room and manual pull alarm station at 1.62-J.60.

(7) Suppression Available:

Type	Location/Actuation
Standpipe and hose reel	1.62-J.53/Manual
ABC hand extinguishers	1.62-J.53/Manual

(8) Fire Protection Design Criteria Employed:

(a) The function is located in the fire-resistive enclosure.

(b) Fire detection and suppression capability is provided and accessible.

(c) Fire stops are provided for cable tray and piping penetrations through designated fire barriers.

(9) Consequences of Fire—Postulated fire assumes loss of the RCW “B” function and the consequential loss of division 2. RCW Systems “A” and “C” would remain operational. Alternate means of access and egress from Rm No. 521 is provided by the stairwell defined as Rm No. 336 which is accessible from Rm No. 521 via passageway Rm Nos. 592 and 593.

Smoke control is by the normal HVAC System functioning in the smoke control mode. Refer to 9.5.1.1.6 for additional information.

(10) Consequences of Fire Suppression—Suppression extinguishes the fire. Refer to Section 3.4, "Water Level (Flood) Design," for the drain system.

(11) Design Criteria Used for Protection Against Inadvertent Operation, Careless Operation or Rupture of the Suppression System:

(a) Refer to Section 3.4, "Water Level (Flood) Design," for the drain system.

(b) ANSI B31.1 standpipe (rupture unlikely)

(12) Fire Containment or Inhibiting Methods Employed:

(a) The functions are located in a fire-resistive enclosure.

(b) The means of detection, suppression and alarming are provided and accessible.

(c) Fire stops are provided for cable tray and piping penetrations through rated fire barriers.

(13) Remarks—None.

9A.4.2.5.9 Not Used

9A.4.2.5.10 Passageway (Rm No. 592)

(1) Fire Area—FC4910

(2) Equipment: See Table 9A.6-3

Safety-Related	Provides Core Cooling
Yes, D2	Yes, D2

(3) Radioactive Material Present—None.

(4) Qualification of Fire Barriers—This passageway provides access to the computer room (Rm No. 591). The internal wall is common to Rm No. 591 (FC4910) and is not a fire barrier. The building exterior wall is a designated fire barrier and is of three hour fire-resistive concrete construction. Each end of the passageway has a 3 h fire barrier door opening into a room fire area FC1210, and FC1310. The floor is common to fire area FC4910 below and is not a fire barrier. The ceiling is common to the steam tunnel and is of three hour fire-resistive concrete construction.

(5) Combustibles Present—(NCLL Applies)

Type	Fire Loading Total Heat of Combustion (MJ)
Cable in trays	727 MJ/m^2 NCLL (727 MJ/m^2 maximum average) applies

(6) Detection Provided—Class A Supervised POC detection system in the room and manual pull alarm station at 4.05-J.07.

(7) Suppression Available:

Type	Location/Actuation
Standpipe and hose reel	4.00-J.07/Manual
ABC hand extinguishers	4.05-J.07/Manual

(8) Fire Protection Design Criteria Employed:

(a) The function is located in a separate fire-resistive enclosure.

(b) Fire detection and suppression capability is provided and accessible.

(c) Fire stops are provided for cable tray and piping penetrations through designated fire barriers.

(9) Consequences of Fire—Postulated fire assumes loss of the function: Therefore it is assumed that the computer room and control rooms (also in FC4910) would not remain habitable and/or functional. Equipment (not in FC4910) on all elevations would remain operational. Shutdown and core cooling would be accomplished from the Remote Shutdown Rooms in the Reactor Building (See para. 13 remarks).

Smoke control is by the normal HVAC System functioning in the smoke control mode. Refer to 9.5.1.1.6 for additional information.

(10) Consequences of Fire Suppression—Suppression extinguishes the fire. Refer to Section 3.4, "Water Level (Flood) Design," for the drain system.

(11) Design Criteria Used for Protection Against Inadvertent Operation, Careless Operation or Rupture of the Suppression System:

(a) Refer to Section 3.4, "Water Level (Flood) Design," for the drain system.

(b) ANSI B31.1 standpipe (rupture unlikely)

(12) Fire Containment or Inhibiting Methods Employed:

(a) The functions are located in a fire-resistive enclosure.

(b) The means of detection, suppression and alarming are provided and accessible.

(c) Fire stops are provided for cable tray and piping penetrations through rated fire barriers.

(13) Remarks—Although it is assumed that the control room would become uninhabitable, it would most likely remain habitable if the HVAC System is placed in the smoke removal mode.

9A.4.2.5.11 Passageways (Rm No. 593)

(1) Fire Area—FC1310

(2) Equipment: See Table 9A.6-3

Safety-Related	Provides Core Cooling
Yes, D2	Yes, D2

(3) Radioactive Material Present—None.

(4) Qualification of Fire Barriers—These passageways provide access to chiller unit "C," HVAC supplies "A" and "C," stairwell landing Rm No. 505 and Rm No. 592. Passageway walls common to HVAC supply "A" (Rm 511), HVAC supply "C" (Rm No. 531), chiller unit "C (Rm No. 534), stairwell landing (Rm No. 505), Rm No. 506 and exterior walls of the control building are designated as fire barriers and are of three hour fire-resistive concrete construction. The wall common to the computer room (FC4910) and the door common to Rm No. 592 is 3 h fire barrier. The portion of ceiling common to fire area FC1310 above, is not a fire barrier. Those portions of ceiling common to fire areas FC1110, FC4220 and FC4310 above are of three hour fire-resistive concrete construction. The floor is common to fire area FC4910 below and is not a fire barrier.

(5) Combustibles Present—(NCLL Applies)

Type	Fire Loading Total Heat of Combustion (MJ)
Cable in trays	727 MJ/m^2 NCLL (727 MJ/m^2 maximum average) applies

(6) Detection Provided—Class A Supervised POC detection system in the room and manual pull alarm station at 6.50-J.75.

(7) Suppression Available:

Type	Location/Actuation
Standpipe and hose reel	6.60-J.75/Manual
ABC hand extinguishers	6.50-J.75 and 5.45-J.50/Manual

(8) Fire Protection Design Criteria Employed:

(a) The function is located in a fire-resistive enclosure.

(b) Fire detection and suppression capability is provided and accessible.

(c) Fire stops are provided for cable tray and piping penetrations through designated fire barriers.

(9) Consequences of Fire—Postulated fire assumes loss of the function: Equipment (not in FC1310) on all elevations would remain operational. HVAC A and B remain operational and will not be affected by the fire.

Smoke control is by the normal HVAC System functioning in the smoke control mode. Refer to 9.5.1.1.6 for additional information.

(10) Consequences of Fire Suppression—Suppression extinguishes the fire. Refer to Section 3.4, "Water Level (Flood) Design," for the drain system.

(11) Design Criteria Used for Protection Against Inadvertent Operation, Careless Operation or Rupture of the Suppression System:

(a) Refer to Section 3.4, "Water Level (Flood) Design," for the drain system.

(b) ANSI B31.1 standpipe (rupture unlikely)

(12) Fire Containment or Inhibiting Methods Employed:

(a) The functions are located in a fire-resistive enclosure.

(b) The means of detection, suppression and alarming are provided and accessible.

(c) Fire stops are provided for cable tray and piping penetrations through rated fire barriers.

(13) Remarks—None.

9A.4.2.5.12 Control Room HVAC "C," Exhaust Duct Chase (Rm No. 595)

(1) Fire Area—FC4310

(2) Equipment: See Table 9A.6-3

Safety-Related	Provides Core Cooling
Yes, D3	No, See Remarks.

(3) Radioactive Material Present—None.

(4) Qualification of Fire Barriers—Rm No. 595 is defined as a vertical section of HVAC chase extending from the ceiling of the control room, formed by the floor at the 12300 mm elevation, to the 17150 mm elevation. Walls common to Rm No. 512 (FC1110), Rm No. 532 (FC1310) Rm No. 593 (FC1310) and Rm No. 506 (FC5110) are designated fire barriers and are of three hour fire-resistive concrete construction. Access to Rm No. 595 is provided by a removable panel.

(5) Combustibles Present—(NCLL Applies)

Type	Fire Loading Total Heat of Combustion (MJ)
None	727 MJ/m^2 NCLL (727 MJ/m^2 maximum average) applies

(6) Detection Provided—Class A Supervised POC detection system in the room and manual pull alarm station at 6.50-J.75.

(7) Suppression Available:

Type	Location/Actuation
Standpipe and hose reel	4.0 - J.1 & 6.60-J.67 on the 17150 level/Manual
ABC hand extinguishers	4.0 - J.1 & 6.60 - J.67/ Manual

(8) Fire Protection Design Criteria Employed:

(a) The function is located in a fire-resistive enclosure.

(b) Fire detection and suppression capability is provided and accessible.

(9) Consequences of Fire—Postulated fire assumes loss of the function. alternate means is provided by control room HVAC "B".

Smoke control is by the normal HVAC System functioning in the smoke control mode. Refer to 9.5.1.1.6 for additional information.

(10) Consequences of Fire Suppression—Suppression extinguishes the fire. Refer to Section 3.4, "Water Level (Flood) Design," for the drain system.

(11) Design Criteria Used for Protection Against Inadvertent Operation, Careless Operation or Rupture of the Suppression System.

(a) Location of the manual suppression system in an area external to the room containing the safety-related equipment

(b) ANSI B31.1 standpipe (rupture unlikely)

(12) Fire Containment or Inhibiting Methods Employed:

(a) The functions are located in a separate fire-resistive enclosure.

(b) The means of fire detection, suppression and alarming are provided and accessible.

(c) Fire stops are provided for cable tray and piping penetrations through rated fire barriers.

(13) Remarks—Quantities of cable may be so small that they will be in conduit rather than cable tray.

9A.4.2.5.13 Passageway (Rm No. 506)

(1) Fire Area—FC5110

(2) Equipment: See Table 9A.6-3

Safety-Related	Provides Core Cooling
No	No

(3) Radioactive Material Present—None.

(4) Qualification of Fire Barriers—All walls of this passageway are designated fire barriers and are of three hour fire-resistive concrete construction. The ceiling is common to fire areas FC4310, FC1210, FC1110, FC1310, FC4220 and the steam tunnel above and is of three hour fire-resistive concrete construction. The floor is common to fire area FC4910 below and is also of three hour fire-

resistive concrete construction. This corridor provides controlled access between the reactor and service buildings. It serves no purpose for the control building and is therefore separated from the remainder of the control building by fire barriers.

(5) Combustibles Present—(NCLL Applies)

Type	Fire Loading Total Heat of Combustion (MJ)
None	727 MJ/m^2 NCLL (727 MJ/m^2 maximum average) applies

(6) Detection Provided—Class A Supervised POC detection system in the fire area and manual pull alarm station at 4.00-K.95

(7) Suppression Available:

Type	Location/Actuation
Standpipe and hose reel	4.00-K.95/Manual

(8) Fire Protection Design Criteria Employed:

(a) The function is located in a separate fire-resistive enclosure.

(b) Fire detection capability is provided. Fire suppression capability is provided. A backup manual hose is provided from the service building.

(c) Fire stops are provided for cable tray and piping penetrations through designated fire barriers.

(9) Consequences of Fire—All systems would continue to function normally. Access between the service building and reactor building would not be possible while a fire was in progress.

Smoke control is by the normal HVAC System functioning in the smoke control mode. Refer to 9.5.1.1.6 for additional information.

(10) Consequences of Fire Suppression—Suppression extinguishes the fire. Refer to Section 3.4, "Water Level (Flood) Design," for the drain system.

(11) Design Criteria Used for Protection Against Inadvertent Operation, Careless Operation or Rupture of the Suppression System:

(a) Refer to Section 3.4, "Water Level (Flood) Design," for the drain system.

(b) ANSI B31.1 standpipe (rupture unlikely)

(12) Fire Containment or Inhibiting Methods Employed:

(a) The functions are located in a fire-resistive enclosure.

(b) The means of detection, suppression and alarming are provided and accessible.

(c) Fire stops are provided for cable tray and piping penetrations through rated fire barriers.

(13) Remarks—None.

9A.4.2.6 Floor Six El 17150 mm

9A.4.2.6.1 Control Room HVAC Supply "B" (Rm No. 621)

(1) Fire Area—FC4220

(2) Equipment: See Table 9A.6-3

Safety-Related	Provides Core Cooling
Yes, D2	Yes, See Remarks.

(3) Radioactive Material Present—None.

(4) Qualification of Fire Barriers—The building exterior walls and the wall common with Rm No. 623 which is in a different fire area (FC 1210) are designated as fire barriers and are of three hour fire-resistive concrete construction. The supply duct through the building exterior wall in Rm No. 621 does not have a fire damper. See SSAR Subsection 9.5.1.1.6 for a discussion and justification of this design feature. The remaining walls are internal to fire area FC4220 and are not fire barriers. The ceiling is a building exterior wall and is of three hour fire-resistive concrete construction. The floor is common to fire areas FC1210 and FC5010 below and is also of three hour fire-resistive concrete construction. Access to Rm No. 621 is provided from Rm No. 622.

(5) Combustibles Present—(NCLL Applies)

Type	Fire Loading Total Heat of Combustion (MJ)
Cable in trays Bag filters	727 MJ/m^2 NCLL (727 MJ/m^2 maximum average) applies

(6) Detection Provided—Class A Supervised POC detection system in the room and manual pull alarm station at 1.42-J.67.

(7) Suppression Available:

Type	Location/Actuation
Standpipe and hose reel	1.30 - K.52 & 1.37-J.67/Manual
ABC hand extinguishers	1.42-J.67 and 1.30-K.55/Manual

(8) Fire Protection Design Criteria Employed:

(a) The function is located in a fire area which is separate from fire areas providing alternate means of performing the safety or shutdown function.

(b) Fire detection and suppression capability is provided and accessible.

(c) Fire stops are provided for cable tray and piping penetrations through designated fire barriers.

(9) Consequences of Fire—Postulated fire assumes loss of the CR HVAC supply “B” function. Alternate means is provided by CRHVAC "C" supply.

Smoke control is by the normal HVAC System functioning in the smoke control mode. Refer to 9.5.1.1.6 for additional information.

(10) Consequences of Fire Suppression—Suppression extinguishes the fire. Refer to Section 3.4, "Water Level (Flood) Design," for the drain system.

(11) Design Criteria Used for Protection Against Inadvertent Operation, Careless Operation or Rupture of the Suppression System:

(a) Refer to Section 3.4, "Water Level (Flood) Design," for the drain system.

(b) Provision of raised supports for the equipment

(c) Location of manual suppression system in an area external to the room containing the safety-related equipment

(d) ANSI B31.1 standpipe (rupture unlikely)

(12) Fire Containment or Inhibiting Methods Employed:

(a) The functions are located in a separate fire-resistive enclosure.

(b) The means of detection, suppression and alarming are provided and accessible.

(c) Fire stops are provided for cable tray and piping penetrations through rated fire barriers.

(13) Remarks—safety-related cooling for multiple divisional equipment is provided by the equipment in this room which is associated with division 2 power.

9A.4.2.6.2 Passageway and Room (Rm No. 622 and 662)

(1) Fire Area—FC4220

(2) Equipment: See Table 9A.6-3

Safety-Related	Provides Core Cooling
Yes, D2	Yes, D2 See remarks.

(3) Radioactive Material Present—None.

(4) Qualification of Fire Barriers—Passageway Rm No. 622 provides access to CR HVAC supply “B” (Rm No. 621) and Rm No. 662 via non fire barrier doors. The building exterior walls and the walls common with Rm Nos. 623, 624, 661 and 325, which are in a different fire area (FC1210) than Rm No. 622 and 662, are designated as fire barriers and therefore are of three hour fire-resistive concrete construction. Interior walls of Rm No. 622 that are common to Rm No. 621 are internal to fire area FC4220 and are not fire barriers. The ceiling of Rm Nos. 622 and 662 is a building exterior wall and is of three hour fire-resistive concrete construction. Access and egress from Rm No. 622 is via the stairwell (Rm No. 325). The floor of Rm Nos. 622 and 662 is common to fire areas FC1210, FC5110, and FC5010 below and is of three hour fire-resistive concrete construction.

(5) Combustibles Present—(NCLL Applies)

Type	Fire Loading Total Heat of Combustion (MJ)
Cable in tray	727 MJ/m^2 NCLL (727 MJ/m^2 maximum average) applies

(6) Detection Provided—Class A Supervised POC detection system in the fire area and manual pull alarm station at 1.42-J.67.

(7) Suppression Available:

Type	Location/Actuation
Standpipe and hose reel	1.37-J.67/Manual
ABC Hand Extinguishers	1.42-J.67 and 1.30-K.55/Manual

(8) Fire Protection Design Criteria Employed:

(a) The function is located in a fire area which is separate from fire areas providing alternate means of performing the safety or shutdown function.

(b) Fire detection and suppression capability is provided and accessible.

(c) Fire stops are provided for cable trays and piping penetrations through designated fire barriers.

(9) Consequences of Fire—Postulated fire assumes loss of the function. Even though access to the rooms 623, 624, 625, 629, and 325 are not possible, the equipment in these rooms are functional (they are in different fire area). Alternate means is provided by CRHVAC "C".

(10) Consequences of Fire Suppression—Suppression extinguishes the fire. Refer to Section 3.4, "Water Level (Flood) Design," for the drain system.

(11) Design Criteria Used for Protection Against Inadvertent Operation, Careless Operation or Rupture of the Suppression System:

(a) Refer to Section 3.4, "Water Level (Flood) Design," for the drain system.

(b) ANSI B31.1 standpipe (rupture unlikely)

(12) Fire Containment or Inhibiting Methods Employed:

(a) The functions are located in a fire-resistive enclosure.

(b) The means of detection, suppression and alarming are provided and accessible.

(c) Fire stops are provided for cable tray and piping penetrations through rated fire barriers.

(13) Remarks—safety-related cooling for multiple divisions is provided by redundant systems. Equipment on this level in this fire area provides one division of cooling for the multi-divisional control room.

9A.4.2.6.3 Chiller Unit "B" (Rm No.623)

(1) Fire Area—FC1210

(2) Equipment: See Table 9A.6-3

Safety-Related	Provides Core Cooling
Yes, D2	Yes, D2 See remarks.

(3) Radioactive Material Present—None.

(4) Qualification of Fire Barriers—One wall of Rm No. 623 is common to the steam tunnel and another is a building exterior wall. Both are designated as fire barriers and are of three hour fire-resistive concrete construction. The two interior walls common to adjacent fire area FC4220 (Rm Nos. 621, 622) and FC4310 (Rm 628) and are also of three hour fire-resistive concrete construction. The ceiling is a building exterior wall and is of three hour fire-resistive concrete construction. Portion of the floor is common to adjacent fire area FC5010 below and is of three hour fire-resistive concrete construction. Access to this room is provided from Rm No. 622 via a three hour fire-resistive door.

(5) Combustibles Present—(NCLL Applies)

Type	Fire Loading Total Heat of Combustion (MJ)
Cable in trays Small amounts of lubricants	727 MJ/m^2 NCLL (727 MJ/m^2 maximum average) applies

(6) Detection Provided:

Class A Supervised POC detection system in the fire area and manual pull alarm station at 1.42-J.67.

(7) Suppression Available:

Type	Location/Actuation
Standpipe and hose reel	1.37-J.67/Manual
ABC hand extinguishers	1.42-J.67 and 1.30-K.55/Manual

(8) Fire Protection Design Criteria Employed:

(a) The function is located in a fire area which is separate from fire areas providing alternate means of performing the safety or shutdown function.

(b) Fire detection and suppression capability is provided and accessible.

(c) Fire stops are provided for cable tray and piping penetrations through designated fire barriers.

(9) Consequences of Fire—Postulated fire assumes loss of the function: Therefore it is assumed that the loss of Chiller Unit “B” would necessitate shutting down the RCW “B” and CR HVAC “B” Systems with consequential loss of division 2. RCW divisions “A” and “C” and CR HVAC System “A” would remain operational.

Smoke control is by the normal HVAC System functioning in the smoke control mode. Refer to 9.5.1.1.6 for additional information.

(10) Consequences of Fire Suppression—Suppression extinguishes the fire. Refer to Section 3.4, "Water Level (Flood) Design," for the drain system.

(11) Design Criteria Used for Protection Against Inadvertent Operation, Careless Operation or Rupture of the Suppression System:

(a) Refer to Section 3.4, "Water Level (Flood) Design," for the drain system.

(b) Provision of raised supports for the equipment

(c) Location of manual suppression system in an area external to the room containing the safety-related equipment

(d) ANSI B31.1 standpipe (rupture unlikely)

(12) Fire Containment or Inhibiting Methods Employed:

(a) The functions are located in a separate fire-resistive enclosure.

(b) The means of detection, suppression and alarming are provided and accessible.

(c) Fire stops are provided for cable tray and piping penetrations through rated fire barriers.

(13) Remarks—The chiller unit "B" provides cooling for the control room HVAC "B" system which serves the safety-related multidivisional equipment in the control room and the RCW "B". This equipment is also required to function to support equipment required for remote shutdown and therefore is in a fire area separate from the control room and its HVAC equipment.

9A.4.2.6.4 HVAC "B" Supply and Exhaust (Rm Nos. 624, 625, 627, 661 and 664)

(1) Fire Area—FC1210

(2) Equipment: See Table 9A.6-3

Safety-Related	Provides Core Cooling
Yes, D2	Yes, See Remarks.

(3) Radioactive Material Present—None.

(4) Qualification of Fire Barriers—The building exterior wall, common to Rm Nos. 624 and 664, is a fire barrier and is of three hour fire-resistive concrete construction. The walls common to fire area FC4310 (Rm Nos. 622, 626, 628, 662 and 633) are fire barriers of three hour fire-resistive concrete construction. The wall of Rm No. 661 common to Rm No. 623 is a fire barrier. The internal walls of Rm Nos. 624, 625, 627, 661 and 664 are common to fire area FC1210 are not designated fire barriers. The supply duct through the building exterior wall in room 624 and the exhaust duct through the ceiling in Rm No. 661 do not have fire dampers. See Subsection 9.5.1.1.6 for a discussion and justification of this design feature. The ceiling is a building exterior wall and is of three hour fire-resistive concrete construction. Sections of the floor, common to fire areas FC5010 and FC5110 below, are also of three hour fire-resistive concrete construction. Access to the area is provided from Rm No. 622 via a three hour fire-resistive door. Access to Rm Nos. 625, 627 and 661 from room 624 is via removable panels.

(5) Combustibles Present—(NCLL Applies)

Type	Fire Loading Total Heat of Combustion (MJ)
Cable in trays Bag filters	727 MJ/m^2 NCLL (727 MJ/m^2 maximum average) applies

(6) Detection Provided—Class A Supervised POC detection system in the fire area and manual pull alarm station at 1.42-J.67.

(7) Suppression Available:

Type	Location/Actuation
Standpipe and hose reel	1.30 - K.52 & 1.37-J.67/Manual
ABC hand extinguishers	1.42-J.67 and 1.30-K.55/Manual

(8) Fire Protection Design Criteria Employed:

(a) The function is located in a fire area which is separate from fire areas providing alternate means of performing the safety or shutdown function.

(b) Fire detection and suppression capability is provided and accessible.

(c) Fire stops are provided for cable tray and piping penetrations though designated fire barriers.

(9) Consequences of Fire—Postulated fire assumes loss of the function and possibly the shutdown of RCW “B” and consequential loss of division 2 due to fire generated smoke and heat. HVAC Supplies and Exhaust “A” and “C” would remain operational.

Smoke control is by the normal HVAC System functioning in the smoke control mode. Refer to 9.5.1.1.6 for additional information.

(10) Consequences of Fire Suppression—Suppression extinguishes the fire. Refer to Section 3.4, "Water Level (Flood) Design," for the drain system.

(11) Design Criteria Used for Protection Against Inadvertent Operation, Careless Operation or Rupture of the Suppression System:

(a) Refer to Section 3.4, "Water Level (Flood) Design," for the drain system.

(b) Provision of raised supports for the equipment

(c) Location of manual suppression system in an area external to the room containing the safety-related equipment

(d) ANSI B31.1 standpipe (rupture unlikely)

(12) Fire Containment or Inhibiting Methods Employed:

(a) The functions are located in a separate fire-resistive enclosure.

(b) The means of detection, suppression and alarming are provided and accessible.

(c) Fire stops are provided for cable tray and piping penetrations through rated fire barriers.

(13) Remarks—This equipment is required to function to support equipment required for remote shutdown and therefore is in a fire area separate from the control room and its HVAC System.

The exhaust fans do nor provide any cooling function. They only serve a purge function which is not necessary to the cooling function of the HVAC System.

9A.4.2.6.5 HVAC "A" Intake Duct and Exhaust (Rm Nos. 613, 617, 618 and 619)

(1) Fire Area—FC1110

(2) Equipment: See Table 9A.6-3

Safety-Related	Provides Core Cooling
Yes, D1	Yes, See Remarks.

(3) Radioactive Material Present—None.

(4) Qualification of Fire Barriers—The building exterior wall, Rm No. 619 is a fire barrier and is of three hour fire-resistive concrete construction. The walls common to fire areas FC4220 (Rm Nos. 614, 616 and 654) and fire area FC1310 (Rm No. 653) are fire barriers of three hour fire-resistive concrete construction. The interior walls of Rm Nos. 613, 617 618 and 619 are common to fire area FC1110 and are not designated fire barriers. The supply duct through the building external wall in Rm No. 619 and the exhaust duct through the ceiling in Rm No. 618 do not have fire dampers. See Subsection 9.5.1.1.6.for a discussion and justification of this design feature. The wall adjacent to the steam tunnel is designated as a fire barrier and is of three hour fire-resistive concrete construction. The ceiling of fire area FC1110

forms a building exterior boundary and is of three hour fire-resistive concrete construction. A section of the floor, common to fire area FC5110 below, is also of three hour fire-resistive concrete construction. The remainder of the floor is common to fire area FC1110 below and is not a fire barrier. Access to the HVAC "A" area is provided through Rm Nos. 653 and 654. Access to Rm No. 617 is via a removable panel.

(5) Combustibles Present—(NCLL Applies)

Type	Fire Loading Total Heat of Combustion (MJ)
Cable in trays	727 MJ/m^2 NCLL (727 MJ/m^2 maximum average) applies

(6) Detection Provided—Class A Supervised POC detection system in the fire area and manual pull alarm station at 6.70-J.67.

(7) Suppression Available:

Type	Location/Actuation
Standpipe and hose reel	6.60-J.67/Manual
ABC hand extinguishers	6.60-J.67 and 6.70-K.55/Manual

(8) Fire Protection Design Criteria Employed:

(a) The function is located in a fire area which is separate from fire areas providing alternate means of performing the safety or shutdown function.

(b) Fire detection and suppression capability is provided and accessible.

(c) Fire stops are provided for cable tray and piping penetrations through designated fire barriers.

(9) Consequences of Fire—Postulated fire assumes loss of the function and possibly the shutdown of RCW "A" and consequential loss of division 1 due to fire generated smoke and heat. HVAC Supplies and Exhaust "B" and "C" would remain operational.

Smoke control is by the normal HVAC System functioning in the smoke control mode. Refer to 9.5.1.1.6 for additional information.

(10) Consequences of Fire Suppression—Suppression extinguishes the fire. Refer to Section 3.4, "Water Level (Flood) Design," for the drain system.

(11) Design Criteria Used for Protection Against Inadvertent Operation, Careless Operation or Rupture of the Suppression System:

(a) Refer to Section 3.4, "Water Level (Flood) Design," for the drain system.

(b) Provision of raised supports for the equipment

(c) Location of manual suppression system in an area external to the room containing the safety-related equipment

(d) ANSI B31.1 standpipe (rupture unlikely)

(12) Fire Containment or Inhibiting Methods Employed:

(a) The functions are located in a separate fire-resistive enclosure.

(b) The means of detection, suppression and alarming are provided and accessible.

(c) Fire stops are provided for cable tray and piping penetrations through rated-fire barriers.

(13) Remarks—This equipment is also required to function to support equipment required for remote shutdown and therefore is in a fire area separate from the control room and its HVAC equipment.

The exhaust fans do not provide any cooling function. They only serve a purge function which is not necessary to the cooling function of the HVAC System.

9A.4.2.6.6 Control Room HVAC Exhaust "B" (Rm No. 626)

(1) Fire Area—FC4220

(2) Equipment: See Table 9A.6-3

Safety-Related	Provides Core Cooling
Yes, D2	No

(3) Radioactive Material Present—None.

(4) Qualification of Fire Barriers—The building exterior wall and the steam tunnel wall are fire barriers of three hour fire-resistive concrete construction.

The common interior walls between Rm Nos. 627 and 663 are in the same fire area and are not fire barriers. The ceiling of this fire area forms a building exterior boundary and is of three hour fire-resistive concrete construction. The exhaust duct through the ceiling in Rm No. 626 does not have a fire damper. See Subsection 9.5.1.1.6 for a discussion of this design feature. A section of the floor common to fire area FC1210 and FC5010 below, is also of three hour fire-resistive concrete construction. Access to the CR HVAC Exhaust area is provided from Rm No. 622 through Rm No. 627.

(5) Combustibles Present—(NCLL Applies)

Type	Fire Loading Total Heat of Combustion (MJ)
Cable in trays	727 MJ/m^2 NCLL (727 MJ/m^2 maximum average) applies

(6) Detection Provided—Class A Supervised POC detection system in the fire area and manual pull alarm station at 1.42-J.67.

(7) Suppression Available:

Type	Location/Actuation
Standpipe and hose reel	1.37-J.67/Manual
ABC hand extinguishers	1.42-J.67 and 1.30-K.55/Manual

(8) Fire Protection Design Criteria Employed:

(a) The function is located in a fire area which is separate from fire areas providing alternate means of performing the safety or shutdown function.

(b) Fire detection and suppression capability is provided and accessible.

(c) Fire stops are provided for cable tray and piping penetrations through designated fire barriers.

(9) Consequences of Fire—Postulated fire assumes loss of the function, but continued operation of the exhaust fans are not required for the equipment and systems served. If the CR HVAC “B” or “C” are placed in the smoke removal mode the control room should remain habitable.

Smoke control is by the normal HVAC System functioning in the smoke control mode. Refer to 9.5.1.1.6 for additional information.

(10) Consequences of Fire Suppression—Suppression extinguishes the fire. Refer toSection 3.4, "Water Level (Flood) Design", for the drain system.

(11) Design Criteria Used for Protection Against Inadvertent Operation, Careless Operation or Rupture of the Suppression System:

(a) Refer to Section 3.4, "Water Level (Flood) Design," for the drain system.

(b) Provision of raised supports for the equipment

(c) Location of manual suppression system in an area external to the room containing the safety-related equipment

(d) ANSI B31.1 standpipe (rupture unlikely)

(12) Fire Containment or Inhibiting Methods Employed:

(a) The functions are located in a separate fire-resistive enclosure.

(b) The means of detection, suppression and alarming are provided and accessible.

(c) Fire stops are provided for cable tray and piping penetrations through rated fire barriers.

(13) Remarks—The exhaust fans do not provide any cooling function. They only serve a purge function which is not necessary to the cooling function of the HVAC System.

Quantities of cable may be so small that they will be in conduit rather than cable tray.

9A.4.2.6.7 Chiller Unit “A” (Rm No. 612)

(1) Fire Area—FC1110

(2) Equipment: See Table 9A.6-3

Safety-Related	Provides Core Cooling
Yes, D1	Yes, D1

(3) Radioactive Material Present—None.

(4) Qualification of Fire Barriers—One wall of Rm No. 612 is common to the steam tunnel and another is a building exterior wall. Both are designated as fire barriers and are of three hour fire-resistive concrete construction. The two interior walls area FC4310 (Rm Nos. 611, 615 and 654) are also of three hour fire-resistive concrete construction. The interior wall of Rm No. 612 common to Rm No. 618 is not rated as a fire barrier. The ceiling is a building exterior wall and is of three hour fire-resistive concrete construction. The floor is common to adjacent fire area FC1310 below and is also of three hour fire-resistive concrete construction. Access to this room is provided from Rm No. 611 via a three hour fire-rated door.

(5) Combustibles Present—(NCLL Applies)

Type	Fire Loading Total Heat of Combustion (MJ)
Cable in trays Small quantities of lubricants	727 MJ/m^2 NCLL (727 MJ/m^2 maximum average) applies

(6) Detection Provided—Class A Supervised POC detection system in the fire area and manual pull alarm station at 6.70-J.67.

(7) Suppression Available:

Type	Location/Actuation
Standpipe and hose reel	6.60-J.67/Manual
ABC hand extinguishers	6.60-J.67 and 6.70-K.55/Manual

(8) Fire Protection Design Criteria Employed:

(a) The function is located in a fire area which is separate from fire areas providing alternate means of performing the safety or shutdown function.

(b) Fire detection and suppression capability is provided and accessible.

(c) Fire stops are provided for cable tray and piping penetrations through designated fire barriers.

(9) Consequences of Fire—Postulated fire assumes loss of the function: Therefore it is assumed that the loss of chiller unit “A” would necessitate shutting down the RCW “A” system, which consequentially results in the loss of Division 1. RCW divisions “B” and “C” would remain operational.

Smoke control is by the normal HVAC System functioning in the smoke control mode. Refer to 9.5.1.1.6 for additional information.

(10) Consequences of Fire Suppression—Suppression extinguishes the fire. Refer to Section 3.4, "Water Level (Flood) Design," for the drain system.

(11) Design Criteria Used for Protection Against Inadvertent Operation, Careless Operation or Rupture of the Suppression System:

(a) Refer to Section 3.4, "Water Level (Flood) Design," for the drain system.

(b) Provision of raised supports for the equipment

(c) Location of manual suppression system in an area external to the room containing the safety-related equipment

(d) ANSI B31.1 standpipe (rupture unlikely)

(12) Fire Containment or Inhibiting Methods Employed:

(a) The functions are located in a separate fire-resistive enclosure.

(b) The means of detection, suppression and alarming are provided and accessible.

(c) Fire stops are provided for cable tray and piping penetrations through rated fire barriers.

(13) Remarks—This equipment is required to function to support equipment required for remote shutdown and therefore must be in a fire area separate from the control room.

9A.4.2.6.8 Control Room HVAC Supply “C” (Rm No. 615)

(1) Fire Area—FC4310

(2) Equipment: See Table 9A.6-3

Safety-Related	Provides Core Cooling
Yes, D3	Yes, See Remarks.

(3) Radioactive Material Present—None.

(4) Qualification of Fire Barriers—The building exterior wall which has an air intake vent from the outside and the other building exterior wall are both designated fire barriers and are of three hour fire-resistive concrete construction. Another wall common to Rm No. 612 (FC1110) is also designated as a fire barriers and is of three hour fire-resistive concrete construction. The remaining walls are internal to fire area FC4310 and are not fire barriers. The supply duct through the building exterior wall in Rm No. 615 does not have a fire damper. See Subsection 9.5.1.1.6 for a discussion and justification of this design feature. The ceiling is a building exterior wall and is of three hour fire-resistive concrete construction. The floor is common to fire area FC1310 below and is also of three hour fire-resistive concrete construction. Access to Rm No. 615 is provided from Rm No. 611.

(5) Combustibles Present—(NCLL Applies)

Type	Fire Loading Total Heat of Combustion (MJ)
Cable in trays Bag filters	727 MJ/m^2 NCLL (727 MJ/m^2 maximum average) applies

(6) Detection Provided—Class A Supervised POC detection system in the fire area and manual pull alarm station at 6.70-J.67.

(7) Suppression Available:

Type	Location/Actuation
Standpipe and hose reel	6.70 - K.52 & 6.60-J.67/Manual
ABC hand extinguishers	6.60-J.67 and 6.70-K.55/Manual

(8) Fire Protection Design Criteria Employed:

(a) The function is located in a fire area which is separate from fire areas providing alternate means of performing the safety or shutdown function.

(b) Fire detection and suppression capability is provided and accessible.

(c) Fire stops are provided for cable tray and piping penetrations through designated fire barriers.

(9) Consequences of Fire—Postulated fire assumes loss of the function CR HVAC supply “C” function. Alternate means is provided by CRHVAC "B" supply.

Smoke control is by the normal HVAC System functioning in the smoke control mode. Refer to 9.5.1.1.6 for additional information.

(10) Consequences of Fire Suppression—Suppression extinguishes the fire. Refer to Section 3.4, "Water Level (Flood) Design," for the drain system.

(11) Design Criteria Used for Protection Against Inadvertent Operation, Careless Operation or Rupture of the Suppression System:

(a) Refer to Section 3.4, "Water Level (Flood) Design," for the drain system.

(b) Provision of raised supports for the equipment

(c) Location of manual suppression system in an area external to the room containing the safety-related equipment

(d) ANSI B31.1 standpipe (rupture unlikely)

(12) Fire Containment or Inhibiting Methods Employed:

(a) The functions are located in a separate fire-resistive enclosure.

(b) The means of detection, suppression and alarming are provided and accessible.

(c) Fire stops are provided for cable tray and piping penetrations through rated fire barriers.

(13) Remarks—safety-related cooling for multiple divisional equipment is provided by the equipment in this room which is associated with division 3 power.

9A.4.2.6.9 Passageway and Room (Rm Nos. 611 and 652)

(1) Fire Area—FC4310

(2) Equipment: See Table 9A.6-3

Safety-Related	Provides Core Cooling
Yes, D3	Yes, D3 See Remarks.

(3) Radioactive Material Present—None.

(4) Qualification of Fire Barriers—Passageway Rm No. 611 provides access to CR HVAC supply “C” (Rm No. 615) and Rm No. 652 via non fire barrier doors. It also provides access to Rm Nos. 612, 651 and 634 via three hour fire barrier doors. The building exterior walls and one interior wall of Rm No. 652 (common to fire area FC1310) are designated as fire barriers and are of three

hour fire-resistive concrete construction. Room 611 has one building exterior wall which is of three hour fire-resistive concrete construction. Interior walls of Rm No. 611 that are common to Rm No. 615 are internal to fire area FC4310 and are not fire barriers. The remaining interior walls of room 611 are common to Rm Nos. 631, 633, 634, 651 and 612, fire areas FC1310 and FC1110, and are of three hour fire-resistive concrete construction. Access and egress from Rm No. 611 is via the stairwell (Rm No. 336). The ceiling of Rm No. 611 and 652 is a building exterior wall and is of three hour fire-resistive concrete construction. The floor of Rm Nos. 611 and 652 is common to fire areas FC1310 below and is also of three hour fire-resistive concrete construction.

(5) Combustibles Present—(NCLL Applies)

Type	Fire Loading Total Heat of Combustion (MJ
Cable in trays	727 MJ/m^2 NCLL (727 MJ/m^2 maximum average) applies

(6) Detection Provided—Class A Supervised POC detection system in the fire area and manual pull alarm station at 6.70-J.67.

(7) Suppression Available:

Type	Location/Actuation
Standpipe and hose reel	6.60-J.67/Manual
ABC hand extinguishers	6.60-J.67 and 6.70-K.55/Manual

(8) Fire Protection Design Criteria Employed:

(a) The function is located in a fire area which is separate from fire areas providing alternate means of performing the safety or shutdown function.

(b) Fire detection and suppression capability is provided and accessible.

(c) Fire stops are provided for cable tray and piping penetrations through designated fire barriers.

(9) Consequences of Fire—Postulated fire assumes loss of function. Even though access to rooms 612, 636, 631, 634 and 651 are not possible, the equipment in these rooms are functional (they are in a different fire area). Alternate means is provided by CRHVAC "B".

(10) Consequences of Fire Suppression—Suppression extinguishes the fire. Refer to Section 3.4, "Water Level (Flood) Design," for the drain system.

(11) Design Criteria Used for Protection Against Inadvertent Operation, Careless Operation or Rupture of the Suppression System:

(a) Refer to Section 3.4, "Water Level (Flood) Design," for the drain system.

(b) ANSI B31.1 standpipe (rupture unlikely)

(12) Fire Containment or Inhibiting Methods Employed:

(a) The functions are located in a fire-resistive enclosure.

(b) The means of detection, suppression and alarming are provided and accessible.

(c) Fire stops are provided for cable tray and piping penetrations through rated fire barriers.

(13) Remarks—safety-related cooling for multiple divisions is provided by redundant systems. The equipment on level 17150 in this fire area provides one division of cooling for the multi-divisional control room.

9A.4.2.6.10 Control Room HVAC Exhaust "C" (Rm No. 614)

(1) Fire Area—FC4310

(2) Equipment: See Table 9A.6-3

Safety-Related	Provides Core Cooling
Yes, D3	No, See Remarks.

(3) Radioactive Material Present—None.

(4) Qualification of Fire Barriers—All walls in this area are interior walls. The walls common to fire area FC1110 are designated as fire barriers and are of three hour fire-resistive concrete construction. The remaining interior walls are not fire barriers. The ceiling is a building exterior wall and is also of three hour

fire-resistive concrete construction. The floor is common to adjacent fire area FC1310 below, is of three hour fire-resistive concrete construction. Access to the CR HVAC "C" exhaust area is provided from Rm No. 631.

(5) Combustibles Present—(NCLL Applies)

Type	Fire Loading Total Heat of Combustion (MJ)
Cable in trays	727 MJ/m^2 NCLL (727 MJ/m^2 maximum average) applies

(6) Detection Provided—Class A Supervised POC detection system in the fire area and manual pull alarm station at 6.70-J.67.

(7) Suppression Available:

Type	Location/Actuation
Standpipe and hose reel	6.60-J.67/Manual
ABC hand extinguishers	6.60-J.67 and 6.70-K.55/Manual

(8) Fire Protection Design Criteria Employed:

(a) The function is located in a fire area which is separate from fire areas providing alternate means of performing the safety or shutdown function.

(b) Fire detection and suppression capability is provided and accessible.

(c) Fire stops are provided for cable tray and piping penetrations through designated fire barriers.

(9) Consequences of Fire—Postulated fire assumes loss of the function, but continued operation of the exhaust fans is not required for the equipment and systems served. If the control room HVAC is manually switched to the smoke removal mode the control room should remain habitable.

Smoke control is by the normal HVAC System functioning in the smoke control mode. Refer to 9.5.1.1.6 for additional information.

(10) Consequences of Fire Suppression—Suppression extinguishes the fire. Refer to Section 3.4, "Water Level (Flood) Design," for the drain system.

(11) Design Criteria Used for Protection Against Inadvertent Operation, Careless Operation or Rupture of the Suppression System:

(a) Refer to Section 3.4, "Water Level (Flood) Design," for the drain system.

(b) Provision of raised supports for the equipment

(c) Location of manual suppression system in an area external to the room containing the safety-related equipment

(d) ANSI B31.1 standpipe (rupture unlikely)

(12) Fire Containment or Inhibiting Methods Employed:

(a) The functions are located in a separate fire-resistive enclosure.

(b) The means of detection, suppression and alarming are provided and accessible.

(c) Fire stops are provided for cable tray and piping penetrations through rated fire barriers.

(13) Remarks—The exhaust fans do not provide any cooling function. They only serve a purge function which is not necessary to the cooling function of the HVAC System.

Quantities of cable may be so small that they will be in conduit rather than cable tray.

9A.4.2.6.11 HVAC "C" Intake Duct and Exhaust (Rm Nos. 631, 632, 633, 634, 651, and 653)

(1) Fire Area—FC1310

(2) Equipment: See Table 9A.6-3

Safety-Related	Provides Core Cooling
Yes, D3	No, D3

(3) Radioactive Material Present—None.

(4) Qualification of Fire Barriers—The building exterior wall, Rm Nos. 651 and 653 is a fire barrier and is of three hour fire-resistive concrete construction. Rm No. 653 has an air intake opening from the outside. The division 3 supply duct through the building exterior wall in Rm No. 653 and the exhaust duct through the ceiling of Rm No. 634 do not have fire dampers. See Subsection 9.5.1.1.6 for a discussion and justification of this design feature. The wall

common to Rm No. 619, fire area FC1110 and Rm Nos. 616, 614, 654, and 611, fire area FC4220 are of three hour fire-resistive concrete construction. The remaining walls are internal and common to fire area FC1310. Therefore they are not fire barriers. The ceiling is a building exterior fire wall and is of three hour fire-resistive concrete construction. Sections of the floor, common to fire areas FC4310 and FC5110 below, are also of three hour fire-resistive concrete construction. Access to Rm Nos. 634 and 651 is provided from room 611 via a three hour fire-resistive door. Access to Rm Nos. 632 and 633 is via removable panels.

(5) Combustibles Present—(NCLL Applies)

Type	Fire Loading Total Heat of Combustion (MJ)
Cable trays	727 MJ/m^2 NCLL (727 MJ/m^2 maximum average) applies

(6) Detection Provided—Class A Supervised POC detection system in the fire area and manual pull alarm station at 670-J.67.

(7) Suppression Available:

Type	Location/Actuation
Standpipe and hose reel	6.60-J.67/Manual
ABC hand extinguishers	6.60-J.67 and 6.70-K.55/Manual

(8) Fire Protection Design Criteria Employed:

(a) The function is located in a fire area which is separate from fire areas providing alternate means of performing the safety or shutdown function.

(b) Fire detection and suppression capability is provided and accessible.

(c) Fire stops are provided for cable tray and piping penetrations through designated fire barriers.

(9) Consequences of Fire—Postulated fire assumes loss of the function, and possibly the shutdown of RCW “C” and consequential loss of division 3 due to fire generated smoke and heat. HVAC Supplies and Exhausts “A” and “B” would remain operational.

Smoke control is by the normal HVAC System functioning in the smoke control mode. Refer to 9.5.1.1.6 for additional information.

(10) Consequences of Fire Suppression—Suppression extinguishes the fire. Refer to Section 3.4, "Water Level (Flood) Design," for the drain system.

(11) Design Criteria Used for Protection Against Inadvertent Operation, Careless Operation or Rupture of the Suppression System:

(a) Refer to Section 3.4, "Water Level (Flood) Design," for the drain system.

(b) Provision of raised supports for the equipment

(c) Location of manual suppression system in an area external to the room containing the safety-related equipment

(d) ANSI B31.1 standpipe (rupture unlikely)

(12) Fire Containment or Inhibiting Methods Employed:

(a) The functions are located in a separate fire-resistive enclosure.

(b) The means of detection, suppression and alarming are provided and accessible.

(c) Fire stops are provided for cable tray and piping penetrations through rated fire barriers.

(13) Remarks—The exhaust fans do not provide any cooling function. They only serve a purge function which is not necessary to the cooling function of the HVAC System.

9A.4.3 Turbine Building

9A.4.3.1 Floor One El 5.3 m

9A.4.3.1.1 Floor One (Except Fire Areas FT1501—FT1503)

(1) Fire Area—FT1500

(2) Equipment: See Table 9A.6-4

Safety-Related	Provides Core Cooling
No	No

(3) Radioactive Material Present—None that can be released as a result of fire.

(4) Qualification of Fire Barriers—The portion of the exterior walls shared with the radwaste tunnel, and the stair tower (Rm 122) are of 3 h fire-resistive concrete construction. The remaining exterior walls are not designated as fire barriers but are constructed of concrete backed by exterior fill. All interior walls are concrete but are not fire barriers. There are several metal gratings installed in different locations/elevations between this floor and the upper floors in the same fire area. One grating is located in room 140 at elevation 6.65m. Another one is in room 112 at elevation 16.80m. The last one is in room 120 at elevation 6.95m. The offgas (O/G) charcoal bed area (Rm 112) extends to the second floor and its ceiling is at elevation 22.15m. The condenser pit (Rm 120) extends to the third floor and its ceiling is at elevation 30.25m. The remaining portion of the ceiling of this floor is at elevation 12.25m and is concrete but is not designated as a fire barrier. The concrete base mat of the building forms the floor. Five staircases, all of which are enclosed at this elevation, serve this floor. Two of the staircases (Rms 110, and 131) become open staircases in the same fire area (FT1500) at higher elevations of the building and, therefore, do not have fire rated walls or doors. The third staircase is in room 141, and provides access from the radwaste tunnel at elevation 8.95m via a 3 h fire rated curbed door to the sump room (Rm 142), the condensate pump area (Rm 140) and the condensate filter room (Rm 241 at elevation 12.3m), all of which are in the same fire area (FT1500).

The fourth, and the fifth staircases are discussed in the subsections 9A.4.3.1.3, and 9A.4.3.1.4 (FT1502 and FT1503 respectively).

(5) Combustibles Present:

Fire Loading	Total Heat of Combustion (MJ)
(a) Cable in conduit, and less than the equivalent of 0.61m cable trays	Acceptable
(b) Limited quantities of lubricants in pumps	Negligible
(c) Charcoal in offgas charcoal bed	Does not contribute to fire loading

(6) Detection Provided—Class A supervised POC, and manual alarm pull stations at Columns—Rows (C-R) D.4-3.1, C.6-6.8, G.5-6.8, and G.5-2.5.

(7) Suppression Available:

Type	Location/Actuation
Modified Class III standpipes and hose reel	C-R D.4-3.1, C-R C.6-6.8, C-R G.5-6.8, C-R G.5-2.4./Manual
ABC hand extinguishers	C-R D.5-3.1, C-R C.6-6.7, C-R G.6-6.8, C-R G.3-2.5./Manual
Closed head sprinkler system, 8.13 liters/m^2 coverage	Room 120/Automatic

(8) Fire Protection Design Criteria Employed:

(a) Fire detection and suppression capability is provided and accessible;

(b) Fire stops are provided for penetrations through rated fire barriers.

(9) Consequences of Fire—Postulated fire assumes loss of function. Smoke from a fire would be removed by the normal HVAC System except for the following rooms:

(a) Rooms 110 and 142 by normal HVAC and process exhaust

(b) Rooms 112 and 144 by process exhaust

(10) Consequences of Fire Suppression—Suppression extinguishes the fire. Refer to Section 3.4, "Water Level (Flood) Design," for the drain system.

(11) Design Criteria Used for Protection Against Inadvertent Operation, Careless Operation or Rupture of the Suppression System:

(a) Provision of raised supports for the equipment

(b) Refer to Section 3.4, "Water Level (Flood) Design," for the drain system.

(12) Fire Containment or Inhibiting Methods Employed:

(a) Fire stops are provided for penetrations through fire rated barriers.

(b) The means of fire detection, suppression and alarming are provided and accessible.

(13) Remarks:

(a) Smoke detectors, and temperature controllers are mounted in the exhaust duct of the offgas system to detect any fire in the charcoal beds. The fire is contained by isolating the charcoal absorber vessel and purging the vessel with nitrogen gas.

(b) Electrical cable insulation in conduit does not represent a combustible fire load.

(c) The total flow of the closed head sprinkler system is estimated to be 600 gpm.

9A.4.3.1.2 Air Compressors and Dryer Area (Rm No. 111)

(1) Fire Area—FT1501

(2) Equipment: See Table 9A.6-4

Safety-Related	Provides Core Cooling
No	No

(3) Radioactive Material Present—None that can be released as a result of fire.

(4) Qualification of Fire Barriers—This room is separated from the rest of the turbine building at elevation 5.3m. Only the exterior wall which is closest to the rest of the turbine building (southern portion) is of 3 hr. fire-resistive concrete construction. The remaining exterior walls are not designated as fire barriers but are constructed of concrete, and they are all back filled. The ceiling is at elevation 12.25m and is concrete but is not designated as a fire barrier. The floor is raised and is at elevation 7.9m. The concrete base mat of the building forms the floor. There is an entrance to this room, and it is via the staircase room 114. Also, the elevator No. 1 (Rm 115) which provides access to switchgear areas car A and B areas on second, third floor, and T/B HVAC intake area.

(5) Combustibles Present:

Fire Loading	Total Heat of Combustion (MJ)
(a) Cable in conduit, and dispersed in cable trays	Acceptable
(b) Limited quantities of lubricants in pumps	Negligible

(6) Detection Provided—Class A supervised POC, and manual alarm pull station at C-R, K.8-0.5.

(7) Suppression Available:

Type	Location/Actuation
Standpipes and hose reel	C-R K.8-0.5/Manual
ABC hand extinguishers	C-R K.8-0.5/Manual

(8) Fire Protection Design Criteria Employed:

(a) Fire detection and suppression capability is provided and accessible.

(b) Fire stops are provided for penetrations through rated fire barriers.

(9) Consequences of Fire—Postulated fire assumes loss of function. Smoke from a fire would be removed by the normal HVAC System.

(10) Consequences of Fire Suppression—Suppression extinguishes the fire. Refer to Section 3.4, "Water Level (Flood) Design," for the drain system.

(11) Design Criteria Used for Protection Against Inadvertent Operation, Careless Operation or Rupture of the Suppression System:

(a) Provision of raised supports for the equipment

(b) Refer to Section 3.4, "Water Level (Flood) Design," for the drain system.

(12) Fire Containment or Inhibiting Methods Employed:

(a) Fire stops are provided for penetrations through fire rated barriers.

(b) The means of fire detection, suppression and alarming are provided and accessible.

(13) Remarks—Electrical cable insulation in conduit does not represent a combustible fire load.

9A.4.3.1.3 Stair Tower # 1 (Rm No. 114)

(1) Fire Area—FT1502

(2) Equipment: See Table 9A.6-4

Safety-Related	Provides Core Cooling
No	No

(3) Radioactive Material Present—None.

(4) Qualification of Fire Barriers—Walls, floor, and ceiling are concrete and rated 2 hour fire-resistive for personnel protection. The stair tower provides controlled clean access to the Air compressors and dryers at level 1, switchgear area A, chillers area, and auxiliary boiler areas at level 2, switchgear area B, gas turbine generator at level 3, and to the roof (level 4). There is a 1 hour rated fire-resistive door at each floor elevation.

(5) Combustibles Present—No significant quantities of exposed combustibles.

(6) Detection Provided—Class A supervised POC at each building floor elevation and alarm pull station external to the stair tower at each floor (except the roof).

(7) Suppression Available:

Type	Location/Actuation
Standpipes and hose reel	C-R K.5-0.5 at first floor, K.4-0.6 at second & third floor/Manual
ABC hand extinguishers	C-R K.9-0.5 at first floor, K.5-0.5 at second & third floor/Manual

(8) Fire Protection Design Criteria Employed:

(a) The stair tower is located in a separate fire-resistive enclosure.

(b) Fire detection and suppression capability is provided and accessible.

(9) Consequences of Fire—The postulated fire assumes loss of function of the stair tower. Smoke from a fire would be removed by the normal HVAC System.

(10) Consequences of Fire Suppression—Suppression extinguishes the fire. Refer to Section 3.4, “Water Level (Flood) Design,” for the drain system.

(11) Design Criteria Used for Protection Against Inadvertent Operation, Careless Operation or Rupture of the Suppression System:

(a) Refer to Section 3.4, “Water Level (Flood) Design,” for the drain system.

(12) Fire Containment or Inhibiting Methods Employed:

(a) The function is located in a fire-resistive enclosure.

(b) The means of fire detection, suppression and alarming are provided and accessible.

(13) Remarks—None.

9A.4.3.1.4 Stair Tower # 2 (Rm No. 122)

(1) Fire Area—FT1503

(2) Equipment: See Table 9A.6-4

Safety-Related	Provides Core Cooling
No	No

(3) Radioactive Material Present—None.

(4) Qualification of Fire Barriers—Walls, floor, and ceiling are concrete and rated 2 hour fire-resistive for personnel protection. The stair tower services the controlled access areas of all the floors of the turbine building except the switchgear areas A and B, chiller area, gas turbine generator area, and auxiliary boiler area of the turbine building. There is a 1 hour rated fire-resistive door at each floor elevation. Alternate access is provided by stair towers No. 3, No. 4, and No. 5 on the opposite sides of the building.

(5) Combustibles Present—No significant quantities of exposed combustibles.

(6) Detection Provided—Class A supervised POC at each building floor elevation and alarm pull station external to the stair tower at each floor elevation.

(7) Suppression Available:

Type	Location/Actuation
Standpipe and hose reel	C-R K.5-6.9 at first floor, C.8-6.7 at second & third floors C.9-6.6 at fourth floor/Manual
ABC hand extinguishers	C-R K.5-6.9 at first floor, C.7-6.7 at second & third floors C.9-6.7 at fourth floor/Manual

(8) Fire Protection Design Criteria Employed:

(a) The stair tower is located in a separate fire-resistive enclosure.

(b) Alternate access and egress are provided by separate stair tower located at a remote location.

(c) Fire detection and suppression capability is provided and accessible.

(9) Consequences of Fire—The postulated fire assumes loss of function of the stair tower. Access to the other stair tower is maintained. Smoke from a fire would be removed by the normal HVAC System.

(10) Consequences of Fire Suppression—Suppression extinguishes the fire. Refer to Section 3.4, "Water Level (Flood) Design," for the drain system.

(11) Design Criteria Used for Protection Against Inadvertent Operation, Careless Operation or Rupture of the Suppression System:

(a) Refer to Section 3.4, "Water Level (Flood) Design," for the drain system.

(12) Fire Containment or Inhibiting Methods Employed:

(a) The function is located in a fire-resistive enclosure.

(b) The means of fire detection, suppression and alarming are provided and accessible.

(13) Remarks—None.

9A.4.3.2 Floor Two El 12.3m

9A.4.3.2.1 Floor Two (Except Fire Areas FT-1501, FT2500—FT2505)

(1) Fire Area—FT1500

(2) Equipment: See Table 9A.6-4.

Safety-Related	Provides Core Cooling
Yes	No

(3) Radioactive Material Present—None that can be released as a result of fire.

(4) Qualification of Fire Barriers—With the exception of the walls common with lube oil condition room (Rm 230), the steam tunnel (Rm 219), the stair towers (Rms 122, 212, 236, and 249), the auxiliary boiler area (Rm 247), the chillers area (Rm 248), the elevator No.1 (Rm 115), and the switchgear area (Rm 210) the walls are within fire area FT1500 and are not designated as fire barriers. The north exterior wall is equivalent to 1 hour fire barrier. The ceiling is of

concrete construction and is not required to serve as a fire barrier. The concrete base mat of the building forms the floor for the condenser pit, and a metal grating at elevation 10.3m surrounds the condenser.

There are several access ways to this floor within the turbine building:

(a) Room 122 provides access from all three floors.

(b) Rooms 212, 236, and 249 provide access only from the third and forth floors.

(c) Room 217 provides access from the first floor.

With the exception of the room 217, these stair towers are for floor to floor personnel entry and egress within the turbine building and are required to serve as a fire barrier. Each stair tower is provided with a 1 h rated fire-resistive door at each floor elevation.

(d) Elevator No. 2 (Rm 250) provides access to third and fourth floors.

(5) Combustibles Present:

Fire Loading	Total Heat of Combustion (MJ)
(a) Cable in conduit, any dispersed cable trays. (Any single stack assumed less than the equivalent of four 60-cm wide cable trays.)	Acceptable
(b) Limited quantities of lubricants in pumps	Negligible

(6) Detection Provided—Class A supervised POC on the floor and manual alarm pull stations at C-R. A.9-2.2, E.0-1.9, J.8-1.9, E.2-3.1, A.9-4.2, C.8-6.8, G.4-7.0, K.7-5.9

(7) Suppression Available:

Type	Location/Actuation
Standpipe and hose reel	C-R A.9-2.2, C-R E.0-1.9, C-R J.8-1.9, C-R E.2-3.1, C-R A.9-4.2, C-R C.8-6.8, C-R G.4-7.0,C-R K.7-5.9 /Manual
ABC hand extinguishers	C-R A.9-2.5, C-R D.8-1.9, C-R J.4-1.8, C-R A.9-4.5, C-R E 2-3.1, C-R C.7-6.6, C-R G.6-7.0, C-R K.3-5.9 /Manual
Closed head sprinkler system, 6.1 L/m^2 coverage	Room 222/Automatic

(8) Fire Protection Design Criteria Employed:

(a) Fire detection and suppression capability is provided and accessible.

(b) Fire stops are provided for penetrations through rated fire barriers.

(9) Consequences of Fire—Postulated fire assumes loss of function. Smoke from a fire would be removed by the normal HVAC System, except in rooms 216, 218, and 245 by process exhaust.

(10) Consequences of Fire Suppression—Suppression extinguishes the fire. Refer to Section 3.4, “Water Level (Flood) Design,” for the drain system.

(11) Design Criteria Used for Protection Against Inadvertent Operation, Careless Operation or Rupture of the Suppression System:

(a) Provision of raised supports for the equipment

(b) Refer to Section 3.4, “Water Level (Flood) Design,” for the drain system.

(12) Fire Containment or Inhibiting Methods Employed:

(a) Fire stops are provided for penetrations through fire rated barriers.

(b) The means of fire detection, suppression and alarming are provided and accessible.

(13) Remarks:

(a) The following safety-related equipment representing all four safety divisions is mounted on this floor: B21-PT301 A-D, C71-PS002 A-D

(b) Section 9A.5. Special Cases, provides justification for locating equipment from multiple safety divisions on this floor of the turbine building.

(c) Electrical cable insulation in conduit does not represent a combustible fire load.

(d) The maximum flow of the closed head sprinkler system is estimated to be 63.09 L/s.

9A.4.3.2.2 Switchgear "A" Area (Rm No. 210), and Chillers Area (Rm No. 248)

(1) Fire Area—FT1501

(2) Equipment: See Table 9A.6-4

Safety-Related	Provides Core Cooling
No	No

(3) Radioactive Material Present—None that can be released as a result of fire.

(4) Qualification of Fire Barriers—With the exception of the walls common to the auxiliary boiler area (Rm 247), the turbine building corridor (Rms 213\240), the stair towers (Rms 114, 212), and the elevator No. 2 (Rm 250), the walls are within the fire area FT1501 and are not required to serve as fire barriers. Only a portion of the ceiling above the chiller area is of 3 h fire-resistive concrete construction. The remaining portion of the ceiling, and the floor is not required to serve as fire barriers. There are four doors within this room;

(a) A 2 hour rated fire-resistive door which provides access to this room from the stair tower (Rm 114).

(b) A 3 hour fire-resistive door which provides access to the auxiliary boiler area (Rm 247).

(c) One within each room (on the North side wall) which is to be used as an emergency exit.

(5) Combustibles Present:

Fire Loading	Total Heat of Combustion (MJ)
Cable in conduit	Acceptable
Cable trays	1454 MJ/m^2 ECLL (1454 MJ/m^2 maximum average) applies.

(6) Detection Provided—Class A supervised POC on the floor and manual alarm pull stations at C-R. E.1-0.3, K.5-0.5.

(7) Suppression Available:

Type	Location/Actuation
Standpipe and hose reel	C-R E.1-0.3, C-R K.5-0.5/Manual
ABC hand extinguishers	C-R E.1-0.1, C-R K.7-0.4/Manual

(8) Fire Protection Design Criteria Employed:

(a) Fire detection and suppression capability is provided and accessible.

(b) Fire stops are provided for penetrations through rated fire barriers.

(9) Consequences of Fire—Postulated fire assumes loss of function. Smoke from a fire would be removed by the normal HVAC System.

(10) Consequences of Fire Suppression—Suppression extinguishes the fire. Refer to Section 3.4, “Water Level (Flood) Design,” for the drain system.

(11) Design Criteria Used for Protection Against Inadvertent Operation, Careless Operation or Rupture of the Suppression System:

(a) Provision of raised supports for the equipment

(b) Refer to Section 3.4, “Water Level (Flood) Design,” for the drain system.

(12) Fire Containment or Inhibiting Methods Employed:

(a) Fire stops are provided for penetrations through fire rated barriers.

(b) The means of fire detection, suppression and alarming are provided and accessible.

(13) Remarks—Electrical cable insulation in conduit does not represent a combustible fire load.

9A.4.3.2.3 Lube Oil Conditioning Area (Rm No. 230)

(1) Fire Area—FT2500

(2) Equipment: See Table 9A.6-4

Safety-Related	Provides Core Cooling
No	No

(3) Radioactive Material Present—None that can be released as a result of the fire.

(4) Qualification of Fire Barriers—The walls and the ceiling are fire barriers and they are of 3 h fire-resistive concrete construction. The concrete base mat of the building forms the floor. There is a 3 h fire-resistive door which provides entrance from the RFP power supply room (Rm 213) via the stairway to this room. All personnel entry and egress is by this single path. The high curb of the door forms a "tub" for the room which will contain 100% of the volume of oil from the conditioning unit in the event of a leak.

(5) Combustibles Present:

Fire Loading	Total Heat of Combustion (MJ)
3785.4 liters of Class III B lube oil	158,261 MJ

(6) Detection Provided—Class A supervised rate compensated thermal detectors. The detection system is a cross zoned system requiring two detectors, one in each zone to sense fire before initiating the suppression system. Manual alarm pull station at C-R K.7-5.9 in the RFP power supply room.

(7) Suppression Available:

Type	Location/Actuation
Standpipe and hose reel	C-R K.7-5.8/Manual
ABC hand extinguishers	C-R K.7-5.9/Manual
Deluge foam water sprinkler system, 6.1 L/min/m^2 coverage	Initiated by two detectors, one in each zone/Automatic

(8) Fire Protection Design Criteria Employed:

(a) Fire detection and suppression capability is provided and accessible.

(b) Fire stops are provided for penetrations through rated fire barriers.

(9) Consequences of Fire—Postulated fire assumes loss of function. Smoke from a fire would be removed by the process exhaust system.

(10) Consequences of Fire Suppression—Suppression extinguishes the fire. Refer to Section 3.4, "Water Level (Flood) Design," for the drain system.

(11) Design Criteria Used for Protection Against Inadvertent Operation, Careless Operation or Rupture of the Suppression System:

(a) Location of the manual suppression system external to the room

(b) Provision of raised supports for the equipment

(c) Refer to Section 3.4, "Water Level (Flood) Design," for the drain system.

(12) Fire Containment or Inhibiting Methods Employed:

(a) Fire stops are provided for penetrations through fire rated barriers.

(b) The means of fire detection, suppression and alarming are provided and accessible.

(13) Remarks—The lube oil conditioning room tank is approximately 3785 liters, therefore the deluge foam water sprinkler system is capable of suppressing any fire in this room.

9A.4.3.2.4 Stair Tower # 5 (Rm No. 236)

(1) Fire Area—FT2501

(2) Equipment: See Table 9A.6-4

Safety-Related	Provides Core Cooling
No	No

(3) Radioactive Material Present—None.

(4) Qualification of Fire Barriers—Walls, floor, and ceiling are concrete and rated 1 hour for personnel protection. The stair tower services the controlled access areas of all floors of the turbine building except the first floor, and the

switchgear areas A and B, chillers area, gas turbine generator, and auxiliary boiler area of the turbine building. There is a 2 hour rated fire-resistive door at each floor elevation. Alternate access is provided by stair tower No. 2, No. 3, and No. 4 on the opposite sides of the building.

(5) Combustibles Present—No significant quantities of exposed combustibles.

(6) Detection Provided—Class A supervised POC at each building floor elevation and alarm pull station external to the stair tower at each floor elevation.

(7) Suppression Available:

Type	Location/Actuation
Standpipe and hose reel	C-R K.7-5.8 at El.12.3m C-R K.3-5.8 at El.20.3m C-R H.1-6.5 at El.30.3m /Manual
ABC hand extinguishers	C-R K.9-5.9 at El.12.3m C-R K.0-5.7 at El.20.3m C-R H.1-6.6 at El.30.3m /Manual

(8) Fire Protection Design Criteria Employed:

(a) The stair tower is located in a separate fire-resistive enclosure.

(b) Alternate access and egress are provided by a separate stair tower located at a remote location.

(c) Fire detection and suppression capability is provided and accessible.

(9) Consequences of Fire—The postulated fire assumes loss of function of the stair tower. Access to the other stair tower is maintained.

Smoke from a fire would be removed by the normal HVAC System.

(10) Consequences of Fire Suppression—Suppression extinguishes the fire. Refer to Section 3.4, “Water Level (Flood) Design,” for the drain system.

(11) Design Criteria Used for Protection Against Inadvertent Operation, Careless Operation or Rupture of the Suppression System:

(a) Location of the manual suppression system external to the room

(b) Refer to Section 3.4, "Water Level (Flood) Design," for the drain system.

(c) Alternate access route provided

(12) Fire Containment or Inhibiting Methods Employed:

(a) The functions are located in a separate fire-resistive enclosure.

(b) The means of fire detection, suppression and alarming are provided and accessible.

(13) Remarks—None.

9A.4.3.2.5 Stair Tower # 3 (Rm No. 212)

(1) Fire Area—FT2502

(2) Equipment: See Table 9A.6-4

Safety-Related	Provides Core Cooling
No	No

(3) Radioactive Material Present—None.

(4) Qualification of Fire Barriers—Walls, floor, and ceiling are concrete and rated 2 hour for personnel protection. The stair tower services the controlled access areas of all the floors of the turbine building except the first floor and the switchgear areas A and B, chiller area, gas turbine generator, and auxiliary boiler area of the turbine building. There is a 2 hour rated fire-resistive door at each floor elevation. Alternate access is provided by stair tower No. 2, No. 4, and No. 5 on the opposite sides of the building.

(5) Combustibles Present—No significant quantities of exposed combustibles.

(6) Detection Provided—Class A supervised POC at each building floor elevation and alarm pull station external to the stair tower at each floor elevation.

(7) Suppression Available:

Type	Location/Actuation
Standpipe and hose reel at each floor elevation	C-R J.8-1.9/Manual
ABC hand extinguishers on each floor	C-R J.7-1.9/Manual

(8) Fire Protection Design Criteria Employed:

(a) The stair tower is located in a separate fire-resistive enclosure.

(b) Alternate access and egress are provided by separate stair tower located at a remote location.

(c) Fire detection and suppression capability is provided and accessible.

(9) Consequences of Fire—The postulated fire assumes loss of function of the stair tower. Access to the other stair tower is maintained. Smoke from a fire would be removed by the normal HVAC System.

(10) Consequences of Fire Suppression—Suppression extinguishes the fire. Refer to Section 3.4, "Water Level (Flood) Design," for the drain system.

(11) Design Criteria Used for Protection Against Inadvertent Operation, Careless Operation or Rupture of the Suppression System:

(a) Location of the manual suppression system external to the room

(b) Refer to Section 3.4, "Water Level (Flood) Design," for the drain system.

(c) Alternate access route provided

(12) Fire Containment or Inhibiting Methods Employed:

(a) The functions are located in a separate fire-resistive enclosure.

(b) The means of fire detection, suppression and alarming are provided and accessible.

(13) Remarks—None.

9A.4.3.2.6 House Boiler Area (Rm No. 247)

(1) Fire Area—FT2503

(2) Equipment: See Table 9A.6-4

Safety-Related	Provides Core Cooling
No	No

(3) Radioactive Material Present—None that can be released as a result of the fire.

(4) Qualification of Fire Barriers—The walls common with the chillers area (Rm 248) and the adjacent turbine building corridor (Rm 240) are fire barriers and they are of 3 h fire-resistive concrete construction. The other two walls are concrete but they are not fire barriers. This room is extended to the third floor and its ceiling is at elevation 30.25m. The ceiling is a fire barrier and it is of 3 h fire-resistive concrete construction. The concrete base mat of the building forms the floor. There is a 3 h fire rated, door which provide access from the chiller area to this room. All personnel normal entry and egress is by this path. Also there are two other doors (one located on the north side wall and the second one located on the east side wall) which to be used as emergency exit.

(5) Combustibles Present:

Fire Loading	Total Heat of Combustion (MJ)
(a) Cable in conduit and dispersed cable trays	Very limited quantities
(b) Limited quantities of lubricants in pumps	Negligible
(c) Limited quantities of No. 2 fuel oil with min. flash point of 37.8°C (class II combustible liquid) in the room	Normally negligible, see (d) below
(d) Significant quantities of oil stored external to the room could be pumped into the room by a broken line and uncontrolled pump	Normally none, could be significant from a leak

(6) Detection Provided—Class A supervised rate compensated thermal detectors. The detection system is a cross zoned system requiring two detectors, one in each zone, to sense fire before initiating the suppression system.

Manual alarm pull stations at C-R E.1-0.3 on the second floor in room 248 and C-R G.1-0.5 on the third floor in room 310.

(7) Suppression Available:

Type	Location/Actuation
Standpipe and hose reel	C-R E.1-0.3/Manual
ABC hand extinguishers	C-R E.1-0.2/Manual
Preaction sprinkler system	Initiated by two detectors, one per zone/Automatic

(8) Fire Protection Design Criteria Employed:

(a) Fire detection and suppression capability is provided and accessible.

(b) Fire stops are provided for penetrations through rated fire barriers.

(9) Consequences of Fire—Postulated fire assumes loss of function of the auxiliary boiler. Smoke from a fire would be removed by the process exhaust system.

(10) Consequences of Fire Suppression—Suppression extinguishes the fire. Refer to Section 3.4, “Water Level (Flood) Design,” for the drain system.

(11) Design Criteria Used for Protection Against Inadvertent Operation, Careless Operation or Rupture of the Suppression System:

(a) Location of the manual suppression system external to the room

(b) Provision of the preaction sprinkler system

(c) Provision of raised supports for the equipments

(d) Refer to Section 3.4, “Water Level (Flood) Design,” for the drain system.

(12) Fire Containment or Inhibiting Methods Employed:

(a) Fire stops are provided for penetrations through fire rated barriers.

(b) The means of fire detection, suppression and alarming are provided and accessible.

(13) Remarks—Electrical cable insulation in conduit does not represent a combustible fire load.

9A.4.3.2.7 Stair Tower # 4 (Rm No. 249)

(1) Fire Area—FT2504

(2) Equipment: See Table 9A.6-4

Safety-Related	Provides Core Cooling
No	No

(3) Radioactive Material Present—None.

(4) Qualification of Fire Barriers—Walls, floor, and ceiling are concrete and rated 1 hour for personnel protection. The stair tower services the controlled access areas of all the floors of the turbine building except the first floor and the switchgear areas A and B, chiller area, gas turbine generator, and auxiliary boiler area of the turbine building. There is a 1 hour rated fire-resistive door at each floor elevation. Alternate access is provided by stair tower No. 2, No. 3, and No. 5 on the opposite sides of the building.

(5) Combustibles Present—No significant quantities of exposed combustibles.

(6) Detection Provided—Class A supervised POC at each building floor elevation and alarm pull station external to the stair tower at each floor.

(7) Suppression Available:

Type	Location/Actuation
Standpipe and hose reel	C-R A.9-2.2 at El. 12.3m C-R A.8-1.9 at El. 20.3m C-R C.9-2.2 at El. 30.3m/Manual
ABC hand extinguishers	C-R A.9-2.3 at El. 12.3m C-R A.9-1.9 at El. 20.3m C-R C.9-2.1 at El. 30.3m/Manual

(8) Fire Protection Design Criteria Employed:

(a) The stair tower is located in a separate fire-resistive enclosure.

(b) Fire detection and suppression capability is provided and accessible.

(9) Consequences of Fire—The postulated fire assumes loss of function of the stair tower. Smoke from a fire would be removed by the normal HVAC System.

(10) Consequences of Fire Suppression—Suppression extinguishes the fire. Refer to Section 3.4, "Water Level (Flood) Design," for the drain system.

The doorways at all floors are curbed so that the water would be contained within the stair well.

(11) Design Criteria Used for Protection Against Inadvertent Operation, Careless Operation or Rupture of the Suppression System:

(a) Location of the manual suppression system external to the room

(b) Refer to Section 3.4, "Water Level (Flood) Design," for the drain system.

(c) Alternate access route provided

(12) Fire Containment or Inhibiting Methods Employed:

(a) The function is located in a fire-resistive enclosure.

(b) The means of fire detection, suppression and alarming are provided and accessible.

(13) Remarks—None.

9A.4.3.2.8 Steam Tunnel Area (Rm No. 219)

(1) Fire Area—FT2505

(2) Equipment: See Table 9A.6-4

Safety-Related	Provides Core Cooling
Yes	No

(3) Radioactive Material Present—None that can be released as a result of the fire.

(4) Qualification of Fire Barriers—The walls, the floor, and the ceiling are fire barriers and they are of 3 h fire-resistive concrete construction. This room is extended to the third floor, and the ceiling is at elevation 30.25m.

(5) Combustibles Present:

Fire Loading	Total Heat of Combustion (MJ)
(a) Cable in conduit and dispersed cable trays	Acceptable

(6) Detection Provided—Class A supervised rate compensated thermal detectors. The detection system is a cross zoned system requiring two detectors, one in each zone to sense fire before initiating the suppression system.

Manual alarm pull station at C-R J.8-1.9 at elevation 12.3m and K.4-4.0 at elevation 20.3m.

(7) Suppression Available:

Type	Location/Actuation
Standpipe and hose reel	C-R J.8-1.9 at El. 12.3m and K.4-4.0 at El. 20.3m/Manual
ABC hand extinguishers	C-R J.8-1.8 at El. 12.3m and K.4-3.9 at El. 20.3m/Manual

(8) Fire Protection Design Criteria Employed:

(a) Fire detection and suppression capability is provided and accessible.

(b) Fire stops are provided for penetrations through rated fire barriers.

(9) Consequences of Fire—Postulated fire assumes loss of function. Smoke from a fire would be removed by the normal HVAC System.

(10) Consequences of Fire Suppression—Suppression extinguishes the fire. Refer to Section 3.4, “Water Level (Flood) Design,” for the drain system.

(11) Design Criteria Used for Protection Against Inadvertent Operation, Careless Operation or Rupture of the Suppression System:

(a) Location of the manual suppression system external to the room

(b) No floor mounted equipment

(c) Refer to Section 3.4, “Water Level (Flood) Design,” for the drain system.

(12) Fire Containment or Inhibiting Methods Employed:

(a) Fire stops are provided for penetrations through fire rated barriers.

(b) The means of fire detection, suppression and alarming are provided and accessible.

(13) Remarks:

(a) The following safety-related equipment representing all four safety divisions are mounted in the steam tunnel:

(i) E31-TE021-029 A-D

(b) Section 9A.5. Special Cases, provides justification for locating equipment from multiple safety divisions on this floor of the turbine building.

(c) Electrical cable insulation in conduit does not represent a combustible fire load.

9A.4.3.3 Floor Three El 20.3m

9A.4.3.3.1 Floor Three (Except Fire Areas FT1501, FT3500 and FT3501)

(1) Fire Area—FT1500

(2) Equipment: See Table 9A.6-4

Safety-Related	Provides Core Cooling
Yes	No

(3) Radioactive Material Present—None that can be released as a result of fire.

(4) Qualification of Fire Barriers—With the exception of the walls common to the lube oil reservoir area (Rm 330), the stair towers (Rms 122, 212, 236, and 249), the gas turbine generator (Rm 317), the switchgear “B” area (Rm 310), the elevator No.1 (Rm 115), and the auxiliary boiler area (Rm 247) the walls are within the fire area FT1500 and are not required to served as fire barriers. The floor and the ceiling are concrete, but are not required to serve as fire barriers.

There are several ways to access this floor within the turbine building:

(a) Room 122 provides access from all three floors.

(b) Rooms 212, 236, and 249 provide access only from the second and fourth floors.

These stair towers are for floor to floor personnel entry and egress within the turbine building and are required to serve as fire barriers for personnel protection. Each stair tower is provided with a 1 h rated fire-resistive door at each floor elevation.

Elevator No. 2 (Rm 250) provides access to this fire area from the second and fourth floor.

(5) Combustibles Present:

Fire Loading	Total Heat of Combustion (MJ)
(a) Cable in conduit and dispersed cable trays	Acceptable
(b) Limited quantities of lubricants in pumps	Negligible

(6) Detection Provided—Class A supervised POC on the floor and manual alarm pull stations at C-R A.7-1.9, C.7-6.9, E.3-1.9, G.5-6.9, J.8-1.9, K.4-5.8, K.1-4.0.

(7) Suppression Available:

Type	Location/Actuation
Standpipe and hose reel	C-R A.7-1.9, C-R C.7-6.9. C-R E.3-1.9, C-R G.5-6.9 C-R J.8-1.9, C-R K.4-5.8 C-R K.1-4.0/Manual
ABC hand extinguishers	C-R A.9-1.9, C-R C.6-6.9. C-R E.4-1.9, C-R G.9-6.9 C-R J.5-1.9, C-R K.0-5.7 C-R K.1-3.8/Manual
Closed head water sprinkler system, 6.1 L/min/m^2 coverage	Rm 321/Automatic
Deluge sprinkler system, 7.625 liters/m^2 coverage	Portion of Rm 320 (over the Hydrogen seal oil area)/Automatic

(8) Fire Protection Design Criteria Employed:

(a) Fire detection and suppression capability is provided and accessible.

(b) Fire stops are provided for penetrations through rated fire barriers.

(9) Consequences of Fire—Postulated fire assumes loss of function. Smoke from a fire would be removed by the normal HVAC System, except for the following rooms:

(a) Rooms 314, 315, and 344 by normal HVAC and process exhaust.

(b) Rooms 311, 333, and 345 by process exhaust.

(10) Consequences of Fire Suppression—Suppression extinguishes the fire. Refer to Section 3.4, "Water Level (Flood) Design," for the drain system.

(11) Design Criteria Used for Protection Against Inadvertent Operation, Careless Operation or Rupture of the Suppression System:

(a) Provision of raised supports for the equipment

(b) Refer to Section 3.4, "Water Level (Flood) Design," for the drain system.

(12) Fire Containment or Inhibiting Methods Employed:

(a) Fire stops are provided for penetrations through fire rated barriers.

(b) The means of fire detection, suppression and alarming are provided and accessible.

(13) Remarks:

(a) The following safety-related equipment representing all four safety divisions is mounted on this floor:

B21-PT028 A-D

C71-PS001 A-D

C71-PS004 A-D.

(b) Section 9A.5. Special Cases, provides justification for locating equipment from multiple safety divisions on this floor of the turbine building.

(c) Electrical cable insulation in conduit does not represent a combustible fire load.

(d) The total flow of the deluge sprinkler system which provides coverage over the Hydrogen seal oil area is estimated to be 20.19 L/s.

9A.4.3.3.2 Switchgear "B" Area (Rm No. 310)

(1) Fire Area—FT1501

(2) Equipment: See Table 9A.6-4

Safety-Related	Provides Core Cooling
No	No

(3) Radioactive Material Present—None that can be released as a result of fire.

(4) Qualification of Fire Barriers—With the exception of the walls common to the gas turbine generator area (Rm 317), the turbine building corridor (Rm 313), the stair towers (Rms 114, and 212), and the elevator No.2 (Rm 250), the walls are within the fire area FT1501 and are not required to served as fire barriers. The floor and the ceiling are concrete but are not required to serve as fire barriers. There are two doors within this room

(a) A 2 hour rated fire-resistive door which provide access to this room from the stair tower (Rm 114).

(b) A 3 hour fire-resistive door which provides access to the gas turbine generator room (Rm 317). Also, elevator No.1 (Rm 115) provides access from first, second, and fourth floor to this room.

(5) Combustibles Present:

Fire Loading	Total Heat of Combustion (MJ)
(a) Cable in conduit	Acceptable
(b) Cable trays	1454 MJ/m^2 ECLL (1454 MJ/m^2 maximum average) applies

(6) Detection Provided—Class A supervised POC on the floor and manual alarm pull stations at C-R G.1-0.5, K.5-0.5.

(7) Suppression Available:

Type	Location/Actuation
Standpipe and hose reel	C-R G.1-0.5, C-R K.5-0.5/Manual
ABC hand extinguishers	C-R G.1-0.4, C-R K.7-0.4/Manual

(8) Fire Protection Design Criteria Employed:

(a) Fire detection and suppression capability is provided and accessible.

(b) Fire stops are provided for penetrations through rated fire barriers.

(9) Consequences of Fire—Postulated fire assumes loss of function. Smoke from a fire would be removed by the normal HVAC System.

(10) Consequences of Fire Suppression—Suppression extinguishes the fire. Refer to Section 3.4, "Water Level (Flood) Design," for the drain system.

(11) Design Criteria Used for Protection Against Inadvertent Operation, Careless Operation or Rupture of the Suppression System:

(a) Provision of raised supports for the equipment

(b) Refer to Section 3.4, "Water Level (Flood) Design," for the drain system.

(12) Fire Containment or Inhibiting Methods Employed:

(a) Fire stops are provided for penetrations through fire rated barriers.

(b) The means of fire detection, suppression and alarming are provided and accessible.

(13) Remarks—Electrical cable insulation in conduit does not represent a combustible fire load.

9A.4.3.3.3 Gas Turbine Generator Area (Rm No. 317)

(1) Fire Area—FT3500

(2) Equipment: See Table 9A.6-4

Safety-Related	Provides Core Cooling
No	No

(3) Radioactive Material Present—None that can be released as a result of the fire.

(4) Qualification of Fire Barriers—The walls (except the north side wall), the floor, and the ceiling are fire barriers and they are of 3 h fire-resistive concrete construction. There is a 3 h fire rated door which provides entrance to this room from the switchgear "B" area (Rm 310). All personnel entry and egress is by this single path.

(5) Combustibles Present:

Fire Loading	Total Heat of Combustion (MJ)
Diesel fuel contained in system piping	None (without leaks)

(6) Detection Provided—Class A supervised rate compensated thermal detectors. The detection system is a cross zoned system requiring two detectors, one in each zone, to sense fire before initiating the suppression system.

Manual alarm pull station at C-R G.1-0.5 in Rm 310.

(7) Suppression Available:

Type	Location/Actuation
Standpipe and hose reel	C-R G.1-0.5/Manual
ABC hand extinguishers	C-R G.1-0.4/Manual
Deluge foam water sprinkler system, 6.1 L/min/m^2 coverage	Initiated by two detectors, one per zone/Automatic

(8) Fire Protection Design Criteria Employed:

(a) Fire detection and suppression capability is provided and accessible.

(b) Fire stops are provided for penetrations through rated fire barriers.

(9) Consequences of Fire—Postulated fire assumes loss of function. Smoke from a fire would be removed by the process exhaust system.

(10) Consequences of Fire Suppression—Suppression extinguishes the fire. Refer to Section 3.4, "Water Level (Flood) Design," for the drain system.

(11) Design Criteria Used for Protection Against Inadvertent Operation, Careless Operation or Rupture of the Suppression System:

(a) Location of the manual suppression system external to the room

(b) Provision of raised supports for the equipment

(c) Refer to Section 3.4, "Water Level (Flood) Design," for the drain system.

(d) Cross zoned detectors for initiation of deluge system

(12) Fire Containment or Inhibiting Methods Employed:

(a) Fire stops are provided for penetrations through fire rated barriers.

(b) The means of fire detection, suppression and alarming are provided and accessible.

(13) Remarks—None.

9A.4.3.3.4 Oil Reservoir Area (Rm No. 330)

(1) Fire Area—FT3501

(2) Equipment: See Table 9A.6-4

Safety-Related	Provides Core Cooling
No	No

(3) Radioactive Material Present—None that can be released as a result of the fire.

(4) Qualification of Fire Barriers—The walls, the floor, and the ceiling are fire barriers and they are of 3 h fire-resistive concrete construction. There is a 3 h fire rated door which provides entrance to this room from the corridor (Rm 332). All personnel entry and egress is by this single path. The room is a tub type room designed to contain spillage of the entire oil content of the equipment in the room.

(5) Combustibles Present:

Fire Loading	Total Heat of Combustion (Btu)
3785 liters of Class III B lube oil	158,261 MJ

(6) Detection Provided—Class A supervised rate compensated thermal detectors. The detection system is a cross zoned system requiring two detectors, one in each zone, to sense fire before initiating the suppression system.

Manual alarm pull station at C-R K.4-5.8 in the corridor (Rm 332)

(7) Suppression Available:

Type	Location/Actuation
Standpipe and hose reel	C-R K.4-5.8/Manual
ABC hand extinguishers	C-R K.0-5.7/Manual
Deluge foam water sprinkler system, 6.1 L/m^2 coverage	Initiated by two detectors, one per zone/Automatic

(8) Fire Protection Design Criteria Employed:

(a) Fire detection and suppression capability is provided and accessible.

(b) Fire stops are provided for penetrations through rated fire barriers.

(9) Consequences of Fire—Postulated fire assumes loss of function. Smoke from a fire would be removed by the process exhaust system.

(10) Consequences of Fire Suppression—Suppression extinguishes the fire. Refer to Section 3.4, “Water Level (Flood) Design,” for the drain system.

(11) Design Criteria Used for Protection Against Inadvertent Operation, Careless Operation or Rupture of the Suppression System:

(a) Location of the manual suppression system external to the room

(b) Provision of raised supports for the equipment

(c) Refer to Section 3.4, “Water Level (Flood) Design,” for the drain system.

(d) Cross zoned detectors for initiation of deluge system

(12) Fire Containment or Inhibiting Methods Employed:

(a) Fire stops are provided for penetrations through fire rated barriers.

(b) The means of fire detection, suppression and alarming are provided and accessible.

(13) Remarks—The deluge foam water sprinkler system is designed to suppress any fire in this room.

9A.4.3.4 Floor Four El 30.3m

(1) Fire Area—FT1500

(2) Equipment: See Table 9A.6-4

Safety-Related	Provides Core Cooling
Yes	No

(3) Radioactive Material Present—None that can be released as a result of fire.

(4) Qualification of Fire Barriers—With the exception of the walls common with the stair towers (Rms 122, 114, 212, 236, and 249), and portion of the walls common to elevator room 115, the walls are within the fire area FT1500 and are not required to serve as fire barriers. The ceiling is concrete and it is not required to serve as a fire barrier. The ceiling over the T/B and R/B HVAC intake areas (Rm 411 and 443) are at elevation 38.75m. The ceiling over the T/B and R/B HVAC exhaust areas (Rm 412 and 445) are at elevation 47.75m. The ceiling for the remaining floor area is at elevation 54.25m. The following portions of the floor are of 3 hr. fire-resistive concrete construction.

(a) Room 430 (over the lube oil reservoir, Rm 330)

(b) The roof of the house boiler area (Rm 247)

(c) The roof of the gas turbine generator area (Rm 248)

The remaining portion of the floor is concrete and is not required to serve as a fire barrier.

There are several ways to access this floor within the turbine building:

(a) Room 122 provides access from all three floors.

(b) Rooms 212, 236, and 249 provide access only from the second and third floors.

These stair towers are for floor to floor personnel entry and egress within the turbine building and are required to serve as fire barriers for personnel safety. Each stair tower is provided with a 1 h rated fire-resistive door at each floor elevation.

Elevator No.1 (Rm 115) provides access to T/B HVAC intake area from the switchgear A and B areas, and the air compressor and dryers area via a 3 h rated fire-resistive door. Elevator No.2 (Rm 250) provides access from the second and third floors to the operating floor and the R/B HVAC exhaust area.

(5) Combustibles Present:

Fire Loading	Total Heat of Combustion (MJ)
(a) Cable in conduit and dispersed cable trays	Acceptable
(b) Limited quantities of lubricants in pumps	Negligible

(6) Detection Provided—Class A supervised POC on the floor and manual alarm pull stations at C-R D.9-2.4, C.8-3.9, C.9-6.4, H.1-3.7, H.1-6.4, J.5-2.8.

(7) Suppression Available:

Type	Location/Actuation
Standpipe and hose reel	C-R D.9-2.4, C-R C.8-3.9 C-R C.9-6.4, C-R H.1-3.7 C-R H.1-6.4, C-R J.5-2.8/Manual
ABC hand extinguishers	C-R D.9-2.5, C-R C.8-4.1 C-R C.9-6.6, C-R H.1-3.5 C-R H.1-6.5, C-R J.2-2.8/Manual

(8) Fire Protection Design Criteria Employed:

(a) Fire detection and suppression capability is provided and accessible.

(b) Fire stops are provided for penetrations through rated fire barriers.

(9) Consequences of Fire—Postulated fire assumes loss of function. Smoke from a fire would be removed by the normal HVAC System.

(10) Consequences of Fire Suppression—Suppression extinguishes the fire. Refer to Section 3.4, “Water Level (Flood) Design,” for the drain system.

(11) Design Criteria Used for Protection Against Inadvertent Operation, Careless Operation or Rupture of the Suppression System:

(a) Provision of raised supports for the equipment

(b) Refer to Section 3.4, "Water Level (Flood) Design," for the drain system.

(12) Fire Containment or Inhibiting Methods Employed:

(a) Fire stops are provided for penetrations through fire rated barriers.

(b) The means of fire detection, suppression and alarming are provided and accessible.

(13) Remarks:

(a) The following safety-related equipment representing all four safety divisions is mounted on this floor:

(i) C71-PS003 A-D.

(b) Section 9A.5. Special Cases, provides justification for locating equipment from multiple safety divisions on this floor of the turbine building.

(c) Electrical cable insulation in conduit does not represent a combustible fire load.

9A.4.4 Service Building

9A.4.4.1 General

The service building does not contain any system or function that could affect the safe, cold shutdown of the reactor. Therefore, a detailed, room-by-room fire hazard analysis is not performed. The basic fire protection features are presented in a method similar to that used in a room-by-room analysis.

9A.4.4.2 Facility Features

The service building is a completely separate non-seismic structure, but since it houses the main security entrance to the facility, it has controlled access tunnels to the Control Building, the Turbine building and the Reactor Building. The exterior wall facing these buildings is constructed of 3-h fire-resistive concrete. The controlled access doors on this wall are 3 h fire-resistive, A-label doors. Other exterior walls are constructed of concrete, or of gypsum board mounted on metal studs. The four-story stairwell between ground grade (El. 7350m) and El. −7100m, which resides near the center of the building, is considered a separate fire area and is bounded by 2 h rated barrier walls in accordance with NFPA-101.

Due to possible variations of the fire loading with time within the building the facility is fully equipped with an automatic wet pipe sprinkler system combined with standpipes, hose systems and portable extinguishers throughout its interior.

9A.4.4.3 Fire Detection

Fire detection is provided throughout the facility with the use of Class A supervised POC detection systems. Alarms, both trouble and fire, annunciate in the main security center. Fire alarms sound throughout the service building. Manual fire alarm pull boxes are located at each fire hose and at extinguisher stations.

9A.4.4.4 Fire Suppression Systems

Fire Suppression systems include:

(1) NFPA 13, automatic wet pipe sprinklers provided in all areas within the building. The design criteria for the systems are a minimum water density of 6.1 L/m^2, with a maximum coverage of 9.29 m^2 per sprinkler head. Water flow alarms are provided.

(2) NFPA 14, Standpipes (6.35 cm pipe with 3.81 cm adapter) with 30.48 m of 3.81 cm woven-jacket lined fire hose nozzle located so that each room is less than 30.48 m from a hose station. Standpipe/hose stations are also provided adjacent to the stairwell of every other floor.

(3) ABC hand extinguishers provided on each floor of the facility, located at or near the hose stations and alarm pull boxes. Additional hand extinguishers are provided in various locations for convenience, or where increased human activity is anticipated.

9A.4.4.5 Penetrations

Wall, floor and ceiling penetrations for piping, HVAC and cable trays are sealed, as needed, for HVAC control. However, fire dampers or stops are not provided as the nature of the activities within the building, coupled with the complete sprinkler coverage, precludes the need to provide multiple fire areas within the building.

9A.4.4.6 Consequences of Suppression

Floor drains are provided. Passage to other buildings is via controlled access chambers having normally closed doors. Minor leakage under the doors will be well within the capacity of the floor drain systems of the other buildings. Also, in the adjoining buildings, additional water-tight boundaries (i.e., the 3-hour fire rated walls and doors) separate the nuclear safety-related equipment from the hallways common to the service

building access chambers. Raised pads for equipment and curbs are provided to control and confine water to specific areas.

9A.4.5 Radwaste Building

9A.4.5.1 General

The radwaste building does not contain any system or function that could affect the safe, cold shutdown of the reactor. Therefore, a detailed, room-by-room fire hazard analysis is not required. The basic fire protection features are presented in a method similar to that used in a room-by-room analysis.

9A.4.5.2 Facility Features

The radwaste building has 2-h fire-resistive concrete and metal stud/gypsum interior walls. Ceilings above areas where dry radioactive materials (or other burnable materials) are stored or processed are also constructed of 2 h (minimum) fire-restrictive concrete. Interior doors have fire-restrictive ratings of 1-1/2 hr, some of which are fitted with 1-1/2 h fire dampers for room ventilation intake. Exterior doors are 2 h fire-restrictive doors, or, they are required to be of special design, analyzed to have a fire resistance equivalent, to a 2 h rating. The radwaste building is not contiguous with any other structure.

9A.4.5.3 Fire Detection

Fire detection is provided throughout the facility with the use of Class A supervised product-of-combustion (POC) detection systems. Alarms, both trouble and fire, report to the radwaste control room. Fire alarms are sounded throughout the building. Manual fire alarm pull boxes are located at each fire hose and at extinguisher stations.

9A.4.5.4 Fire Suppression Systems

Fire suppression systems include:

(1) NFPA 13, automatic wet pipe sprinklers provided in areas where dry radioactive waste, or other flammable material, is processed or stored. The design criteria for the systems are a minimum water density of 6.1 L/m^2, with a maximum coverage of 9.29 m^2 per sprinkler head. Water flow alarms are provided.

(2) NFPA 14, Standpipes (6.35 cm pipe with 3.81 cm adapter) with 30.48 m of 3.81 cm woven-jacket lined fire hose and nozzle located so that each room is less than 30.48 m from a hose station. Water flow alarms are provided.

(3) ABC hand extinguishers provided on each floor of the facility, located at or near the hose stations and alarm pull boxes.

9A.4.5.5 Penetrations

Wall, floor and ceiling penetrations for piping, HVAC and cable trays are fitted with fire-stops or fire dampers with the same fire-resistance rating as the wall, floor and ceiling. Since radioactive materials are processed, many of the walls are much thicker than an equivalent fire wall thickness for shielding purposes.

9A.4.5.6 Consequences of Suppression

Floor drains are provided with sufficient capacity for fire-water run-off. Raised pads for equipment and curbs are provided to control and confine water to specific areas.

9A.4.6 Plant Yard

(1) Space—Plant Site External to the Buildings

Fire Area—yard

(2) Equipment: See Figure 9.5-4

(3) Radioactive Material Present:

None that can be released as a result of fire.

(4) Qualification of Fire Barriers—The exterior walls of the safety-related buildings are required to have a fire resistance rating of 3 hours. The diesel oil storage tanks are buried. The dirty and clean turbine lubrication oil tanks are located next to the turbine building, away from the reactor building. Shadow type fire walls are provided between the unit auxiliary transformers and main transformer. These transformers are located more than 15.2 m away from the turbine building walls.

(5) Combustibles Present:

Fire Loading	Total Heat of Combustion (MJ)
(a) Clean lube oil (7568 liters)	3.2×10^6
(b) Dirty lube oil (7568 liters)	3.2×10^6
(c) Main transformer oil	Unknown quantity
(d) Unit auxiliary transformer oil	Unknown quantity

Fire Loading	Total Heat of Combustion (MJ)
(e) Reserve transformer oil	Unknown quantity
(f) Three buried D/G oil tanks	Buried tanks fuel are not contributor to fuel loading

(6) Detection Provided—Temperature and flame detectors as part of the suppression system for the outdoor transformers. Flame detectors for the turbine lubrication oil tanks. Manual alarm pull stations adjacent to the main power, unit auxiliary and reserve transformers.

(7) Suppression Available:

Type	Location/Actuation
Outdoor hydrants	See Figure 9.5-5/Manual
Deluge water spray systems	For the main power, unit auxiliary and reserve transformers/Automatic

(8) Fire Protection Design Criteria Employed:

(a) Fire detection and suppression capability is provided and accessible.

(b) Redundant equipment is separated by distance or shadow fire barrier walls.

(9) Consequences of Fire—The postulated fire assumes loss of the function in the fire affected zone. Exposed equipment is not safety-related. Loss of some equipment could cause initiation of a plant shutdown.

(10) Consequences of Fire Suppression—extinguishes the fire. Refer to Section 3.4, “Water Level (Flood) Design,” for the drain system.

(11) Design Criteria Used for Protection Against Inadvertent Operation, Careless Operation or Rupture of the Suppression System:

(a) No exposed safety-related equipment; and

(b) Fire protection water from a ruptured storage tank would drain away from the safety-related buildings via the normal storm drainage system.

(12) Fire Containment or Inhibiting Methods Employed:

The means of fire detection, suppression and alarming are provided and accessible.

(13) Remarks—None.

The following figures are located in Chapter 21:

Figure 9A.4-1 Reactor Building Fire Protection at El. -8200 mm

Figure 9A.4-2 Reactor Building Fire Protection at El. -1700 mm

Figure 9A.4-3 Reactor Building Fire Protection at El. 4800/8500 mm

Figure 9A.4-4 Reactor Building Fire Protection at El. 12300 mm

Figure 9A.4-5 Reactor Building Fire Protection at El. 18100 mm

Figure 9A.4-6 Reactor Building Fire Protection at El. 23500 mm

Figure 9A.4-7 Reactor Building Fire Protection at El. 27200 mm

Figure 9A.4-8 Reactor Building Fire Protection at El. 31700/38200 mm

Figure 9A.4-9 Reactor Building Fire Protection at Section A-A

Figure 9A.4-10 Reactor Building Fire Protection at Section B-B

Figure 9A.4-11 Control Building Fire Protection, Section B-B

Figure 9A.4-12 Control Building Fire Protection at El. -8200 mm

Figure 9A.4-13 Control Building Fire Protection at El. -2150 mm

Figure 9A.4-14 Control Building Fire Protection at El. 3500 mm

Figure 9A.4-15 Control Building Fire Protection at El. 7900 mm

Figure 9A.4-16 Control Building Fire Protection at El. 12300 mm

Figure 9A.4-16a Control Building Fire Protection at El. 17150 mm

Figure 9A.4-16b Control Building Fire Protection at El. 21600 mm

Figure 9A.4-17 Turbine Building Fire Protection, Section A-A

Figure 9A.4-18 Turbine Building Fire Protection at El. 5300 mm

Figure 9A.4-19 Turbine Building Fire Protection at El. 12300 mm

Figure 9A.4-20 Turbine Building Fire Protection at El. 20300 mm

Figure 9A.4-21 Turbine Building Fire Protection at El. 30300 mm

Figure 9A.4-22 Service Building Fire Protection, Section B-B (See Figure 9A.4-11)

Figure 9A.4-23 Service Building Fire Protection at El –2150 mm (See Figure 9A.4-13)

Figure 9A.4-24 Service Building Fire Protection at El 3500 mm (See Figure 9A.4-14)

Figure 9A.4-25 Service Building Fire Protection at El 7900 mm (See Figure 9A.4-15)

Figure 9A.4-26 Service Building Fire Protection at El 12300 mm (See Figure 9A.4-16)

Figure 9A.4-27 Service Building Fire Protection at El 17150 mm (See Figure 9A.4-16a)

Figure 9A.4-28 Radwaste Building Fire Protection, Section A-A

Figure 9A.4-29 Radwaste Building Fire Protection at El –1500 mm

Figure 9A.4-30 Radwaste Building Fire Protection at El 4800 mm

Figure 9A.4-31 Radwaste Building Fire Protection at El 12300 mm

Figure 9A.4-32 Radwaste Building Fire Protection at El 21000 mm

9A.5 Special Cases

9A.5.1 Piping Penetrations, Reactor Building

Piping penetrations through the drywell shell have unique design considerations. The stress and containment requirements along with the temperature inputs to the concrete walls leave little design latitude. Experience has shown that some of these penetrations for high energy piping may not contain a 3-hr fire-resistive barrier such as have provided throughout the other ABWR buildings. Penetration details are not available at this stage of the plant design. It is a COL license information requirement that the detailed design provide completely equivalent construction to tested wall assemblies or testing will be required.

9A.5.2 Fire Door Deviations

The design of the nuclear facility must meet many criteria, including fire resistivity. Fire doors are an example of compromise with other overriding design criteria that must also be met. Some, such as the airlock doors between the lock and the Reactor Building, form part of a pressure vessel and are of special construction. Such doors generally have a backup fire door.

9A.5.3 Charcoal Filters for Process Tanks and Drain Sumps

Several tanks and sumps are fitted with small charcoal canister-type filters to adsorb radioactive halogens and particulates that may be in the gases vented from the tank during filling or draining operations. Vents from the individual filters and tanks with low level radioactivity are ducted to the HVAC exhaust system.

Temperature monitoring and automatic or manually actuated fixed fire suppression systems have not been provided for these filters. Valves cannot be installed in the lines to isolate the filters as valve closure would result in pressure gradients that could cause tank or sump failure. Manual fire suppression systems are available at or nearby each filter.

9A.5.4 Pipe Break Analyses

Per the criteria in Section 3.6, the high pressure fire water systems require analysis for high energy and moderate lines, respectively.

9A.5.5 Fire Separation for Divisional Electrical Systems

There are some cases where cables of more than one division are in relatively close proximity and require special justification. These areas are listed below and justification of each is evaluated in the discussion.

9A.5.5.1 RPS Scram Circuits

Wiring to each of the four groups of scram solenoids is run in separate rigid steel conduits for the purpose of preventing any possibility of the scram solenoid circuits being exposed to a "hot" short (i.e., two energized switch legs of different group circuits shorted together that could negate the scram command to more than one group of control rods). The conduits do not require other special separation. Overheating of the conductors, as by fire, cannot cause an unsafe failure because solenoids can be de-energized by shorts to ground or between conductors without creating an unsafe condition.

The AO Scram Solenoid valves are part of the HCU assemblies (two solenoids per valve). They are safety related and receive their divisional power (Division 2 or 3) from RPS via the Scram Solenoid Fuse Panels (H22-PO55 A-H). The fuse panels are located in rooms 111, and 118 (Div. I), 125, and 129 (Div. II). The Div. I rooms are located in separate fire zones from the Div. II rooms, which zones are separated by 3-hour fire barriers. Fire in any of these rooms could cause a short on the cables feeding power to the scram solenoids and cause the associated fuse in the scram solenoid fuse panel to blow. The fault will be limited to the loss of power to the associated solenoid and will not propagate upstream.

Divisions I and IV pressure transmitters which monitor control rod drive charging header pressure are located in the HCU unit room which contains the HCUs for Divisions I and IV. Corresponding Divisions II and III transmitters are located in the Divisions II and III HCU unit room. Each divisional cable is individually contained in steel conduit. Shorts or grounds postulated to occur on these cable will not affect the upstream power division because of the current limiting capability inherent in the low voltage power supplies which feed the transmitters. Therefore, postulated multi-divisional shorts or grounds on these cables, due to fire in one of the HCU rooms, will not cause an unsafe condition.

The air header dump valves act as a diverse backup to the scram logic and are not essential to safety. The two air header dump valves are energized by separate divisions of 125 VDC power. Power wiring to each solenoid is individually circuit-protected and run in separate steel conduit. Therefore, loss of these solenoids, due to fire, will not cause an unsafe condition.

Sensors from the Reactor Protection System (RPS) and the Main Steam Isolation Valve (MSIV) System (via leak detection system) are located in the turbine building.

Due to the nature of the design and construction of the turbine building (not a seismic category or a Class 1E safety-related area) it is possible for all of the sensors and their leads to be damaged during seismic or fire events in the turbine building. This has the potential for affecting the operation of the RPS and MSIV systems and, also, for

simultaneously introducing faults and their attendant threats to the power supplies in multiple divisions.

The sensors, type, and system served are:

Description		Type	System
Turbine First Stage Press.	Transmitter	RPS	C71-PT003A-D
Hydraulic Trip Sys. Oil Press.	Transmitter	RPS	C71-PS302A-D
Turbine Stop Valve Pos.	Position Switch	RPS	C71-POS301A-D
Condenser Press.	Transmitter	MSIV	B21-PT301A-D
Main Steam Line Press.	Transmitter	MSIV	B21-PT028A-D

In considering the effect of multiple failures in the turbine building on the operation of the systems, the lack of an RPS trip is acceptable because an RPS backup trip would be generated by high reactor vessel pressure or high flux. Backup trips for MSIV isolation, either direct or indirectly through the RPS, would be generated by the turbine control system, turbine building high temperature, and turbine building high radiation. The turbine building trips are anticipatory but are not absolutely required. Initial tripping by the backups is acceptable.

Tripping of the RPS or MSIV systems as a result of multiple failures in the turbine building is also acceptable. If a turbine building event is so wide ranging that it affects multiple divisions, the reactor should be shut down. The two out of four logic of the systems eliminates trips from minor events.

The manner in which the RPS, MSIV, and power supply systems are designed and installed assures that any combination of electrical failures as a result of occurrences in the turbine building are acceptable. This is true for the position switch circuits because they are hard wired to the solid state logic control (SSLC) cabinet in the control room. Each wire is routed in a separate grounded conduit from the control building to the turbine building as shown in Figure 9A.5-1. The power source is ungrounded 125 VDC with safety grade ground detection. A single ground in the turbine building does not produce any fault current, cause any RPS action, nor prevent tripping if a position switch contact opens. A double ground with one ground on the supply lead and the other ground on the return lead does not produce any fault current or cause any RPS action, but it does prevent sensing of the opening of the switch contact, which is acceptable as explained above.

There must be a ground on the ground fault monitored negative side of the battery in the safety related buildings for fault current to flow due to grounds in the turbine building. The negative side of the safety-related batteries does not enter the turbine building where it would be exposed to possible simultaneous multiple failures.

In addition, for the effects of the double failure of a fault in the turbine building concurrent with a ground on the negative side of the safety-related battery (first random failure) to precipitate back into the 125 VDC system, the safety related fuse in the SSLC cabinet must fail to clear the fault (second random failure). Thus, the initiating event in the turbine building plus two random failures of safety-related equipment in the reactor or control buildings must occur to spread the consequence of the failure in the turbine building beyond the faulted RPS position switch circuit. This double random failure of safety-related equipment must occur in all three safe shutdown divisions to possibly prevent safe shutdown of the plant. Six simultaneous random failures is not credible.

For the pressure transmitters, the signals are low level analog current signals which are transmitted over a shielded twisted pair of conductors per transmitter. The cables are routed in separate grounded conduits on a divisional basis. Shorting together, shorting to ground, or opening a conductor in a current loop cable will only affect the instrument associated with the cable. No damage will occur or propagate as a result of these possible failures. The equivalent internal impedance of the trip unit power supply is sufficient to isolate any electrical condition in the current loop.

In summary, failure of the turbine building sensors and their cables in any fashion is acceptable from the standpoint of both the operation of the systems and disturbances and threats to the power supply systems.

9A.5.5.2 Main Steamline Radiation Monitor Detectors

These detectors are physically located in the steam tunnel near the main steamlines, just downstream of the outboard main steamline isolation valves.

By design, this area has no exposed combustibles. Additionally, the conduit and the detectors have some physical protection from the steam lines and hangers in the area making it improbable that fire from below could damage the redundant detectors or cable.

The radiation monitor trip devices have a downscale trip such that a downscale reading from the detectors will provide a trip. This trip is in addition to the normal upscale trip so that a failure in either direction will result in trip.

Leak detection temperature detectors of the main steamline LDS measure ambient temperature around the main steamlines and will provide a main steamline valve

isolation signal at fire-induced temperatures well below the threshold of damage to the radiation monitor cable. Furthermore, a common failure to all of the radiation monitor divisional cables can only affect the radiation monitors and not the remainder of the divisional equipment.

9A.5.5.3 Main Steamline ADS Relief Valves

The main steamline ADS relief valves each have three solenoid valve pilots in close proximity at the valve operator. Two of these are used by the ADS. One of the two ADS solenoids is Division 1. The other is Division 2. A third solenoid is used for the non-ADS high pressure relief function. This solenoid is powered by one of the four divisions, depending on the valve. If any solenoid becomes energized, the associated relief valve will open.

The Division 1 and 2 signal cables are run in separate conduit from their location on the valve to the appropriate divisional penetration and, from there, via divisional raceways to their multiplex interfaces.

These valves are located in a low fire loading area and are inaccessible during plant operation so that a transient fire loading cannot be introduced. Also, the containment is inerted during operation.

The conduit is arranged so that Division 1 and Division 2 cables leave the relief valve area in opposite directions.

The solenoid valve coils are located inside metallic enclosures on each valve so that a fire inside the coil compartment of one pilot would not influence the coil or cable of the redundant pilot.

The ADS valves are arranged in two groups of four valves each with adequate spatial separation to ensure that disturbances (i.e., fire, pipe rupture phenomena, falling objects) affecting one group will not affect the other group. For line breaks, requiring ADS for depressurization, the design assures that at least three of the eight valves are available. During operation, sustained fire is not possible in the inerted containment (drywell) area.

Electrically, the ADS logic system load drivers isolate the divisional signals from other components, in their respective division, so that any damage to the cable at the valves would be limited to that particular cable. Electrical arcing damage to a cable or solenoid coil cannot result in inadvertent opening of the main valve because shorts, opens or grounds at the solenoid cannot cause the solenoid to be energized. Short circuits at this location cannot jeopardize 1E power supplies because circuit resistance is sufficient to permit appropriate circuit protection coordination.

With this degree of redundancy, attention to design, electrical isolation, and primary containment inerting, plant safety will not be compromised by having the Division 1 and 2 cables in close proximity at the ADS valves.

9A.5.5.4 Main Steamline Isolation Valve Control and Limit Switch Interfaces

There are eight MSIVs utilized for isolating the main steamlines, two in each of four main steamlines. The outboard MSIV on each main steamline is located outside the primary containment in the main steam tunnel to the turbine building. The inboard MSIV on each line is located inside the inerted drywell.

The steamlines are arranged so that none of the valves is located vertically above any other MSIV. The electrical connections to each valve are made in two junction boxes (A, B).

Valve limit switch junction box A—located on one side of the valve operating mechanism and oriented across the valve operator below box B—provides interlocking connections from valve limit switches to the RPS control logic for reactor scram, to the LDS MSIV control logic used during MSIV closure tests and to valve position indicating lights at the control room panel.

Pneumatic control junction box B, which is located on the control cylinder at the top of the valve operating mechanism, terminates the 120 VAC control voltage to the coils of the operating and test solenoid pilot valves. Two divisions of power terminate on the same device within the junction box. However, barriers are provided between the device terminations to assure circuit separation. In addition the cables for each division are individually fused, and have another level of circuit breaker protection before connection with the divisional power supply bus. These barriers and two levels of circuit protection assure the essential power busses are not jeopardized should shorts or grounds occur.

The MSIVs are designed to “fail safe” in that loss of power to both solenoids causes closure isolation. For both the inboard and outboard valves, Division II power actuates Solenoid 2 and Division I power actuates Solenoid 3. Solenoid 1 is the test solenoid and is powered By Division 1 (outboard) and Division II (inboard).

The appropriate division of power enters Box A of each valve for connection to limit switches which open when the MSIV closes to initiate a reactor scram trip signal to the divisional scram logic, and to stop MSIV closure during MSIV exciter tests.

In the case of the scram initiation function, the outboard valve limit switches provide redundant trip signals to the signals provided by the inboard valves on each logic.

The MSIVs and the 90% open (10% closure test) contacts and the 92% open (scram) contacts are classified as safety grade components and comply the with the separation

and isolation requirements of IEEE-279. The 4% open limit switch contact of each MSIV has no safety function and is used to provide position indication to the process computer and to indicator lights. Non-divisional power is utilized by this switch. A metallic barrier is provided between the Class 1E and the Non-Class 1E terminals.

The inboard MSIVs are contained within the inerted environment during reactor operation. Failure of the MSIV or its control and interlocking circuits that might occur by a postulated fire outside the primary containment cannot prevent closure of at least one of the MSIVs in each line.

The closure of one MSIV will not result in a reactor scram. Since the outboard valve scram signals are redundant to the inboard valves on each line, a fire outside the primary containment will not affect the redundant capability to cause scram.

9A.5.5.5 Under the Reactor Vessel

This area contains the following electrical cables: rod control and information system (RCIS) cabling, FMCRD separation switch cables, neutron monitor system cabling, and other cables, as required. During reactor operation, the area cannot sustain fire because it is inerted. All cables from the lower drywell are routed up to the upper drywell via interconnecting risers. Conduit, rigid and flexible is used within the risers.

(1) **RCIS Cables**

The RCIS cables are routed under the vessel through pull boxes inside the pedestal; then through cable boxes and raceways to electrical containment (RCCV) penetrations. RCIS hardwired cables are also routed from these containment penetrations to the RCIS reactor building panels, which are located in clean areas of the reactor building.

All RCIS cables (i.e., synchro cables, FMCRD brake and motor cables, reed switch rod position status cables) are contained in flexible metallic conduit under the vessel, arranged in the pull boxes mounted just above the CRD restraint structure. All of these RCIS cables are classified as non-safety.

(2) **FMCRD Separation Switch Cables**

The FMCRD cables for the Class 1E separation switches of each FMCRD are classified as safety related and separated into two groups (A and B) for routing out of the undervessel area to two separate divisions of the essential multiplexing system. The cables are routed under the vessel through pull boxes inside the pedestal; then through cable boxes and raceways to electrical containment (RCCV) penetrations. The separation switch cables are then routed from the containment penetrations to essential multiplexing system panels in the reactor building. The installation of these Class 1E cables is

arranged so that “A” and “B” cables travel in opposite directions from under the vessel and pass through penetrations on the opposite side of the reactor building.

The cables receive low-voltage (approx. 48 volts) power from the essential multiplex system power supplies. This provides natural circuit protection in event of shorts or grounds on the system. Such events would not jeopardize the integrity or independence of the higher voltage divisional power busses which are upstream of the power supplies.

(3) **LPRM Cables**

The LPRM cables are individually contained in flexible metallic conduit under the vessel.

These cables are divided into four divisions of cabling, corresponding to the four divisions of the reactor protection system.

The cabling is also supported on the control rod drive housing flanges. The cabling is routed along particular rows of housing flanges. The Division 1 and 3 cables are routed undervessel to the 0° to 180° half of the core, whereas Division 2 and 4 cables are routed undervessel to the 180° to 360° half of the core. The cabling is then routed through the pedestal and drywell in enclosed solid bottom cable tray in a manner which brings the Division 1 LPRM cables into the 0° to 90° quadrant of the lower drywell; Division 2 into the 180° to 270° quadrant; Division 3 into 90° to 180° quadrant; and Division 4 into the 270° and 360° quadrant. Once in the upper drywell, the cables continue in separated divisional cable raceways and penetrations.

(4) **SRNM Cables**

The cables for the SRNM/IRM detectors are individually contained in flexible metallic conduit. These cables are routed along with, and pass through, the same divisional penetrations with the LPRM cables.

(5) **Other Cables**

All other cables under the pedestal are classed as nondivisional. These cables are routed in rigid or flexible metallic conduit through nondivisional conduit openings in the pedestal wall to nondivisional cable raceways in the containment.

(6) **Fire Damage Analysis**

The containment is inerted during operation so that a fire would not be possible. Additionally the following things also tend to reduce the risk from a fire.

The cabling inside the flexible conduit for the RCIS system and for the neutron monitoring system are all low level signal cables and not likely to be involved in an electrically generated fire internal to the conduit. Even though such a fire is postulated, it would be contained in the individual conduit without damage to the surrounding conduit.

The nondivisional cabling in the conduit is low voltage, fault-protected cable and not likely to be involved in an electrically generated fire internal to the conduit.

The space under the reactor vessel is devoid of combustible material except for the cable insulation inside the various conduit.

It is an interface requirement that administrative procedures to control combustible materials be provided. These procedures will require that combustibles not be stored in areas with divisional cable or within electrical equipment areas.

Maintenance during reactor downtime might involve welding in the area under the vessel. It is an interface requirement that administrative procedures which will require special fire protection during the welding or other maintenance operations and housekeeping procedures be provided.

It is concluded that design features in the area under the vessel are adequate for protecting the redundant trains against damage by fire.

9A.5.5.6 Local Instrumentation and Control Equipment

Safety-related panels are generally designed and located to serve a single division. However, some local panels or instrumentation contain equipment of more than one division where operational considerations or instrument piping considerations dictate against location or separated structures. In such cases, spatially diverse equipment allows for the disabling of all equipment on a single panel or rack.

These multidivisional panels and racks are either divided internally into compartments, with barriers between the divisional equipment for separation, or the divisional components have separate metal enclosures and separate enclosed metallic raceways (conduit) to obtain effective physical isolation and low probability of disabling damage to the equipment from a fire generated internally or externally.

The incoming cables for each division are in separate conduit and, where possible, the conduit is embedded in concrete or separated by greater than 0.91 m horizontally, 1.52 m vertically.

Some room areas contain more than one division of instrumentation or other equipment which is needed to isolate redundant sets of isolation values, HVAC or for some other purpose requiring redundancy. Such instrumentation or equipment is identified in Table 9A.5-1.

9A.5.5.7 Leak Detection System

Ambient temperature or excessive process flow is measured to detect leakage of primary coolant into or within the below tabulated spaces.

Temperature sensors of redundant divisions are used in the spaces to detect leakage from the reactor coolant pressure boundary and to generate signals that are ultimately used to provide isolation closure signals to the containment isolation valves.

The following table indicates areas where redundant divisions of leak detection equipment are located:

Area Monitored	Division
MSL Pipe Tunnel	1,2,3,4
RHR Equipment Pump Room A	1,2
RHR Equipment Pump Room B	1,2
RHR Equipment Pump Room C	1,3
RCIC Equipment Area	1,2
CUW Heat Exchanger Rooms	1,2
CUW Pump Room 1	1,2
CUW Pump Room 2	1,2
CUW Valve Room	1,2
CUW Local Panels and Racks Area	1,2
Turbine Building (MSL area)	1,2,3,4

The Division 1 and 2 elements are located in separate temperature detector assemblies and the signal lead cables are brought out in separate rigid (or flexible) conduit. The sensors are located to sense ambient temperature within the listed areas.

Differential pressure detectors of redundant divisions are used to sense excessive flow (i.e., leakage) in process lines of the reactor water clean-up system.

The transmitters are located in separate enclosures and their connecting cables are housed in separate metal conduit. Shorting and/or grounding of these cables due to postulated fire would not jeopardize the emergency power busses because the low-voltage power supplies which feed the transmitters are current-limiting devices.

In event of fire in the spaces protected by temperature detection, it is expected that a signal will be generated by the ambient sensors at compartment temperatures well below the threshold of damage to equipment of either division. This signal would appear to the leak detection temperature sensor as a leak in the process piping or equipment within the compartment.

9A.5.5.8 Standby Liquid Control

The following SLC equipment is located in the same general area of the reactor building at the 11,582 mm level, azimuth (approximately) 250° (Division 2 general area) on a concrete slab outside the drywell:

Divisional Equipment	Designated Division
Pump C41-C001A	1
Pump C41-C001B	2
Injection Valve (MO) C41-F006A	1
Injection Valve (MO) C41-F006B	2
Suction Valve (MO) C41-F00l-A	1
Suction Valve (MO) C41-F001B	2
Control and Power Cabling to “A” Equipment	1
Control and Power Cabling to “B” Equipment	2

Nondivisional Equipment
Boron Storage Tank
Storage Tank Heating elements
Power Cabling for Storage Tank Heaters

The cabling is routed in separate conduit or trays for each division, separated from each other, to meet IEEE-384. Conduit will be embedded in concrete where feasible.

The electric drive motor and cabling for the redundant pumps are located more than 1.52 m apart. The injection valves and cabling are located more than 0.91 m apart centerline to centerline.

The control cables for Division 1 and 2 equipment are in separate conduit and separate from the power cables. The Division 1 power and control cabling is routed out of the Division 2 area to the Division 1 area by conduit embedded in the floor and wails.

Postulated fire damage to the electrical equipment in the SLC area could not inadvertently result in injection of boron because this can only be done by activation of a switch on the control room panel. Fire could damage the power cabling to the pump suction valves or to the pump motors preventing opening of valves or start of pump motors on command from the control room. However, the SLC equipment is not required for safe shutdown of the reactor, since it is redundant to the RPS.

9A.5.5.9 Flammability Control System

The flammability control system equipment is located in a large enclosed area at grade level at approximately 180 degrees azimuth. The rooms have a fire barrier floor and is completely surrounded by fire barrier walls and doors. There are large access doors to the outside at the centerline of the room.

The FCS is made up of two independent redundant divisions (Divisions 2 and 3), and each division is located in the fire area division 2 and 3 respectively. Each division has two suction isolation valves (inboard and outboard) and two return isolation valves (inboard and outboard). The inboard isolation valves are motor operated (MO) valves, and the outboard isolation valves are fail close (FC) air operated (AO) solenoid valves (two solenoids per valve). They are powered from division 1 and 4. Fire in either division may cause the inboard valves (Div. 2 or 3) to fail to operate, but the outboard isolation valves are still capable to isolate because they are powered from different divisions (Div. 1 and 4). Loss of a complete division is acceptable because FCS is made up of two independent redundant divisions mounted in two separated fire areas.

9A.5.5.10 Not Used

9A.5.5.11 Standby Gas Treatment System

The Standby Gas Treatment System consists of two totally independent and redundant divisional trains (Div. II and Div.III). Each divisional train has a filter train (consisting of the demister, an electronic process heater, prefilter, pre-HEPA filter, charcoal adsorber, a post-HEPA filter and space heaters), an exhaust fan and cooling fan. The two divisional trains occupy two separate rooms separated by a 3-hour fire barrier. Each divisional train exhaust is connected to the R/A exhaust duct and they are isolated by fire dampers.

9A.5.5.12 Fine Motion Control Rod Drive Motors

The power distribution for the FMCRD motors has been redesigned such that they are all powered from Division I, with a non-Class 1E backup power source. Therefore, a special case analysis is not required.

9A.5.5.13 Reactor Building Operating Deck Radiation Monitors

Radiation monitoring within this area is facilitated by two independent systems. The area radiation monitoring system and the process radiation monitoring system.

The area radiation monitoring (ARM) system is non-safety related and uses two radiation channels in the fuel storage and handling areas. It has no system actuation function, but is used for monitoring of background radiation and radiation resulting from accidental fuel drops. The sensors are mounted on the walls within the fire zone area. These detectors are designed to annunciate local and control room alarms for both high and low radiation conditions. The low condition is an indication of an inoperative radiation monitor. Loss of these detectors, due to fire, does not impact plant safety.

The process radiation monitoring (PRM) channels that are utilized in this area are safety related, and are used to perform isolation functions. The Geiger Mueller detectors are mounted in the reactor building ventilation system exhaust duct (Rm 643). They are safety related, and receive their power from a dual auctioneered class 1E divisional high voltage power supplies of the digital ARM (D11-Z602A-D Div, 1-4). Each divisional digital ARM output voltage is hard wired to its associated detector and it is limited to 700 VDC, and 3 ma current. Each divisional power cable is routed separately in separate metal conduit. A fire in the room can develop a short on any detector power cable/or all the detectors power cables. A series resistor has been placed in each channel of the auctioneer power supplies, therefore, current drain on the high voltage supply will be limited and the fault will not propagate any further. A short on a power cable shall generate a down scale inop trip alarm to the ARM control logic in the control room. The ARM control logic requires 2 out of 4 trip to initiate isolation of the

reactor building ventilation exhaust duct automatically. Although a fire could cause the system to issue an isolation signal due to its effect on the radiation detectors, the containment isolation valves can be manually reopened from the control room by the operator.

The Geiger Mueller detectors are mounted in the fuel handling exhaust radiation monitor area (Rms 716, 721, 733 and 742 respectively). They are safety related, and receive their power from a dual auctioneered class 1E divisional high voltage power supplies of the digital ARM (D11-Z602A-D Div. 1-4). Each divisional digital ARM output voltage is hard wired to its associated detector and it is limited to 700 VDC, and 3 ma current. Each divisional power cable is routed separately in separate metal conduit. A fire in any of the rooms can develop a short on a detector power cable. A series resistor has been placed in each channel of the auctioneered power supplies, the current drain on the high voltage supply will be limited and the fault will not propagate further. A short on power cable will generate a down scale inop trip alarm to the ARM control logic in the control room. The ARM control logic requires 2 out of 4 trip to initiate isolation of the fuel handling exhaust duct automatically. Therefore loss of one or all four divisional detectors in the area due to the fire is acceptable.

The PRM channels are designed such that any two-out-of-four signals, based on very high or very low radiation conditions within the HVAC duct, will initiate the standby gas treatment system (SGTS), isolate the HVAC for the reactor building secondary containment, and initiate closure of the containment vent and purge ducts. The very low radiation trip assures the safety action will be initiated in spite of sensor failure.

The four divisions of PRM sensors are located within close proximity to each other in order to provide true two-out-of-four actuation logic. The arrangement is justified by the automatic actuation of the system's safety function should two or more sensors fail and by the fact that the secondary containment isolation valves can be reopened from the control room by the operator.

9A.5.5.14 RHR Shutdown Cooling Outboard Isolation Valves

These motor operated valves are safety related. The valves from divisions 2, 3, and 1 are located in valve rooms 414, 421 and 431 (fire area divisions 1, 2 and 3), respectively. This divisionally pairs inboard to outboard valve pairs 2 to 1, 3 to 2, and 1 to 3. The inboard valves which are inaccessible during plant operation match the division of the line in which they are installed. If a division fails, the outboard valve of that division can be manually opened to place the non failed division in operation. For example, if division 3 fails, the division 3 outboard valve which is paired with the division 1 inboard valve can be manually opened to put the division 1 system into service.

From the standpoint of fire, a fire at the location of either an inboard or outboard valve would not prevent closure of the other valve of the pair. If the fire occurred in the valve

room, the inboard valve could be closed. If the fire occurred outside the valve room but inside of the secondary containment, it is possible that the power feeds to the outboard valve and the system which the valve was mounted in could both be disabled by the fire. Since the fire is not in the valve room, personnel could enter the valve room and manually close the valve.

9A.5.5.15 RCIC System

The RCIC main steam supply outboard isolation valve is a division 2 valve to provide redundancy to the inboard isolation valve. The division 2 outboard valve is located in the division 1 valve room. A fire in the valve room would not prevent closure of the inboard valve which is inside of the containment.

There are 4 safety related turbine exhaust diaphragm pressure transmitters (division 1 and 2) located in the division 1 RCIC room. The transmitters only serve a purpose when the turbine is operating. If a fire occurs the turbine would be shut down and loss of all 4 sensors would be acceptable.

9A.5.5.16 Containment Isolation Valves

The primary function of each isolation valve is to close to isolate primary containment when isolation is required. In general, outboard isolation valves are assigned to division 1 and inboard isolation valves to division 2. In some cases this results in division 1 outboard isolation valves being located in division 2 or 3 areas. This is acceptable from a functional standpoint because a fire in an area outside of containment and involving the penetration must be assumed to disable the system anyway, without regard to whether or not the outboard isolation valve is disabled. If the valve is open at the time of the fire it could fail in the open position and remain open but the inboard valve would not be involved in the fire and would close on demand. It is a requirement that cables for outboard valves located in fire areas of a division different than the division of the valve not be routed through fire areas containing any circuitry associated with the inboard valve of the isolation pair. See Table 9A.5-2 for identification of specific valves which fall in this category.

9A.5.5.17 Division 4 Sensors

There are a few cases of division 4 instruments being mounted in division 2 fire and HVAC area. It is possible that both the division 2 and 4 sensors could be lost due to a single fire. This would either cause the two channels to trip high or alarm down scale. A high trip would cause the protective action to be taken as a result of the two-out-of-four logic. For a down scale trip, the operator would know that a failure had occurred and automatic action would still be initiated by divisions 1 or 3. For these reasons, simultaneous loss of both the divisions 2 and 4 instruments is acceptable.

9A.5.6 Not Used

9A.5.7 Typical Circuits Analysis of Special Cases

This analysis is for those cases where a device from one division is located in an area of another division. Only typical cases are analyzed here. Each case type is assigned an electrical separation type code for unique identification. An analysis and a typical electrical connection block diagram (Figure 9A.5-2) are presented for each typical case. Table 9A.5-2 provides a summary of the special cases of the equipment in the reactor building discussed in Appendix 9A.5 Special Cases. It provides the justification and their acceptability from the standpoint of the consequences on the electrical circuits only. The table also references analyses to confirm the acceptability of the loss of function.

In all cases Regulatory Guide 1.75 and IEEE-384 are met. The justification is for the acceptability of complete burnout of the fire area in which the device is located.

Cases with special situations which do not lend themselves to a typical analysis are discussed individually in Appendix 9A, Section 9A.5.

Type 1A, Large 460V Motor

This type is for a 460V Class 1E motor which is fed from a 480V Class 1E power center and is located in a divisional area different than the division of the motor. A current limiting fuse is added downstream of the breaker in the power center to provide Class 1E redundant protection for the motor feed circuit to assure that a motor or cable fault does not propagate back to the bus and cause the bus supply breaker to open. A fault in the motor circuit will cause a momentary voltage drop on the bus but the 480V loads are required to be designed to accommodate momentary voltage dips while a load breaker is clearing a downstream fault. Tables referencing this typical circuit analysis should have a column which gives the justification for the acceptability of the loss of function of the device.

Type 1B, Small 460V Motor

Type 1B is the same as Type 1A except that the source of power is a 480V motor control center. Otherwise, the discussion for Type 1A applies.

Type 1C, 460V Motor Operated Valve

Type 1C is the same as Type 1B except that the load is a 460V valve motor and therefore has a cable for position switches as well as a power cable. The power for the position switches is required to be provided by a control power transformer in the MCC cubicle so that faults in the position switch circuits affect only the power source for the one valve. The motor power circuit protection is the same as Type 1B.

Type 2A, Thermocouple

Cables are routed in low level signal cable trays with covers or in conduit so that there are no voltage sources within the raceways which could short to the thermocouples leads to create overvoltage situations in the thermocouple circuits. Loss of signal is all that could occur as a result of failures in the thermocouple circuits. Transfer of voltage disturbances upstream is blocked by the millivolt readout circuits of the signal multiplexer. Tables referencing this typical circuit analysis should have a column which gives the justification for the acceptability of the loss of function of the device.

Type 2B, Process Instrument Transmitters

Cables for transmitters for process instruments are routed in low level signal cable trays with covers or in conduit so that there are no voltage sources within the raceways which could short and create overvoltage situations in the instrument circuits. Loss of signal could occur as a result of failures in the transmitter circuits. Upscale and/or downscale trips and/or alarms are provided. The current power supply in the signal multiplexer blocks upstream transfer of voltage and current disturbances which may occur in the cable or transmitter. Tables referencing this typical circuit analysis should have a column which gives the justification for the acceptability of the loss of function of the device.

Type 3B, AC Solenoid Valves

The power for operating AC solenoid valves is supplied from the 120 VAC distribution system to the demultiplexer for the valve. A current limiting fuse is installed on the power feed fine to the multiplexer, so that any fault on solenoid valve is isolated and do not propagate back up into the portions of the AC distribution system common with other systems.

Type 3C, DC Solenoid Valves

The power for operating DC solenoid valves is supplied from the DC distribution system to the demultiplexer for the valve. Both the supply and return for the DC are fused at the multiplexer so that faults are isolated and do not propagate back up into the portions of the DC system common with other systems.

Type 4A, Radiation Detector

Cables for radiation detectors are routed in low level signal cable trays with covers or in conduit so that there are no voltage sources within raceways which could short and create overvoltage situations in the detector circuit. Loss of signal could occur as a result of failures in the detector circuit. A fire in the room can develop a short on a detector power cable. A series resistor has been placed in each channel of the auctioneer power supplies, therefore current drain on the high voltage supply will be limited and the fault will not propagate further. A short on a power cable shall generate a down scale inop trip alarm to the control room.

Table 9A.5-1 Redundant Instrumentation or Equipment in Same Fire Area

Device Number	Division of Device(s)	Location	System	Purpose
E51-PT311 B,F	2	RCIC Pump Room	RCIC	Isolation signal to Div II isolation valve.
B21-TE003	1,2	Upper Drywell	NB	Senses instrument lines temperature for enhanced water level indicators.
D11-RE022	1,2,3,4	Spent Fuel Storage Area	PRM	Fuel exchange area exhaust radiation monitor.
D11-RE003 A-D	1,2,3,4	Stack	PRM	Reactor building ventilation system exhaust air radiation monitor.
T22-MT011	1,2	STGS Monitor Room	SGTS	Monitors for high moisture in SGTS filter train.
U41-D109,10	1,2	FPC Pump Room HVAC	HVAC	Provides redundant heating and ventilation for FPC pump area.
U41-F002 A,B	1,2	Reactor Refueling Area	HVAC	Reactor area exhaust isolation valves.
U41-D111,112	1,2	SGTS Room HVAC	HVAC	Provides redundant heating and ventilation for SGTS equipment area.
G51-F020	1	SPCU Pump Room	SPCU	Redundant isolation valve for SPCU suction line.
K11-F001,2	1,2	CUW/FPC Backwash Tank	RD	Provides redundant drainage for radioactive material disposal.
G31-F003 & G31-F0131	1 1	Reactor Water Cleanup Equipment Area	CUW	Redundant isolation valves for CUW lines.
G41-TE014 A,B	1,2	FPC Heat Exchanger Room	FPC	Redundant temperature sensors.
T31-F002	2	AC Fan and Filter Area	ACS	Redundant isolation valve for atmospheric control system.

Table 9A.5-2 Summary of the Reactor Building Special Cases

Item No.	MPL No.	Div.	Elev.	Horiz. Dim.	Vert. Dim.	Description	Room No.	Fire Area Div.	Elec. Sep. Type Code	Justification for Acceptability of Loss of Function
1	C12-F139A-1*	2	–8200	4.7	B.2	HCU AO VLV (Type of 28)	118	1	3B	See Section 9A.5.5.1
2	C12-F139A-3*	2	–8200	4.7	E.8	HCU AO VLV (Type of 25)	129	3	3B	See Section 9A.5.5.1
3	C12-F139A-4*	2	–8200	3.2	B.2	HCU AO VLV (Type of 25)	111	4	3B	See Section 9A.5.5.1
4	C12-F139B-1*	3	–8200	4.7	B.2	HCU AO VLV (Type of 28)	118	1	3B	See Section 9A.5.5.1
5	C12-F139B-2*	3	–8200	3.2	E.8	HCU AO VLV (Type of 25)	125	2	3B	See Section 9A.5.5.1
6	C12-F139B-4*	3	–8200	3.2	B.2	HCU AO VLV (Type of 25)	111	4	3B	See Section 9A.5.5.1
7	C12-PT011C	3	–8200	4.7	F.2	PRESS TRANSMITTER	126	2	2B	2/4 logic, two Xmtr located in diff.fire area
8	C12-PT011D	4	–8200	3.3	A.8	PRESS TRANSMITTER	117	1	2B	2/4 logic, two Xmtr located in diff.fire area
9	C41-C001A	1	23500	2.4	E.2	SLC INJECT PUMP A	622	2	1B	Redundant to RPS
10	C41-F001A	1	23500	2.5	E.0	MO GLB VLV (SUCT)	622	2	1C	Redundant to RPS
11	C41-F006A	1	12300	2.2	C.8	MO GLB VLV (INJ)	444	4	1C	Redundant to RPS
12	C41-F006B	2	12300	2.2	C.8	MO GLB VLV (INJ)	444	4	1C	Redundant to RPS
13	D11-E/O-2*	2	12300	5.2	A.5	MSL E/O CONVERTER	410	1	4A	Loss of MSL Rad. Mont. during fire is accept.
14	D11-E/O-3*	3	12300	5.2	A.5	MSL E/O CONVERTER	410	1	4A	Loss of MSL Rad. Mont. during fire is accept.
15	D11-E/O-4*	4	12300	5.2	A.5	MSL E/O CONVERTER	410	1	4A	Loss of MSL Rad. Mont. during fire is accept.
16	D11-RE003A	1	27200	2.7	B.1	REA BLDG EX DETR	643	2	4A	See Section 9A.5.5.13
17	D11-RE003C	3	27200	2.7	B.1	REA BLDG EX DETR	643	2	4A	See Section 9A.5.5.13
18	D11-RE003D	4	27200	2.7	B.1	REA BLDG EX DETR	643	2	4A	See Section 9A.5.5.13

Table 9A.5-2 Summary of the Reactor Building Special Cases (Continued)

Item No.	MPL No.	Div.	Elev.	Horiz. Dim.	Vert. Dim.	Description	Room No.	Fire Area Div.	Elec. Sep. Type Code	Justification for Acceptability of Loss of Function
19	D11-RE022A	1	31700	5.1	C.9	FUEL EX DETECTOR	716	3	4A	See Section 9A.5.5.13
20	D11-RE022B	2	31700	2.8	E.8	FUEL EX DETECTOR	721	3	4A	See Section 9A.5.5.13
21	D11-RE022D	4	31700	2.8	D.0	FUEL EX DETECTOR	742	3	4A	See Section 9A.5.5.13
22	D23-F001A	1	19000	5.7	D.9	SO VALVE	530	3	3C	Redundant device (F001B) located in diff. fire area
23	D23-F004A	1	19000	5.7	D.9	MO GLOBE VALVE	530	3	1C	Redundant “B” vlv located in diff. fire area
24	D23-F005A	1	19000	5.7	D.9	MO GLOBE VALVE	530	3	1C	Redundant “B” vlv located in diff. fire area
25	D23-F006A	1	6000	5.5	E.3	MO GLOBE VALVE	335	3	1C	Redundant “B” vlv located in diff. fire area
26	D23-F007A	1	6000	5.5	E.3	MO GLOBE VALVE	335	3	1C	Redundant “B” vlv located in diff. fire area
27	D23-F008A	1	6000	5.5	E.3	MO GLOBE VALVE	335	3	1C	Redundant “B” vlv located in diff. fire area
28	D23-PT007A	1	19000	5.7	D.9	PRESS TRANSMITTER	530	3	2B	Redundant “B” Xmtr located in diff. fire area
29	D23-RE005B	2	14700	2.1	C.7	GAMMA DETECTOR	444	4	4A	Redundant “A” detr located in diff. fire area
30	E11-F011A	2	14550	6.0	C.5	MO GATE VLV (ISOL)	414	1	1C	See Section 9A.5.5.14
31	E11-F011B	3	14550	2.0	D.2	MO GATE VLV (ISOL)	421	2	1C	See Section 9A.5.5.14
32	E11-F011C	1	14550	5.9	D.6	MO GATE VLV (ISOL)	431	3	1C	See Section 9A.5.5.14
33	E31-F003	2	20100	5.2	B.4	DW FPM A/O SOL VLV (IB)	511	1	3B	See Section 9A.5.5.7
34	E31-F004	2	8850	5.9	C.7	DW FPM A/O SOL VLV (IB)	318	1	3B	See Section 9A.5.5.7

Table 9A.5-2 Summary of the Reactor Building Special Cases (Continued)

Item No.	MPL No.	Div.	Elev.	Horiz. Dim.	Vert. Dim.	Description	Room No.	Fire Area Div.	Elec. Sep. Type Code	Justification for Acceptability of Loss of Function
35	E31-TE005B	2	–8200	6.0	C.5	RCIC AMB TEMP ELEMENT	112	1	2A	See Section 9A.5.5.7
36	E31-TE005C	3	–8200	6.0	C.5	RCIC AMB TEMP ELEMENT	112	1	2A	See Section 9A.5.5.7
37	E31-TE005D	4	–8200	6.0	C.5	RCIC AMB TEMP ELEMENT	112	1	2A	See Section 9A.5.5.7
38	E31-TE008B	2	–8200	5.7	B.3	RHR A AMB TEMP ELEM	110	1	2A	See Section 9A.5.5.7
39	E31-TE008C	3	–8200	5.7	B.3	RHR A AMB TEMP ELEM	110	1	2A	See Section 9A.5.5.7
40	E31-TE008D	4	–8100	5.7	B.3	RHR A AMB TEMP ELEM	110	1	2A	See Section 9A.5.5.7
41	E31-TE008E	1	–8200	2.2	E.7	RHR B AMB TEMP ELEM	121	2	2A	See Section 9A.5.5.7
42	E31-TE008G	3	–8100	2.2	E.7	RHR B AMB TEMP ELEM	121	2	2A	See Section 9A.5.5.7
43	E31-TE008H	4	–8200	2.2	E.7	RHR B AMB TEMP ELEM	121	2	2A	See Section 9A.5.5.7
44	E31-TE008J	1	–8200	5.8	E.7	RHR C AMB TEMP ELEM	132	3	2A	See Section 9A.5.5.7
45	E31-TE008K	2	–8200	5.8	E.7	RHR C AMB TEMP ELEM	132	3	2A	See Section 9A.5.5.7
46	E31-TE008M	4	–8200	5.8	E.7	RHR C AMB TEMP ELEM	132	3	2A	See Section 9A.5.5.7
47	E31-TE009A	1	–1700	1.6	C.0	CUW R/HX AMB TEM ELE	241	2	2A	See Section 9A.5.5.7
48	E31-TE009C	3	–1700	1.6	C.0	CUW R/HX AMB TEM ELE	241	2	2A	See Section 9A.5.5.7
49	E31-TE009D	4	–1700	1.6	C.0	CUW R/HX AMB TEM ELE	241	2	2A	See Section 9A.5.5.7
50	E31-TE009E	1	–8200	1.6	C.0	CUW NR/HX AMB TEM ELE	141	2	2A	See Section 9A.5.5.7
51	E31-TE009G	3	–8200	1.6	C.0	CUW NR/HX AMB TEM ELE	141	2	2A	See Section 9A.5.5.7
52	E31-TE009H	4	–8200	1.6	C.0	CUW NR/HX AMB TEM ELE	141	2	2A	See Section 9A.5.5.7
53	E31-TE009J	1	–8200	2.0	A.8	CUW V RM AMB TEM ELE	443	2	2A	See Section 9A.5.5.7
54	E31-TE009L	3	–8200	2.0	A.8	CUW V RM AMB TEM ELE	443	2	2A	See Section 9A.5.5.7
55	E31-TE009M	4	–8200	2.0	A.8	CUW V RM AMB TEM ELE	443	2	2A	See Section 9A.5.5.7
56	E31-TE010A	1	–8200	1.5	A.8	CUW SUC FLO TEMP ELEM	146	2	2A	See Section 9A.5.5.7

Table 9A.5-2 Summary of the Reactor Building Special Cases (Continued)

Item No.	MPL No.	Div.	Elev.	Horiz. Dim.	Vert. Dim.	Description	Room No.	Fire Area Div.	Elec. Sep. Type Code	Justification for Acceptability of Loss of Function
57	E31-TE010C	3	–8200	1.5	A.8	CUW SUC FLO TEMP ELEM	146	2	2A	See Section 9A.5.5.7
58	E31-TE010D	4	–8200	2.0	A.8	CUW SUC FLO TEMP ELEM	147	2	2A	See Section 9A.5.5.7
59	E31-TE011A	1	–8200	1.5	A.8	CUW RET FLO TEMP ELEM	146	2	2A	See Section 9A.5.5.7
60	E31-TE011C	3	–8200	1.5	A.8	CUW RET FLO TEMP ELEM	146	2	2A	See Section 9A.5.5.7
61	E31-TE011D	4	–8200	2.0	A.8	CUW RET FLO TEMP ELEM	147	2	2A	See Section 9A.5.5.7
62	E31-TE012A	1	–8200	1.5	A.8	CUW B/D FLO TEMP ELEM	146	2	2A	See Section 9A.5.5.7
63	E31-TE012C	3	–8200	1.5	A.8	CUW B/D FLO TEMP ELEM	146	2	2A	See Section 9A.5.5.7
64	E31-TE012D	4	–8200	2.0	A.8	CUW B/D FLO TEMP ELEM	147	2	2A	See Section 9A.5.5.7
65	E51-F036	2	14450	6.0	C.8	MO GATE VLV (ST SUP)	414	1	1C	See Section 9A.5.5.15
66	E51-PT014B	2	–1700	6.2	B.9	PRESS XMTR (TURB EXH)	210	1	2B	See Section 9A.5.5.15
67	E51-PT014F	2	–1700	6.2	B.9	PRESS XMTR (TURB EXH)	210	1	2B	See Section 9A.5.5.15
68	G31-F003	1	14480	2.4	B.6	MO GATE VALVE (ISOL)	443	2	1C	See Table 9A.5-1
69	G31-F072	1	13500	2.3	B.6	AO VALVE	443	2	3C	See Section 9A.5.5.16
70	H22-P044A*	1	23500	6.3	F.1	CAMS GAS CYL RACK A	633	3	N/A	Redundant rack in diff fire area. See Section 9A.5.5.16
71	H22-P055A*	23	–1700	5.2	A.3	SCRAM SOL FUSE PNL A	210	1	N/A	See Section 9A.5.5.1
72	H22-P055B*	23	–1700	4.6	E.8	SCRAM SOL FUSE PNL B	231	3	N/A	See Section 9A.5.5.1
73	H22-P055C*	23	–1700	4.9	E.7	SCRAM SOL FUSE PNL C	231	3	N/A	See Section 9A.5.5.1
74	H22-P055D*	23	–1700	5.0	A.3	SCRAM SOL FUSE PNL D	210	1	N/A	See Section 9A.5.5.1
75	H22-P055E*	23	–1700	5.1	A.3	SCRAM SOL FUSE PNL E	210	1	N/A	See Section 9A.5.5.1
76	H22-P055F*	23	–1700	4.8	E.7	SCRAM SOL FUSE PNL F	231	3	N/A	See Section 9A.5.5.1
77	H22-P055G*	23	–1700	5.0	E.6	SCRAM SOL FUSE PNL G	231	3	N/A	See Section 9A.5.5.1

Table 9A.5-2 Summary of the Reactor Building Special Cases (Continued)

Item No.	MPL No.	Div.	Elev.	Horiz. Dim.	Vert. Dim.	Description	Room No.	Fire Area Div.	Elec. Sep. Type Code	Justification for Acceptability of Loss of Function
78	H22-P055H*	23	–1700	4.8	A.3	SCRAM SOL FUSE PNL H	210	1	N/A	See Section 9A.5.5.1
79	P21-F075B	1	13550	2.5	E.3	MO GATE VALVE (ISO)	420	2	1C	Outbd iso vlv, see Section 9A.5.5.16
80	P21-F081B	1	13550	2.6	E.4	MO GATE VALVE (ISO)	420	2	1C	Outbd iso vlv, see Section 9A.5.5.16
81	P24-F053	1	13550	2.7	E.5	MO GATE VALVE (DW ISO)	420	2	1C	Outbd iso vlv, see Section 9A.5.5.16
82	P24-F142	1	13550	2.8	E.6	MO GATE VALVE (DW ISO)	420	2	1C	Outbd iso vlv, see Section 9A.5.5.16
83	P54-F007B	2	19000	2.2	B.9	MO GLOBE VALVE	543	4	1C	Outbd iso vlv, see Section 9A.5.5.16
84	P54-F200	1	19000	2.4	B.9	MO GLOBE VALVE	543	4	1C	Outbd iso vlv, see Section 9A.5.5.16
85	P54-PT002B	2	19000	2.3	B.9	PRESS TRANSMITTER	543	4	2B	Redundant “A” Xmtr located in diff fire area
86	T22-C002C	2	23500	2.2	B.6	COOLING FAN C	642	3	1B	Redundant “B” pump located in diff fire area
87	T22-C002B	3	23500	2.2	C.7	COOLING FAN B	641	2	1B	Redundant “A” pump located in diff fire area
88	Not Used									
89	T31-F002	2	13700	5.8	C.2	AO VALVE	411	1	3C	Normally closed, fail closed vlv. Loss of atmos control is accept. contmt
90	T31-F003	2	8500	5.5	B.6	AO VALVE	318	1	3C	Normally closed, fail closed vlv. Loss of contmt atmos control is accept.

Table 9A.5-2 Summary of the Reactor Building Special Cases (Continued)

Item No.	MPL No.	Div.	Elev.	Horiz. Dim.	Vert. Dim.	Description	Room No.	Fire Area Div.	Elec. Sep. Type Code	Justification for Acceptability of Loss of Function
91	T31-F008	1	19000	2.6	E.6	AO VALVE	521	2	3C	Normally closed, fail closed vlv. Loss of path to SGTS is accept.
92	T31-F009	1	19000	2.6	E.6	AO VALVE	521	2	3C	Normally closed, fail vlv. Loss of contmt control is accept.atmos.
93	T31-F040	2	13700	5.8	C.2	AO VALVE	411	1	3C	Normally open, fail clsd vlv. Loss of nitro. supply is accept.
94	T31-F041	2	13700	5.8	C.2	AO VALVE	411	1	3C	Normally open, fail clsd vlv. Loss of nitro. supply is accept.
95	T31-F731	1	23500	5.8	C.8	SO VALVE	616	3	3C	Normally open, fail open instru vlv. Backed by manual iso vlv is accept.
96	T31-F737B	1	6500	2.1	D.5	SO VALVE	323	2	3C	Normally open, fail open instru vlv. Backed by manual iso vlv is accept.
97	T31-F739D	4	2800	2.2	C.1	SO VALVE	241	2	3C	Normally open, fail open instru vlv. Backed by manual iso vlv is accept.
98	T31-F741D	4	-1700	2.2	C.1	SO VALVE	241	2	3C	Normally open, fail open instru vlv. Backed by manual iso vlv is accept.
99	T31-F801A	1	18100	2.0	D.5	SO VALVE	528	2	3C	Normally open, fail open instru vlv. Backed by manual iso vlv is accept.

Table 9A.5-2 Summary of the Reactor Building Special Cases (Continued)

Item No.	MPL No.	Div.	Elev.	Horiz. Dim.	Vert. Dim.	Description	Room No.	Fire Area Div.	Elec. Sep. Type Code	Justification for Acceptability of Loss of Function
100	T31-F801B	2	18100	5.7	B.8	SO VALVE	510	1	3C	Normally open, fail open instru vlv. Backed by manual iso vlv is accept.
101	T31-F805A	1	6600	5.9	D.5	SO VALVE	332	3	3C	Normally open, fail open instru vlv. Backed by manual iso vlv is accept.
102	T31-LT058D	4	–8200	2.2	C.1	LEVEL TRANSMITTER	140	2	2B	See Section 9A.5.5.17
103	T49-F002B-1	1	20100	2.7	E.4	SOLENOID VALVE	521	2	3C	See Section 9A.5.5.9
104	T49-F002B-2	4	20100	2.7	E.4	SOLENOID VALVE	521	2	3C	See Section 9A.5.5.9
105	T49-F002C-1	1	20100	5.7	D.8	SOLENOID VALVE	530	3	3C	See Section 9A.5.5.9
106	T49-F002C-2	4	20100	5.7	D.8	SOLENOID VALVE	530	3	3C	See Section 9A.5.5.9
107	T49-F007A-1	1	800	5.8	D.5	SOLENOID VALVE	230	3	3C	See Section 9A.5.5.9
108	T49-F007A-2	4	800	5.8	D.5	SOLENOID VALVE	230	3	3C	See Section 9A.5.5.9
109	T49-F007B-1	1	800	2.8	E.5	SOLENOID VALVE	221	2	3C	See Section 9A.5.5.9
110	T49-F007B-2	4	800	2.8	E.5	SOLENOID VALVE	221	2	3C	See Section 9A.5.5.9
111	U41-D109	1	18100	1.4	A.7	FPC PUMP (A) RM HVH	547	2	1B	Cooling for FPC pump, redundancy provided by RHR
112	U41-F001B	2	31700	6.3	A.4	AO VLV-R/A SUP ISO VLV	710	1	3C	Loss of non-safety related contmt. HVAC is accept.
113	U41-F002A	1	27500	2.8	A.7	AO VLV-R/A EXH ISO (A)	643	2	3C	Loss of non-safety related contmt. HVAC is accept.
114	X-071B	2	19000	2.4	B.9	ADS ACCUMULATOR FEED	543	4	N/A	Redundant div feed in div 1 fire area. OK

Table 9A.5-2 Summary of the Reactor Building Special Cases (Continued)

Item No.	MPL No.	Div.	Elev.	Horiz. Dim.	Vert. Dim.	Description	Room No.	Fire Area Div.	Elec. Sep. Type Code	Justification for Acceptability of Loss of Function
115	X-091	2	20100	2.2	C.5	COMPENSATION/INST LINE	543	4	N/A	Redundant pene in div 1, 3 fire area.
116	X-111	2	20100	2.2	C.8	COMPENSATION/INST LINE	543	4	N/A	Redundant pene in div 1, 3 fire area.
117	X-161B	2	14700	2.3	C.0	CAMS SMPLING	444	4	N/A	Redundant pene in div 1 fire area.
118	X-162A	1	19000	5.7	D.8	CAMS GAMMA DETECTOR	530	3	N/A	Redundant pene in div 2 fire area.
119	X-300A	1	6000	5.5	E.3	COMP LEAD WIRE and INSTR	335	3	N/A	Redundant pene in div 2 fire area.
120	X-322D	4	400	5.8	D.6	SUPP CHAMBER WTR LEV	230	3	N/A	Redundant pene in div 1, 2 fire area.
121	X-322E	3	400	2.2	D.6	SUPP CHAMBER WTR LEV	222	2	N/A	Redundant pene in div 1, 2 fire area.
122	X-323D	4	–6700	5.8	D.9	SUPP CHAMBER WTR LEV	130	3	N/A	Redundant pene in div 1, 2 fire area.
123	X-323E	3	–6700	2.2	D.9	SUPP CHAMBER WTR LEV	122	2	N/A	Redundant pene in div 1, 2 fire area.
124	X-332A	1	6000	5.5	E.3	CAMS A-C SAMPLING	335	3	N/A	Pene for redundant function in diff. fire area.

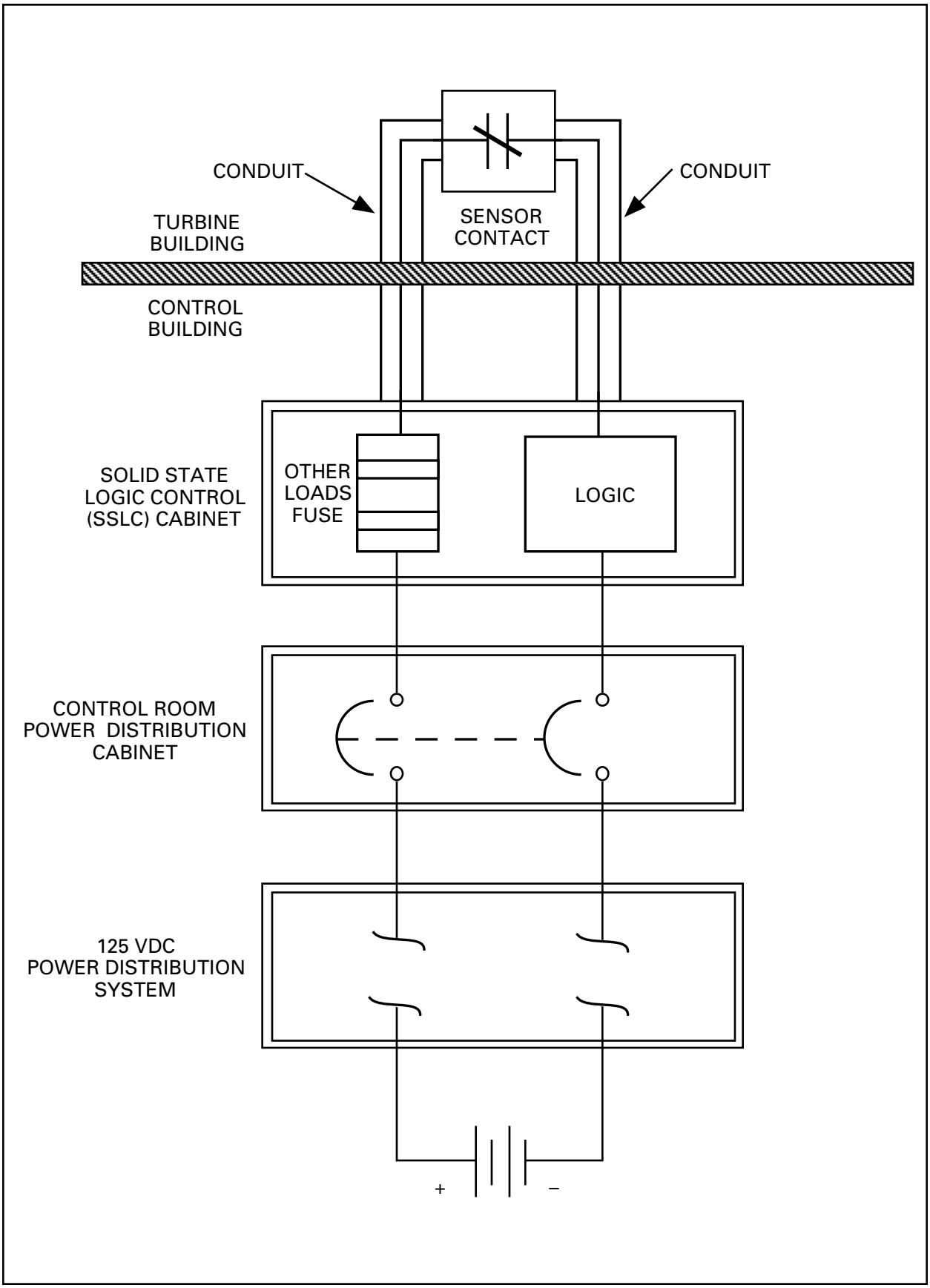

Figure 9A.5-1 Typical RPS Contact Interface Turbine Building to Control Building

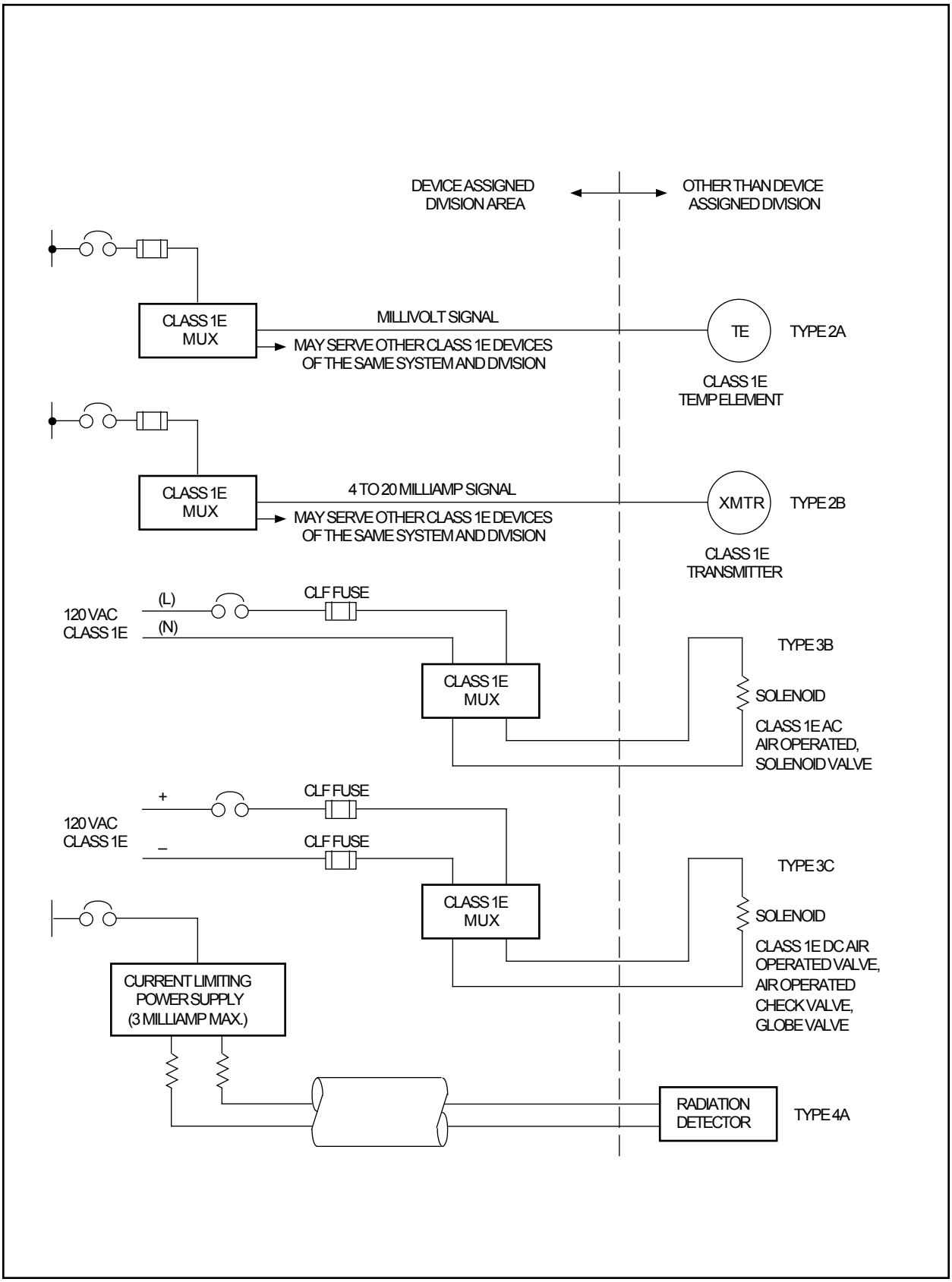

Figure 9A.5-2 Typical Electrical Equipment Connection Block Diagrams of Special Cases

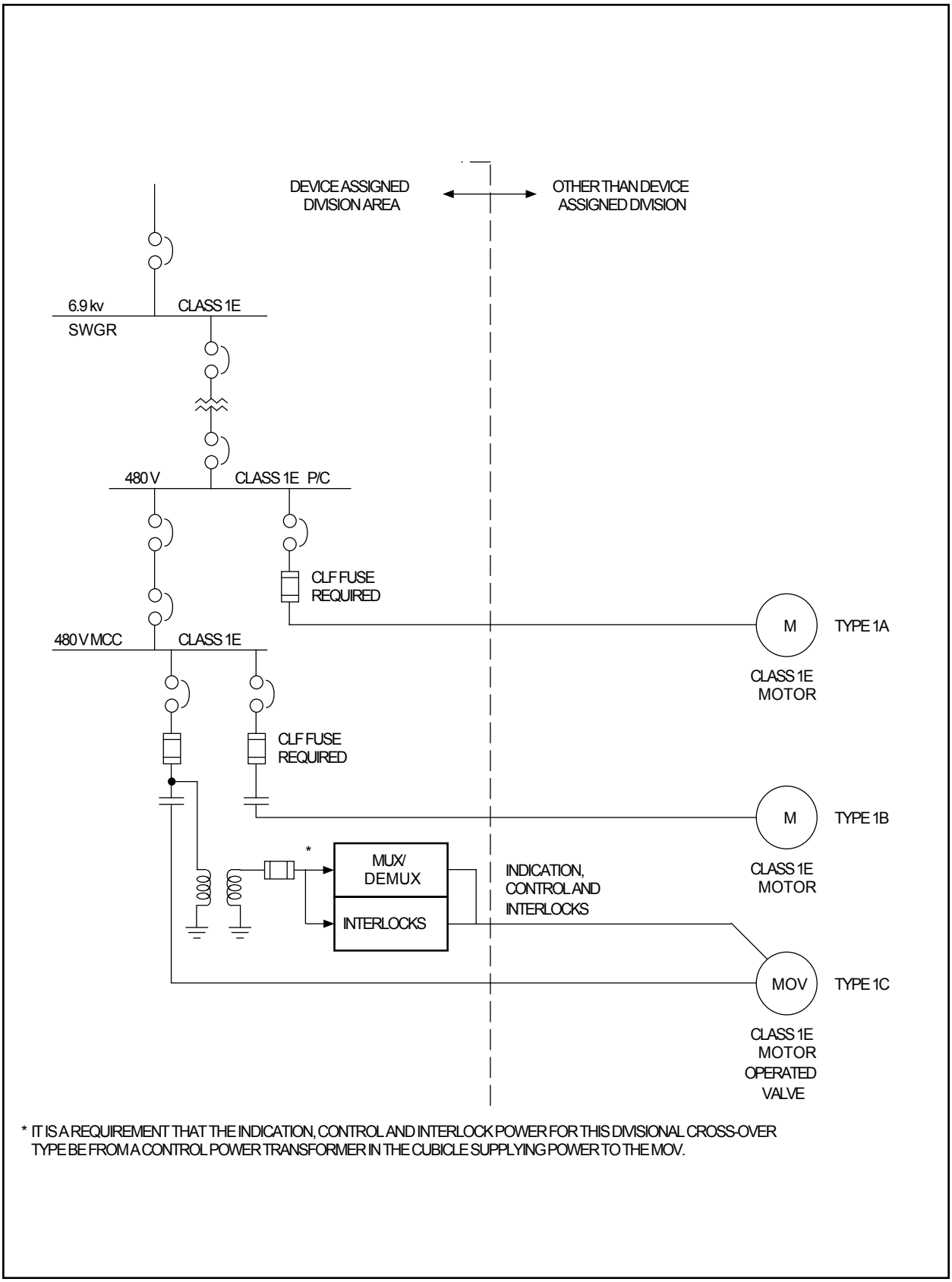

Figure 9A.5-2 (Continued)
Typical Electrical Equipment Connection Block Diagrams of Special Cases

9A.6 Fire Hazard Analysis Database

9A.6.1 Development of Database

The approach for the analysis was to review the system piping and instrument diagrams (P&IDs), and to prepare a database which listed every device that could be adversely affected by fire. The compilation of the results of this review is shown in Table 9A.6-1. A column by column explanation of the headings in the table are given in the notes for the table.

In addition to taking information from P&IDs, if the reviewers knew or became aware of something that would eventually be in the plant design but did not appear on any drawing at the time this database was established, it also, was added to the list and assigned a special MPL number. This brought the device into the database for tracking. If possible each device was given an electrical safety division assignment and where a drawing providing confirmation of the divisional assignment of a device was available, the number of the drawing also was entered into the database. If the division could not be determined, a question mark was entered.

If a device appeared on the building arrangement drawings, its actual location by row, column and elevation was entered into the database. For all other identified devices, an estimate of location by row, column and elevation, based on the known location of nearby devices and experience was entered into the database. The validity of the location information for each item was indicated as being determined by reference to a drawing or by estimation.

9A.6.2 Utilization of Database

The fire hazard analysis was then performed on the verified or assumed plant design as documented by the database. This made it possible for a fire hazard analysis to be performed on an essentially complete plant configuration. It makes a record of the configuration analyzed available for use as a guide in completing the plant design. The assumed information in the database will be compared to the plant of the COL applicant to confirm that the Appendix 9A fire hazard analysis conclusions are valid for his plant. (See Subsection 9.5.13.12 for COL license information requirements).

As part of the analysis, dimensional definition of the rooms shown on the current building arrangement drawings was entered into a computer database so that a sort of devices by room could be obtained. A copy of the sort is included as Table 9A.6-2. The grouping of devices in each room was used as the assumed grouping for performing the fire hazard analysis.

Notes for Tables 9A.6-1, 2, 3, & 4—Fire Hazard Analysis—Equipment Database

Column Headings:

Item No.

Where listed, this is a serialized number which was added to the database to expedite tracking of the individual records.

MPL Number

This is the master parts list number for the device. If the MPL number for a device was not known, a number was made up and an asterisk placed at the right hand end of the number. This facilitates the tracking of devices.

Elect. Division

The number or alpha character shown in this column is the electrical divisional assignment utilized for the analysis.

1 Division I

2 Division II

3 Division III

4 Division IV

N Non-divisional (Not Class 1E)

? Insufficient information to determine divisional assignment

Multiple numbers per item indicate that there are multiple divisions associated with the item.

Elev. Location

Indicates the assigned elevation in millimeters for the location of the device. A “99999” in the column indicates that the elevation is unknown.

Location Number Coord.

The building column coordinate for the location of the device in the reactor building.

Location Alpha Coord.

The building row coordinate for the location of the device in the reactor building.

Description

Short description of the device.

System Drawing

The drawing number which identifies the device as being part of the plant design. Usually the drawing number is for the system P&ID. A question mark in this column indicates a drawing was not available.

Div. Assign. Verification Drawing No.

This is the number for the drawing used to verify the correct divisional assignment for the device. A question mark indicates that a drawing was not available.

Status of Device Location

The information in this column indicates the validity of the device location information. The entries have the following meanings.

K The location of the drawing was given on the drawing listed in the "Device Location Drawing" column.

V Device location could not be found on any drawing.

?V Device may be shown on a drawing but it is not labeled so it can be identified.

F Location of device not known. Location will be determined as the detailed design progresses.

Device Location Drawing

Drawing number from which indicated location of the device was determined. Question mark indicates no drawing was available.

Mech. or Ins/Elect. Penet.

Some of the devices on the list are electrical, instrumentation or mechanical penetrations. The entries have the following meanings:

N/A Device is not a penetration.

M Mechanical penetration.

I/E Instrumentation or Electrical Penetration.

E Electrical Penetration.

Room Number

This is a room number that was assigned strictly for use in the FHA to uniquely identify areas in the plant. The numbers are also shown on the FHA Equipment Drawings, Figure 9A.4-1 through 9A.4-8.

Cables

The power and instrumentation cables for each piece of equipment are considered to be part of the equipment listed.

Table 9A.6-1 Fire Hazard Analysis Equipment Data Base — Sorted by MPL Number

This table has been superceded by Table 9A.6-2

Table 9A.6-2 Fire Hazard Analysis Equipment Database Sorted by Room — Reactor Building

Item No.	MPL No	Elect Div.	Elev. Location	Location Number Coord.	Location Alpha Coord.	Description	System Drawing	Room No.
1	E11-B001A	1	-8200	6.4	A.8	HEAT EXCHANGER	103E1797/1	110
2	E11-F004A	1	-8200	6.2	B.3	MO GLOBE VALVE (HXOUT)	103E1797/1	110
3	E11-F005A	1	-8200	6.2	B.3	MO GATE VALVE (INJ)	103E1797/1	110
4	E11-F006A	1	-8200	6.2	B.3	AO CHECK VALVE	103E1797/1	110
5	E11-F043A	1	-8200	6.5	B.1	SO GLOBE VALVE	103E1797/1	110
6	E11-F044A	1	-8200	6.5	B.1	SO GLOBE VALVE	103E1797/1	110
7	E11-F045A	1	-8200	6.5	B.1	MO GLOBE VALVE (SAMPLE)	103E1797/1	110
8	E11-F046A	1	-8200	6.5	B.1	MO GLOBE VALVE (SAMPLE)	103E1797/1	110
9	E11-POT301A	1	-8200	6.2	B.3	POS XMTR (F004A)	103E1797/1	110
10	E11-TE006A	N	-8200	6.4	A.8	TEMP ELEMENT	103E1797/1	110
11	E11-TE007A	N	-8200	6.2	B.3	TEMP ELEMENT	103E1797/1	110
12	E11-TT006A	N	-8200	6.4	A.8	TEMP XMTR (HX A INL)	103E1797/1	110
13	P21-F013A	1	-8200	6.5	A.5	MO GLOBE VALVE	107E5112/0	110
14	P21-F055A	1	-8200	6.5	A.5	MO GATE VALVE	107E5112/0	110
15	P21-F055D	1	-8200	6.5	A.5	MO GATE VALVE	107E5112/0	110
16	P21-FT008A	1	-8200	6.5	A.5	FLOW XMTR (RHR HX A)	107E5112/0	110
17	P21-TE009A	1	-8200	6.5	A.5	TEMP ELEM (RHR HX A)	107E5112/0	110
18	D21-RE024	N	-8200	6.0	B.1	AREA RAD DETECTOR	299X701-171/0	110
19	E11-C001A	1	-8200	5.8	B.3	RHR PUMP A	103E1797/1	110
20	E11-C002A	1	-8200	5.1	B.2	RHR A FILL PUMP	103E1797/1	110
21	E11-F001A	1	-7085	5.2	B.4	MO GATE VALVE (PSUCT)	103E1797/1	110
22	E11-F012A	1	-8200	5.5	B.4	MO GATE VALVE (RSUCT)	103E1797/1	110
23	E11-F013A	1	-8200	5.7	B.3	MO GLOBE VALVE (HXBYP)	103E1797/1	110
24	E11-F029A	1	-8200	5.7	B.3	MO GATE VALVE (SPWS)	103E1797/1	110
25	E11-F030A	1	-8200	5.7	B.3	MO GATE VALVE (SPWS)	103E1797/1	110
26	E11-POT302A	1	-8200	5.7	B.3	POS XMTR (FO13A)	103E1797/1	110
27	E11-POT303A	1	-8200	5.7	B.3	POS XMTR (FO30B)	103E1797/1	110
28	E11-TE011A	N	-8200	5.7	B.3	TEMP ELEMENT	103E1797/1	110
29	E31-TE008A	1	-8200	5.7	B.3	RHR A AMB TEMP ELEM	103E1792/1	110
30	E31-TE008B	2	-8200	5.7	B.3	RHR A AMB TEMP ELEM	103E1792/1	110
31	E31-TE008C	3	-8200	5.7	B.3	RHR A AMB TEMP ELEM	103E1792/1	110

Table 9A.6-2 Fire Hazard Analysis Equipment Database Sorted by Room — Reactor Building (Continued)

Item No.	MPL No	Elect Div.	Elev. Location	Location Number Coord.	Location Alpha Coord.	Description	System Drawing	Room No.
32	E31-TE008D	4	-8100	5.7	B.3	RHR A AMB TEMP ELEM	103E1792/1	110
33	E31-TE031A	N	-8200	5.7	B.3	RHR A DIFF TEMP ELEM	103E1792/1	110
34	E31-TE032A	N	-8200	5.7	B.3	RHR A DIFF TEMP ELEM	103E1792/1	110
35	U41-D103	1	-8200	5.7	B.7	RHR PUMP (A) ROOM HVH	107E5189/0	110
36	X-201	1	-7085	5.2	B.4	RHR A SUP POOL SUCT	795E880/3	110
37	K17-C102A	N	-8200	6.2	A.4	HCW PUMP - R/B SUMP A	103E1634/0	110
38	K17-C102F	N	-8200	6.2	A.4	HCW PUMP - R/B SUMP A	103E1634/0	110
39	K17-LE108A	N	-8200	6.2	A.4	LEVEL ELEMENT	103E1634/0	110
40	K17-LS106A	N	-8200	6.2	A.4	LEVEL SWITCH	103E1634/0	110
41	K17-LS107A	N	-8200	6.2	A.4	LEVEL SWITCH	103E1634/0	110
42	K17-LT108A	N	-8200	6.2	A.4	LEVEL TRANSMITTER	103E1634/0	110
43	C12-D004-4*	N	-8200	3.2	B.2	HCU (GR 4 TYP OF 25)	103E1789/0	111
44	C12-F139A-4*	2	-8200	3.2	B.2	HCU AO VLV (TYP OF 25)	103E1789/0	111
45	C12-F139B-4*	3	-8200	3.2	B.2	HCU AO VLV (TYP OF 25)	103E1789/0	111
46	C12-F143-4*	N	-8200	3.2	B.2	HCU AO VLV (TYP OF 25)	103E1789/0	111
47	C12-LS129-4*	N	-8200	3.2	B.2	HCU LVL SW (TYP OF 25)	103E1789/0	111
48	C12-POS001-4*	N	-8200	3.2	B.2	FMCRD POS SW (TYP OF 25)	103E1789/0	111
49	C12-PS130-4*	N	-8200	3.2	B.2	HCU PR SW (TYP OF 25)	103E1789/0	111
50	C81-DPT301D	4	-8200	3.4	B.2	DIFF PRESS TRANS	299X701-146/0	111
51	C81-DPT401D	N	-8200	3.4	B.2	DIFF PRESS TRANS	796E357	111
52	C81-DPT404D	N	-8200	3.4	B.2	DIFF PRESS TRANS	796E357	111
53	H22-P001D*	4	-8200	3.4	B.2	CORE FLOW INST RACK D	10Q273-280	111
54	E11-F036A	1	-8200	6.2	D.3	AO GLOBE VALVE	103E1797/1	112
55	E31-TE018A	1	-8200	6.5	C.8	RCIC DIFF TEMP ELEM	103E1792/1	112
56	E31-TE019A	1	-8200	6.5	C.8	RCIC DIFF TEMP ELEM	103E1792/1	112
57	E51-C001	1	-8200	6.3	C.2	RCIC PUMP	103E1795/1	112
58	E51-C002	1	-8200	6.3	C.5	RCIC TURBINE	103E1795/1	112
59	E51-C901*	1	-8200	6.3	C.9	RCIC VACUUM PUMP	103E1795/1	112
60	E51-C902*	1	-8200	6.4	C.9	RCIC CONDENSATE PUMP	103E1795/1	112
61	E51-F001	1	-8200	6.5	D.4	MO GATE VALVE (CST)	103E1795/1	112
62	E51-F011	1	-8200	6.3	C.6	MO GLOBE VALVE (MINFLO)	103E1795/1	112
63	E51-F031	1	-8200	6.3	C.6	AO GLOBE VALVE	103E1795/1	112
64	E51-F032	1	-8200	6.3	C.6	AO GLOBE VALVE	103E1795/1	112

Table 9A.6-2 Fire Hazard Analysis Equipment Database Sorted by Room — Reactor Building (Continued)

Item No.	MPL No	Elect Div.	Elev. Location	Location Number Coord.	Location Alpha Coord.	Description	System Drawing	Room No.
65	E51-F040	1	-8200	6.2	C.4	AO GLOBE VALVE	103E1795/1	112
66	E51-F041	1	-8200	6.2	C.4	AO GLOBE VALVE	103E1795/1	112
67	E51-F058	1	-8200	6.2	C.4	AO GLOBE VALVE	103E1795/1	112
68	E51-FT007-1	1	-8200	6.6	D.3	FLOW TRANSMITTER	103E1795/1	112
69	E51-FT007-2	1	-8200	6.6	D.3	FLOW TRANSMITTER	103E1795/1	112
70	E51-LS011	1	-8200	6.2	C.3	LEVEL SW (DRN POT)	103E1795/1	112
71	E51-LS901*	1	-8200	6.4	C.9	LEVEL SW (BARO TK)	103E1795/1	112
72	E51-LS902*	1	-8200	6.4	C.9	LEVEL SW (BARO TK)	103E1795/1	112
73	E51-PS901*	1	-8200	6.4	C.9	PRESS SW (BARO TK)	103E1795/1	112
74	E51-PT001	1	-8200	6.6	D.3	PRESS XMTR (PMP SUCT)	103E1795/1	112
75	E51-PT002	1	-8200	6.6	D.3	PRESS XMTR (PMP SUCT)	103E1795/1	112
76	E51-PT005	1	-8200	6.6	D.3	PRESS XMTR (PMP DISCH)	103E1795/1	112
77	E51-PT008	1	-8200	6.6	D.3	PRESS XMTR (PMP DISCH)	103E1795/1	112
78	E51-SE997*	1	-8200	6.3	C.5	SPEED ELEM (TURB)	103E1795/1	112
79	E51-TE004	1	-8200	6.6	D.3	TEMP ELEM (PMP DISCH)	103E1795/1	112
80	E51-TT004	1	-8200	6.6	D.3	TEMP TRANSMITTER	103E1795/1	112
81	H22-P004*	1	-8200	6.6	D.3	RCIC INSTR RACK	10Q273-280	112
82	H22-P005*	1	-8200	6.5	C.6	RCIC TURBINE INST RACK	10Q273-280	112
83	E31-TE005A	1	-8200	6.0	C.5	RCIC AMB TEMP ELEMENT	103E1792/1	112
84	E31-TE005B	2	-8200	6.0	C.5	RCIC AMB TEMP ELEMENT	103E1792/1	112
85	E31-TE005C	3	-8200	6.0	C.5	RCIC AMB TEMP ELEMENT	103E1792/1	112
86	E31-TE005D	4	-8200	6.0	C.5	RCIC AMB TEMP ELEMENT	103E1792/1	112
87	E51-F006	1	-7050	5.8	C.3	MO GATE VALVE (PSUCT)	103E1795/1	112
88	E51-F008	1	-8200	6.0	C.5	MO GLOBE VALVE (TEST)	103E1795/1	112
89	E51-F009	1	-8200	6.0	C.5	MO GLOBE VALVE (TEST)	103E1795/1	112
90	E51-F012	1	-8200	6.0	C.5	MO GLOBE VALVE (LO)	103E1795/1	112
91	E51-F037	1	-8200	6.0	C.5	MO GLOBE VALVE (ST SUP)	103E1795/1	112
92	E51-F045	1	-8200	6.0	C.5	MO GLOBE VALVE (STBYP)	103E1795/1	112
93	E51-F998*	1	-8200	6.0	C.5	GOVERNING VALVE (HO)	103E1795/1	112

Table 9A.6-2 Fire Hazard Analysis Equipment Database Sorted by Room — Reactor Building (Continued)

Item No.	MPL No	Elect Div.	Elev. Location	Location Number Coord.	Location Alpha Coord.	Description	System Drawing	Room No.
94	E51-F999*	1	-8200	6.0	C.5	TRIP & THROT VALVE	103E1795/1	112
95	E51-POT301	1	-8200	6.0	C.5	POS XTMR (F008)	103E1795/1	112
96	E51-POT302	1	-8200	6.0	C.5	POS XTMR (F009)	103E1795/1	112
97	T31-LT058A	1	-8200	5.9	C.5	LEVEL TRANSMITTER	107E6043/0	112
98	T31-LT059A	1	-8200	5.9	C.5	LEVEL TRANSMITTER	107E6043/0	112
99	U41-D101	1	-8200	6.1	D.3	RCIC PUMP ROOM HVH	107E5189/0	112
100	X-214	1	-7050	5.8	C.5	RCIC PUMP SUCTION	795E883/4	112
101	X-323A	1	-4700	5.8	C.4	SUPP CHAMBER WATER LEV	107E6043/0	112
102	X-323C	1	-6700	5.8	C.6	SUPP CHAMBER WATER LEV	107E6043/0	112
103	H23-P001*	N	-8200	5.5	A.3	MULTIPLEXER	----?----	116
104	H22-P008*	N	-8200	5.9	A.8	RHR HT EXCH SAMPLE RACK	10Q273-280	116
105	P91-P023*	N	-8200	5.9	A.8	RHR HX ELEC COND TRANS PNL	NT-5000390	116
106	C12-PT011A	1	-8200	4.7	A.8	PRESS TRANSMITTER	103E1789/0	117
107	C12-PT011D	4	-8200	3.3	A.8	PRESS TRANSMITTER	103E1789/0	117
108	D21-RE011	N	-8200	4.0	A.6	AREA RAD DETECTOR	299X701-171/0	117
109	E51-F003	1	-8200	4.0	A.5	CHECK VALVE	103E1795/1	117
110	U41-B012	N	-8200	4.1	A.5	HEATING COIL, R/B	107E5189/0	117
111	U41-TE011	N	-8200	4.1	A.5	TEMP ELEMENT	107E5189/0	117
112	U41-TT611	N	-8200	4.1	A.5	TEMP TRANS, R/B HVAC	107E5189/0	117
113	C12-D004-1*	N	-8200	4.7	B.2	HCU (GR 1 TYP OF 28)	103E1789/0	118
114	C12-F139A-1*	2	-8200	4.7	B.2	HCU AO VLV (TYP OF 28)	103E1789/0	118
115	C12-F139B-1*	3	-8200	4.7	B.2	HCU AO VLV (TYP OF 28)	103E1789/0	118
116	C12-F143-1*	N	-8200	4.7	B.2	HCU AO VLV (TYP OF 28)	103E1789/0	118
117	C12-LS129-1*	N	-8200	4.7	B.2	HCU LVL SW (TYP OF 28)	103E1789/0	118
118	C12-POS001-1*	N	-8200	4.7	B.2	FMCRD POS SW (TYP OF 28)	103E1789/0	118
119	C12-PS130-1*	N	-8200	4.7	B.2	HCU PR SW (TYP OF 28)	103E1789/0	118
120	C81-DPT301A	1	-8200	4.6	B.1	DIFF PRESS TRANS	299X701-146/0	118
121	C81-DPT401A	N	-8200	4.6	B.1	DIFF PRESS TRANS	299X701-146/0	118
122	C81-DPT404A	N	-8200	4.6	B.1	DIFF PRESS TRANS	796E357	118
123	E11-FT008A1	1	-8200	4.8	B.1	FLOW TRANSMITTER	103E1797/1	118
124	E11-FT008A2	1	-8200	4.8	B.1	FLOW TRANSMITTER	103E1797/1	118

Table 9A.6-2 Fire Hazard Analysis Equipment Database Sorted by Room — Reactor Building (Continued)

Item No.	MPL No	Elect Div.	Elev. Location	Location Number Coord.	Location Alpha Coord.	Description	System Drawing	Room No.
125	E11-PT004A	1	-8200	4.8	B.1	POS XMTR	103E1797/1	118
126	E11-PT004E	1	-8200	4.8	B.1	POS XMTR	103E1797/1	118
127	E11-PT005A	1	-8200	4.8	B.1	POS XMTR (PMP A)	103E1797/1	118
128	E11-PT009A	1	-8200	4.8	B.1	POS XMTR (RPV SUC A)	103E1797/1	118
129	E11-TT007A	N	-8200	4.8	B.1	TEMP XMTR (HX A OUT)	103E1797/1	118
130	E11-TT011A	N	-8200	4.8	B.1	TEMP XMTR (HX A OUT)	103E1797/1	118
131	H22-P001A*	1	-8200	4.6	B.2	CORE FLOW INST RACK A	10Q273-280	118
132	H22-P002A*	1	-8200	4.8	B.1	RHR A INST RACK	10Q273-280	118
133	D11-RE023	N	-8200	5.2	A.8	DRYWELL SUMP DRAIN DET.	107E6071/0	119
134	D11-RE024	N	-8200	5.2	A.4	DRYWELL SUMP DRAIN DET.	107E6071/0	119
135	K17-C002A	N	-8200	5.2	A.8	LCW PUMP - R/B SUMP A	103E1634/0	119
136	K17-C002C	N	-8200	5.2	A.8	LCW PUMP - R/B SUMP A	103E1634/0	119
137	K17-C102D	N	-8200	5.2	A.4	HCW PUMP - R/B SUMP D	103E1634/0	119
138	K17-C102I	N	-8200	5.2	A.4	HCW PUMP - R/B SUMP D	103E1634/0	119
139	K17-F032	N	-8200	5.2	A.8	AO VALVE	103E1634/0	119
140	K17-LE108D	N	-8200	5.2	A.4	LEVEL ELEMENT	103E1634/0	119
141	K17-LS007A	N	-8200	5.2	A.8	LEVEL SWITCH	103E1634/0	119
142	K17-LS008A	N	-8200	5.2	A.8	LEVEL SWITCH	103E1634/0	119
143	K17-LS009A	N	-8200	5.2	A.8	LEVEL SWITCH	103E1634/0	119
144	K17-LS106D	N	-8200	5.2	A.4	LEVEL SWITCH	103E1634/0	119
145	K17-LS107D	N	-8200	5.2	A.4	LEVEL SWITCH	103E1634/0	119
146	K17-LT108D	N	-8200	5.2	A.4	LEVEL TRANSMITTER	103E1634/0	119
147	K17-TE006	N	-8200	5.2	A.8	TEMP ELEMENT	103E1634/0	119
148	E11-B001B	2	-8200	1.5	F.3	HEAT EXCHANGER	103E1797/1	121
149	E11-F004B	2	-8200	1.9	E.8	MO GLOBE VALVE (HXOUT)	103E1797/1	121
150	E11-F043B	2	-8200	1.5	F.0	SO GLOBE VALVE	103E1797/1	121
151	E11-F044B	2	-8200	1.5	F.0	SO GLOBE VALVE	103E1797/1	121
152	E11-POT301B	2	-8200	1.9	E.8	POS XMTR (F004B)	103E1797/1	121
153	E11-TE006B	N	-8200	1.5	F.3	TEMP ELEMENT	103E1797/1	121
154	E11-TE007B	N	-8200	1.9	E.8	TEMP ELEMENT	103E1797/1	121
155	E11-TT006B	N	-8200	1.5	F.3	TEMP XMTR (HX B INL)	103E1797/1	121
156	K17-C102B	N	-8200	1.8	F.6	HCW PUMP - R/B SUMP B	103E1634/0	121

Table 9A.6-2 Fire Hazard Analysis Equipment Database Sorted by Room — Reactor Building (Continued)

Item No.	MPL No	Elect Div.	Elev. Location	Location Number Coord.	Location Alpha Coord.	Description	System Drawing	Room No.
157	K17-C102G	N	-8200	1.8	F.6	HCW PUMP - R/B SUMP B	103E1634/0	121
158	K17-LE108B	N	-8200	1.8	F.6	LEVEL ELEMENT	103E1634/0	121
159	K17-LS106B	N	-8200	1.8	F.6	LEVEL SWITCH	103E1634/0	121
160	K17-LS107B	N	-8200	1.8	F.6	LEVEL SWITCH	103E1634/0	121
161	K17-LT108B	N	-8200	1.8	F.6	LEVEL TRANSMITTER	103E1634/0	121
162	P21-F013B	2	-8200	1.5	F.5	MO GLOBE VALVE	107E5112/0	121
163	P21-F055B	2	-8200	1.5	F.5	MO GATE VALVE	107E5112/0	121
164	P21-F055E	2	-8200	1.5	F.5	MO GATE VALVE	107E5112/0	121
165	P21-FT008B	2	-8200	1.5	F.5	FLOW XMTR (RHR HX B)	107E5112/0	121
166	P21-TE009B	2	-8200	1.5	F.5	TEMP ELEM (RHR HX B)	107E5112/0	121
167	D21-RE025	N	-8200	2.0	E.9	AREA RAD DETECTOR	299X701-171/0	121
168	E11-C001B	2	-8200	2.2	E.7	RHR PUMP B	103E1797/1	121
169	E11-C002B	2	-8200	2.9	E.7	RHR B FILL PUMP	103E1797/1	121
170	E11-F001B	2	-7085	2.7	E.6	MO GATE VALVE (PSUCT)	103E1797/1	121
171	E11-F012B	2	-8200	2.7	E.6	MO GATE VALVE (RSUCT)	103E1797/1	121
172	E11-F013B	2	-8200	2.3	E.8	MO GLOBE VALVE (HXBYP)	103E1797/1	121
173	E11-F014B	2	-8200	2.3	E.7	MO GATE VALVE (FPC)	103E1797/1	121
174	E11-F015B	2	-8200	2.3	E.7	MO GATE VALVE (FPC)	103E1797/1	121
175	E11-F029B	2	-8200	2.3	E.7	MO GATE VALVE (SPWS)	103E1797/1	121
176	E11-F030B	2	-8200	2.3	E.7	MO GATE VALVE (SPWS)	103E1797/1	121
177	E11-POT302B	2	-8200	2.3	E.8	POS XMTR (FO13B)	103E1797/1	121
178	E11-POT303B	2	-8200	2.3	E.7	POS XMTR (FO30B)	103E1797/1	121
179	E11-TE011B	N	-8200	2.3	E.7	TEMP ELEMENT	103E1797/1	121
180	E31-TE008E	1	-8200	2.2	E.7	RHR B AMB TEMP ELEM	103E1792/1	121
181	E31-TE008F	2	-8200	2.2	E.7	RHR B AMB TEMP ELEM	103E1792/1	121
182	E31-TE008G	3	-8100	2.2	E.7	RHR B AMB TEMP ELEM	103E1792/1	121
183	E31-TE008H	4	-8200	2.2	E.7	RHR B AMB TEMP ELEM	103E1792/1	121
184	E31-TE031E	N	-8200	2.2	E.7	RHR B DIFF TEMP ELEM	103E1792/1	121
185	E31-TE032E	N	-8200	2.2	E.7	RHR B DIFF TEMP ELEM	103E1792/1	121
186	U41-D105	2	-8200	2.7	E.9	RHR PUMP (B) ROOM HVH	107E5189/0	121
187	X-202	2	-7085	2.7	E.6	RHR B SUP POOL SUCT	795E880/3	121
188	E11-FT008B1	2	-8200	1.4	E.2	FLOW TRANSMITTER	103E1797/1	122
189	E11-FT008B2	2	-8200	1.4	E.2	FLOW TRANSMITTER	103E1797/1	122
190	E11-FT012B	2	-8200	1.4	E.2	FLOW TRANSMITTER	103E1797/1	122

Table 9A.6-2 Fire Hazard Analysis Equipment Database Sorted by Room — Reactor Building (Continued)

Item No.	MPL No	Elect Div.	Elev. Location	Location Number Coord.	Location Alpha Coord.	Description	System Drawing	Room No.
191	E11-PT004B	2	-8200	1.4	E.2	POS XMTR	103E1797/1	122
192	E11-PT004F	2	-8200	1.4	E.2	POS XMTR	103E1797/1	122
193	E11-PT005B	2	-8200	1.4	E.2	POS XMTR (PMP B)	103E1797/1	122
194	E11-PT009B	2	-8200	1.4	E.2	POS XMTR (RPV SUC B)	103E1797/1	122
195	E11-TT007B	N	-8200	1.4	E.2	TEMP XMTR (HX B OUT)	103E1797/1	122
196	E11-TT011B	N	-8200	1.4	E.2	TEMP XMTR (HX B OUT)	103E1797/1	122
197	E22-F001B	2	-8200	2.2	E.2	MO GATE VALVE (CST)	107E6008/0	122
198	E22-F006B	2	-7085	2.2	D.7	MO GATE VALVE (PSUCT)	107E6008/0	122
199	E22-FT008B1	2	-8200	1.4	D.6	FLOW TRANSMITTER	107E6008/0	122
200	E22-FT008B2	2	-8200	1.4	D.6	FLOW TRANSMITTER	107E6008/0	122
201	E22-PT002B	2	-8200	1.4	D.6	PRESS TRANSMITTER	107E6008/0	122
202	E22-PT003B	2	-8200	1.4	D.6	PRESS TRANSMITTER	107E6008/0	122
203	E22-PT006B	2	-8200	1.4	D.6	PRESS TRANSMITTER	107E6008/0	122
204	E22-PT006F	2	-8200	1.4	D.6	PRESS TRANSMITTER	107E6008/0	122
205	E22-PT007B	2	-8200	1.3	D.7	PRESS TRANSMITTER	107E6008/0	122
206	H22-P002B*	2	-8200	1.4	E.1	RHR B INST RACK	10Q273-280	122
207	H22-P003B*	2	-8200	1.4	D.7	HPCS B INSTR RACK	10Q273-280	122
208	T31-LT058B	2	-8200	2.1	D.5	LEVEL TRANSMITTER	107E6043/0	122
209	T31-LT059B	2	-8200	2.1	D.5	LEVEL TRANSMITTER	107E6043/0	122
210	X-210	2	-7085	2.2	D.7	HPCF PUMP B SUCTION	795E876/4	122
211	X-323E	3	-6700	2.2	D.9	SUPP CHAMBER WATER LEV	107E6043/0	122
212	E22-C001B	2	-8200	2.2	E.3	HPCF PUMP B	107E6008/0	122
213	E22-F008B	2	-8200	2.2	E.3	MO GLOBE VALVE (TEST)	107E6008/0	122
214	E22-F009B	2	-8200	2.2	E.3	MO GLOBE VALVE (TEST)	107E6008/0	122
215	E22-F010B	2	-8200	2.2	E.3	MO GATE VALVE (MINFLO)	107E6008/0	122
216	E22-POE301B	2	-8200	2.2	E.3	PRIMARY POS ELEMENT	107E6008/0	122
217	E22-POE302B	2	-8200	2.2	E.3	PRIMARY POS ELEMENT	107E6008/0	122
218	E22-POT301B	2	-8200	2.2	E.3	POS TRANSMITTER	107E6008/0	122
219	E22-POT302B	2	-8200	2.2	E.3	POS TRANSMITTER	107E6008/0	122
220	U41-D106	2	-8200	1.7	E.3	HPCF PUMP (B) ROOM HVH	107E5189/0	122
221	H23-P002*	N	-8200	4.2	F.8	MULTIPLEXER	----?----	123
222	H23-P003*	N	-8200	4.0	F.8	MULTIPLEXER	----?----	123
223	H23-P004*	N	-8200	3.8	F.8	MULTIPLEXER	----?----	123

Table 9A.6-2 Fire Hazard Analysis Equipment Database Sorted by Room — Reactor Building (Continued)

Item No.	MPL No	Elect Div.	Elev. Location	Location Number Coord.	Location Alpha Coord.	Description	System Drawing	Room No.
224	K17-C301A	N	-8200	2.4	F.6	SD PUMP -R/B SUMP	103E1634/0	123
225	K17-C301B	N	-8200	2.4	F.6	SD PUMP -R/B SUMP	103E1634/0	123
226	K17-LS301	N	-8200	2.4	F.6	LEVEL SWITCH	103E1634/0	123
227	K17-LS302	N	-8200	2.4	F.6	LEVEL SWITCH	103E1634/0	123
228	K17-LS303	N	-8200	2.4	F.6	LEVEL SWITCH	103E1634/0	123
229	K17-C002B	N	-8200	2.8	F.2	LCW PUMP - R/B SUMP B	103E1634/0	124
230	K17-C002D	N	-8200	2.8	F.2	LCW PUMP - R/B SUMP B	103E1634/0	124
231	K17-C102E	N	-8200	2.8	F.7	HCW PUMP - R/B SUMP E	103E1634/0	124
232	K17-C102J	N	-8200	2.8	F.7	HCW PUMP - R/B SUMP E	103E1634/0	124
233	K17-LE108E	N	-8200	2.8	F.7	LEVEL ELEMENT	103E1634/0	124
234	K17-LS007B	N	-8200	2.8	F.2	LEVEL SWITCH	103E1634/0	124
235	K17-LS008B	N	-8200	2.8	F.2	LEVEL SWITCH	103E1634/0	124
236	K17-LS009B	N	-8200	2.8	F.2	LEVEL SWITCH	103E1634/0	124
237	K17-LS106E	N	-8200	2.8	F.7	LEVEL SWITCH	103E1634/0	124
238	K17-LS107E	N	-8200	2.8	F.7	LEVEL SWITCH	103E1634/0	124
239	K17-LT108E	N	-8200	2.8	F.7	LEVEL TRANSMITTER	103E1634/0	124
240	C12-D004-2*	N	-8200	3.2	E.8	HCU (GR 2 TYP OF 25)	103E1789/0	125
241	C12-F139A-2*	2	-8200	3.2	E.8	HCU AO VLV (TYP OF 25)	103E1789/0	125
242	C12-F139B-2*	3	-8200	3.2	E.8	HCU AO VLV (TYP OF 25)	103E1789/0	125
243	C12-F143-2*	N	-8200	3.2	E.8	HCU AO VLV (TYP OF 25)	103E1789/0	125
244	C12-LS129-2*	N	-8200	3.2	E.8	HCU LVL SW (TYP OF 25)	103E1789/0	125
245	C12-POS001-2*	N	-8200	3.2	E.8	FMCRD POS SW (TYP OF 25)	103E1789/0	125
246	C12-PS130-2*	N	-8200	3.2	E.8	HCU PR SW (TYP OF 25)	103E1789/0	125
247	C81-DPT301B	2	-8200	3.4	E.8	DIFF PRESS TRANS	299X701-146/0	125
248	C81-DPT401B	N	-8200	3.4	E.8	DIFF PRESS TRANS	299X701-146/0	125
249	C81-DPT404B	N	-8200	3.4	E.8	DIFF PRESS TRANS	796E357	125
250	H22-P001B*	2	-8200	3.4	E.8	CORE FLOW INST RACK B	10Q273-280	125
251	C12-FQ001-1*	N	-8200	4.1	F.5	FLOW INTEGRATOR	103E1789/0	126
252	C12-FQ001-2*	N	-8200	4.1	F.5	FLOW INTEGRATOR	103E1789/0	126
253	C12-FQ001-3*	N	-8200	4.1	F.5	FLOW INTEGRATOR	103E1789/0	126
254	C12-FQ001-4*	N	-8200	4.1	F.5	FLOW INTEGRATOR	103E1789/0	126
255	C12-FQ002*	N	-8200	4.1	F.5	FLOW INTEGRATOR	103E1789/0	126
256	C12-PT011B	2	-8200	3.3	F.2	PRESS TRANSMITTER	103E1789/0	126
257	C12-PT011C	3	-8200	4.7	F.2	PRESS TRANSMITTER	103E1789/0	126

Table 9A.6-2 Fire Hazard Analysis Equipment Database Sorted by Room — Reactor Building (Continued)

Item No.	MPL No	Elect Div.	Elev. Location	Location Number Coord.	Location Alpha Coord.	Description	System Drawing	Room No.
258	D21-RE012	N	-8200	4.0	F.6	AREA RAD DETECTOR	299X701-171/0	126
259	U41-B013	N	-8200	4.1	F.5	HEATING COIL, R/B	107E5189/0	126
260	U41-TE012	N	-8200	4.1	F.5	TEMP ELEMENT	107E5189/0	126
261	U41-TT612	N	-8200	4.1	F.5	TEMP TRANS, R/B HVAC	107E5189/0	126
262	C12-D004-3*	N	-8200	4.7	E.8	HCU (GR 3 TYP OF 25)	103E1789/0	129
263	C12-F041	N	-8200	4.0	E.9	SO VALVE	103E1789/0	129
264	C12-F042	N	-8200	4.0	E.9	SO VALVE	103E1789/0	129
265	C12-F043	N	-8200	4.0	E.9	AO VALVE	103E1789/0	129
266	C12-F044	N	-8200	4.0	E.9	AO VALVE	103E1789/0	129
267	C12-F047	N	-8200	4.0	E.9	AO VALVE	103E1789/0	129
268	C12-F048A	N	-8200	4.0	E.9	AO VALVE	103E1789/0	129
269	C12-F048B	N	-8200	4.0	E.9	AO VALVE	103E1789/0	129
270	C12-F049A	N	-8200	4.0	E.9	AO VALVE	103E1789/0	129
271	C12-F049B	N	-8200	4.0	E.9	AO VALVE	103E1789/0	129
272	C12-F139A-3*	2	-8200	4.7	E.8	HCU AO VLV (TYP OF 25)	103E1789/0	129
273	C12-F139B-3*	3	-8200	4.7	E.8	HCU AO VLV (TYP OF 25)	103E1789/0	129
274	C12-F143-3*	N	-8200	4.7	E.8	HCU AO VLV (TYP OF 25)	103E1789/0	129
275	C12-FE001-1*	N	-8200	4.1	E.9	FLOW ELEMENT (GROUP)	103E1789/0	129
276	C12-FE001-2*	N	-8200	4.1	E.9	FLOW ELEMENT (GROUP)	103E1789/0	129
277	C12-FE001-3*	N	-8200	4.1	E.9	FLOW ELEMENT (GROUP)	103E1789/0	129
278	C12-FE001-4*	N	-8200	4.1	E.9	FLOW ELEMENT (GROUP)	103E1789/0	129
279	C12-FE002*	N	-8200	4.1	E.9	FLOW ELEMENT (COMBINED)	103E1789/0	129
280	C12-LS129-3*	N	-8200	4.7	E.8	HCU LVL SW (TYP OF 25)	103E1789/0	129
281	C12-POS001-3*	N	-8200	4.7	E.8	FMCRD POS SW (TYP OF 25)	103E1789/0	129
282	C12-PS130-3*	N	-8200	4.7	E.8	HCU PR SW (TYP OF 25)	103E1789/0	129
283	C81-DPT301C	3	-8200	4.5	E.8	DIFF PRESS TRANS	299X701-146/0	129
284	C81-DPT401C	N	-8200	4.5	E.8	DIFF PRESS TRANS	299X701-146/0	129
285	C81-DPT404C	N	-8200	4.5	E.8	DIFF PRESS TRANS	796E357	129
286	H22-P001C*	3	-8200	4.6	E.8	CORE FLOW INST RACK C	10Q273-280	129
287	E11-FT008C1	3	-8200	6.6	E.2	FLOW TRANSMITTER	103E1797/1	130
288	E11-FT008C2	3	-8200	6.6	E.2	FLOW TRANSMITTER	103E1797/1	130
289	E11-PT004C	3	-8200	6.6	E.2	POS XMTR	103E1797/1	130
290	E11-PT004G	3	-8200	6.6	E.2	POS XMTR	103E1797/1	130

Table 9A.6-2 Fire Hazard Analysis Equipment Database Sorted by Room — Reactor Building (Continued)

Item No.	MPL No	Elect Div.	Elev. Location	Location Number Coord.	Location Alpha Coord.	Description	System Drawing	Room No.
291	E11-PT005C	3	-8200	6.6	E.2	POS XMTR (PMP C)	103E1797/1	130
292	E11-PT009C	3	-8200	6.6	E.2	POS XMTR (RPV SUC C)	103E1797/1	130
293	E11-TT007C	N	-8200	6.6	E.2	TEMP XMTR (HX C OUT)	103E1797/1	130
294	E11-TT011C	N	-8200	6.6	E.2	TEMP XMTR (HX C OUT)	103E1797/1	130
295	E22-F001C	3	-8200	5.8	E.2	MO GATE VALVE (CST)	107E6008/0	130
296	E22-F006C	3	-7085	5.8	D.7	MO GATE VALVE (PSUCT)	107E6008/0	130
297	E22-FT008C1	3	-8200	6.6	D.7	FLOW TRANSMITTER	107E6008/0	130
298	E22-FT008C2	3	-8200	6.6	D.7	FLOW TRANSMITTER	107E6008/0	130
299	E22-PT002C	3	-8200	6.6	D.7	PRESS TRANSMITTER	107E6008/0	130
300	E22-PT003C	3	-8200	6.6	D.7	PRESS TRANSMITTER	107E6008/0	130
301	E22-PT006C	3	-8200	6.6	D.7	PRESS TRANSMITTER	107E6008/0	130
302	E22-PT006G	3	-8200	6.6	D.7	PRESS TRANSMITTER	107E6008/0	130
303	E22-PT007C	3	-8200	6.6	D.8	PRESS TRANSMITTER	107E6008/0	130
304	H22-P002C*	3	-8200	6.6	E.1	RHR C INST RACK	10Q273-280	130
305	H22-P003C*	3	-8200	6.6	D.8	HPCS C INSTR RACK	10Q273-280	130
306	T31-LT058C	3	-8200	5.9	E.0	LEVEL TRANSMITTER	107E6043/0	130
307	X-211	3	-7085	5.8	D.7	HPCF PUMP C SUCTION	795E876/4	130
308	X-323D	4	-6700	5.8	D.9	SUPP CHAMBER WATER LEV	107E6043/0	130
309	E22-C001C	3	-8200	5.7	E.3	HPCF PUMP C	107E6008/0	130
310	E22-F008C	3	-8200	5.7	E.3	MO GLOBE VALVE (TEST)	107E6008/0	130
311	E22-F009C	3	-8200	5.7	E.3	MO GLOBE VALVE (TEST)	107E6008/0	130
312	E22-F010C	3	-8200	5.7	E.3	MO GATE VALVE (MINFLO)	107E6008/0	130
313	E22-POE301C	3	-8200	5.7	E.3	PRIMARY POS ELEMENT	107E6008/0	130
314	E22-POE302C	3	-8200	5.7	E.3	PRIMARY POS ELEMENT	107E6008/0	130
315	E22-POT301C	3	-8200	5.7	E.3	POS TRANSMITTER	107E6008/0	130
316	E22-POT302C	3	-8200	5.7	E.3	POS TRANSMITTER	107E6008/0	130
317	U41-D102	3	-8200	6.3	E.3	HPCF PUMP (C) ROOM HVH	107E5189/0	130
318	E11-B001C	3	-8200	6.4	F.3	HEAT EXCHANGER	103E1797/1	132
319	E11-F004C	3	-8200	6.1	E.8	MO GLOBE VALVE (HXOUT)	103E1797/1	132
320	E11-F043C	3	-8200	6.5	F.0	SO GLOBE VALVE	103E1797/1	132
321	E11-F044C	3	-8200	6.5	F.0	SO GLOBE VALVE	103E1797/1	132
322	E11-POT301C	3	-8200	6.1	E.8	POS XMTR (F004C)	103E1797/1	132

Table 9A.6-2 Fire Hazard Analysis Equipment Database Sorted by Room — Reactor Building (Continued)

Item No.	MPL No	Elect Div.	Elev. Location	Location Number Coord.	Location Alpha Coord.	Description	System Drawing	Room No.
323	E11-TE006C	N	-8200	6.4	F.3	TEMP ELEMENT	103E1797/1	132
324	E11-TE007C	N	-8200	6.1	E.8	TEMP ELEMENT	103E1797/1	132
325	E11-TT006C	N	-8200	6.4	F.3	TEMP XMTR (HX C INL)	103E1797/1	132
326	P21-F013C	3	-8200	6.5	F.5	MO GLOBE VALVE	107E5112/0	132
327	P21-F055C	3	-8200	6.5	F.5	MO GATE VALVE	107E5112/0	132
328	P21-F055F	3	-8200	6.5	F.5	MO GATE VALVE	107E5112/0	132
329	P21-FT008C	3	-8200	6.5	F.5	FLOW XMTR (RHR HX C)	107E5112/0	132
330	P21-TE009C	3	-8200	6.5	F.5	TEMP ELEM (RHR HX C)	107E5112/0	132
331	E11-C001C	3	-8200	5.8	E.7	RHR PUMP C	103E1797/1	132
332	E11-C002C	3	-8200	5.1	E.7	RHR C FILL PUMP	103E1797/1	132
333	E11-F001C	3	-7085	5.2	E.6	MO GATE VALVE (PSUCT)	103E1797/1	132
334	E11-F012C	3	-8200	5.5	E.6	MO GATE VALVE (RSUCT)	103E1797/1	132
335	E11-F013C	3	-8200	5.8	E.8	MO GLOBE VALVE (HXBYP)	103E1797/1	132
336	E11-F014C	3	-8200	5.8	E.7	MO GATE VALVE (FPC)	103E1797/1	132
337	E11-F015C	3	-8200	5.8	E.7	MO GATE VALVE (FPC)	103E1797/1	132
338	E11-F029C	3	-8200	5.8	E.7	MO GATE VALVE (SPWS)	103E1797/1	132
339	E11-F030C	3	-8200	5.0	E.7	MO GATE VALVE (SPWS)	103E1797/1	132
340	E11-POT302C	3	-8200	5.8	E.8	POS XMTR (FO13C)	103E1797/1	132
341	E11-POT303C	3	-8200	5.0	E.7	POS XMTR (FO30C)	103E1797/1	132
342	E11-TE011C	N	-8200	5.8	E.7	TEMP ELEMENT	103E1797/1	132
343	E31-TE008J	1	-8200	5.8	E.7	RHR C AMB TEMP ELEM	103E1792/1	132
344	E31-TE008K	2	-8200	5.8	E.7	RHR C AMB TEMP ELEM	103E1792/1	132
345	E31-TE008L	3	-8200	5.8	E.7	RHR C AMB TEMP ELEM	103E1792/1	132
346	E31-TE008M	4	-8200	5.8	E.7	RHR C AMB TEMP ELEM	103E1792/1	132
347	E31-TE031J	N	-8200	5.8	E.7	RHR C DIFF TEMP ELEM	103E1792/1	132
348	E31-TE032J	N	-8200	5.8	E.7	RHR C DIFF TEMP ELEM	103E1792/1	132
349	U41-D104	3	-8200	5.3	E.9	RHR PUMP (C) ROOM HVH	107E5189/0	132
350	X-203	3	-7085	5.2	E.6	RHR C SUP POOL SUCT	795E880/3	132
351	K17-C102C	N	-8200	6.2	F.7	HCW PUMP - R/B SUMP C	103E1634/0	132
352	K17-C102H	N	-8200	6.2	F.7	HCW PUMP - R/B SUMP C	103E1634/0	132
353	K17-LE108C	N	-8200	6.2	F.7	LEVEL ELEMENT	103E1634/0	132
354	K17-LS106C	N	-8200	6.2	F.7	LEVEL SWITCH	103E1634/0	132
355	K17-LS107C	N	-8200	6.2	F.7	LEVEL SWITCH	103E1634/0	132
356	K17-LT108C	N	-8200	6.2	F.7	LEVEL TRANSMITTER	103E1634/0	132

Table 9A.6-2 Fire Hazard Analysis Equipment Database Sorted by Room — Reactor Building (Continued)

Item No.	MPL No	Elect Div.	Elev. Location	Location Number Coord.	Location Alpha Coord.	Description	System Drawing	Room No.
357	C12-B001	N	-8200	5.8	F.6	ELECTRIC HEATER	103E1789/0	133
358	C12-C001A	N	-8200	5.5	F.5	CRD PUMP A	103E1789/0	133
359	C12-C001B	N	-8200	5.2	F.5	CRD PUMP B	103E1789/0	133
360	C12-C002A*	N	-8200	5.8	F.3	OIL PUMP AND COOLER A	103E1789/0	133
361	C12-C002B*	N	-8200	5.8	F.5	OIL PUMP AND COOLER B	103E1789/0	133
362	C12-D011A	N	-8200	5.6	F.5	MANUAL/AUTO STATION	103E1789/0	133
363	C12-D011B	N	-8200	5.3	F.5	MANUAL/AUTO STATION	103E1789/0	133
364	C12-DPI001	N	-8200	5.2	F.2	DIFF PRESS INDICATOR	103E1789/0	133
365	C12-DPI006	N	-8200	5.2	F.2	DIFF PRESS INDICATOR	103E1789/0	133
366	C12-DPT001	N	-8200	5.2	F.2	DIFF PRESS TRANSMITTER	103E1789/0	133
367	C12-DPT006	N	-8200	5.2	F.2	DIFF PRESS TRANSMITTER	103E1789/0	133
368	C12-DPT009	N	-8200	5.2	F.2	DIFF PRESS TRANSMITTER	103E1789/0	133
369	C12-E/P001	N	-8200	5.2	F.2	E/P CONVERTER	103E1789/0	133
370	C12-F010B	N	-8200	5.2	F.2	FCV: B	103E1789/0	133
371	C12-F014	N	-8200	5.5	F.5	MO CLOBE VALVE	103E1789/0	133
372	C12-F021	N	-8200	5.5	F.5	MO GLOBE VALVE	103E1789/0	133
373	C12-FI007	N	-8200	5.2	F.2	FLOW INDICATOR	103E1789/0	133
374	C12-FT007	N	-8200	5.2	F.2	FLOW TRANSMITTER	103E1789/0	133
375	C12-PI015	N	-8200	5.2	F.2	PRESS INDICATOR	103E1789/0	133
376	C12-PS401A*	N	-8200	5.6	F.5	PRESS SWITCH (OIL)	103E1789/0	133
377	C12-PS401B*	N	-8200	5.3	F.5	PRESS SWITCH (OIL)	103E1789/0	133
378	C12-PS402A*	N	-8200	5.6	F.5	PRESS SWITCH (OIL)	103E1789/0	133
379	C12-PS402B*	N	-8200	5.3	F.5	PRESS SWITCH (OIL)	103E1789/0	133
380	C12-PS403A*	N	-8200	5.6	F.5	PRESS SWITCH (OIL)	103E1789/0	133
381	C12-PS403B*	N	-8200	5.3	F.5	PRESS SWITCH (OIL)	103E1789/0	133
382	C12-PT003A	N	-8200	5.6	F.5	PRESS TRANSMITTER	103E1789/0	133
383	C12-PT003B	N	-8200	5.3	F.5	PRESS TRANSMITTER	103E1789/0	133
384	C12-PT015	N	-8200	5.2	F.2	PRESS TRANSMITTER	103E1789/0	133
385	C12-TE005	N	-8200	5.2	F.2	TEMP ELEMENT	103E1789/0	133
386	C12-TIS001A*	N	-8200	5.2	F.2	TEMP IND SWITCH	103E1789/0	133
387	C12-TIS001B*	N	-8200	5.2	F.2	TEMP IND SWITCH	103E1789/0	133
388	C12-TT005	N	-8200	5.2	F.2	TEMP TRANSMITTER	103E1789/0	133

Table 9A.6-2 Fire Hazard Analysis Equipment Database Sorted by Room — Reactor Building (Continued)

Item No.	MPL No	Elect Div.	Elev. Location	Location Number Coord.	Location Alpha Coord.	Description	System Drawing	Room No.
389	H22-P006A*	N	-8200	5.6	F.5	CRD PUMP A INST RACK	10Q273-280	133
390	H22-P006B*	N	-8200	5.3	F.5	CRD PUMP B INST RACK	10Q273-280	133
391	H22-P006*	N	-8200	5.2	F.2	CRD HYD SYS INST RACK	10Q273-280	133
392	T31-TE053J	N	-8200	5.2	F.3	TEMP ELEMENT	107E6043/0	133
393	T31-TE053K	N	-8200	5.2	F.6	TEMP ELEMENT	107E6043/0	133
394	T31-TE053L	N	-8200	5.6	F.3	TEMP ELEMENT	107E6043/0	133
395	T31-TE053M	N	-8200	5.6	F.6	TEMP ELEMENT	107E6043/0	133
396	C12-F010A	N	-8200	5.5	F.7	FCV: A	103E1789/0	133
397	G51-C001	N	-8200	2.2	C.0	SPCU PUMP	107E6051/0	140
398	G51-F001	N	-7050	2.3	B.9	MO GATE VALVE (ISOL)	107E6051/0	140
399	G51-F002	N	-8200	2.2	C.0	MO GATE VALVE (ISOL)	107E6051/0	140
400	G51-F004	N	-8200	2.2	C.0	AO VALVE	107E6051/0	140
401	G51-F005A	N	-8200	2.2	C.0	AO VALVE	107E6051/0	140
402	G51-F005B	N	-8200	2.2	C.0	AO VALVE	107E6051/0	140
403	G51-F008	N	-8200	2.2	C.0	MO GLOBE VALVE (RECIRC)	107E6051/0	140
404	G51-F009	N	-8200	2.2	C.0	MO GATE VALVE (CST)	107E6051/0	140
405	G51-F014	N	-8200	2.2	C.0	MO GLOBE VALVE (FPC SUP)	107E6051/0	140
406	G51-FT005	N	-8200	2.2	C.0	FLOW TRANSMITTER	107E6051/0	140
407	G51-PIS001	N	-8200	2.2	C.0	PRESS IND SWITCH	107E6051/0	140
408	T31-LT058D	4	-8200	2.2	C.1	LEVEL TRANSMITTER	107E6043/0	140
409	X-216	N	-7050	2.4	B.8	SPCU PUMP SUCTION	107E6051/0	140
410	X-323B	2	-4700	2.2	C.4	SUPP CHAMBER WATER LEV	107E6043/0	140
411	X-323F	2	-6700	2.2	C.6	SUPP CHAMBER WATER LEV	107E6043/0	140
412	D21-RE009	N	-8200	2.0	B.6	AREA RAD DETECTOR	299X701-171/0	140
413	U41-D115-1	N	-8200	1.8	B.5	R/A SPCU R00M HVH	107E5189/0	140
414	U41-D115-2	N	-8200	1.8	B.5	R/A SPCU R00M HVH	107E5189/0	140
415	E31-TE009E	1	-8200	1.6	C.0	CUW NR/HX AMB TEMP ELEM	103E1792/1	141
416	E31-TE009F	2	-8200	1.6	C.0	CUW NR/HX AMB TEMP ELEM	103E1792/1	141
417	E31-TE009G	3	-8200	1.6	C.0	CUW NR/HX AMB TEMP ELEM	103E1792/1	141

Table 9A.6-2 Fire Hazard Analysis Equipment Database Sorted by Room — Reactor Building (Continued)

Item No.	MPL No	Elect Div.	Elev. Location	Location Number Coord.	Location Alpha Coord.	Description	System Drawing	Room No.
418	E31-TE009H	4	-8200	1.6	C.0	CUW NR/HX AMB TEMP ELEM	103E1792/1	141
419	E31-TE033E	N	-8200	1.6	C.0	CUW NR/HX DIFF TEMP ELEM	103E1792/1	141
420	E31-TE034E	N	-8200	1.6	C.0	CUW NR/HX DIFF TEMP ELEM	103E1792/1	141
421	G31-B002A	N	-8200	1.8	C.5	NON REGEN. HT. EXCH.	107E5051/0	141
422	G31-B002B	N	-8200	1.5	C.5	NON REGEN. HT. EXCH.	107E5051/0	141
423	G31-B002C	N	-8200	1.8	C.5	NON REGEN. HT. EXCH.	107E5051/0	141
424	G31-B002D	N	-8200	1.5	C.5	NON REGEN. HT. EXCH.	107E5051/0	141
425	G31-TE005A	N	-8200	1.8	C.7	TEMP ELEMENT	107E5051/0	141
426	G31-TE005B	N	-8200	1.5	C.7	TEMP ELEMENT	107E5051/0	141
427	G31-TE006	N	-8200	1.6	C.3	TEMP ELEMENT	107E5051/0	141
428	P21-E/P606A*	N	-8200	1.8	C.0	E/P CONVERT (TCV-CUW)	107E5112/0	141
429	P21-E/P606B*	N	-8200	1.4	C.0	E/P CONVERT (TCV-CUW)	107E5112/0	141
430	P21-F101A	N	-8200	1.6	C.0	MO GATE VALVE	107E5112/0	141
431	P21-F101B	N	-8200	1.4	C.0	MO GATE VALVE	107E5112/0	141
432	G31-FR104	N	-8200	1.4	B.3	FLOW RECORDER	107E5051/0	142
433	G31-PT012	N	-8200	1.9	B.2	PRESS TRANSMITTER	107E5051/0	142
434	H22-P007*	N	-8200	1.9	B.2	REA COOL CU SYS INST RACK	10Q273-280	142
435	H22-P009*	N	-8200	1.3	B.8	SPD SYS SAMPLING RACK	10Q273-280	142
436	G31-F219	N	-8200	2.5	B.3	AO BALL VALVE	107E5051/0	144
437	K17-F001	N	-8200	2.7	B.3	AO VALVE	103E1634/0	144
438	K17-F004	N	-8200	2.7	B.3	AO VALVE	103E1634/0	144
439	K17-LE001	N	-8200	2.7	B.3	LEVEL ELEMENT	103E1634/0	144
440	K17-LI001	N	-8200	2.7	B.3	LEVEL INDICATOR	103E1634/0	144
441	K17-LRS001	N	-8200	2.7	B.3	LEVEL RECORDER SWITCH	103E1634/0	144
442	K17-LS001A	N	-8200	2.7	B.3	LEVEL SWITCH	103E1634/0	144
443	K17-LS001B	N	-8200	2.7	B.3	LEVEL SWITCH	103E1634/0	144
444	K17-LT001	N	-8200	2.7	B.3	LEVEL TRANSMITTER	103E1634/0	144
445	E31-TE010A	1	-8200	1.5	A.8	CUW SUC FLO TEMP ELEM	103E1792/1	146
446	E31-TE010C	3	-8200	1.5	A.8	CUW SUC FLO TEMP ELEM	103E1792/1	146

Table 9A.6-2 Fire Hazard Analysis Equipment Database Sorted by Room — Reactor Building (Continued)

Item No.	MPL No	Elect Div.	Elev. Location	Location Number Coord.	Location Alpha Coord.	Description	System Drawing	Room No.
447	E31-TE011A	1	-8200	1.5	A.8	CUW RET FLO TEMP ELEM	103E1792/1	146
448	E31-TE011C	3	-8200	1.5	A.8	CUW RET FLO TEMP ELEM	103E1792/1	146
449	E31-TE012A	1	-8200	1.5	A.8	CUW B/D FLO TEMP ELEM	103E1792/1	146
450	E31-TE012C	3	-8200	1.5	A.8	CUW B/D FLO TEMP ELEM	103E1792/1	146
451	G31-C001B	N	-8200	1.5	A.7	CUW PUMP B	107E5051/0	146
452	E31-TE009J	1	-8200	2.5	B.3	CUW V RM AMB TEMP ELEM	103E1792/1	443
453	E31-TE009K	2	-8200	2.5	B.3	CUW V RM AMB TEMP ELEM	103E1792/1	443
454	E31-TE009L	3	-8200	2.5	B.3	CUW V RM AMB TEMP ELEM	103E1792/1	443
455	E31-TE009M	4	-8200	2.5	B.3	CUW V RM AMB TEMP ELEM	103E1792/1	443
456	E31-TE010B	2	-8200	2.0	A.8	CUW SUC FLO TEMP ELEM	103E1792/1	147
457	E31-TE010D	4	-8200	2.0	A.8	CUW SUC FLO TEMP ELEM	103E1792/1	147
458	E31-TE011B	2	-8200	2.0	A.8	CUW RET FLO TEMP ELEM	103E1792/1	147
459	E31-TE011D	4	-8200	2.0	A.8	CUW RET FLO TEMP ELEM	103E1792/1	147
460	E31-TE012B	2	-8100	2.0	A.8	CUW B/D FLO TEMP ELEM	103E1792/1	147
461	E31-TE012D	4	-8200	2.0	A.8	CUW B/D FLO TEMP ELEM	103E1792/1	147
462	E31-TE033J	N	-8200	2.0	A.8	CUW V RM DIFF TEMP ELEM	103E1792/1	147
463	E31-TE034J	N	-8200	2.0	A.8	CUW V RM DIFF TEMP ELEM	103E1792/1	147
464	G31-C001A	N	-8200	2.0	A.7	CUW PUMP A	107E5051/0	147
465	G31-C002A*	N	-8200	2.4	A.7	CUW HOLDING PUMP A	107E5051/0	149
466	G31-C002B*	N	-8200	2.8	A.7	CUW HOLDING PUMP B	107E5051/0	149
467	T53-TE001E	1	-2240	5.5	C.9	TEMP ELEMENT	107E6059	190
468	T53-TE001F	2	-2240	5.5	C.9	TEMP ELEMENT	107E6059	190
469	T53-TE001J	1	-4920	5.5	C.9	TEMP ELEMENT	107E6059	190
470	T53-TE001K	2	-4920	5.5	C.9	TEMP ELEMENT	107E6059	190
471	T53-TE001N	1	-6590	5.5	C.9	TEMP ELEMENT	107E6059	190
472	T53-TE001P	2	-6590	5.5	C.9	TEMP ELEMENT	107E6059	190
473	T53-TE002E	1	-2240	4.5	D.8	TEMP ELEMENT	107E6059	190
474	T53-TE002F	2	-2240	4.5	D.8	TEMP ELEMENT	107E6059	190
475	T53-TE002J	1	-4920	4.5	D.8	TEMP ELEMENT	107E6059	190

Table 9A.6-2 Fire Hazard Analysis Equipment Database Sorted by Room — Reactor Building (Continued)

Item No.	MPL No	Elect Div.	Elev. Location	Location Number Coord.	Location Alpha Coord.	Description	System Drawing	Room No.
476	T53-TE002K	2	-4920	4.5	D.8	TEMP ELEMENT	107E6059	190
477	T53-TE002N	1	-6590	4.5	D.8	TEMP ELEMENT	107E6059	190
478	T53-TE002P	2	-6590	4.5	D.8	TEMP ELEMENT	107E6059	190
479	T53-TE003E	1	-2240	3.2	E.4	TEMP ELEMENT	107E6059	190
480	T53-TE003F	2	-2240	3.2	E.4	TEMP ELEMENT	107E6059	190
481	T53-TE003J	1	-4920	3.2	E.4	TEMP ELEMENT	107E6059	190
482	T53-TE003K	2	-4920	3.2	E.4	TEMP ELEMENT	107E6059	190
483	T53-TE003N	1	-6590	3.2	E.4	TEMP ELEMENT	107E6059	190
484	T53-TE003P	2	-6590	3.2	E.4	TEMP ELEMENT	107E6059	190
485	T53-TE004E	1	-2240	3.0	D.1	TEMP ELEMENT	107E6059	190
486	T53-TE004F	2	-2240	3.0	D.1	TEMP ELEMENT	107E6059	190
487	T53-TE004J	1	-4920	3.0	D.1	TEMP ELEMENT	107E6059	190
488	T53-TE004K	2	-4920	3.0	D.1	TEMP ELEMENT	107E6059	190
489	T53-TE004N	1	-6590	3.0	D.1	TEMP ELEMENT	107E6059	190
490	T53-TE004P	2	-6590	3.0	D.1	TEMP ELEMENT	107E6059	190
491	T53-TE005E	1	-2240	3.0	B.7	TEMP ELEMENT	107E6059	190
492	T53-TE005F	2	-2240	3.0	B.7	TEMP ELEMENT	107E6059	190
493	T53-TE005J	1	-4920	3.0	B.7	TEMP ELEMENT	107E6059	190
494	T53-TE005K	2	-4920	3.0	B.7	TEMP ELEMENT	107E6059	190
495	T53-TE005N	1	-6590	3.0	B.7	TEMP ELEMENT	107E6059	190
496	T53-TE005P	2	-6590	3.0	B.7	TEMP ELEMENT	107E6059	190
497	T53-TE006E	1	-2240	4.4	C.1	TEMP ELEMENT	107E6059	190
498	T53-TE006F	2	-2240	4.4	C.1	TEMP ELEMENT	107E6059	190
499	T53-TE006J	1	-4920	4.4	C.1	TEMP ELEMENT	107E6059	190
500	T53-TE006K	2	-4920	4.4	C.1	TEMP ELEMENT	107E6059	190
501	T53-TE006N	1	-6590	4.4	C.1	TEMP ELEMENT	107E6059	190
502	T53-TE006P	2	-6590	4.4	C.1	TEMP ELEMENT	107E6059	190
503	K17-C001A	N	-6600	3.7	C.6	LCW PUMP - DW SUMP	103E1634/0	191
504	K17-C001B	N	-6600	3.7	C.6	LCW PUMP - DW SUMP	103E1634/0	191
505	K17-C101A	N	-6600	4.3	C.6	HCW PUMP - DW SUMP	103E1634/0	191
506	K17-C101B	N	-6600	4.3	C.6	HCW PUMP - DW SUMP	103E1634/0	191
507	K17-LE103	N	-6600	4.3	C.6	LEVEL ELEMENT	103E1634/0	191
508	K17-LS002	N	-6600	3.7	C.6	LEVEL SWITCH	103E1634/0	191
509	K17-LS003	N	-6600	3.7	C.6	LEVEL SWITCH	103E1634/0	191

Table 9A.6-2 Fire Hazard Analysis Equipment Database Sorted by Room — Reactor Building (Continued)

Item No.	MPL No	Elect Div.	Elev. Location	Location Number Coord.	Location Alpha Coord.	Description	System Drawing	Room No.
510	K17-LS101	N	-6600	4.3	C.6	LEVEL SWITCH	103E1634/0	191
511	K17-LS102	N	-6600	4.3	C.6	LEVEL SWITCH	103E1634/0	191
512	K17-LT103	N	-6600	4.3	C.6	LEVEL TRANSMITTER	103E1634/0	191
513	K17-TE001	N	-6600	3.7	C.6	TEMP ELEMENT	103E1634/0	191
514	H23-P005*	N	-1700	5.8	B.0	MULTIPLEXER	----?----	210
515	H22-P055A*	23	-1700	5.2	A.3	SCRAM SOL FUSE PNL A	----?----	210
516	H22-P055D*	23	-1700	5.0	A.3	SCRAM SOL FUSE PNL D	----?----	210
517	H22-P055E*	23	-1700	5.1	A.3	SCRAM SOL FUSE PNL E	----?----	210
518	H22-P055H*	23	-1700	4.8	A.3	SCRAM SOL FUSE PNL H	----?----	210
519	E51-PT009	1	-1700	6.2	B.9	PRESS XMTR (STM SUPP)	103E1795/1	210
520	E51-PT013A	1	-1700	6.2	B.9	PRESS XMTR (TUEB EXH)	103E1795/1	210
521	E51-PT013E	1	-1700	6.2	B.9	PRESS XMTR (TUEB EXH)	103E1795/1	210
522	E51-PT014A	1	-1700	6.2	B.9	PRESS XMTR (TUEB EXH)	103E1795/1	210
523	E51-PT014B	2	-1700	6.2	B.9	PRESS XMTR (TUEB EXH)	103E1795/1	210
524	E51-PT014E	1	-1700	6.2	B.9	PRESS XMTR (TUEB EXH)	103E1795/1	210
525	E51-PT014F	2	-1700	6.2	B.9	PRESS XMTR (TUEB EXH)	103E1795/1	210
526	H22-P010*	1	-1700	6.2	B.9	RCIC STM SYS INST RCK	10Q273-281	210
527	G41-F006	N	-1700	3.7	A.4	AO BALL VALVE	107E6042/0	210
528	G41-F007A	N	-1700	3.7	A.4	AO BALL VALVE	107E6042/0	210
529	G41-F007B	N	-1700	3.7	A.4	AO BALL VALVE	107E6042/0	210
530	G41-F010A	N	-1700	3.7	A.4	AO BALL VALVE	107E6042/0	210
531	G41-F010B	N	-1700	3.7	A.4	AO BALL VALVE	107E6042/0	210
532	G41-F048A	N	-1700	3.7	A.4	AO BALL VALVE	107E6042/0	210
533	G41-F048B	N	-1700	3.7	A.4	AO BALL VALVE	107E6042/0	210
534	G41-F049A	N	-1700	3.7	A.4	AO BALL VALVE	107E6042/0	210
535	G41-F049B	N	-1700	3.7	A.4	AO BALL VALVE	107E6042/0	210
536	G41-F051A	N	-1700	3.7	A.4	AO BALL VALVE	107E6042/0	210
537	G41-F051B	N	-1700	3.7	A.4	AO BALL VALVE	107E6042/0	210
538	G41-F052	N	-1700	3.7	A.4	AO BALL VALVE	107E6042/0	210
539	G41-F062A	N	-1700	3.7	A.4	AO BALL VALVE	107E6042/0	210
540	G41-F062B	N	-1700	3.7	A.4	AO BALL VALVE	107E6042/0	210
541	G41-F063A	N	-1700	3.7	A.4	AO GLOBE VALVE	107E6042/0	210
542	G41-F063B	N	-1700	3.7	A.4	AO GLOBE VALVE	107E6042/0	210
543	G41-F074A	N	-1700	3.7	A.4	AO BALL VALVE	107E6042/0	210

Table 9A.6-2 Fire Hazard Analysis Equipment Database Sorted by Room — Reactor Building (Continued)

Item No.	MPL No	Elect Div.	Elev. Location	Location Number Coord.	Location Alpha Coord.	Description	System Drawing	Room No.
544	G41-F074B	N	-1700	3.7	A.4	AO BALL VALVE	107E6042/0	210
545	G41-F077A	N	-1700	3.7	A.4	AO BALL VALVE	107E6042/0	210
546	G41-F077B	N	-1700	3.7	A.4	AO BALL VALVE	107E6042/0	210
547	G41-F078	N	-1700	3.7	A.4	AO BALL VALVE	107E6042/0	210
548	G41-F084A	N	-1700	3.7	A.4	AO GLOBE VALVE	107E6042/0	210
549	G41-F084B	N	-1700	3.7	A.4	AO GLOBE VALVE	107E6042/0	210
550	G41-F087A	N	-1700	3.7	A.4	AO GLOBE VALVE	107E6042/0	210
551	G41-F087B	N	-1700	3.7	A.4	AO GLOBE VALVE	107E6042/0	210
552	G41-F101A	N	-1700	3.7	A.4	AO BALL VALVE	107E6042/0	210
553	G41-F101B	N	-1700	3.7	A.4	AO BALL VALVE	107E6042/0	210
554	H22-P011*	N	-1700	3.7	A.5	FPC F/D SO VLV RACK	10Q273-281	210
555	X-013A	1	1400	4.0	B.1	RIP PURGE WTR SUPPLY	795E882/4	211
556	X-020A	N	1400	4.0	B.2	CRD INSERT	796E367/3	211
557	X-400A	N	1400	4.0	B.1	TIP DRIVE	795E898	211
558	X-400B	N	1400	4.0	B.1	TIP DRIVE	795E898	211
559	X-400C	N	1400	4.0	B.1	TIP DRIVE	795E898	211
560	X-401	N	1400	4.0	B.1	TIP DRIVE PURGE LINE	795E898	211
561	E11-F008A	1	1200	5.9	C.8	MO GLOBE VALVE (PRET)	103E1797/1	212
562	E11-F021A	1	1200	5.9	C.8	MO GATE VALVE (RECIRC)	103E1797/1	212
563	E11-F031A	1	-1700	5.9	C.6	MO GLOBE VALVE (TEST)	103E1797/1	212
564	E11-POT304A	1	-1700	5.9	C.6	POS XMTR (FO31A)	103E1797/1	212
565	E51-F047	1	1200	5.9	C.6	MO GATE VALVE (VPDISC)	103E1795/1	212
566	T31-F739A	1	2800	5.9	C.4	SO VALVE	107E6043/0	212
567	T31-F741A	1	-1700	5.9	C.4	SO VALVE	107E6043/0	212
568	T31-F743A	1	2800	5.9	C.4	SO VALVE	107E6043/0	212
569	T31-F745A	1	-1700	5.9	C.4	SO VALVE	107E6043/0	212
570	X-204	1	1200	5.9	C.6	RHR PUMP A TEST RET	795E880/3	212
571	X-322A	1	400	5.8	C.5	SUPP CHAMBER WATER LEV	107E6043/0	212
572	X-322C	1	400	5.8	C.6	SUPP CHAMBER WATER LEV	107E6043/0	212
573	G51-F007	N	1650	3.2	B.2	MO GATE VALVE (PRET)	107E6051/0	214
574	X-217	N	1650	3.2	B.2	SPCU PUMP RETURN	107E6051/0	214
575	C51-J001A	N	1500	4.2	A.2	ATIP DRIVE A	107E5074/0	215
576	C51-J001B	N	1500	4.0	A.2	ATIP DRIVE B	107E5074/0	215

Table 9A.6-2 Fire Hazard Analysis Equipment Database Sorted by Room — Reactor Building (Continued)

Item No.	MPL No	Elect Div.	Elev. Location	Location Number Coord.	Location Alpha Coord.	Description	System Drawing	Room No.
577	C51-J001C	N	1500	3.8	A.2	ATIP DRIVE C	107E5074/0	215
578	C51-J009	N	1500	4.5	A.2	TIP PURGE EQUIPMENT	107E5074/0	215
579	C51-J011	N	1500	4.5	A.2	TIP PURGE VALVE	107E5074/0	215
580	C51-N006A	N	1500	3.8	A.2	TIP IN-CORE PROBE	107E5074/0	215
581	C51-N006B	N	1500	4.0	A.2	TIP IN-CORE PROBE	107E5074/0	215
582	C51-N006C	N	1500	4.2	A.2	TIP IN-CORE PROBE	107E5074/0	215
583	D21-RE018	N	1500	4.0	A.2	AREA RAD DETECTOR	299X701-171/0	215
584	C51-N005A	N	1500	4.0	A.8	OB PROXIMITY SWITCH	107E5074/0	216
585	C51-N005B	N	1500	4.0	A.8	OB PROXIMITY SWITCH	107E5074/0	216
586	C51-N005C	N	1500	4.0	A.8	OB PROXIMITY SWITCH	107E5074/0	216
587	D21-RE019	N	1500	4.0	A.5	AREA RAD DETECTOR	299X701-171/0	216
588	C51-J004A	N	1500	4.0	B.1	TIP BALL/SHR VLV ASM	107E5074/0	216
589	C51-J004B	N	1500	4.0	B.1	TIP BALL/SHR VLV ASM	107E5074/0	216
590	C51-J004C	N	1500	4.0	B.1	TIP BALL/SHR VLV ASM	107E5074/0	216
591	D21-RE023	N	-1700	5.0	B.1	AREA RAD DETECTOR	299X701-171/0	219
592	D21-RE022	N	-1700	2.0	E.9	AREA RAD DETECTOR	299X701-171/0	221
593	H23-P006*	N	-1700	2.6	F.0	MULTIPLEXER	----?----	221
594	H23-P007*	N	-1700	2.8	F.0	MULTIPLEXER	----?----	221
595	T49-F006B	2	800	2.8	E.5	MO GATE VALVE	107E6047/0	221
596	T49-F007B	2	800	2.8	E.5	AO GATE VALVE	107E6047/0	221
597	T49-F007B-1	1	800	2.8	E.5	SOLENOID VALVE	107E6047/0	221
598	T49-F007B-2	4	800	2.8	E.5	SOLENOID VALVE	107E6047/0	221
599	X-242	2	800	2.7	E.5	FCS RETURN	NT-1006643	221
600	E11-F008B	2	1200	2.1	D.2	MO GLOBE VALVE (PRET)	103E1797/1	222
601	E11-F021B	2	1200	2.1	D.2	MO GATE VALVE (RECIRC)	103E1797/1	222
602	E11-F031B	2	-1700	2.1	D.4	MO GLOBE VALVE (TEST)	103E1797/1	222
603	E11-POT304B	2	-1700	2.1	D.4	POS XMTR (FO31B)	103E1797/1	222
604	T31-F739B	2	2800	2.1	D.5	SO VALVE	107E6043/0	222
605	T31-F741B	2	-1700	2.1	D.5	SO VALVE	107E6043/0	222
606	T31-F743B	2	2800	2.1	D.5	SO VALVE	107E6043/0	222
607	T31-F745B	2	-1700	2.1	D.5	SO VALVE	107E6043/0	222
608	X-205	2	1200	2.1	D.4	RHR PUMP B TEST RET	795E880/3	222
609	X-322E	3	400	2.2	D.6	SUPP CHAMBER WATER LEV	107E6043/0	222
610	D21-RE010	N	-1700	3.8	F.1	AREA RAD DETECTOR	299X701-171/0	223

Table 9A.6-2 Fire Hazard Analysis Equipment Database Sorted by Room — Reactor Building (Continued)

Item No.	MPL No	Elect Div.	Elev. Location	Location Number Coord.	Location Alpha Coord.	Description	System Drawing	Room No.
611	T31-TE053A	N	-1700	4.2	E.8	TEMP ELEMENT	107E6043/0	223
612	T31-TE053B	N	-1700	4.2	E.9	TEMP ELEMENT	107E6043/0	223
613	T31-TE053C	N	-1700	3.8	E.8	TEMP ELEMENT	107E6043/0	223
614	T31-TE053D	N	-1700	3.8	E.9	TEMP ELEMENT	107E6043/0	223
615	X-013B	2	1400	4.0	E.9	RIP PURGE WTR SUPPLY	795E882/4	223
616	X-020B	N	1400	4.0	E.9	CRD INSERT	796E367/3	223
617	D21-RE021	N	-1700	4.0	F.8	AREA RAD DETECTOR	299X701-171/0	225
618	T31-TE053F	N	-1700	3.7	F.5	TEMP ELEMENT	107E6043/0	225
619	T31-TE053H	N	-1700	3.7	F.3	TEMP ELEMENT	107E6043/0	225
620	B31-FIS001A	N	-1700	3.4	F.2	FLOW IND SWITCH	107E5194/0	225
621	B31-FIS001B	N	-1700	3.4	F.2	FLOW IND SWITCH	107E5194/0	225
622	B31-FIS001C	N	-1700	3.4	F.2	FLOW IND SWITCH	107E5194/0	225
623	B31-FIS001D	N	-1700	3.4	F.2	FLOW IND SWITCH	107E5194/0	225
624	B31-FIS001E	N	-1700	3.4	F.2	FLOW IND SWITCH	107E5194/0	225
625	B31-FIS001F	N	-1700	3.4	F.2	FLOW IND SWITCH	107E5194/0	225
626	B31-FIS001G	N	-1700	3.4	F.2	FLOW IND SWITCH	107E5194/0	225
627	B31-FIS001H	N	-1700	3.4	F.2	FLOW IND SWITCH	107E5194/0	225
628	B31-FIS001J	N	-1700	3.4	F.2	FLOW IND SWITCH	107E5194/0	225
629	B31-FIS001K	N	-1700	3.4	F.2	FLOW IND SWITCH	107E5194/0	225
630	B31-TI001A	N	-1700	3.4	F.2	TEMP INDICATOR	107E5194/0	225
631	B31-TI001B	N	-1700	3.4	F.2	TEMP INDICATOR	107E5194/0	225
632	U41-D131B	N	-1700	3.5	F.4	RIP/FMCRD CP RM FCU B	107E5189/0	225
633	E11-F008C	3	1200	5.9	D.2	MO GLOBE VALVE (PRET)	103E1797/1	230
634	E11-F021C	3	1200	5.9	D.2	MO GATE VALVE (RECIRC)	103E1797/1	230
635	E11-F031C	3	-1700	5.9	D.4	MO GLOBE VALVE (TEST)	103E1797/1	230
636	E11-POT304C	3	-1700	5.9	D.4	POS XMTR (FO31C)	103E1797/1	230
637	T31-F739C	3	2800	5.9	D.5	SO VALVE	107E6043/0	230
638	T31-F741C	3	-1700	5.9	D.5	SO VALVE	107E6043/0	230
639	T49-F006C	3	800	5.8	D.5	MO GATE VALVE	107E6047/0	230
640	T49-F007A-1	1	800	5.8	D.5	SOLENOID VALVE	107E6047/0	230
641	T49-F007A-2	4	800	5.8	D.5	SOLENOID VALVE	107E6047/0	230
642	T49-F007C	3	800	5.8	D.5	AO GATE VALVE	107E6047/0	230
643	X-206	3	1200	5.9	D.4	RHR PUMP C TEST RET	795E880/3	230
644	X-322D	4	400	5.8	D.6	SUPP CHAMBER WATER LEV	107E6043/0	230

Table 9A.6-2 Fire Hazard Analysis Equipment Database Sorted by Room — Reactor Building (Continued)

Item No.	MPL No	Elect Div.	Elev. Location	Location Number Coord.	Location Alpha Coord.	Description	System Drawing	Room No.
645	H22-P055C*	23	-1700	4.9	E.7	SCRAM SOL FUSE PNL C	----?----	231
646	H22-P055F*	23	-1700	4.8	E.7	SCRAM SOL FUSE PNL F	----?----	231
647	H22-P055G*	23	-1700	5.0	E.6	SCRAM SOL FUSE PNL G	----?----	231
648	H22-P055B*	23	-1700	4.6	E.8	SCRAM SOL FUSE PNL B	----?----	231
649	P11-FQT102	N	-1700	4.5	F.5	FLOW XMTR (MUWP)	107E111/1	233
650	T31-TE053E	N	-1700	4.5	F.3	TEMP ELEMENT	107E6043/0	233
651	T31-TE053G	N	-1700	4.5	F.5	TEMP ELEMENT	107E6043/0	233
652	U41-D131A	N	-1700	6.3	F.1	RIP/FMCRD CP RM FCU A	107E5189/0	233
653	E31-TE009A	1	-1700	1.6	C.0	CUW R/HX AMB TEMP ELEM	103E1792/1	241
654	E31-TE009B	2	-1700	1.6	C.0	CUW R/HX AMB TEMP ELEM	103E1792/1	241
655	E31-TE009C	3	-1700	1.6	C.0	CUW R/HX AMB TEMP ELEM	103E1792/1	241
656	E31-TE009D	4	-1700	1.6	C.0	CUW R/HX AMB TEMP ELEM	103E1792/1	241
657	E31-TE033A	N	-1700	1.6	C.0	CUW R/HX DIFF TEMP ELEM	103E1792/1	241
658	E31-TE034A	N	-1700	1.6	C.0	CUW R/HX DIFF TEMP ELEM	103E1792/1	241
659	G31-B001A	N	-1700	1.6	C.0	REGEN. HT. EXCHANGER	107E5051/0	241
660	G31-B001B	N	-1700	1.6	C.0	REGEN. HT. EXCHANGER	107E5051/0	241
661	G31-B001C	N	-1700	1.6	C.0	REGEN. HT. EXCHANGER	107E5051/0	241
662	G31-F011	N	-1700	1.6	C.0	MO GLOBE VALVE	107E5051/0	241
663	G31-TE002	N	-1700	1.6	C.4	TEMP ELEMENT	107E5051/0	241
664	G31-TE004	N	-1700	1.6	C.4	TEMP ELEMENT	107E5051/0	241
665	G31-TE015	N	-1700	1.7	C.0	TEMP ELEMENT	107E5051/0	241
666	T31-F741D	4	-1700	2.2	C.1	SO VALVE	107E6043/0	241
667	T31-F739D	4	2800	2.2	C.1	SO VALVE	107E6043/0	241
668	G31-F030B	N	-1700	1.6	B.2	AO VALVE	107E5051/0	243
669	G31-F030A	N	-1700	2.5	B.2	AO VALVE	107E5051/0	243
670	G31-E/P020	N	-1700	1.9	A.3	E/P TRANSDUCER	107E5051/0	244
671	G31-F201A	N	-1700	1.9	A.4	AO BALL VALVE	107E5051/0	244
672	G31-F201B	N	-1700	1.9	A.4	AO BALL VALVE	107E5051/0	244
673	G31-F202A	N	-1700	1.9	A.4	AO BALL VALVE	107E5051/0	244
674	G31-F202B	N	-1700	1.9	A.4	AO BALL VALVE	107E5051/0	244

Table 9A.6-2 Fire Hazard Analysis Equipment Database Sorted by Room — Reactor Building (Continued)

Item No.	MPL No	Elect Div.	Elev. Location	Location Number Coord.	Location Alpha Coord.	Description	System Drawing	Room No.
675	G31-F204A	N	-1700	1.9	A.4	AO BALL VALVE	107E5051/0	244
676	G31-F204A*	N	-1700	1.9	A.4	AO BALL VALVE	107E5051/0	244
677	G31-F204B	N	-1700	1.9	A.4	AO BALL VALVE	107E5051/0	244
678	G31-F204B*	N	-1700	1.9	A.4	AO BALL VALVE	107E5051/0	244
679	G31-F205A	N	-1700	1.9	A.4	AO BALL VALVE	107E5051/0	244
680	G31-F205B	N	-1700	1.9	A.4	AO BALL VALVE	107E5051/0	244
681	G31-F208A	N	-1700	1.9	A.4	AO BALL VALVE	107E5051/0	244
682	G31-F208B	N	-1700	1.9	A.4	AO BALL VALVE	107E5051/0	244
683	G31-F209A	N	-1700	1.9	A.4	AO BALL VALVE	107E5051/0	244
684	G31-F209B	N	-1700	1.9	A.4	AO BALL VALVE	107E5051/0	244
685	G31-F210A	N	-1700	1.9	A.4	AO BALL VALVE	107E5051/0	244
686	G31-F210B	N	-1700	1.9	A.4	AO BALL VALVE	107E5051/0	244
687	G31-F211A	N	-1700	1.9	A.4	AO BALL VALVE	107E5051/0	244
688	G31-F211B	N	-1700	1.9	A.4	AO BALL VALVE	107E5051/0	244
689	G31-F217A	N	-1700	1.9	A.4	AO BALL VALVE	107E5051/0	244
690	G31-F217B	N	-1700	1.9	A.4	AO BALL VALVE	107E5051/0	244
691	G31-F218A	N	-1700	1.9	A.4	AO BALL VALVE	107E5051/0	244
692	G31-F218B	N	-1700	1.9	A.4	AO BALL VALVE	107E5051/0	244
693	G31-F236A	N	-1700	1.9	A.4	AO BALL VALVE	107E5051/0	244
694	G31-F236B	N	-1700	1.9	A.4	AO BALL VALVE	107E5051/0	244
695	G31-F244A	N	-1700	1.9	A.4	AO BALL VALVE	107E5051/0	244
696	G31-F244B	N	-1700	1.9	A.4	AO BALL VALVE	107E5051/0	244
697	G31-F245A	N	-1700	1.9	A.4	AO BALL VALVE	107E5051/0	244
698	G31-F245B	N	-1700	1.9	A.4	AO BALL VALVE	107E5051/0	244
699	G31-F248A	N	-1700	1.9	A.4	AO BALL VALVE	107E5051/0	244
700	G31-F248B	N	-1700	1.9	A.4	AO BALL VALVE	107E5051/0	244
701	G31-F250A	N	-1700	1.9	A.4	AO GLOBE VALVE	107E5051/0	244
702	G31-F250B	N	-1700	1.9	A.4	AO GLOBE VALVE	107E5051/0	244
703	G31-F251A	N	-1700	1.9	A.4	AO GLOBE VALVE	107E5051/0	244
704	G31-F251B	N	-1700	1.9	A.4	AO GLOBE VALVE	107E5051/0	244
705	G31-F256A	N	-1700	1.9	A.4	AO GLOBE VALVE	107E5051/0	244
706	G31-F256B	N	-1700	1.9	A.4	AO GLOBE VALVE	107E5051/0	244
707	G31-F263A	N	-1700	1.9	A.4	AO BALL VALVE	107E5051/0	244
708	G31-F263B	N	-1700	1.9	A.4	AO BALL VALVE	107E5051/0	244

Table 9A.6-2 Fire Hazard Analysis Equipment Database Sorted by Room — Reactor Building (Continued)

Item No.	MPL No	Elect Div.	Elev. Location	Location Number Coord.	Location Alpha Coord.	Description	System Drawing	Room No.
709	G31-F264A	N	-1700	1.9	A.4	AO BALL VALVE	107E5051/0	244
710	G31-F264B	N	-1700	1.9	A.4	AO BALL VALVE	107E5051/0	244
711	G31-F267A	N	-1700	1.9	A.4	AO GLOBE VALVE	107E5051/0	244
712	G31-F267B	N	-1700	1.9	A.4	AO GLOBE VALVE	107E5051/0	244
713	G31-F268A	N	-1700	1.9	A.4	AO GLOBE VALVE	107E5051/0	244
714	G31-F268B	N	-1700	1.9	A.4	AO GLOBE VALVE	107E5051/0	244
715	H22-P012A*	N	-1700	1.9	A.4	CUW/FD SO VLV RACK A	10Q273-281	244
716	H22-P012B*	N	-1700	1.9	A.4	CUW/FD SO VLV RACK B	10Q273-281	244
717	X-322B	2	400	2.2	C.5	SUPP CHAMBER WATER LEV	107E6043/0	244
718	X-322F	2	400	2.2	C.6	SUPP CHAMBER WATER LEV	107E6043/0	244
719	G41-C003B	N	-1700	2.4	A.7	FPC HOLDING PUMP B	107E6042/0	248
720	G41-C003A	N	-1700	2.8	A.7	FPC HOLDING PUMP A	107E6042/0	248
721	C51-J002A	N	1500	3.9	B.8	TIP INDEXER A	107E5074/0	290
722	C51-J002B	N	1500	3.9	B.8	TIP INDEXER B	107E5074/0	290
723	C51-J002C	N	1500	4.1	B.8	TIP INDEXER C	107E5074/0	290
724	C51-N004A	N	1500	4.0	B.5	IB PROXIMITY SWITCH	107E5074/0	290
725	C51-N004B	N	1500	4.0	B.5	IB PROXIMITY SWITCH	107E5074/0	290
726	C51-N004C	N	1500	4.0	B.5	IB PROXIMITY SWITCH	107E5074/0	290
727	T53-TE001A	1	-1500	5.5	C.9	TEMP ELEMENT	107E6059	290
728	T53-TE001B	2	-1500	5.5	C.9	TEMP ELEMENT	107E6059	290
729	T53-TE002A	1	-1500	4.5	D.8	TEMP ELEMENT	107E6059	290
730	T53-TE002B	2	-1500	4.5	D.8	TEMP ELEMENT	107E6059	290
731	T53-TE003A	1	-1500	3.2	E.4	TEMP ELEMENT	107E6059	290
732	T53-TE003B	2	-1500	3.2	E.4	TEMP ELEMENT	107E6059	290
733	T53-TE004A	1	-1500	3.0	D.1	TEMP ELEMENT	107E6059	290
734	T53-TE004B	2	-1500	3.0	D.1	TEMP ELEMENT	107E6059	290
735	T53-TE005A	1	-1500	3.0	B.7	TEMP ELEMENT	107E6059	290
736	T53-TE006A	1	-1500	4.4	C.1	TEMP ELEMENT	107E6059	290
737	T53-TE006B	2	-1500	4.4	C.1	TEMP ELEMENT	107E6059	290
738	B31-B001A	N	4000	4.1	C.7	RIP HEAT EXCHANGER A	107E5194/0	291
739	B31-B001B	N	4000	4.3	C.8	RIP HEAT EXCHANGER B	107E5194/0	291
740	B31-B001C	N	4000	4.4	D.0	RIP HEAT EXCHANGER C	107E5194/0	291
741	B31-B001D	N	4000	4.3	D.2	RIP HEAT EXCHANGER D	107E5194/0	291

Table 9A.6-2 Fire Hazard Analysis Equipment Database Sorted by Room — Reactor Building (Continued)

Item No.	MPL No	Elect Div.	Elev. Location	Location Number Coord.	Location Alpha Coord.	Description	System Drawing	Room No.
742	B31-B001E	N	4000	4.1	D.4	RIP HEAT EXCHANGER E	107E5194/0	291
743	B31-B001F	N	4000	3.9	D.4	RIP HEAT EXCHANGER F	107E5194/0	291
744	B31-B001G	N	4000	3.7	D.2	RIP HEAT EXCHANGER G	107E5194/0	291
745	B31-B001H	N	4000	3.6	D.0	RIP HEAT EXCHANGER H	107E5194/0	291
746	B31-B001J	N	4000	3.7	C.8	RIP HEAT EXCHANGER J	107E5194/0	291
747	B31-B001K	N	4000	3.9	C.6	RIP HEAT EXCHANGER K	107E5194/0	291
748	B31-C001A	N	4000	4.1	C.7	RIP PUMP A	107E5194/0	291
749	B31-C001B	N	4000	4.3	C.8	RIP PUMP B	107E5194/0	291
750	B31-C001C	N	4000	4.4	D.0	RIP PUMP C	107E5194/0	291
751	B31-C001D	N	4000	4.3	D.2	RIP PUMP D	107E5194/0	291
752	B31-C001E	N	4000	4.1	D.4	RIP PUMP E	107E5194/0	291
753	B31-C001F	N	4000	3.9	D.4	RIP PUMP F	107E5194/0	291
754	B31-C001G	N	4000	3.7	D.2	RIP PUMP G	107E5194/0	291
755	B31-C001H	N	4000	3.6	D.0	RIP PUMP H	107E5194/0	291
756	B31-C001J	N	4000	3.7	C.8	RIP PUMP J	107E5194/0	291
757	B31-C001K	N	4000	3.9	C.6	RIP PUMP K	107E5194/0	291
758	B31-SE100A*	N	4000	4.1	C.7	SPEED ELEMENT	107E5194/0	291
759	B31-SE100B*	N	4000	4.3	C.8	SPEED ELEMENT	107E5194/0	291
760	B31-SE100C*	N	4000	4.4	D.0	SPEED ELEMENT	107E5194/0	291
761	B31-SE100D*	N	4000	4.3	D.2	SPEED ELEMENT	107E5194/0	291
762	B31-SE100E*	N	4000	4.1	D.4	SPEED ELEMENT	107E5194/0	291
763	B31-SE100F*	N	4000	3.9	D.4	SPEED ELEMENT	107E5194/0	291
764	B31-SE100G*	N	4000	3.7	D.2	SPEED ELEMENT	107E5194/0	291
765	B31-SE100H*	N	4000	3.6	D.0	SPEED ELEMENT	107E5194/0	291
766	B31-SE100J*	N	4000	3.7	C.8	SPEED ELEMENT	107E5194/0	291
767	B31-SE100K*	N	4000	3.9	C.6	SPEED ELEMENT	107E5194/0	291
768	B31-SE101A*	N	4000	4.1	C.7	SPEED ELEMENT	107E5194/0	291
769	B31-SE101B*	N	4000	4.3	C.8	SPEED ELEMENT	107E5194/0	291
770	B31-SE101C*	N	4000	4.4	D.0	SPEED ELEMENT	107E5194/0	291
771	B31-SE101D*	N	4000	4.3	D.2	SPEED ELEMENT	107E5194/0	291
772	B31-SE101E*	N	4000	4.1	D.4	SPEED ELEMENT	107E5194/0	291
773	B31-SE101F*	N	4000	3.9	D.4	SPEED ELEMENT	107E5194/0	291
774	B31-SE101G*	N	4000	3.7	D.2	SPEED ELEMENT	107E5194/0	291
775	B31-SE101H*	N	4000	3.6	D.0	SPEED ELEMENT	107E5194/0	291

Table 9A.6-2 Fire Hazard Analysis Equipment Database Sorted by Room — Reactor Building (Continued)

Item No.	MPL No	Elect Div.	Elev. Location	Location Number Coord.	Location Alpha Coord.	Description	System Drawing	Room No.
776	B31-SE101J*	N	4000	3.7	C.8	SPEED ELEMENT	107E5194/0	291
777	B31-SE101K*	N	4000	3.9	C.6	SPEED ELEMENT	107E5194/0	291
778	B31-TE301A	N	4000	4.1	C.7	TEMP ELEMENT	107E5194/0	291
779	B31-TE301B	N	4000	4.3	C.8	TEMP ELEMENT	107E5194/0	291
780	B31-TE301C	N	4000	4.4	D.0	TEMP ELEMENT	107E5194/0	291
781	B31-TE301D	N	4000	4.3	D.2	TEMP ELEMENT	107E5194/0	291
782	B31-TE301E	N	4000	4.1	D.4	TEMP ELEMENT	107E5194/0	291
783	B31-TE301F	N	4000	3.9	D.4	TEMP ELEMENT	107E5194/0	291
784	B31-TE301G	N	4000	3.7	D.2	TEMP ELEMENT	107E5194/0	291
785	B31-TE301H	N	4000	3.6	D.0	TEMP ELEMENT	107E5194/0	291
786	B31-TE301J	N	4000	3.7	C.8	TEMP ELEMENT	107E5194/0	291
787	B31-TE301K	N	4000	3.9	C.6	TEMP ELEMENT	107E5194/0	291
788	B31-TE302A	N	4000	4.1	C.7	TEMP ELEMENT	107E5194/0	291
789	B31-TE302B	N	4000	4.3	C.8	TEMP ELEMENT	107E5194/0	291
790	B31-TE302C	N	4000	4.4	D.0	TEMP ELEMENT	107E5194/0	291
791	B31-TE302D	N	4000	4.3	D.2	TEMP ELEMENT	107E5194/0	291
792	B31-TE302E	N	4000	4.1	D.4	TEMP ELEMENT	107E5194/0	291
793	B31-TE302F	N	4000	3.9	D.4	TEMP ELEMENT	107E5194/0	291
794	B31-TE302G	N	4000	3.7	D.3	TEMP ELEMENT	107E5194/0	291
795	B31-TE302H	N	4000	3.6	D.0	TEMP ELEMENT	107E5194/0	291
796	B31-TE302J	N	4000	3.7	C.8	TEMP ELEMENT	107E5194/0	291
797	B31-TE302K	N	4000	3.9	C.6	TEMP ELEMENT	107E5194/0	291
798	B31-VBE100A*	N	4000	4.1	C.7	VIBRATION ELEMENT	107E5194/0	291
799	B31-VBE100B*	N	4000	4.3	C.8	VIBRATION ELEMENT	107E5194/0	291
800	B31-VBE100C*	N	4000	4.4	D.0	VIBRATION ELEMENT	107E5194/0	291
801	B31-VBE100D*	N	4000	4.3	D.2	VIBRATION ELEMENT	107E5194/0	291
802	B31-VBE100E*	N	4000	4.1	D.4	VIBRATION ELEMENT	107E5194/0	291
803	B31-VBE100F*	N	4000	3.9	D.4	VIBRATION ELEMENT	107E5194/0	291
804	B31-VBE100G*	N	4000	3.7	D.2	VIBRATION ELEMENT	107E5194/0	291
805	B31-VBE100H*	N	4000	3.6	D.0	VIBRATION ELEMENT	107E5194/0	291
806	B31-VBE100J*	N	4000	3.7	C.8	VIBRATION ELEMENT	107E5194/0	291
807	B31-VBE100K*	N	4000	3.9	C.6	VIBRATION ELEMENT	107E5194/0	291
808	B31-VBE101A*	N	4000	4.1	C.7	VIBRATION ELEMENT	107E5194/0	291
809	B31-VBE101B*	N	4000	4.3	C.8	VIBRATION ELEMENT	107E5194/0	291

Table 9A.6-2 Fire Hazard Analysis Equipment Database Sorted by Room — Reactor Building

Item No.	MPL No	Elect Div.	Elev. Location	Location Number Coord.	Location Alpha Coord.	Description	System Drawing	Room No.
810	B31-VBE101C*	N	4000	4.4	D.0	VIBRATION ELEMENT	107E5194/0	291
811	B31-VBE101D*	N	4000	4.3	D.2	VIBRATION ELEMENT	107E5194/0	291
812	B31-VBE101E*	N	4000	4.1	D.4	VIBRATION ELEMENT	107E5194/0	291
813	B31-VBE101F*	N	4000	3.9	D.4	VIBRATION ELEMENT	107E5194/0	291
814	B31-VBE101G*	N	4000	3.7	D.2	VIBRATION ELEMENT	107E5194/0	291
815	B31-VBE101H*	N	4000	3.6	D.0	VIBRATION ELEMENT	107E5194/0	291
816	B31-VBE101J*	N	4000	3.7	C.8	VIBRATION ELEMENT	107E5194/0	291
817	B31-VBE101K*	N	4000	3.9	C.6	VIBRATION ELEMENT	107E5194/0	291
818	C12-D005001	N1	-1100	4.3	C.7	FMCRD 34-63 A QUAD	103E1789/0	291
819	C12-D005002	N3	-1100	4.3	C.7	FMCRD 54-59 A QUAD	103E1789/0	291
820	C12-D005003	N2	-1100	4.3	D.3	FMCRD 38-19 C QUAD	103E1789/0	291
821	C12-D005004	N1	-1100	4.3	C.7	FMCRD 50-59 A QUAD	103E1789/0	291
822	C12-D005005	N3	-1100	4.3	C.7	FMCRD 38-35 A QUAD	103E1789/0	291
823	C12-D005006	N2	-1100	4.3	D.3	FMCRD 54-35 C QUAD	103E1789/0	291
824	C12-D005007	N2	-1100	4.3	D.3	FMCRD 34-23 C QUAD	103E1789/0	291
825	C12-D005008	N3	-1100	4.3	C.7	FMCRD 50-55 A QUAD	103E1789/0	291
826	C12-D005009	N1	-1100	4.3	C.7	FMCRD 62-47 A QUAD	103E1789/0	291
827	C12-D005010	N1	-1100	4.3	D.3	FMCRD 38-31 C QUAD	103E1789/0	291
828	C12-D005011	N3	-1100	4.3	D.3	FMCRD 58-35 C QUAD	103E1789/0	291
829	C12-D005012	N3	-1100	4.3	C.7	FMCRD 58-47 A QUAD	103E1789/0	291
830	C12-D005013	N1	-1100	4.3	D.3	FMCRD 42-27 C QUAD	103E1789/0	291
831	C12-D005014	N2	-1100	4.3	C.7	FMCRD 54-47 A QUAD	103E1789/0	291
832	C12-D005015	N2	-1100	4.3	C.7	FMCRD 46-63 A QUAD	103E1789/0	291
833	C12-D005016	N2	-1100	4.3	C.7	FMCRD 50-51 A QUAD	103E1789/0	291
834	C12-D005017	N3	-1100	4.3	C.7	FMCRD 46-59 A QUAD	103E1789/0	291
835	C12-D005018	N2	-1100	4.3	D.3	FMCRD 42-23 C QUAD	103E1789/0	291
836	C12-D005019	N2	-1100	4.3	D.3	FMCRD 38-27 C QUAD	103E1789/0	291
837	C12-D005020	N3	-1100	4.3	C.7	FMCRD 38-55 A QUAD	103E1789/0	291
838	C12-D005021	N3	-1100	4.3	C.7	FMCRD 34-67 A QUAD	103E1789/0	291
839	C12-D005022	N3	-1100	3.7	D.3	FMCRD 26-07 B QUAD	103E1789/0	291
840	C12-D005023	N1	-1100	4.3	D.3	FMCRD 38-03 C QUAD	103E1789/0	291
841	C12-D005024	N2	-1100	3.7	C.7	FMCRD 10-43 D QUAD	103E1789/0	291
842	C12-D005025	N1	-1100	4.3	C.7	FMCRD 42-35 A QUAD	103E1789/0	291
843	C12-D005026	N3	-1100	3.7	D.3	FMCRD 14-11 B QUAD	103E1789/0	291

Table 9A.6-2 Fire Hazard Analysis Equipment Database Sorted by Room — Reactor Building (Continued)

Item No.	MPL No	Elect Div.	Elev. Location	Location Number Coord.	Location Alpha Coord.	Description		System Drawing	Room No.
844	C12-D005027	N1	-1100	4.3	C.7	FMCRD 54-51	A QUAD	103E1789/0	291
845	C12-D005028	N3	-1100	3.7	C.7	FMCRD 34-39	D QUAD	103E1789/0	291
846	C12-D005029	N3	-1100	4.3	D.3	FMCRD 34-19	C QUAD	103E1789/0	291
847	C12-D005030	N2	-1100	3.7	D.3	FMCRD 10-19	B QUAD	103E1789/0	291
848	C12-D005031	N1	-1100	3.7	D.3	FMCRD 30-23	B QUAD	103E1789/0	291
849	C12-D005032	N3	-1100	3.7	C.7	FMCRD 22-47	D QUAD	103E1789/0	291
850	C12-D005033	N3	-1100	4.3	D.3	FMCRD 54-31	C QUAD	103E1789/0	291
851	C12-D005034	N2	-1100	3.7	C.7	FMCRD 06-47	D QUAD	103E1789/0	291
852	C12-D005035	N1	-1100	3.7	D.3	FMCRD 22-19	B QUAD	103E1789/0	291
853	C12-D005036	N1	-1100	3.7	C.7	FMCRD 34-43	D QUAD	103E1789/0	291
854	C12-D005037	N2	-1100	4.3	D.3	FMCRD 50-31	C QUAD	103E1789/0	291
855	C12-D005038	N3	-1100	4.3	D.3	FMCRD 42-19	C QUAD	103E1789/0	291
856	C12-D005039	N2	-1100	3.7	D.3	FMCRD 30-19	B QUAD	103E1789/0	291
857	C12-D005040	N1	-1100	4.3	C.7	FMCRD 38-67	A QUAD	103E1789/0	291
858	C12-D005041	N3	-1100	4.3	C.7	FMCRD 46-47	A QUAD	103E1789/0	291
859	C12-D005042	N2	-1100	4.3	C.7	FMCRD 42-59	A QUAD	103E1789/0	291
860	C12-D005043	N3	-1100	3.7	C.7	FMCRD 26-39	D QUAD	103E1789/0	291
861	C12-D005044	N2	-1100	4.3	D.3	FMCRD 42-11	C QUAD	103E1789/0	291
862	C12-D005045	N2	-1100	4.3	D.3	FMCRD 46-15	C QUAD	103E1789/0	291
863	C12-D005046	N3	-1100	4.3	D.3	FMCRD 34-31	C QUAD	103E1789/0	291
864	C12-D005047	N3	-1100	3.7	D.3	FMCRD 10-15	B QUAD	103E1789/0	291
865	C12-D005048	N2	-1100	4.3	C.7	FMCRD 46-35	A QUAD	103E1789/0	291
866	C12-D005049	N1	-1100	4.3	D.3	FMCRD 46-19	C QUAD	103E1789/0	291
867	C12-D005050	N2	-1100	4.3	D.3	FMCRD 58-27	C QUAD	103E1789/0	291
868	C12-D005051	N1	-1100	3.7	D.3	FMCRD 26-15	B QUAD	103E1789/0	291
869	C12-D005052	N3	-1100	4.3	D.3	FMCRD 54-19	C QUAD	103E1789/0	291
870	C12-D005053	N1	-1100	4.3	D.3	FMCRD 50-23	C QUAD	103E1789/0	291
871	C12-D005054	N3	-1100	4.3	D.3	FMCRD 66-35	C QUAD	103E1789/0	291
872	C12-D005055	N2	-1100	3.7	C.7	FMCRD 06-39	D QUAD	103E1789/0	291
873	C12-D005056	N1	-1100	4.3	C.7	FMCRD 66-39	A QUAD	103E1789/0	291
874	C12-D005057	N2	-1100	3.7	D.3	FMCRD 06-31	B QUAD	103E1789/0	291
875	C12-D005058	N2	-1100	4.3	C.7	FMCRD 58-51	A QUAD	103E1789/0	291
876	C12-D005059	N3	-1100	4.3	D.3	FMCRD 58-23	C QUAD	103E1789/0	291
877	C12-D005060	N1	-1100	4.3	D.3	FMCRD 34-27	C QUAD	103E1789/0	291

Table 9A.6-2 Fire Hazard Analysis Equipment Database Sorted by Room — Reactor Building (Continued)

Item No.	MPL No	Elect Div.	Elev. Location	Location Number Coord.	Location Alpha Coord.	Description	System Drawing	Room No.
878	C12-D005061	N2	-1100	3.7	D.3	FMCRD 22-27 B QUAD	103E1789/0	291
879	C12-D005062	N3	-1100	4.3	C.7	FMCRD 50-43 A QUAD	103E1789/0	291
880	C12-D005063	N2	-1100	4.3	C.7	FMCRD 38-51 A QUAD	103E1789/0	291
881	C12-D005064	N1	-1100	4.3	D.3	FMCRD 58-31 C QUAD	103E1789/0	291
882	C12-D005065	N1	-1100	3.7	D.3	FMCRD 14-27 B QUAD	103E1789/0	291
883	C12-D005066	N1	-1100	4.3	C.7	FMCRD 50-47 A QUAD	103E1789/0	291
884	C12-D005067	N1	-1100	4.3	C.7	FMCRD 38-47 A QUAD	103E1789/0	291
885	C12-D005068	N2	-1100	4.3	C.7	FMCRD 46-55 A QUAD	103E1789/0	291
886	C12-D005069	N1	-1100	3.7	D.3	FMCRD 26-27 B QUAD	103E1789/0	291
887	C12-D005070	N3	-1100	4.3	C.7	FMCRD 58-55 A QUAD	103E1789/0	291
888	C12-D005071	N1	-1100	4.3	C.7	FMCRD 58-39 A QUAD	103E1789/0	291
889	C12-D005072	N1	-1100	4.3	D.3	FMCRD 38-11 C QUAD	103E1789/0	291
890	C12-D005073	N3	-1100	4.3	D.3	FMCRD 42-31 C QUAD	103E1789/0	291
891	C12-D005074	N2	-1100	3.7	D.3	FMCRD 26-11 B QUAD	103E1789/0	291
892	C12-D005075	N3	-1100	4.3	D.3	FMCRD 50-15 C QUAD	103E1789/0	291
893	C12-D005076	N2	-1100	3.7	D.3	FMCRD 34-15 B QUAD	103E1789/0	291
894	C12-D005077	N3	-1100	4.3	C.7	FMCRD 38-43 A QUAD	103E1789/0	291
895	C12-D005078	N2	-1100	3.7	C.7	FMCRD 22-43 D QUAD	103E1789/0	291
896	C12-D005079	N2	-1100	4.3	C.7	FMCRD 58-43 A QUAD	103E1789/0	291
897	C12-D005080	N3	-1100	3.7	C.7	FMCRD 14-59 D QUAD	103E1789/0	291
898	C12-D005081	N1	-1100	4.3	D.3	FMCRD 42-15 C QUAD	103E1789/0	291
899	C12-D005082	N1	-1100	3.7	D.3	FMCRD 18-23 B QUAD	103E1789/0	291
900	C12-D005083	N1	-1100	4.3	C.7	FMCRD 42-43 A QUAD	103E1789/0	291
901	C12-D005084	N1	-1100	3.7	C.7	FMCRD 06-35 D QUAD	103E1789/0	291
902	C12-D005085	N3	-1100	4.3	C.7	FMCRD 42-51 A QUAD	103E1789/0	291
903	C12-D005086	N2	-1100	3.7	C.7	FMCRD 18-59 D QUAD	103E1789/0	291
904	C12-D005087	N3	-1100	4.3	D.3	FMCRD 42-07 C QUAD	103E1789/0	291
905	C12-D005088	N1	-1100	3.7	C.7	FMCRD 14-43 D QUAD	103E1789/0	291
906	C12-D005089	N1	-1100	3.7	C.7	FMCRD 18-35 D QUAD	103E1789/0	291
907	C12-D005090	N2	-1100	3.7	D.3	FMCRD 26-31 B QUAD	103E1789/0	291
908	C12-D005091	N1	-1100	4.3	C.7	FMCRD 46-51 A QUAD	103E1789/0	291
909	C12-D005092	N3	-1100	3.7	D.3	FMCRD 22-11 B QUAD	103E1789/0	291
910	C12-D005093	N2	-1100	3.7	C.7	FMCRD 22-55 D QUAD	103E1789/0	291
911	C12-D005094	N3	-1100	3.7	C.7	FMCRD 22-59 D QUAD	103E1789/0	291

Table 9A.6-2 Fire Hazard Analysis Equipment Database Sorted by Room — Reactor Building (Continued)

Item No.	MPL No	Elect Div.	Elev. Location	Location Number Coord.	Location Alpha Coord.	Description	System Drawing	Room No.
912	C12-D005095	N3	-1100	3.7	C.7	FMCRD 26-63 D QUAD	103E1789/0	291
913	C12-D005096	N2	-1100	3.7	D.3	FMCRD 14-23 B QUAD	103E1789/0	291
914	C12-D005097	N2	-1100	3.7	D.3	FMCRD 22-35 B QUAD	103E1789/0	291
915	C12-D005098	N3	-1100	3.7	D.3	FMCRD 30-27 B QUAD	103E1789/0	291
916	C12-D005099	N3	-1100	3.7	D.3	FMCRD 34-11 B QUAD	103E1789/0	291
917	C12-D005100	N1	-1100	3.7	C.7	FMCRD 18-47 D QUAD	103E1789/0	291
918	C12-D005101	N2	-1100	4.3	D.3	FMCRD 62-23 C QUAD	103E1789/0	291
919	C12-D005102	N1	-1100	3.7	C.7	FMCRD 10-51 D QUAD	103E1789/0	291
920	C12-D005103	N3	-1100	3.7	C.7	FMCRD 34-51 D QUAD	103E1789/0	291
921	C12-D005104	N2	-1100	3.7	C.7	FMCRD 14-47 D QUAD	103E1789/0	291
922	C12-D005105	N3	-1100	4.3	D.3	FMCRD 62-27 C QUAD	103E1789/0	291
923	C12-D005106	N1	-1100	3.7	C.7	FMCRD 26-55 D QUAD	103E1789/0	291
924	C12-D005107	N1	-1100	3.7	D.3	FMCRD 30-03 B QUAD	103E1789/0	291
925	C12-D005108	N3	-1100	3.7	C.7	FMCRD 10-47 D QUAD	103E1789/0	291
926	C12-D005109	N1	-1100	3.7	C.7	FMCRD 10-39 D QUAD	103E1789/0	291
927	C12-D005110	N1	-1100	3.7	D.3	FMCRD 26-35 B QUAD	103E1789/0	291
928	C12-D005111	N2	-1100	3.7	D.3	FMCRD 22-07 B QUAD	103E1789/0	291
929	C12-D005112	N1	-1100	4.3	C.7	FMCRD 46-39 A QUAD	103E1789/0	291
930	C12-D005113	N2	-1100	4.3	C.7	FMCRD 38-63 A QUAD	103E1789/0	291
931	C12-D005114	N3	-1100	4.3	C.7	FMCRD 34-59 A QUAD	103E1789/0	291
932	C12-D005115	N2	-1100	3.7	C.7	FMCRD 30-43 D QUAD	103E1789/0	291
933	C12-D005116	N1	-1100	4.3	D.3	FMCRD 62-35 C QUAD	103E1789/0	291
934	C12-D005117	N1	-1100	3.7	C.7	FMCRD 22-39 D QUAD	103E1789/0	291
935	C12-D005118	N3	-1100	4.3	C.7	FMCRD 42-63 A QUAD	103E1789/0	291
936	C12-D005119	N3	-1100	4.3	D.3	FMCRD 46-11 C QUAD	103E1789/0	291
937	C12-D005120	N2	-1100	4.3	D.3	FMCRD 46-27 C QUAD	103E1789/0	291
938	C12-D005121	N3	-1100	3.7	D.3	FMCRD 30-35 B QUAD	103E1789/0	291
939	C12-D005122	N2	-1100	4.3	D.3	FMCRD 38-07 C QUAD	103E1789/0	291
940	C12-D005123	N3	-1100	3.7	D.3	FMCRD 18-27 B QUAD	103E1789/0	291
941	C12-D005124	N2	-1100	4.3	C.7	FMCRD 42-47 A QUAD	103E1789/0	291
942	C12-D005125	N1	-1100	3.7	D.3	FMCRD 34-07 B QUAD	103E1789/0	291
943	C12-D005126	N2	-1100	4.3	D.3	FMCRD 62-31 C QUAD	103E1789/0	291
944	C12-D005127	N1	-1100	3.7	D.3	FMCRD 06-23 B QUAD	103E1789/0	291
945	C12-D005128	N1	-1100	4.3	D.3	FMCRD 46-31 C QUAD	103E1789/0	291

Table 9A.6-2 Fire Hazard Analysis Equipment Database Sorted by Room — Reactor Building (Continued)

Item No.	MPL No	Elect Div.	Elev. Location	Location Number Coord.	Location Alpha Coord.	Description	System Drawing	Room No.
946	C12-D005129	N1	-1100	3.7	D.3	FMCRD 10-31 B QUAD	103E1789/0	291
947	C12-D005130	N3	-1100	4.3	C.7	FMCRD 62-43 A QUAD	103E1789/0	291
948	C12-D005131	N3	-1100	3.7	C.7	FMCRD 30-55 D QUAD	103E1789/0	291
949	C12-D005132	N1	-1100	3.7	C.7	FMCRD 26-43 D QUAD	103E1789/0	291
950	C12-D005133	N2	-1100	3.7	C.7	FMCRD 14-35 D QUAD	103E1789/0	291
951	C12-D005134	N1	-1100	3.7	C.7	FMCRD 30-47 D QUAD	103E1789/0	291
952	C12-D005135	N2	-1100	3.7	D.3	FMCRD 14-15 B QUAD	103E1789/0	291
953	C12-D005136	N2	-1100	3.7	D.3	FMCRD 18-31 B QUAD	103E1789/0	291
954	C12-D005137	N2	-1100	3.7	C.7	FMCRD 30-51 D QUAD	103E1789/0	291
955	C12-D005138	N1	-1100	4.3	D.3	FMCRD 66-31 C QUAD	103E1789/0	291
956	C12-D005139	N3	-1100	3.7	D.3	FMCRD 30-15 B QUAD	103E1789/0	291
957	C12-D005140	N2	-1100	4.3	D.3	FMCRD 50-19 C QUAD	103E1789/0	291
958	C12-D005141	N3	-1100	3.7	C.7	FMCRD 02-35 D QUAD	103E1789/0	291
959	C12-D005142	N2	-1100	4.3	C.7	FMCRD 46-43 A QUAD	103E1789/0	291
960	C12-D005143	N3	-1100	3.7	D.3	FMCRD 26-19 B QUAD	103E1789/0	291
961	C12-D005144	N3	-1100	3.7	D.3	FMCRD 18-15 B QUAD	103E1789/0	291
962	C12-D005145	N3	-1100	3.7	C.7	FMCRD 06-43 D QUAD	103E1789/0	291
963	C12-D005146	N1	-1100	3.7	C.7	FMCRD 30-59 D QUAD	103E1789/0	291
964	C12-D005147	N3	-1100	3.7	C.7	FMCRD 18-43 D QUAD	103E1789/0	291
965	C12-D005148	N1	-1100	4.3	C.7	FMCRD 38-59 A QUAD	103E1789/0	291
966	C12-D005149	N2	-1100	3.7	D.3	FMCRD 22-15 B QUAD	103E1789/0	291
967	C12-D005150	N1	-1100	4.3	D.3	FMCRD 54-27 C QUAD	103E1789/0	291
968	C12-D005151	N3	-1100	3.7	C.7	FMCRD 26-51 D QUAD	103E1789/0	291
969	C12-D005152	N3	-1100	3.7	C.7	FMCRD 10-35 D QUAD	103E1789/0	291
970	C12-D005153	N2	-1100	3.7	D.3	FMCRD 30-07 B QUAD	103E1789/0	291
971	C12-D005154	N1	-1100	3.7	D.3	FMCRD 30-31 B QUAD	103E1789/0	291
972	C12-D005155	N2	-1100	3.7	C.7	FMCRD 18-51 D QUAD	103E1789/0	291
973	C12-D005156	N2	-1100	3.7	C.7	FMCRD 18-39 D QUAD	103E1789/0	291
974	C12-D005157	N2	-1100	3.7	C.7	FMCRD 14-55 D QUAD	103E1789/0	291
975	C12-D005158	N1	-1100	3.7	C.7	FMCRD 30-39 D QUAD	103E1789/0	291
976	C12-D005159	N1	-1100	3.7	D.3	FMCRD 30-11 B QUAD	103E1789/0	291
977	C12-D005160	N2	-1100	3.7	D.3	FMCRD 26-23 B QUAD	103E1789/0	291
978	C12-D005161	N3	-1100	3.7	C.7	FMCRD 18-55 D QUAD	103E1789/0	291
979	C12-D005162	N1	-1100	3.7	D.3	FMCRD 18-11 B QUAD	103E1789/0	291

Table 9A.6-2 Fire Hazard Analysis Equipment Database Sorted by Room — Reactor Building (Continued)

Item No.	MPL No	Elect Div.	Elev. Location	Location Number Coord.	Location Alpha Coord.	Description	System Drawing	Room No.
980	C12-D005163	N3	-1100	3.7	C.7	FMCRD 14-51 D QUAD	103E1789/0	291
981	C12-D005164	N2	-1100	3.7	D.3	FMCRD 18-19 B QUAD	103E1789/0	291
982	C12-D005165	N3	-1100	3.7	D.3	FMCRD 10-23 B QUAD	103E1789/0	291
983	C12-D005166	N1	-1100	3.7	D.3	FMCRD 02-31 B QUAD	103E1789/0	291
984	C12-D005167	N2	-1100	3.7	D.3	FMCRD 34-35 B QUAD	103E1789/0	291
985	C12-D005168	N1	-1100	4.3	C.7	FMCRD 54-43 A QUAD	103E1789/0	291
986	C12-D005169	N3	-1100	3.7	D.3	FMCRD 06-27 B QUAD	103E1789/0	291
987	C12-D005170	N3	-1100	4.3	C.7	FMCRD 54-39 A QUAD	103E1789/0	291
988	C12-D005171	N3	-1100	3.7	C.7	FMCRD 10-55 D QUAD	103E1789/0	291
989	C12-D005172	N1	-1100	4.3	D.3	FMCRD 38-23 C QUAD	103E1789/0	291
990	C12-D005173	N1	-1100	3.7	C.7	FMCRD 22-63 D QUAD	103E1789/0	291
991	C12-D005174	N2	-1100	4.3	C.7	FMCRD 42-39 A QUAD	103E1789/0	291
992	C12-D005175	N3	-1100	3.7	D.3	FMCRD 34-03 B QUAD	103E1789/0	291
993	C12-D005176	N2	-1100	3.7	D.3	FMCRD 10-27 B QUAD	103E1789/0	291
994	C12-D005177	N1	-1100	3.7	C.7	FMCRD 30-67 D QUAD	103E1789/0	291
995	C12-D005178	N3	-1100	4.3	D.3	FMCRD 46-23 C QUAD	103E1789/0	291
996	C12-D005179	N1	-1100	3.7	C.7	FMCRD 02-39 D QUAD	103E1789/0	291
997	C12-D005180	N3	-1100	3.7	D.3	FMCRD 14-31 B QUAD	103E1789/0	291
998	C12-D005181	N3	-1100	3.7	C.7	FMCRD 14-39 D QUAD	103E1789/0	291
999	C12-D005182	N1	-1100	3.7	D.3	FMCRD 22-31 B QUAD	103E1789/0	291
1000	C12-D005183	N2	-1100	4.3	C.7	FMCRD 62-39 A QUAD	103E1789/0	291
1001	C12-D005184	N2	-1100	3.7	C.7	FMCRD 34-47 D QUAD	103E1789/0	291
1002	C12-D005185	N1	-1100	4.3	D.3	FMCRD 58-19 C QUAD	103E1789/0	291
1003	C12-D005186	N1	-1100	3.7	C.7	FMCRD 22-51 D QUAD	103E1789/0	291
1004	C12-D005187	N1	-1100	4.3	D.3	FMCRD 50-35 C QUAD	103E1789/0	291
1005	C12-D005188	N3	-1100	4.3	D.3	FMCRD 54-11 C QUAD	103E1789/0	291
1006	C12-D005189	N3	-1100	4.3	D.3	FMCRD 38-15 C QUAD	103E1789/0	291
1007	C12-D005190	N1	-1100	4.3	C.7	FMCRD 42-55 A QUAD	103E1789/0	291
1008	C12-D005191	N1	-1100	4.3	C.7	FMCRD 38-39 A QUAD	103E1789/0	291
1009	C12-D005192	N2	-1100	4.3	D.3	FMCRD 54-23 C QUAD	103E1789/0	291
1010	C12-D005193	N2	-1100	4.3	C.7	FMCRD 50-39 A QUAD	103E1789/0	291
1011	C12-D005194	N2	-1100	3.7	C.7	FMCRD 26-47 D QUAD	103E1789/0	291
1012	C12-D005195	N1	-1100	4.3	D.3	FMCRD 46-07 C QUAD	103E1789/0	291
1013	C12-D005196	N3	-1100	3.7	D.3	FMCRD 22-23 B QUAD	103E1789/0	291

Table 9A.6-2 Fire Hazard Analysis Equipment Database Sorted by Room — Reactor Building (Continued)

Item No.	MPL No	Elect Div.	Elev. Location	Location Number Coord.	Location Alpha Coord.	Description	System Drawing	Room No.
1014	C12-D005197	N2	-1100	4.3	D.3	FMCRD 54-15 C QUAD	103E1789/0	291
1015	C12-D005198	N2	-1100	4.3	C.7	FMCRD 34-55 A QUAD	103E1789/0	291
1016	C12-D005199	N2	-1100	4.3	D.3	FMCRD 50-11 C QUAD	103E1789/0	291
1017	C12-D005200	N2	-1100	3.7	C.7	FMCRD 26-59 D QUAD	103E1789/0	291
1018	C12-D005201	N3	-1100	4.3	D.3	FMCRD 58-15 C QUAD	103E1789/0	291
1019	C12-D005202	N3	-1100	4.3	D.3	FMCRD 50-27 C QUAD	103E1789/0	291
1020	C12-D005203	N1	-1100	3.7	D.3	FMCRD 14-19 B QUAD	103E1789/0	291
1021	C12-D005204	N2	-1100	4.3	C.7	FMCRD 54-55 A QUAD	103E1789/0	291
1022	C12-D005205	N2	-1100	3.7	C.7	FMCRD 30-63 D QUAD	103E1789/0	291
1023	C51-N007A	1	-1100	4.4	C.9	SRM DETECTOR	107E5074/0	291
1024	C51-N007B	2	-1100	3.7	D.2	SRM DETECTOR	107E5074/0	291
1025	C51-N007C	3	-1100	4.2	D.2	SRM DETECTOR	107E5074/0	291
1026	C51-N007D	4	-1100	3.9	C.9	SRM DETECTOR	107E5074/0	291
1027	C51-N007E	1	-1100	4.2	C.7	SRM DETECTOR	107E5074/0	291
1028	C51-N007F	2	-1100	4.2	C.7	SRM DETECTOR	107E5074/0	291
1029	C51-N007G	3	-1100	3.8	D.3	SRM DETECTOR	107E5074/0	291
1030	C51-N007H	4	-1100	4.1	D.1	SRM DETECTOR	107E5074/0	291
1031	C51-N007J	1	-1100	3.6	C.8	SRM DETECTOR	107E5074/0	291
1032	C51-N007L	3	-1100	3.7	C.5	SRM DETECTOR	107E5074/0	291
1033	C51-N011001	1	-1100	4.0	D.0	LPRM 20-53A	107E5074/0	291
1034	C51-N011002	1	-1100	4.0	D.0	LPRM 20-21A	107E5074/0	291
1035	C51-N011003	2	-1100	4.0	D.0	LPRM 12-37A	107E5074/0	291
1036	C51-N011004	3	-1100	4.0	D.0	LPRM 44-61A	107E5074/0	291
1037	C51-N011005	2	-1100	4.0	D.0	LPRM 12-21A	107E5074/0	291
1038	C51-N011006	1	-1100	4.0	D.0	LPRM 52-37A	107E5074/0	291
1039	C51-N011007	3	-1100	4.0	D.0	LPRM 44-29A	107E5074/0	291
1040	C51-N011008	4	-1100	4.0	D.0	LPRM 36-29A	107E5074/0	291
1041	C51-N011009	3	-1100	4.0	D.0	LPRM 60-45	107E5074/0	291
1042	C51-N011010	1	-1100	4.0	D.0	LPRM 20-37A	107E5074/0	291
1043	C51-N011011	3	-1100	4.0	D.0	LPRM 60-29A	107E5074/0	291
1044	C51-N011012	3	-1100	4.0	D.0	LPRM 28-13A	107E5074/0	291
1045	C51-N011013	4	-1100	4.0	D.0	LPRM 04-45A	107E5074/0	291
1046	C51-N011014	4	-1100	4.0	D.0	LPRM 36-13A	107E5074/0	291
1047	C51-N011015	4	-1100	4.0	D.0	LPRM 20-29A	107E5074/0	291

Table 9A.6-2 Fire Hazard Analysis Equipment Database Sorted by Room — Reactor Building (Continued)

Item No.	MPL No	Elect Div.	Elev. Location	Location Number Coord.	Location Alpha Coord.	Description	System Drawing	Room No.
1048	C51-N011016	4	-1100	4.0	D.0	LPRM 52-61A	107E5074/0	291
1049	C51-N011017	4	-1100	4.0	D.0	LPRM 36-61A	107E5074/0	291
1050	C51-N011018	4	-1100	4.0	D.0	LPRM 52-13A	107E5074/0	291
1051	C51-N011019	3	-1100	4.0	D.0	LPRM 12-13A	107E5074/0	291
1052	C51-N011020	2	-1100	4.0	D.0	LPRM 12-53A	107E5074/0	291
1053	C51-N011021	3	-1100	4.0	D.0	LPRM 44-13A	107E5074/0	291
1054	C51-N011022	4	-1100	4.0	D.0	LPRM 36-45A	107E5074/0	291
1055	C51-N011023	2	-1100	4.0	D.0	LPRM 60-37A	107E5074/0	291
1056	C51-N011024	3	-1100	4.0	D.0	LPRM 12-45A	107E5074/0	291
1057	C51-N011025	2	-1100	4.0	D.0	LPRM 60-21A	107E5074/0	291
1058	C51-N011026	2	-1100	4.0	D.0	LPRM 28-37A	107E5074/0	291
1059	C51-N011027	1	-1100	4.0	D.0	LPRM 36-21A	107E5074/0	291
1060	C51-N011028	2	-1100	4.0	D.0	LPRM 44-53A	107E5074/0	291
1061	C51-N011029	4	-1100	4.0	D.0	LPRM 20-45A	107E5074/0	291
1062	C51-N011030	3	-1100	4.0	D.0	LPRM 28-45A	107E5074/0	291
1063	C51-N011031	2	-1100	4.0	D.0	LPRM 28-53A	107E5074/0	291
1064	C51-N011032	1	-1100	4.0	D.0	LPRM 36-53A	107E5074/0	291
1065	C51-N011033	1	-1100	4.0	D.0	LPRM 36-05A	107E5074/0	291
1066	C51-N011034	3	-1100	4.0	D.0	LPRM 28-61A	107E5074/0	291
1067	C51-N011035	1	-1100	4.0	D.0	LPRM 52-21A	107E5074/0	291
1068	C51-N011036	1	-1100	4.0	D.0	LPRM 04-37A	107E5074/0	291
1069	C51-N011037	4	-1100	4.0	D.0	LPRM 52-45A	107E5074/0	291
1070	C51-N011038	4	-1100	4.0	D.0	LPRM 20-61A	107E5074/0	291
1071	C51-N011039	2	-1100	4.0	D.0	LPRM 44-05A	107E5074/0	291
1072	C51-N011040	1	-1100	4.0	D.0	LPRM 52-53A	107E5074/0	291
1073	C51-N011041	4	-1100	4.0	D.0	LPRM 04-29A	107E5074/0	291
1074	C51-N011042	2	-1100	4.0	D.0	LPRM 60-53A	107E5074/0	291
1075	C51-N011043	4	-1100	4.0	D.0	LPRM 52-29A	107E5074/0	291
1076	C51-N011044	3	-1100	4.0	D.0	LPRM 44-45A	107E5074/0	291
1077	C51-N011045	3	-1100	4.0	D.0	LPRM 28-29A	107E5074/0	291
1078	C51-N011046	4	-1100	4.0	D.0	LPRM 20-13A	107E5074/0	291
1079	C51-N011047	3	-1100	4.0	D.0	LPRM 12-29A	107E5074/0	291
1080	C51-N011048	2	-1100	4.0	D.0	LPRM 28-21A	107E5074/0	291
1081	C51-N011049	2	-1100	4.0	D.0	LPRM 44-37A	107E5074/0	291

Table 9A.6-2 Fire Hazard Analysis Equipment Database Sorted by Room — Reactor Building (Continued)

Item No.	MPL No	Elect Div.	Elev. Location	Location Number Coord.	Location Alpha Coord.	Description	System Drawing	Room No.
1082	C51-N011050	2	-1100	4.0	D.0	LPRM 28-05A	107E5074/0	291
1083	C51-N011051	2	-1100	4.0	D.0	LPRM 44-21A	107E5074/0	291
1084	C51-N011052	1	-1100	4.0	D.0	LPRM 36-37A	107E5074/0	291
1085	C51-N012001	3	-1100	4.0	D.0	LPRM 60-37B	107E5074/0	291
1086	C51-N012002	4	-1100	4.0	D.0	LPRM 60-29B	107E5074/0	291
1087	C51-N012003	1	-1100	4.0	D.0	LPRM 36-29B	107E5074/0	291
1088	C51-N012004	3	-1100	4.0	D.0	LPRM 28-53B	107E5074/0	291
1089	C51-N012005	4	-1100	4.0	D.0	LPRM 28-13B	107E5074/0	291
1090	C51-N012006	1	-1100	4.0	D.0	LPRM 52-13B	107E5074/0	291
1091	C51-N012007	4	-1100	4.0	D.0	LPRM 12-45B	107E5074/0	291
1092	C51-N012008	3	-1100	4.0	D.0	LPRM 28-37B	107E5074/0	291
1093	C51-N012009	1	-1100	4.0	D.0	LPRM 36-61B	107E5074/0	291
1094	C51-N012010	4	-1100	4.0	D.0	LPRM 44-61B	107E5074/0	291
1095	C51-N012011	1	-1100	4.0	D.0	LPRM 04-45B	107E5074/0	291
1096	C51-N012012	3	-1100	4.0	D.0	LPRM 12-53B	107E5074/0	291
1097	C51-N012013	1	-1100	4.0	D.0	LPRM 20-29B	107E5074/0	291
1098	C51-N012014	1	-1100	4.0	D.0	LPRM 36-45B	107E5074/0	291
1099	C51-N012015	4	-1100	4.0	D.0	LPRM 28-29B	107E5074/0	291
1100	C51-N012016	4	-1100	4.0	D.0	LPRM 44-13B	107E5074/0	291
1101	C51-N012017	1	-1100	4.0	D.0	LPRM 52-29B	107E5074/0	291
1102	C51-N012018	1	-1100	4.0	D.0	LPRM 36-13B	107E5074/0	291
1103	C51-N012019	4	-1100	4.0	D.0	LPRM 44-45B	107E5074/0	291
1104	C51-N012020	3	-1100	4.0	D.0	LPRM 60-21B	107E5074/0	291
1105	C51-N012021	3	-1100	4.0	D.0	LPRM 44-53B	107E5074/0	291
1106	C51-N012022	1	-1100	4.0	D.0	LPRM 20-13B	107E5074/0	291
1107	C51-N012023	2	-1100	4.0	D.0	LPRM 20-53B	107E5074/0	291
1108	C51-N012024	2	-1100	4.0	D.0	LPRM 20-21B	107E5074/0	291
1109	C51-N012025	1	-1100	4.0	D.0	LPRM 20-45B	107E5074/0	291
1110	C51-N012026	2	-1100	4.0	D.0	LPRM 52-53B	107E5074/0	291
1111	C51-N012027	1	-1100	4.0	D.0	LPRM 04-29B	107E5074/0	291
1112	C51-N012028	2	-1100	4.0	D.0	LPRM 20-37B	107E5074/0	291
1113	C51-N012029	1	-1100	4.0	D.0	LPRM 52-45B	107E5074/0	291
1114	C51-N012030	3	-1100	4.0	D.0	LPRM 44-05B	107E5074/0	291
1115	C51-N012031	3	-1100	4.0	D.0	LPRM 44-37B	107E5074/0	291

Table 9A.6-2 Fire Hazard Analysis Equipment Database Sorted by Room — Reactor Building (Continued)

Item No.	MPL No	Elect Div.	Elev. Location	Location Number Coord.	Location Alpha Coord.	Description	System Drawing	Room No.
1116	C51-N012032	3	-1100	4.0	D.0	LPRM 28-05B	107E5074/0	291
1117	C51-N012033	2	-1100	4.0	D.0	LPRM 52-37B	107E5074/0	291
1118	C51-N012034	4	-1100	4.0	D.0	LPRM 28-45B	107E5074/0	291
1119	C51-N012035	1	-1100	4.0	D.0	LPRM 52-61B	107E5074/0	291
1120	C51-N012036	4	-1100	4.0	D.0	LPRM 28-61B	107E5074/0	291
1121	C51-N012037	4	-1100	4.0	D.0	LPRM 60-45B	107E5074/0	291
1122	C51-N012038	3	-1100	4.0	D.0	LPRM 60-53B	107E5074/0	291
1123	C51-N012039	1	-1100	4.0	D.0	LPRM 20-61B	107E5074/0	291
1124	C51-N012040	2	-1100	4.0	D.0	LPRM 04-37B	107E5074/0	291
1125	C51-N012041	4	-1100	4.0	D.0	LPRM 12-29B	107E5074/0	291
1126	C51-N012042	4	-1100	4.0	D.0	LPRM 12-13B	107E5074/0	291
1127	C51-N012043	4	-1100	4.0	D.0	LPRM 44-29B	107E5074/0	291
1128	C51-N012044	3	-1100	4.0	D.0	LPRM 12-37B	107E5074/0	291
1129	C51-N012045	3	-1100	4.0	D.0	LPRM 44-21B	107E5074/0	291
1130	C51-N012046	3	-1100	4.0	D.0	LPRM 12-21B	107E5074/0	291
1131	C51-N012047	2	-1100	4.0	D.0	LPRM 52-21B	107E5074/0	291
1132	C51-N012048	2	-1100	4.0	D.0	LPRM 36-53B	107E5074/0	291
1133	C51-N012049	2	-1100	4.0	D.0	LPRM 36-37B	107E5074/0	291
1134	C51-N012050	3	-1100	4.0	D.0	LPRM 28-21B	107E5074/0	291
1135	C51-N012051	2	-1100	4.0	D.0	LPRM 36-21B	107E5074/0	291
1136	C51-N012052	2	-1100	4.0	D.0	LPRM 36-05B	107E5074/0	291
1137	C51-N013001	1	-1100	4.0	D.0	LPRM 28-13C	107E5074/0	291
1138	C51-N013002	3	-1100	4.0	D.0	LPRM 36-53C	107E5074/0	291
1139	C51-N013003	1	-1100	4.0	D.0	LPRM 12-13C	107E5074/0	291
1140	C51-N013004	4	-1100	4.0	D.0	LPRM 12-37C	107E5074/0	291
1141	C51-N013005	2	-1100	4.0	D.0	LPRM 52-61C	107E5074/0	291
1142	C51-N013006	2	-1100	4.0	D.0	LPRM 04-45C	107E5074/0	291
1143	C51-N013007	1	-1100	4.0	D.0	LPRM 60-29C	107E5074/0	291
1144	C51-N013008	1	-1100	4.0	D.0	LPRM 28-61C	107E5074/0	291
1145	C51-N013009	3	-1100	4.0	D.0	LPRM 04-37C	107E5074/0	291
1146	C51-N013010	4	-1100	4.0	D.0	LPRM 12-21C	107E5074/0	291
1147	C51-N013011	1	-1100	4.0	D.0	LPRM 60-45C	107E5074/0	291
1148	C51-N013012	2	-1100	4.0	D.0	LPRM 36-13C	107E5074/0	291
1149	C51-N013013	4	-1100	4.0	D.0	LPRM 28-37C	107E5074/0	291

Table 9A.6-2 Fire Hazard Analysis Equipment Database Sorted by Room — Reactor Building (Continued)

Item No.	MPL No	Elect Div.	Elev. Location	Location Number Coord.	Location Alpha Coord.	Description	System Drawing	Room No.
1150	C51-N013014	2	-1100	4.0	D.0	LPRM 20-45C	107E5074/0	291
1151	C51-N013015	2	-1100	4.0	D.0	LPRM 20-13C	107E5074/0	291
1152	C51-N013016	1	-1100	4.0	D.0	LPRM 28-45C	107E5074/0	291
1153	C51-N013017	3	-1100	4.0	D.0	LPRM 36-05C	107E5074/0	291
1154	C51-N013018	3	-1100	4.0	D.0	LPRM 36-37C	107E5074/0	291
1155	C51-N013019	1	-1100	4.0	D.0	LPRM 44-13C	107E5074/0	291
1156	C51-N013020	2	-1100	4.0	D.0	LPRM 36-29C	107E5074/0	291
1157	C51-N013021	4	-1100	4.0	D.0	LPRM 60-37C	107E5074/0	291
1158	C51-N013022	4	-1100	4.0	D.0	LPRM 60-21C	107E5074/0	291
1159	C51-N013023	2	-1100	4.0	D.0	LPRM 52-13C	107E5074/0	291
1160	C51-N013024	4	-1100	4.0	D.0	LPRM 28-21C	107E5074/0	291
1161	C51-N013025	4	-1100	4.0	D.0	LPRM 44-05C	107E5074/0	291
1162	C51-N013026	3	-1100	4.0	D.0	LPRM 36-21C	107E5074/0	291
1163	C51-N013027	2	-1100	4.0	D.0	LPRM 36-61C	107E5074/0	291
1164	C51-N013028	3	-1100	4.0	D.0	LPRM 20-21C	107E5074/0	291
1165	C51-N013029	3	-1100	4.0	D.0	LPRM 52-37C	107E5074/0	291
1166	C51-N013030	4	-1100	4.0	D.0	LPRM 44-53C	107E5074/0	291
1167	C51-N013031	2	-1100	4.0	D.0	LPRM 36-45C	107E5074/0	291
1168	C51-N013032	1	-1100	4.0	D.0	LPRM 44-29C	107E5074/0	291
1169	C51-N013033	3	-1100	4.0	D.0	LPRM 52-53C	107E5074/0	291
1170	C51-N013034	4	-1100	4.0	D.0	LPRM 44-21C	107E5074/0	291
1171	C51-N013035	2	-1100	4.0	D.0	LPRM 04-29C	107E5074/0	291
1172	C51-N013036	4	-1100	4.0	D.0	LPRM 12-53C	107E5074/0	291
1173	C51-N013037	2	-1100	4.0	D.0	LPRM 52-45C	107E5074/0	291
1174	C51-N013038	2	-1100	4.0	D.0	LPRM 20-29C	107E5074/0	291
1175	C51-N013039	2	-1100	4.0	D.0	LPRM 20-61C	107E5074/0	291
1176	C51-N013040	4	-1100	4.0	D.0	LPRM 44-37C	107E5074/0	291
1177	C51-N013041	3	-1100	4.0	D.0	LPRM 20-37C	107E5074/0	291
1178	C51-N013042	4	-1100	4.0	D.0	LPRM 28-05C	107E5074/0	291
1179	C51-N013043	1	-1100	4.0	D.0	LPRM 12-29C	107E5074/0	291
1180	C51-N013044	1	-1100	4.0	D.0	LPRM 28-29C	107E5074/0	291
1181	C51-N013045	1	-1100	4.0	D.0	LPRM 44-61C	107E5074/0	291
1182	C51-N013046	1	-1100	4.0	D.0	LPRM 44-45C	107E5074/0	291
1183	C51-N013047	3	-1100	4.0	D.0	LPRM 20-53C	107E5074/0	291

Table 9A.6-2 Fire Hazard Analysis Equipment Database Sorted by Room — Reactor Building (Continued)

Item No.	MPL No	Elect Div.	Elev. Location	Location Number Coord.	Location Alpha Coord.	Description	System Drawing	Room No.
1184	C51-N013048	4	-1100	4.0	D.0	LPRM 60-53C	107E5074/0	291
1185	C51-N013049	2	-1100	4.0	D.0	LPRM 52-29C	107E5074/0	291
1186	C51-N013050	4	-1100	4.0	D.0	LPRM 28-53C	107E5074/0	291
1187	C51-N013051	3	-1100	4.0	D.0	LPRM 52-21C	107E5074/0	291
1188	C51-N013052	1	-1100	4.0	D.0	LPRM 12-45C	107E5074/0	291
1189	C51-N014001	1	-1100	4.0	D.0	LPRM 60-53D	107E5074/0	291
1190	C51-N014002	1	-1100	4.0	D.0	LPRM 60-37D	107E5074/0	291
1191	C51-N014003	4	-1100	4.0	D.0	LPRM 20-21D	107E5074/0	291
1192	C51-N014004	3	-1100	4.0	D.0	LPRM 36-29D	107E5074/0	291
1193	C51-N014005	3	-1100	4.0	D.0	LPRM 36-61D	107E5074/0	291
1194	C51-N014006	4	-1100	4.0	D.0	LPRM 36-05D	107E5074/0	291
1195	C51-N014007	1	-1100	4.0	D.0	LPRM 12-37D	107E5074/0	291
1196	C51-N014008	3	-1100	4.0	D.0	LPRM 20-29D	107E5074/0	291
1197	C51-N014009	2	-1100	4.0	D.0	LPRM 12-45D	107E5074/0	291
1198	C51-N014010	3	-1100	4.0	D.0	LPRM 20-61D	107E5074/0	291
1199	C51-N014011	2	-1100	4.0	D.0	LPRM 28-61D	107E5074/0	291
1200	C51-N014012	4	-1100	4.0	D.0	LPRM 36-53D	107E5074/0	291
1201	C51-N014013	2	-1100	4.0	D.0	LPRM 44-29D	107E5074/0	291
1202	C51-N014014	4	-1100	4.0	D.0	LPRM 20-37D	107E5074/0	291
1203	C51-N014015	1	-1100	4.0	D.0	LPRM 60-21D	107E5074/0	291
1204	C51-N014016	4	-1100	4.0	D.0	LPRM 52-53D	107E5074/0	291
1205	C51-N014017	4	-1100	4.0	D.0	LPRM 36-37D	107E5074/0	291
1206	C51-N014018	2	-1100	4.0	D.0	LPRM 28-29D	107E5074/0	291
1207	C51-N014019	3	-1100	4.0	D.0	LPRM 52-13D	107E5074/0	291
1208	C51-N014020	1	-1100	4.0	D.0	LPRM 44-21D	107E5074/0	291
1209	C51-N014021	2	-1100	4.0	D.0	LPRM 28-13D	107E5074/0	291
1210	C51-N014022	4	-1100	4.0	D.0	LPRM 36-21D	107E5074/0	291
1211	C51-N014023	2	-1100	4.0	D.0	LPRM 60-45D	107E5074/0	291
1212	C51-N014024	3	-1100	4.0	D.0	LPRM 04-29D	107E5074/0	291
1213	C51-N014025	1	-1100	4.0	D.0	LPRM 28-37D	107E5074/0	291
1214	C51-N014026	1	-1100	4.0	D.0	LPRM 44-05D	107E5074/0	291
1215	C51-N014027	1	-1100	4.0	D.0	LPRM 28-53D	107E5074/0	291
1216	C51-N014028	3	-1100	4.0	D.0	LPRM 36-13D	107E5074/0	291
1217	C51-N014029	1	-1100	4.0	D.0	LPRM 44-53D	107E5074/0	291

Table 9A.6-2 Fire Hazard Analysis Equipment Database Sorted by Room — Reactor Building (Continued)

Item No.	MPL No	Elect Div.	Elev. Location	Location Number Coord.	Location Alpha Coord.	Description	System Drawing	Room No.
1218	C51-N014030	3	-1100	4.0	D.0	LPRM 36-45D	107E5074/0	291
1219	C51-N014031	2	-1100	4.0	D.0	LPRM 44-13D	107E5074/0	291
1220	C51-N014032	4	-1100	4.0	D.0	LPRM 52-21D	107E5074/0	291
1221	C51-N014033	3	-1100	4.0	D.0	LPRM 52-45D	107E5074/0	291
1222	C51-N014034	4	-1100	4.0	D.0	LPRM 04-37D	107E5074/0	291
1223	C51-N014035	3	-1100	4.0	D.0	LPRM 20-45D	107E5074/0	291
1224	C51-N014036	2	-1100	4.0	D.0	LPRM 12-29D	107E5074/0	291
1225	C51-N014037	2	-1100	4.0	D.0	LPRM 12-13D	107E5074/0	291
1226	C51-N014038	2	-1100	4.0	D.0	LPRM 60-29D	107E5074/0	291
1227	C51-N014039	1	-1100	4.0	D.0	LPRM 12-53D	107E5074/0	291
1228	C51-N014040	1	-1100	4.0	D.0	LPRM 28-05D	107E5074/0	291
1229	C51-N014041	4	-1100	4.0	D.0	LPRM 20-53D	107E5074/0	291
1230	C51-N014042	3	-1100	4.0	D.0	LPRM 52-29D	107E5074/0	291
1231	C51-N014043	4	-1100	4.0	D.0	LPRM 52-37D	107E5074/0	291
1232	C51-N014044	3	-1100	4.0	D.0	LPRM 04-45D	107E5074/0	291
1233	C51-N014045	3	-1100	4.0	D.0	LPRM 52-61D	107E5074/0	291
1234	C51-N014046	2	-1100	4.0	D.0	LPRM 28-45D	107E5074/0	291
1235	C51-N014047	1	-1100	4.0	D.0	LPRM 44-37D	107E5074/0	291
1236	C51-N014048	1	-1100	4.0	D.0	LPRM 28-21D	107E5074/0	291
1237	C51-N014049	2	-1100	4.0	D.0	LPRM 44-61D	107E5074/0	291
1238	C51-N014050	2	-1100	4.0	D.0	LPRM 44-45D	107E5074/0	291
1239	C51-N014051	1	-1100	4.0	D.0	LPRM 12-21D	107E5074/0	291
1240	C51-N014052	3	-1100	4.0	D.0	LPRM 20-13D	107E5074/0	291
1241	G31-TE024	N	-1700	3.8	C.8	TEMP ELEMENT	107E5051/0	291
1242	G31-TE025	N	-1700	3.8	C.8	TEMP ELEMENT	107E5051/0	291
1243	P21-FS051A	N	2000	3.7	D.2	FLO SW (RIP C00LER)	107E5112/0	291
1244	P21-FS051B	N	2000	4.3	D.2	FLO SW (RIP C00LER)	107E5112/0	291
1245	P21-FS052A	N	2000	3.7	C.8	FLO SW (RIP C00LER)	107E5112/0	291
1246	P21-FS052B	N	2000	4.3	C.8	FLO SW (RIP C00LER)	107E5112/0	291
1247	P21-FS053A	N	2000	4.1	C.7	FLO SW (RIP C00LER)	107E5112/0	291
1248	P21-FS053B	N	2000	3.9	C.6	FLO SW (RIP C00LER)	107E5112/0	291
1249	P21-FS054A	N	2000	4.4	D.0	FLO SW (RIP C00LER)	107E5112/0	291
1250	P21-FS054B	N	2000	3.6	D.0	FLO SW (RIP C00LER)	107E5112/0	291
1251	P21-FS055A	N	2000	4.1	D.4	FLO SW (RIP C00LER)	107E5112/0	291

Table 9A.6-2 Fire Hazard Analysis Equipment Database Sorted by Room — Reactor Building (Continued)

Item No.	MPL No	Elect Div.	Elev. Location	Location Number Coord.	Location Alpha Coord.	Description	System Drawing	Room No.
1252	P21-FS055B	N	2000	3.9	D.4	FLO SW (RIP C00LER)	107E5112/0	291
1253	P21-TE046A	N	2000	3.7	D.2	TEMP ELEM (RIP COOLER)	107E5112/0	291
1254	P21-TE046B	N	2000	4.3	D.2	TEMP ELEM (RIP COOLER)	107E5112/0	291
1255	P21-TE047A	N	2000	3.7	C.8	TEMP ELEM (RIP COOLER)	107E5112/0	291
1256	P21-TE047B	N	2000	4.3	C.8	TEMP ELEM (RIP COOLER)	107E5112/0	291
1257	P21-TE048A	N	2000	4.1	C.7	TEMP ELEM (RIP COOLER)	107E5112/0	291
1258	P21-TE048B	N	2000	3.9	C.6	TEMP ELEM (RIP COOLER)	107E5112/0	291
1259	P21-TE049A	N	2000	4.4	D.0	TEMP ELEM (RIP COOLER)	107E5112/0	291
1260	P21-TE049B	N	2000	3.6	D.0	TEMP ELEM (RIP COOLER)	107E5112/0	291
1261	P21-TE050A	N	2000	4.1	D.4	TEMP ELEM (RIP COOLER)	107E5112/0	291
1262	P21-TE050B	N	2000	3.9	D.4	TEMP ELEM (RIP COOLER)	107E5112/0	291
1263	T31-TE050A	N	1000	4.4	C.7	TEMP ELEMENT	107E6043/0	291
1264	T31-TE050B	N	1000	3.6	D.3	TEMP ELEMENT	107E6043/0	291
1265	T31-TE050C	N	1000	4.4	D.3	TEMP ELEMENT	107E6043/0	291
1266	R22 M/C E	1	4800	3.7	A.5	M/C E - MED VOLT SWTGR	107E5072/0	310
1267	R23 P/C E10	1	4800	4.9	A.5	P/C E10 - LO VOLT SWTGR	107E5072/0	310
1268	R46-CVCF A11	1	4800	4.5	A.5	VITAL D1 120 VAC DIST-R/B	107E5076/0	310
1269	R46-CVCF AN11	N	4800	5.2	A.2	VITAL ND 120 VAC - R/B	107E5076/0	310
1270	R47-IPA10	1	4800	4.0	A.5	120 VAC INSTR DIST PNL	112D4885/0	310
1271	R24 MCC E111	1	4800	5.5	A.2	MCC E111 - R/B	107E5072/0	310
1272	R42 DCMCC A1	1	4800	6.2	A.5	125 VDC MCC A1 - R/B	107E5075/0	310
1273	R24 MCC E112	1	4800	5.2	A.8	MCC E112 - R/B	107E5072/0	310
1274	R24 MCC E113	1	4800	4.5	A.8	MCC E113 - R/B	107E5072/0	310
1275	R24 MCC E110	1	4800	2.7	A.1	MCC E110 - R/B	107E5072/0	310
1276	R42-DCN A10	N	4800	2.6	A.3	125 VDC INSTR DIST PNL	107E5075/0	310
1277	H23-P008*	1	4800	2.4	A.3	MULTIPLEXER	----?----	310
1278	H23-P009*	1	4800	2.2	A.3	MULTIPLEXER	----?----	310
1279	H23-P010*	1	4800	2.1	A.3	MULTIPLEXER	----?----	310
1280	H23-P012*	1	4800	2.1	A.1	MULTIPLEXER	----?----	310
1281	H23-P013*	1	4800	2.3	A.1	MULTIPLEXER	----?----	310
1282	R42-DC A10	1	4800	2.5	A.3	125 VDC INSTR DIST PNL	107E5075/0	310
1283	X-321A	1	6000	5.1	B.4	SUPP CHAMBER PRESSURE	107E6043/0	311

Table 9A.6-2 Fire Hazard Analysis Equipment Database Sorted by Room — Reactor Building (Continued)

Item No.	MPL No	Elect Div.	Elev. Location	Location Number Coord.	Location Alpha Coord.	Description	System Drawing	Room No.
1284	X-331A	1	6000	4.9	B.2	CAMS GAMMA DETECTOR	10R281-431	311
1285	E51-F039	1	5800	5.7	B.9	MO GATE VALVE (ST EXH)	103E1795/1	313
1286	T31-TE052P	N	6000	5.6	B.9	TEMP ELEMENT	107E6043/0	313
1287	X-213	1	5800	5.7	B.9	RCIC TURBINE EXHAUST	795E883/4	313
1288	X-215	1	5800	5.7	C.0	RCIC VAC PUMP EXHAUST	795E883/4	313
1289	T31-F721A	N	6500	5.7	B.8	SO VALVE	107E6043/0	313
1290	T31-F721B	N	6500	5.8	B.8	SO VALVE	107E6043/0	313
1291	B21-LT001A	1	4800	5.9	C.7	LEVEL TRANSMITTER	103E1791/1	314
1292	B21-LT002A	1	4800	5.9	C.7	LEVEL TRANSMITTER	103E1791/1	314
1293	B21-LT003A	1	4800	5.9	C.7	LEVEL TRANSMITTER	103E1791/1	314
1294	B21-LT003E	1	4800	5.9	C.7	LEVEL TRANSMITTER	103E1791/1	314
1295	B21-LT004	N	4800	5.9	C.7	LEVEL TRANSMITTER	103E1791/1	314
1296	B21-LT006A	1	4800	5.9	C.7	LEVEL TRANSMITTER	103E1791/1	314
1297	B21-PT007A	1	4800	5.9	C.7	PRESS TRANSMITTER	103E1791/1	314
1298	B21-PT008A	1	4800	5.9	C.7	PRESS TRANSMITTER	103E1791/1	314
1299	B21-PT009	1	4800	5.9	C.7	PRESS TRANSMITTER	103E1791/1	314
1300	B21-PT011A	N	4800	5.9	C.7	PRESS TRANSMITTER	103E1791/1	314
1301	B21-PT025A	1	4800	5.9	C.7	PRESS TRANSMITTER	103E1791/1	314
1302	B21-TE020A	1	4800	5.9	C.7	TEMP ELEMENT	103E1791/1	314
1303	B21-TE022A	1	4800	5.9	C.7	TEMP ELEMENT	103E1791/1	314
1304	B21-TE024A	1	4800	5.9	C.7	TEMP ELEMENT	103E1791/1	314
1305	C31-FT403A	N	4800	5.8	C.4	FLOW TRANSMITTER	796E361	314
1306	C31-FT404A	N	4800	5.8	C.4	FLOW TRANSMITTER	796E361	314
1307	D21-RE015	N	4800	5.8	C.5	AREA RAD DETECTOR	299X701-171/0	314
1308	E31-DPT006A	1	4800	6.0	C.4	RCIC STM FLOW XMTR	103E1792/1	314
1309	E31-DPT013A	1	4800	6.0	C.4	CUW SUC FLOW XMTR	103E1792/1	314
1310	E31-DPT014A	1	4800	6.0	C.4	CUW RET FLOW XMTR	103E1792/1	314
1311	E31-DPT015A	1	4800	6.0	C.4	CUW B/D FLOW XMTR	103E1792/1	314
1312	E31-DPT016A	1	4800	6.0	C.4	MSL FLOW XMTR	103E1792/1	314
1313	E31-DPT016E	1	4800	6.0	C.4	MSL FLOW XMTR	103E1792/1	314
1314	E31-DPT016J	1	4800	6.0	C.4	MSL FLOW XMTR	103E1792/1	314
1315	E31-DPT016N	1	4800	6.0	C.4	MSL FLOW XMTR	103E1792/1	314
1316	E31-PT007A	1	4800	6.0	C.4	RCIC STM PRESS XMTR	103E1792/1	314

Table 9A.6-2 Fire Hazard Analysis Equipment Database Sorted by Room — Reactor Building (Continued)

Item No.	MPL No	Elect Div.	Elev. Location	Location Number Coord.	Location Alpha Coord.	Description	System Drawing	Room No.
1317	H22-P013A*	1	4800	5.9	C.7	REA SYS INSTR RACK A	10Q273-282	314
1318	H22-P014A*	1	4800	5.8	C.4	MAIN STM FLOW INST RACK A	10Q273-282	314
1319	H22-P015A*	1	4800	6.0	C.4	LEAK DET SYS INST RACK A	10Q273-282	314
1320	T31-F737A	1	6500	5.9	C.5	SO VALVE	107E6043/0	314
1321	T31-POS071A	N	4800	5.9	C.5	POSITION SWITCH	107E6043/0	314
1322	B31-ST100F*	N	4800	6.8	B.4	SPEED TRANSMITTER	107E5194/0	315
1323	B31-ST101F*	N	4800	6.8	B.4	SPEED TRANSMITTER	107E5194/0	315
1324	B31-VBT100F*	N	4800	6.8	B.4	VIBRATION TRANSMITTER	107E5194/0	315
1325	B31-VBT101F*	N	4800	6.8	B.4	VIBRATION TRANSMITTER	107E5194/0	315
1326	C81-C001F	N	4800	6.8	B.4	ADJ SPEED DRIVE-RIP F	299X701-146/0	315
1327	R10-C001F*	N	4800	6.8	B.8	RIP ASD OUTPUT XFMR	----?----	315
1328	B31-ST100A*	N	4800	6.8	A.4	SPEED TRANSMITTER	107E5194/0	315
1329	B31-ST101A*	N	4800	6.8	A.4	SPEED TRANSMITTER	107E5194/0	315
1330	B31-VBT100A*	N	4800	6.8	A.4	VIBRATION TRANSMITTER	107E5194/0	315
1331	B31-VBT101A*	N	4800	6.8	A.4	VIBRATION TRANSMITTER	107E5194/0	315
1332	C81-C001A	N	4800	6.8	A.4	ADJ SPEED DRIVE-RIP A	299X701-146/0	315
1333	R10-C001A*	N	4800	6.8	A.8	RIP ASD OUTPUT XFMR	----?----	315
1334	X-243	1	8850	5.1	B.3	VGL EXHGAUST	795E877	318
1335	T31-F003	2	8500	5.5	B.6	AO VALVE	107E6043/0	318
1336	T31-FT003	N	8500	5.5	B.6	FLOW TRANSMITTER	107E6043/0	318
1337	T31-TE004	N	8500	5.5	B.6	TEMP ELEMENT	107E6043/0	318
1338	T31-TE051L	N	8500	5.4	B.5	TEMP ELEMENT	107E6043/0	318
1339	T31-TE051N	N	8500	5.5	B.6	TEMP ELEMENT	107E6043/0	318
1340	T31-TI004	N	8500	5.5	B.6	TEMP INDICATOR	107E6043/0	318
1341	X-240	N	8500	5.4	B.6	WETWELL PURGE SUCTION	107E6043/0	318
1342	E31-F004	2	8850	5.9	C.7	DW FPM A/O SOL VALVE (IB)	103E1792/1	318
1343	E31-F005	1	8850	5.9	C.7	DW FPM A/O SOL VALVE (OB)	103E1792/1	318
1344	T31-F001	1	8500	5.8	C.2	AO VALVE	107E6043/0	318
1345	X-320	1	8850	5.8	C.2	VAC BKR AIR SUPPLY	107E6043/0	318

Table 9A.6-2 Fire Hazard Analysis Equipment Database Sorted by Room — Reactor Building (Continued)

Item No.	MPL No	Elect Div.	Elev. Location	Location Number Coord.	Location Alpha Coord.	Description	System Drawing	Room No.
1346	X-330	?	8850	5.8	C.6	LDS MONITOR RETURN	796E300	318
1347	X-334	N	8850	5.8	C.3	D/W DEW PT METER RETURN	----?----	318
1348	B31-ST100C*	N	4800	1.2	F.4	SPEED TRANSMITTER	107E5194/0	320
1349	B31-ST101C*	N	4800	1.2	F.4	SPEED TRANSMITTER	107E5194/0	320
1350	B31-VBT100K*	N	4800	1.2	F.4	VIBRATION TRANSMITTER	107E5194/0	320
1351	B31-VBT101K*	N	4800	1.2	F.4	VIBRATION TRANSMITTER	107E5194/0	320
1352	C81-C001C	N	4800	1.2	F.4	ADJ SPEED DRIVE-RIP C	299X701-146/0	320
1353	H23-P021*	N	4800	1.9	F.9	MULTIPLEXER	----?----	320
1354	R10-C001G*	N	4800	1.8	F.3	RIP ASD OUTPUT XFMR	----?----	320
1355	R10-C001K*	N	4800	1.2	F.7	RIP ASD OUTPUT XFMR	----?----	320
1356	B31-ST100G*	N	4800	1.2	E.8	SPEED TRANSMITTER	107E5194/0	320
1357	B31-ST100K*	N	4800	1.2	E.3	SPEED TRANSMITTER	107E5194/0	320
1358	B31-ST101G*	N	4800	1.2	E.8	SPEED TRANSMITTER	107E5194/0	320
1359	B31-ST101K*	N	4800	1.2	E.3	SPEED TRANSMITTER	107E5194/0	320
1360	B31-VBT100C*	N	4800	1.2	E.3	VIBRATION TRANSMITTER	107E5194/0	320
1361	B31-VBT100G*	N	4800	1.2	E.8	VIBRATION TRANSMITTER	107E5194/0	320
1362	B31-VBT101C*	N	4800	1.2	E.3	VIBRATION TRANSMITTER	107E5194/0	320
1363	B31-VBT101G*	N	4800	1.2	E.8	VIBRATION TRANSMITTER	107E5194/0	320
1364	C81-C001G	N	4800	1.2	E.8	ADJ SPEED DRIVE-RIP G	299X701-146/0	320
1365	C81-C001K	N	4800	1.2	E.7	ADJ SPEED DRIVE-RIP K	299X701-146/0	320
1366	P24-F216B*	N	4800	1.5	D.1	TCV; RIP AREA B	107E5176/0	320
1367	T31-TE052R	N	6000	2.5	E.6	TEMP ELEMENT	107E6043/0	321
1368	D21-RE017	N	4800	2.8	F.0	AREA RAD DETECTOR	299X701-171/0	321
1369	H23-P022*	N	4800	2.8	F.0	MULTIPLEXER	----?----	321
1370	X-300B	2	6000	2.9	E.7	COMP LEAD WIRE & INSTR	107E6043/0	321
1371	X-321B	2	6000	2.7	E.5	SUPP CHAMBER PRESSURE	107E6043/0	321
1372	H23-P023*	N	4800	3.8	F.0	MULTIPLEXER	----?----	321
1373	X-331B	2	6000	2.5	E.4	CAMS GAMMA DETECTOR	10R281-431	321

Table 9A.6-2 Fire Hazard Analysis Equipment Database Sorted by Room — Reactor Building (Continued)

Item No.	MPL No	Elect Div.	Elev. Location	Location Number Coord.	Location Alpha Coord.	Description	System Drawing	Room No.
1374	D23-F006B	2	6000	2.6	E.4	MO GLOBE VALVE	107E5139/1	321
1375	D23-F007B	2	6000	2.6	E.4	MO GLOBE VALVE	107E5139/1	321
1376	D23-F008B	2	6000	2.6	E.4	MO GLOBE VALVE	107E5139/1	321
1377	X-332B	2	6000	2.6	E.5	CAMS A-C SAMPLING	10R281-431	321
1378	U63-C005*	N	4800	1.9	E.8	STORM DRAIN SUMP PUMP	10S539-655	322
1379	U63-LS001	N	4800	1.9	E.8	LEVEL SWITCH	10S539-655	322
1380	U63-LS002	N	4800	1.9	E.8	LEVEL SWITCH	10S539-655	322
1381	B21-LT001B	2	4800	2.1	D.2	LEVEL TRANSMITTER	103E1791/1	323
1382	B21-LT002B	2	4800	2.1	D.2	LEVEL TRANSMITTER	103E1791/1	323
1383	B21-LT003B	2	4800	2.1	D.2	LEVEL TRANSMITTER	103E1791/1	323
1384	B21-LT003F	2	4800	2.1	D.2	LEVEL TRANSMITTER	103E1791/1	323
1385	B21-LT005	N	4800	2.1	D.2	LEVEL TRANSMITTER	103E1791/1	323
1386	B21-LT006B	2	4800	2.1	D.2	LEVEL TRANSMITTER	103E1791/1	323
1387	B21-PT007B	2	4800	2.1	D.2	PRESS TRANSMITTER	103E1791/1	323
1388	B21-PT008B	2	4800	2.1	D.2	PRESS TRANSMITTER	103E1791/1	323
1389	B21-PT011B	N	4800	2.1	D.2	PRESS TRANSMITTER	103E1791/1	323
1390	B21-PT025B	2	4800	2.1	D.2	PRESS TRANSMITTER	103E1791/1	323
1391	B21-TE020B	2	4800	2.1	D.2	TEMP ELEMENT	103E1791/1	323
1392	B21-TE022B	2	4800	2.1	D.2	TEMP ELEMENT	103E1791/1	323
1393	B21-TE024B	2	4800	2.1	D.2	TEMP ELEMENT	103E1791/1	323
1394	C31-FT403B	N	4800	2.1	D.5	FLOW TRANSMITTER	796E361	323
1395	C31-FT404B	N	4800	2.1	D.5	FLOW TRANSMITTER	796E361	323
1396	D21-RE016	N	4800	2.0	D.2	AREA RAD DETECTOR	299X701-171/0	323
1397	E11-F019B	2	4800	2.1	D.4	MO GLOBE VALVE (SPRAY)	103E1797/1	323
1398	E31-DPT006B	2	4800	2.0	D.4	RCIC STM FLOW XMTR	103E1792/1	323
1399	E31-DPT013B	2	4800	2.0	D.4	CUW SUC FLOW XMTR	103E1792/1	323
1400	E31-DPT014B	2	4800	2.0	D.4	CUW RET FLOW XMTR	103E1792/1	323
1401	E31-DPT015B	2	4800	2.0	D.4	CUW B/D FLOW XMTR	103E1792/1	323
1402	E31-DPT016B	2	4800	2.0	D.4	MSL FLOW XMTR	103E1792/1	323
1403	E31-DPT016F	2	4800	2.0	D.4	MSL FLOW XMTR	103E1792/1	323
1404	E31-DPT016K	2	4800	2.0	D.4	MSL FLOW XMTR	103E1792/1	323
1405	E31-DPT016P	2	4800	2.0	D.4	MSL FLOW XMTR	103E1792/1	323
1406	E31-PT007B	2	4800	2.0	D.4	RCIC STM PRESS XMTR	103E1792/1	323

Table 9A.6-2 Fire Hazard Analysis Equipment Database Sorted by Room — Reactor Building (Continued)

Item No.	MPL No	Elect Div.	Elev. Location	Location Number Coord.	Location Alpha Coord.	Description	System Drawing	Room No.
1407	H22-P013B*	2	4800	2.1	D.2	REA SYS INSTR RACK B	10Q273-282	323
1408	H22-P014B*	2	4800	2.1	D.5	MAIN STM FLOW INST RACK B	10Q273-282	323
1409	H22-P015B*	2	4800	2.0	D.3	LEAK DET SYS INST RACK B	10Q273-282	323
1410	T31-DPT057	N	6500	2.1	D.5	DIFF PRESS TRANSMITTER	107E6043/0	323
1411	T31-DPT101B	2	6600	2.1	D.5	DIFF PRESS TRANSMITTER	107E6043/0	323
1412	T31-F737B	1	6500	2.1	D.5	SO VALVE	107E6043/0	323
1413	T31-F805B	2	6600	2.1	D.5	SO VALVE	107E6043/0	323
1414	T31-POS071B	N	4800	2.1	D.5	POSITION SWITCH	107E6043/0	323
1415	T31-PT056A	N	6500	2.0	D.5	TEMP INDICATOR	107E6043/0	323
1416	T31-PT056B	N	6500	2.1	D.5	PRESSURE TRANSMITTER	107E6043/0	323
1417	T31-F006	2	9000	2.5	E.3	AO VALVE	107E6043/0	325
1418	T31-F007	2	9000	2.5	E.3	AO VALVE	107E6043/0	325
1419	X-241	N	9000	2.5	E.3	WETWELL PURGE EXHAUST	107E6043/0	325
1420	H23-P014*	2	4800	2.4	F.6	MULTIPLEXER	----?----	326
1421	R24 MCC F112	2	4800	2.5	F.9	MCC F112 - R/B	107E5072/0	326
1422	R24 MCC F113	2	4800	2.5	F.9	MCC F113 - R/B	107E5072/0	326
1423	H23-P015*	2	4800	2.6	F.5	MULTIPLEXER	----?----	326
1424	H23-P016*	2	4800	2.6	F.3	MULTIPLEXER	----?----	326
1425	H23-P017*	2	4800	2.6	F.2	MULTIPLEXER	----?----	326
1426	R42-DC B10	2	4800	2.6	F.5	125 VDC INSTR DIST PNL	107E5075/0	326
1427	R42-DCN B10	N	4800	2.6	F.6	125 VDC INSTR DIST PNL	107E5075/0	326
1428	R24 MCC F110	2	4800	3.4	F.3	MCC F110 - R/B	107E5072/0	326
1429	R24 MCC F111	2	4800	3.4	F.2	MCC F111 - R/B	107E5072/0	326
1430	R23 P/C F10	2	4800	3.5	F.8	P/C F10 - LO VOLT SWTGR	107E5072/0	326
1431	R46-CVCF BN11	N	4800	3.5	F.5	VITAL ND 120 VAC - R/B	107E5076/0	326
1432	R47-IPB10	2	4800	4.0	F.5	120 VAC INSTR DIST PNL	112D4885/0	326
1433	H23-P018*	2	4800	4.3	F.9	MULTIPLEXER	----?----	326
1434	R22 M/C F	2	4800	4.5	F.3	M/C F - MED VOLT SWTGR	107E5072/0	326
1435	R46-CVCF B11	2	4800	4.5	F.5	VITAL D2 120 VAC - R/B	107E5076/0	326
1436	X-200A	2	8900	2.2	D.3	RHR B WETWELL SPRAY	795E880/3	327
1437	X-200B	3	8900	5.9	D.3	RHR C WETWELL SPRAY	795E880/3	330

Table 9A.6-2 Fire Hazard Analysis Equipment Database Sorted by Room — Reactor Building (Continued)

Item No.	MPL No	Elect Div.	Elev. Location	Location Number Coord.	Location Alpha Coord.	Description	System Drawing	Room No.
1438	P24-F216A*	N	4800	6.5	D.1	TCV; RIP AREA A	107E5176/0	331
1439	B31-ST100B*	N	4800	6.8	E.3	SPEED TRANSMITTER	107E5194/0	331
1440	B31-ST100E*	N	4800	6.8	E.8	SPEED TRANSMITTER	107E5194/0	331
1441	B31-ST100H*	N	4800	6.8	F.4	SPEED TRANSMITTER	107E5194/0	331
1442	B31-ST101B*	N	4800	6.8	E.3	SPEED TRANSMITTER	107E5194/0	331
1443	B31-ST101E*	N	4800	6.8	E.8	SPEED TRANSMITTER	107E5194/0	331
1444	B31-ST101H*	N	4800	6.8	F.4	SPEED TRANSMITTER	107E5194/0	331
1445	B31-VBT100B*	N	4800	6.8	E.3	VIBRATION TRANSMITTER	107E5194/0	331
1446	B31-VBT100E*	N	4800	6.8	E.8	VIBRATION TRANSMITTER	107E5194/0	331
1447	B31-VBT100H*	N	4800	6.8	F.4	VIBRATION TRANSMITTER	107E5194/0	331
1448	B31-VBT101B*	N	4800	6.8	E.3	VIBRATION TRANSMITTER	107E5194/0	331
1449	B31-VBT101E*	N	4800	6.8	E.8	VIBRATION TRANSMITTER	107E5194/0	331
1450	B31-VBT101H*	N	4800	6.8	F.4	VIBRATION TRANSMITTER	107E5194/0	331
1451	C81-C001B	N	4800	6.8	E.3	ADJ SPEED DRIVE-RIP B	299X701-146/0	331
1452	C81-C001E	N	4800	6.8	E.8	ADJ SPEED DRIVE-RIP E	299X701-146/0	331
1453	C81-C001H	N	4800	6.8	F.4	ADJ SPEED DRIVE-RIP H	299X701-146/0	331
1454	R10-C001H*	N	4800	6.8	F.8	RIP ASD OUTPUT XFMR	----?----	331
1455	B21-LT001C	3	4800	5.9	D.2	LEVEL TRANSMITTER	103E1791/1	332
1456	B21-LT002C	3	4800	5.9	D.2	LEVEL TRANSMITTER	103E1791/1	332
1457	B21-LT003C	3	4800	5.9	D.2	LEVEL TRANSMITTER	103E1791/1	332
1458	B21-LT003G	3	4800	5.9	D.2	LEVEL TRANSMITTER	103E1791/1	332
1459	B21-PT007C	3	4800	5.9	D.2	PRESS TRANSMITTER	103E1791/1	332
1460	B21-PT008C	3	4800	5.9	D.2	PRESS TRANSMITTER	103E1791/1	332
1461	B21-PT011C	N	4800	5.9	D.2	PRESS TRANSMITTER	103E1791/1	332
1462	B21-PT025C	3	4800	5.9	D.2	PRESS TRANSMITTER	103E1791/1	332
1463	C31-FT403C	N	4800	5.9	D.5	FLOW TRANSMITTER	796E361	332
1464	C31-FT404C	N	4800	5.9	D.5	FLOW TRANSMITTER	796E361	332
1465	E11-F019C	3	4800	5.9	D.4	MO GLOBE VALVE (SPRAY)	103E1797/1	332
1466	E31-DPT006C	3	4800	5.9	D.4	RCIC STM FLOW XMTR	103E1792/1	332
1467	E31-DPT013C	3	4800	5.9	D.4	CUW SUC FLOW XMTR	103E1792/1	332

Table 9A.6-2 Fire Hazard Analysis Equipment Database Sorted by Room — Reactor Building (Continued)

Item No.	MPL No	Elect Div.	Elev. Location	Location Number Coord.	Location Alpha Coord.	Description	System Drawing	Room No.
1468	E31-DPT014C	3	4800	5.9	D.4	CUW RET FLOW XMTR	103E1792/1	332
1469	E31-DPT015C	3	4800	5.9	D.4	CUW B/D FLOW XMTR	103E1792/1	332
1470	E31-DPT016C	3	4800	5.9	D.4	MSL FLOW XMTR	103E1792/1	332
1471	E31-DPT016G	3	4800	5.9	D.4	MSL FLOW XMTR	103E1792/1	332
1472	E31-DPT016L	3	4800	5.9	D.4	MSL FLOW XMTR	103E1792/1	332
1473	E31-DPT016R	3	4800	5.9	D.4	MSL FLOW XMTR	103E1792/1	332
1474	E31-PT007C	3	4800	5.9	D.4	RCIC STM PRESS XMTR	103E1792/1	332
1475	H22-P013C*	3	4800	5.9	D.2	REA SYS INSTR RACK C	10Q273-282	332
1476	H22-P014C*	3	4800	5.9	D.5	MAIN STM FLOW INST RACK C	10Q273-282	332
1477	H22-P015C*	3	4800	6.0	D.4	LEAK DET SYS INST RACK C	10Q273-282	332
1478	T31-DPT101A	1	6600	5.9	D.5	DIFF PRESS TRANSMITTER	107E6043/0	332
1479	T31-F805A	1	6600	5.9	D.5	SO VALVE	107E6043/0	332
1480	D23-F007A	1	6000	5.5	E.3	MO GLOBE VALVE	107E5139/1	335
1481	D23-F006A	1	6000	5.5	E.3	MO GLOBE VALVE	107E5139/1	335
1482	D23-F008A	1	6000	5.5	E.3	MO GLOBE VALVE	107E5139/1	335
1483	H23-P025*	N	4800	5.6	E.3	MULTIPLEXER	----?----	335
1484	X-300A	1	6000	5.5	E.3	COMP LEAD WIRE & INSTR	107E6043/0	335
1485	X-332A	1	6000	5.5	E.3	CAMS A-C SAMPLING	10R281-431	335
1486	H23-P024*	N	4800	4.8	F.0	MULTIPLEXER	----?----	335
1487	U63-C006*	N	4800	6.1	E.8	STORM DRAIN SUMP PUMP	10S539-655	336
1488	U63-LS003	N	4800	6.1	E.8	LEVEL SWITCH	10S539-655	336
1489	U63-LS004	N	4800	6.1	E.8	LEVEL SWITCH	10S539-655	336
1490	H23-P019*	3	4800	5.0	F.1	MULTIPLEXER	----?----	337
1491	H23-P020*	3	4800	5.2	F.1	MULTIPLEXER	----?----	337
1492	R22 M/C G	3	4800	5.9	F.3	M/C G - MED VOLT SWTGR	107E5072/0	337
1493	R23 P/C G10	3	4800	5.3	F.8	P/C G10 - LO VOLT SWTGR	107E5072/0	337
1494	R24 MCC G110	3	4800	6.0	F.7	MCC G110 - R/B	107E5072/0	337
1495	R24 MCC G111	3	4800	6.0	F.7	MCC G111 - R/B	107E5072/0	337
1496	R24 MCC G112	3	4800	5.2	F.4	MCC G112 - R/B	107E5072/0	337
1497	R24 MCC G113	3	4800	5.2	F.4	MCC G113 - R/B	107E5072/0	337

Table 9A.6-2 Fire Hazard Analysis Equipment Database Sorted by Room — Reactor Building (Continued)

Item No.	MPL No	Elect Div.	Elev. Location	Location Number Coord.	Location Alpha Coord.	Description	System Drawing	Room No.
1498	R42-DC C10	3	4800	5.0	F.1	125 VDC INSTR DIST PNL	107E5075/0	337
1499	R42-DCN C10	N	4800	5.3	F.1	125 VDC INSTR DIST PNL	107E5075/0	337
1500	R46-CVCF C11	3	4800	5.5	F.5	VITAL D3 120 VAC - R/B	107E5076/0	337
1501	R46-CVCF CN11	N	4800	5.4	F.4	VITAL ND 120 VAC - R/B	107E5076/0	337
1502	R47-IPC10	3	4800	5.5	F.5	120 VAC INSTR DIST PNL	112D4885/0	337
1503	B31-ST100D*	N	4800	1.2	B.6	SPEED TRANSMITTER	107E5194/0	340
1504	B31-ST100J*	N	4800	1.2	C.2	SPEED TRANSMITTER	107E5194/0	340
1505	B31-ST101D*	N	4800	1.2	B.6	SPEED TRANSMITTER	107E5194/0	340
1506	B31-ST101J*	N	4800	1.2	C.2	SPEED TRANSMITTER	107E5194/0	340
1507	B31-VBT100D*	N	4800	1.2	B.6	VIBRATION TRANSMITTER	107E5194/0	340
1508	B31-VBT100J*	N	4800	1.2	C.2	VIBRATION TRANSMITTER	107E5194/0	340
1509	B31-VBT101D*	N	4800	1.2	B.6	VIBRATION TRANSMITTER	107E5194/0	340
1510	B31-VBT101J*	N	4800	1.2	C.2	VIBRATION TRANSMITTER	107E5194/0	340
1511	C81-C001D	N	4800	1.2	B.6	ADJ SPEED DRIVE-RIP D	299X701-146/0	340
1512	C81-C001J	N	4800	1.2	C.2	ADJ SPEED DRIVE-RIP J	299X701-146/0	340
1513	R10-C001D*	N	4800	1.2	B.2	RIP ASD OUTPUT XFMR	----?----	340
1514	C61-P001A	1	4800	1.1	A.3	RSS PANEL DIV. 1	299X700-060/0	341
1515	G31-DPI102A	N	4800	2.6	B.5	DIFF PRESS SWITCH	107E5051/0	344
1516	G31-DPI102B	N	4800	2.4	B.5	DIFF PRESS SWITCH	107E5051/0	344
1517	G31-DPI103A	N	4800	2.6	B.5	DIFF PRESS INDICATOR	107E5051/0	344
1518	G31-DPI103B	N	4800	2.4	B.5	DIFF PRESS INDICATOR	107E5051/0	344
1519	G31-DPS102A	N	4800	2.6	B.5	DIFF PRESS SWITCH	107E5051/0	344
1520	G31-DPS102B	N	4800	2.4	B.5	DIFF PRESS SWITCH	107E5051/0	344
1521	G31-DPS103A	N	4800	2.6	B.5	DIFF PRESS INDICATOR	107E5051/0	344
1522	G31-DPS103B	N	4800	2.4	B.5	DIFF PRESS INDICATOR	107E5051/0	344
1523	G31-DPT102A	N	4800	2.6	B.5	DIFF PRESS TRANS	107E5051/0	344
1524	G31-DPT102B	N	4800	2.4	B.5	DIFF PRESS TRANS	107E5051/0	344
1525	G31-DPT103A	N	4800	2.6	B.5	DIFF PRESS TRANS	107E5051/0	344
1526	G31-DPT103B	N	4800	2.4	B.5	DIFF PRESS TRANS	107E5051/0	344
1527	G31-E/P605A	N	4800	2.6	B.5	E/P TRANSDUCER	107E5051/0	344
1528	G31-E/P605B	N	4800	2.4	B.5	E/P TRANSDUCER	107E5051/0	344

Table 9A.6-2 Fire Hazard Analysis Equipment Database Sorted by Room — Reactor Building (Continued)

Item No.	MPL No	Elect Div.	Elev. Location	Location Number Coord.	Location Alpha Coord.	Description	System Drawing	Room No.
1529	G31-FIC104A	N	4800	2.6	B.5	FLOW IND CONTROLLER	107E5051/0	344
1530	G31-FIC104B	N	4800	2.4	B.5	FLOW IND CONTROLLER	107E5051/0	344
1531	G31-FS104A	N	4800	2.6	B.5	FLOW SWITCH	107E5051/0	344
1532	G31-FS104B	N	4800	2.4	B.5	FLOW SWITCH	107E5051/0	344
1533	G31-FT011A	N	4800	2.6	B.5	FLOW TRANSMITTER	107E5051/0	344
1534	G31-FT011B	N	4800	2.4	B.5	FLOW TRANSMITTER	107E5051/0	344
1535	G31-FT104A	N	4800	2.6	B.5	FLOW TRANSMITTER	107E5051/0	344
1536	G31-FT104B	N	4800	2.4	B.5	FLOW TRANSMITTER	107E5051/0	344
1537	G31-F/P104A	N	4800	2.6	B.5	E/P TRANSDUCER	107E5051/0	344
1538	G31-F/P104B	N	4800	2.4	B.5	E/P TRANSDUCER	107E5051/0	344
1539	G31-I/O102A	N	4800	2.6	B.5	I/O UNIT	107E5051/0	344
1540	G31-I/O102B	N	4800	2.4	B.5	I/O UNIT	107E5051/0	344
1541	G31-SQ104A	N	4800	2.6	B.5	SQRT CONVERTER	107E5051/0	344
1542	G31-SQ104B	N	4800	2.4	B.5	SQRT CONVERTER	107E5051/0	344
1543	G31-TS105A	N	4800	2.6	B.5	TEMP SWITCH	107E5051/0	344
1544	G31-TS105B	N	4800	2.4	B.5	TEMP SWITCH	107E5051/0	344
1545	G31-TT605A	N	4800	2.6	B.5	TEMP TRANSMITTER	107E5051/0	344
1546	G31-TT605B	N	4800	2.4	B.5	TEMP TRANSMITTER	107E5051/0	344
1547	G41-CE016A	N	4800	2.2	B.5	CONDUCTIVITY ELEMENT	107E6042/0	344
1548	G41-CE016B	N	4800	2.1	B.5	CONDUCTIVITY ELEMENT	107E6042/0	344
1549	G41-CIS016A	N	4800	2.2	B.5	CONDUCTIVITY INDICATOR	107E6042/0	344
1550	G41-CIS016B	N	4800	2.0	B.5	CONDUCTIVITY INDICATOR	107E6042/0	344
1551	G41-CT016A	N	4800	2.2	B.5	CONDUCTIVITY TRANSMITTER	107E6042/0	344
1552	G41-CT016B	N	4800	2.0	B.5	CONDUCTIVITY TRANSMITTER	107E6042/0	344
1553	G41-D001A	N	4800	2.2	B.5	FILTER/DEMIN	107E6042/0	344
1554	G41-D001B	N	4800	2.1	B.5	FILTER/DEMIN	107E6042/0	344
1555	G41-DPI009A	N	4800	2.2	B.5	DIFF PRESS INDICATOR	107E6042/0	344
1556	G41-DPI009B	N	4800	2.1	B.5	DIFF PRESS INDICATOR	107E6042/0	344
1557	G41-DPI016A	N	4800	2.2	B.5	DIFF PRESS INDICATOR	107E6042/0	344
1558	G41-DPI016B	N	4800	2.1	B.5	DIFF PRESS INDICATOR	107E6042/0	344
1559	G41-DPS009A	N	4800	2.2	B.5	DIFF PRESS SWITCH	107E6042/0	344
1560	G41-DPS009B	N	4800	2.1	B.5	DIFF PRESS SWITCH	107E6042/0	344

Table 9A.6-2 Fire Hazard Analysis Equipment Database Sorted by Room — Reactor Building (Continued)

Item No.	MPL No	Elect Div.	Elev. Location	Location Number Coord.	Location Alpha Coord.	Description	System Drawing	Room No.
1561	G41-DPS016A	N	4800	2.2	B.5	DIFF PRESS SWITCH	107E6042/0	344
1562	G41-DPS016B	N	4800	2.1	B.5	DIFF PRESS SWITCH	107E6042/0	344
1563	G41-DPT009A	N	4800	2.2	B.5	DIFF PRESS TRANS	107E6042/0	344
1564	G41-DPT009B	N	4800	2.1	B.5	DIFF PRESS TRANS	107E6042/0	344
1565	G41-DPT016A	N	4800	2.2	B.5	DIFF PRESS TRANS	107E6042/0	344
1566	G41-DPT016B	N	4800	2.1	B.5	DIFF PRESS TRANS	107E6042/0	344
1567	G41-E/P011A	N	4800	2.2	B.5	E/P CONVERTER	107E6042/0	344
1568	G41-E/P011B	N	4800	2.1	B.5	E/P CONVERTER	107E6042/0	344
1569	G41-FIC011A	N	4800	2.2	B.5	FLOW IND CONTROLLER	107E6042/0	344
1570	G41-FIC011B	N	4800	2.1	B.5	FLOW IND CONTROLLER	107E6042/0	344
1571	G41-FR011	N	4800	2.2	B.5	FLOW RECORDER	107E6042/0	344
1572	G41-FS011A	N	4800	2.2	B.5	FLOW SWITCH	107E6042/0	344
1573	G41-FS011B	N	4800	2.1	B.5	FLOW SWITCH	107E6042/0	344
1574	G41-FT011A	N	4800	2.2	B.5	FLOW TRANSMITTER	107E6042/0	344
1575	G41-FT011B	N	4800	2.1	B.5	FLOW TRANSMITTER	107E6042/0	344
1576	G41-SQ011A	N	4800	2.2	B.5	SQRT CONVERTER	107E6042/0	344
1577	G41-SQ011B	N	4800	2.1	B.5	SQRT CONVERTER	107E6042/0	344
1578	H22-P027*	N	4800	2.2	B.5	FPC F/D INSTR RACK A	10Q273-282	344
1579	H22-P028*	N	4800	2.0	B.5	FPC F/D INSTR RACK B	10Q273-282	344
1580	H22-P029*	N	4800	2.6	B.5	CUW/FD INSTR RACK A	10Q273-282	344
1581	H22-P030*	N	4800	2.4	B.5	CUW/FD INSTR RACK B	10Q273-282	344
1582	H22-P016*	N	4800	2.1	B.7	FPC FD SAMPL TRANSMITTER	10Q273-282	344
1583	C31-FT403D	N	4800	2.0	C.3	FLOW TRANSMITTER	796E361	344
1584	C31-FT404D	N	4800	2.0	C.3	FLOW TRANSMITTER	796E361	344
1585	B21-LT001D	4	4800	2.0	C.8	LEVEL TRANSMITTER	103E1791/1	345
1586	B21-LT003D	4	4800	2.0	C.8	LEVEL TRANSMITTER	103E1791/1	345
1587	B21-LT003H	4	4800	2.0	C.8	LEVEL TRANSMITTER	103E1791/1	345
1588	B21-PT007D	4	4800	2.0	C.8	PRESS TRANSMITTER	103E1791/1	345
1589	B21-PT025D	4	4800	2.0	C.8	PRESS TRANSMITTER	103E1791/1	345
1590	H22-P013D*	4	4800	2.0	C.6	REA SYS INSTR RACK D	10Q273-282	345
1591	E31-DPT006D	4	4800	2.1	C.7	RCIC STM FLOW XMTR	103E1792/1	345
1592	E31-DPT013D	4	4800	2.1	C.7	CUW SUC FLOW XMTR	103E1792/1	345
1593	E31-DPT014D	4	4800	2.1	C.7	CUW RET FLOW XMTR	103E1792/1	345
1594	E31-DPT015D	4	4800	2.1	C.7	CUW B/D FLOW XMTR	103E1792/1	345

Table 9A.6-2 Fire Hazard Analysis Equipment Database Sorted by Room — Reactor Building (Continued)

Item No.	MPL No	Elect Div.	Elev. Location	Location Number Coord.	Location Alpha Coord.	Description	System Drawing	Room No.
1595	E31-DPT016D	4	4800	2.1	C.7	MSL FLOW XMTR	103E1792/1	345
1596	E31-DPT016H	4	4800	2.1	C.7	MSL FLOW XMTR	103E1792/1	345
1597	E31-DPT016M	4	4800	2.1	C.7	MSL FLOW XMTR	103E1792/1	345
1598	E31-DPT016S	4	4800	2.1	C.7	MSL FLOW XMTR	103E1792/1	345
1599	E31-PT007D	4	4800	2.1	C.7	RCIC STM PRESS XMTR	103E1792/1	345
1600	H22-P014D*	4	4800	2.1	C.5	MAIN STM FLOW INST RACK D	10Q273-282	345
1601	H22-P015D*	4	4800	2.1	C.3	LEAK DET SYS INST RACK D	10Q273-282	345
1602	H22-P017*	N	4800	2.2	C.7	FPC FD MAIN VLV RACK	10Q273-282	345
1603	H22-P018*	N	4800	2.2	C.5	FPC FD COND MTR RACK	10Q273-282	345
1604	H22-P019*	N	4800	2.2	C.2	FPC FD SAMPLING HOOD	10Q273-282	345
1605	R46-CVCF D11	4	4800	2.1	C.7	VITAL D4 120 VAC - R/B	107E5076/0	345
1606	G31-D009A	N	4800	2.6	B.2	FILTER/DEMIN	107E5051/0	347
1607	G31-D009B	N	4800	2.2	B.2	FILTER/DEMIN	107E5051/0	347
1608	H22-P020*	N	8000	2.6	B.5	LIQ SMPL COOLER RACK,P91	NT-1006644	349
1609	H22-P021*	N	8000	2.3	B.6	LIQ SMPL PRESS CONT,P91	NT-1006644	349
1610	H22-P022*	N	8000	2.1	B.5	REA WATER pH MTR RACK,P91	NT-1006644	349
1611	H22-P023*	N	8000	2.1	B.7	REA DISOL OXYGEN MTR,P91	NT-1006644	349
1612	H22-P024*	N	8000	2.4	B.7	REA WATER COND RACK, P91	NT-1006644	349
1613	H22-P026*	N	8000	2.2	B.5	PAS RELATED AO VLV RACK	10Q273-282	349
1614	P91-P022*	N	8000	2.3	B.8	REA COOLANT SMPL TRANS PNL	NT-5000390	349
1615	H22-P025A*	N	8000	2.1	C.8	REA WATER SMPL HOOD,P91	NT-1006644	380
1616	H22-P025*	N	8000	2.1	C.5	REA WATER GRAB SMPL RK,P91	NT-1006644	380
1617	H23-P011*	4	4800	1.7	A.1	MULTIPLEXER	----?----	381
1618	R42-DC D10	4	4800	1.7	A.1	125 VDC INSTR DIST PNL	107E5075/0	381
1619	C61-P001B	2	4800	1.1	A.7	RSS PANEL DIV. 2	299X700-060/0	383
1620	B21-TE021A	1	4800	5.0	C.0	TEMP ELEMENT	103E1791/1	390
1621	B21-TE021B	2	4800	3.0	E.0	TEMP ELEMENT	103E1791/1	390

Table 9A.6-2 Fire Hazard Analysis Equipment Database Sorted by Room — Reactor Building (Continued)

Item No.	MPL No	Elect Div.	Elev. Location	Location Number Coord.	Location Alpha Coord.	Description	System Drawing	Room No.
1622	B21-TE023A	1	4800	5.0	C.0	TEMP ELEMENT	103E1791/1	390
1623	B21-TE023B	2	4800	3.0	E.0	TEMP ELEMENT	103E1791/1	390
1624	D23-RE006A	1	6000	4.5	B.5	GAMMA DETECTOR	107E5139/1	390
1625	D23-RE006B	2	6000	2.8	E.1	GAMMA DETECTOR	107E5139/1	390
1626	T31-F044A	N	6500	4.0	B.7	AO VALVE	107E6043/0	390
1627	T31-F044B	N	6500	5.4	D.0	AO VALVE	107E6043/0	390
1628	T31-F044C	N	6500	4.0	E.5	AO VALVE	107E6043/0	390
1629	T31-F044D	N	6500	2.7	D.0	AO VALVE	107E6043/0	390
1630	T31-F044E	N	6500	5.1	C.1	AO VALVE	107E6043/0	390
1631	T31-F044F	N	6500	5.0	E.0	AO VALVE	107E6043/0	390
1632	T31-F044G	N	6500	3.0	E.0	AO VALVE	107E6043/0	390
1633	T31-F044H	N	6500	3.0	C.0	AO VALVE	107E6043/0	390
1634	T31-TE051M	N	8500	5.1	B.9	TEMP ELEMENT	107E6043/0	390
1635	T31-TE051P	N	9000	2.6	D.8	TEMP ELEMENT	107E6043/0	390
1636	T31-TE051R	N	9000	2.6	D.8	TEMP ELEMENT	107E6043/0	390
1637	T31-TE051S	N	9000	2.6	D.8	TEMP ELEMENT	107E6043/0	390
1638	T31-TE052S	N	6000	5.1	E.1	TEMP ELEMENT	107E6043/0	390
1639	T31-TE052T	N	6000	2.8	B.9	TEMP ELEMENT	107E6043/0	390
1640	B21-TE014A	1	4950	3.6	C.5	TEMP ELEMENT	103E1791/1	391
1641	B21-TE014C	2	4950	3.7	D.4	TEMP ELEMENT	103E1791/1	391
1642	B31-TE303A	N	4800	3.5	C.6	TEMP ELEMENT	107E5194/0	391
1643	B31-TE303B	N	4800	3.5	C.6	TEMP ELEMENT	107E5194/0	391
1644	T31-TE052J	N	8500	4.0	C.5	TEMP ELEMENT	107E6043/0	391
1645	T31-TE052K	N	8500	4.4	C.8	TEMP ELEMENT	107E6043/0	391
1646	T31-TE052L	N	8500	4.3	D.3	TEMP ELEMENT	107E6043/0	391
1647	T31-TE052M	N	8500	3.7	D.3	TEMP ELEMENT	107E6043/0	391
1648	T31-TE052N	N	8500	3.6	C.8	TEMP ELEMENT	107E6043/0	391
1649	D11-E/O-1*	1	12300	5.2	A.5	MSL E/O CONVERTER	107E6071/0	410
1650	D11-E/O-2*	2	12300	5.2	A.5	MSL E/O CONVERTER	107E6071/0	410
1651	D11-E/O-3*	3	12300	5.2	A.5	MSL E/O CONVERTER	107E6071/0	410
1652	D11-E/O-4*	4	12300	5.2	A.5	MSL E/O CONVERTER	107E6071/0	410
1653	H22-P040*	N	12300	5.1	A.8	REA CONT VES	----?----	410
1654	P91-P024*	N	12300	5.1	A.8	PCV DEW PT MTR RACK	NT-5000390	410
1655	H23-P026*	N	12300	5.7	B.2	MULTIPLEXER	----?----	410

Table 9A.6-2 Fire Hazard Analysis Equipment Database Sorted by Room — Reactor Building (Continued)

Item No.	MPL No	Elect Div.	Elev. Location	Location Number Coord.	Location Alpha Coord.	Description	System Drawing	Room No.
1656	G31-F702A	N	13500	5.4	B.6	INSTR CHECK VALVE	107E5051/0	411
1657	G31-F703A	N	13500	5.4	B.6	INSTR CHECK VALVE	107E5051/0	411
1658	X-103A	1	16400	5.3	B.5	COMPENSATION/INSTR LINE	107E6043/0	411
1659	X-130A	1	13500	5.4	B.6	MAIN STEAM FLOW RATE	795E877	411
1660	X-140A	N	13500	5.3	B.5	CUW FLOW RATE	10P142-078	411
1661	X-143A	1	14700	5.4	B.6	REA WATER LEV & PRESS	795E877	411
1662	X-144A	1	12650	5.4	B.6	REA WATER LEV & PRESS	795E877	411
1663	X-161A	1	14700	5.3	B.6	CAMS SAMPLING	10R281-431	411
1664	P21-F075A	1	13550	5.2	B.4	MO GATE VALVE (ISO)	107E5112/0	411
1665	P21-F081A	1	13550	5.2	B.4	MO GATE VALVE (ISO)	107E5112/0	411
1666	X-061	1	13550	5.2	B.4	RCW A RIP CLG SUPPLY	107E5112	411
1667	X-062	1	13550	5.2	B.3	RCW A RIP CLG RETURN	107E5112	411
1668	C51-K002A	1	13500	5.5	B.7	SRNM PREAMPLIFIER	107E5074/0	411
1669	C51-K002E	1	13500	5.5	B.7	SRNM PREAMPLIFIER	107E5074/0	411
1670	C51-K002J	1	13500	5.5	B.7	SRNM PREAMPLIFIER	107E5074/0	411
1671	X-100A	N	13500	5.5	B.7	INTERNAL PUMP POWER	795E882	411
1672	X-102A	1	16400	5.5	B.7	CONTROL & INSTRUMENT	795E898	411
1673	X-102E	1	16400	5.5	B.7	CONTROL & INSTRUMENT	795E898	411
1674	X-105A	1	13500	5.6	B.7	NEUTRON DETECTOR	795E898	411
1675	T31-E/P018	N	13700	5.8	C.3	E/P TRANSDUCER	107E6043/0	411
1676	T31-F002	2	13700	5.8	C.2	AO VALVE	107E6043/0	411
1677	T31-F025	1	13700	5.8	C.2	AO VALVE	107E6043/0	411
1678	T31-F039	1	13700	5.8	C.2	AO VALVE	107E6043/0	411
1679	T31-F040	2	13700	5.8	C.2	AO VALVE	107E6043/0	411
1680	T31-F041	2	13700	5.8	C.2	AO VALVE	107E6043/0	411
1681	T31-FT001	N	13700	5.8	C.2	FLOW TRANSMITTER	107E6043/0	411
1682	T31-FT014	N	13700	5.8	C.2	FLOW TRANSMITTER	107E6043/0	411
1683	T31-PI013	N	13700	5.8	C.2	PRESSURE INDICATOR	107E6043/0	411
1684	T31-PT009	N	13700	5.8	C.2	PRESSURE TRANSMITTER	107E6043/0	411
1685	T31-TE002	N	13700	5.8	C.2	TEMP ELEMENT	107E6043/0	411
1686	T31-TE033	N	13700	5.8	C.2	TEMP ELEMENT	107E6043/0	411
1687	T31-TI002	N	13700	5.8	C.2	TEMP INDICATOR	107E6043/0	411

Table 9A.6-2 Fire Hazard Analysis Equipment Database Sorted by Room — Reactor Building (Continued)

Item No.	MPL No	Elect Div.	Elev. Location	Location Number Coord.	Location Alpha Coord.	Description	System Drawing	Room No.
1688	T31-TIC033	N	13700	5.8	C.2	TEMP IND/CONTROLLER	107E6043/0	411
1689	T31-TIS031	N	13700	5.8	C.3	TEMP IND SWITCH	107E6043/0	411
1690	T31-TIS032	N	13700	5.8	C.3	TEMP IND SWITCH	107E6043/0	411
1691	X-080	N	13700	5.8	C.2	DRYWELL PURGE SUCTION	107E6043/0	411
1692	X-141A	1	13500	5.8	C.2	RCIC BREAK DETEC.LINE A&C	----?----	411
1693	R43-A401A*	1	12300	6.2	A.4	LUBE OIL SUPPLY TANK	H:87-1137	412
1694	R43-A501A*	1	17300	6.9	A.7	EXPANSION TANK	H:87-1137	412
1695	R43-B003A*	1	12300	6.9	A.8	JACKET WATER COOLER	SSAR FIG 9.5-7	412
1696	R43-C013A*	1	12300	6.1	A.1	FUEL OIL DRAIN UNIT	H:87-1137	412
1697	R43-C401A*	1	12300	6.1	A.6	DG A LUBE OIL PUMP	SSAR FIG 9.5-9	412
1698	P21-DPS033A	1	12300	6.5	B.0	DP SW (EMER DG A)	107E5112/0	412
1699	P21-DPS034A	1	12300	6.5	B.0	DP SW (EMER DG A)	107E5112/0	412
1700	R43-A104A*	1	12300	6.2	B.7	AIR STORAGE	SSAR FIG 9.5-8	412
1701	R43-A204A*	1	12300	6.2	B.5	AIR STORAGE	SSAR FIG 9.5-8	412
1702	R43-DPS091A*	1	12300	6.9	B.6	DIFF PRESS SWITCH	H:87-1137	412
1703	R43-J001A	1	12300	6.6	B.0	DIESEL GENERATOR	796E301	412
1704	R43-LIS191A*	1	12300	6.7	B.2	LEVEL IND SWITCH	H:87-1137	412
1705	R43-LS142A*	1	12300	6.7	B.2	LEVEL SWITCH	SSAR FIG 9.5-6	412
1706	R43-B003C*	3	12300	6.9	E.1	JACKET WATER COOLER	SSAR FIG 9.5-7	413
1707	R43-P003A*	1	13300	6.9	B.9	DG(A) CONTROL PNL (B)	----?----	412
1708	R43-P003C*	3	13300	6.9	E.2	DG(C) CONTROL PNL (B)	----?----	432
1709	E11-F011A	2	14550	6.0	C.5	MO GATE VALVE (ISOL)	103E1797/1	414
1710	E51-F036	2	14450	6.0	C.8	MO GATE VALVE (ST SUP)	103E1795/1	414
1711	T31-F735A	1	14500	6.0	C.5	SO VALVE	107E6043/0	414
1712	T31-F803A	1	14000	6.0	C.5	SO VALVE	107E6043/0	414
1713	T31-LT100A	1	16000	6.0	C.5	LEVEL TRANSMITTER	107E6043/0	414
1714	X-033A	1	14550	5.9	C.6	RHR A SHTDN CLG SUCT	795E880/3	414
1715	X-037	1	14450	5.9	C.8	RCIC STEAM SUPPLY	795E883/4	414
1716	X-066	N	13550	2.8	E.7	HNCW DW CLG RETURN	107E5176	420
1717	P24-F053	1	13550	2.7	E.5	MO GATE VALVE (DW ISO)	107E5176/0	420
1718	P24-F142	1	13550	2.8	E.6	MO GATE VALVE (DW ISO)	107E5176/0	420
1719	X-065	N	13550	2.7	E.5	HNCW DW CLG SUPPLY	107E5176	420
1720	D21-RE014	N	12300	2.8	F.3	AREA RAD DETECTOR	299X701-171/0	420

Table 9A.6-2 Fire Hazard Analysis Equipment Database Sorted by Room — Reactor Building (Continued)

Item No.	MPL No	Elect Div.	Elev. Location	Location Number Coord.	Location Alpha Coord.	Description	System Drawing	Room No.
1721	P21-F075B	1	13550	2.5	E.3	MO GATE VALVE (ISO)	107E5112/0	420
1722	X-063	2	13550	2.4	E.3	RCW B RIP CLG SUPPLY	107E5112	420
1723	X-130B	2	13500	2.4	E.3	MAIN STEAM FLOW RATE	795E877	420
1724	X-143B	2	14700	2.4	E.3	REA WATER LEV & PRESS	795E877	420
1725	X-144B	2	12650	2.4	E.3	REA WATER LEV & PRESS	795E877	420
1726	X-064	2	13550	2.5	E.4	RCW B RIP CLG RETURN	107E5112	420
1727	P21-F081B	1	13550	2.6	E.4	MO GATE VALVE (ISO)	107E5112/0	420
1728	E11-F005B	2	14500	2.1	D.6	MO GATE VALVE (INJ)	103E1797/1	421
1729	E11-F011B	3	14550	2.0	D.2	MO GATE VALVE (ISOL)	103E1797/1	421
1730	E11-F017B	2	14500	2.0	D.8	MO GLOBE VALVE (SPRAY)	103E1797/1	421
1731	E11-F018B	2	14500	2.2	D.8	MO GLOBE VALVE (SPRAY)	103E1797/1	421
1732	E22-F003B	2	14500	2.0	D.4	MO GATE VALVE (INJ)	107E6008/0	421
1733	T31-F735B	2	14500	2.0	D.5	SO VALVE	107E6043/0	421
1734	T31-F803B	2	14000	2.0	D.5	SO VALVE	107E6043/0	421
1735	T31-LT100B	2	16000	2.0	D.5	LEVEL TRANSMITTER	107E6043/0	421
1736	X-030A	2	14500	2.2	D.8	RHR B DRYWELL SPRAY	795E880/3	421
1737	X-031A	2	14500	2.1	D.3	HPCF B SUPPLY	795E876/4	421
1738	X-032A	2	14500	2.2	D.7	RHR B LPCF	795E880/3	421
1739	X-033B	2	14550	2.1	D.2	RHR B SHTDN CLG SUCT	795E880/3	421
1740	R43-P003B*	2	14400	1.2	E.2	DG(B) CONTROL PNL (B)	----?----	423
1741	P21-DPS033B	2	12300	1.5	F.0	DP SW (EMER DG B)	107E5112/0	423
1742	P21-DPS034B	2	12300	1.5	F.0	DP SW (EMER DG B)	107E5112/0	423
1743	R43-A104B*	2	12300	1.1	F.9	AIR STORAGE	SSAR FIG 9.5-8	423
1744	R43-A204B*	2	12300	1.1	E.7	AIR STORAGE	SSAR FIG 9.5-8	423
1745	R43-A401B*	2	12300	1.1	E.7	LUBE OIL SUPPLY TANK	H:87-1137	423
1746	R43-A501B*	2	17300	1.1	F.4	EXPANSION TANK	H:87-1137	423
1747	R43-B003B*	2	12300	1.9	E.7	JACKET WATER COOLER	SSAR FIG 9.5-7	423
1748	R43-C013B*	2	12300	1.1	E.4	FUEL OIL DRAIN UNIT	H:87-1137	423
1749	R43-C401B*	2	12300	1.1	E.9	DG B LUBE OIL PUMP	SSAR FIG 9.5-9	423
1750	R43-DPS091B*	2	12300	1.1	E.4	DIFF PRESS SWITCH	H:87-1137	423
1751	R43-J001B	2	12300	1.5	F.0	DIESEL GENERATOR	796E301	423
1752	R43-LIS191B*	2	12300	1.3	F.0	LEVEL IND SWITCH	H:87-1137	423
1753	R43-LS142B*	2	12300	1.3	F.0	LEVEL SWITCH	SSAR FIG 9.5-6	423

Table 9A.6-2 Fire Hazard Analysis Equipment Database Sorted by Room — Reactor Building (Continued)

Item No.	MPL No	Elect Div.	Elev. Location	Location Number Coord.	Location Alpha Coord.	Description	System Drawing	Room No.
1754	C51-K002B	2	13500	3.7	E.8	SRNM PREAMPLIFIER	107E5074/0	424
1755	C51-K002F	2	13500	3.7	E.8	SRNM PREAMPLIFIER	107E5074/0	424
1756	X-100B	N	13500	3.7	E.8	INTERNAL PUMP POWER	795E882	424
1757	X-102B	2	16400	3.8	E.9	CONTROL & INSTRUMENT	795E898	424
1758	X-102F	2	16400	3.7	E.8	CONTROL & INSTRUMENT	795E898	424
1759	X-103B	2	13500	3.9	E.9	COMPENSATION/INSTR LINE	107E6043/0	424
1760	X-105B	2	13500	3.8	E.8	NEUTRON DETECTOR	795E898	424
1761	T49-A001B	2	12300	3.1	F.7	RECOMBINER	107E6047/0	425
1762	T49-B001B	2	12300	3.1	F.7	SPRAY COOLER	107E6047/0	425
1763	T49-C001B	2	12300	3.1	F.7	BLOWER	107E6047/0	425
1764	T49-D001B	2	12300	3.1	F.7	WATER SEPARATOR	107E6047/0	425
1765	T49-D002B*	2	12300	3.1	F.7	RECOMB HEATER	107E6047/0	425
1766	T49-F003B	2	12300	3.1	F.7	MO GLOBE VALVE	107E6047/0	425
1767	T49-F004B	2	12300	3.1	F.7	MO GLOBE VALVE	107E6047/0	425
1768	T49-F008B	2	12300	3.1	F.6	MO GLOBE VALVE	107E6047/0	425
1769	T49-F009B	2	12300	3.1	F.7	MAN OPER GLOBE VALVE	107E6047/0	425
1770	T49-F010B	2	12300	3.1	F.7	MO GLOBE VALVE	107E6047/0	425
1771	T49-F013B	2	12300	3.1	F.7	MAN OPER GATE VALVE	107E6047/0	425
1772	T49-F014B	2	12300	3.1	F.7	MAN OPER GATE VALVE	107E6047/0	425
1773	T49-F016B	2	12300	3.1	F.7	MAN OPER GATE VALVE	107E6047/0	425
1774	T49-FT002B	2	12300	3.1	F.7	FLOW TRANSMITTER	107E6047/0	425
1775	T49-FT004B	2	12300	3.1	F.7	FLOW TRANSMITTER	107E6047/0	425
1776	T49-LS011B	2	12300	3.1	F.7	LEVEL SWITCH	107E6047/0	425
1777	T49-LS012B	2	12300	3.1	F.7	LEVEL SWITCH	107E6047/0	425
1778	T49-LS013B	2	12300	3.1	F.7	LEVEL SWITCH	107E6047/0	425
1779	T49-PT003B	2	12300	3.1	F.7	PRESS TRANSMITTER	107E6047/0	425
1780	T49-TE001B	2	12300	3.1	F.7	TEMP ELEMENT	107E6047/0	425
1781	T49-TE005B	2	12300	3.1	F.7	TEMP ELEMENT	107E6047/0	425
1782	T49-TE006B-1	2	12300	3.1	F.7	TEMP ELEMENT	107E6047/0	425
1783	T49-TE006B-2	2	12300	3.1	F.7	TEMP ELEMENT	107E6047/0	425
1784	T49-TE007B-1	2	12300	3.1	F.7	TEMP ELEMENT	107E6047/0	425
1785	T49-TE007B-2	2	12300	3.1	F.7	TEMP ELEMENT	107E6047/0	425

Table 9A.6-2 Fire Hazard Analysis Equipment Database Sorted by Room — Reactor Building (Continued)

Item No.	MPL No	Elect Div.	Elev. Location	Location Number Coord.	Location Alpha Coord.	Description	System Drawing	Room No.
1786	T49-TE008B-1	2	12300	3.1	F.7	TEMP ELEMENT	107E6047/0	425
1787	T49-TE008B-2	2	12300	3.1	F.7	TEMP ELEMENT	107E6047/0	425
1788	T49-TE009B-1	2	12300	3.1	F.7	TEMP ELEMENT	107E6047/0	425
1789	T49-TE009B-2	2	12300	3.1	F.7	TEMP ELEMENT	107E6047/0	425
1790	T49-TE010B-1	2	12300	3.1	F.7	TEMP ELEMENT	107E6047/0	425
1791	T49-TE010B-2	2	12300	3.1	F.7	TEMP ELEMENT	107E6047/0	425
1792	T49-TE011B	2	12300	3.1	F.7	TEMP ELEMENT	107E6047/0	425
1793	T49-TT609B	2	12300	3.1	F.7	TEMP TRANSMITTER	107E6047/0	425
1794	U41-D108	2	12300	2.7	F.5	FCS ROOM (B) HVH	107E5189/0	425
1795	H22-P039*	N	12300	5.2	E.6	CONT VESSEL PRESS LK TEST	----?----	430
1796	E11-F005C	3	14500	6.0	D.2	MO GATE VALVE (INJ)	103E1797/1	431
1797	E11-F011C	1	14550	5.9	D.6	MO GATE VALVE (ISOL)	103E1797/1	431
1798	E11-F017C	3	14500	5.9	D.8	MO GLOBE VALVE (SPRAY)	103E1797/1	431
1799	E11-F018C	3	14500	5.8	D.8	MO GLOBE VALVE (SPRAY)	103E1797/1	431
1800	E22-F003C	3	14500	6.0	D.4	MO GATE VALVE (INJ)	107E6008/0	431
1801	T31-F735C	3	14500	6.0	D.5	SO VALVE	107E6043/0	431
1802	X-030B	3	14500	5.8	D.8	RHR C DRYWELL SPRAY	795E880/3	431
1803	X-031B	3	14500	5.9	D.3	HPCF C SUPPLY	795E876/4	431
1804	X-032B	3	14500	5.9	D.2	RHR C LPCF	795E880/3	431
1805	X-033C	3	14550	5.8	D.7	RHR C SHTDN CLG SUCT	795E880/3	431
1806	P21-DPS033C	3	12300	6.5	F.0	DP SW (EMER DG C)	107E5112/0	432
1807	P21-DPS034C	3	12300	6.5	F.0	DP SW (EMER DG C)	107E5112/0	432
1808	R43-A104C*	3	12300	6.1	F.9	AIR STORAGE	SSAR FIG 9.5-8	432
1809	R43-A204C*	3	12300	6.1	F.7	AIR STORAGE	SSAR FIG 9.5-8	432
1810	R43-A401C*	3	12300	6.2	E.7	LUBE OIL SUPPLY TANK	H:87-1137	432
1811	R43-A501C*	3	17300	6.9	F.4	EXPANSION TANK	H:87-1137	432
1812	R43-C013C*	3	12300	6.1	E.4	FUEL OIL DRAIN UNIT	H:87-1137	432
1813	R43-C401C*	3	12300	6.1	E.9	DG C LUBE OIL PUMP	SSAR FIG 9.5-9	432
1814	R43-DPS091C*	3	12300	6.9	E.4	DIFF PRESS SWITCH	H:87-1137	432
1815	R43-J001C	3	12300	6.6	F.0	DIESEL GENERATOR	796E301	432
1816	R43-LIS191C*	3	12300	6.7	E.9	LEVEL IND SWITCH	H:87-1137	432
1817	R43-LS142C*	3	12300	6.2	F.4	LEVEL SWITCH	SSAR FIG 9.5-6	432

Table 9A.6-2 Fire Hazard Analysis Equipment Database Sorted by Room — Reactor Building (Continued)

Item No.	MPL No	Elect Div.	Elev. Location	Location Number Coord.	Location Alpha Coord.	Description	System Drawing	Room No.
1818	X-177	N	15900	5.4	E.3	PCV & D/F LEAK	----?----	433
1819	X-130C	3	13500	5.6	E.2	MAIN STEAM FLOW RATE	795E877	433
1820	X-143C	3	14700	5.6	E.2	REA WATER LEV & PRESS	795E877	433
1821	X-144C	3	12650	5.6	E.2	REA WATER LEV & PRESS	795E877	433
1822	C51-K002C	3	13500	4.7	E.8	SRNM PREAMPLIFIER	107E5074/0	435
1823	C51-K002G	3	13500	4.7	E.8	SRNM PREAMPLIFIER	107E5074/0	435
1824	C51-K002L	3	13500	4.7	E.8	SRNM PREAMPLIFIER	107E5074/0	435
1825	X-100C	N	13500	4.8	E.8	INTERNAL PUMP POWER	795E882	435
1826	X-100E	N	13500	4.2	E.8	INTERNAL PUMP POWER	795E882	435
1827	X-102C	3	16400	4.3	E.9	CONTROL & INSTRUMENT	795E898	435
1828	X-102G	3	13500	4.3	E.9	CONTROL & INSTRUMENT	795E898	435
1829	X-103C	3	16400	4.7	E.8	COMPENSATION/INSTR LINE	107E6043/0	435
1830	X-105C	3	13500	4.7	E.8	NEUTRON DETECTOR	795E898	435
1831	T49-A001A	3	12300	4.0	F.7	RECOMBINER	107E6047/0	436
1832	T49-B001A	3	12300	4.0	F.7	SPRAY COOLER	107E6047/0	436
1833	T49-C001A	3	12300	4.0	F.7	BLOWER	107E6047/0	436
1834	T49-D001A	3	12300	4.0	F.7	WATER SEPARATOR	107E6047/0	436
1835	T49-D002A*	3	12300	4.0	F.7	RECOMB HEATER	107E6047/0	436
1836	T49-F003A	3	12300	4.0	F.7	MO GLOBE VALVE	107E6047/0	436
1837	T49-F004A	3	12300	4.0	F.7	MO GLOBE VALVE	107E6047/0	436
1838	T49-F008A	3	12300	4.0	F.6	MO GLOBE VALVE	107E6047/0	436
1839	T49-F009A	3	12300	4.0	F.7	MAN OPER GLOBE VALVE	107E6047/0	436
1840	T49-F010A	3	12300	4.0	F.7	MO GLOBE VALVE	107E6047/0	436
1841	T49-F013A	3	12300	4.0	F.7	MAN OPER GATE VALVE	107E6047/0	436
1842	T49-F014A	3	12300	4.0	F.7	MAN OPER GATE VALVE	107E6047/0	436
1843	T49-F016A	3	12300	4.0	F.7	MAN OPER GATE VALVE	107E6047/0	436
1844	T49-FT002A	3	12300	4.0	F.7	FLOW TRANSMITTER	107E6047/0	436
1845	T49-FT004A	3	12300	4.0	F.7	FLOW TRANSMITTER	107E6047/0	436
1846	T49-LS011A	3	12300	4.0	F.7	LEVEL SWITCH	107E6047/0	436
1847	T49-LS012A	3	12300	4.0	F.7	LEVEL SWITCH	107E6047/0	436
1848	T49-LS013A	3	12300	4.0	F.7	LEVEL SWITCH	107E6047/0	436
1849	T49-PT003A	3	12300	4.0	F.7	PRESS TRANSMITTER	107E6047/0	436

Table 9A.6-2 Fire Hazard Analysis Equipment Database Sorted by Room — Reactor Building (Continued)

Item No.	MPL No	Elect Div.	Elev. Location	Location Number Coord.	Location Alpha Coord.	Description	System Drawing	Room No.
1850	T49-TE001A	3	12300	4.0	F.7	TEMP ELEMENT	107E6047/0	436
1851	T49-TE005A	3	12300	4.0	F.7	TEMP ELEMENT	107E6047/0	436
1852	T49-TE006A-1	3	12300	4.0	F.7	TEMP ELEMENT	107E6047/0	436
1853	T49-TE006A-2	3	12300	4.0	F.7	TEMP ELEMENT	107E6047/0	436
1854	T49-TE007A-1	3	12300	4.0	F.7	TEMP ELEMENT	107E6047/0	436
1855	T49-TE007A-2	3	12300	4.0	F.7	TEMP ELEMENT	107E6047/0	436
1856	T49-TE008A-1	3	12300	4.0	F.7	TEMP ELEMENT	107E6047/0	436
1857	T49-TE008A-2	3	12300	4.0	F.7	TEMP ELEMENT	107E6047/0	436
1858	T49-TE009A-1	3	12300	4.0	F.7	TEMP ELEMENT	107E6047/0	436
1859	T49-TE009A-2	3	12300	4.0	F.7	TEMP ELEMENT	107E6047/0	436
1860	T49-TE010A-1	3	12300	4.0	F.7	TEMP ELEMENT	107E6047/0	436
1861	T49-TE010A-2	3	12300	4.0	F.7	TEMP ELEMENT	107E6047/0	436
1862	T49-TE011A	3	12300	4.0	F.7	TEMP ELEMENT	107E6047/0	436
1863	T49-TT609A	3	12300	4.0	F.7	TEMP TRANSMITTER	107E6047/0	436
1864	U41-D107	3	12300	4.6	F.9	FCS ROOM (C) HVH	107E5189/0	436
1865	B21-F001A	N	12300	4.3	A.2	MO GATE VALVE (FW)	103E1791/1	440
1866	B21-F001B	N	12300	3.7	A.2	MO GATE VALVE (FW)	103E1791/1	440
1867	B21-F003A	1	12300	4.3	A.9	AO CHECK VALVE	103E1791/1	440
1868	B21-F003B	2	12300	3.7	A.9	AO CHECK VALVE	103E1791/1	440
1869	B21-F007A	N	12300	3.5	B.0	MO GATE VALVE (CUWINJ)	103E1791/1	440
1870	B21-F007B	N	12300	4.5	B.0	MO GATE VALVE (CUWINJ)	103E1791/1	440
1871	B21-F009A	1	16300	4.2	B.0	NO GLOBE VALVE (MSIV)	103E1791/1	440
1872	B21-F009A	2	16300	4.2	B.0	NO GLOBE VALVE (MSIV)	103E1791/1	440
1873	B21-F009B	1	16300	4.6	B.0	NO GLOBE VALVE (MSIV)	103E1791/1	440
1874	B21-F009B	2	16300	4.6	B.0	NO GLOBE VALVE (MSIV)	103E1791/1	440
1875	B21-F009C	1	16300	3.4	B.0	NO GLOBE VALVE (MSIV)	103E1791/1	440
1876	B21-F009C	2	16300	3.4	B.0	NO GLOBE VALVE (MSIV)	103E1791/1	440
1877	B21-F009D	1	16300	3.8	B.0	NO GLOBE VALVE (MSIV)	103E1791/1	440
1878	B21-F009D	2	16300	3.8	B.0	NO GLOBE VALVE (MSIV)	103E1791/1	440
1879	B21-F012	2	12300	4.0	B.0	MO GLOBE VALVE (DR)	103E1791/1	440
1880	B21-F013	N	12300	4.0	B.0	MO GLOBE VALVE (DR)	103E1791/1	440
1881	B21-F014	N	12300	4.0	B.0	MO GLOBE VALVE (DR)	103E1791/1	440
1882	B21-F015	N	12300	4.0	B.0	AO GLOBE VALVE	103E1791/1	440

Table 9A.6-2 Fire Hazard Analysis Equipment Database Sorted by Room — Reactor Building (Continued)

Item No.	MPL No	Elect Div.	Elev. Location	Location Number Coord.	Location Alpha Coord.	Description	System Drawing	Room No.
1883	B21-F016	N	16450	4.0	B.0	MO GLOBE VALVE (DR)	103E1791/1	440
1884	B21-F017	N	16450	4.0	B.0	AO GLOBE VALVE	103E1791/1	440
1885	B21-F516	1	12300	4.0	B.0	MO GLOBE VALVE	103E1791/1	440
1886	B21-POSA1O	1	16300	4.2	B.0	POSITION SWITCH	103E1791/1	440
1887	B21-POSA2O	1	16300	4.2	B.0	POSITION SWITCH	103E1791/1	440
1888	B21-POSA3O	1	16300	4.2	B.0	POSITION SWITCH	103E1791/1	440
1889	B21-POSB1O	2	16300	4.6	B.0	POSITION SWITCH	103E1791/1	440
1890	B21-POSB2O	2	16300	4.6	B.0	POSITION SWITCH	103E1791/1	440
1891	B21-POSB3O	2	16300	4.6	B.0	POSITION SWITCH	103E1791/1	440
1892	B21-POSC1O	3	16300	3.4	B.0	POSITION SWITCH	103E1791/1	440
1893	B21-POSC2O	3	16300	3.4	B.0	POSITION SWITCH	103E1791/1	440
1894	B21-POSC3O	3	16300	3.4	B.0	POSITION SWITCH	103E1791/1	440
1895	B21-POSD1O	4	16300	3.8	B.0	POSITION SWITCH	103E1791/1	440
1896	B21-POSD2O	4	16300	3.8	B.0	POSITION SWITCH	103E1791/1	440
1897	B21-POSD3O	4	16300	3.8	B.0	POSITION SWITCH	103E1791/1	440
1898	B21-SS030	N	12300	4.0	B.0	TEMP SWITCH	103E1791/1	440
1899	B21-TE026	N	12300	4.2	A.5	TEMP ELEMENT	103E1791/1	440
1900	B21-TE030	N	12300	4.0	B.0	TEMP ELEMENT	103E1791/1	440
1901	B21-TE031	N	12300	4.0	B.0	TEMP ELEMENT	103E1791/1	440
1902	B21-TI030	N	12300	4.0	B.0	TEMP INDICATOR	103E1791/1	440
1903	D11-RE001A	1	17000	4.4	A.3	MSL DETECTOR	107E6071/0	440
1904	D11-RE001B	2	17000	3.6	A.3	MSL DETECTOR	107E6071/0	440
1905	D11-RE001C	3	17000	4.4	A.3	MSL DETECTOR	107E6071/0	440
1906	D11-RE001D	4	17000	3.6	A.3	MSL DETECTOR	107E6071/0	440
1907	E51-F004	1	12300	4.0	A.5	MO GATE VALVE (INJ)	103E1795/1	440
1908	E51-F005	1	12300	3.2	A.6	A0 CHECK VALVE	103E1795/1	440
1909	E51-F026	1	12300	3.2	A.6	AO GLOBE VALVE	103E1795/1	440
1910	X-010A	1	16300	4.2	B.2	MAIN STEAM SYSTEM	795E877	440
1911	X-010B	2	16300	4.5	B.2	MAIN STEAM SYSTEM	795E877	440
1912	X-010C	3	16300	3.5	B.2	MAIN STEAM SYSTEM	795E877	440
1913	X-010D	4	16300	3.8	B.2	MAIN STEAM SYSTEM	795E877	440
1914	X-011	1	13650	4.7	B.2	MAIN STEAM DRAIN	795E877	440
1915	X-012A	1	13810	4.3	B.2	FEEDWATER SYSTEM	795E877	440
1916	X-012B	2	13810	3.7	B.2	FEEDWATER SYSTEM	795E877	440

Table 9A.6-2 Fire Hazard Analysis Equipment Database Sorted by Room — Reactor Building (Continued)

Item No.	MPL No	Elect Div.	Elev. Location	Location Number Coord.	Location Alpha Coord.	Description	System Drawing	Room No.
1917	D11-RAM011A	N	12300	2.8	A.4	PRE-AMP,SBGT SYS EXH.	107E6071/0	441
1918	D11-RAM011B	N	12300	2.8	A.4	PRE-AMP,SBGT SYS EXH.	107E6071/0	441
1919	D11-RE011A	N	12300	2.8	A.4	SBGT EXH. SCINT. DET.	107E6071/0	441
1920	D11-RE011B	N	12300	2.8	A.4	SBGT EXH. SCINT. DET.	107E6071/0	441
1921	D11-RSM011A	N	12300	2.7	A.1	SBGT GAS SAMPLER PNL	107E6071/0	441
1922	D11-RSM011B	N	12300	2.7	A.2	SBGT GAS SAMPLER PNL	107E6071/0	441
1923	H21-P330	N	12300	2.8	A.4	D11,SBGT SMPL CONT PNL	107E6071/0	441
1924	H22-P031*	N	12300	2.7	A.1	SAMPLE HOLDING RACK, P91	NT-1006644	441
1925	H22-P032*	N	12300	2.7	A.4	PAS SAMPLING RACK, P91	NT-1006644	441
1926	H22-P033*	N	12300	2.8	A.4	PASS LOCAL CONTROL PNL	NT-1006644	441
1927	H22-P034*	N	12300	2.9	A.2	SBGT OG RAD MON SMPL RACK	----?----	441
1928	H22-P035*	N	12300	2.9	A.1	SBGT OG RAD MON GAS SMPL	----?----	441
1929	H22-P250	N	12300	2.8	A.4	D11,SBGT SMPL RACK	107E6071/0	441
1930	H22-P036*	N	12300	2.4	A.4	SBGT OG RAD MON GAS SMPL	----?----	442
1931	H22-P037*	N	12300	2.4	A.2	SBGT OG PARTI/IODINE SMPL	----?----	442
1932	H22-P038*	N	12300	2.4	A.2	SBGT OG PARTI/IODINE SMPL	----?----	442
1933	P91-A001*	N	12300	2.4	A.4	NITROGEN CYLINDER	NT-1006644	442
1934	G31-F003	1	14480	2.4	B.6	MO GATE VALVE (ISOL)	107E5051/0	443
1935	G31-F015	N	12300	2.5	B.6	MO GLOBE VALVE (FW)	107E5051/0	443
1936	G31-F016	N	14450	2.5	B.5	MO GATE VALVE (RX HD)	107E5051/0	443
1937	G31-F017	2	14450	2.5	B.6	MO GATE VALVE (ISOL)	107E5051/0	443
1938	G31-F022	N	12300	2.5	B.5	AO GLOBE VALVE	107E5051/0	443
1939	G31-F023	N	12300	2.5	B.5	MO GATE VALVE (LCWRET)	107E5051/0	443
1940	G31-F024	N	12300	2.5	B.5	MO GLOBE VALVE (PRET)	107E5051/0	443
1941	G31-F025	N	12300	2.5	B.6	MO GATE VALVE (PRET)	107E5051/0	443
1942	G31-F072	1	13500	2.3	B.6	AO VALVE	107E5051/0	443
1943	G31-POE019	N	12300	2.5	B.5	POSITION ELEMENT	107E5051/0	443
1944	G31-POI019	N	12300	2.5	B.5	POSITION ELEMENT	107E5051/0	443
1945	G31-PS018	N	12300	2.5	B.5	PRESS SWITCH	107E5051/0	443

Table 9A.6-2 Fire Hazard Analysis Equipment Database Sorted by Room — Reactor Building (Continued)

Item No.	MPL No	Elect Div.	Elev. Location	Location Number Coord.	Location Alpha Coord.	Description	System Drawing	Room No.
1946	G31-PS021	N	12300	2.5	B.5	PRESS SWITCH	107E5051/0	443
1947	G31-PS118	N	12300	2.5	B.6	PRESS SWITCH	107E5051/0	443
1948	K17-F004	1	16400	2.6	B.6	MO VALVE - LCW ISOL	103E1634/0	443
1949	K17-F104	1	16400	2.6	B.6	MO VALVE - HCW ISOL	103E1634/0	443
1950	K17-F107	N	12300	2.5	B.5	SO VALVE	103E1634/0	443
1951	K17-FT005	N	16400	2.6	B.6	FLOW TRANSMITTER	103E1634/0	443
1952	K17-FT105	N	12300	2.5	B.5	FLOW TRANSMITTER	103E1634/0	443
1953	K17-POS107*	N	12300	2.5	B.5	POSITION SWITCH	103E1634/0	443
1954	X-038	N	14450	2.6	B.6	RPV HEAD SPRAY	10P142-078	443
1955	X-050	N	14480	2.5	B.7	CUW PUMP SUCTION	10P142-078	443
1956	X-170	N	13500	2.5	B.7	REA WATER SAMPLING	----?----	443
1957	C41-F006A	1	12300	2.2	C.8	MO GLOBE VALVE (INJ)	107E6016/0	444
1958	C41-F006B	2	12300	2.2	C.8	MO GLOBE VALVE (INJ)	107E6016/0	444
1959	C51-K002D	4	13500	2.2	C.5	SRNM PREAMPLIFIER	107E5074/0	444
1960	C51-K002H	4	13500	2.2	C.5	SRNM PREAMPLIFIER	107E5074/0	444
1961	D23-RE005B	2	14700	2.1	C.7	GAMMA DETECTOR	107E5139/1	444
1962	T31-F735D	4	14500	2.1	C.5	SO VALVE	107E6043/0	444
1963	X-022	N	15250	2.2	C.8	STBY LIQ CONTROL SYS	NT-1006412	444
1964	X-060	N	13550	2.2	C.8	PURIF MU WTR SUPPLY	107E5111	444
1965	X-100D	N	13500	2.2	C.7	INTERNAL PUMP POWER	795E882	444
1966	X-102D	4	16100	2.1	C.7	CONTROL & INSTRUMENT	795E898	444
1967	X-105D	4	13500	2.2	C.5	NEUTRON DETECTOR	795E898	444
1968	X-130D	4	13500	2.3	C.2	MAIN STEAM FLOW RATE	795E877	444
1969	X-140B	N	13500	2.2	C.2	CUW FLOW RATE	10P142-078	444
1970	X-143D	4	14700	2.3	C.2	REA WATER LEV & PRESS	795E877	444
1971	X-144D	4	12650	2.3	C.2	REA WATER LEV & PRESS	795E877	444
1972	G31-F702B	N	13500	2.3	C.0	INSTR CHECK VALVE	107E5051/0	444
1973	G31-F703B	N	13500	2.3	C.0	INSTR CHECK VALVE	107E5051/0	444
1974	X-141B	4	13500	2.3	C.0	RCIC BREAK DETEC.LINE B&D	----?----	444
1975	X-161B	2	14700	2.3	C.0	CAMS SAMPLING	10R281-431	444
1976	D11-RAM041A	N	12300	1.2	B.4	PRE-AMP,STACK RAD MON A	107E6071/0	445
1977	D11-RAM041B	N	12300	1.2	B.4	PRE-AMP,STACK RAD MON B	107E6071/0	445

Table 9A.6-2 Fire Hazard Analysis Equipment Database Sorted by Room — Reactor Building (Continued)

Item No.	MPL No	Elect Div.	Elev. Location	Location Number Coord.	Location Alpha Coord.	Description	System Drawing	Room No.
1978	G31-F262	N	12300	1.1	B.9	AO BALL VALVE	107E5051/0	445
1979	G31-F265	N	12300	1.1	B.9	AO GLOBE VALVE	107E5051/0	445
1980	H21-P001	N	12300	1.2	B.8	CUW/FPC CONTROL PNL	----?----	445
1981	H21-P310	N	12300	1.2	B.4	D11,TRITIUM CONT.PNL.	107E6071/0	445
1982	H22-P253	N	12300	1.2	B.4	D11,TRITIUM SMPL RACK	107E6071/0	445
1983	G31-A001*	N	12300	2.1	A.2	PRECOAT TANK	107E5051/0	446
1984	G31-C003*	N	12300	1.8	A.2	CUW PRECOAT PUMP	107E5051/0	446
1985	G31-F213	N	12300	1.8	A.2	AO BALL VALVE	107E5051/0	446
1986	G31-F214	N	12300	1.8	A.2	AO BALL VALVE	107E5051/0	446
1987	G31-F221	N	12300	1.8	A.2	AO BALL VALVE	107E5051/0	446
1988	G31-F232	N	12300	1.8	A.2	AO BALL VALVE	107E5051/0	446
1989	G31-F233	N	12300	1.8	A.2	AO BALL VALVE	107E5051/0	446
1990	G31-F234	N	12300	1.8	A.2	AO GLOBE VALVE	107E5051/0	446
1991	G31-F242	N	12300	1.8	A.2	AO GLOBE VALVE	107E5051/0	446
1992	G31-LS113	N	12300	2.1	A.1	LEVEL SWITCH	107E5051/0	446
1993	G31-LT113	N	12300	2.1	A.1	LEVEL TRANSMITTER	107E5051/0	446
1994	G31-M001A*	N	12300	2.1	A.1	CUW PRECOAT TNK MIXR MTR	107E5051/0	446
1995	P91-C008	N	12300	1.3	A.2	SAMPLE PUMP	NT-1006644	446
1996	B21-A003A	1	16300	3.0	C.5	ACCUMULATOR	103E1791/1	491
1997	B21-A003A	2	16300	3.0	C.5	ACCUMULATOR	103E1791/1	491
1998	B21-A003C	1	16300	5.0	C.5	ACCUMULATOR	103E1791/1	491
1999	B21-A003C	2	16300	5.0	C.5	ACCUMULATOR	103E1791/1	491
2000	B21-A003F	1	16300	3.0	C.5	ACCUMULATOR	103E1791/1	491
2001	B21-A003F	2	16300	3.0	C.5	ACCUMULATOR	103E1791/1	491
2002	B21-A003H	1	16300	5.0	C.5	ACCUMULATOR	103E1791/1	491
2003	B21-A003H	2	16300	5.0	C.5	ACCUMULATOR	103E1791/1	491
2004	B21-A003L	1	16300	3.0	C.5	ACCUMULATOR	103E1791/1	491
2005	B21-A003L	2	16300	3.0	C.5	ACCUMULATOR	103E1791/1	491
2006	B21-A003N	1	16300	5.0	C.5	ACCUMULATOR	103E1791/1	491
2007	B21-A003N	2	16300	5.0	C.5	ACCUMULATOR	103E1791/1	491
2008	B21-A003R	1	16300	3.0	C.5	ACCUMULATOR	103E1791/1	491
2009	B21-A003R	2	16300	3.0	C.5	ACCUMULATOR	103E1791/1	491
2010	B21-A003T	1	16300	5.0	C.5	ACCUMULATOR	103E1791/1	491
2011	B21-A003T	2	16300	5.0	C.5	ACCUMULATOR	103E1791/1	491

Table 9A.6-2 Fire Hazard Analysis Equipment Database Sorted by Room — Reactor Building (Continued)

Item No.	MPL No	Elect Div.	Elev. Location	Location Number Coord.	Location Alpha Coord.	Description	System Drawing	Room No.
2012	B21-A004A	3	16300	3.0	C.5	ACCUMULATOR	103E1791/1	491
2013	B21-A004B	1	16300	3.0	C.5	ACCUMULATOR	103E1791/1	491
2014	B21-A004C	4	16300	5.0	C.5	ACCUMULATOR	103E1791/1	491
2015	B21-A004D	2	16300	5.0	C.5	ACCUMULATOR	103E1791/1	491
2016	B21-A004E	3	16300	3.0	C.5	ACCUMULATOR	103E1791/1	491
2017	B21-A004F	1	16300	3.0	C.5	ACCUMULATOR	103E1791/1	491
2018	B21-A004G	4	16300	5.0	C.5	ACCUMULATOR	103E1791/1	491
2019	B21-A004H	2	16300	5.0	C.5	ACCUMULATOR	103E1791/1	491
2020	B21-A004J	1	16300	3.0	C.5	ACCUMULATOR	103E1791/1	491
2021	B21-A004K	2	16300	5.0	C.5	ACCUMULATOR	103E1791/1	491
2022	B21-A004L	3	16300	3.0	C.5	ACCUMULATOR	103E1791/1	491
2023	B21-A004M	3	16300	3.0	C.5	ACCUMULATOR	103E1791/1	491
2024	B21-A004N	4	16300	5.0	C.5	ACCUMULATOR	103E1791/1	491
2025	B21-A004P	4	16300	5.0	C.5	ACCUMULATOR	103E1791/1	491
2026	B21-A004R	2	16300	3.0	C.5	ACCUMULATOR	103E1791/1	491
2027	B21-A004S	1	16300	3.0	C.5	ACCUMULATOR	103E1791/1	491
2028	B21-A004T	2	16300	5.0	C.5	ACCUMULATOR	103E1791/1	491
2029	B21-A004U	2	16300	5.0	C.5	ACCUMULATOR	103E1791/1	491
2030	B21-F005A	N	12300	4.3	B.8	MAN OPER GATE VALVE	103E1791/1	491
2031	B21-F005B	N	12300	3.7	B.8	MAN OPER GATE VALVE	103E1791/1	491
2032	B21-F008A	1	16300	4.2	B.7	NO GLOBE VALVE (MSIV)	103E1791/1	491
2033	B21-F008A	2	16300	4.2	B.7	NO GLOBE VALVE (MSIV)	103E1791/1	491
2034	B21-F008B	1	16300	4.6	B.7	NO GLOBE VALVE (MSIV)	103E1791/1	491
2035	B21-F008B	2	16300	4.6	B.7	NO GLOBE VALVE (MSIV)	103E1791/1	491
2036	B21-F008C	1	16300	3.4	B.7	NO GLOBE VALVE (MSIV)	103E1791/1	491
2037	B21-F008C	2	16300	3.4	B.7	NO GLOBE VALVE (MSIV)	103E1791/1	491
2038	B21-F008D	1	16300	3.8	B.7	NO GLOBE VALVE (MSIV)	103E1791/1	491
2039	B21-F008D	2	16300	3.8	B.7	NO GLOBE VALVE (MSIV)	103E1791/1	491
2040	B21-F010A	1	16300	4.8	C.5	SRV/ADS VALVE	103E1791/1	491
2041	B21-F010A	2	16300	4.8	C.5	SRV/ADS VALVE	103E1791/1	491
2042	B21-F010A	3	16300	4.8	C.5	SRV/ADS VALVE	103E1791/1	491
2043	B21-F010B	3	16300	4.7	C.3	SAFETY RELIEF VALVE	103E1791/1	491
2044	B21-F010C	1	16300	4.6	C.2	SRV/ADS VALVE	103E1791/1	491
2045	B21-F010C	2	16300	4.6	C.2	SRV/ADS VALVE	103E1791/1	491

Table 9A.6-2 Fire Hazard Analysis Equipment Database Sorted by Room — Reactor Building (Continued)

Item No.	MPL No	Elect Div.	Elev. Location	Location Number Coord.	Location Alpha Coord.	Description	System Drawing	Room No.
2046	B21-F010C	3	16300	4.6	C.2	SRV/ADS VALVE	103E1791/1	491
2047	B21-F010D	1	16300	4.4	C.2	SAFETY RELIEF VALVE	103E1791/1	491
2048	B21-F010E	2	16300	5.2	D.0	SAFETY RELIEF VALVE	103E1791/1	491
2049	B21-F010F	1	16300	5.2	C.9	SRV/ADS VALVE	103E1791/1	491
2050	B21-F010F	2	16300	5.2	C.9	SRV/ADS VALVE	103E1791/1	491
2051	B21-F010F	3	16300	5.2	C.9	SRV/ADS VALVE	103E1791/1	491
2052	B21-F010G	1	16300	5.2	C.7	SAFETY RELIEF VALVE	103E1791/1	491
2053	B21-F010H	1	16300	5.2	C.6	SRV/ADS VALVE	103E1791/1	491
2054	B21-F010H	2	16300	5.2	C.6	SRV/ADS VALVE	103E1791/1	491
2055	B21-F010H	3	16300	5.2	C.6	SRV/ADS VALVE	103E1791/1	491
2056	B21-F010J	2	16300	5.2	C.4	SAFETY RELIEF VALVE	103E1791/1	491
2057	B21-F010K	1	16300	2.8	D.0	SAFETY RELIEF VALVE	103E1791/1	491
2058	B21-F010L	1	16300	2.8	C.9	SRV/ADS VALVE	103E1791/1	491
2059	B21-F010L	2	16300	2.8	C.9	SRV/ADS VALVE	103E1791/1	491
2060	B21-F010L	3	16300	2.8	C.9	SRV/ADS VALVE	103E1791/1	491
2061	B21-F010M	3	16300	2.8	C.7	SAFETY RELIEF VALVE	103E1791/1	491
2062	B21-F010N	1	16300	2.8	C.6	SRV/ADS VALVE	103E1791/1	491
2063	B21-F010N	2	16300	2.8	C.6	SRV/ADS VALVE	103E1791/1	491
2064	B21-F010N	3	16300	2.8	C.6	SRV/ADS VALVE	103E1791/1	491
2065	B21-F010P	1	16300	2.8	C.4	SAFETY RELIEF VALVE	103E1791/1	491
2066	B21-F010R	1	16300	3.2	C.5	SRV/ADS VALVE	103E1791/1	491
2067	B21-F010R	2	16300	3.2	C.5	SRV/ADS VALVE	103E1791/1	491
2068	B21-F010R	3	16300	3.2	C.5	SRV/ADS VALVE	103E1791/1	491
2069	B21-F010S	2	16300	3.3	C.3	SAFETY RELIEF VALVE	103E1791/1	491
2070	B21-F010T	1	16300	3.4	C.2	SRV/ADS VALVE	103E1791/1	491
2071	B21-F010T	2	16300	3.4	C.2	SRV/ADS VALVE	103E1791/1	491
2072	B21-F010T	3	16300	3.4	C.2	SRV/ADS VALVE	103E1791/1	491
2073	B21-F010U	3	16300	3.6	C.2	SAFETY RELIEF VALVE	103E1791/1	491
2074	B21-F011	1	12300	4.0	C.0	MO GLOBE VALVE (DR)	103E1791/1	491
2075	B21-F018	1	12300	4.4	C.5	MO GLOBE VALVE (HDVT)	103E1791/1	491
2076	B21-F019	1	12300	4.4	C.5	MO GLOBE VALVE (HDVT)	103E1791/1	491
2077	B21-F020	1	12300	4.4	C.5	MO GLOBE VALVE (HDVT)	103E1791/1	491
2078	B21-POSA1I	1	16300	4.2	B.7	POSITION SWITCH	103E1791/1	491
2079	B21-POSA2I	1	16300	4.2	B.7	POSITION SWITCH	103E1791/1	491

Table 9A.6-2 Fire Hazard Analysis Equipment Database Sorted by Room — Reactor Building (Continued)

Item No.	MPL No	Elect Div.	Elev. Location	Location Number Coord.	Location Alpha Coord.	Description	System Drawing	Room No.
2080	B21-POSA3I	1	16300	4.2	B.7	POSITION SWITCH	103E1791/1	491
2081	B21-POSB1I	2	16300	4.6	B.7	POSITION SWITCH	103E1791/1	491
2082	B21-POSB2I	2	16300	4.6	B.7	POSITION SWITCH	103E1791/1	491
2083	B21-POSB3I	2	16300	4.6	B.7	POSITION SWITCH	103E1791/1	491
2084	B21-POSC1I	3	16300	3.4	B.7	POSITION SWITCH	103E1791/1	491
2085	B21-POSC2I	3	16300	3.4	B.7	POSITION SWITCH	103E1791/1	491
2086	B21-POSC3I	3	16300	3.4	B.7	POSITION SWITCH	103E1791/1	491
2087	B21-POSD1I	4	16300	3.8	B.7	POSITION SWITCH	103E1791/1	491
2088	B21-POSD2I	4	16300	3.8	B.7	POSITION SWITCH	103E1791/1	491
2089	B21-POSD3I	4	16300	3.8	B.7	POSITION SWITCH	103E1791/1	491
2090	B21-POT011A	3	16300	4.8	C.5	POSITION TRANSMITTER	103E1791/1	491
2091	B21-POT011B	3	16300	4.7	C.3	POSITION TRANSMITTER	103E1791/1	491
2092	B21-POT011C	2	16300	4.6	C.2	POSITION TRANSMITTER	103E1791/1	491
2093	B21-POT011D	1	16300	4.4	C.2	POSITION TRANSMITTER	103E1791/1	491
2094	B21-POT011E	2	16300	5.2	D.0	POSITION TRANSMITTER	103E1791/1	491
2095	B21-POT011F	1	16300	5.2	C.9	POSITION TRANSMITTER	103E1791/1	491
2096	B21-POT011G	1	16300	5.2	C.7	POSITION TRANSMITTER	103E1791/1	491
2097	B21-POT011H	3	16300	5.2	C.6	POSITION TRANSMITTER	103E1791/1	491
2098	B21-POT011J	2	16300	5.2	C.4	POSITION TRANSMITTER	103E1791/1	491
2099	B21-POT011K	1	16300	2.8	D.0	POSITION TRANSMITTER	103E1791/1	491
2100	B21-POT011L	3	16300	2.8	C.9	POSITION TRANSMITTER	103E1791/1	491
2101	B21-POT011M	3	16300	2.8	C.7	POSITION TRANSMITTER	103E1791/1	491
2102	B21-POT011N	2	16300	2.8	C.6	POSITION TRANSMITTER	103E1791/1	491
2103	B21-POT011P	1	16300	2.8	C.4	POSITION TRANSMITTER	103E1791/1	491
2104	B21-POT011R	2	16300	3.0	C.5	POSITION TRANSMITTER	103E1791/1	491
2105	B21-POT011S	2	16300	5.0	C.3	POSITION TRANSMITTER	103E1791/1	491
2106	B21-POT011T	1	16300	3.0	C.2	POSITION TRANSMITTER	103E1791/1	491
2107	B21-POT011U	3	16300	5.0	C.2	POSITION TRANSMITTER	103E1791/1	491
2108	B21-TE029A	N	16300	4.8	C.5	TEMP ELEMENT	103E1791/1	491
2109	B21-TE029B	N	16300	4.7	C.3	TEMP ELEMENT	103E1791/1	491
2110	B21-TE029C	N	16300	4.6	C.2	TEMP ELEMENT	103E1791/1	491
2111	B21-TE029D	N	16300	4.4	D.2	TEMP ELEMENT	103E1791/1	491
2112	B21-TE029E	N	16300	5.2	D.0	TEMP ELEMENT	103E1791/1	491
2113	B21-TE029F	N	16300	5.2	C.9	TEMP ELEMENT	103E1791/1	491

Table 9A.6-2 Fire Hazard Analysis Equipment Database Sorted by Room — Reactor Building (Continued)

Item No.	MPL No	Elect Div.	Elev. Location	Location Number Coord.	Location Alpha Coord.	Description	System Drawing	Room No.
2114	B21-TE029G	N	16300	5.2	C.7	TEMP ELEMENT	103E1791/1	491
2115	B21-TE029H	N	16300	5.2	C.6	TEMP ELEMENT	103E1791/1	491
2116	B21-TE029J	N	16300	5.2	C.4	TEMP ELEMENT	103E1791/1	491
2117	B21-TE029K	N	16300	2.8	D.0	TEMP ELEMENT	103E1791/1	491
2118	B21-TE029L	N	16300	2.8	C.9	TEMP ELEMENT	103E1791/1	491
2119	B21-TE029M	N	16300	2.8	C.7	TEMP ELEMENT	103E1791/1	491
2120	B21-TE029N	N	16300	2.8	C.6	TEMP ELEMENT	103E1791/1	491
2121	B21-TE029P	N	16300	2.8	C.4	TEMP ELEMENT	103E1791/1	491
2122	B21-TE029R	N	16300	3.2	C.5	TEMP ELEMENT	103E1791/1	491
2123	B21-TE029S	N	16300	3.3	C.3	TEMP ELEMENT	103E1791/1	491
2124	B21-TE029T	N	16300	3.4	C.2	TEMP ELEMENT	103E1791/1	491
2125	B21-TE029U	N	16300	3.6	C.2	TEMP ELEMENT	103E1791/1	491
2126	B21-TE032	N	12300	4.4	C.5	TEMP ELEMENT	103E1791/1	491
2127	D23-RE005A	1	14700	5.2	B.8	GAMMA DETECTOR	107E5139/1	491
2128	E11-F006B	2	14500	2.5	D.5	AO CHECK VALVE	103E1797/1	491
2129	E11-F006C	3	14500	5.5	D.1	AO CHECK VALVE	103E1797/1	491
2130	E11-F007B	2	14500	2.7	D.5	MAN OPER GATE VALVE	103E1797/1	491
2131	E11-F007C	3	14500	5.3	D.0	MAN OPER GATE VALVE	103E1797/1	491
2132	E11-F009A	1	14550	5.3	C.5	MAN OPER GATE VALVE	103E1797/1	491
2133	E11-F009B	2	14550	2.6	C.8	MAN OPER GATE VALVE	103E1797/1	491
2134	E11-F009C	3	14550	5.0	D.8	MAN OPER GATE VALVE	103E1797/1	491
2135	E11-F010A	1	14550	5.4	C.6	MO GATE VALVE (ISOL)	103E1797/1	491
2136	E11-F010B	2	14550	2.5	D.1	MO GATE VALVE (ISOL)	103E1797/1	491
2137	E11-F010C	3	14550	5.4	D.5	MO GATE VALVE (ISOL)	103E1797/1	491
2138	E11-F036B	2	14500	2.5	D.5	AO GLOBE VALVE	103E1797/1	491
2139	E11-F036C	3	14500	5.5	D.1	AO GLOBE VALVE	103E1797/1	491
2140	E22-F004B	2	14500	2.5	D.3	AO CHECK VALVE	107E6008/0	491
2141	E22-F004C	3	14500	5.5	D.3	AO CHECK VALVE	107E6008/0	491
2142	E22-F005B	2	14500	2.7	D.2	MAN OPER GATE VALVE	107E6008/0	491
2143	E22-F005C	3	14500	5.3	D.2	MAN OPER GATE VALVE	107E6008/0	491
2144	E22-F019B	2	14500	2.5	D.3	AO GLOBE VALVE	107E6008/0	491
2145	E22-F019C	3	14500	5.5	D.3	AO GLOBE VALVE	107E6008/0	491
2146	E31-FQ017	N	14000	2.9	E.1	DW COOLER DR FLOW INTEG.	103E1792/1	491
2147	E31-TE001	N	15000	4.0	E.0	DW AMB TEMP ELEMENT	103E1792/1	491

Table 9A.6-2 Fire Hazard Analysis Equipment Database Sorted by Room — Reactor Building (Continued)

Item No.	MPL No	Elect Div.	Elev. Location	Location Number Coord.	Location Alpha Coord.	Description	System Drawing	Room No.
2148	E51-F035	1	14450	5.4	C.9	MO GATE VALVE (ST SUP)	103E1795/1	491
2149	E51-F048	1	14450	5.4	C.9	MO GLOBE VALVE (STBYP)	103E1795/1	491
2150	G31-F002	2	14480	2.8	B.9	MO GATE VALVE (ISOL)	107E5051/0	491
2151	G31-F071	2	13500	2.8	B.9	AO VALVE	107E5051/0	491
2152	G31-TE026*	N	13500	2.8	B.9	TEMP ELEMENT	107E5051/0	491
2153	K17-F003	2	16400	2.8	B.8	MO VALVE - LCW ISOL	103E1634/0	491
2154	K17-F103	2	16400	2.8	B.8	MO VALVE - HCW ISOL	103E1634/0	491
2155	P21-F080A	2	13550	4.9	B.7	MO GATE VALVE (ISO)	107E5112/0	491
2156	P21-F080B	2	13550	2.8	E.2	MO GATE VALVE (ISO)	107E5112/0	491
2157	P24-F141	2	13550	3.1	E.3	MO GATE VALVE (DW ISO)	107E5176/0	491
2158	T41-B001A	N	15600	4.7	E.2	DW COOLING UNIT (A)	107E6015/0	491
2159	T41-B001B	N	15600	4.3	E.3	DW COOLING UNIT (B)	107E6015/0	491
2160	T41-B001C	N	15600	3.7	E.3	DW COOLING UNIT (C)	107E6015/0	491
2161	T41-B002A	1	15600	3.0	E.3	DW HNCW COOLING UNIT (A)	107E6015/0	491
2162	T41-B002B	2	15600	3.2	E.3	DW HNCW COOLING UNIT (B)	107E6015/0	491
2163	T41-C001A	N	12300	4.0	E.2	DWC FAN (A)	107E6015/0	491
2164	T41-C001B	N	12300	4.0	E.3	DWC FAN (B)	107E6015/0	491
2165	T41-C001C	N	12300	4.0	E.3	DWC FAN (C)	107E6015/0	491
2166	T41-TE001A*	N	15600	4.7	E.2	TEMP ELEMENT	107E6015/0	491
2167	T41-TE002A*	N	12300	4.0	E.2	TEMP ELEMENT	107E6015/0	491
2168	T41-TE003B*	N	15600	4.3	E.3	TEMP ELEMENT	107E6015/0	491
2169	T41-TE004B*	N	12300	4.0	E.3	TEMP ELEMENT	107E6015/0	491
2170	T41-TE005C*	N	15600	3.7	E.3	TEMP ELEMENT	107E6015/0	491
2171	T41-TE006C*	N	12300	4.0	E.3	TEMP ELEMENT	107E6015/0	491
2172	T41-TE007*	N	15600	3.0	E.3	TEMP ELEMENT	107E6015/0	491
2173	T41-TE008*	N	15600	3.2	E.3	TEMP ELEMENT	107E6015/0	491
2174	H22-P041*	N	18100	5.7	C.0	MSIV LEAK TEST INSTR RACK	10Q273-284	510
2175	R24 MCC SC110	N	18100	5.9	B.5	MCC SC110 - R/B	107E5072/0	510
2176	T31-F733B	1	18100	5.7	B.8	SO VALVE	107E6043/0	510
2177	T31-F801B	2	18100	5.7	B.8	SO VALVE	107E6043/0	510
2178	T31-PT055B	N	18100	5.7	B.8	PRESSURE TRANSMITTER	107E6043/0	510
2179	U41-F004A	1	20000	5.7	B.5	MO VALVE	107E5189/0	510

Table 9A.6-2 Fire Hazard Analysis Equipment Database Sorted by Room — Reactor Building (Continued)

Item No.	MPL No	Elect Div.	Elev. Location	Location Number Coord.	Location Alpha Coord.	Description	System Drawing	Room No.
2180	U41-F101A	1	20000	5.7	B.8	MO VALVE	107E5189/0	510
2181	X-101E	N	19000	5.8	C.2	FMCRD POWER	103E1167	510
2182	U41-F003A	1	20000	5.2	A.6	MO VALVE	107E5189/0	510
2183	E31-F002	1	20100	5.2	B.4	DW FPM A/O SOL VALVE (OB)	103E1792/1	511
2184	E31-F003	2	20100	5.2	B.4	DW FPM A/O SOL VALVE (IB)	103E1792/1	511
2185	P52-F276	1	19000	5.4	B.5	MO GLOBE VALVE (ISOL)	107E5108/1	511
2186	P54-F007A	1	19000	5.4	B.5	MO GLOBE VALVE	107E5128/0	511
2187	P54-PT002A	1	19000	5.4	B.5	PRESS TRANSMITTER	107E5128/0	511
2188	X-069	N	19000	5.3	B.6	STATION SERVICE AIR	107E5105	511
2189	X-070	1	19000	5.3	B.5	INSTRUMENT AIR	107E5108	511
2190	X-071A	1	19000	5.4	B.7	ADS ACCUMULATOR FEED	10Q225-331	511
2191	X-090	1	20100	5.3	B.6	COMPENSATION/INSTR LINE	107E6043/0	511
2192	X-142A	1	20100	5.2	B.5	REA WATER LEV & PRESS	795E877	511
2193	X-146A	1	19000	5.2	B.5	DRYWELL PRESSURE	107E6043/0	511
2194	X-160	?	20100	5.1	B.5	LDS MONITOR	----?----	511
2195	X-171	N	20100	5.1	B.5	DEW POINT METER	----?----	511
2196	P52-F257	N	18100	5.5	B.2	AO GLOBE VALVE	107E5108/1	512
2197	P52-F270	N	18100	5.5	B.2	AO GLOBE VALVE	107E5108/1	512
2198	P52-PS005*	N	18100	5.5	B.3	PRESS SW (N2 SUPPLY)	107E5108/1	512
2199	P52-PT005*	N	18100	5.5	B.3	PRESS XMTR (N2 SUPPLY)	107E5108/1	512
2200	P52-PT006*	N	18100	5.5	B.3	PRESS XMTR (TO PRI CONT)	107E5108/1	512
2201	T31-TE052G	N	18100	5.3	B.3	TEMP ELEMENT	107E6043/0	512
2202	U41-C203A	1	19700	6.5	A.6	DG(A) EMER SUPP FAN A	107E5189/0	514
2203	U41-C203E	1	19700	6.5	A.2	DG(A) EMER SUPP FAN E	107E5189/0	514
2204	U41-TIS054	1	18100	6.8	A.5	TEMP IND SW EMER EXH	107E5189/0	515
2205	R43-P001A*	1	19700	6.8	B.4	DG(A) CONTROL PNL (A)	----?----	516
2206	R43-P002A*	1	19700	6.3	B.4	DG(A) SCT PANEL	----?----	516
2207	T31-F733A	1	18100	6.0	C.5	SO VALVE	107E6043/0	518
2208	T31-POS070A	N	18100	5.9	C.5	POSITION SWITCH	107E6043/0	518
2209	X-102H	1	19000	5.9	C.8	CONTROL & INSTRUMENT	795E898	518

Table 9A.6-2 Fire Hazard Analysis Equipment Database Sorted by Room — Reactor Building (Continued)

Item No.	MPL No	Elect Div.	Elev. Location	Location Number Coord.	Location Alpha Coord.	Description	System Drawing	Room No.
2210	X-104A	N	19000	5.8	C.4	FMCRD POSITION DISPLAY	103E1167	518
2211	X-104E	N	19000	5.8	C.7	FMCRD POSITION DISPLAY	103E1167	518
2212	D23-F001B	2	19000	2.2	D.8	SO VALVE	107E5139/1	520
2213	D23-F004B	2	19000	2.2	D.8	MO GLOBE VALVE	107E5139/1	520
2214	D23-F005B	2	19000	2.2	D.8	MO GLOBE VALVE	107E5139/1	520
2215	D23-PT007B	2	19000	2.2	D.8	PRESS TRANSMITTER	107E5139/1	520
2216	X-101F	N	19000	2.2	D.7	FMCRD POWER	103E1167	520
2217	X-142B	2	20100	2.3	D.9	REA WATER LEV & PRESS	795E877	520
2218	X-146B	2	19000	2.3	D.9	DRYWELL PRESSURE	107E6043/0	520
2219	X-147	2	20100	2.2	D.8	REA WATER LEV WIDE RNG	795E877	520
2220	X-162B	2	19000	2.2	D.8	CAMS GAMMA DETECTOR	10R281-431	520
2221	R24 MCC SC111	N	18100	2.4	F.1	MCC SC111 - R/B	107E5072/0	520
2222	T49-F001C	3	20100	2.7	E.4	MO GATE VALVE	107E6047/0	521
2223	T49-F002B	2	20100	2.7	E.4	AO GATE VALVE	107E6047/0	521
2224	T49-F002B-1	1	20100	2.7	E.4	SOLENOID VALVE	107E6047/0	521
2225	T49-F002B-2	4	20100	2.7	E.4	SOLENOID VALVE	107E6047/0	521
2226	X-081	N	19000	2.8	E.5	DRYWELL PURGE EXHAUST	107E6043/0	521
2227	X-082	2	20100	2.7	E.4	FCS INTAKE	NT-1006643	521
2228	T31-F004	2	19000	2.8	E.6	AO VALVE	107E6043/0	521
2229	T31-F005	2	19000	2.8	E.6	AO VALVE	107E6043/0	521
2230	T31-F008	1	19000	2.6	E.6	AO VALVE	107E6043/0	521
2231	T31-F009	1	19000	2.6	E.6	AO VALVE	107E6043/0	521
2232	T31-F010	2	19000	2.8	E.6	AO VALVE	107E6043/0	521
2233	U41-C206B	2	19700	1.5	F.3	DG(B) EMER SUPP FAN B	107E5189/0	522
2234	U41-C206F	2	19700	1.5	F.8	DG(B) EMER SUPP FAN F	107E5189/0	522
2235	U41-TIS058	2	19700	1.1	F.5	TEMP IND SW EMER EXH	107E5189/0	523
2236	R43-P001B*	2	19700	1.2	E.6	DG(B) CONTROL PNL (A)	----?----	524
2237	R43-P002B*	2	19700	1.8	E.6	DG(B) SCT PANEL	----?----	524
2238	T31-F801A	1	18100	2.0	D.5	SO VALVE	107E6043/0	528
2239	T31-POS070B	N	18100	2.1	D.1	POSITION SWITCH	107E6043/0	528

Table 9A.6-2 Fire Hazard Analysis Equipment Database Sorted by Room — Reactor Building (Continued)

Item No.	MPL No	Elect Div.	Elev. Location	Location Number Coord.	Location Alpha Coord.	Description	System Drawing	Room No.
2240	X-102J	2	19000	2.2	D.3	CONTROL & INSTRUMENT	795E898	528
2241	X-104B	N	19000	2.2	D.5	FMCRD POSITION DISPLAY	103E1167	528
2242	X-104F	N	19000	2.1	D.2	FMCRD POSITION DISPLAY	103E1167	528
2243	D23-PT007A	1	19000	5.7	D.9	PRESS TRANSMITTER	107E5139/1	530
2244	D23-F001A	1	19000	5.7	D.9	SO VALVE	107E5139/1	530
2245	D23-F005A	1	19000	5.7	D.9	MO GLOBE VALVE	107E5139/1	530
2246	D23-F004A	1	19000	5.7	D.9	MO GLOBE VALVE	107E5139/1	530
2247	T49-F001B	2	20100	5.7	D.8	MO GATE VALVE	107E6047/0	530
2248	T49-F002C	3	20100	5.7	D.8	AO GATE VALVE	107E6047/0	530
2249	T49-F002C-1	1	20100	5.7	D.8	SOLENOID VALVE	107E6047/0	530
2250	T49-F002C-2	4	20100	5.7	D.8	SOLENOID VALVE	107E6047/0	530
2251	X-142C	3	20100	5.7	D.8	REA WATER LEV & PRESS	795E877	530
2252	X-146C	3	19000	5.7	D.9	DRYWELL PRESSURE	107E6043/0	530
2253	X-162A	1	19000	5.7	D.8	CAMS GAMMA DETECTOR	10R281-431	530
2254	T31-TE052H	N	18100	5.3	E.5	TEMP ELEMENT	107E6043/0	531
2255	X-101G	N	19000	5.8	D.6	FMCRD POWER	103E1167	532
2256	X-104C	N	19000	5.8	D.3	FMCRD POSITION DISPLAY	103E1167	532
2257	X-104G	N	19000	5.8	D.5	FMCRD POSITION DISPLAY	103E1167	532
2258	X-110	3	20100	5.9	D.2	COMPENSATION/INSTR LINE	107E6043/0	532
2259	U41-C209G	3	19700	6.5	F.8	DG(C) EMER SUPP FAN G	107E5189/0	533
2260	U41-C209C	3	19700	6.5	F.3	DG(C) EMER SUPP FAN C	107E5189/0	533
2261	U41-TIS062	3	19700	6.8	F.5	TEMP IND SW EMER EXH	107E5189/0	534
2262	R43-P001C*	3	19700	6.3	E.6	DG(C) CONTROL PNL (A)	----?----	536
2263	R43-P002C*	3	19700	6.8	E.6	DG(C) SCT PANEL	----?----	536
2264	E31-TE020A	1	18100	4.0	A.5	MSL TUN AMB TEMP ELEM	103E1792/1	440
2265	E31-TE020B	2	18100	4.0	A.5	MSL TUN AMB TEMP ELEM	103E1792/1	440
2266	E31-TE020C	3	18100	4.0	A.5	MSL TUN AMB TEMP ELEM	103E1792/1	440

Table 9A.6-2 Fire Hazard Analysis Equipment Database Sorted by Room — Reactor Building (Continued)

Item No.	MPL No	Elect Div.	Elev. Location	Location Number Coord.	Location Alpha Coord.	Description	System Drawing	Room No.
2267	E31-TE020D	4	18100	4.0	A.5	MSL TUN AMB TEMP ELEM	103E1792/1	440
2268	R10-C001C*	N	18100	1.2	B.8	RIP ASD OUTPUT XFMR	----?----	541
2269	R10-C001J*	N	18100	1.2	B.2	RIP ASD OUTPUT XFMR	----?----	541
2270	G41-FIS017	N	18100	2.8	B.3	FLOW INDICATING SWITCH	107E6042/0	542
2271	G41-FIS018	N	18100	2.8	B.3	FLOW IND SWITCH	107E6042/0	542
2272	G41-FIS021	N	18100	2.8	B.3	FLOW IND SWITCH	107E6042/0	542
2273	G41-FIS022	N	18100	2.8	B.3	FLOW IND SWITCH	107E6042/0	542
2274	G41-FIS023	N	18100	2.8	B.3	FLOW IND SWITCH	107E6042/0	542
2275	G41-FIS024	N	18100	2.8	B.3	FLOW IND SWITCH	107E6042/0	542
2276	X-091	2	20100	2.2	C.5	COMPENSATION/INSTR LINE	107E6043/0	543
2277	X-101D	N	19000	2.2	C.2	FMCRD POWER	103E1167	543
2278	X-104D	N	19000	2.2	C.6	FMCRD POSITION DISPLAY	103E1167	543
2279	X-104H	N	19000	2.2	C.4	FMCRD POSITION DISPLAY	103E1167	543
2280	X-111	2	20100	2.2	C.8	COMPENSATION/INSTR LINE	107E6043/0	543
2281	X-146D	4	19000	2.2	C.5	DRYWELL PRESSURE	107E6043/0	543
2282	P54-F007B	2	19000	2.2	B.9	MO GLOBE VALVE	107E5128/0	543
2283	P54-F200	1	19000	2.4	B.9	MO GLOBE VALVE	107E5128/0	543
2284	P54-PT002B	2	19000	2.3	B.9	PRESS TRANSMITTER	107E5128/0	543
2285	P54-PT005	N	19000	2.4	B.9	PRESS TRANSMITTER	107E5128/0	543
2286	X-071B	2	19000	2.4	B.9	ADS ACCUMULATOR FEED	10Q225-331	543
2287	X-072	N	19000	2.4	B.8	RELIEF VLV ACCUM FEED	10Q225-331	543
2288	X-142D	4	20100	2.3	B.9	REA WATER LEV & PRESS	795E877	543
2289	G41-F013	N	18100	2.8	A.3	MO GATE VALVE (ISOL)	107E6042/0	544
2290	G41-B001A	N	18100	2.5	A.2	HEAT EXCHANGER	107E6042/0	545
2291	G41-B001B	N	18100	2.5	A.4	HEAT EXCHANGER	107E6042/0	545
2292	G41-TE014A	N	18100	2.3	A.2	TEMP ELEMENT	107E6042/0	545
2293	G41-TE014B	N	18100	2.3	A.4	TEMP ELEMENT	107E6042/0	545
2294	G41-C001A	N	18100	1.5	A.2	FPC PUMP A	107E6042/0	546
2295	G41-C001B	N	18100	1.5	A.4	FPC PUMP B	107E6042/0	546
2296	G41-F005A	N	18100	1.8	A.3	MO GATE VALVE (ISOL)	107E6042/0	546

Table 9A.6-2 Fire Hazard Analysis Equipment Database Sorted by Room — Reactor Building (Continued)

Item No.	MPL No	Elect Div.	Elev. Location	Location Number Coord.	Location Alpha Coord.	Description	System Drawing	Room No.
2297	G41-F005B	N	18100	1.8	A.3	MO GATE VALVE (ISOL)	107E6042/0	546
2298	G41-F021A	1	18100	1.8	A.3	MO GLOBE VALVE	107E6042/0	546
2299	G41-F021B	2	18100	1.8	A.3	MO GLOBE VALVE	107E6042/0	546
2300	G41-TE002	N	18100	1.4	A.3	TEMP ELEMENT	107E6042/0	546
2301	H23-P027*	N	18100	1.9	B.2	MULTIPLEXER	----?----	547
2302	H23-P028*	N	18100	1.9	B.3	MULTIPLEXER	----?----	547
2303	U41-D109	1	18100	1.4	A.7	FPC PUMP (A) ROOM HVH	107E5189/0	547
2304	U41-D110	2	18100	1.8	A.7	FPC PUMP (B) ROOM HVH	107E5189/0	547
2305	G41-FT006A	N	18100	2.1	A.7	FLOW TRANSMITTER	107E6042/0	547
2306	G41-FT006B	N	18100	2.1	A.7	FLOW TRANSMITTER	107E6042/0	547
2307	G41-PT003A	N	18100	2.1	A.7	PRESS TRANSMITTER	107E6042/0	547
2308	G41-PT003B	N	18100	2.1	A.7	PRESS TRANSMITTER	107E6042/0	547
2309	H22-P042*	N	18100	2.1	A.7	FPC CU SYS INST RACK	10Q273-284	547
2310	B21-TE012A	1	23000	4.0	C.3	TEMP ELEMENT	103E1791/1	591
2311	B21-TE012C	2	23000	3.5	D.5	TEMP ELEMENT	103E1791/1	591
2312	B21-TE013A	1	23000	4.0	C.3	TEMP ELEMENT	103E1791/1	591
2313	B21-TE013C	2	23000	3.5	D.5	TEMP ELEMENT	103E1791/1	591
2314	B21-TE019A	1	18100	5.0	C.0	TEMP ELEMENT	103E1791/1	591
2315	B21-TE019B	2	18100	3.0	E.0	TEMP ELEMENT	103E1791/1	591
2316	E31-TE002	N	18500	4.0	E.0	DW AMB TEMP ELEMENT	103E1792/1	591
2317	E31-TE003	N	22000	4.0	E.0	DW AMB TEMP ELEMENT	103E1792/1	591
2318	T31-TE051D	N	18100	3.5	C.8	TEMP ELEMENT	107E6043/0	591
2319	T31-TE051E	N	18100	3.3	C.2	TEMP ELEMENT	107E6043/0	591
2320	T31-TE051F	N	18100	3.5	C.0	TEMP ELEMENT	107E6043/0	591
2321	T31-TE051G	N	18100	4.5	C.0	TEMP ELEMENT	107E6043/0	591
2322	T31-TE051H	N	18100	4.7	C.2	TEMP ELEMENT	107E6043/0	591
2323	T31-TE052A	N	18100	4.8	C.5	TEMP ELEMENT	107E6043/0	591
2324	T31-TE052B	N	18100	3.2	C.9	TEMP ELEMENT	107E6043/0	591
2325	T31-TE052C	N	18100	4.2	D.9	TEMP ELEMENT	107E6043/0	591
2326	T31-TE052D	N	18100	4.8	C.5	TEMP ELEMENT	107E6043/0	591
2327	T31-TE052E	N	18100	3.2	C.9	TEMP ELEMENT	107E6043/0	591
2328	T31-TE052F	N	18100	4.2	D.9	TEMP ELEMENT	107E6043/0	591
2329	R43-A005A*	1	23500	6.5	A.2	FUEL OIL DAY TANK	SSAR FIG 9.5-6	610
2330	R43-LS395A*	1	23500	6.8	B.0	LEVEL SWITCH	SSAR FIG 9.5-6	612

Table 9A.6-2 Fire Hazard Analysis Equipment Database Sorted by Room — Reactor Building (Continued)

Item No.	MPL No	Elect Div.	Elev. Location	Location Number Coord.	Location Alpha Coord.	Description	System Drawing	Room No.
2331	U41-B202B	1	27200	6.8	A.8	COOL COIL ELEC EQ (A)	107E5189/0	612
2332	U41-B202A	1	27200	6.5	A.8	COOL COIL ELEC EQ (A)	107E5189/0	612
2333	U41-F005A	1	27200	6.4	A.5	MO VALVE	107E5189/0	613
2334	P54-A001A	1	23500	6.2	B.2	N2 STORAGE BOTTLE	107E5128/0	613
2335	P54-A001C	1	23500	6.2	B.2	N2 STORAGE BOTTLE	107E5128/0	613
2336	P54-A001E	1	23500	6.2	B.2	N2 STORAGE BOTTLE	107E5128/0	613
2337	P54-A001G	1	23500	6.2	B.2	N2 STORAGE BOTTLE	107E5128/0	613
2338	P54-A001J	1	23500	6.2	B.2	N2 STORAGE BOTTLE	107E5128/0	613
2339	P54-A001L	1	23500	6.2	B.2	N2 STORAGE BOTTLE	107E5128/0	613
2340	P54-A001N	1	23500	6.2	B.2	N2 STORAGE BOTTLE	107E5128/0	613
2341	P54-A001Q	1	23500	6.2	B.2	N2 STORAGE BOTTLE	107E5128/0	613
2342	P54-A001S	1	23500	6.2	B.2	N2 STORAGE BOTTLE	107E5128/0	613
2343	P54-A001U	1	23500	6.2	B.2	N2 STORAGE BOTTLE	107E5128/0	613
2344	P54-F003A	1	23500	6.2	B.2	MO GLOBE VALVE	107E5128/0	613
2345	P54-F012A	1	23500	6.2	B.2	MO GLOBE VALVE	107E5128/0	613
2346	P54-PIS001A	1	23500	6.2	B.2	PRESS IND SWITCH	107E5128/0	613
2347	U41-C202A	1	23500	6.4	B.2	DG(A) HVAC EXH FAN A	107E5189/0	613
2348	U41-C202E	1	23500	6.4	B.5	DG(A) HVAC EXH FAN E	107E5189/0	613
2348a	U41-C210A	N	23500	6.4	B.5	SREE HVAC Smoke Removal Fan A	107E5189/0	613
2349	U41-F006A	1	23500	6.4	B.5	MO VALVE	107E5189/0	613
2350	R24 MCC A310	N	23500	6.3	C.0	MCC A310 - R/B	107E5072/0	613
2351	R43-C201A*	1	23500	6.6	B.8	DG AIR COMPRESSOR A	SSAR FIG 9.5-8	613
2352	R43-C202A*	1	23500	6.9	B.8	DG AIR COMPRESSOR A	SSAR FIG 9.5-8	613
2353	D21-RE007	N	23500	5.2	B.0	AREA RAD DETECTOR	299X701-171/0	615
2354	T31-SSA051	N	23500	5.3	C.3	SELECT SWITCH	107E6043/0	615
2355	T31-SSA053	N	23500	5.3	C.3	SELECT SWITCH	107E6043/0	615
2356	T31-TI051	N	23500	5.3	C.4	TEMP INDICATOR	107E6043/0	615
2357	T31-TI053	N	23500	5.3	C.3	TEMP INDICATOR	107E6043/0	615
2358	T31-TT051	N	23500	5.3	C.3	TEMP TRANSMITTER	107E6043/0	615
2359	T31-TT053	N	23500	5.3	C.3	TEMP TRANSMITTER	107E6043/0	615
2360	U41-C103	N	23500	5.4	C.1	PCV PURGE SUPPLY FAN	107E5189/0	615
2361	U41-F004C	3	29000	5.8	B.8	MO VALVE	107E5189/0	616
2362	U41-F101C	3	29000	5.8	B.8	MO VALVE	107E5189/0	616
2363	T31-F731	1	23500	5.8	C.8	SO VALVE	107E6043/0	616

Table 9A.6-2 Fire Hazard Analysis Equipment Database Sorted by Room — Reactor Building (Continued)

Item No.	MPL No	Elect Div.	Elev. Location	Location Number Coord.	Location Alpha Coord.	Description	System Drawing	Room No.
2364	T31-PT054	N	23500	5.8	C.8	PRESSURE TRANSMITTER	107E6043/0	616
2365	D21-RE013	N	23500	5.8	D.0	AREA RAD DETECTOR	299X701-171/0	616
2366	T31-PT055A	N	23500	5.5	D.5	PRESSURE TRANSMITTER	107E6043/0	617
2367	U41-D134A	N	23500	5.3	D.8	ISI ROOM FCU A	107E5189/0	617
2368	R43-A005B*	2	23500	1.5	F.8	FUEL OIL DAY TANK	SSAR FIG 9.5-6	620
2369	D11-D302	N	23500	2.7	F.4	FILTER DEVICE	107E6071/0	621
2370	D23-C001B	2	23500	2.7	F.4	ACCIDENT SMPL. PUMP	107E5139/1	621
2371	D23-C002B	2	23500	2.7	F.4	NORM SMPL.BOOSTER PUMP	107E5139/1	621
2372	D23-C003B	2	23500	2.7	F.4	ACC. SMPL.BOOSTER PUMP	107E5139/1	621
2373	D23-C004B	2	23500	2.7	F.4	NORM. SMPL. PUMP	107E5139/1	621
2374	D23-D010B	2	23500	2.7	F.4	STEAM SEPARATOR	107E5139/1	621
2375	D23-D012B	2	23500	2.7	F.4	DEHUMIDIFIER	107E5139/1	621
2376	D23-D022B	2	23500	2.7	F.4	DRAIN MEAS VESSEL	107E5139/1	621
2377	D23-F105B	2	23500	2.7	F.4	SO VALVE	107E5139/1	621
2378	D23-F108B	2	23500	2.7	F.4	SO VALVE	107E5139/1	621
2379	D23-F118B	2	23500	2.7	F.4	SO VALVE	107E5139/1	621
2380	D23-F121B	2	23500	2.7	F.4	SO VALVE	107E5139/1	621
2381	D23-F123B	2	23500	2.7	F.4	SO VALVE	107E5139/1	621
2382	D23-F127B	2	23500	2.7	F.4	SO VALVE	107E5139/1	621
2383	D23-F130B	2	23500	2.7	F.4	SO VALVE	107E5139/1	621
2384	D23-F132B	2	23500	2.7	F.4	SO VALVE	107E5139/1	621
2385	D23-F190B	2	23500	2.7	F.4	SO VALVE	107E5139/1	621
2386	D23-F191B	2	23500	2.7	F.4	SO VALVE	107E5139/1	621
2387	D23-F193B	2	23500	2.7	F.4	SO VALVE	107E5139/1	621
2388	D23-F195B	2	23500	2.7	F.4	SO VALVE	107E5139/1	621
2389	D23-F197B	2	23500	2.7	F.4	SO VALVE	107E5139/1	621
2390	D23-F201B	2	23500	2.7	F.4	AO VALVE	107E5139/1	621
2391	D23-F202B	2	23500	2.7	F.4	AO VALVE	107E5139/1	621
2392	D23-F510B	2	23500	2.7	F.4	AO VALVE	107E5139/1	621
2393	D23-F513B	2	23500	2.7	F.4	AO VALVE	107E5139/1	621
2394	D23-F515B	2	23500	2.7	F.4	AO VALVE	107E5139/1	621
2395	D23-FIT019B	2	23500	2.7	F.4	FLOW IND TRANSMITTER	107E5139/1	621
2396	D23-H2AM001B	2	23500	2.7	F.4	HYDROGEN ANALYZER	107E5139/1	621

Table 9A.6-2 Fire Hazard Analysis Equipment Database Sorted by Room — Reactor Building (Continued)

Item No.	MPL No	Elect Div.	Elev. Location	Location Number Coord.	Location Alpha Coord.	Description	System Drawing	Room No.
2397	D23-H2E001B	2	23500	2.7	F.4	HYDROGEN ANAL ELEM	107E5139/1	621
2398	D23-LIT031B	2	23500	2.7	F.4	LEVEL IND TRANS	107E5139/1	621
2399	D23-O2AM003B	2	23500	2.7	F.4	OXYGEN ANALYZER	107E5139/1	621
2400	D23-O2E003B	2	23500	2.7	F.4	OXYGEN ANAL ELEM	107E5139/1	621
2401	D23-PIS017B	2	23500	2.7	F.4	PRESS IND SWITCH	107E5139/1	621
2402	D23-PIT021B	2	23500	2.7	F.4	PRESS IND TRANSMITTER	107E5139/1	621
2403	D23-PS024B	2	23500	2.7	F.4	PRESS SWITCH	107E5139/1	621
2404	D23-PS026B	2	23500	2.7	F.4	PRESS SWITCH	107E5139/1	621
2405	D23-PS027B	2	23500	2.7	F.4	PRESS SWITCH	107E5139/1	621
2406	D23-SC033B	2	23500	2.7	F.4	STEAM CONDENSER	107E5139/1	621
2407	D23-TE020B	2	23500	2.7	F.4	TEMP ELEMENT	107E5139/1	621
2408	D23-TS016B	2	23500	2.7	F.4	TEMP SWITCH	107E5139/1	621
2409	H22-P053B*	2	23500	2.7	F.4	D23, CAMS RACK B	107E5139/1	621
2410	H22-P054B*	2	23500	2.7	F.4	D23, CAMS CALIB RACK B	107E5139/1	621
2411	U41-F003B	2	23500	2.7	F.4	MO VALVE	107E5189/0	621
2412	D21-RE008	N	23500	2.8	F.1	AREA RAD DETECTOR	299X701-171/0	622
2413	C41-C001A	1	23500	2.4	E.2	SLC INJECTION PUMP A	107E6016/0	622
2414	C41-C001B	2	23500	2.2	E.2	SLC INJECTION PUMP B	107E6016/0	622
2415	C41-A001	N	23500	2.3	D.6	SLC STORAGE TANK	107E6016/0	622
2416	C41-A002	N	23500	2.1	D.2	SLC TEST TANK	107E6016/0	622
2417	C41-B001	N	23500	2.3	D.6	SLC MIXING HEATER	107E6016/0	622
2418	C41-B002	N	23500	2.3	D.6	SLC OPERATING HEATER	107E6016/0	622
2419	C41-F001A	1	23500	2.5	E.0	MO GLOBE VALVE (SUCT)	107E6016/0	622
2420	C41-F001B	2	23500	2.2	E.0	MO GLOBE VALVE (SUCT)	107E6016/0	622
2421	C41-F010	N	23500	2.1	D.2	MAN OPER GLOBE VALVE	107E6016/0	622
2422	C41-F012	N	23500	2.1	D.2	MAN OPER GATE VALVE	107E6016/0	622
2423	C41-LE001	N	23500	2.3	D.6	LEVEL SENSOR	107E6016/0	622
2424	C41-LI001	N	23500	2.3	D.6	LEVEL INDICATOR	107E6016/0	622
2425	C41-LT001	N	23500	2.3	D.6	LEVEL TRANSMITTER	107E6016/0	622
2426	C41-PT005	N	23500	2.1	D.2	PRESS TRANSMITTER	107E6016/0	622
2427	C41-TE002	N	23500	2.3	D.6	TEMP ELEMENT	107E6016/0	622
2428	C41-TE003	N	23500	2.3	D.6	TEMP ELEMENT	107E6016/0	622
2429	C41-TE006	N	23500	2.3	D.6	TEMP ELEMENT	107E6016/0	622
2430	C41-TIS002	N	23500	2.3	D.6	TEMP SWITCH	107E6016/0	622

Table 9A.6-2 Fire Hazard Analysis Equipment Database Sorted by Room — Reactor Building (Continued)

Item No.	MPL No	Elect Div.	Elev. Location	Location Number Coord.	Location Alpha Coord.	Description	System Drawing	Room No.
2431	C41-TIS003	N	23500	2.3	D.6	TEMP SWITCH	107E6016/0	622
2432	C41-TIS006	N	23500	2.3	D.6	TEMP SWITCH	107E6016/0	622
2433	U41-C104	N	23500	2.3	E.7	PCV PURGE EXHAUST FAN	107E5189/0	623
2434	R43-LS395B*	2	23500	1.3	E.9	LEVEL SWITCH	SSAR FIG 9.5-6	624
2435	U41-B204B	2	27200	1.2	F.2	COOL COIL,ELEC EQ (B)	107E5189/0	663
2436	U41-B204F	2	27200	1.5	F.2	COOL COIL,ELEC EQ (B)	107E5189/0	663
2437	U41-F005B	2	27200	1.6	F.3	MO VALVE	107E5189/0	663
2438	U41-C205F	2	23500	1.8	E.7	DG(B) HVAC EXH FAN F	107E5189/0	625
2438a	U41-C211B	N	23500	1.8	E.7	SREE HVAC Smoke Removal Fan B	107E5189/0	625
2439	U41-F006B	2	23500	1.6	E.5	MO VALVE	107E5189/0	625
2440	R43-C201B*	2	23500	1.1	E.2	DG AIR COMPRESSOR B	SSAR FIG 9.5-8	625
2441	R43-C202B*	2	23500	1.3	E.2	DG AIR COMPRESSOR B	SSAR FIG 9.5-8	625
2442	U41-C205B	2	23500	1.8	E.4	DG(B) HVAC EXH FAN B	107E5189/0	625
2443	R24 MCC B310	N	23500	1.8	D.5	MCC B310 - R/B	107E5072/0	625
2444	R43-A005C*	3	23500	6.5	F.8	FUEL OIL DAY TANK	SSAR FIG 9.5-6	630
2445	R43-LS395C*	3	23500	6.7	E.9	LEVEL SWITCH	SSAR FIG 9.5-6	632
2446	U41-B206G	3	27200	6.8	F.2	COOL COIL,ELEC EQ (C)	107E5189/0	673
2447	U41-B206C	3	27200	6.5	F.2	COOL COIL,ELEC EQ (C)	107E5189/0	673
2448	H22-P044A*	1	23500	6.3	F.1	CAMS GAS CYL RACK A	107E5139/1	633
2449	U41-F005C	3	27200	6.4	F.3	MO VALVE	107E5189/0	673
2449a	U41-C212C	N	23500	6.3	E.5	SREE HVAC Smoke Removal Fan C	107E5189/0	633
2450	R24 MCC C310	N	23500	6.3	E.5	MCC C310 - R/B	107E5072/0	633
2451	R43-C201C*	3	23500	6.6	E.2	DG AIR COMPRESSOR C	SSAR FIG 9.5-8	633
2452	R43-C202C*	3	23500	6.6	E.4	DG AIR COMPRESSOR C	SSAR FIG 9.5-8	633
2453	R10-C001E*	N	23500	6.3	D.5	RIP ASD OUTPUT XFMR	----?----	638
2454	R10-C001B*	N	23500	6.3	C.7	RIP ASD OUTPUT XFMR	----?----	638
2455	U41-D134B	N	23500	5.5	E.4	ISI ROOM FCU B	107E5189/0	639
2456	P54-A001B	2	23500	1.8	A.4	N2 STORAGE BOTTLE	107E5128/0	640
2457	P54-A001D	2	23500	1.8	A.4	N2 STORAGE BOTTLE	107E5128/0	640
2458	P54-A001F	2	23500	1.8	A.4	N2 STORAGE BOTTLE	107E5128/0	640
2459	P54-A001H	2	23500	1.8	A.4	N2 STORAGE BOTTLE	107E5128/0	640
2460	P54-A001K	2	23500	1.8	A.4	N2 STORAGE BOTTLE	107E5128/0	640

Table 9A.6-2 Fire Hazard Analysis Equipment Database Sorted by Room — Reactor Building (Continued)

Item No.	MPL No	Elect Div.	Elev. Location	Location Number Coord.	Location Alpha Coord.	Description	System Drawing	Room No.
2461	P54-A001M	2	23500	1.8	A.4	N2 STORAGE BOTTLE	107E5128/0	640
2462	P54-A001P	2	23500	1.8	A.4	N2 STORAGE BOTTLE	107E5128/0	640
2463	P54-A001R	2	23500	1.8	A.4	N2 STORAGE BOTTLE	107E5128/0	640
2464	P54-A001T	2	23500	1.8	A.4	N2 STORAGE BOTTLE	107E5128/0	640
2465	P54-A001V	2	23500	1.8	A.4	N2 STORAGE BOTTLE	107E5128/0	640
2466	P54-F003B	2	23500	1.8	A.6	MO GLOBE VALVE	107E5128/0	640
2467	P54-F012B	2	23500	1.8	A.6	MO GLOBE VALVE	107E5128/0	640
2468	P54-F203	N	23500	1.8	A.6	MO GLOBE VALVE	107E5128/0	640
2469	P54-PIS001B	2	23500	1.8	A.6	PRESS IND SWITCH	107E5128/0	640
2470	P54-PT004	N	23500	1.8	A.6	PRESS TRANSMITTER	107E5128/0	640
2471	R23 P/C EN110A	N1	23500	1.5	A.5	P/C EN110A - LO VOLT SWTGR	107E5072/0	640
2472	R23 P/C EN110B	N2	23500	1.2	A.5	P/C EN110B - LO VOLT SWTGR	107E5072/0	640
2473	R23 P/C EN110C	N3	23500	1.2	A.2	P/C EN110C - LO VOLT SWTGR	107E5072/0	640
2474	H22-P044B*	2	23500	1.7	B.8	CAMS GAS CYL RACK B	107E5139/1	640
2475	R24 MCC EN110A	N1	23500	1.3	B.5	MCC EN110A - R/B	107E5072/0	640
2475a	R24 MCC EN110B	N2	23500	1.3	B.6	MCC EN110B - R/B	107E5072/0	640
2476	R24 MCC EN110C	N3	23500	1.3	B.7	MCC EN110C - R/B	107E5072/0	640
2477	H23-P029*	N	23500	1.9	C.3	MULTIPLEXER	----?----	640
2478	H23-P030*	N	23500	1.9	C.5	MULTIPLEXER	----?----	640
2479	H23-P031*	N	23500	1.9	C.7	MULTIPLEXER	----?----	640
2480	D11-F053	N	23500	2.4	C.9	SOLENOID VALVE	107E6071/0	641
2481	D11-F054	N	23500	2.4	C.9	SOLENOID VALVE	107E6071/0	641
2482	D11-RE002A	N	23500	2.5	C.1	SBGTS ION CHAMBER	107E6071/0	641
2483	D11-RE002B	N	23500	2.5	C.1	SBGTS ION CHAMBER	107E6071/0	641
2484	H22-P043B	2	23500	2.2	C.5	SBGT INSTR RACK	10Q273-285	641
2485	P54-DPS003	N	23500	2.0	C.5	DIFF PRESS SWITCH	107E5128/0	641
2486	T22-B001B	2	23500	2.2	C.7	DRYER HEATER B	107E6046/1	641
2487	T22-C001B	2	23500	2.2	C.1	EXHAUST FAN B	107E6046/1	641
2488	T22-C002B	3	23500	2.2	C.7	COOLING FAN B	107E6046/1	641
2489	T22-C003B*	2	23500	2.2	C.6	PREHTR & FAN B - FLTR	107E6046/1	641
2490	T22-C004B*	2	23500	2.2	C.6	AFTRHTR & FAN B - FLTR	107E6046/1	641
2491	T22-D003B	2	23500	2.2	C.6	PRE HEPA FILTER B	107E6046/1	641

Table 9A.6-2 Fire Hazard Analysis Equipment Database Sorted by Room — Reactor Building (Continued)

Item No.	MPL No	Elect Div.	Elev. Location	Location Number Coord.	Location Alpha Coord.	Description	System Drawing	Room No.
2492	T22-D004B	2	23500	2.2	C.2	POST HEPA FILTER B	107E6046/1	641
2493	T22-DOO2B*	2	23500	2.2	C.7	PRE FILTER TRAIN	107E6046/1	641
2494	T22-DPI003B	2	23500	2.2	C.7	DIFF PRESS INDICATOR	107E6046/1	641
2495	T22-DPI007B	2	23500	2.2	C.7	DIFF PRESS INDICATOR	107E6046/1	641
2496	T22-DPI008B	2	23500	2.2	C.6	DIFF PRESS INDICATOR	107E6046/1	641
2497	T22-DPI012B	2	23500	2.2	C.6	DIFF PRESS INDICATOR	107E6046/1	641
2498	T22-DPI017B	2	23500	2.2	C.2	DIFF PRESS INDICATOR	107E6046/1	641
2499	T22-DPT003B	2	23500	2.2	C.7	DIFF PRESS XMTR	107E6046/1	641
2500	T22-DPT007B	2	23500	2.2	C.7	DIFF PRESS XMTR	107E6046/1	641
2501	T22-DPT008B	2	23500	2.2	C.6	DIFF PRESS XMTR	107E6046/1	641
2502	T22-DPT012B	2	23500	2.2	C.6	DIFF PRESS XMTR	107E6046/1	641
2503	T22-DPT017B	2	23500	2.2	C.2	DIFF PRESS XMTR	107E6046/1	641
2504	T22-F002B	2	23500	2.2	C.9	MO BUTTERFLY VALVE	107E6046/1	641
2505	T22-F002C	3	23500	2.2	B.8	MO BUTTERFLY VALVE	107E6046/1	641
2506	T22-F004B	2	23500	2.2	C.1	MO BUTTERFLY VALVE	107E6046/1	641
2507	T22-F005B	2	23500	2.3	C.7	MO VALVE	107E6046/1	641
2508	T22-F020	3	23500	2.2	B.8	AO VALVE	107E6046/1	641
2509	T22-F022	2	23500	2.2	C.9	AO VALVE	107E6046/1	641
2510	T22-F511B	2	23500	2.3	C.1	MAN OPER VALVE	107E6046/1	641
2511	T22-FT018B	2	23500	2.2	C.9	FLOW TRANSMITTER	107E6046/1	641
2512	T22-FT018C	3	23500	2.2	B.8	FLOW TRANSMITTER	107E6046/1	641
2513	T22-LS004B	2	23500	2.2	C.7	LEVEL SWITCH	107E6046/1	641
2514	T22-LS019B	2	23500	2.2	C.1	LEVEL SWITCH	107E6046/1	641
2515	T22-ME011B	2	23500	2.2	C.6	MOISTURE ELEMENT	107E6046/1	641
2516	T22-ME012B	2	23500	2.2	C.6	MOISTURE ELEMENT	107E6046/1	641
2517	T22-MT011B	2	23500	2.2	C.6	MOISTURE TRANSMITTER	107E6046/1	641
2518	T22-MT012B	2	23500	2.2	C.6	MOISTURE TRANSMITTER	107E6046/1	641
2519	T22-POE001B	2	23500	2.2	C.9	POSITION ELEMENT	107E6046/1	641
2520	T22-POE001C	3	23500	2.2	B.8	POSITION ELEMENT	107E6046/1	641
2521	T22-TE002B	2	23500	2.2	C.7	TEMP ELEMENT	107E6046/1	641
2522	T22-TE010B	2	23500	2.2	C.6	TEMP ELEMENT	107E6046/1	641
2523	T22-TE013B	2	23500	2.2	C.6	TEMP ELEMENT	107E6046/1	641
2524	T22-TE014B	2	23500	2.2	C.3	TEMP ELEMENT	107E6046/1	641
2525	T22-TE016B	2	23500	2.2	C.2	TEMP ELEMENT	107E6046/1	641

Table 9A.6-2 Fire Hazard Analysis Equipment Database Sorted by Room — Reactor Building (Continued)

Item No.	MPL No	Elect Div.	Elev. Location	Location Number Coord.	Location Alpha Coord.	Description	System Drawing	Room No.
2526	T22-TS005B	2	23500	2.2	C.7	TEMP SWITCH	107E6046/1	641
2527	T22-TS009B	2	23500	2.2	C.6	TEMP SWITCH	107E6046/1	641
2528	T22-TS013B	2	23500	2.2	C.6	TEMP SWITCH	107E6046/1	641
2529	T22-TS015B	2	23500	2.2	C.2	TEMP ELEMENT	107E6046/1	641
2530	U41-D112	2	23500	2.5	C.9	SGTS ROOM HVH (B)	107E5189/0	641
2531	H22-P043A	3	23500	2.4	B.5	SBGT INSTR RACK	10Q273-285	642
2532	T22-B001C	3	23500	2.2	B.6	DRYER HEATER C	107E6046/1	642
2533	T22-C001C	3	23500	2.2	B.2	EXHAUST FAN C	107E6046/1	642
2534	T22-C002C	2	23500	2.2	B.6	COOLING FAN C	107E6046/1	642
2535	T22-C003C*	3	23500	2.2	B.5	PREHTR & FAN C - FLTR	107E6046/1	642
2536	T22-C004C*	3	23500	2.2	B.5	AFTRHTR & FAN C - FLTR	107E6046/1	642
2537	T22-D002C*	3	23500	2.2	B.6	PRE FILTER TRAIN	107E6046/1	642
2538	T22-D003C	3	23500	2.2	B.5	PRE HEPA FILTER C	107E6046/1	642
2539	T22-D004C	3	23500	2.2	B.3	POST HEPA FILTER C	107E6046/1	642
2540	T22-DPI003C	3	23500	2.2	B.5	DIFF PRESS INDICATOR	107E6046/1	642
2541	T22-DPI007C	3	23500	2.2	B.6	DIFF PRESS INDICATOR	107E6046/1	642
2542	T22-DPI008C	3	23500	2.2	B.5	DIFF PRESS INDICATOR	107E6046/1	642
2543	T22-DPI012C	3	23500	2.2	B.5	DIFF PRESS INDICATOR	107E6046/1	642
2544	T22-DPI017C	3	23500	2.2	B.3	DIFF PRESS INDICATOR	107E6046/1	642
2545	T22-DPT003C	3	23500	2.2	B.5	DIFF PRESS XMTR	107E6046/1	642
2546	T22-DPT007C	3	23500	2.2	B.6	DIFF PRESS XMTR	107E6046/1	642
2547	T22-DPT008C	3	23500	2.2	B.5	DIFF PRESS XMTR	107E6046/1	642
2548	T22-DPT012C	3	23500	2.2	B.5	DIFF PRESS XMTR	107E6046/1	642
2549	T22-DPT017C	3	23500	2.2	B.3	DIFF PRESS XMTR	107E6046/1	642
2550	T22-F004C	3	23500	2.2	B.2	MO BUTTERFLY VALVE	107E6046/1	642
2551	T22-F005C	3	23500	2.3	B.3	MO VALVE	107E6046/1	642
2552	T22-F511C	3	23500	2.3	B.2	MAN OPER VALVE	107E6046/1	642
2553	T22-LS004C	3	23500	2.2	B.6	LEVEL SWITCH	107E6046/1	642
2554	T22-LS019C	3	23500	2.2	B.2	LEVEL SWITCH	107E6046/1	642
2555	T22-ME011C	3	23500	2.2	B.5	MOISTURE ELEMENT	107E6046/1	642
2556	T22-ME012C	3	23500	2.2	B.5	MOISTURE ELEMENT	107E6046/1	642
2557	T22-MT011C	3	23500	2.2	B.5	MOISTURE TRANSMITTER	107E6046/1	642
2558	T22-MT012C	3	23500	2.2	B.5	MOISTURE TRANSMITTER	107E6046/1	642
2559	T22-TE002C	3	23500	2.2	B.6	TEMP ELEMENT	107E6046/1	642

Table 9A.6-2 Fire Hazard Analysis Equipment Database Sorted by Room — Reactor Building (Continued)

Item No.	MPL No	Elect Div.	Elev. Location	Location Number Coord.	Location Alpha Coord.	Description	System Drawing	Room No.
2560	T22-TE010C	3	23500	2.2	B.5	TEMP ELEMENT	107E6046/1	642
2561	T22-TE013C	3	23500	2.2	B.5	TEMP ELEMENT	107E6046/1	642
2562	T22-TE014C	3	23500	2.2	B.4	TEMP ELEMENT	107E6046/1	642
2563	T22-TE016C	3	23500	2.2	B.3	TEMP ELEMENT	107E6046/1	642
2564	T22-TS005C	3	23500	2.2	B.6	TEMP SWITCH	107E6046/1	642
2565	T22-TS009C	3	23500	2.2	B.5	TEMP SWITCH	107E6046/1	642
2566	T22-TS013C	3	23500	2.2	B.5	TEMP SWITCH	107E6046/1	642
2567	T22-TS015C	3	23500	2.2	B.3	TEMP ELEMENT	107E6046/1	642
2568	U41-D111	3	23500	2.2	B.2	SGTS ROOM HVH (A)	107E5189/0	642
2569	R24 MCC SB110	N	23500	2.8	C.5	MCC SB110 - R/B	107E5072/0	643
2570	R24 MCC SB111	N	23500	2.8	C.5	MCC SB111 - R/B	107E5072/0	643
2571	U41-D114	2	27500	2.7	C.7	CAMS (B) ROOM HVH	107E5189/0	643
2572	U41-F004B	2	29000	2.8	B.5	MO VALVE	107E5189/0	643
2573	U41-F101B	2	29000	2.8	B.8	MO VALVE	107E5189/0	643
2574	U41-DPIS013	N	27500	2.8	A.7	DIFF PESS IND SENSOR	107E5189/0	643
2575	U41-F002A	1	27500	2.8	A.7	AO VLV - R/A EXH ISO (A)	107E5189/0	643
2576	U41-F002B	2	27500	2.8	A.9	AO VLV - R/A EXH ISO (B)	107E5189/0	643
2577	U41-C201A	1	27600	6.5	B.2	DG(A) HVAC SUPP FAN A	107E5189/0	653
2578	U41-C201E	1	27600	6.8	B.2	DG(A) HVAC SUPP FAN E	107E5189/0	653
2579	U41-TE052	1	27600	6.7	B.3	TEMP ELEMENT	107E5189/0	653
2580	P25-F022A	1	27600	6.7	A.8	TCV; DG A RM CLG	107E5182/0	653
2581	H21-P009-02	N	27600	6.5	D.0	REMOTE COMM CABNET (C11)	103E1167	654
2582	H21-P009-04	N	27600	6.5	D.0	REMOTE COMM CABNET (C11)	103E1167	654
2583	H21-P009-06	N	27600	6.5	D.0	REMOTE COMM CABNET (C11)	103E1167	654
2584	H21-P009-08	N	27600	6.5	D.0	REMOTE COMM CABNET (C11)	103E1167	654
2585	H21-P009-10	N	27600	6.5	D.0	REMOTE COMM CABNET (C11)	103E1167	654
2586	H21-P009-12	N	27600	6.5	D.0	REMOTE COMM CABNET (C11)	103E1167	654
2587	H21-P009-14	N	27600	6.5	D.0	REMOTE COMM CABNET (C11)	103E1167	654
2588	H21-P009-16	N	27600	6.5	D.0	REMOTE COMM CABNET (C11)	103E1167	654

Table 9A.6-2 Fire Hazard Analysis Equipment Database Sorted by Room — Reactor Building (Continued)

Item No.	MPL No	Elect Div.	Elev. Location	Location Number Coord.	Location Alpha Coord.	Description	System Drawing	Room No.
2589	H21-P009-18	N	27600	6.5	D.0	REMOTE COMM CABNET (C11)	103E1167	654
2590	H21-P009-20	N	27600	6.5	D.0	REMOTE COMM CABNET (C11)	103E1167	654
2591	H21-P009-22	N	27600	6.5	D.0	REMOTE COMM CABNET (C11)	103E1167	654
2592	H21-P009-24	N	27600	6.5	D.0	REMOTE COMM CABNET (C11)	103E1167	654
2593	H21-P009-26	N	27600	6.5	D.0	REMOTE COMM CABNET (C11)	103E1167	654
2594	H21-P010-02	N1	27600	6.5	D.0	BREAK CTRL CABNET (C11)	103E1167	654
2595	H21-P010-04	N2	27600	6.5	D.0	BREAK CTRL CABNET (C11)	103E1167	654
2596	H21-P010-06	N3	27600	6.5	D.0	BREAK CTRL CABNET (C11)	103E1167	654
2597	H21-P011-02	N1	27600	6.5	D.0	FINE MOTION DR CAB (C11)	103E1167	654
2598	H21-P011-04	N1	27600	6.5	D.0	FINE MOTION DR CAB (C11)	103E1167	654
2599	H21-P011-06	N2	27600	6.5	D.0	FINE MOTION DR CAB (C11)	103E1167	654
2600	H21-P011-08	N2	27600	6.5	D.0	FINE MOTION DR CAB (C11)	103E1167	654
2601	H21-P011-10	N3	27600	6.5	D.0	FINE MOTION DR CAB (C11)	103E1167	654
2602	H21-P011-12	N3	27600	6.5	D.0	FINE MOTION DR CAB (C11)	103E1167	654
2603	H21-P011-14	N1	27600	6.5	D.0	FINE MOTION DR CAB (C11)	103E1167	654
2604	H21-P011-16	N1	27600	6.5	D.0	FINE MOTION DR CAB (C11)	103E1167	654
2605	H21-P011-18	N2	27600	6.5	D.0	FINE MOTION DR CAB (C11)	103E1167	654
2606	H21-P011-20	N2	27600	6.5	D.0	FINE MOTION DR CAB (C11)	103E1167	654
2607	H21-P011-22	N3	27600	6.5	D.0	FINE MOTION DR CAB (C11)	103E1167	654
2608	H21-P011-24	N3	27600	6.5	D.0	FINE MOTION DR CAB (C11)	103E1167	654
2609	H21-P011-26	N1	27600	6.5	D.0	FINE MOTION DR CAB (C11)	103E1167	654

Table 9A.6-2 Fire Hazard Analysis Equipment Database Sorted by Room — Reactor Building (Continued)

Item No.	MPL No	Elect Div.	Elev. Location	Location Number Coord.	Location Alpha Coord.	Description	System Drawing	Room No.
2610	H21-P011-28	N1	27600	6.5	D.0	FINE MOTION DR CAB (C11)	103E1167	654
2611	H21-P011-30	N2	27600	6.5	D.0	FINE MOTION DR CAB (C11)	103E1167	654
2612	H21-P011-32	N2	27600	6.5	D.0	FINE MOTION DR CAB (C11)	103E1167	654
2613	H21-P011-34	N3	27600	6.5	D.0	FINE MOTION DR CAB (C11)	103E1167	654
2614	H21-P011-36	N3	27600	6.5	D.0	FINE MOTION DR CAB (C11)	103E1167	654
2615	H21-P011-38	N1	27600	6.5	D.0	FINE MOTION DR CAB (C11)	103E1167	654
2616	H21-P011-40	N1	27600	6.5	D.0	FINE MOTION DR CAB (C11)	103E1167	654
2617	H21-P011-42	N2	27600	6.5	D.0	FINE MOTION DR CAB (C11)	103E1167	654
2618	H21-P011-44	N2	27600	6.5	D.0	FINE MOTION DR CAB (C11)	103E1167	654
2619	H21-P011-46	N3	27600	6.5	D.0	FINE MOTION DR CAB (C11)	103E1167	654
2620	H21-P011-48	N3	27600	6.5	D.0	FINE MOTION DR CAB (C11)	103E1167	654
2621	H21-P011-50	N1	27600	6.5	D.0	FINE MOTION DR CAB (C11)	103E1167	654
2622	H21-P011-52	N2	27600	6.5	D.0	FINE MOTION DR CAB (C11)	103E1167	654
2623	H21-P011-54	N3	27600	6.5	D.0	FINE MOTION DR CAB (C11)	103E1167	654
2624	H21-P012-02	N1	27600	6.5	D.0	FMCRD DISTR CAB (C11)	103E1167	654
2625	H21-P012-04	N1	27600	6.5	D.0	FMCRD DISTR CAB (C11)	103E1167	654
2626	H21-P012-06	N2	27600	6.5	D.0	FMCRD DISTR CAB (C11)	103E1167	654
2627	H21-P012-08	N2	27600	6.5	D.0	FMCRD DISTR CAB (C11)	103E1167	654
2628	H21-P012-10	N3	27600	6.5	D.0	FMCRD DISTR CAB (C11)	103E1167	654
2629	H21-P012-12	N3	27600	6.5	D.0	FMCRD DISTR CAB (C11)	103E1167	654
2630	H21-P013-02*	N	27600	6.5	D.0	FMCRD SCRAM TIME CAB	103E1167	654
2631	H21-P013-04*	N	27600	6.5	D.0	FMCRD SCRAM TIME CAB	103E1167	654
2632	H21-P013-06*	N	27600	6.5	D.0	FMCRD SCRAM TIME CAB	103E1167	654
2633	R23 P/C EA10B	N	27600	6.5	D.0	P/C EA10 - LO VOLT SWTGR	107E5072/0	654
2634	H22-P010	N	27200	5.5	B.9	E31,AIR PARTI SMPL PNL	107E5015/A	657

Table 9A.6-2 Fire Hazard Analysis Equipment Database Sorted by Room — Reactor Building (Continued)

Item No.	MPL No	Elect Div.	Elev. Location	Location Number Coord.	Location Alpha Coord.	Description	System Drawing	Room No.
2635	H22-P011	N	27200	5.5	B.9	E31,IODINE/NOBEL GAS PNL	107E5015/A	657
2636	D23-F195A	1	26900	5.3	D.9	SO VALVE	107E5139/1	659
2637	D23-C001A	1	26900	5.3	D.9	ACCIDENT SMPL. PUMP	107E5139/1	659
2638	D23-O2E003A	1	26900	5.3	D.9	OXYGEN ANAL ELEM	107E5139/1	659
2639	D23-F105A	1	26900	5.3	D.9	SO VALVE	107E5139/1	659
2640	D23-TS016A	1	26900	5.3	D.9	TEMP SWITCH	107E5139/1	659
2641	D23-O2AM003A	1	26900	5.3	D.9	OXYGEN ANALYZER	107E5139/1	659
2642	D23-TE020A	1	26900	5.3	D.9	TEMP ELEMENT	107E5139/1	659
2643	D23-F108A	1	26900	5.3	D.9	SO VALVE	107E5139/1	659
2644	D23-SC033A	1	26900	5.3	D.9	STEAM CONDENSER	107E5139/1	659
2645	D23-LIT031A	1	26900	5.3	D.9	LEVEL IND TRANS	107E5139/1	659
2646	D23-F118A	1	26900	5.3	D.9	SO VALVE	107E5139/1	659
2647	D23-H2E001A	1	26900	5.3	D.9	HYDROGEN ANAL ELEM	107E5139/1	659
2648	D23-F121A	1	26900	5.3	D.9	SO VALVE	107E5139/1	659
2649	D23-PS027A	1	26900	5.3	D.9	PRESS SWITCH	107E5139/1	659
2650	D23-H2AM001A	1	26900	5.3	D.9	HYDROGEN ANALYZER	107E5139/1	659
2651	D23-PS026A	1	26900	5.3	D.9	PRESS SWITCH	107E5139/1	659
2652	D23-F123A	1	26900	5.3	D.9	SO VALVE	107E5139/1	659
2653	D23-PS024A	1	26900	5.3	D.9	PRESS SWITCH	107E5139/1	659
2654	D23-FIT019A	1	26900	5.3	D.9	FLOW IND TRANSMITTER	107E5139/1	659
2655	D23-PIT021A	1	26900	5.3	D.9	PRESS IND TRANSMITTER	107E5139/1	659
2656	D23-F127A	1	26900	5.3	D.9	SO VALVE	107E5139/1	659
2657	D23-PIS017A	1	26900	5.3	D.9	PRESS IND SWITCH	107E5139/1	659
2658	D23-F515A	1	26900	5.3	D.9	AO VALVE	107E5139/1	659
2659	D23-C002A	1	27200	5.3	D.9	NORM SMPL.BOOSTER PUMP	107E5139/1	659
2660	D23-F130A	1	26900	5.3	D.9	SO VALVE	107E5139/1	659
2661	D23-C004A	1	26900	5.3	D.9	NORM. SMPL. PUMP	107E5139/1	659
2662	D23-F513A	1	26900	5.3	D.9	AO VALVE	107E5139/1	659
2663	D23-D012A	1	26900	5.3	D.9	DEHUMIDIFIER	107E5139/1	659
2664	D23-F132A	1	26900	5.3	D.9	SO VALVE	107E5139/1	659
2665	D23-F510A	1	26900	5.3	D.9	AO VALVE	107E5139/1	659
2666	D23-F190A	1	26900	5.3	D.9	SO VALVE	107E5139/1	659
2667	D23-F202A	1	26900	5.3	D.9	AO VALVE	107E5139/1	659

Table 9A.6-2 Fire Hazard Analysis Equipment Database Sorted by Room — Reactor Building (Continued)

Item No.	MPL No	Elect Div.	Elev. Location	Location Number Coord.	Location Alpha Coord.	Description	System Drawing	Room No.
2668	D23-C003A	1	26900	5.3	D.9	ACC. SMPL.BOOSTER PUMP	107E5139/1	659
2669	D23-F191A	1	26900	5.3	D.9	SO VALVE	107E5139/1	659
2670	D23-D022A	1	26900	5.3	D.9	DRAIN MEAS VESSEL	107E5139/1	659
2671	D23-F201A	1	26900	5.3	D.9	AO VALVE	107E5139/1	659
2672	D23-F193A	1	26900	5.3	D.9	SO VALVE	107E5139/1	659
2673	D23-D010A	1	26900	5.3	D.9	STEAM SEPARATOR	107E5139/1	659
2674	D23-F197A	1	26900	5.3	D.9	SO VALVE	107E5139/1	659
2675	H22-P053A*	1	26900	5.3	D.9	D23, CAMS RACK A	107E5139/1	659
2676	H22-P054A*	1	26900	5.2	D.7	D23, CAMS CALIB RACK A	107E5139/1	659
2677	U41-D113	1	27200	5.3	D.7	CAMS (A) ROOM HVH	107E5189/0	659
2678	U41-C204B	2	27600	1.4	E.8	DG(B) HVAC SUPP FAN B	107E5189/0	663
2679	U41-C204F	2	27600	1.2	E.8	DG(B) HVAC SUPP FAN F	107E5189/0	663
2680	U41-TE056	2	27600	1.4	E.8	TEMP ELEMENT	107E5189/0	663
2681	P25-F022B	2	27600	1.2	F.3	TCV; DG B RM CLG	107E5182/0	663
2682	U41-C207C	3	27600	6.8	E.8	DG(C) HVAC SUPP FAN C	107E5189/0	673
2683	U41-C207G	3	27600	6.5	E.8	DG(C) HVAC SUPP FAN G	107E5189/0	673
2684	U41-TE060	3	27600	6.7	E.8	TEMP ELEMENT	107E5189/0	673
2685	P25-F022C	3	27600	6.7	F.3	TCV: DG C RM CLG	107E5182/0	673
2686	DELETED							
2687	DELETED							
2688	DELETED							
2689	DELETED							
2690	DELETED							
2691	H21-P009-01	N	27600	1.5	D.0	REMOTE COMM CABNET (C11)	103E1167	681
2692	H21-P009-03	N	27600	1.5	D.0	REMOTE COMM CABNET (C11)	103E1167	681
2693	H21-P009-05	N	27600	1.5	D.0	REMOTE COMM CABNET (C11)	103E1167	681
2694	H21-P009-07	N	27600	1.5	D.0	REMOTE COMM CABNET (C11)	103E1167	681
2695	H21-P009-09	N	27600	1.5	D.0	REMOTE COMM CABNET (C11)	103E1167	681
2696	H21-P009-11	N	27600	1.5	D.0	REMOTE COMM CABNET (C11)	103E1167	681

Table 9A.6-2 Fire Hazard Analysis Equipment Database Sorted by Room — Reactor Building (Continued)

Item No.	MPL No	Elect Div.	Elev. Location	Location Number Coord.	Location Alpha Coord.	Description	System Drawing	Room No.
2697	H21-P009-13	N	27600	1.5	D.0	REMOTE COMM CABNET (C11)	103E1167	681
2698	H21-P009-15	N	27600	1.5	D.0	REMOTE COMM CABNET (C11)	103E1167	681
2699	H21-P009-17	N	27600	1.5	D.0	REMOTE COMM CABNET (C11)	103E1167	681
2700	H21-P009-19	N	27600	1.5	D.0	REMOTE COMM CABNET (C11)	103E1167	681
2701	H21-P009-21	N	27600	1.5	D.0	REMOTE COMM CABNET (C11)	103E1167	681
2702	H21-P009-23	N	27600	1.5	D.0	REMOTE COMM CABNET (C11)	103E1167	681
2703	H21-P009-25	N	27600	1.5	D.0	REMOTE COMM CABNET (C11)	103E1167	681
2704	H21-P010-01	N1	27600	1.5	D.0	BREAK CTRL CABNET (C11)	103E1167	681
2705	H21-P010-03	N2	27600	1.5	D.0	BREAK CTRL CABNET (C11)	103E1167	681
2706	H21-P010-05	N3	27600	1.5	D.0	BREAK CTRL CABNET (C11)	103E1167	681
2707	H21-P011-01	N1	27600	1.5	D.0	FINE MOTION DR CAB (C11)	103E1167	681
2708	H21-P011-03	N1	27600	1.5	D.0	FINE MOTION DR CAB (C11)	103E1167	681
2709	H21-P011-05	N2	27600	1.5	D.0	FINE MOTION DR CAB (C11)	103E1167	681
2710	H21-P011-07	N2	27600	1.5	D.0	FINE MOTION DR CAB (C11)	103E1167	681
2711	H21-P011-09	N3	27600	1.5	D.0	FINE MOTION DR CAB (C11)	103E1167	681
2712	H21-P011-11	N3	27600	1.5	D.0	FINE MOTION DR CAB (C11)	103E1167	681
2713	H21-P011-13	N1	27600	1.5	D.0	FINE MOTION DR CAB (C11)	103E1167	681
2714	H21-P011-15	N1	27600	1.5	D.0	FINE MOTION DR CAB (C11)	103E1167	681
2715	H21-P011-17	N2	27600	1.5	D.0	FINE MOTION DR CAB (C11)	103E1167	681
2716	H21-P011-19	N2	27600	1.5	D.0	FINE MOTION DR CAB (C11)	103E1167	681
2717	H21-P011-21	N3	27600	1.5	D.0	FINE MOTION DR CAB (C11)	103E1167	681

Table 9A.6-2 Fire Hazard Analysis Equipment Database Sorted by Room — Reactor Building (Continued)

Item No.	MPL No	Elect Div.	Elev. Location	Location Number Coord.	Location Alpha Coord.	Description	System Drawing	Room No.
2718	H21-P011-23	N3	27600	1.5	D.0	FINE MOTION DR CAB (C11)	103E1167	681
2719	H21-P011-25	N1	27600	1.5	D.0	FINE MOTION DR CAB (C11)	103E1167	681
2720	H21-P011-27	N1	27600	1.5	D.0	FINE MOTION DR CAB (C11)	103E1167	681
2721	H21-P011-29	N2	27600	1.5	D.0	FINE MOTION DR CAB (C11)	103E1167	681
2722	H21-P011-31	N2	27600	1.5	D.0	FINE MOTION DR CAB (C11)	103E1167	681
2723	H21-P011-33	N3	27600	1.5	D.0	FINE MOTION DR CAB (C11)	103E1167	681
2724	H21-P011-35	N3	27600	1.5	D.0	FINE MOTION DR CAB (C11)	103E1167	681
2725	H21-P011-37	N1	27600	1.5	D.0	FINE MOTION DR CAB (C11)	103E1167	681
2726	H21-P011-39	N1	27600	1.5	D.0	FINE MOTION DR CAB (C11)	103E1167	681
2727	H21-P011-41	N2	27600	1.5	D.0	FINE MOTION DR CAB (C11)	103E1167	681
2728	H21-P011-43	N2	27600	1.5	D.0	FINE MOTION DR CAB (C11)	103E1167	681
2729	H21-P011-45	N3	27600	1.5	D.0	FINE MOTION DR CAB (C11)	103E1167	681
2730	H21-P011-47	N3	27600	1.5	D.0	FINE MOTION DR CAB (C11)	103E1167	681
2731	H21-P011-49	N1	27600	1.5	D.0	FINE MOTION DR CAB (C11)	103E1167	681
2732	H21-P011-51	N2	27600	1.5	D.0	FINE MOTION DR CAB (C11)	103E1167	681
2733	H21-P011-53	N3	27600	1.5	D.0	FINE MOTION DR CAB (C11)	103E1167	681
2734	H21-P012-01	N1	27600	1.5	D.0	FMCRD DISTR CAB (C11)	103E1167	681
2735	H21-P012-03	N1	27600	1.5	D.0	FMCRD DISTR CAB (C11)	103E1167	681
2736	H21-P012-05	N2	27600	1.5	D.0	FMCRD DISTR CAB (C11)	103E1167	681
2737	H21-P012-07	N2	27600	1.5	D.0	FMCRD DISTR CAB (C11)	103E1167	681
2738	H21-P012-09	N3	27600	1.5	D.0	FMCRD DISTR CAB (C11)	103E1167	681
2739	H21-P012-11	N3	27600	1.5	D.0	FMCRD DISTR CAB (C11)	103E1167	681
2740	H21-P013-01*	N	27600	1.5	D.0	FMCRD SCRAM TIME CAB	103E1167	681
2741	H21-P013-03*	N	27600	1.5	D.0	FMCRD SCRAM TIME CAB	103E1167	681

Table 9A.6-2 Fire Hazard Analysis Equipment Database Sorted by Room — Reactor Building (Continued)

Item No.	MPL No	Elect Div.	Elev. Location	Location Number Coord.	Location Alpha Coord.	Description	System Drawing	Room No.
2742	H21-P013-05*	N	27600	1.5	D.0	FMCRD SCRAM TIME CAB	103E1167	681
2743	R23 P/C EA10A	N	27600	1.5	D.0	P/C EA10 - LO VOLT SWTGR	107E5072/0	681
2744	R23 P/C EA10C	N	27600	1.5	D.0	P/C EA10 - LO VOLT SWTGR	107E5072/0	681
2745	U41-D121A-1	N	26000	4.7	A.1	R/A MS TUNNEL HVH A	107E5189/0	685
2746	U41-D121A-2	N	26000	4.7	A.1	R/A MS TUNNEL HVH A	107E5189/0	685
2747	U41-D121B-1	N	26000	4.4	A.1	R/A MS TUNNEL HVH B	107E5189/0	685
2748	U41-D121B-2	N	26000	4.4	A.1	R/A MS TUNNEL HVH B	107E5189/0	685
2749	E31-TE035A	N	26000	4.7	A.5	MSL TUN DIFF TEMP ELEM	103E1792/1	690
2750	E31-TE036A	N	26000	4.7	A.5	MSL TUN DIFF TEMP ELEM	103E1792/1	690
2751	T31-TE051A	N	23500	4.5	C.8	TEMP ELEMENT	107E6043/0	691
2752	T31-TE051B	N	23500	3.5	D.2	TEMP ELEMENT	107E6043/0	691
2753	T31-TE051C	N	23500	4.5	D.2	TEMP ELEMENT	107E6043/0	691
2754	T31-TE051J	N	27200	4.1	D.1	TEMP ELEMENT	107E6043/0	691
2755	T31-TE051K	N	27200	3.9	C.9	TEMP ELEMENT	107E6043/0	691
2756	E31-TE004	N	26000	4.0	E.0	DW AMB TEMP ELEMENT	103E1792/1	693
2757	P11-FQT106A	N	31700	6.2	A.7	FLOW XMTR (MUWP)	107E111/1	710
2758	P21-A001A	1	31700	6.8	A.6	RCW SURGE TANK (A)	107E5112/0	710
2759	P21-F018A	1	31700	6.8	A.6	MO GLOBE VALVE	107E5112/0	710
2760	P21-F019A	N	31700	6.8	A.7	AO GLOBE VALVE	107E5112/0	710
2761	P21-LT013A	1	31700	6.8	A.7	LVL XMTR (SURGE TK A)	107E5112/0	710
2762	P21-LT014A	1	31700	6.8	A.7	LVL XMTR (SURGE TK A)	107E5112/0	710
2763	P21-LT014D	1	31700	6.8	A.7	LVL XMTR (SURGE TK A)	107E5112/0	710
2764	P21-LT014G	1	31700	6.8	A.7	LVL XMTR (SURGE TK A)	107E5112/0	710
2765	U41-F001A	1	31700	6.1	A.4	AO VLV - R/A SUP ISO VLV	107E5189/0	710
2766	U41-F001B	2	31700	6.3	A.4	AO VLV - R/A SUP ISO VLV	107E5189/0	710
2767	U41-B301A	N	31700	6.6	B.1	COOLING COIL,RIP A	107E5189/0	715
2768	U41-B301B	N	31700	6.6	B.3	COOLING COIL,RIP A	107E5189/0	715
2769	U41-C301A	N	31700	6.6	B.1	RIP ZONE (A) SUPP FAN A	107E5189/0	715
2770	U41-C301B	N	31700	6.6	B.3	RIP ZONE (A) SUPP FAN B	107E5189/0	715
2771	U41-TE071A	N	31700	6.6	B.2	TEMP ELEMENT	107E5189/0	715
2772	U41-TE071B	N	31700	6.6	B.2	TEMP ELEMENT	107E5189/0	715
2773	U41-TE071C	N	31700	6.6	B.2	TEMP ELEMENT	107E5189/0	715

Table 9A.6-2 Fire Hazard Analysis Equipment Database Sorted by Room — Reactor Building (Continued)

Item No.	MPL No	Elect Div.	Elev. Location	Location Number Coord.	Location Alpha Coord.	Description	System Drawing	Room No.
2774	H23-P032*	N	31700	6.2	E.4	MULTIPLEXER	----?----	715
2775	H23-P033*	N	31700	6.2	E.5	MULTIPLEXER	----?----	715
2776	H23-P034*	N	31700	6.2	E.7	MULTIPLEXER	----?----	715
2777	P11-FQT106C	N	31700	6.2	E.3	FLOW XMTR (MUWP)	107E111/1	715
2778	P21-A001C	3	31700	6.7	E.5	RCW SURGE TANK (C)	107E5112/0	715
2779	P21-F018C	3	31700	6.8	E.5	MO GLOBE VALVE	107E5112/0	715
2780	P21-F019C	N	31700	6.8	E.5	AO GLOBE VALVE	107E5112/0	715
2781	P21-LT013C	3	31700	6.8	E.5	LVL XMTR (SURGE TK C)	107E5112/0	715
2782	P21-LT014C	3	31700	6.8	E.5	LVL XMTR (SURGE TK C)	107E5112/0	715
2783	P21-LT014F	3	31700	6.8	E.5	LVL XMTR (SURGE TK C)	107E5112/0	715
2784	P21-LT014J	3	31700	6.8	E.5	LVL XMTR (SURGE TK C)	107E5112/0	715
2785	R24 MCC SA110	N	31700	6.3	D.3	MCC SA110 - R/B	107E5072/0	715
2786	R24 MCC SA111	N	31700	6.3	D.3	MCC SA111 - R/B	107E5072/0	715
2787	D11-RE022A	1	31700	5.1	C.9	FUEL HANDLING AREA EXH.	107E6071/0	716
2788	D21-RE002	N	31700	5.2	C.8	AREA RAD DETECTOR	299X701-171/0	716
2789	U41-F003C	3	33000	5.2	A.5	MO VALVE	107E5189/0	716
2790	D21-RE006	N	31700	2.7	F.4	AREA RAD DETECTOR	299X701-171/0	721
2791	D11-RE022B	2	31700	2.8	E.8	FUEL HANDLING AREA EXH.	107E6071/0	721
2792	U41-D123-1	N	31700	1.7	E.8	REFUEL MACH CR HVH	107E5189/0	722
2793	U41-D123-2	N	31700	1.7	E.8	REFUEL MACH CR HVH	107E5189/0	722
2794	U41-TE015	N	31700	1.7	E.8	TEMP ELEMENT	107E5189/0	722
2795	U41-D131C	N	31700	1.5	E.1	RIP/FMCRD CP RM FCU C	107E5189/0	723
2796	U41-C208C	3	31700	6.6	F.5	DG(C) HVAC EXH FAN C	107E5189/0	730
2797	U41-C208G	3	31700	6.6	F.3	DG(C) HVAC EXH FAN G	107E5189/0	730
2798	U41-F006C	3	31700	6.6	F.5	MO VALVE	107E5189/0	730
2799	D11-RE022C	3	31700	5.1	E.8	FUEL HANDLING AREA EXH.	107E6071/0	733
2800	D21-RE003	N	31700	5.1	F.0	AREA RAD DETECTOR	299X701-171/0	733
2801	D21-RE004	N	31700	5.1	F.0	AREA RAD DETECTOR	299X701-171/0	733
2802	G41-LS001	N	31700	5.1	F.5	LEVEL SWITCH	107E6042/0	733
2803	G41-TE015	N	31700	5.1	F.5	TEMP ELEMENT	107E6042/0	733
2804	P11-FQT106B	N	31700	1.7	A.7	FLOW XMTR (MUWP)	107E111/1	740
2805	P21-A001B	2	31700	1.2	A.6	RCW SURGE TANK (B)	107E5112/0	740

Table 9A.6-2 Fire Hazard Analysis Equipment Database Sorted by Room — Reactor Building (Continued)

Item No.	MPL No	Elect Div.	Elev. Location	Location Number Coord.	Location Alpha Coord.	Description	System Drawing	Room No.
2806	P21-F018B	2	31700	1.2	A.6	MO GLOBE VALVE	107E5112/0	740
2807	P21-F019B	N	31700	1.2	A.6	AO GLOBE VALVE	107E5112/0	740
2808	P21-LT013B	2	31700	1.3	A.6	LVL XMTR (SURGE TK B)	107E5112/0	740
2809	P21-LT014B	2	31700	1.3	A.6	LVL XMTR (SURGE TK B)	107E5112/0	740
2810	P21-LT014E	2	31700	1.3	A.6	LVL XMTR (SURGE TK B)	107E5112/0	740
2811	P21-LT014H	2	31700	1.3	A.6	LVL XMTR (SURGE TK B)	107E5112/0	740
2812	U41-B302A	N	31700	1.4	B.1	COOLING COIL,RIP B	107E5189/0	740
2813	U41-B302B	N	31700	1.4	B.3	COOLING COIL,RIP B	107E5189/0	740
2814	U41-C302A	N	31700	1.4	B.1	RIP ZONE (B) SUPP FAN A	107E5189/0	740
2815	U41-C302B	N	31700	1.4	B.3	RIP ZONE (B) SUPP FAN B	107E5189/0	740
2816	U41-TE072A	N	31700	1.4	B.2	TEMP ELEMENT	107E5189/0	740
2817	U41-TE072B	N	31700	1.4	B.2	TEMP ELEMENT	107E5189/0	740
2818	U41-TE072C	N	31700	1.4	B.2	TEMP ELEMENT	107E5189/0	740
2819	D11-D304	N	31700	1.1	B.8	FILTER DEVICE	107E6071/0	740
2820	D11-D305	N	31700	1.1	B.8	FILTER DEVICE	107E6071/0	740
2821	D11-RE041A	N	31700	1.1	B.8	STACK RAD MON SCIN DET.	107E6071/0	740
2822	D11-RE041B	N	31700	1.1	B.8	STACK RAD MON SCIN DET.	107E6071/0	740
2823	D11-RE042	N	31700	1.1	B.8	STACK RAD MON Ge DET.	107E6071/0	740
2824	D11-RE043A	N	31700	1.1	B.8	STACK RAD ION CHAMBER	107E6071/0	740
2825	D11-RE043B	N	31700	1.1	B.8	STACK RAD ION CHAMBER	107E6071/0	740
2826	D11-RSM041A	N	31700	1.1	B.8	STACK GAS SAMPLER	107E6071/0	740
2827	D11-RSM041B	N	31700	1.1	B.8	STACK GAS SAMPLER	107E6071/0	740
2828	D11-RSM042	N	31700	1.1	B.8	STACK GAS SAMPLER	107E6071/0	740
2829	D11-SV301	N	31700	1.1	B.8	SOLENOID VALVE	107E6071/0	740
2830	D11-SV302	N	31700	1.1	B.8	SOLENOID VALVE	107E6071/0	740
2831	H21-P301	N	31700	1.1	B.8	D11,STACK RAD SIG CONV.	107E6071/0	740
2832	H21-P331	N	31700	1.1	B.8	D11,CONTROL SAMPL PNL.	107E6071/0	740
2833	H22-P251	N	31700	1.1	B.8	D11,STACK RAD SMPL RACK	107E6071/0	740
2834	H22-P252	N	31700	1.1	B.8	D11,STACK RAD SMPL RACK	107E6071/0	740

Table 9A.6-2 Fire Hazard Analysis Equipment Database Sorted by Room — Reactor Building (Continued)

Item No.	MPL No	Elect Div.	Elev. Location	Location Number Coord.	Location Alpha Coord.	Description	System Drawing	Room No.
2835	D11-RE022D	4	31700	2.8	D.0	FUEL HANDLING AREA EXH.	107E6071/0	742
2836	D21-RE001	N	31700	2.2	D.0	AREA RAD DETECTOR	299X701-171/0	742
2837	D21-RE005	N	31700	2.2	D.0	AREA RAD DETECTOR	299X701-171/0	742
2838	G41-FO38	N	32700	3.3	D.6	MO GATE VALVE	107E6042/0	743
2839	G41-LT020A	N	31700	4.7	D.8	LEVEL TRANSMITTER	107E6042/0	743
2840	G41-LT020B	N	31700	3.3	D.8	LEVEL TRANSMITTER	107E6042/0	743
2841	P11-FQT104	N	31700	3.2	C.5	FLOW XMTR (MUWP)	107E111/1	743
2842	D11-D041	N	38200	1.5	C.5	SAMPLING PROBE	107E6071/0	840
2843	D11-RE003A	1	38200	1.5	C.5	REA BLDG EX DETECTOR	107E6071/0	840
2844	D11-RE003B	2	38200	1.5	C.5	REA BLDG EX DETECTOR	107E6071/0	840
2845	D11-RE003C	3	38200	1.5	C.5	REA BLDG EX DETECTOR	107E6071/0	840
2846	D11-RE003D	4	38200	1.5	C.5	REA BLDG EX DETECTOR	107E6071/0	840
2847	U41-FT008	N	38200	1.5	C.5	FLOW TRANS	107E5189/0	840

Table 9A.6-3 Fire Hazard Analysis Equipment Data Base — Sorted by Room — Control Building

ITEM NO.	MPL NO.	ELECT DIV.	ELEV. LOCATION	LOCATION NUMBER COORD.	LOCATION ALPHA COORD.	DESCRIPTION	SYSTEM DRAWING	ROOM NO.
1	P21-C001A	1	-8200	3.70	K.6	RCW PUMP A	107E5112/0	111
2	P21-C001D	1	-8200	4.20	K.6	RCW PUMP D	107E5112/0	111
3	P21-F072A	1	-8200	3.80	K.2	AO BUTTERFLY VALVE	107E5112/0	111
4	P21-F072D	1	-8200	3.80	K.2	AO BUTTERFLY VALVE	107E5112/0	111
5	P21-F074A	1	-8200	3.80	K.2	MO GATE VALVE	107E5112/0	111
6	P21-F082A	1	-8200	3.80	K.2	MO GATE VALVE	107E5112/0	111
7	P21-F084A	1	-8200	3.80	K.2	MAN OPER GATE VALVE	107E5112/0	111
8	P21-F171A	N	-8200	3.80	K.2	MAN OPER GATE VALVE	107E5112/0	111
9	P21-F172A	N	-8200	3.80	K.2	MAN OPER GATE VALVE	107E5112/0	111
10	P21-FT042A	1	-8200	3.80	K.2	FLOW XMTR (C/B SUPPLY)	107E5112/0	111
11	P21-A002A	1	-8200	4.70	J.5	RCW CHEM ADD TANK A	107E5112/0	111
12	P21-F006A	1	-8200	4.80	K.8	AO BUTTERFLY VALVE	107E5112/0	111
13	P21-F010A	1	-8200	4.80	K.8	AO BUTTERFLY VALVE	107E5112/0	111
14	P21-FT006A	1	-8200	4.80	K.8	FLOW XMTR (RCW SUPPLY)	107E5112/0	111
15	P21-PT004A	1	-8200	4.80	K.8	PRESS XMTR (RCW SUPPLY)	107E5112/0	111
16	P21-TE005A	1	-8200	4.80	K.8	TEMP ELEM (RCW SUPPLY)	107E5112/0	111
17	P21-B001A	1	-8200	4.70	J.9	RCW/RSW HX A	107E5112/0	111
18	P21-B001D	1	-8200	4.70	K.2	RCW/RSW HX D	107E5112/0	111
19	P21-B001G	1	-8200	4.70	K.5	RCW/RSW HX G	107E5112/0	111
20	P21-E/P105A	1	-8200	4.50	K.5	E/P CONVERT (TCV-RCW)	107E5112/0	111
21	P21-F004A	1	-8200	4.60	J.9	MO GATE VALVE	107E5112/0	111
22	P21-F004D	1	-8200	4.60	K.2	MO GATE VALVE	107E5112/0	111
23	P21-F004G	1	-8200	4.60	K.5	MO GATE VALVE	107E5112/0	111
24	K17-C001AC	1	-8200	4.80	K.8	C/B RSW/RCW RM-SUMP A	107E5112/0	111
25	K17-LS401A	1	-8200	4.80	K.8	LEVEL SWITCH	107E5112/0	111
26	K17-LS401E	1	-8200	4.80	K.8	LEVEL SWITCH	107E5112/0	111
27	K17-LS401I	1	-8200	4.80	K.8	LEVEL SWITCH	107E5112/0	111
28	K17-LS401M	1	-8200	4.80	K.8	LEVEL SWITCH	107E5112/0	111
29	K17-LS402A	1	-8200	4.80	K.8	LEVEL SWITCH	107E5112/0	111
30	K17-LS402E	1	-8200	4.80	K.8	LEVEL SWITCH	107E5112/0	111
31	K17-LS402I	1	-8200	4.80	K.8	LEVEL SWITCH	107E5112/0	111
32	K17-LS402M	1	-8200	4.80	K.8	LEVEL SWITCH	107E5112/0	111
33	K17-LS403A	1	-8200	4.80	K.8	LEVEL SWITCH	107E5112/0	111

Table 9A.6-3 Fire Hazard Analysis Equipment Data Base — Sorted by Room — Control Building (Continued)

ITEM NO.	MPL NO.	ELECT DIV.	ELEV. LOCATION	LOCATION NUMBER COORD.	LOCATION ALPHA COORD.	DESCRIPTION	SYSTEM DRAWING	ROOM NO.
34	P21-C001B	2	-8200	1.90	K.6	RCW PUMP B	107E5112/0	121
35	P21-C001E	2	-8200	2.20	K.6	RCW PUMP E	107E5112/0	121
36	P21-E/P105B	2	-8200	2.50	K.5	E/P CONVERT (TCV-RCW)	107E5112/0	121
37	P21-F072B	2	-8200	1.90	K.2	AO BUTTERFLY VALVE	107E5112/0	121
38	P21-F072E	2	-8200	1.90	K.2	AO BUTTERFLY VALVE	107E5112/0	121
39	P21-F074B	2	-8200	1.90	K.2	MO GATE VALVE	107E5112/0	121
40	P21-F082B	2	-8200	1.90	K.2	MO GATE VALVE	107E5112/0	121
41	P21-F084B	2	-8200	1.90	K.2	MAN OPER GATE VALVE	107E5112/0	121
42	P21-F171B	N	-8200	1.90	K.2	MAN OPER GATE VALVE	107E5112/0	121
43	P21-F172B	N	-8200	1.90	K.2	MAN OPER GATE VALVE	107E5112/0	121
44	P21-FT042B	2	-8200	1.90	K.2	FLOW XMTR (C/B SUPPLY)	107E5112/0	121
45	P21-A002B	2	-8200	2.80	J.5	RCW CHEM ADD TANK B	107E5112/0	121
46	P21-F006B	2	-8200	2.80	K.8	AO BUTTERFLY VALVE	107E5112/0	121
47	P21-F010B	2	-8200	2.80	K.8	AO BUTTERFLY VALVE	107E5112/0	121
48	P21-FT006B	2	-8200	2.80	K.8	FLOW XMTR (RCW SUPPLY)	107E5112/0	121
49	P21-PT004B	2	-8200	2.80	K.8	PRESS XMTR (RCW SUPPLY)	107E5112/0	121
50	P21-TE005B	2	-8200	2.80	K.8	TEMP ELEM (RCW SUPPLY)	107E5112/0	121
51	P21-B001B	2	-8200	2.80	J.9	RCW/RSW HX B	107E5112/0	121
52	P21-B001E	2	-8200	2.80	K.2	RCW/RSW HX E	107E5112/0	121
53	P21-B001H	2	-8200	2.80	K.5	RCW/RSW HX H	107E5112/0	121
54	P21-F004B	2	-8200	2.70	J.9	MO GATE VALVE	107E5112/0	121
55	P21-F004E	2	-8200	2.70	K.2	MO GATE VALVE	107E5112/0	121
56	P21-F004H	2	-8200	2.70	K.5	MO GATE VALVE	107E5112/0	121
57	K17-C002BC	2	-8200	2.80	K.8	C/B RSW/RCW RM-SUMP B	107E5112/0	121
58	K17-LS001B	2	-8200	2.80	K.8	LEVEL SWITCH	107E5112/0	121
59	K17-LS001F	2	-8200	2.80	K.8	LEVEL SWITCH	107E5112/0	121
60	K17-LS001J	2	-8200	2.80	K.8	LEVEL SWITCH	107E5112/0	121
61	K17-LS001N	2	-8200	2.80	K.8	LEVEL SWITCH	107E5112/0	121
62	K17-LS002B	2	-8200	2.80	K.8	LEVEL SWITCH	107E5112/0	121
63	K17-LS002F	2	-8200	2.80	K.8	LEVEL SWITCH	107E5112/0	121
64	K17-LS002J	2	-8200	2.80	K.8	LEVEL SWITCH	107E5112/0	121
65	K17-LS002N	2	-8200	2.80	K.8	LEVEL SWITCH	107E5112/0	121
66	K17-LS003B	2	-8200	2.80	K.8	LEVEL SWITCH	107E5112/0	121
67	P21-C001C	3	-8200	5.30	K.6	RCW PUMP C	107E5112/0	131

Table 9A.6-3 Fire Hazard Analysis Equipment Data Base — Sorted by Room — Control Building (Continued)

ITEM NO.	MPL NO.	ELECT DIV.	ELEV. LOCATION	LOCATION NUMBER COORD.	LOCATION ALPHA COORD.	DESCRIPTION	SYSTEM DRAWING	ROOM NO.
68	P21-C001F	3	-8200	5.70	K.6	RCW PUMP F	107E5112/0	131
69	P21-E/P105C	3	-8200	5.90	K.5	E/P CONVERT (TCV-RCW)	107E5112/0	131
70	P21-F072C	3	-8200	5.40	K.2	AO BUTTERFLY VALVE	107E5112/0	131
71	P21-F072F	3	-8200	5.40	K.2	AO BUTTERFLY VALVE	107E5112/0	131
72	P21-F074C	3	-8200	5.40	K.2	MO GATE VALVE	107E5112/0	131
73	P21-F082C	3	-8200	5.40	K.2	MO GATE VALVE	107E5112/0	131
74	P21-F084C	3	-8200	5.40	K.2	MAN OPER GATE VALVE	107E5112/0	131
75	P21-F171C	N	-8200	5.40	K.2	MAN OPER GATE VALVE	107E5112/0	131
76	P21-F172C	N	-8200	5.40	K.2	MAN OPER GATE VALVE	107E5112/0	131
77	P21-FT042C	3	-8200	5.40	K.2	FLOW XMTR (C/B SUPPLY)	107E5112/0	131
78	P21-F006C	3	-8200	6.30	K.8	AO BUTTERFLY VALVE	107E5112/0	131
79	P21-F010C	3	-8200	6.30	K.8	AO BUTTERFLY VALVE	107E5112/0	131
80	P21-FT006C	3	-8200	6.30	K.8	FLOW XMTR (RCW SUPPLY)	107E5112/0	131
81	P21-PT004C	3	-8200	6.30	K.8	PRESS XMTR (RCW SUPPLY)	107E5112/0	131
82	P21-TE005C	3	-8200	6.30	K.8	TEMP ELEM (RCW SUPPLY)	107E5112/0	131
83	P21-B001C	3	-8200	6.20	J.9	RCW/RSW HX C	107E5112/0	131
84	P21-B001F	3	-8200	6.20	K.2	RCW/RSW HX F	107E5112/0	131
85	P21-B001J	3	-8200	6.20	K.5	RCW/RSW HX J	107E5112/0	131
86	P21-F004C	3	-8200	6.10	J.9	MO GATE VALVE	107E5112/0	131
87	P21-F004F	3	-8200	6.10	K.2	MO GATE VALVE	107E5112/0	131
88	P21-F004J	3	-8200	6.10	K.5	MO GATE VALVE	107E5112/0	131
89	P21-F025A	1	-2150	4.70	J.5	MO GLOBE VALVE	107E5112/0	217
90	P21-F025B	2	-2150	2.80	J.5	MO GLOBE VALVE	107E5112/0	227
91	P21-F025E	2	-2150	2.80	J.5	MO GLOBE VALVE	107E5112/0	227
92	P21-F025C	3	-2150	6.30	J.5	MO GLOBE VALVE	107E5112/0	237
93	P21-F025F	3	-2150	6.30	J.5	MO GLOBE VALVE	107E5112/0	237
94	R24 MCC A320	N	3500	3.80	K.6	MCC A320 - C/B	107E5072/0	311
95	R24 MCC SA120	N	3500	3.90	K.6	MCC SA120 - C/B	107E5072/0	311
96	R42 DCMCC N1	N	3500	3.80	K.6	250 VDC MCC N1	107E5075/0	311
97	R42-P001	N	3500	3.30	K.4	250 VDC CNTL DIST BD	107E5075/0	311
98	R42-P003	N	3500	3.80	K.4	250 VDC NORM CHARGER	107E5075/0	311
99	R42-P004	N	3500	3.80	K.2	250 VDC STBY CHARGER	107E5075/0	311

Table 9A.6-3 Fire Hazard Analysis Equipment Data Base — Sorted by Room — Control Building (Continued)

ITEM NO.	MPL NO.	ELECT DIV.	ELEV. LOCATION	LOCATION NUMBER COORD.	LOCATION ALPHA COORD.	DESCRIPTION	SYSTEM DRAWING	ROOM NO.
100	R46-CVCF AN21	N	3500	3.10	K.2	VITAL ND 120 VAC DIST-C/B	107E5076/0	311
101	R46-CVCF BN21	N	3500	3.10	K.5	VITAL ND 120 VAC DIST-C/B	107E5076/0	311
102	R46-CVCF CN21	N	3500	3.10	K.4	VITAL ND 120 VAC DIST-C/B	107E5076/0	311
103	R46-P002A	N	3500	3.20	J.6	COMPUTER CVCF PANEL	107E5076/0	311
104	R46-P002B	N	3500	3.70	J.6	COMPUTER CVCF PANEL	107E5076/0	311
105	P24-F222*	N	3500	3.70	K.7	TCV; NORM ELEC EQ RM	107E5176/0	311
106	U41-D133A	N	3500	3.60	K.8	NDIV ELEC EQ ZONE FCU	107E5189/0	311
107	K17-C002CC	3	-8200	6.30	K.8	C/B RSW/RCW RM - SUMP C	107E5189/0	311
108	K17-LS401C	3	-8200	6.30	K.8	LEVEL SWITCH	107E5189/0	131
109	K17-LS401G	3	-8200	6.30	K.8	LEVEL SWITCH	107E5189/0	131
110	K17-LS401K	3	-8200	6.30	K.8	LEVEL SWITCH	107E5189/0	131
111	K17-LS401O	3	-8200	6.30	K.8	LEVEL SWITCH	107E5189/0	131
112	K17-LS402C	3	-8200	6.30	K.8	LEVEL SWITCH	107E5189/0	131
113	K17-LS402G	3	-8200	6.30	K.8	LEVEL SWITCH	107E5189/0	131
114	K17-LS402K	3	-8200	6.30	K.8	LEVEL SWITCH	107E5189/0	131
115	K17-LS402O	3	-8200	6.30	K.8	LEVEL SWITCH	107E5189/0	131
116	K17-LS403C	3	-8200	6.30	K.8	LEVEL SWITCH	107E5189/0	131
117	R24 MCC C320	N	3500	5.40	K.6	MCC C320 - C/B	107E5072/0	317
118	R24 MCC E120	1	3500	5.40	K.6	MCC E120 - C/B	107E5072/0	317
119	R42-P005A	1	3500	5.80	J.8	BATT BUS - D1 125VDC	107E5075/0	317
120	R42-P006A	1	3500	5.80	J.9	125 VDC NORM CHARGER	107E5075/0	317
121	R42-P007A	1	3500	5.70	K.1	125 VDC CNTR DIST BD	107E5075/0	317
122	R42-P008A	1	3500	5.90	K.6	125 VDC STBY CHARGER	107E5075/0	317
123	R42-P021A*	1	3500	5.70	K.2	DC/DC CONVERTER - C/B	107E5075/0	317
124	R46-CVCF A21	1	3500	5.90	K.3	VITAL D1 120 VAC DIST-C/B	107E5076/0	317
125	R46-J002A1	1	3500	5.50	K.1	VITAL DIST PNL A1	107E5076/0	317
126	R46-J002A2	N	3500	5.20	K.3	VITAL DIST PNL (NON-1E)	107E5076/0	317
127	R46-P001A	1	3500	5.50	K.3	VITAL CVCF A10 - C/B	107E5076/0	317
128	R46-P011A	N	3500	5.20	K.3	VITAL CVCF AN10	107E5076/0	317
129	R47-POO1*	N	3500	5.40	K.7	120 VAC CNTL DIST BD -ND	112D4885/0	319
130	R24 MCC B320	N	3500	1.80	K.6	MCC B320 - C/B	107E5072/0	323
131	R24 MCC F120	2	3500	1.80	K.5	MCC F120 - C/B	107E5072/0	323

Table 9A.6-3 Fire Hazard Analysis Equipment Data Base — Sorted by Room — Control Building (Continued)

ITEM NO.	MPL NO.	ELECT DIV.	ELEV. LOCATION	LOCATION NUMBER COORD.	LOCATION ALPHA COORD.	DESCRIPTION	SYSTEM DRAWING	ROOM NO.
132	R42-P005B	2	3500	2.00	J.9	BATT BUS - D2 125VDC	107E5075/0	323
133	R42-P006B	2	3500	2.00	K.1	125 VDC NORM CHARGER	107E5075/0	323
134	R42-P007B	2	3500	1.90	K.3	125 VDC CNTR DIST BD	107E5075/0	323
135	R42-P008B	3	3500	2.40	K.1	125 VDC STBY CHARGER	107E5075/0	323
136	R42-P021B*	2	3500	2.40	J.9	DC/DC CONVERTER - C/B	107E5075/0	323
137	R46-CVCF A22	2	3500	1.80	K.3	VITAL D2 120 VAC DIST-C/B	107E5076/0	323
138	R46-J002B1	2	3500	2.30	K.4	VITAL DIST PNL B1	107E5076/0	323
139	R46-J002B2	N	3500	1.70	K.3	VITAL DIST PNL (NON-1E)	107E5076/0	323
140	R46-P001B	2	3500	2.30	K.4	VITAL CVCF B10 - C/B	107E5076/0	323
141	R46-P011B	N	3500	1.70	K.3	VITAL CVCF BN10	107E5076/0	323
142	R24 MCC G120	3	3500	6.10	K.4	MCC G120 - C/B	107E5072/0	331
143	R42-P005C	3	3500	6.30	K.1	BATT BUS - D3 125VDC	107E5075/0	331
144	R42-P006C	3	3500	6.30	J.9	125 VDC NORM CHARGER	107E5075/0	331
145	R42-P007C	3	3500	6.20	J.7	125 VDC CNTR DIST BD	107E5075/0	331
146	R42-P021C*	3	3500	6.20	J.8	DC/DC CONVERTER - C/B	107E5075/0	331
147	R46-CVCF A23	3	3500	6.40	K.4	VITAL D3 120 VAC DIST-C/B	107E5076/0	331
148	R46-J002C1	3	3500	6.30	K.4	VITAL DIST PNL C1	107E5076/0	331
149	R46-P001C	3	3500	6.40	K.4	VITAL CVCF C10 - C/B	107E5076/0	331
150	R42-P005D	4	3500	2.70	K.1	BATT BUS - D4 125VDC	107E5075/0	342
151	R42-P006D	4	3500	2.70	J.9	125 VDC NORM CHARGER	107E5075/0	342
152	R42-P007D	4	3500	2.70	J.7	125 VDC CNTR DIST BD	107E5075/0	342
153	R42-P021D*	4	3500	2.70	J.8	DC/DC CONVERTER - C/B	107E5075/0	342
154	R46-CVCF A24	4	3500	2.90	K.4	VITAL D4 120 VAC DIST-C/B	107E5076/0	342
155	R46-J002D1	4	3500	2.80	K.4	VITAL DIST PNL D1	107E5076/0	342
156	R46-P001D	4	3500	2.80	K.4	VITAL CVCF D10 - C/B	107E5076/0	342
157	P13-LT001A	1	7900	1.20	J.5	COND STOR TANK LEVEL	107E6014/0	491
158	P13-LT001B	2	7900	1.20	J.5	COND STOR TANK LEVEL	107E6014/0	491
159	P13-LT001C	3	7900	1.20	J.5	COND STOR TANK LEVEL	107E6014/0	491
160	P13-LT001D	4	7900	1.20	J.5	COND STOR TANK LEVEL	107E6014/0	491
161	H12-P003B*	2	7900	1.70	J.5	DIV 2 CONTROL PNLS	----?----	495
162	H12-P003D*	4	7900	2.80	K.0	DIV 4 CONTROL PNLS	----?----	495
163	H12-P004B	N	7900	2.20	K.0	NON DIV CONT.PNLS	----?----	495
164	H12-P001*	1234N	7900	3.70	K.0	MAIN CONTROL PANEL	----?----	496
165	H12-P002*	1234N	7900	3.20	K.0	? ? PANEL	----?----	496

Table 9A.6-3 Fire Hazard Analysis Equipment Data Base — Sorted by Room — Control Building (Continued)

ITEM NO.	MPL NO.	ELECT DIV.	ELEV. LOCATION	LOCATION NUMBER COORD.	LOCATION ALPHA COORD.	DESCRIPTION	SYSTEM DRAWING	ROOM NO.
166	H12-P003A*	1	7900	5.50	K.0	DIV 1 CONTROL PNLS	----?----	497
167	H12-P004A	N	7900	5.80	K.0	NON DIV CONT.PNLS	----?----	497
168	H12-P003C*	3	7900	6.30	J.5	DIV 3 CONTROL PNLS	----?----	497
169	C81-D001A*	N	12300	2.50	J.3	RIP MG SET A	107E5072	501
170	U41-D132A	N	12300	1.80	J.4	MG SET ROOM FCU A	107E5189/0	501
171	C81-P001A	N	12300	2.50	J.7	RIP MG A CONTROL PNL	----?----	502
172	C81-D001B*	N	12300	2.50	K.1	RIP MG SET B	107E5072	503
173	U41-D132B	N	12300	1.80	K.4	MG SET ROOM FCU B	107E5189/0	503
174	C81-P001B	N	12300	2.50	K.4	RIP MG B CONTROL PNL	----?----	504
175	B21-PT028A	1	12300	2.10	K.9	PRESS TRANSMITTER	795E877	506
176	B21-PT028B	2	12300	2.10	K.9	PRESS TRANSMITTER	795E877	506
177	B21-PT028C	3	12300	2.10	K.9	PRESS TRANSMITTER	795E877	506
178	B21-PT028D	4	12300	2.10	K.9	PRESS TRANSMITTER	795E877	506
179	B21-PT301A	1	12300	2.10	K.9	PRESS TRANSMITTER	795E877	506
180	B21-PT301B	2	12300	2.10	K.9	PRESS TRANSMITTER	795E877	506
181	B21-PT301C	3	12300	2.10	K.9	PRESS TRANSMITTER	795E877	506
182	B21-PT301D	4	12300	2.10	K.9	PRESS TRANSMITTER	795E877	506
183	P25-F016A	1	12300	5.20	K.6	TCV: C/B ELEC RM A	107E5182/0	511
184	U41-B603A	1	12300	5.20	K.5	ESS EQUIP RM COOL COIL	107E5189/0	511
185	U41-B603E	1	12300	5.20	K.5	ESS EQUIP RM COOL COIL	107E5189/0	511
186	U41-C604A	1	12300	5.20	K.1	EM ELEC (A) SUPP FAN A	107E5189/0	511
187	U41-C604E	1	12300	5.20	K.2	EM ELEC (A) SUPP FAN E	107E5189/0	511
188	U41-TE112A	1	12300	5.40	K.5	TEMP ELEMENT	107E5189/0	511
189	U41-TE113A	1	12300	5.40	K.5	TEMP ELEMENT	107E5189/0	511
190	P25-F016C	3	12300	6.10	K.6	TCV: C/B ELEC RM C	107E5182/0	531
191	U41-B605C	3	12300	5.80	K.5	ESS EQUIP RM COOL COIL	107E5189/0	531
192	U41-B605G	3	12300	5.80	K.5	ESS EQUIP RM COOL COIL	107E5189/0	531
193	U41-C608C	3	12300	6.00	K.1	EM ELEC (C) SUPP FAN C	107E5189/0	531
194	U41-C608G	3	12300	6.00	K.2	EM ELEC (C) SUPP FAN G	107E5189/0	531
195	U41-TE112C	3	12300	6.10	K.5	TEMP ELEMENT	107E5189/0	531
196	U41-TE113C	3	12300	6.10	K.5	TEMP ELEMENT	107E5189/0	531
197	P25-C001C	3	12300	6.00	J.2	HECW PUMP C	107E5182/0	534
198	P25-C001F	3	12300	6.70	J.2	HECW PUMP F	107E5182/0	534
199	P25-D001C	3	12300	6.00	J.2	HECW REFRIGERATOR C	107E5182/0	534

Table 9A.6-3 Fire Hazard Analysis Equipment Data Base — Sorted by Room — Control Building (Continued)

ITEM NO.	MPL NO.	ELECT DIV.	ELEV. LOCATION	LOCATION NUMBER COORD.	LOCATION ALPHA COORD.	DESCRIPTION	SYSTEM DRAWING	ROOM NO.
200	P25-D001G	3	12300	6.70	J.2	HECW REFRIGERATOR F	107E5182/0	534
201	P25-DPT007C	3	12300	5.70	J.6	DP XMTR (FLO CONT C/F)	107E5182/0	534
202	P25-F005C	3	12300	6.90	J.2	TCV: MCR CLG	107E5182/0	534
203	P25-F012C	3	12300	5.70	J.4	PCV: HECW UNITS C/F	107E5182/0	534
204	P25-FIS003C	3	12300	6.00	J.2	FLOW IND SWITCH C	107E5182/0	534
205	P25-FIS003F	3	12300	6.70	J.2	FLOW IND SWITCH F	107E5182/0	534
206	P25-TE005C	3	12300	6.00	J.2	TEMP ELEM (UNIT C/F)	107E5182/0	534
207	U41-C623C	3	12300	6.20	J.1	MCR RECIRC SUPP FAN C	107E5189/0	534
208	U41-C623G	3	12300	6.20	J.1	MCR RECIRC SUPP FAN G	107E5189/0	534
209	H11-P001*	N	12300	4.00	K.0	COMPUTER PANELS	----?----	591
210	P25-A002	N	12300	5.30	J.5	CHEMICAL FEED TANK	107E5182/0	593
211	P25-DPT007A	1	12300	5.30	J.2	DP XMTR (FLO CONT A/D)	107E5182/0	593
212	P25-TE005A	1	12300	5.30	J.2	TEMP ELEM (UNIT A/D)	107E5182/0	593
213	P25-C001A	1	17150	5.30	J.4	HECW PUMP A	107E5182/0	612
213a	P25-C001D	1	17150	5.30	J.4	HECW PUMP D	107E5182/0	612
214	P25-D001A	1	17150	5.30	J.4	HECW REFRIGERATOR A	107E5182/0	612
214a	P25-D001D	1	17150	5.30	J.4	HECW REFRIGERATOR D	107E5182/0	612
215	P25-F012A	1	17150	5.50	J.2	PCV: HECW UNIT A	107E5182/0	612
216	P25-FIS003A	1	17150	5.30	J.2	FLOW IND SWITCH A	107E5182/0	612
216a	P25-FIS003D	1	17150	5.30	J.2	FLOW IND SWITCH D	107E5182/0	612
217	U41-C605A	1	17150	5.20	K.5	EM ELEC (A) EXH FAN A	107E5189/0	613
218	U41-C605E	1	17150	5.20	K.6	EM ELEC (A) EXH FAN E	107E5189/0	613
219	DELETED							
220	U41-C622C	3	17150	5.70	K.5	MCR HVAC EXH FAN C	107E5189/0	614
221	U41-C622G	3	17150	5.70	K.6	MCR HVAC EXH FAN G	107E5189/0	614
222	U41-DPI106C	3	17150	5.70	K.5	DIFF PRESS INDICATOR	107E5189/0	614
223	U41-DPI107C	3	17150	5.70	K.5	DIFF PRESS INDICATOR	107E5189/0	614
224	U41-DPI108C	3	17150	5.70	K.5	DIFF PRESS INDICATOR	107E5189/0	614
225	U41-DPI109C	3	17150	5.70	K.5	DIFF PRESS INDICATOR	107E5189/0	614
226	U41-F009C	3	17150	5.70	K.5	MO VALVE	107E5189/0	615
227	U41-F009F	2	17150	5.70	K.6	MO VALVE	107E5189/0	615
228	U41-F010C	3	17150	5.70	K.5	MO VALVE	107E5189/0	614
229	U41-F010F	2	17150	5.70	K.6	MO VALVE	107E5189/0	614
230	DELETED							

Table 9A.6-3 Fire Hazard Analysis Equipment Data Base — Sorted by Room — Control Building (Continued)

ITEM NO.	MPL NO.	ELECT DIV.	ELEV. LOCATION	LOCATION NUMBER COORD.	LOCATION ALPHA COORD.	DESCRIPTION	SYSTEM DRAWING	ROOM NO.
231	U41-POT105C	3	17150	5.70	K.5	POSITION TRANSMITTER	107E5189/0	614
232	U41-POT105G	3	17150	5.70	K.6	POSITION TRANSMITTER	107E5189/0	614
233	U41-B601C	3	17150	6.80	J.3	MCR COOLING COIL	107E5189/0	615
234	U41-B601E	3	17150	6.80	J.3	MCR COOLING COIL	107E5189/0	615
235	U41-B601G	3	17150	6.80	J.3	MCR COOLING COIL	107E5189/0	615
236	U41-C621C	3	17150	6.70	J.5	MCR HVAC SUPP FAN C	107E5189/0	615
237	U41-C621G	3	17150	6.70	J.6	MCR HVAC SUPP FAN G	107E5189/0	615
238	U41-DPI101C	3	17150	6.80	J.3	DIFF PRESS INDICATOR	107E5189/0	615
239	U41-F007C	3	17150	6.80	J.1	MO VALVE	107E5189/0	615
240	U41-F007F	2	17150	6.90	J.1	MO VALVE	107E5189/0	615
241	U41-F008C	3	17150	6.80	J.1	MO VALVE	107E5189/0	615
242	U41-F011C	3	17150	6.60	J.1	MO VALVE	107E5189/0	615
243	U41-F008F	2	17150	6.90	J.1	MO VALVE	107E5189/0	615
244	U41-ME104C	3	17150	6.60	J.1	MOISTURE ELEMENT	107E5189/0	615
245	U41-TE103C	3	17150	6.60	J.1	TEMP ELEMENT	107E5189/0	615
246	U41-DPI111A	1	17150	5.20	K.8	DIFF PRESS INDICATOR	107E5189/0	619
247	U41-F104A	1	17150	5.20	K.8	MO VALVE	107E5189/0	619
248	U41-TE110A	1	17150	5.20	L.1	TEMP ELEMENT	107E5189/0	619
249	U41-F010F	2	17150	2.70	K.7	MO VALVE	107E5189/0	620
250	U41-POT105F	2	17150	2.70	K.7	POSITION TRANSMITTER	107E5189/0	620
251	U41-C601B	2	17150	1.30	J.5	MCR HVAC SUPP FAN B	107E5189/0	621
252	U41-C601F	2	17150	1.30	J.6	MCR HVAC SUPP FAN F	107E5189/0	621
253	P25-F005B	2	17150	1.10	J.2	TCV: MCR CLG	107E5182/0	621
254	U41-B601B	2	17150	1.10	J.3	MCR COOLING COIL	107E5189/0	621
255	U41-B601D	2	17150	1.10	J.3	MCR COOLING COIL	107E5189/0	621
256	U41-B601F	2	17150	1.10	J.3	MCR COOLING COIL	107E5189/0	621
257	U41-C603B	2	17150	1.80	J.1	MCR RECIRC SUPP FAN B	107E5189/0	621
258	U41-C603F	2	17150	1.80	J.1	MCR RECIRC SUPP FAN F	107E5189/0	621
259	U41-DPI101B	2	17150	1.10	J.3	DIFF PRESS INDICATOR	107E5189/0	621
260	U41-DPI106B	2	17150	1.80	J.1	DIFF PRESS INDICATOR	107E5189/0	621
261	U41-DPI107B	2	17150	1.80	J.1	DIFF PRESS INDICATOR	107E5189/0	621
262	U41-DPI108B	2	17150	1.80	J.1	DIFF PRESS INDICATOR	107E5189/0	621
263	U41-DPI109B	2	17150	1.80	J.1	DIFF PRESS INDICATOR	107E5189/0	621
264	U41-F007B	2	17150	1.10	J.1	MO VALVE	107E5189/0	621

Table 9A.6-3 Fire Hazard Analysis Equipment Data Base — Sorted by Room — Control Building (Continued)

ITEM NO.	MPL NO.	ELECT DIV.	ELEV. LOCATION	LOCATION NUMBER COORD.	LOCATION ALPHA COORD.	DESCRIPTION	SYSTEM DRAWING	ROOM NO.
265	U41-F007G	3	17150	1.10	J.1	MO VALVE	107E5189/0	621
266	U41-F008B	2	17150	1.10	J.1	MO VALVE	107E5189/0	621
267	U41-F008G	3	17150	1.10	J.1	MO VALVE	107E5189/0	621
268	U41-F009B	2	17150	1.80	J.1	MO VALVE	107E5189/0	621
269	U41-F009G	3	17150	1.80	J.1	MO VALVE	107E5189/0	621
270	U41-F011B	2	17150	1.50	J.1	MO VALVE	107E5189/0	621
271	U41-ME104B	2	17150	1.50	J.1	MOISTURE ELEMENT	107E5189/0	621
272	U41-TE103B	2	17150	1.50	J.1	TEMP ELEMENT	107E5189/0	621
273	P25-C001B	2	17150	2.80	J.4	HECW PUMP B	107E5182/0	623
274	P25-C001E	2	17150	2.80	J.8	HECW PUMP E	107E5182/0	623
275	P25-D001B	2	17150	2.80	J.4	HECW REFRIGERATOR B	107E5182/0	623
276	P25-D001E	2	17150	2.80	J.8	HECW REFRIGERATOR E	107E5182/0	623
277	P25-DPT007B	2	17150	2.30	J.2	DP XMTR (FLO CONT B/E)	107E5182/0	623
278	P25-F012B	2	17150	2.50	J.2	PCV: HECW UNITS B/E	107E5182/0	623
279	P25-FIS003B	2	17150	2.80	J.4	FLOW IND SWITCH B	107E5182/0	623
280	P25-FIS003E	2	17150	2.80	J.8	FLOW IND SWITCH E	107E5182/0	623
281	P25-TE005B	2	17150	2.80	J.4	TEMP ELEM (UNIT B/E)	107E5182/0	623
282	P25-F016B	2	17150	1.70	K.8	TCV: C/B ELEC RM B	107E5182/0	624
283	U41-B604B	2	17150	1.70	K.8	ESS EQUIP RM COOL COIL	107E5189/0	624
284	U41-B604F	2	17150	1.70	K.8	ESS EQUIP RM COOL COIL	107E5189/0	624
285	U41-C606B	2	17150	1.80	K.5	EM ELEC (B) SUPP FAN B	107E5189/0	624
286	U41-C606F	2	17150	1.80	K.6	EM ELEC (B) SUPP FAN F	107E5189/0	624
287	U41-DPI111B	2	17150	1.60	K.8	DIFF PRESS INDICATOR	107E5189/0	624
288	U41-F104B	2	17150	1.60	K.8	MO VALVE	107E5189/0	624
289	U41-TE110B	2	17150	1.60	L.1	TEMP ELEMENT	107E5189/0	624
290	U41-TE112B	2	17150	2.00	K.6	TEMP ELEMENT	107E5189/0	624
291	U41-C607B	2	17150	2.20	K.5	EM ELEC (B) EXH FAN B	107E5189/0	625
292	U41-C607F	2	17150	2.20	K.6	EM ELEC (B) EXH FAN F	107E5189/0	625
293	DELETED							
294	U41-TE113B	2	17150	2.20	K.5	TEMP ELEMENT	107E5189/0	625
295	U41-C602B	2	17150	2.70	K.5	MCR HVAC EXH FAN B	107E5189/0	626
296	U41-C602F	2	17150	2.70	K.6	MCR HVAC EXH FAN F	107E5189/0	626
297	U41-F010B	2	17150	2.70	K.5	MO VALVE	107E5189/0	626
297a	U41-F010G	3	17150	2.70	K.5	MO VALVE	107E5189/0	626

Table 9A.6-3 Fire Hazard Analysis Equipment Data Base — Sorted by Room — Control Building (Continued)

ITEM NO.	MPL NO.	ELECT DIV.	ELEV. LOCATION	LOCATION NUMBER COORD.	LOCATION ALPHA COORD.	DESCRIPTION	SYSTEM DRAWING	ROOM NO.
298	DELETED							
299	U41-POT105B	2	17150	2.70	K.5	POSITION TRANSMITTER	107E5189/0	626
300	U41-C609C	3	17150	6.20	K.5	EM ELEC (C) EXH FAN C	107E5189/0	631
301	U41-C609G	3	17150	6.20	K.6	EM ELEC (C) EXH FAN G	107E5189/0	631
302	DELETED							
303	U41-DPI111C	3	17150	5.80	K.8	DIFF PRESS INDICATOR	107E5189/0	653
304	U41-F104C	3	17150	5.80	K.8	MO VALVE	107E5189/0	653
305	U41-TE110C	3	17150	5.90	L.1	TEMP ELEMENT	107E5189/0	653

Table 9A.6-4 Fire Hazard Analysis Equipment Database—Sorted by Room—Turbine Building

MPL No.	Elec Div.	Elev. Loc.	Loc No. Coord	Loc Alpha Coord	Description	System Drawing	Room No.
D11-C001A*	N	350	2.4	G.3	PUMP	NP-1005256	110
D11-C001B*	N	350	2.8	G.3	PUMP	NP-1005256	110
D11-F402	N	350	2.4	G.3	MO VALVE	NP-1005256	110
D11-LIS064	N	350	2.6	G.2	LEVEL INDICATOR SWITCH	NP-1005256	110
D11-RE061	N	350	2.3	F.3	RADIATION DETECTOR	NP-1005256	112
D11-RE111A	N	350	2.6	F.6	RADIATION DETECTOR	NP-1005256	112
D11-RE111C	N	350	2.9	F.3	RADIATION DETECTOR	NP-1005256	112
D11-RE111D	N	350	2.4	F.9	RADIATION DETECTOR	NP-1005256	112
N22-C001B	N	350	3.5	G.3	HEATER DRAIN PUMP B	—?—	113
B21-PT301B	2	1500	6.2	D.8	PRESS TRANSMITTER	795E877	120
D21-RE026	N	3350	4.0	F.0	AREA RAD. DETECTOR	NP-1005274	120
B21-PT301D	4	1500	6.6	D.8	PRESS TRANSMITTER	795E877	120
B21-PT301A	1	1500	6.2	D.0	PRESS TRANSMITTER	795E877	120
B21-PT301C	3	1500	6.6	D.0	PRESS TRANSMITTER	795E877	120
D21-RE030	N	3350	6.2	G.5	AREA RAD DETECTOR	NP-1005274	130
N22-C001A	N	350	6.5	G.3	HEATER DRAIN PUMP A	—?—	130
N21-C001A	N	350	2.4	D.4	CONDENSATE PUMP A	—?—	140
N21-C001B	N	350	2.4	D.8	CONDENSATE PUMP B	—?—	140
N21-C001C	N	350	2.4	E.3	CONDENSATE PUMP C	—?—	140
N21-C001D	N	350	2.4	E.6	CONDENSATE PUMP D	—?—	140
K11-C051A	N	380	2.1	C.6	LCW PUMP FOR SUMP (A)	NT-5000339	142
K11-C051B	N	380	2.2	C.7	LCW PUMP FOR SUMP (A)	NT-5000339	142
K11-C051C	N	380	2.3	C.6	LCW PUMP FOR SUMP (B)	NT-5000339	142
K11-C051D	N	380	2.4	C.7	LCW PUMP FOR SUMP (B)	NT-5000339	142
K11-C151A	N	350	2.1	C.6	HCW SUMP PUMP	NT-5000339	142
K11-C151B	N	350	2.2	C.7	HCW SUMP PUMP	NT-5000339	142

Table 9A.6-4 Fire Hazard Analysis Equipment Database—Sorted by Room—Turbine Building (Continued)

MPL No.	Elec Div.	Elev. Loc.	Loc No. Coord	Loc Alpha Coord	Description	System Drawing	Room No.
K11-C151C	N	350	2.3	C.6	HCW SUMP PUMP	NT-5000339	142
K11-C151D	N	350	2.4	C.7	HCW SUMP PUMP	NT-5000339	142
K11-C351A	N	350	2.1	C.6	HCW SUMP PUMP	NT-5000339	142
K11-C351B	N	350	2.2	C.7	HCW SUMP PUMP	NT-5000339	142
K11-C351C	N	350	2.3	C.6	HCW SUMP PUMP	NT-5000339	142
K11-C351D	N	350	2.4	C.7	HCW SUMP PUMP	NT-5000339	142
K11-F160B	N	350	2.1	C.6	AO VALVE	NT-5000339	142
K11-F160D	N	350	2.2	C.6	AO VALVE	NT-5000339	142
K11-LS051A	N	350	2.3	C.7	LEVEL SWITCH	NT-5000339	142
K11-LS051B	N	350	2.4	C.7	LEVEL SWITCH	NT-5000339	142
K11-LS053A	N	350	2.1	C.6	LEVEL SWITCH	NT-5000339	142
K11-LS053B	N	350	2.2	C.6	LEVEL SWITCH	NT-5000339	142
K11-LS052A	N	350	2.3	C.7	LEVEL SWITCH	NT-5000339	142
K11-LS052B	N	350	2.4	C.7	LEVEL SWITCH	NT-5000339	142
K11-LS151A	N	350	2.1	C.6	LEVEL SWITCH	NT-5000339	142
K11-LS151B	N	350	2.2	C.7	LEVEL SWITCH	NT-5000339	142
K11-LS152A	N	350	2.3	C.6	LEVEL SWITCH	NT-5000339	142
K11-LS152B	N	350	2.4	C.7	LEVEL SWITCH	NT-5000339	142
K11-LS153A	N	350	2.1	C.6	LEVEL SWITCH	NT-5000339	142
K11-LS153B	N	350	2.2	C.7	LEVEL SWITCH	NT-5000339	142
K11-LS351A	N	350	2.3	C.6	LEVEL SWITCH	NT-5000339	142
K11-LS351B	N	350	2.4	C.7	LEVEL SWITCH	NT-5000339	142
K11-LS352A	N	350	2.1	C.6	LEVEL SWITCH	NT-5000339	142
K11-LS352B	N	350	2.2	C.7	LEVEL SWITCH	NT-5000339	142
K11-LS353A	N	350	2.3	C.6	LEVEL SWITCH	NT-5000339	142
K11-LS353B	N	350	2.4	C.7	LEVEL SWITCH	NT-5000339	142
U63-C001	N	350	2.2	C.7	STORM DRAIN SUMP PUMP	NT-1008587	142
U63-C002	N	350	2.2	C.7	STORM DRAIN SUMP PUMP	NT-1008587	142

Table 9A.6-4 Fire Hazard Analysis Equipment Database—Sorted by Room—Turbine Building (Continued)

MPL No.	Elec Div.	Elev. Loc.	Loc No. Coord	Loc Alpha Coord	Description	System Drawing	Room No.
U63-C003	N	350	2.2	C.7	STORM DRAIN SUMP PUMP	NT-1008587	142
U63-C004	N	350	2.2	C.7	STORM DRAIN SUMP PUMP	NT-1008587	142
U63-LS011	N	350	2.2	C.7	LEVEL SWITCH	NT-1008587	142
U63-LS012	N	350	2.2	C.7	LEVEL SWITCH	NT-1008587	142
U63-LS021	N	350	2.2	C.7	LEVEL SWITCH	NT-1008587	142
U63-LS022	N	350	2.2	C.7	LEVEL SWITCH	NT-1008587	142
U63-LS031	N	350	2.2	C.7	LEVEL SWITCH	NT-1008587	142
U63-LS032	N	350	2.2	C.7	LEVEL SWITCH	NT-1008587	142
U63-LS041	N	350	2.2	C.7	LEVEL SWITCH	NT-1008587	142
U63-LS042	N	350	2.2	C.7	LEVEL SWITCH	NT-1008587	142
H21-P130F	N	350	3.6	C.7	LOCAL PANEL	NP-1005256	144
H22-P254	N	350	3.6	C.6	LOCAL PANEL	NP-1005256	144
K21-A051	N	3850	3.6	C.7	CF BACKWASH WATER TANK	NT-1008603	144
K21-LE051	N	350	3.6	C.6	LEVEL ELEMENT	NT-1008603	144
K21-LI051	N	350	3.6	C.7	LEVEL INDICATOR	NT-1008603	144
K21-LT051	N	350	3.6	C.6	LEVEL TRANSMITTER	NT-1008603	144
K21-C051A	N	350	3.7	C.6	CF PUMP	NT-1008603	144
K21-C051B	N	350	3.7	C.7	CF PUMP	NT-1008603	144
K21-F051	N	350	3.7	C.6	AO VALVE	NT-1008603	144
K21-F052	N	350	3.7	C.7	AO VALVE	NT-1008603	144
K21-F055	N	350	3.8	C.6	AO VALVE	NT-1008603	144
K21-F057	N	350	3.8	C.7	AO VALVE	NT-1008603	144
R10-M/C A1	N	7350	0.3	H.0	MED. VOLTAGE SWITCHGEAR	10Q214-133	210
R10-M/C A2	N	7350	0.3	K.0	MED. VOLTAGE SWITCHGEAR	10Q214-133	210
R10 MCC A1	N	7350	0.5	J.0	MOTOR CONTROL CENTER	10Q214-133	210

Table 9A.6-4 Fire Hazard Analysis Equipment Database—Sorted by Room—Turbine Building (Continued)

MPL No.	Elec Div.	Elev. Loc.	Loc No. Coord	Loc Alpha Coord	Description	System Drawing	Room No.
R10 MCC A1	N	7350	0.5	J.0	MOTOR CONTROL CENTER	10Q214-133	210
R10 MCC A2	N	7350	0.5	J.0	MOTOR CONTROL CENTER	10Q214-133	210
R10 MCC A2	N	7350	0.5	J.0	MOTOR CONTROL CENTER	10Q214-133	210
R10-P/C A1	N	7350	0.8	H.0	LOW VOLTAGE SWITCHGEAR	10Q214-133	210
R10-P/C A2	N	7350	0.8	J.0	LOW VOLTAGE SWITCHGEAR	10Q214-133	210
R10-P/C SA	N	7350	0.8	H.0	LOW VOLTAGE SWITCHGEAR	10Q214-133	210
U41-C104A*	N	7350	0.5	J.0	BATTERY RM. EXHAUST FAN	SSAR FIG. 9.4-2B	210
U41-C104B*	N	7350	0.5	J.0	BATTERY RM. EXHAUST FAN	SSAR FIG. 9.4-2B	210
U41-C108A*	N	7350	0.5	J.0	LUBE OIL AREA EXHAUST FAN	SSAR FIG. 9.4-2B	210
U41-C108B*	N	7350	0.5	J.0	LUBE OIL AREA EXHAUST FAN	SSAR FIG. 9.4-2B	210
D11-RE051	N	7350	2.2	F.2	RADIATION DETECTOR	NP-1005256	211
D11-RE052	N	7350	2.2	F.5	RADIATION DETECTOR	NP-1005256	211
D11-RE055	N	7350	2.2	F.7	RADIATION DETECTOR	NP-1005256	211
D11-RE081	N	7350	2.5	F.2	OFF GAS DETECTOR	NP-1005256	211
D11-RE082	N	7350	2.5	F.6	OFF GAS DETECTOR	NP-1005256	211
D11-RE091A	N	7350	2.5	F.8	OFF GAS DETECTOR	NP-1005256	211
D11-RE091B	N	7350	2.8	F.2	OFF GAS DETECTOR	NP-1005256	211
D11-RE101	N	7350	2.8	F.5	OFF GAS DETECTOR	NP-1005256	211
C31-FT401A	N	14750	2.4	K.3	FLOW TRANSMITTER	796E361	213
C31-FT401B	N	14750	2.8	K.3	FLOW TRANSMITTER	796E361	213
C31-FT402A	N	14750	3.1	K.3	FLOW TRANSMITTER	796E361	213
C31-FT402B	N	14750	3.4	K.3	FLOW TRANSMITTER	796E361	213
C31-FT413	N	7350	3.5	J.5	FLOW TRANSMITTER	796E361	215

Table 9A.6-4 Fire Hazard Analysis Equipment Database—Sorted by Room—Turbine Building (Continued)

MPL No.	Elec Div.	Elev. Loc.	Loc No. Coord	Loc Alpha Coord	Description	System Drawing	Room No.
N38-C001C	N	7350	3.5	J.0	MAIN FEED PUMP B	—?—	215
C31-FT412B	N	7350	4.5	J.5	FLOW TRANSMITTER	796E361	215
N38-C001B	N	7350	4.5	J.0	STBY FEEDWATER PUMP	—?—	215
C31-FT412A	N	7350	5.5	J.5	FLOW TRANSMITTER	796E361	215
D21-RE029	N	10350	5.8	J.0	AREA RAD DETECTOR	NP-1005274	215
N38-C001A	N	7350	5.5	J.0	REACT. FEEDWATER PUMP A	—?—	215
D11-D081	N	7350	2.4	G.1	AIR PURGE SET	NP-1005256	218
D11-D091	N	7350	2.6	G.1	AIR PURGE SET	NP-1005256	218
D11-D092	N	7350	2.8	G.1	AIR PURGE SET	NP-1005256	218
D11-F604	N	7350	2.4	G.2	SO VALVE	NP-1005256	218
D11-F606	N	7350	2.6	G.2	SO VALVE	NP-1005256	218
D11-F610	N	7350	2.8	G.2	SO VALVE	NP-1005256	218
D11-F709	N	7350	2.4	G.2	SO VALVE	NP-1005256	218
D11-F717	N	7350	2.6	G.2	SO VALVE	NP-1005256	218
D11-RAM081	N	7350	2.1	G.1	OFF GAS PREAMPLIFIER	NP-1005256	218
D11-RAM082	N	7350	2.9	G.1	OFF GAS PREAMPLIFIER	NP-1005256	218
D11-RSM091	N	7350	2.2	G.1	RAD SAMPLE MONITOR	NP-1005256	218
D11-RSM091	N	7350	2.4	G.1	RAD SAMPLE MONITOR	NP-1005256	218
D21-RE031	N	10350	2.5	G.1	AREA RAD DETECTOR	NP-1005274	218
H21-P307	N	7350	2.1	G.2	LOCAL PANEL	NP-1005256	218
H21-P308	N	7350	2.2	G.2	LOCAL PANEL	NP-1005256	218
H22-P255	N	7350	2.5	G.2	LOCAL RACK	NP-1005256	218
H22-P256	N	7350	2.6	G.2	LOCAL RACK	NP-1005256	218
H22-P257	N	7350	2.3	G.2	LOCAL RACK	NP-1005256	218
H22-P258	N	7350	2.4	G.2	LOCAL RACK	NP-1005256	218
D11-D101	N	12850	2.4	G.1	DEHUMIDIFIER	NP-1005256	218
D11-D102	N	12850	2.6	G.1	AIR PURGE SET	NP-1005256	218

Table 9A.6-4 Fire Hazard Analysis Equipment Database—Sorted by Room—Turbine Building (Continued)

MPL No.	Elec Div.	Elev. Loc.	Loc No. Coord	Loc Alpha Coord	Description	System Drawing	Room No.
D11-F807	N	12850	2.4	G.2	SO VALVE	NP-1005256	218
D11-F809	N	12850	2.6	G.2	SO VALVE	NP-1005256	218
D11-RSM101	N	12850	2.2	G.1	RAD SAMPLE MONITOR	NP-1005256	218
H21-P331-2	N	11850	2.5	G.2	LOCAL PANEL	NP-1005256	218
H21-P339-1	N	11850	2.6	G.2	LOCAL PANEL	NP-1005256	218
E31-TE021A	1	14750	2.5	K.8	MSL TEMPERATURE SENSOR	795E877	219
E31-TE021B	2	14750	2.8	K.8	MSL TEMPERATURE SENSOR	795E877	219
E31-TE021C	3	14750	3.2	K.8	MSL TEMPERATURE SENSOR	795E877	219
E31-TE021D	4	14750	3.4	K.8	MSL TEMPERATURE SENSOR	795E877	219
E31-TE022A	1	15100	2.5	K.8	TEMPERATURE ELEMENT	795E877	219
E31-TE022B	2	15100	2.8	K.8	TEMPERATURE ELEMENT	795E877	219
E31-TE022C	3	15100	3.2	K.8	TEMPERATURE ELEMENT	795E877	219
E31-TE022D	4	15100	3.4	K.8	TEMPERATURE ELEMENT	795E877	219
E31-TE023A	1	15450	2.5	K.8	TEMPERATURE ELEMENT	795E877	219
E31-TE023B	2	15450	2.8	K.8	TEMPERATURE ELEMENT	795E877	219
E31-TE023C	3	15450	3.2	K.8	TEMPERATURE ELEMENT	795E877	219
E31-TE023D	4	15450	3.4	K.8	TEMPERATURE ELEMENT	795E877	219
E31-TE024A	1	15800	2.5	K.8	TEMPERATURE ELEMENT	795E877	219
E31-TE024B	2	15800	2.8	K.8	TEMPERATURE ELEMENT	795E877	219
E31-TE024C	3	15800	3.2	K.8	TEMPERATURE ELEMENT	795E877	219
E31-TE024D	4	15800	3.4	K.8	TEMPERATURE ELEMENT	795E877	219
E31-TE025A	1	16150	2.5	K.8	TEMPERATURE ELEMENT	795E877	219
E31-TE025B	2	16150	2.8	K.8	TEMPERATURE ELEMENT	795E877	219
E31-TE025C	3	16150	3.2	K.8	TEMPERATURE ELEMENT	795E877	219
E31-TE025D	4	16150	3.4	K.8	TEMPERATURE ELEMENT	795E877	219
E31-TE026A	1	16500	2.5	K.8	TEMPERATURE ELEMENT	795E877	219
E31-TE026B	2	16500	2.8	K.8	TEMPERATURE ELEMENT	795E877	219

Table 9A.6-4 Fire Hazard Analysis Equipment Database—Sorted by Room—Turbine Building (Continued)

MPL No.	Elec Div.	Elev. Loc.	Loc No. Coord	Loc Alpha Coord	Description	System Drawing	Room No.
E31-TE026C	3	16500	3.2	K.8	TEMPERATURE ELEMENT	795E877	219
E31-TE026D	4	16500	3.4	K.8	TEMPERATURE ELEMENT	795E877	219
E31-TE027A	1	16850	2.5	K.8	TEMPERATURE ELEMENT	795E877	219
E31-TE027B	2	16850	2.8	K.8	TEMPERATURE ELEMENT	795E877	219
E31-TE027C	3	16850	3.2	K.8	TEMPERATURE ELEMENT	795E877	219
E31-TE027D	4	16850	3.4	K.8	TEMPERATURE ELEMENT	795E877	219
E31-TE028A	1	17100	2.5	K.8	TEMPERATURE ELEMENT	795E877	219
E31-TE028B	2	17100	2.8	K.8	TEMPERATURE ELEMENT	795E877	219
E31-TE028C	3	17100	3.2	K.8	TEMPERATURE ELEMENT	795E877	219
E31-TE028D	4	17100	3.4	K.8	TEMPERATURE ELEMENT	795E877	219
E31-TE029A	1	17450	2.5	K.8	TEMPERATURE ELEMENT	795E877	219
E31-TE029B	2	17450	2.8	K.8	TEMPERATURE ELEMENT	795E877	219
E31-TE029C	3	17450	3.2	K.8	TEMPERATURE ELEMENT	795E877	219
E31-TE029D	4	17450	3.4	K.8	TEMPERATURE ELEMENT	795E877	219
D21-RE028	N	10350	5.0	C.0	AREA RAD DETECTOR	NP-1005274	221
U41-C103*	N	7350	5.0	G.5	CONDENS.AREA COOLER FAN	SSAR FIG. 9.4-2A	223
P22-F001*	N	7350	6.7	B.2	A O VALVE	10Q225-337	224
P22-F002*	N	7350	6.7	B.4	A O VALVE	10Q225-337	224
P22-F003*	N	7350	6.7	B.6	A O VALVE	10Q225-337	224
P22-F004*	N	7350	6.8	B.2	A O VALVE	10Q225-337	224
P22-FOO5*	N	7350	6.8	B.4	A O VALVE	10Q225-337	224
U41-C109*	N	7350	6.5	K.5	LUBE OIL AREA COOLER FN	SSAR FIG. 9.4-2B	230
U41-TC003*	N	7350	6.5	K.5	TEMPERTURE CONTROLLER	SSAR FIG. 9.4-2B	230
H21-P341	N	7350	6.5	J.5	LOCAL PANEL	NP-1005256	231
C71-PS002A	1	8000	6.2	H.2	PRESSURE SWITCH	103E1577	232
C71-PS002B	2	8000	6.2	H.4	PRESSURE SWITCH	103E1577	232
C71-PS002C	3	8000	6.7	H.2	PRESSURE SWITCH	103E1577	232
C71-PS002D	4	8000	6.7	6.4	PRESSURE SWITCH	103E1577	232

Table 9A.6-4 Fire Hazard Analysis Equipment Database—Sorted by Room—Turbine Building (Continued)

MPL No.	Elec Div.	Elev. Loc.	Loc No. Coord	Loc Alpha Coord	Description	System Drawing	Room No.
H21-P340	N	7350	6.5	G.8	LOCAL PANEL	NP-1005274	233
D21-RE027	N	10350	6.0	A.5	AREA RAD DETECTOR	NP-1005274	240
D21-RE032	N	10350	4.2	C.0	AREA RAD DETECTOR	NP-1005274	245
H21-P306	N	7350	2.5	D.5	LOCAL PANEL	NP-1005256	246
H22-P259	N	7350	2.4	D.4	LOCAL RACK	NP-1005256	246
H22-P260	N	7350	2.5	E.5	LOCAL RACK	NP-1005256	246
P21-F143	N	7350	2.5	E.9	MO GLOBE VALVE	NT-1006578	246
P24-A001	N	7350	0.5	F.0	CHEMICAL ADDITION TANK	10Q225-337	248
P24-C001A	N	7350	0.8	E.3	PUMP	10Q225-337	248
P24-C001B	N	7350	0.8	E.8	PUMP	10Q225-337	248
P24-C001C	N	7350	0.5	E.5	PUMP	10Q225-337	248
P24-C001D	N	7350	0.8	F.8	PUMP	10Q225-337	248
P24-COO1E	N	7350	0.6	F.8	PUMP	10Q225-337	248
P24-D001A	N	7350	0.8	E.4	CHILLER	10Q225-337	248
P24-D001B	N	7350	0.8	E.9	CHILLER	10Q225-337	248
P24-D001C	N	7350	0.4	E.9	CHILLER	10Q225-337	248
P24-D001D	N	7350	0.8	F.7	CHILLER	10Q225-337	248
P24-D001E	N	7350	0.4	F.7	CHILLER	10Q225-337	248
P24-FS003A	N	7350	0.8	E.4	FLOW SWITCH	10Q225-337	248
P24-FS003B	N	7350	0.8	E.9	FLOW SWITCH	10Q225-337	248
P24-FS003C	N	7350	0.4	E.9	FLOW SWITCH	10Q225-337	248
P24-FS003D	N	7350	0.8	F.7	FLOW SWITCH	10Q225-337	248
P24-FS003E	N	7350	0.4	F.7	FLOW SWITCH	10Q225-337	248
R10-M/C B1	N	15350	0.3	H.00	MED. VOLTAGE SWITCHGEAR	10Q214-133	310
R10 MCC B11	N	15350	0.5	J.00	MOTOR CONTROL CENTER	10Q214-133	310
R10 MCC B12	N	15350	0.5	J.00	MOTOR CONTROL CENTER	10Q214-133	310
R10 MCC B21	N	15350	0.5	J.00	MOTOR CONTROL CENTER	10Q214-133	310

Table 9A.6-4 Fire Hazard Analysis Equipment Database—Sorted by Room—Turbine Building (Continued)

MPL No.	Elec Div.	Elev. Loc.	Loc No. Coord	Loc Alpha Coord	Description	System Drawing	Room No.
R10 MCC B22	N	15350	0.5	J.00	MOTOR CONTROL CENTER	10Q214-133	310
R10-P/C B1	N	15350	0.8	H.0	LOW VOLTAGE SWITCHGEAR	10Q214-133	310
R10-P/C B2	N	15350	0.8	J.0	LOW VOLTAGE SWITCHGEAR	10Q214-133	310
R10-P/C SB	N	15350	0.8	H.0	LOW VOLTAGE SWITCHGEAR	10Q214-133	310
U41-C105A*	N	15350	0.5	J.0	SWGR.,AIR COMPRESSOR EXHAUST FAN	SSAR FIG. 9.4-2B	300
U41-C105B*	1	15350	0.5	J.0	SWGR.,AIR COMPRESSOR EXHAUST FAN	SSAR FIG. 9.4-2B	300
U41-C106A*	2	15350	0.5	J.0	SWGR.,AIR COMPRESSOR SUPPLY FAN	SSAR FIG. 9.4-2B	300
U41-C106B*	3	15350	0.5	J.0	SWGR.,AIR COMPRESSOR SUPPLY FAN	SSAR FIG. 9.4-2B	300
U41-C107*	N	15350	0.5	J.0	SWGR.,AIR COMPRESSOR ROOM COOLING FAN	SSAR FIG. 9.4-2B	300
U41-TC001*	N	15350	0.5	J.0	TEMPERTURE CONTROLLER	SSAR FIG. 9.4-2B	310
U41-TC002*	N	15350	0.5	J.0	TEMPERTURE CONTROLLER	SSAR FIG. 9.4-2B	310
R10-M/C B2	N	15350	0.3	K.0	MED. VOLTAGE SWITCHGEAR	10Q214-133	310
D11-RE111B	N	15350	2.5	F.5	RADIATION DETECTOR	NP-1005256	311
N33-C001	N	15350	2.5	J.5	MECH. VACUUM PUMP	—?—	315
U41-C102*	N	15350	2.1	J.2	MECH.EQUIP. RM. COOLER	SSAR FIG. 9.4-2A	310
N71-C001A	N	15350	0.5	F.0	CIRCUL. WATER PUMP A	—?—	317
N71-C001B	N	15350	0.5	F.0	CIRCUL. WATER PUMP B	—?—	317
N71-C001C	N	15350	0.5	F.0	CIRCUL. WATER PUMP C	—?—	317

Table 9A.6-4 Fire Hazard Analysis Equipment Database—Sorted by Room—Turbine Building (Continued)

MPL No.	Elec Div.	Elev. Loc.	Loc No. Coord	Loc Alpha Coord	Description	System Drawing	Room No.
P22-C001A	N	15350	6.7	B.3	TCW PUMP A	—?—	320
P22-C001B	N	15350	6.7	B.6	TCW PUMP B	—?—	320
P22-C001C	N	15350	6.7	B.9	TCW PUMP C	*—?—	320
D21-RE033	N	18350	5.7	J.5	AREA RAD DETECTOR	NP-1005274	331
B21-PT028A	1	17000	4.6	K.0	PRESSURE TRANSMITTER	795EE877	333
B21-PT028B	2	17000	4.8	K.0	PRESSURE TRANSMITTER	795EE877	333
B21-PT028C	3	17000	5.2	K.0	PRESSURE TRANSMITTER	795EE877	333
B21-PT028D	4	17000	5.4	K.0	PRESSURE TRANSMITTER	795EE877	333
C71-PoS001	1	22000	4.6	H.6	POSITION SWITCH	103E1577	334
C71-PoS001	2	22000	4.8	H.6	POSITION SWITCH	103E1577	334
C71-PoS001	3	22000	5.2	H.6	POSITION SWITCH	103E1577	334
C71-PoS001	4	22000	5.4	H.6	POSITION SWITCH	103E1577	334
C71-PoS004	1	22000	4.6	H.7	POSITION SWITCH	103E1577	334
C71-PoS004	2	22000	4.8	H.7	POSITION SWITCH	103E1577	334
C71-PoS004	3	22000	5.2	H.7	POSITION SWITCH	103E1577	334
C71-PoS004	4	22000	5.4	H.7	POSITION SWITCH	103E1577	334
D21-RE026	N	33350	4.0	F.0	AREA RAD DETECTOR	NP-1005274	410
U31-B001	N	25350	4.0	F.0	CRANE	—?—	410
U31-B002	N	25350	4.0	F.0	CRANE	—?—	410
U41-C001A*	N	25350	2.0	F.0	T/B EXHAUST FAN	SSAR FIG. 9.4-2A	412
U41-C100B*	N	25350	2.0	F.0	T/B EXHAUST FAN	SSAR FIG. 9.4-2A	412
U41-C100C*	N	25350	2.0	F.0	T/B EXHAUST FAN	SSAR FIG. 9.4-2A	412
U41-C101A*	N	25350	2.0	J.0	T/B EXHAUST FAN	SSAR FIG. 9.4-2A	412
U41-C101B*	N	25350	2.0	J.0	T/B EXHAUST FAN	SSAR FIG. 9.4-2A	412

Table 9A.6-4 Fire Hazard Analysis Equipment Database—Sorted by Room—Turbine Building (Continued)

MPL No.	Elec Div.	Elev. Loc.	Loc No. Coord	Loc Alpha Coord	Description	System Drawing	Room No.
U41-C101C*	N	25350	2.0	J.0	T/B EXHAUST FAN	SSAR FIG. 9.4-2A	412
N43-C001	N	25350	5.0	B.5	GEN STAT COOL WATER PMP	---?---	420
C71-PT003A	1	25350	5.3	H.3	PRSSURE TRANSMITTER	103E1577	431
C71-PT003B	2	25350	5.3	H.3	PRSSURE TRANSMITTER	103E1577	431
C71-PT003C	3	25350	5.3	H.7	PRSSURE TRANSMITTER	103E1577	431
C71-PT003D	4	25350	5.3	H.7	PRSSURE TRANSMITTER	103E1577	431

9B Summary of Analysis Supporting Fire Protection Design Requirements

9B.1 Introduction

This appendix is included to discuss in detail some of the analysis associated with the design decisions and requirements stated in Subsection 9.5.1.

9B.2 Fire Containment System

As stated in Subsection 9.5.1.0.3, the Fire Containment System is the structural system and appurtenances that work together to confine the direct effects of a fire to the fire area in which the fire originates. The Fire Containment System is required to contain a fire with a maximum severity as defined by the time-temperature curve defined in ASTM E119 for a fire with a duration of three hours.

9B.2.1 Fire Types

The Fire Containment System is capable of coping with three general types and magnitudes of fires. They are:

(1) Three-Hour Fire

A three-hour fire is a fully involved fire producing a time-temperature profile equal to the standard ASTM E119 time-temperature test curve for a time period of three hours. For this condition, the temperature in the room at the end of three hours would be 1052°C. Complete burn-out of the fire area is assumed and would probably occur for a fire of this magnitude. No survival or recovery of equipment in the fire area is assumed. This capability of the Fire Containment System meets the requirements of Policy Issue SECY-89-013 (Reference 9B-1).

It is not likely that a true three-hour fire would ever occur as the fire would be limited to a lesser magnitude by fire suppression systems, available fuel, or available combustion air.

(2) Limited Growth Fire

A limited growth fire is a fire which produces a thermal column sufficient to create a heated layer of gases in the upper elevation of the room involved in the fire. Room flashover for this type of fire will be prevented as a result of insufficient fuel, heat venting or fire suppression activities. Although some of the equipment in the fire area would probably be unaffected by the fire, it is assumed that the function of all equipment in the fire area is lost. If not limited as assumed, this type of fire could flashover and become a fully involved three-hour fire, if sufficient fuel is available.

(3) Limited Growth, Smoky Fire

A severely limited growth, smoky fire is a fire such as smoldering rags or an electrically initiated cable fire. The heat release from the fire is small so that the smoke is cooled by entrainment of air and the thermal column is thereby limited in size. Since the smoke is cold, its travel is highly influenced by the HVAC air flow patterns in the room. Most equipment in the fire area would not be affected by the fire although no credit is taken for the equipment remaining functional. It is possible, but highly unlikely, that this type of fire could progress to a limited growth or fully involved three-hour fire.

A limited growth or a limited growth smoky fire are the most likely types of fires to occur.

9B.2.2 Fire Barriers

For the ABWR design, the direct effects of a fire are confined to a single fire area by provision of a three-hour-rated fire barrier surrounding each fire area. Fire barriers are formed by:

(1) Concrete fire barrier floors, ceilings, and walls which must be at least six inches thick (Reference 9B-2, Figure 7-8T) if made from carbonate and silicious aggregates. Other aggregates and thicknesses are acceptable if the type of construction has been tested and bears a UL (or equal) label for a three-hour rating.

(2) Partitions or other constructions such as steel stud and gypsum board partition walls which have been tested in accordance to Standard ASTM E119 to have a fire rating of at least three hours.

(3) Rated fire doors with the label of a certified laboratory which indicates that the door and frame have been tested to the requirements of ASTM E119 for a standard time-temperature curve for three hours.

(4) Penetration seals for process pipes and cable trays which have been shown by test to withstand a three-hour fire per the standard ASTM E119 time-temperature curve. Certain penetrations such as the primary containment penetrations may be shown by analysis to have a fire resistance equal to a three-hour rating.

(5) Special assemblies and constructions as listed in subsection 9A.3.6 and 9A.3.7 of the Fire Hazard Analysis.

(6) Fire dampers in HVAC ducts (two per division) within secondary containment. With the exception of secondary containment, separate HVAC systems have been provided for each division so that there are no HVAC ducts routed between divisions except within secondary containment. Within secondary containment there are common supply and a common exhaust ducts for all of secondary containment. The ducts are branched in three places to provide divisional branches which are protected by fire dampers and isolation valves.

Backup protection for failure of fire barrier penetrations is provided in that once a fire has been discovered, the HVAC system for the area experiencing the fire is switched to its smoke removal mode. In the smoke removal mode, the pressure differentials are such that leakage through a penetration would be into the area of the fire. The leakage air velocity would be sufficiently high to confine the combustion products to the fire area with the fire. The smoke control system is capable of providing sufficient air to provide control for an opening between fire areas as large as an open personnel access door. For this reason, mechanical failure of a fire barrier penetration seal would not result in the fire breaching the barrier.

The completeness of the barriers for the Fire Containment System is examined and documented on a room by room basis in the Fire Hazard Analysis, Appendix 9A.

9B.2.3 Allowable Combustible Loading

Subsection 9B.2.2 documents that the ABWR plant design provides capability by fire barriers to cope with a standard three-hour fire. It is the purpose of this subsection to explore what this means in terms of the expected and allowable combustible loading in the plant.

9B.2.3.1 Permanent Loading

The problem associated with predicting the allowable combustible loading compatible with a given fire rating is well stated in the NFPA handbook (Reference 9B-2, p7-111).

> "Technically accurate methods for relating fire severity, fire load, and fire resistance requirements are complex but can be advantageously used in important specific applications. Such methods require consideration of parameters other than the fuel load, such as ventilation, type of enclosure walls, and ceiling. These methods are complex and currently too difficult for general use in design or selection of barrier fire resistance."

With this quote in mind allowable fire loading for the ABWR was worked out on the basis of information available from industry experience and testing which classifies the types of occupancies, their fire loads and the expected fire severity which might occur in the occupancies. This information can be used to approximately relate the fire

loading and expected severity for the various types of occupancies. Three examples of how this was done for the ABWR design follow.

Example 1

One example is taken from Table 7-9B of the NFPA handbook (Reference 9B-2) and reproduced here as Table 9B-1. From the table, a fire as a result of ignition of ordinary combustibles (wood, paper and similar materials) with a heat of combustion of 7,000 (16.30 MJ/kg) to 8,000 (18.63 MJ/kg) Btu per pound and a loading of 146.5 kg/m^2 (30 lbs/ft^2) of floor area in a fire resistive building is estimated to produce a fire of severity equivalent to the standard time-temperature curve for three hours. This equates to an average fire loading of 2.73 GJ/m^2 (146.5x18.63). This is an indication of the capacity limit for the three-hour fire containment system for the ABWR.

In making the comparisons on the table, recognition was made that for two fires with different temperature histories, the fires may be considered to have equivalent severity when the areas under their time-temperature curves are equal.

Burning rate is an indication of fire severity and therefore of interest. For this example, the average burning rate is 15.14 MJ per min per square foot of floor area (2.73 GJ/m^2 divided by 180 minutes).

Example 2

Another method by which the allowable combustible loading may be determined is by reference to the information summarized in Figure 7-9B of Reference 9B-2. Figure 9B-1 is a reproduction of that figure for the period of time of zero to two hours. The figure has fire endurance and time-temperature curves plotted on it. Each curve is tagged with an alpha character from A through E which indicates the type of occupancy assumed for the curve per Table 7-9E of Reference 9B-2 and reproduced as Table 9B-2. The straight lines indicate the length of fire endurance (how long the fire burns) based upon amounts of combustibles involved in the fire. The curved lines indicate the severity expected for the various occupancies. There is no direct relationship between the straight and curved lines, but, for example, from the straight line curves, 48.82 kg/m^2 of ordinary combustibles is capable of producing a 90-minute fire in a “C” occupancy. The 90-minute fire might be expected to have a severity equal to that of the curved line “C”. As additional examples, 48.82 kg/m^2 of combustibles would produce 75 and 60 minute fires in “D” and “E” occupancies, respectively. The fire severity would be expected to follow their respective “D” and “E” time-temperature curves.

Time-temperature curve “E” also represents the standard ASTM E119 time-temperature curve. It is the design capability curve for the ABWR. Note that

given enough fuel and time a fire in any of the types of occupancies will eventually equal the standard time-temperature curve. While fast developing fires may peak above the standard curve in the early stages of fire development, they will tend to come back to or below the standard curve with time. This early peaking has little immediate effect on the life of fire barriers as they tend to respond to the area under the time-temperature curve more than to instantaneous values of temperature.

Figure 7-9B of the NFPA handbook covered a time frame of two hours. Figure 9B-1 has been extended to three hours by extrapolation. Note that the extrapolated fire endurance curve for an "E" type occupancy indicates that a fire loading of 151.4 kg/m^2 will produce a three-hour fire. This corresponds quite well with the 146.5 kg/m^2 mentioned in Example 1.

Another point of reference is that, as indicated in Table 9B-2, non-combustible power houses fall in the occupancy group defined as "Slight" and have an expected fire severity curve of "A". The "A" group has the least fire severity of the five groups. It represents a minimum challenge to the "E" capability of the ABWR. There are four groupings with greater fire severities. This is another indication of the margin provided by the three-hour barriers in the ABWR design. Such activities as paper working, printing, furniture-manufacturing and finishing would be within the fire containment capabilities of the ABWR three-hour fire barriers.

The extrapolated fire endurance curve for an "A" type occupancy, which includes non-combustible power houses, is approximately 39.1 kg/m^2 for a three-hour fire. This suggests that to be consistent with normal power house design, combustible loading in any given area of the ABWR should be limited to the equivalent of 39.1 kg/m^2 of ordinary combustibles having a heat of combustion of 18.63 MJ/kg and in a configuration that would not exceed an average burning rate of 242.3 $MJ/m^2 \cdot h$ (39.1x18.6/3) or 4.04 MJ/min. There is margin for higher loadings but they should be considered on a case by case basis and eliminated if possible or protected by automatic suppression systems. For the ABWR design, areas with permanent loadings higher than this magnitude are protected by automatic suppression systems, except for cable tray runs as discussed below.

Choosing the defined design limit in the above fashion gives a design margin for the combustible loading of 34/8 or 425% as compared to the ABWR design capability. While this is a rather large design margin, the uncertainties are also rather large. It does not appear that an undue hardship for the detail designers and plant operators will be created by utilizing this large margin.

Example 3

The British have graded building occupancies according to hazard by three classifications as determined by the fire load per sq ft. The classifications are occupancies of low, moderate and high fire load. The occupancy is defined as low if it does not exceed an average of 1.14 GJ/m^2 of net floor area of any compartment, nor an average of 2.28 GJ/m^2 in limited isolated areas, provided that storage of combustible material necessary to the occupancy may be allowed to a limited extent if separated from the remainder and enclosed by appropriate grade fire-resistive construction. Examples of occupancies of normal low fire load are offices, restaurants, hotels, hospitals, schools, museums, public libraries, and institutional and administrative buildings.

At 39 kg/m^2 of combustibles with a heat of combustion of 18.63 MJ/kg , the combustible loading would be 727 MJ/m^2. This is a low fire load occupancy per the British classification system.

The normal combustible loading limit of 727 MJ/m^2 average and the electrical room combustible loading limit of 1454 MJ/m^2 for limited areas as stated in Subsection 9.5.1.0.4 was chosen on the basis of the above three examples.

9B.2.3.2 Transient Combustibles

The design limit as stated in Subsection 9.5.1.1.4 should also be reasonable and acceptable for transient combustible loadings. Although there are many possible types of transient loads, one of the transient combustibles most likely to occur would be plastic garbage bags of protective clothing which might accumulate at a temporary change area during the cleanup of a radioactive spill. The justification of the acceptability of the stated design limit for this situation follows.

From the results of fire tests run at Southwest Research Laboratory and reported in Reference 9B-4, a 21.2 liter garbage sack of protective clothing weighs approximately 6.34 kg and burns at an average peak rate of 5.28 MJ/minwith a total heat release of 147.7 MJ. The minimum required number of square meters of floor per garbage bag in the change area would therefore be the total combustibles per bag divided by the normal combustible loading limit or 140,000/64,000 or 0.2 m^2. In actuality, if the bags were stacked this tightly together their burning rate would be greatly reduced as compared to the test because the available burning surface per bag would be greatly reduced. The value of the calculation is that it points out that a reasonable number of bags of protective clothing (3 or 4) located in a temporary change area would not materially threaten the limits of the fire tolerance of the plant.

Combustible liquid spills such as gasoline, lubricating oils, or diesel oil are another type of transient combustible which might be introduced into the plant during normal operation and maintenance. Although combustible liquids are required to be kept in

approved containers, the possibility of a spill exists. The acceptable size for a spill may be estimated on the basis that these types of liquids burn in a pool with a heat release rate of approximately "542 kcal/second per m^2", per Table 4-1 of the NFPA handbook, (Reference 9B-2). This is equal to 8.16 GJ/m2·h. The percent of room area which could be covered by a spill and still be within the defined design limit is 8.9% ((64,000/720,000) times 100). In other words a 10 by 10 foot room could have a spill covering 0.83 m^2 and still be within the design limit.

It is not intended that the defined design limit be rigidly applied to spills as they would occur very infrequently and be cleaned up quickly. The example is included here to give an indication of the size of a spill which would be consistent with the restrictions of the defined design limit. It validates the requirement that combustible liquids must be stored in limited quantities in approved containers (Subsection 9.5.1.1).

The example also points out the necessity to provide automatic fire suppression for areas, as has been done, where oil spills which could cover the entire floor area of a room are possible.

9B.2.3.3 Cable Trays

Insulation for electrical cables in cable trays is the major permanent combustible loading through-out the plant. For this reason cable trays are worthy of specific attention.

Twenty-four inch wide cable trays in stacks two trays wide and three trays high (six 0.61m wide trays or equal) are permitted without fixed automatic fire suppression in general plant areas. The acceptability of this configuration may be analyzed in at least two ways. One method (Total Combustibles Per Square Meter) is to calculate the total combustible loading per meter of stack and limit the width of the room through which the tray stack passes or the distance between the two by three stack and any additional stacks in the room to maintain the combustible loading per square meter of floor per meter of tray to no more than the design limit value. The second method (Burning Rate Limit) is to calculate a burning rate for the plastic insulation on the cables and restrict the quantities of cables per meter of cable tray stack to a value that will provide a heat release rate equal to or less than the design limit of 4.04 MJ per min per m^2 of floor. These two calculations and their results follow.

Total Combustible Cable Insulation Per Square Foot

From previous plant design experience the average weight of insulation per 0.3048m of cable tray is 4.53 kg for cross-linked polyethylene (XLPE-FR). With a heat of combustion of 6.69 MJ/kg, the stack would represent a heat load of 4.53 kg times 6.69 MJ/kg times 6 trays per double stack or 2.91 GJ per m of double tray stack. The normal combustible loading limit is 727 MJ/m^2. For the tray stack to be routed through a room

such as a corridor, the room would be required to have a minimum width of 4m (2.91 GJ per m of cable tray stack divided by 727 MJ/m^2).

Since the above is based on averages a specific calculation is warranted. Cross-linked polyethylene, flame retardant (XLPE-FR) and Tefzel (Registered trade mark, E.I. Du Pont De Nemours & Co. (Inc.)) are two types of cable insulations which are commercially available and for which standard constructions are compared in Table 9B-3.

In the above tabulation, 94 and 37 cables represent a design maximum fill of 40% for the two sizes of XLPE-FR insulated cables. 202 and 58 cables represent 40% fill for Tefzel. To stay within the allowable average combustible loading of 727 MJ per m^2 of floor, each square meter of cable tray loaded to 40% fill with XLPE-FR requires approximately two square meters of floor area (35,280/16,128). Each 0.093 m^2 of cable tray loaded to 40% fill with Tefzel would require from approximately one half to three quarters of a 0.093 m^2 (7,056/16,128 to 12,096/16,128). A 40% fill would provide almost twice as many Tefzel cables as XLPE-FR.

There is a reduced diameter cross-linked polyethylene cable (XLR) available. Its combustible loading and quantity of cables per a given tray width approaches that of Tefzel and either type would be quite viable for use in the ABWR.

Burning Rate of Cable Insulation

Although, as stated above, the effect on the fire barriers is dependent on the integral of the time-temperature curve more than the peak burning rate, a feel for the maximum burning rate which is possible with the allowable combustible load is still of interest.

Burning rate in kcal per kg is dependent on the amount of surface area available to burn, the amount of oxygen available for the combustion process and the properties of the combustible. For a solidly filled ladder cable tray with one full layer of cables, the surface available for the instantaneous combustion process is the total of the circumferences of the individual cables times the length of the cables. This equates to being pi times the width of the tray times the length of the tray. For a tray one meter wide and one meter long the cable surface area available for burning is 3.14 sq m (Pi x 1m x 1m). This is the maximum available burning surface as the top and bottom surface area is unchanged for additional layers of cables. The 10.2 cm deep side rails protect the sides of the cable stack in the trays so that they do not receive combustion air.

A summary of burning rate calculations is presented in Table 9B-4 by source and material type.

The burning rate for cross-linked polyethylene was calculated by use of equation 2 from section 5.3 of attachment 10.4 of the draft of the Fire Vulnerability Evaluation (FIVE) (Reference 9B-4). For this calculation the peak heat release rate is taken to be:

$$Q_{fs} = 0.45 q_{bs} A \quad (9B\text{-}1)$$

where q_{bs} is the bench scale burning rate taken from Table A-7M of the FIVE document (Reference 9B-4). "A" is the burning surface area.

The data estimated from tests at UL was taken from a series of modified IEEE 383 tests conducted in 1976 (Reference 9B-5). Although it was not the purpose of the tests to determine burning rate, it is possible to estimate the burning rate from the reported insulation consumed and cable burning time as determined by time tagged photographs of the tests in progress. Cross-linked polyethylene and Tefzel insulated cables of the constructions discussed earlier in this section (Table 9B-3) were tested with the range of burning rates indicated in Table 9B-4 as the results.

The ventilation limited burning rate was calculated using the FIVE methodology using the Draft FIVE Plant Screening Guide (Reference 9B-4). The equation is:

$$Q_{max}/V = 3600 \text{ kW/m}^3\text{/s} \quad (9B\text{-}2)$$

where Q_{max} is the maximum heat release rate, V is the volume flow, and m^3/s is the volume flow rate in cubic meters per second.

(9B-3)

For one m^2 of a room with a ceiling height of 4.57m and a ventilation rate of 3 air changes per hour the ventilation rate is 13.71 m^3/h (1 m^2 x 4.57m x 3 changes per h). Q_{max} is equal to:

$$Q_{max} = 3600 \times 13.71 \quad (9B\text{-}4)$$

$$= 49.37 \text{ MJ/h per m}^2$$

The burning rate for the design normal combustible load limit is the combustible load limit of 727 MJ/m^2 as defined in Subsection 9B.3.2.1, divided by 180 minutes (3 hours) is 4.04 MJ/min per m^2.

Similarly the burning rate of 15.13 MJ/min per m^2 for the fire barrier capability is the capability of 2.72 GJ/m^2 divided by 180 minutes.

The normal combustible load limit of 964 kcal/min per m^2 divided into the burning rate of 6.99 MJ/m^2 to 37.84 MJ/m^2 of open ladder cable tray gives a ratio of 1,581 to 8,742 cm^2 of floor area per 0.093 m^2 of cable tray in a room, depending on the type of insulation used.

The value of the burning rate calculations is that they give an idea of what the localized burning rate might be for a cable fire that is not burning in the ventilation controlled mode. Multiple trays of cables should not be run in rooms such as oil storage tank rooms where there would be an ignition source sufficiently large to ignite the entire amount of cable in the room. Also, areas containing potential ignition sources sufficiently large to ignite large amounts of cables in the areas are sprinkled. For these reasons, the normal combustible loading limit based on the total combustibles per square foot should be used in preference to using the localized burning rate as the basis for setting the limit.

One additional comment is that the low ventilation controlled burning rate of 49.36 MJ/hr per m^2 of floor area as compared to the barrier system capacity of 15.13 MJ/min per m^2 is another indication of the design margin that is provided by the three-hour fire barrier system. The capacity of the barrier system should not be approached by the fire intensity except possibly during the time when the ventilation rate to the area experiencing the fire has been increased to facilitate fire suppression activities.

It is possible that during the detailed design phase certain areas of concentration of cable trays may exceed the normal or electrical combustible loading limit. Multiplexing of signals and the overall plant layout will tend to minimize the number of these areas of concentration of cable trays. There are options available to the detail designer to which will specific concentrations above the general stated combustible loading limits. For example, the designer could use one or more of the following options.

Option 1

Use a cable insulation with a lower required thickness, a low heat of combustion or a low burning rate, such as Tefzel. The number of cable trays could be held constant or the same number of cables could be routed through fewer cable trays.

Option 2

A second option would be to utilize cable trays with solid bottoms and solid covers for the congested areas.

9B.3 References

9B-1 Stello, Victor, Jr., “Design Requirements Related To The Evolutionary Advanced Light Water Reactors (ALWRS)”, Policy Issue, SECY-89-013, The Commissioners, United States Nuclear Regulatory Commission, January 19, 1989

9B-2 Cote, Arthur E., "NFPA Fire Protection Handbook", National Fire Protection Association, Sixteenth Edition

9B-3 C. F. Braun & Co., "TVA STRIDE Fire Hazard Analysis", Project 4840-P, Rev. 1, General Electric Company, May 1977

9B-4 Professional Loss Control, "Fire Vulnerability Evaluation Methodology (FIVE) Plant Screening Guide", Draft, EPRI7.REV, Contract No. RP 3000-41, Electric Power Research Institute, Palo Alto, CA, 1990

9B-5 "Flame Tests". A report on tests conducted by Underwriters Laboratories, Inc., at Northbrook, Illinois, September 27, 28, and 29, 1976, E. I. Du Pont De Nemours & Co. (Inc.) E-12952

Table 9B-1 Estimated Fire Severity for Offices and Light Commercial Occupancies*

Data Applying to Fire-Resistive Buildings with Combustible Furniture and Shelving		
Combustible Content Total, Including Finish, Floor, and Trim, psf	**Heat Potential Assumed † Btu Per Sq Ft**	**Equivalent Fire Severity Approximately Equivalent to That of Test under Standard Curve for the Following Periods:**
5	40,000	30 min
10	80,000	1 hr
15	120,000	1 1/2 hrs
20	160,000	2 hrs
30	240,000	3 hrs
40	320,000	4 1/2 hrs
50	380,000	7 hrs
60	432,000	8 hrs
70	500,000	9 hrs

* Reproduced from Table 7-9B, NFPA Fire Protection Handbook, Reference 9B-2.

† Heat of combustion of contents taken at 8,000 Btu per lb up to 40 psf; 7,600 Btu per lb for 50 lb, and 7,200 Btu for 60 lb and more to allow for relatively greater proportion of paper. The weights contemplated by the tables are those of ordinary combustible materials, such as wood, paper, or textiles.

Table 9B-2 Fire Severity Expected by Occupancy*

Temperature Curve A (Slight)
Well-arranged office, metal furniture, noncombustible building.
Welding areas containing slight combustibles.
Noncombustible power house.
Noncombustible buildings, slight amount of combustible occupancy.
Temperature Curve B (Moderate)
Cotton and waste paper storage (baled) and well-arranged, noncombustible building.
Paper-making processes, noncombustible building.
Noncombustible institutional buildings with combustible occupancy.
Temperature Curve C (Moderately Severe)
Well-arranged combustible storage, e.g., wooden patterns, noncombustible buildings.
Machine shop having noncombustible floors.
Temperature Curve D (Severe)
Manufacturing areas, combustible products, noncombustible building.
Congested combustible storage areas, noncombustible building.
Temperature Curve E (Standard Fire Exposure—(Severe)
Flammable liquids.
Woodworking areas.
Office, combustible furniture and buildings.
Paper working, printing, etc.
Furniture manufacturing and finishing.
Machine shop having combustible floors.

* 1.Reproduction of Table 7-9E, NFPA Fire Protection Handbook (Reference 9B-2).
2.See Figure 9B-1 for the temperature curves identified in this table.

Table 9B-3 Cable Type and Configuration for UI Tests*

Cable Type	Cables Per Tray 1 Ft Wide	Combustible Loading Btus Per Sq Ft of Tray
7/C #14AWG XLPE-FR	94	142,000
7/C #14AWG Tefzel	94	22,500
7/C #14AWG Tefzel	202	48,400
19/C #14AWG XLPE-FR	37	136,000
19/C #14AWG Tefzel	37	17,600
19/C #14AWG Tefzel	58	27,600

* (This table is reproduced from Reference 9B-2)

Table 9B-4 Summary of Burning Rate Calculations

Material	Source of Data	Burning Rate (MJ/min per m^2 of Surface Area)	Burning Rate MJ/min per m^2 of Cable Tray or Floor)
Cross-linked polyethylene	FIVE bench scale burning data (Ref. 9B-4)	10.417	32.724
Cross-linked polyethylene	Estimated from tests at UL (Ref. 9B-5)	6.67 to 12.05	20.955 to 37.853
Tefzel	Estimated from tests at UL (Ref. 9B-5)	2.22 to 4.367	6.988 to 13.716
Ventilation limited (Three air changes per hour)	FIVE Plant Screening Guide, (Ref. 9B-4)		0.820
Design normal maximum limit	Typical for power houses (Ref. 9B-2)		4.040
Fire barrier capability	ASTM E-119 curve for three hours		15.123

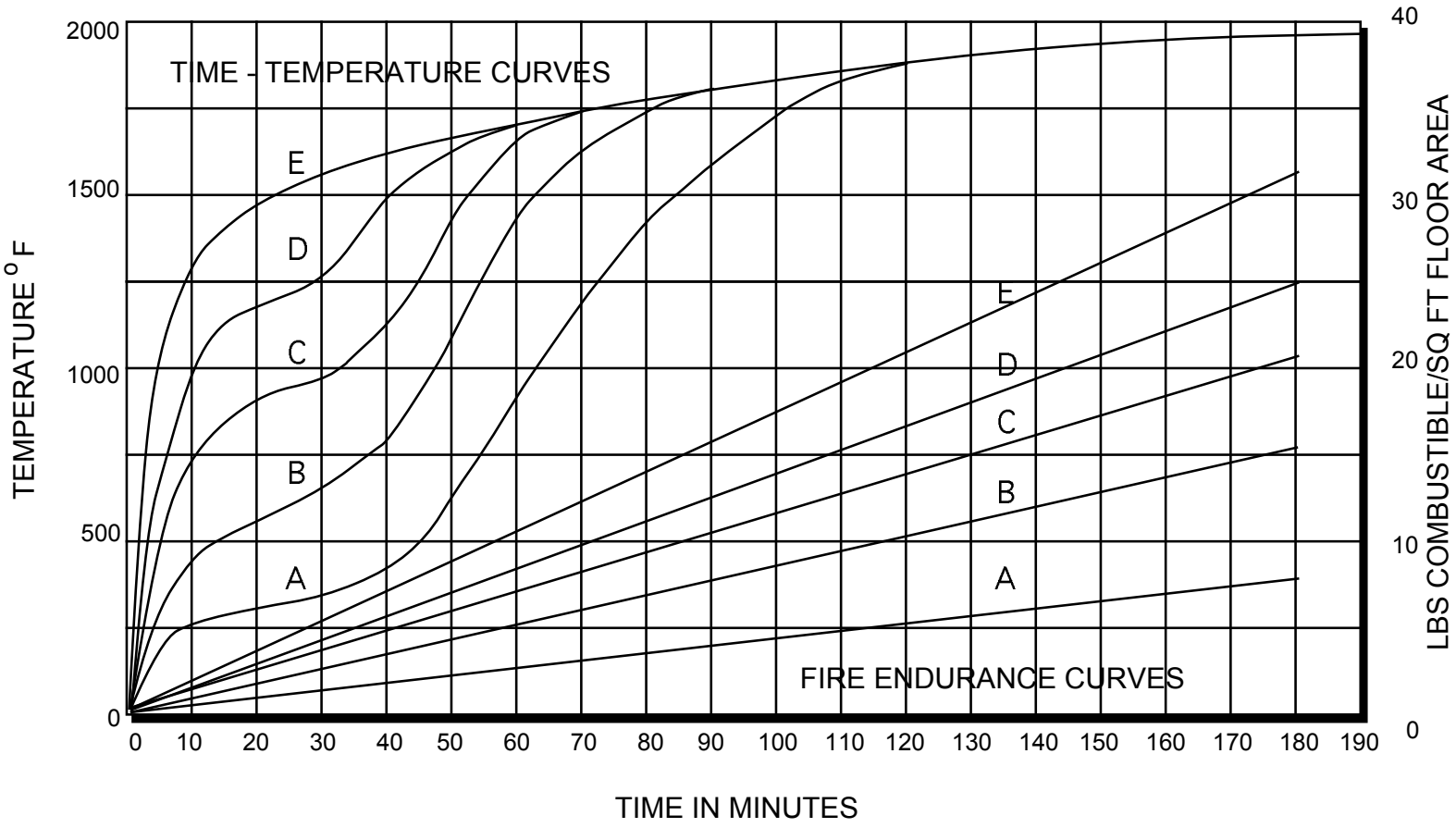

NOTE: THIS FIGURE REPRODUCED FROM REFERENCE 9B-2 FOR FIRST 120 MINUTES.

Figure 9B-1 Possible Classification of Building Contents for Fire Severity and Duration

9C Regulatory Guide 1.52, Section C, Compliance Assessment

This Appendix provides the compliance status of the ABWR Control Room Habitability Area (CRHA) HVAC System design with each of the regulatory positions specified under Section C of Regulatory Guide 1.52, and the revision cited in Table 1.8-20. Following each provision of Regulatory Guide 1.52 is an evaluation of the ABWR compliance with that position. If the ABWR deviates from the Regulatory Guide 1.52 position, justification is provided. Note that the similarly numbered sections from the revisions cited in Table 1.8-21 for ANSI N509 and N510 are used for ABWR CRHA HVAC System design except as otherwise noted; Regulatory Guide 1.52 references older revisions (1976) of these standards. Compliance as described in the remainder of this response is measured against the applicable section of the standards referenced in Table 1.8-21.

The Habitability systems provide the capability to detect and limit the introduction of radioactive material and smoke into the control room from the sources external to the control building.

9C.1 ABWR Compliance with RG 1.52, Revision 2, Section C

(1) Environmental Design Criteria

(a) "The design of an engineered safety feature atmosphere cleanup system should be based on the maximum pressure differential, radiation dose rate, relative humidity, maximum and minimum temperature, and other conditions resulting from the postulated DBA and on the duration of such conditions."

The design is in compliance with this position.

(b) "The design of each ESF system should be based on the radiation dose to essential services in the vicinity of the adsorber section, integrated over the 30-day period following the postulated DBA. The radiation source term should be consistent with the assumptions found in Regulatory Guides 1.3, 1.4 and 1.25. Other engineered safety features, including pertinent components of essential services such as power, air, and control cables, should be adequately shielded from the ESF atmosphere cleanup systems."

The design is in compliance with this position. Table 3I.3-19 provides the radiation environmental conditions inside control room for plant abnormal and accident conditions. Note that integrated doses for six months, not 30 days, are provided in Table 3I.3-19.

(c) "The design of each adsorber should be based on the concentration and relative abundance of the iodine species (elemental, particulate, and organic), which should be consistent with the assumptions found in Regulatory Guides 1.3, 1.4 and 1.25."

The design is in compliance with this position.

(d) "The operation of any ESF atmosphere cleanup system should not deleteriously affect the operation of other engineered safety features such as a containment spray system, nor should the operation of other engineered safety features such as a containment spray system deleteriously affect the operation of any ESF atmosphere cleanup system."

The design is in compliance with this position.

(e) Components of systems connected to compartments that are unheated during a postulated accident should be designed for post-accident effects of both the lowest and highest predicted temperatures.

The design is in compliance with this position.

(2) System Design Criteria

(a) "ESF atmosphere cleanup systems designed and installed for the purpose of mitigating accident doses should be redundant. The systems should consist of the following sequential components: (1) prefilters (2) HEPA filters before the adsorbers, (3) iodine adsorbers (impregnated activated carbon or equivalent adsorbent such as metal zeolites), (4) HEPA filters after the adsorbers, (5) ducts and valves, (6) fans, and (7) related instrumentation. Heaters or cooling coils used in conjunction with heaters should be used when the humidity is to be controlled before filtration."

The design is in compliance with this position

(b) "The redundant ESF atmosphere cleanup systems should be physically separated so that damage to one system does not also cause damage to the second system. The generation of missiles from high-pressure equipment rupture, rotating machinery failure, or natural phenomena should be considered in the design for separation and protection."

The design is in compliance with this position.

(c) "All components of an engineered-safety-feature atmosphere cleanup system should be designated as Seismic Category I (see Regulatory

Guide 1.29) if failure of a component would lead to the release of significant quantities of fission products to the working or outdoor environments."

The design is in compliance with this position.

(d) "If the ESF atmosphere cleanup system is subject to pressure surges resulting from the postulated accident, the system should be protected from such surges. Each component should be protected with such devices as pressure relief valves so that the overall system will perform its intended function during and after the passage of the pressure surge."

The ABWR CRHA HVAC is not subject to "pressure surges" to cause damage to the filter train.

(e) "In the mechanical design of the ESF system, the high radiation levels that may be associated with buildup of radioactive materials on the ESF system components should be given particular consideration. ESF system construction materials should effectively perform their intended function under the postulated radiation levels. The effects of radiation should be considered not only for the heaters, HEPA filters, adsorbers, and fans, but also for any electrical insulation, controls, joining compounds, dampers, gaskets, and other organic-containing materials that are necessary for operating during a postulated DBA."

The design is in compliance with this position.

(f) "The volumetric air flow rate of a single cleanup train should be limited to approximately 30,000 ft^3/min. If a total system air flow in excess of this rate is required, multiple trains should be used. For ease of maintenance, a filter layout three HEPA filters high and ten wide is preferred."

The design is in compliance with this position.

(g) "The ESF atmosphere cleanup system should be instrumented to signal, alarm, and record pertinent pressure drops and flow rates at the control room."

The design is in compliance with this position. Filter train is a supplementary system to CRHA HVAC system and a separate instrumentation for the filter train is not warranted. Pertinent pressure drops across the individual components of the filter train are indicated at a local rack and main control room.

(h) "The power supply and electrical distribution system for the ESF atmosphere cleanup system described in Section C.2.a above [one that is used to mitigate accident doses] should be designed in accordance with Regulatory Guide 1.32. All instrumentation and equipment controls should be designed to IEEE Standard 279. The ESF system should be qualified and tested under Regulatory Guide 1.89. To the extent applicable, Regulatory Guides 1.30, 1.100, and 1.118 and IEEE-334 should be considered in the design."

The design is in compliance with this position. Commitments for all except IEEE 334 are provided in Chapters 7, 8 and 17 and Sections 3.10 and 3.11. IEEE 334 is applied to the CRHA HVAC System per Regulatory Guide 1.52.

(i) "Unless the applicable engineered-safety-feature atmosphere cleanup system operates continuously during all times that a DBA can be postulated to occur, the system should be automatically activated upon the occurrence of a DBA by (1) a redundant engineered-safety-feature signal (i.e., temperature, pressure) or (2) a signal from redundant Seismic Category I radiation monitors."

The design is in compliance with this position.

(j) "To maintain radiation exposures to operating personnel as low as is reasonably achievable during plant maintenance, ESF atmosphere cleanup system should be designed to control leakage and facilitate maintenance in accordance with the guidelines of Regulatory Guide 8.8. The ESF atmosphere cleanup train should be totally enclosed. Each train should be designed and installed in a manner that permits replacement of the train as an intact unit or as a minimum number of segmented sections without removal of individual components."

The design is in compliance with this position.

(k) "Outdoor air intake openings should be equipped with louvers, grills, screens, or similar protective devices to minimize the effects of high winds, rain, snow, ice, trash, and other contaminants on the operation of the system. If the atmosphere surrounding the plant could contain significant environmental contaminants, such as dusts and residues from smoke cleanup systems from adjacent coal burning power plants or industry, the design of the system should consider these contaminants and prevent them from affecting the operation of any ESF atmosphere cleanup system."

The design is in compliance with this position.

(l) "ESF atmosphere cleanup system housings and ductwork should be designed to exhibit on test a maximum total leakage rate as defined in Section 4.12 of ANSI N509-1976. Duct and housing leak tests should be performed in accordance with the provisions of Section 6 of ANSI N510-1975."

The design is in compliance with this position.

(3) Component Design Criteria and Qualification Testing

(a) "Demisters should be designed, constructed, and tested in accordance with the requirements of Section 5.4 of ANSI N509-1976. Demisters should meet Underwriters' Laboratories (UL) Class 1 requirements."

The CRHA HVAC System does not have demisters.

(b) "Air heaters should be designed, constructed, and tested in accordance with the requirements of Section 5.5 of ANSI N509-1976."

The design is in compliance with this position.

(c) "Materials used in the prefilters should withstand the radiation levels and environmental conditions prevalent during the postulated DBA. Prefilters should be designed, constructed, and tested in accordance with the provisions of Section 5.3 of ANSI N509-1976."

The design is in compliance with this position.

(d) "The HEPA filters should be designed, constructed, and tested in accordance with Section 5.1 of ANSI N509-1976. Each HEPA filter should be tested for penetration of dioctyl phthlate (DOP) in accordance with the provisions of MIL-F-51068 and MIL-STD-282."

The design is in compliance with this position. The applicable portion of MIL-F-51068 is Section 3.4.1. The applicable portions of MIL-STD-282 are Methods 102.1, 102.8 and 102.9.1.

(e) "Filter and adsorber mounting frames should be constructed and designed in accordance with the provisions of Section 5.6.3 of ANSI N509-1976."

The design is in compliance with this position.

(f) "Filter and adsorber banks should be arranged in accordance with the recommendations of Section 4.4 of ERDA 76-21."

The design is in compliance with this position.

(g) "System filter housings, including floors and doors, should be constructed and designed in accordance with the provisions of Section 5.6 of ANSI N509-1976."

The design is in compliance with this position.

(h) "Water drains should be designed in accordance with the recommendations of Section 4.5.8 of ERDA 76-21."

The design is in compliance with this position.

(i) "The adsorber section of the ESF atmosphere cleanup system may contain any adsorbent material demonstrated to remove gaseous iodine (elemental iodine and organic iodides) from air at the required efficiency. Since impregnated activated carbon is commonly used, only this adsorbent is discussed in this guide."

The design is in compliance with this position.

"Each original or replacement batch of impregnated activated carbon used in the adsorber section should meet the qualification and batch test results summarized in Table 5.1 of ANSI N509-1976. In this table, a 'qualification test' should be interpreted to mean a test that establishes the suitability of a product for a general application, normally a one-time test reflecting historical typical performance of material. In this table, a 'batch test' should be interpreted to mean a test made on a production batch of product to establish suitability for a specific application. A 'batch of activated carbon' should be interpreted to mean a quantity of material of the same grade, type, and series that has been homogenized to exhibit, within reasonable tolerance, the same performance and physical characteristics and for which the manufacturer can demonstrate by acceptable tests and quality control practices such uniformity."

The test requirements for the adsorber section will comply with this position.

"All material in the same batch should be activated, impregnated, and otherwise treated under the same process conditions and procedures in the same process equipment and should be produced under the same manufacturing release and instructions. Material produced in the same charge of batch equipment constitutes a batch; material produced in different charges of the same batch equipment should be included in the same batch only if it can be homogenized as above. The maximum batch size should be 350 ft^3 of active carbon."

The test requirements will comply with this position.

> "If an adsorbent other than impregnated activated carbon is proposed or if the mesh size distribution is different from the specification in Table 5.1 of ANSI N509-1976, the proposed adsorbent should have demonstrated the capability to perform as well as or better than activated carbon in satisfying the specifications in Table 5.1 of ANSI N509-1976."

Impregnated activated carbon is used in the ABWR CRHA HVAC System design. The performance requirements of Table 5-1 of ANSI N509 will be met.

> "If impregnated activated carbon is used as the adsorbent, the adsorber system should be designed for an average atmosphere residence time of 0.25 sec per two inches of adsorbent bed. The adsorption unit should be designed for a maximum loading of 2.5 mg of total iodine (radioactive plus stable) per gram of activated carbon. No more than 5% of impregnant (50 mg of impregnant per gram of carbon) should be used. The radiation stability of the type of carbon specified should be demonstrated and certified (see Section C.1.b of this guide for the design source term)."

The design is in compliance with this position.

(j) "Adsorber cells should be designed, constructed, and tested in accordance with the requirements of Section 5.2 of ANSI N509-1976."

The design is in compliance with this position.

(k) "The design of the adsorber section should consider possible iodine desorption and adsorbent auto-ignition that may result from radioactivity-induced heat in the adsorbent and concomitant temperature rise. Acceptable designs include a low-flow air bleed system, cooling coils, water sprays for the adsorber section, or other cooling mechanisms. Any cooling mechanism should satisfy the single-failure criterion. A low-flow air bleed system should satisfy the single-failure criterion for providing low-humidity (less than 70% relative humidity) cooling air flow."

The design is in compliance with this position. The temperature rise of the charcoal due to iodine desorption is not expected to be of any significance because of the low residual radioactive iodine being spewed to the atmosphere from the stack.

(l) "The system fan, its mounting, and the ductwork connections should be designed, constructed, and tested in accordance with the requirements of Sections 5.7 and 5.8 of ANSI N509-1976."

The design is in compliance with this position.

(m) "The fan or blower used on the ESF atmosphere cleanup system should be capable of operating under the environmental conditions postulated, including radiation."

The design is in compliance with this position.

(n) "Ductwork should be designed, constructed, and tested in accordance with the provisions of Section 5.10 of ANSI N509-1976."

The design is in compliance with this position.

(o) "Ducts and housings should be laid out with a minimum of ledges, protrusions, and crevices that could collect dust and moisture and that could impede personnel or create a hazard to them in the performance of their work. Straightening vanes should be installed where required to ensure representative air flow measurement and uniform flow distribution through cleanup components."

The design is in compliance with this position.

"Dampers should be designed, constructed, and tested in accordance with the provisions of Section 5.9 of ANSI N509-1976."

The design is in compliance with this position.

(4) Maintenance

(a) "Accessibility of components and maintenance should be considered in the design of ESF atmosphere cleanup systems in accordance with the provisions of Section 2.3.8 of ERDA 76-21 and Section 4.7 of ANSI N509-1976."

The design is in compliance with this position.

(b) "For ease of maintenance, the system design should provide for a minimum of three feet from mounting frame to mounting frame between banks of components. If components are to be replaced, the dimension to be provided should be the maximum length of the component plus a minimum of three feet."

The design is in compliance with this position.

(c) "The system design should provide for permanent test probes with external connections in accordance with the provisions of Section 4.11 of ANSI N509-1976."

The design is in compliance with this position.

(d) "Each ESF atmosphere cleanup train should be operated at least 10 hours per month, with the heaters on (if so equipped), in order to reduce the buildup of moisture on the adsorbers and HEPA filters."

The design is in compliance with this position.

(e) "The cleanup components (i.e., HEPA filters, prefilters, and adsorbers) should not be installed while active construction is still in progress."

Installation of the CRHA HVAC System will comply with this position.

(5) In-Place Testing Criteria

(a) "A visual inspection of the ESF atmosphere cleanup system and all associated components should be made before each in-place air flow distribution test, DOP test, or activated carbon adsorber section leak test in accordance with the provisions of Section 5 of ANSI N510-1975."

The system test procedures will comply with this position.

(b) "The air flow distribution to the HEPA filters and iodine adsorbers should be tested in place for uniformity initially and after maintenance affecting the flow distribution. No velocity reading shall exceed ±20% of the calculated average. The testing should be conducted in accordance with the provisions of Section 9 of "Industrial Ventilation" and Section 8 of ANSI N510-1975."

Acceptance tests, performed after completion of initial construction and after any system modifications or repair (per Table 1 of ANSI N510), will comply with this position. The guidance in "Testing of Ventilation Systems," Section 9 of "Industrial Ventilation," and ANSI N510 will be applied to any testing performed.

(c) "The in-place DOP test for HEPA filters should conform to Section 10 of ANSI N510-1975. HEPA filter sections should be tested in place (1) initially, (2) at least once per 18 months thereafter, and (3) following painting, fire, or chemical release in any ventilation zone communicating with the system to confirm a penetration of less than 0.05% at rated flow. An engineered safety-feature air filtration system satisfying this condition can be considered to warrant a 99% removal

efficiency for particulates in accident dose evaluations. HEPA filters that fail to satisfy this condition should be replaced with filters qualified pursuant to regulatory position C.3.d of this guide. If the HEPA filter bank is entirely or only partially replaced, an in-place DOP test should be conducted."

The surveillance test procedure will comply with this position.

"If any welding repairs are necessary on, within, or adjacent to the ducts, housing, or mounting frames, the filters and adsorbers should be removed from the housing during such repairs. The repairs should be completed prior to periodic testing, filter inspection, and in-place testing. The use of silicone sealants or any other temporary patching material on filters, housing, mounting frames, or ducts should not be allowed."

The CRHA HVAC System maintenance procedures will comply with this position.

(d) "The activated carbon adsorber section should be leak tested with a gaseous halogenated hydrocarbon refrigerant in accordance with Section 12 of ANSI N510-1975 to ensure that bypass leakage through the adsorber section is less than 0.05%. After the test is completed, air flow through the unit should be maintained until the residual refrigerant gas in the effluent is less than 0.01 ppm. Adsorber leak testing should be conducted (1) initially, (2) at least once per 18 months thereafter, (3) following removal of an adsorber sample for laboratory testing if the integrity of the adsorber section is affected, and (4) following painting, fire, or chemical release in any ventilation zone communicating with the system."

Surveillance testing is provided to comply with this position.

(6) Laboratory Testing Criteria for Activated Carbon

(a) "The activated carbon adsorber section of the ESF atmosphere cleanup system should be assigned the decontamination efficiencies given in Table 2 for elemental iodine and organic iodides if the following conditions are met:"

The carbon bed is 100 mm deep. Per Table 2, the decontamination efficiency for bed depths 100 mm is 99%."

(i) "The adsorber section meets the conditions given in regulatory Position C.5.d of this guide."

As stated previously, the ABWR CRHA HVAC System complies with Position C.5.d.

(ii) "New activated carbon meets the physical property specifications given in Table 5.1 of ANSI N509-1976, and"

Activated carbon installed in the CRHA HVAC System will be covered by purchase requirements to meet the physical properties specified in Table 5-1 of ANSI N509.

(iii) "Representative samples of used activated carbon pass the laboratory tests given in Table 2."

Surveillance testing is provided to comply with this position. This position is interpreted as follows. Representative samples of used activated carbon will be laboratory tested with a frequency defined in Footnote c of Table 2 and as reflected in the technical specifications. Also per Footnote c of Table 2, a representative sample is defined in Position C.6.b. Testing will be performed at a relative humidity of 70% per ASTM D3803. The test acceptance criterion will be a methyl iodide penetration of less than 0.175%. ASTM D3803 is cited in Table 5-1 of ANSI N509-1980 for tests equivalent to those specified in Test 5.b of ANSI N509-1976.

If the activated carbon fails to meet any of the above conditions, it should not be used in engineered-safety-feature adsorbers.

"The activated carbon for the CRHA HVAC System will meet the conditions of Position 6.a(i), (ii) and (iii)."

(b) "The efficiency of the activated carbon adsorber section should be determined by laboratory testing of representative samples of the activated carbon exposed simultaneously to the same service conditions as the adsorber section. Each representative sample should be not less than two inches in both length and diameter, and each sample should have the same qualification and batch test characteristics as the system adsorbent. There should be a sufficient number of representative samples located in parallel with the adsorber section to estimate the amount of penetration of the system adsorbent throughout its service life. The design of the samplers should be in accordance with the provisions of Appendix A of ANSI N509-1976. Where the system activated carbon is greater than two inches deep, each representative sampling station should consist of enough two-inch samples in series to equal the thickness of the system adsorbent. Once representative

samples are removed for laboratory test, their positions in the sampling array should be blocked off."

The detailed design will be in compliance with this position.

"Laboratory tests of representative samples should be conducted, as indicated in Table 2 of this guide, with the test gas flow in the same direction as the flow during service conditions. Similar laboratory tests should be performed on an adsorbent sample before loading into the adsorbers to establish an initial point for comparison of future test results. The activated carbon adsorber section should be replaced with new unused activated carbon meeting the physical property specifications of Table 5.1 of ANSI N509-1976 if (1) testing in accordance with the frequency specified in Footnote c of Table 2 results in a representative sample failing to pass the applicable test in Table 2 o(2) no representative sample is available for testing."

The CRHA HVAC System design and testing will comply with this position. Physical property testing is addressed in the response to Position C.6.a(2).

9D SRP 6.5.1, Table 6.5.1-1 Compliance Assessment

The following provides a comparison between the instrumentation specified in SRP 6.5.1, Table 6.5.1-1, and the instrumentation provided in the ABWR Control Room Habitability Area (CRHA) HVAC System filter train design. Justification is provided for those items that deviate from the SRP.

There are two identical divisions of CRHA HVAC System filter trains located on the opposite ends of the Control Building. Each train can be used for the filtration of the outside air.

Instrumentation required for monitoring the operation of the CRHA HVAC System filter train to meet the requirements of GDC 19 is provided in the main control room (MCR) on panel displays. Monitoring, of course, is a fundamental plant requirement specified in GDC 13. Instrumentation used for testing or maintenance is located at the local instrument rack.

Unit Inlet or Outlet

	Local Panel	Main Control Room
SRP Table 6.5.1-1	Flow rate (indication)	Flow rate (recorded indication, high alarm indication, high alarm & low alarm signals)
ABWR CRHA filter train	Flow rate (indication)	Flow rate (indication) and low alarm

Local—ABWR design is in compliance with SRP Table 6.5.1-1

MCR—A low flow will indicate an obstruction to the flow CRHA HVAC system uses a mix of recirculated air and outdoor air. In such case, the redundant filter train can be used or both the filter trains can be used to supplement the air supply. An effective surveillance testing and parts replacement program will assure proper functioning of the CRHA filter trains. A high alarm signal in the MCR is not necessary.

Electric Heater

	Local Panel	Main Control Room
SRP Table 6.5.1-1	Status indication	None
ABWR CRHA filter train	Hand switch, status	Hand switch, status indication

Local—The ABWR design exceeds the local panel requirements of 6.5.1-1.

MCR—The ABWR design exceeds the control room requirements specified in SRP Table 6.5.1-1.

Space Between Heater and Prefilter

	Local Panel	Main Control Room
SRP Table 6.5.1-1	Temperature (Indication, high alarm and low alarm signals)	Temperature (Indication, high alarm and low alarm signals)
ABWR CRHA filter train	None	Temperature

Local—Temperature indication required for testing is available from the control room. Operation of the CRHA filter train to mitigate offsite releases will not be affected by the absence of temperature indication or the high and low alarms at the local panel.

MCR—The high alarm and trip in the ABWR CRHA filter train design is used to alert the operator and shut down the electric heater should the heater temperature increase above 110°C. This is slightly above the 107°C referenced in ASME N509, Subsection 5.5.1, but well within the available margin. Per ASME N509, Section 4.9, higher temperatures (above 150°C) may lead to significant desorption of iodine from the charcoal. Potential ignition of the charcoal occurs at a much higher temperature (290°C per ERDA 76-21, Subsection 3.4.2) and is also not a concern. Note that the ABWR CRHA filter train charcoal will meet the more stringent physical property specification of ASME N509, Table 5-1, for ignition temperature (330°C).

Relative humidity is maintained by controlling the temperature across the heater. A low temperature alarm indicates a potential failure such that the relative humidity in the process stream may not be maintained. Under these circumstances, the operator should stop the malfunctioning train and initiate the redundant train to mitigate the offsite releases. Additional temperature and relative humidity indication and high alarms are provided between the first HEPA filter and the charcoal adsorber and are

described in the later section of this response. The ABWR design meets the intent of SRP Table 6.5.1-1.

Prefilter

	Local Panel	Main Control Room
SRP Table 6.5.1-1	Pressure drop (indication high alarm signal)	None
ABWR CRHA filter train	Pressure drop (indication)	None

The SRP includes a high alarm signal for monitoring pressure drop across the prefilter. A higher than design differential pressure indicates filter clogging with reduced the flow across the filter. This condition is alarmed in the MCR via the low flow (flowmeter) alarm. The redundant CRHA filter train is available to mitigate any potential offsite release.

The ABWR design does not have this alarm. Local instrumentation for prefilter pressure drop measurement is used for testing purposes. A high alarm signal would not be appropriate during testing given the direct indication available on the instrument rack and main control room (MCR). Low system flow is alarmed in the control room should fan runback occur from any cause. Operation of the CRHA filter train to mitigate any potential offsite release will not be affected by the absence of the alarm on the local panel.

First HEPA Filter (Pre-HEPA)

	Local Panel	Main Control Room
SRP Table 6.5.1-1	Pressure drop (indication, high alarm signal)	None
ABWR CRHA filter train	Pressure drop (indication); DPI107	None

Local—The local panel has indication for confirming the proper pressure drop across the HEPA filter during testing. The direct indication available on the instrument rack. A higher than design differential pressure indicates filter clogging with reduced the flow across the filter. Low system flow is alarmed in the control room should fan runback occur. Operation of the CRHA filter train to mitigate any potential offsite release will not be affected by the absence of a local high alarm. During system operation, it is not expected that the HEPA filter would exhibit an excessively high pressure drop by virtue of the periodic testing for pressure drop and filter efficiency

performed in accordance with the schedules specified in the Technical Specifications. However, a pressure drop (indication) is provided.

MCR—ABWR CRHA filter train design complies with SRP Table 6.5.1-1.

Space between First HEPA Filter and Adsorber

	Local Panel	Main Control Room
SRP Table 6.5.1-1	None	None
ABWR CRHS filter train	None	Moisture (single division of redundant indication each with high alarm).

As mentioned previously, direct moisture indication is provided to assure relative humidity is less than 70% in the gases entering the charcoal adsorber. Relative humidity is a fundamental parameter for system function and has been emphasized in instrumentation design.

The ABWR CRHA HVAC filter train design exceeds the requirements of SRP Table 6.5.1-1 and ASME N509, Table 4-1.

Adsorber

	Local Panel	Main Control Room
SRP Table 6.5.1-1	None	None
ABWR CRHA filter train	Pressure drop (indication)	Temperature (high alarm)

The ABWR CRHA filter train design provides a single division of high temperature alarm both directly upstream and downstream of the charcoal adsorber. The purpose of this alarm is to alert the operator to the potential for desorption of iodine from the charcoal (if the CRHA filter train is operating post-accident) or if a failure occurs in one of the temperature control and high alarm circuits associated with the heaters. The setpoint for this alarm signal is 155°C. Should temperature reading and alarms indicate a continued and uncontrolled high temperature during CRHA filter operation, deluge actuation may be warranted. Pressure drop is provided at a local rack (for testing) and in MCR.

The ABWR CRHA filter train design exceeds the requirements of SRP Table 6.5.1-1.

Space between Adsorber and Second HEPA Filter (Post-HEPA)

	Local Panel	Main Control Room
SRP Table 6.5.1-1	Temperature (two-stage high alarm signal)	Temperature (indication, two-stage high alarm signal)
ABWR CRHA filter train	None	Temperature (single division of indication, control and trip, high alarm).

Local—Local temperature alarms are not provided since the area is not continuously manned. Appropriate alarms and indication are provided in the control room along with the necessary controls to respond to a high temperature signal.

MCR—The intent of the SRP MCR position, judging from Footnote 3 of Table 4-1 of ASME N509, is to provide an alarm on high temperature and signal for manual deluge actuation on a high-high temperature alarm. A higher than designed differential pressure indicates filter clogging reducing the flow across the filter. This condition is alarmed in the MCR via the low flow (flowmeter) alarm. The redundant CRHA filter train is available to mitigate any potential offsite release.

The need for deluge actuation is discussed in a later section of this Appendix, "Deluge Valve".

Second HEPA (Post HEPA)

	Local Panel	Main Control Room
SRP Table 6.5.1-1	Pressure drop (indication, high alarm signal	None
ABWR CRHA filter train	Pressure drop (indication)	Pressure drop (indication)

Local—The local panel has indication for confirming the proper pressure drop across the HEPA filter during testing. Like the prefilter and first HEPA filter, a high alarm signal would not be appropriate during testing given the direct indication on the rack. Low system flow is alarmed in the control room should fan runback occur. Operation of the CRHA filter train to mitigate any potential offsite release will not be affected by the absence of a local high alarm.

MCR—pressure drop indication is provided.

[Process] Fan	Local Panel	Main Control Room
SRP Table 6.5.1-1	(Optional hand switch and status indication)	Hand switch, status indication
ABWR CRHA filter train	None	Hand switch, status indication (run/stop)

Valve/Damper Operator	Local Panel	Main Control Room
SRP Table 6.5.1-1	(Optional status indication)	Status indication
ABWR CRHA filter train	None	Hand switch, status indication(Open/closed), position indication

The ABWR CRHA filter train design exceeds the requirements of SRP Table 6.5.1-1. Valve position indication (and control) is provided on the inlet dampers.

Deluge Valves	Local Panel	Main Control Room
SRP Table 6.5.1-1	Hand switch, status indication	Hand switch, status indication
ABWR CRHA filter train	None	None

Manual deluge capability is provided on the ABWR CRHA filter train with local indication at valves. Inadvertent wetting of the charcoal has led to system unavailability in operating plants. Remote deluge control, either from local panel or the main control room is not provided. Whenever the deluge capability is required, an operator has to connect the fire hose connection to the CRHA filter train deluge connection and manually open both the valves. As such status indication (open/closed) is not required. System availability is improved without compromising fire protection requirements.

ASME N509-1989 shows a move away from remote-operated valves. Hand switches and status indications are required only for power actuated valves.

System Inlet to Outlet

	Local Panel	Main Control Room
SRP Table 6.5.1-1	None	Summation of pressure drop across total system, high alarm signal
ABWR CRHA filter train	None	None

Per ASME N509-1989, $\sum\Delta P$ across the entire system is not required if each component whose pressure drop is subject to change over time has individual alarm or indication in main control room. Each component whose pressure drop is subject to change over time has pressure drop indication in the MCR. The ABWR CRHA filter trains design meets the requirements of SRP Table 6.5.1-1.

Other - Loop Seals	Local Panel	Main Control Room
SRP Table 6.5.1-1	None	None
ABWR CRHA filter train	None	Level (two divisions of low alarm)

Loop seals are provided within the dryer and filter train and in the piping downstream of the filter train discharge block valves. Redundant low level alarms are provided to assure loop seal level is maintained. The loop seals function to continuously and passively drain any accumulation of water in the SGTS. Accumulation of water in piping to the stack has been a problem in operating plants.