GE Nuclear Energy

Rev. 4
March 1997

ABWR Design Control Document

Design Control Document Table Of Contents

Effective Pages of the Design Control Document ..... Volume 1
Introduction to the Design Control Document ..... Volume 1
Tier 1, Section 1.0 Introduction ..... Volume 1
Tier 1, Section 2.0 Certified Design Material for ABWR Systems ..... Volume 1
Tier 1, Section 3.0 Additional Certified Design Material ..... Volume 2
Tier 1, Section 4.0 Interface Requirements ..... Volume 2
Tier 1, Section 5.0 Site Parameters ..... Volume 2
Tier 2, Chapter 1 Introduction and General Plant Description of Plant ..... Volume 3
Tier 2, Chapter 2 Site Characteristics ..... Volume 3
Tier 2, Chapter 3 Design of Structures, Conponents, Equipment and Systems ..... Volumes 4,5,6
Tier 2, Chapter 4 Reactor ..... Volume 7
Tier 2, Chapter 5 Reactor Coolant System and Connected Systems ..... Volume 7
Tier 2, Chapter 6 Engineered Safety Features ..... Volume 8
Tier 2, Chapter 7 Instrumentation and Control Systems ..... Volume 9
Tier 2, Chapter 8 Electric Power ..... Volume 9
Tier 2, Chapter 9 Auxiliary Systems ..... Volumes 10, 11, 12
Tier 2, Chapter 10 Steam and Power Conversion System ..... Volume 13
Tier 2, Chapter 11 Radioactive Waste Management ..... Volume 13
Tier 2, Chapter 12 Radiation Protection ..... Volume 13
Tier 2, Chapter 13 Conduct of Operations ..... Volume 14
Tier 2, Chapter 14 Intial Test Program ..... Volume 14
Tier 2, Chapter 15 Accident and Analysis ..... Volume 15
Tier 2, Chapter 16 Technical Specifications ..... Volumes 16, 17, 18, 19
Tier 2, Chapter 17 Quality Assurance ..... Volume 20
Tier 2, Chapter 18 Human Factors Engineering ..... Volume 20
Tier 2, Chapter 19 Response to Severe Accident Policy Statement ..... Volumes 21, 22, 23
Tier 2, Chapter 20 Question and Resonse Guide ..... Volumes 24, 25
Tier 2, Chapter 21 Engineering Drawings ..... Volumes 26 through 31

Table of Contents

1.0 Introduction

1.1 Definitions

1.2 General Provisions

2.0 Certified Design Material for ABWR Systems

2.1 Nuclear Steam Supply Systems
- 2.1.1 Reactor Pressure Vessel System
- 2.1.2 Nuclear Boiler System
- 2.1.3 Reactor Recirculation System

2.2 Control and Instrument Systems
- 2.2.1 Rod Control and Information System
- 2.2.2 Control Rod Drive System
- 2.2.3 Feedwater Control System
- 2.2.4 Standby Liquid Control System
- 2.2.5 Neutron Monitoring System
- 2.2.6 Remote Shutdown System
- 2.2.7 Reactor Protection System
- 2.2.8 Recirculation Flow Control System
- 2.2.9 Automatic Power Regulator System
- 2.2.10 Steam Bypass and Pressure Control System
- 2.2.11 Process Computer
- 2.2.12 Refueling Platform Control Computer*
- 2.2.13 CRD Removal Machine Control Computer

2.3 Radiation Monitoring Systems
- 2.3.1 Process Radiation Monitoring System
- 2.3.2 Area Radiation Monitoring System
- 2.3.3 Containment Atmospheric Monitoring System

2.4 Core Cooling Systems
- 2.4.1 Residual Heat Removal System
- 2.4.2 High Pressure Core Flooder System
- 2.4.3 Leak Detection and Isolation System
- 2.4.4 Reactor Core Isolation Cooling System

2.5 Reactor Servicing Equipment
- 2.5.1 Fuel Servicing Equipment
- 2.5.2 Miscellaneous Servicing Equipment
- 2.5.3 Reactor Pressure Vessel Servicing Equipment
- 2.5.4 RPV Internal Servicing Equipment
- 2.5.5 Refueling Equipment
- 2.5.6 Fuel Storage Facility
- 2.5.7 Under-Vessel Servicing Equipment

2.5.8 CRD Maintenance Facility
2.5.9 Internal Pump Maintenance Facility
2.5.10 Fuel Cask Cleaning Facility
2.5.11 Plant Start-up Test Equipment
2.5.12 Inservice Inspection Equipment

2.6 Reactor Auxiliary Systems
2.6.1 Reactor Water Cleanup System
2.6.2 Fuel Pool Cooling and Cleanup System
2.6.3 Suppression Pool Cleanup System

2.7 Control Panels
2.7.1 Main Control Room Panels
2.7.2 Radioactive Waste Control Panels (2.9.1)**
2.7.3 Local Control Panels
2.7.4 Instrument Racks (2.7.3)
2.7.5 Multiplexing System
2.7.6 Local Control Boxes (2.7.3)

2.8 Nuclear Fuel
2.8.1 Nuclear Fuel
2.8.2 Fuel Channel
2.8.3 Control Rod
2.8.4 Loose Parts Monitoring System

2.9 Radioactive Waste System
2.9.1 Radwaste System

2.10 Power Cycle Systems
2.10.1 Turbine Main Steam System
2.10.2 Condensate Feedwater and Condensate Air Extraction System
2.10.3 Heater Drain and Vent System
2.10.4 Condensate Purification System
2.10.5 Condensate Filter Facility (2.10.4)
2.10.6 Condensate Demineralizer (2.10.4)
2.10.7 Main Turbine
2.10.8 Turbine Control System (2.10.7)
2.10.9 Turbine Gland Seal System
2.10.10 Turbine Lubricating Oil System
2.10.11 Moisture Separator Heater
2.10.12 Extraction System
2.10.13 Turbine Bypass System
2.10.14 Reactor Feedwater Pump Driver (2.10.2)
2.10.15 Turbine Auxiliary Steam System
2.10.16 Generator
2.10.17 Hydrogen Gas Cooling System
2.10.18 Generator Cooling System

2.10.19 Generator Sealing Oil System
2.10.20 Exciter
2.10.21 Main Condenser
2.10.22 Off-Gas System
2.10.23 Circulating Water System
2.10.24 Condenser Cleanup Facility

2.11 Station Auxiliary Systems
2.11.1 Makeup Water (Purified) System
2.11.2 Makeup Water (Condensate) System
2.11.3 Reactor Building Cooling Water System
2.11.4 Turbine Building Cooling Water System
2.11.5 HVAC Normal Cooling Water System
2.11.6 HVAC Emergency Cooling Water System
2.11.7 Oxygen Injection System
2.11.8 (Not Used)
2.11.9 Reactor Service Water System
2.11.10 Turbine Service Water System
2.11.11 Station Service Air System
2.11.12 Instrument Air System
2.11.13 High Pressure Nitrogen Gas Supply System
2.11.14 Heating Steam and Condensate Water Return System
2.11.15 House Boiler
2.11.16 Hot Water Heating System
2.11.17 Hydrogen Water Chemistry System
2.11.18 Zinc Injection System
2.11.19 Breathing Air System
2.11.20 Sampling System
2.11.21 Freeze Protection System
2.11.22 Iron Injection System
2.11.23 Potable and Sanitary Water System

2.12 Station Electrical Systems
2.12.1 Electrical Power Distribution System
2.12.2 Unit Auxiliary Transformer (2.12.1)
2.12.3 Isolated Phase Bus (2.12.1)
2.12.4 Nonsegregated Phase Bus (2.12.1)
2.12.5 Metal Clad Switchgear (2.12.1)
2.12.6 Power Center (2.12.1)
2.12.7 Motor Control Center (2.12.1)
2.12.8 Raceway System (2.12.1)
2.12.9 Grounding Wire (2.12.1)
2.12.10 Electrical Wiring Penetration
2.12.11 Combustion Turbine Generator
2.12.12 Direct Current Power Supply

2.12.13 Emergency Diesel Generator System
2.12.14 Vital AC Power Supply
2.12.15 Instrument and Control Power Supply
2.12.16 Communication System
2.12.17 Lighting and Servicing Power Supply

2.13 Power Transmission
2.13.1 Reserve Auxiliary Transformer (2.12.1)

2.14 Containment and Environmental Control Systems
2.14.1 Primary Containment System
2.14.2 Containment Internal Structures (2.14.1)
2.14.3 Reactor Pressure Vessel Pedestal (2.14.1)
2.14.4 Standby Gas Treatment System
2.14.5 PCV Pressure and Leak Testing Facility
2.14.6 Atmospheric Control System
2.14.7 Drywell Cooling System
2.14.8 Flammability Control System
2.14.9 Suppression Pool Temperature Monitoring System

2.15 Structures and Servicing Systems
2.15.1 Foundation Work (2.15.10)
2.15.2 Turbine Pedestal (2.15.11)
2.15.3 Cranes and Hoists
2.15.4 Elevator
2.15.5 Heating, Ventilating and Air Conditioning
2.15.6 Fire Protection System
2.15.7 Floor Leakage Detection System
2.15.8 Vacuum Sweep System
2.15.9 Decontamination System
2.15.10 Reactor Building
2.15.11 Turbine Building
2.15.12 Control Building
2.15.13 Radwaste Building
2.15.14 Service Building

2.16 Yard Structures and Equipment
2.16.1 Stack
2.16.2 Oil Storage and Transfer System

2.17 Emergency Planning
2.17.1 Emergency Response Facilities

3.0 Additional Certified Design Material

3.1 Human Factors Engineering

3.2 Radiation Protection

3.3 Piping Design

3.4 Instrumentation and Control

3.5 Initial Test Program

3.6 Design Reliability Assurance Program

4.0 Interface Requirements

4.1 Ultimate Heat Sink

4.2 Offsite Power System (2.12.1)

4.3 Makeup Water Preparation System

4.4 Potable and Sanitary Water System (2.11.23)

4.5 Reactor Service Water System (2.11.9)

4.6 Turbine Service Water System (2.11.10)

4.7 Communication System (2.12.16)

4.8 Site Security

4.9 Circulating Water System (2.10.23)

4.10 Heating, Ventilating and Air Conditioning (2.15.5)

5.0 Site Parameters

Appendices

Appendix A Legend For Figures

Appendix B Abbreviations and Acronyms

Appendix C Conversion to ASME Standard Units

*** Underlined sections –Title only, no entry for design certification.**

**** Section number in parentheses – Section, under which the subject is covered.**

1.0 Introduction

This document provides the certified design material for the Advanced Boiling Water Reactor (ABWR); U.S. NRC Docket No. 52-001.

1.1 Definitions

The following definitions apply to terms used in the Design Descriptions and associated ITAAC:

Acceptance Criteria means the performance, physical condition, or analysis results for a structure, system, or component that demonstrates the Design Commitment is met.

Analysis means the calculation, mathematical computation, or engineering or technical evaluation. Engineering or technical evaluations could include, but are not limited to, comparisons with operating experience or design of similar structures, systems, or components.

As-built means the physical properties of the structure, system, or component following the completion of its installation or construction activities at its final location at the plant site.

Basic Configuration (for a Building)— means the arrangement of the building features (e.g., floors, ceilings, walls, basemat and doorways) and of the structures, systems, or components within, as specified in the building Design Description.

Basic Configuration (for a System)— means the functional arrangement of structures, systems, and components specified in the Design Description; and verifications for that system as specified in Section 1.2.

Containment means the Primary Containment System, unless explicitly stated otherwise.

Design Commitment means that portion of the Design Description that is verified by ITAAC.

Design Description means that portion of the design that is certified.

Division (for electrical systems/equipment) is the designation applied to a given safety-related system or set of components which are physically, electrically, and functionally independent from other redundant sets of components.

Division (for mechanical systems/equipment) is the designation applied to a specific set of safety-related components within a system.

Inspect or Inspection means visual observations, physical examinations, or review of records based on visual observation or physical examination that compare the structure, system, or component condition to one or more Design Commitments. Examples include walkdowns, configuration checks, measurements of dimensions, and non-destructive examinations.

Test means the actuation or operation, or establishment of specified conditions, to evaluate the performance or integrity of as-built structures, systems, or components, unless explicitly stated otherwise.

Type Test means a test on one or more sample components of the same type and manufacturer to qualify other components of that same type and manufacturer. A type test is not necessarily a test of the as-built structures, systems, or components.

1.2 General Provisions

The following general provisions are applicable to the Design Descriptions and associated ITAAC:

Verifications for Basic Configuration for Systems

Verifications for Basic Configuration of systems include and are limited to inspection of the system functional arrangement and the following inspections, tests, and analyses:

(1) Inspections, including non-destructive examination (NDE), of the as-built, pressure boundary welds for ASME Code Class 1, 2, or 3 components identified in the Design Description to demonstrate that the requirements of ASME Code Section III for the quality of pressure boundary welds are met.

(2) Type tests, analyses, or a combination of type tests and analyses of the Seismic Category I mechanical and electrical equipment (including connected instrumentation and controls) identified in the Design Description to demonstrate that the as-built equipment, including associated anchorage, is qualified to withstand design basis dynamic loads without loss of its safety function.

(3) Type tests, or type tests and analyses, of the Class 1E electrical equipment identified in the Design Description (or on accompanying figures) to demonstrate that it is qualified to withstand the environmental conditions that would exist during and following a design basis accident without loss of its safety function for the time needed to be functional. These environmental conditions, as applicable to the bounding design basis accident(s), are as follows: expected time-dependent temperature and pressure profiles, humidity, chemical effects, radiation, aging, submergence, and their synergistic effects which have a significant effect on equipment performance. As used in this paragraph, the term "Class 1E electrical equipment" constitutes the equipment itself, connected instrumentation and controls, connected electrical components (such as cabling, wiring, and terminations), and the lubricants necessary to support performance of the safety functions of the Class 1E electrical components identified in the Design Description, to the extent such equipment is not located in a mild environment during or following a design basis accident.

Electrical equipment environmental qualification shall be demonstrated through analysis of the environmental conditions that would exist in the location of the equipment during and following a design basis accident and through a determination that the equipment is qualified to withstand those

conditions for the time needed to be functional. This determination may be demonstrated by:

(a) Type testing of an identical item of equipment under identical or similar conditions with a supporting analysis to show that the equipment is qualified; or

(b) type testing of a similar item of equipment under identical or similar conditions with a supporting analysis to show that the equipment is qualified; or

(c) experience with identical or similar equipment under identical or similar conditions with supporting analysis to show that the equipment is qualified; or

(d) analysis in combination with partial type test data that supports the analytical assumptions and conclusions to show that the equipment is qualified.

(4) Tests or type tests of active safety-related motor-operated valves (MOVs) identified in the Design Description to demonstrate that the MOVs are qualified to perform their safety functions under design basis differential pressure, system pressure, fluid temperature, ambient temperature, minimum voltage, and minimum and/or maximum stroke times.

Treatment of Individual Items

The absence of any discussion or depiction of an item in the Design Description or accompanying figures shall not be construed as prohibiting a licensee from utilizing such an item, unless it would prevent an item from performing its safety functions as discussed or depicted in the Design Description or accompanying figures.

When the term “operate”, “operates”, or “operation” is used with respect to an item discussed in the Acceptance Criteria, it refers to the actuation and running of the item. When the term “exist”, “exists”, or “existence” is used with respect to an item discussed in the Acceptance Criteria, it means that the item is present and meets the Design Description.

Implementation of ITAAC

Inspections, Tests, Analyses, and Acceptance Criteria (ITAAC) are provided in tables with the following three-column format:

Design Commitment	Inspections, Tests, Analyses	Acceptance Criteria

Each Design Commitment in the left-hand column of the ITAAC tables has an associated Inspections, Tests, or Analyses (ITA) requirement specified in the middle

column of the tables. The identification of a separate ITA entry for each Design Commitment shall not be construed to require that separate inspections, tests, or analyses must be performed for each Design Commitment. Instead, the activities associated with more than one ITA entry may be combined, and a single inspection, test, or analysis may be sufficient to implement more than one ITA entry.

An ITA may be performed by the licensee of the plant, or by its authorized vendors, contractors, or consultants. Furthermore, an ITA may be performed by more than a single individual or group, may be implemented through discrete activities separated by time, and may be performed at any time prior to fuel load (including before issuance of the Combined Operating License for those ITAAC that do not necessarily pertain to as-installed equipment). Additionally, ITA may be performed as part of the activities that are required to be performed under 10CFR Part 50 (including, for example, the Quality Assurance (QA) program required under Appendix B to Part 50); therefore, an ITA need not be performed as a separate or discrete activity.

Discussion of Matters Related to Operations

In some cases, the Design Descriptions in this document refer to matters that relate to operation, such as normal valve or breaker alignment during normal operation modes. Such discussions are provided solely to place the Design Description provisions in context (e.g., to explain automatic features for opening or closing valves or breakers upon off-normal conditions). Such discussions shall not be construed as requiring operators during operation to take any particular action (e.g., to maintain valves or breakers in a particular position during normal operation).

Interpretation of Figures

In many but not all cases, the Design Descriptions in Section 2 include one or more figures, which may represent a functional diagram, general structural representation, or other general illustration. For I&C systems, the figures also represent aspects of the relevant logic of the system or part of the system. Unless specified explicitly, these Figures are not indicative of the scale, location, dimensions, shape, or spatial relationships of as-built structures, systems, or components. In particular, the as-built attributes of structures, systems, and components may vary from the attributes depicted on these figures, provided that those safety functions discussed in the Design Description pertaining to the figure are not adversely affected.

Rated Reactor Core Thermal Power

The rated reactor core thermal power for the ABWR is 3926 Mw_t.

2.0 Certified Design for ABWR Systems

This section provides the certified design material for each of the ABWR systems that is either fully or partially within the scope of the Certified Design.

2.1.1 Reactor Pressure Vessel System

Design Description

The Reactor Pressure Vessel (RPV) System consists of (1) the RPV and its appurtenances, supports and insulation, excluding the Loose Parts Monitoring System, and (2) the reactor internal components enclosed by the vessel, excluding the core (fuel assemblies, control rods, in-core nuclear instrumentation and neutron sources), reactor internal pumps (RIPs), and control rod drives (CRDs). The RPV System is located in the primary containment.

The reactor coolant pressure boundary (RCPB) portion of the RPV and its appurtenances (referred to in this section as the RPV pressure boundary) act as a radioactive material barrier during plant operation.

Certain reactor internals support the core, flood the core during a loss-of-coolant accident (LOCA) and support safety-related instrumentation. Other RPV internals direct coolant flow, separate steam, hold material surveillance specimens, and support instrumentation utilized for plant operation.

The RPV System provides guidance and support for the CRDs. It also distributes sodium pentaborate solution when injected from the Standby Liquid Control (SLC) System.

The RPV System restrains the CRD to prevent ejection of the control rod connected with the CRD in the event of a failure of the RCPB associated with the CRD housing weld. A restraint system is also provided for each RIP in order to prevent the RIP from becoming a missile in the event of a failure of the RCPB associated with the RIP casing weld.

The RPV System is shown on Figures 2.1.1a, 2.1.1b and 2.1.1c; key dimensions and the acceptable variations in these dimensions are presented in Table 2.1.1a. The RPV System parameters (break areas) used in LOCA analyses are identified in Table 2.1.1b. The principal design parameters for the RPV System are listed in Table 2.1.1c.

Reactor Pressure Vessel, Appurtenances, Supports and Insulation

The RPV, as shown in Figures 2.1.1a and 2.1.1b, is a vertical, cylindrical vessel of welded construction with removable top head and head closure bolting and seals. The main body of the installed RPV has a cylindrical shell, flange, bottom head, RIP casings, penetrations (including inserted housings), brackets, nozzles, and the shroud support, which has a pump deck forming the partition between the RIP suction and discharge. The shroud support is an assembly consisting of a short vertical cylindrical shell, a horizontal annular pump deck plate and vertical shroud support legs.

The CRD housings are inserted through and welded to the CRD penetrations in the reactor vessel bottom head. The CRDs are mounted into the CRD housings. The in-core housings are inserted through and connected to the bottom head.

For an RPV System that requires to be instrumented for flow-induced vibration (FIV) testing, a flanged nozzle is provided in the top head for bolting of the flange associated with the test instrumentation.

The integral reactor vessel skirt supports the vessel on the Reactor Pressure Vessel Pedestal. The vessel skirt does not have openings connecting the upper and lower drywell regions. Anchor bolts extend from the pedestal through the flange of the skirt. RPV stabilizers are provided in the upper portion of the RPV to resist horizontal loads. Lateral supports for the CRD housings and in-core housings are provided.

A restraint system is provided to prevent a RIP from being a missile in case of a postulated failure in the casing weld with the bottom head penetration. The restraint system is connected to the lugs on the RPV bottom head and the RIP motor cover.

The RPV insulation is supported from the reactor shield wall surrounding the vessel. Insulation for the upper head and flange is supported by a steel frame independent of the vessel and piping.

The RPV pressure boundary and the supports (RPV skirt, stabilizer and CRD housing/in-core housing lateral supports) are classified as Seismic Category I. These components are ASME Code Class 1 vessel and supports, respectively. The shroud support and a portion of the CRD housings inside the RPV are classified as Seismic Category I and ASME Code Class CS structures.

The following ASME materials (or their equivalents) are used in the RPV pressure boundary: SA-533, Type B, Class 1 (plate); SA-508, Class 3 (forging); SA-508, Class 1 (forging); SB-166 (UNS N06600, bar); SB-167 (UNS N06600, seamless pipe); SB-564 (UNS N06600, forging); SA-182 or SA-336, Grade/Class F316L (maximum carbon 0.020%, forging) or F316 (maximum carbon 0.020% and nitrogen from 0.060 to 0.120%, forging); and SA-540, Grade B23 or B24 (bolting).

A stainless steel weld overlay is applied to the interior of the RPV cylindrical shell and the steam outlet nozzles. Other nozzles and the RIP motor casings do not have cladding. The bottom head is clad with Ni-Cr-Fe alloy. The RIP penetrations are clad with Ni-Cr-Fe alloy or, alternatively, stainless steel.

The materials of the low alloy plates and forging used in construction of the RPV pressure boundary are melted using vacuum degassing to fine grain practice and are supplied in quenched and tempered condition.

Electroslag welding is not applied for the RPV pressure boundary welds. Preheat and interpass temperatures employed for welding of the RPV pressure boundary low alloy steel meet or exceed the values given in ASME Code Section III, Appendix D. Post-weld heat treatment at 593°C minimum is applied to these low-alloy steel welds.

The RPV pressure boundary welds are given an ultrasonic examination in addition to the radiographic examination performed during fabrication. The ultrasonic examination method, including calibration, instrumentation, scanning sensitivity, and coverage, is based on the requirements imposed by ASME Code Section XI, Appendix I. Acceptance standards also meet the requirements of ASME Code Section XI.

The fracture toughness tests of the RPV pressure boundary ferritic materials, weld metal and heat-affected zone (HAZ) are performed in accordance with the requirements for ASME Code Section III, Class 1 vessel. Both longitudinal and transverse specimens are used to determine the minimum upper-shelf energy (USE) level of the core beltline materials. The minimum USE level for base and weld metal in the core beltline is initially at least 10.4 kg·m. Separate, unirradiated baseline specimens are used to determine the transition temperature curve of the core beltline base materials, weld metal, and HAZ.

For the RPV material surveillance program, Charpy V-notch and tensile specimens are manufactured from the same material used in the reactor beltline region. To represent those RPV pressure boundary welds that are in the beltline region, Charpy V-notch specimens of weld metal and HAZ material, and tensile specimens of weld metal are manufactured from sample welds. The specimen capsules contain the specimens and temperature monitors. The surveillance specimen holders having brackets welded to the vessel cladding in the core beltline region are provided to hold four specimen capsules and a neutron dosimeter.

Reactor Pressure Vessel Internals

The major reactor internal components in the RPV System are:

(1) Core Support Structures:

Shroud, shroud support and a portion of CRD housings inside the RPV (both integral to the RPV), core plate, top guide, fuel supports (orificed fuel supports and peripheral fuel supports), and control rod guide tubes (CRGTs). The core support structures are classified as Seismic Category I and ASME Code Class CS structures.

(2) Other Reactor Internals:

(a) Feedwater spargers, shutdown cooling (SDC) and low pressure core flooder (LPFL) spargers for the Residual Heat Removal (RHR) System,

high pressure core flooder (HPCF) spargers and couplings, and a portion of the in-core housings inside the RPV and in-core guide tubes (ICGTs) with stabilizers. These components are classified as Seismic Category I and safety-related.

(b) Surveillance specimen holders, shroud head and steam separators assembly and the steam dryer assembly. These components are classified as non-safety-related.

A general assembly of these reactor internal components is shown in Figures 2.1.1a, 2.1.1b, and 2.1.1c.

The shroud support, shroud, and top guide make up a cylindrical assembly that provides a partition to separate the upward flow of coolant through the core from the downward recirculation flow. This partition separates the core region from the downcomer annulus.

The core plate consists of a circular plate with round openings and is stiffened with a rim and beam structure. The core plate provides lateral support and guidance for the CRGTs, ICGTs, peripheral fuel supports, and startup neutron sources. The last two items are also supported vertically by the core plate.

The top guide consists of a circular plate with square openings for fuel assemblies and with a cylindrical side forming an upper shroud extension. Each opening provides lateral support and guidance for four fuel assemblies or, in the case of peripheral fuel, less than four fuel assemblies. Holes are provided in the bottom, where the sides of the openings intersect, to anchor the in-core instrumentation detectors and startup neutron sources.

The fuel supports are of two types: (1) peripheral and (2) orificed. The peripheral fuel supports are located at the outer edge of the active core and are not adjacent to control rods. Each peripheral fuel support supports one peripheral fuel assembly and has an orifice to provide coolant flow to the fuel assembly. Each orificed fuel support holds four fuel assemblies and has four orifices to provide coolant flow distribution to each fuel assembly. The control rods pass through cruciform openings in the center of the orificed fuel supports. This locates the four fuel assemblies surrounding a control rod.

The CRGTs pass through holes in the core plate, have four holes under the core plate and rest on top of the CRD housings. Each CRGT guides the lower end of a control rod and supports an orificed fuel support such that the orifices of the orificed fuel support align with the holes in the CRGT for coolant flow. The lower end of the CRGT is supported by the CRD housing, which, in turn, transmits the weight of the guide tube, fuel supports, and fuel assemblies to the reactor vessel bottom head.

The CRGT base is provided with a device for coupling the CRD with it. The CRD is restrained from ejection, in the case of failure of the weld between a CRD housing and CRD penetration, by the coupling of the CRD with the CRGT base; in this event, the flange at the top of the guide tube contacts the core plate and acts to restrain the ejection. The coupling will also prevent ejection if the housing fails beneath the weld; in this event, the guide tube remains supported on the intact upper housing.

There are six feedwater spargers, three for each of the two feedwater lines. Each sparger is connected to an RPV feedwater nozzle at the double thermal sleeve fitted with the safe end (straight piece) of the nozzle. Feedwater flow enters the middle of the spargers, which are located above the RPV downcomer annulus, and is discharged inward.

Two spargers are provided for two loops of the RHR System; both spargers function as SDC and LPFL spargers. Each sparger is connected to a thermal sleeve fitted with the safe end of each SDC and LPFL inlet nozzle.

Two HPCF spargers with couplings are provided for the two loops of the HPCF System to direct high pressure coolant flow to the upper end of the core during emergency core cooling. One of the HPCF spargers also distributes sodium pentaborate solution when injected from the SLC System via the connecting HPCF line. The spargers are located inside the cylindrical portion of the top guide. Each sparger is connected via an HPCF coupling to a thermal sleeve fitted with the safe end of each HPCF inlet nozzle.

The ICGTs house the in-core neutron flux monitoring instrumentation assemblies, pass through holes in the core plate, and rest on top of the in-core housings. Two levels of stabilizer latticework give lateral support to the ICGTs. The ICGT stabilizers are connected to either the shroud or the shroud support.

The surveillance specimen holders having brackets welded to the vessel cladding in the core beltline region are provided to hold the specimen capsules and a neutron dosimeter.

The shroud head and steam separators assembly includes the connecting standpipes and forms the top of the core discharge mixture plenum. The steam dryer assembly removes moisture from the wet steam leaving the steam separators. The extracted moisture flows down the dryer vanes to the collecting troughs, then flows through tubes into the downcomer annulus.

Cobalt-base material is only used for hard surfacing of areas in HPCF coupling. The wrought austenitic stainless steel used for the RPV internals is limited to a maximum of 0.02% carbon content. Stainless steel materials are supplied in solution heat-treated condition. Furnace sensitized stainless steel material is not used. Electroslag welding is not applied for structural welds of stainless steel.

The RPV internals are designed to withstand the effects of FIV.

Inspections, Tests, Analyses and Acceptance Criteria

Table 2.1.1d provides a definition of the inspections, tests, and/or analyses, together with associated acceptance criteria, which will be undertaken for the Reactor Pressure Vessel System.

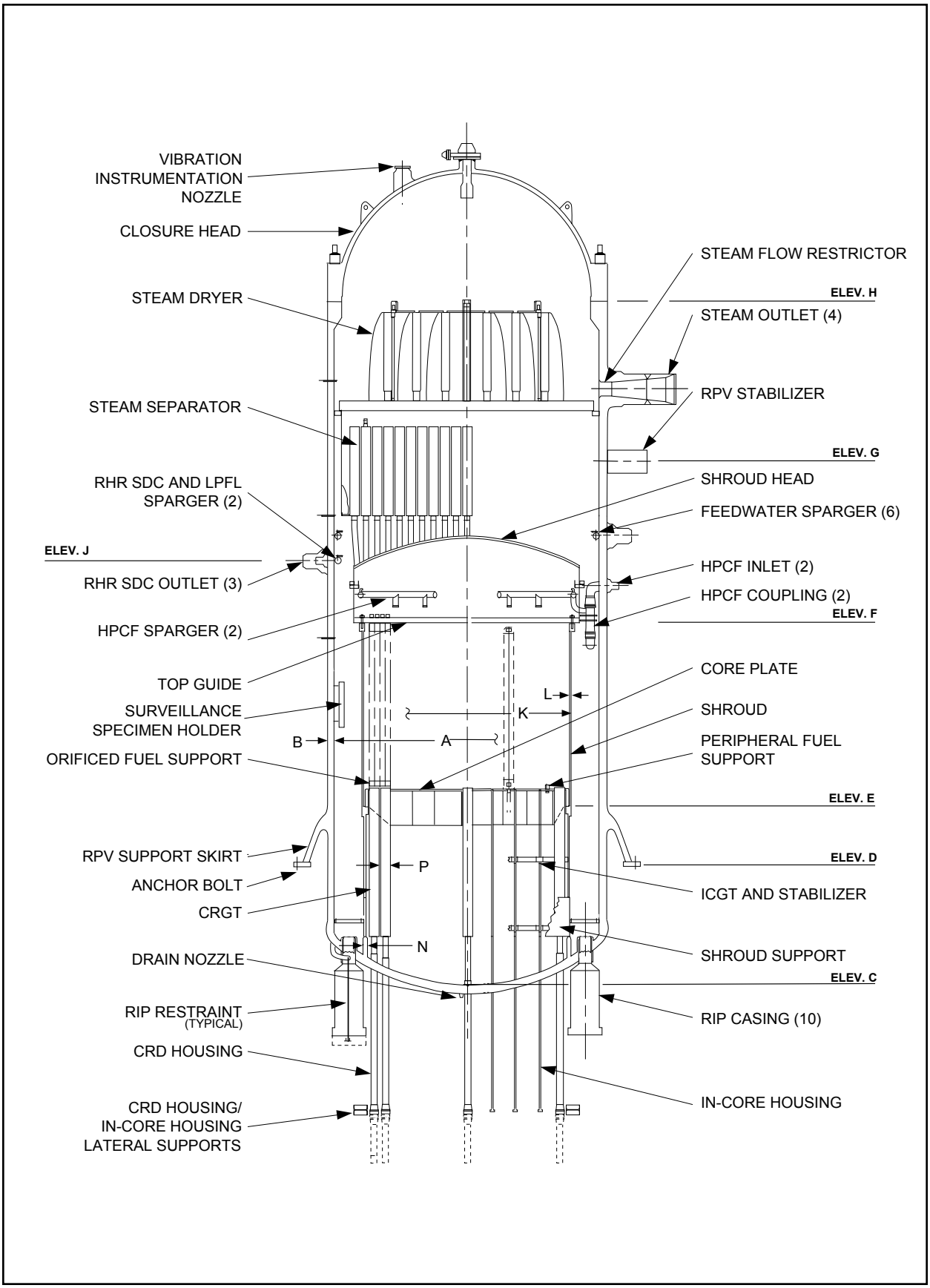

Figure 2.1.1a Reactor Pressure Vessel System Key Features

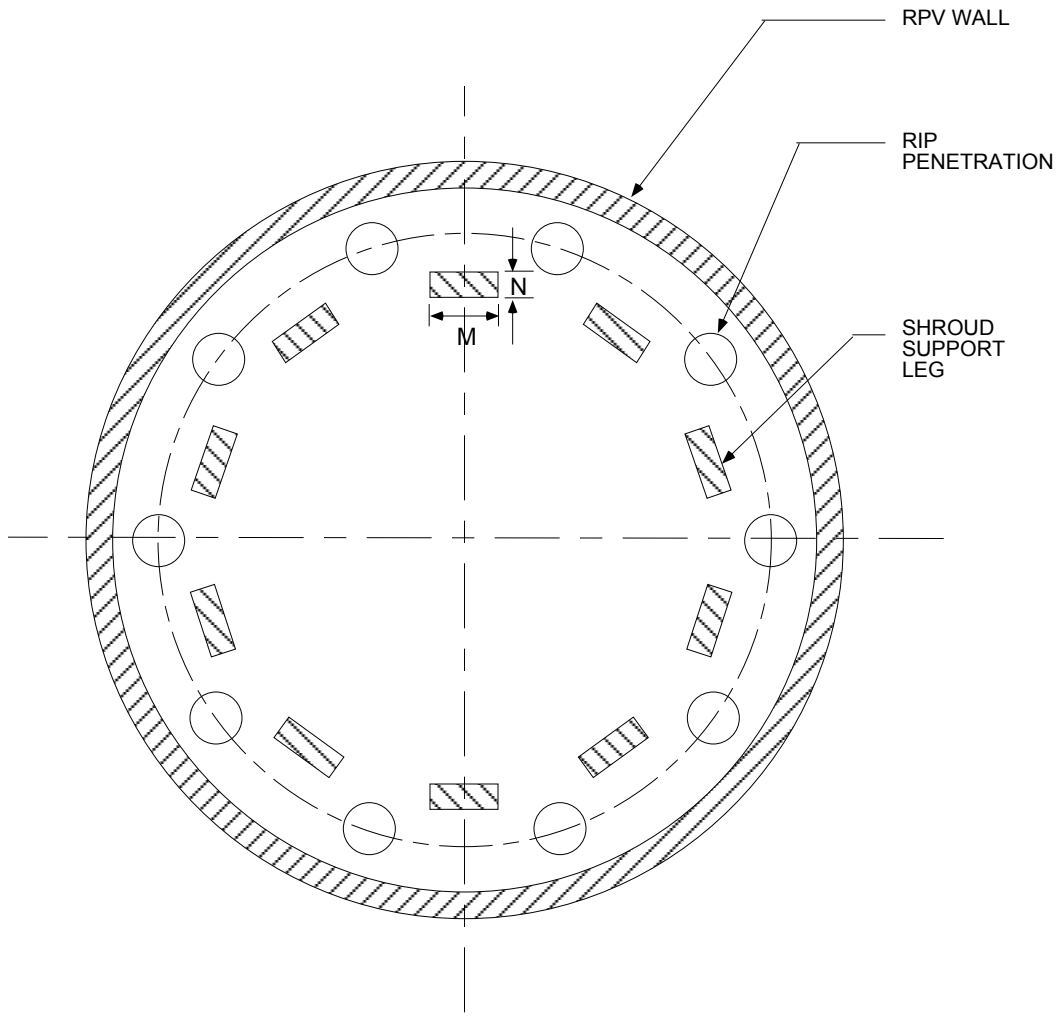

Figure 2.1.1b Pump Penetration and Shroud Support Leg Arrangement

NOTES:

1. THE ARRANGEMENT IS SHOWN FOR QUARTER CORE ONLY. ROTATIONAL SYMMETRY APPLIES. THE REACTOR INTERNALS ACCOMMODATE THE SHOWN CORE ARRANGEMENT; THE CORE IS NOT A PART OF THE RPV SYSTEM.

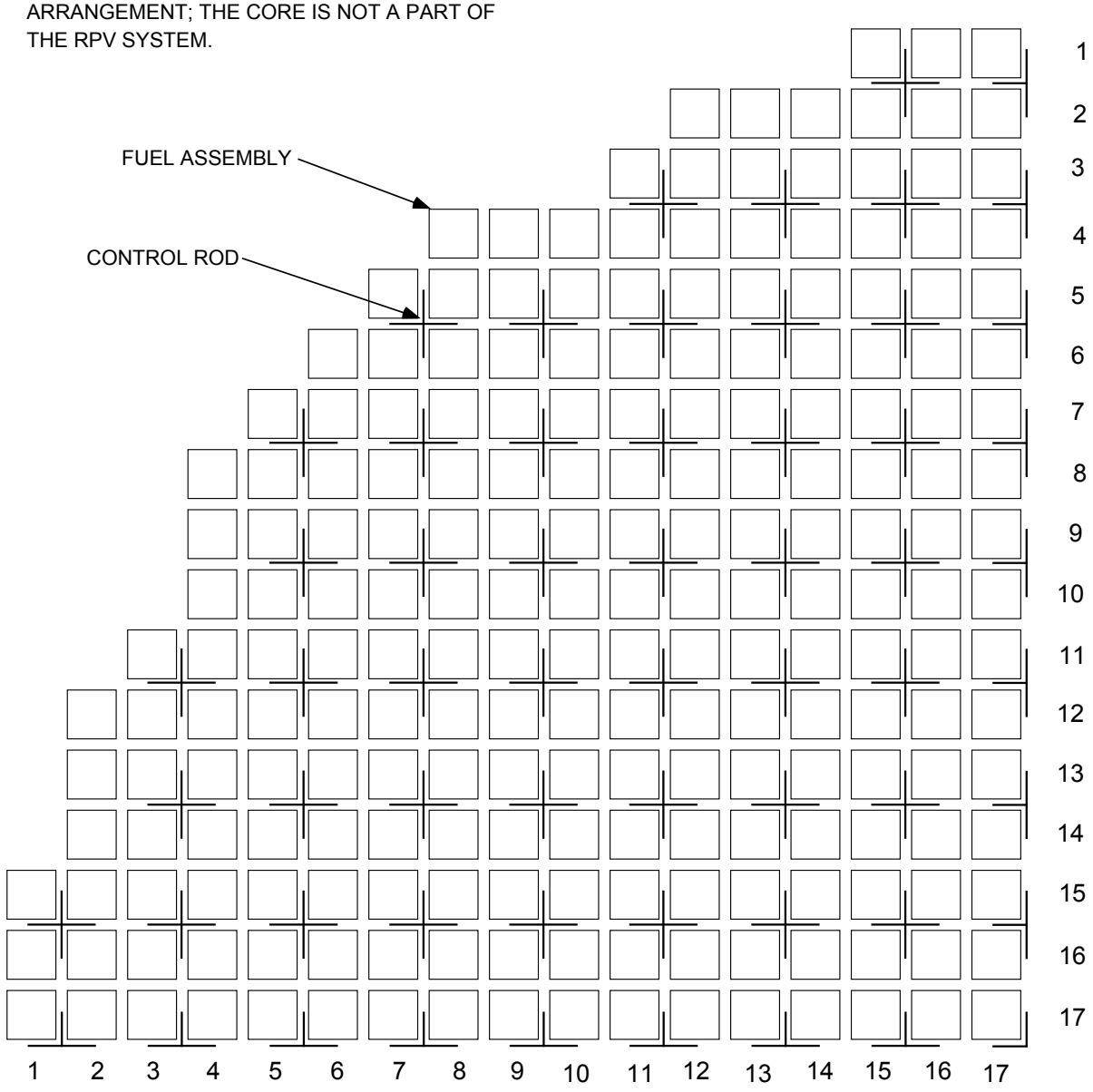

Figure 2.1.1c Core Arrangement

Table 2.1.1a Key Dimensions of RPV System Components and Acceptable Variations

Description	Dimension/ Elevation (Figure 2.1.1a)	Nominal Value (mm)	Acceptable Variation (mm)
RPV inside diameter (inside cladding)	A	7112.0	±51.0
RPV wall thickness in beltline (without cladding)	B	174.0	+20.0/–4.0
RPV bottom head inside invert, Elevation	C	0.0	Reference 0.0
RPV support skirt bottom, Elevation	D	3250.0	±75.0
Core plate support/Top of shroud middle flange, Elevation	E	4695.2	±15.0
Top guide support/Top of shroud top flange, Elevation	F	9351.2	±20.0
RPV stabilizer connection, Elevation	G	13,766.0	±20.0
Top of RPV flange, Elevation	H	17,703.0	±65.0
RHR SDC/CUW Outlet Nozzle, Elevation	J	10,921.0	±40.0
Shroud outside diameter	K	5600.7	±25.0
Shroud wall thickness	L	57.2	±10.0
Shroud support legs (Fig. 2.1.1b)	MxN	662.0x153.0	±20.0 for M ±10.0 for N
Control rod guide tube outside diameter	P	273.05	±5.0

Table 2.1.1b RPV System Parameters Used in LOCA Analyses

Line	Inspection Location	Postulated Break Area, mm^2
Steamline	Flow restrictor throat diameter in a steam outlet nozzle.	98,480
Feedwater	Inside diameters of flow nozzles on the spargers of a feedwater line for the total flow area.	83,890
RHR Injection	Inside diameters of flow nozzles on an SDC and LPFL sparger for the total flow area.	20,530
High Pressure Core Flooder	Inside diameters of flow nozzles on an HPCF sparger for the total flow area.	9200
RHR Shutdown Cooling	Inside diameter of an RHR SDC outlet nozzle at the safe end weld.	79,150
Drain	Inside diameter of the bottom head hole for the drain outlet nozzle, near the inside surface of the head and below the hole chamfer.	2030

Note: The areas calculated from the inspections shall not exceed the postulated break areas by 5%.

Table 2.1.1c Principal Design Parameters for RPV System

Description	Value
RCPB design pressure (MPaG)	8.62
RCPB design temperature (°C)	302
Number of fuel assemblies	872
Number of control rods	205
Number of internal pumps	10

Table 2.1.1d Reactor Pressure Vessel System

Inspections, Tests, Analyses and Acceptance Criteria		
Design Commitment	**Inspections, Tests, Analyses**	**Acceptance Criteria**
1. The basic configuration of the RPV System is as defined as Section 2.1.1.	1. Inspections of the as-built RPV System will be conducted.	1. The RPV System conforms with the basic configuration defined in Section 2.1.1.
2. The RPV pressure boundary defined in Section 2.1.1 is designed to meet the ASME Code Class 1 vessel requirements.	2. Inspections of the ASME Code required documents will be conducted.	2. An ASME Code Certified Stress Report exists for the RPV pressure boundary components.
3. The ASME Code components of the RPV System retain their pressure boundary integrity under internal pressure that will be experienced during service.	3. A hydrostatic test will be conducted on those code components of the RPV System required to be hydrostatically tested by the ASME Code.	3. The results of the hydrostatic test of the ASME Code components of the RPV System conform with the requirements in the ASME Code, Section III.
4. The materials selection and materials testing requirements for the RPV System are as defined in Section 2.1.1.	4. Inspections of the as-built RPV System will be conducted.	4. The RPV System conforms with the materials selection and materials testing requirements defined in Section 2.1.1.
5. The fabrication process and examination process requirements for the RPV System are as defined in Section 2.1.1.	5. Inspections of the as-built RPV System will be conducted.	5. The RPV System conforms with the fabrication process and examination process requirements defined in Section 2.1.1.
6. The material surveillance commitments for the reactor pressure vessel core beltline materials are as defined in Section 2.1.1.	6. Inspections of the as-built RPV System will be conducted for implementation of the material surveillance commitments.	6. The material surveillance program for the reactor pressure vessel core beltline materials conforms with the commitments defined in Section 2.1.1.
7. The RPV internals withstand the effects of FIV.	7. A vibration type test will be conducted on the prototype RPV internals of an ABWR. A flow test and post-test inspections will be conducted on the as-built RPV internals.	7. A vibration type test report exists and concludes that the prototype RPV internals have no damage or loose parts as a result of the vibration type test. The as-built RPV internals have no damage or loose parts.

2.1.2 Nuclear Boiler System

Design Description

General System Description

The primary functions of the Nuclear Boiler System (NBS) are:

(1) Deliver steam from the Reactor Pressure Vessel (RPV) to the Main Steam (MS) System.

(2) Provide containment isolation of the main steamlines (MSLs) and the feedwater (FW) lines.

(3) Deliver feedwater from the Condensate, Feedwater, and Condensate Air Extraction (CFCAE) System to the RPV.

(4) Provide overpressure protection of the reactor coolant pressure boundary (RCPB).

(5) Provide automatic depressurization of the RPV in the event of a loss- of-coolant accident (LOCA) where the RPV does not depressurize rapidly and the high pressure makeup systems fail to adequately maintain the water level in the RPV.

(6) Provide instrumentation to monitor the drywell pressure and RPV pressure, metal temperature, and water level.

Figures 2.1.2a, 2.1.2b, 2.1.2c, 2.1.2d, and 2.1.2e show the basic system configuration and scope. Figure 2.1.2f shows the NBS control interfaces.

The NBS equipment shown on Figures 2.1.2a, 2.1.2b, 2.1.2c, 2.1.2d, and 2.1.2e is classified as safety-related except for the non-safety-related part of the MSL drains, equipment associated with the power actuated relief mode of the SRVs, the SRV discharge pipe temperature sensors, and the non-safety-related instruments shown on Figure 2.1.2e.

Main Steam Lines

The MSLs direct steam from the RPV to the MS System. The NBS contains only the portion of the MSLs from their connection to the RPV to the boundary with the MS System, which occurs at the seismic interface located downstream of the outboard main steam isolation valves (MSIVs). Figures 2.1.2a and 2.1.2b show the general configuration of the MSLs and the MSL drain lines. The MSL drain lines provide a flow path for the MSIV leakage during an accident.

The combined volume of the steamlines, from the RPV to the main steam turbine stop valves and turbine bypass valves, is greater than or equal to 113.2 m^3.

Each MSL has a flow limiter. The MSL flow limiter consists of a flow restricting venturi which is located in each RPV MSL outlet nozzle. The restrictor limits the coolant blowdown rate from the RPV, in the event that a MSL break occurs outside the containment, to a flow rate equal to or less than 200% of rated steam flow at 7.07 MPaG upstream pressure. The throat diameter of each MSL flow limiter is less than or equal to 355 mm.

The pneumatic-operated valve in the MSL drain line shown in Figure 2.1.2.b opens, if either electric power to the valves actuating solenoid is lost, or pneumatic pressure to the valve is lost.

The MSLs and the MSL drain lines are located in the drywell and the steam tunnel.

Main Steam Isolation Valves

Two isolation valves are located in a horizontal run of each of the four main steamlines; one valve is inside of the drywell, and the other is near the outside of the primary containment pressure boundary.

The MSIV closing time is equal to or greater than 3 seconds and less than or equal to 4.5 seconds when N_2 or air is admitted to the MSIV actuator. The MSIVs are capable of closing within 3 to 4.5 seconds under differential pressure, fluid flow and temperature conditions. When all the MSIVs are closed, the combined leakage through the MSIVs for all four MSLs is less than or equal to 66.1 liters per minute at standard temperature (20°C) and pressure (one atmosphere absolute pressure) with the differential pressure across the MSIV equal to, or greater than 0.17 MPa.

The MSIV's primary actuation mechanism for opening and closing is pneumatic. Springs close the MSIV if pneumatic pressure to the MSIV actuator is lost.

Feedwater Lines

The FW lines direct feedwater from the CFCAE System to the RPV. The NBS contains only the portion of the FW lines from the seismic interface located upstream of the motor-operated valves (MOVs) to their connections to the RPV. Figure 2.1.2c shows the portion of the FW lines within the NBS.

Isolation of each FW line is accomplished by two containment isolation valves consisting of one check valve inside the drywell and one positive closing check valve outside the containment. The FW line isolation check valves are qualified to withstand a FW line break outside the primary containment. The FW line upstream of the outboard isolation valve contains an MOV and a seismic interface restraint.

Safety/Relief Valves

The safety/relief valves (SRVs) are located on the MSLs between the RPV and the inboard MSIV. These valves protect against overpressurization of the RCPB. Figures 2.1.2a, 2.1.2b and 2.1.2d show the general configuration of the SRVs and the SRV discharge lines.

The rated capacity of the SRVs is sufficient to prevent a rise in pressure within the RPV of more than 110% of the design pressure (9.48 MPaG) for design basis events.

The SRV discharge lines are sized so that critical flow conditions occur through the valve. Each SRV has its own discharge line. The SRV discharge lines terminate at quenchers located below the surface of the suppression pool.

The SRVs provide three main protection functions:

(1) Overpressure safety operation: The valves function as spring-loaded safety valves and open to prevent RCPB overpressurization. The valves are self-actuated by inlet steam pressure.

The following table identifies the SRV spring set pressures and flow capacities. The opening time for the SRVs, from the time the pressure exceeds the valve set pressure to the time the valve is fully open, is less than or equal to 0.3 seconds.

Set Pressures and Capacities

SRVs	Number* of Valves	Nameplate Spring Set Pressure (MPaG)†	ASME Rated Capacity at 103% Spring Set Pressure (kg/h each)‡	Used For ADS
J, P	2	7.92	395,000	
B, G, M, S	4	7.99	399,000	
D, E, K, U	4	8.06	402,000	
C, H, N, T	4	8.13	406,000	X
A, F, L, R	4	8.20	409,000	X

* Eight of the SRVs serve in the automatic depressurization system function.

† Spring set pressure tolerances as permitted by the ASME Boiler and Pressure Vessel Code, Section III.

‡ Minimum capacity per the ASME Boiler and Pressure Vessel Code, Section III.

(2) Overpressure relief operation: The valves are opened using a pneumatic actuator upon receipt of an automatic or manually initiated signal.

For overpressure relief valve operation (power-actuated mode), reactor vessel pressure sensors generate a high pressure trip signal which is used to initiate opening the SRVs. Valve opening is initiated when an electrical signal is received at the solenoid valve associated with power actuated relief (Figure 2.1.2d). The SRV relief mode opening time from the receipt of signal at the valve actuator to the full ASME lift position is less than or equal to 0.25 seconds when the SRV inlet pressure is at or above 6.89 MPaG.

The SRV pneumatic operator is so arranged that, if it malfunctions, it does not prevent the SRV from opening when steam inlet pressure reaches the spring lift setpoint. Each SRV is provided with its own pneumatic accumulator and inlet check valve for power actuated relief as shown in Figure 2.1.2d.

The SRVs are either DC powered, or powered from uninterruptible AC.

(3) Automatic depressurization system (ADS) operation: The ADS valves open automatically or manually in the power actuated mode when required during a loss-of-coolant accident (LOCA). Eight of the eighteen SRVs are designated as ADS valves and are capable of operating from either ADS LOCA logic or overpressure relief logic signals. The above table identifies the ADS SRVs.

The ADS accumulator capacity can open the SRV with the drywell pressure at design pressure following failure of the pneumatic supply to the accumulator.

The SRVs can be operated individually in the power-actuated mode by remote manual switches located in the main control room. They are provided with position sensors which provide positive indication of SRV disk/stem position.

Automatic Depressurization System

As shown in Figure 2.1.2f, the NBS channel measurements are provided for the Safety System Logic and Control (SSLC) for signal processing, setpoint comparisons, and generating trip signals. Except for the pump running permissive, the SSLC uses a two-out-of-four voting logic for ADS initiation. The ADS logic is automatically initiated when a low reactor water level signal is present. If the RPV low water level signal is present concurrently with high drywell pressure signal, both the main ADS timer (less than or equal to 29 seconds) and the high drywell pressure bypass timer (less than or equal to 8 minutes) are initiated. Absent a concurrent high drywell pressure signal, only the ADS high drywell pressure bypass timer is initiated. Upon the time out of the ADS high drywell pressure bypass timer, concurrent with RPV low water level signal, the main ADS timer is initiated, if not already initiated. The main timer continues to completion and times out only in the continued presence of an RPV low water level signal. Upon time out of the main ADS timer, concurrent with positive indication by pump discharge pressure of at least one RHR or one HPCF pump running, the ADS function is initiated.

Signals from all four divisions for low reactor water level and high drywell pressure and Division I control logic signal actuate one set of pilots, and sensors from all four divisions for low reactor water and high drywell pressure and Division II control logic signal actuate the second set of pilots, either of which initiates the opening of the ADS SRVs.

ADS initiation is accomplished by redundant trip channels arranged in two divisionally separated logics that control two separate solenoid-operated pneumatic pilots on each ADS SRV. Either pilot can operate the ADS valve. These pilots control the pneumatic pressure applied by the accumulators and the High Pressure Nitrogen Gas Supply (HPIN) System. The DC power for the logic is obtained from the SSLC Divisions I and II.

For anticipated transient without scram (ATWS) mitigation, the ADS has an automatic and manual inhibit of the automatic ADS initiation. Automatic initiation of ADS is inhibited unless there is a coincident low reactor water level signal and an average power range monitors (APRMs) ATWS permissive signal from the Neutron Monitoring System. There are main control room switches for the manual inhibit of automatic initiation of ADS.

The ADS can also be initiated manually. On a manual initiation signal, concurrent with positive indication of at least one RHR or one HPCF pump is running, the ADS function is initiated.

NBS Instrumentation

The NBS contains the instrument lines and instrumentation for monitoring the reactor pressure and water level. For drywell pressure, turbine inlet pressure, main condenser vacuum, and RPV metal temperature, the NBS contains the sensors. Figure 2.1.2e shows the drywell pressure and RPV instrumentation in the NBS.

The mechanical portion of each division of the safety-related NBS instrumentation located in the Reactor Building is physically separated from the other divisions.

The reactor vessel outside surface (metal) temperatures are measured at the head flange and the bottom head locations.

Figure 2.1.2e shows the water level instrumentation. The instruments that sense the water level are differential pressure devices calibrated for specific RPV pressure and temperature conditions. Instrument zero for the RPV water level ranges is the top of the active fuel. The RPV water level instrumentation considers the effects of dissolved non-condensable gasses in the RPV water level instrumentation lines.

With the exception of turbine inlet pressure sensor and main condenser vacuum sensor located in the Turbine Building, the NBS instrumentation is located in the drywell, the steam tunnel and the Reactor Building.

Other Provisions

The NBS equipment identified as safety-related is classified as Seismic Category I except for the American Society of Mechanical Engineers (ASME) Class 3 equipment shown on Figure 2.1.2c. The non-safety-related section of the feedwater lines between the seismic interface restraint and the motor-operated valves shown in Figure 2.1.2c is classified as Seismic Category I. The MSL drain lines from the MSLs to the Main Condenser are seismically analyzed to withstand the Safe Shutdown Earthquake (SSE).

Figures 2.1.2a, 2.1.2b, 2.1.2c, 2.1.2d and 2.1.2e show the ASME Boiler and Pressure Vessel Code classes.

The divisional equipment in the NBS is powered from its respective Class 1E divisions as shown in Figures 2.1.2b, 2.1.2d, and 2.1.2e. In the NBS, independence is provided between Class 1E divisions, and also between Class 1E divisions and non-Class 1E equipment.

The NBS has the following displays and controls in the main control room:

(1) Parameter displays for the instruments shown on Figures 2.1.2b and 2.1.2e. This includes the reactor vessel pressure, reactor vessel water level, drywell pressure, main condenser vacuum, and turbine inlet pressure.

(2) Controls and status indication for the active safety-related components shown on Figures 2.1.2b, 2.1.2c (excluding the inboard FW line check valves, and the ASME Boiler and Pressure Vessel Code Class 2 check valves), and 2.1.2d.

(3) Manual system level initiation capability for the ADS.

(4) Manual capability to inhibit automatic initiation of the ADS.

NBS components with displays and control interfaces with the Remote Shutdown System (RSS) are shown on Figures 2.1.2a and 2.1.2e.

The safety-related electrical equipment (including instrumentation and controls) shown on Figures 2.1.2b, 2.1.2c, 2.1.2d, and 2.1.2e located in the containment, steam tunnel and Reactor Building, is qualified for a harsh environment.

The MOVs shown on Figure 2.1.2b (except for the ASME Boiler and Pressure Vessel Code Class 2 MOV) have an active safety-related function to close, and perform this function under differential pressure, fluid flow, and temperature conditions.

The check valves (CVs) shown on Figures 2.1.2c and 2.1.2d (ADS pneumatic CVs only) have the safety–related functions to open, close, or both open and close under system pressure, fluid flow, and temperature conditions.

Inspections, Tests, Analyses and Acceptance Criteria

Table 2.1.2 provides a definition of the inspections, tests and/or analyses, together with associated acceptance criteria, which will be undertaken for the NBS.

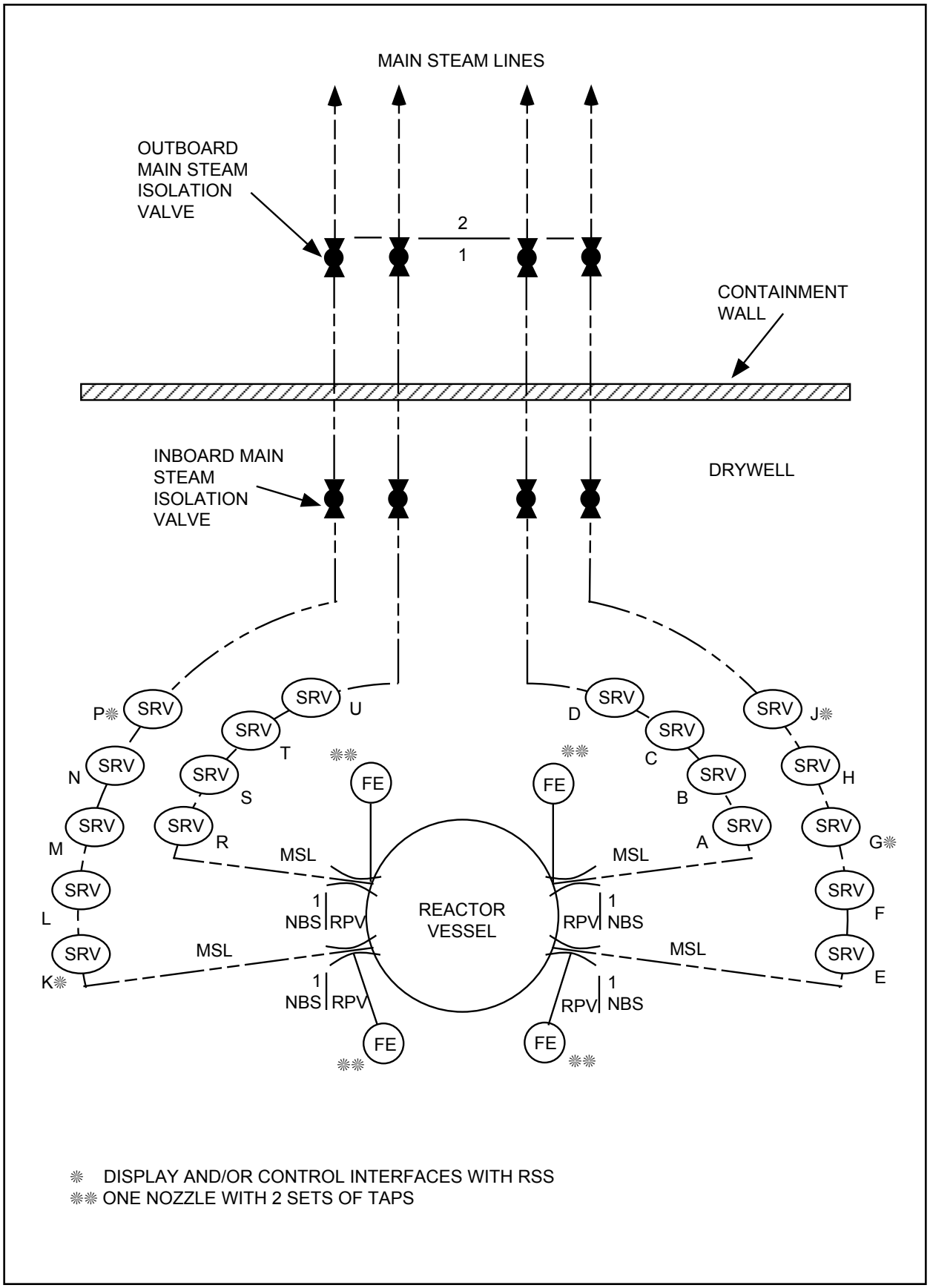

Figure 2.1.2a NBS Safety/Relief Valves and Steamline

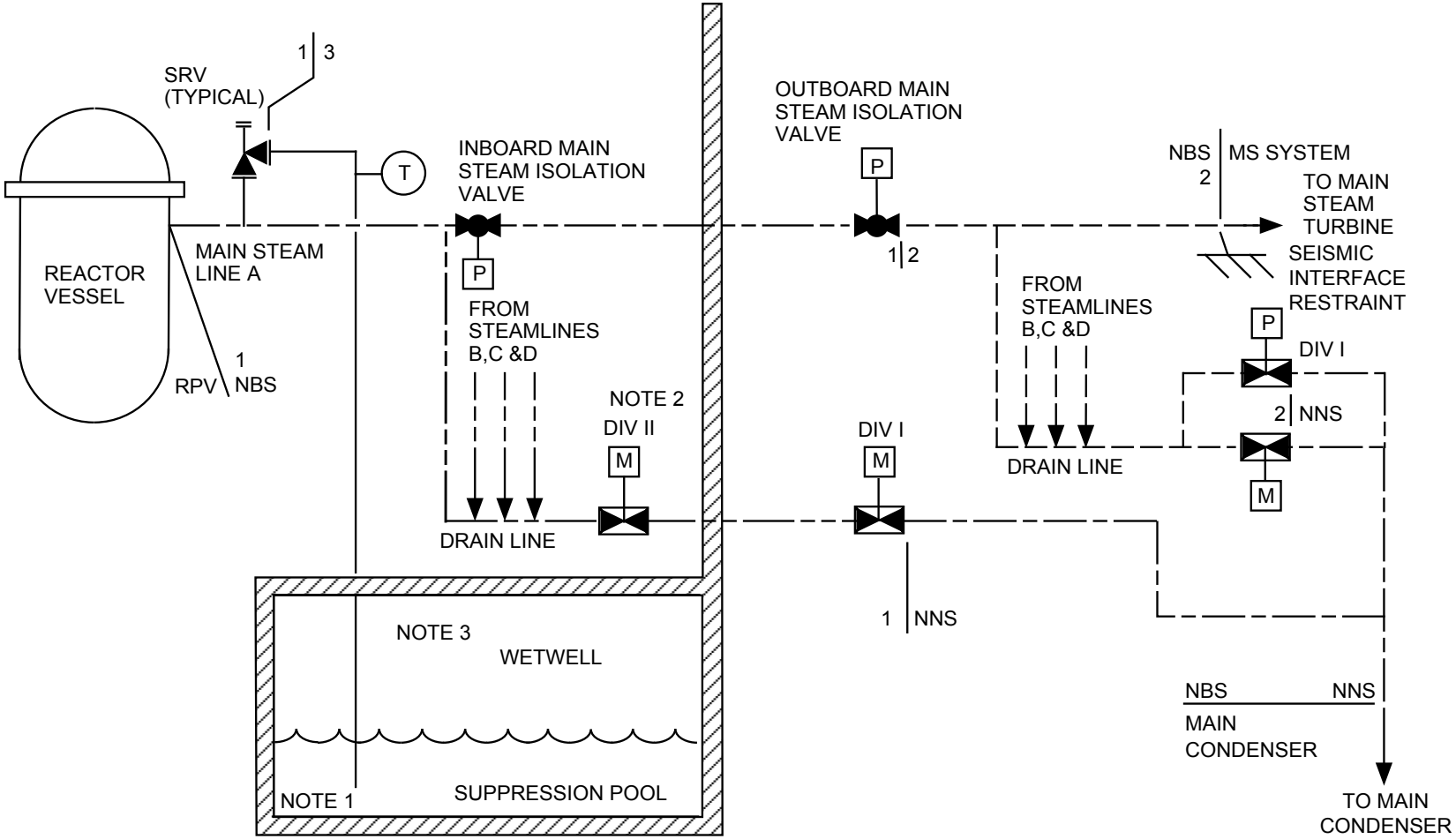

NOTES:
1. AT MINIMUM LEVEL
2. MAY BE PNEUMATIC
3. THE PIPING PRESSURE WELDS IN THE WETWELL AIRSPACE SHALL BE EXAMINED USING ASME CODE CLASS 2 REQUIREMENTS.
4. EACH MSIV HAS CLASS 1E POSITION SWITCHES WHICH RECEIVE POWER FROM ITS RESPECTIVE CLASS 1E DIVISION.
5. EACH SRV HAS POSITION SENSORS.
6. THE RCIC SYSTEM STEAM SUPPLY COMES FROM MAIN STEAM LINE B UPSTREAM OF THE INBOARD MSIV.

Figure 2.1.2b NBS Steamline

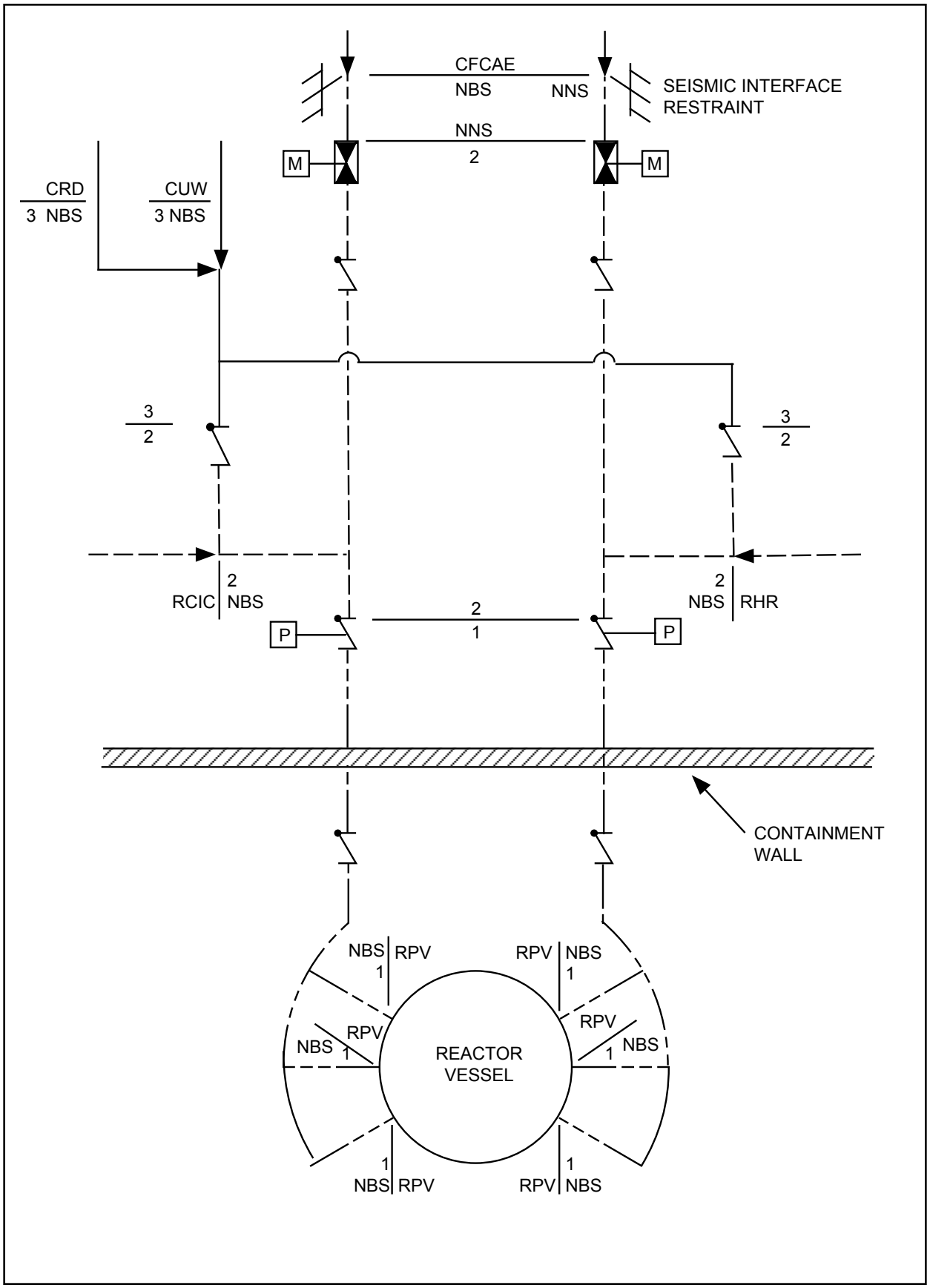

Figure 2.1.2c NBS Feedwater Line

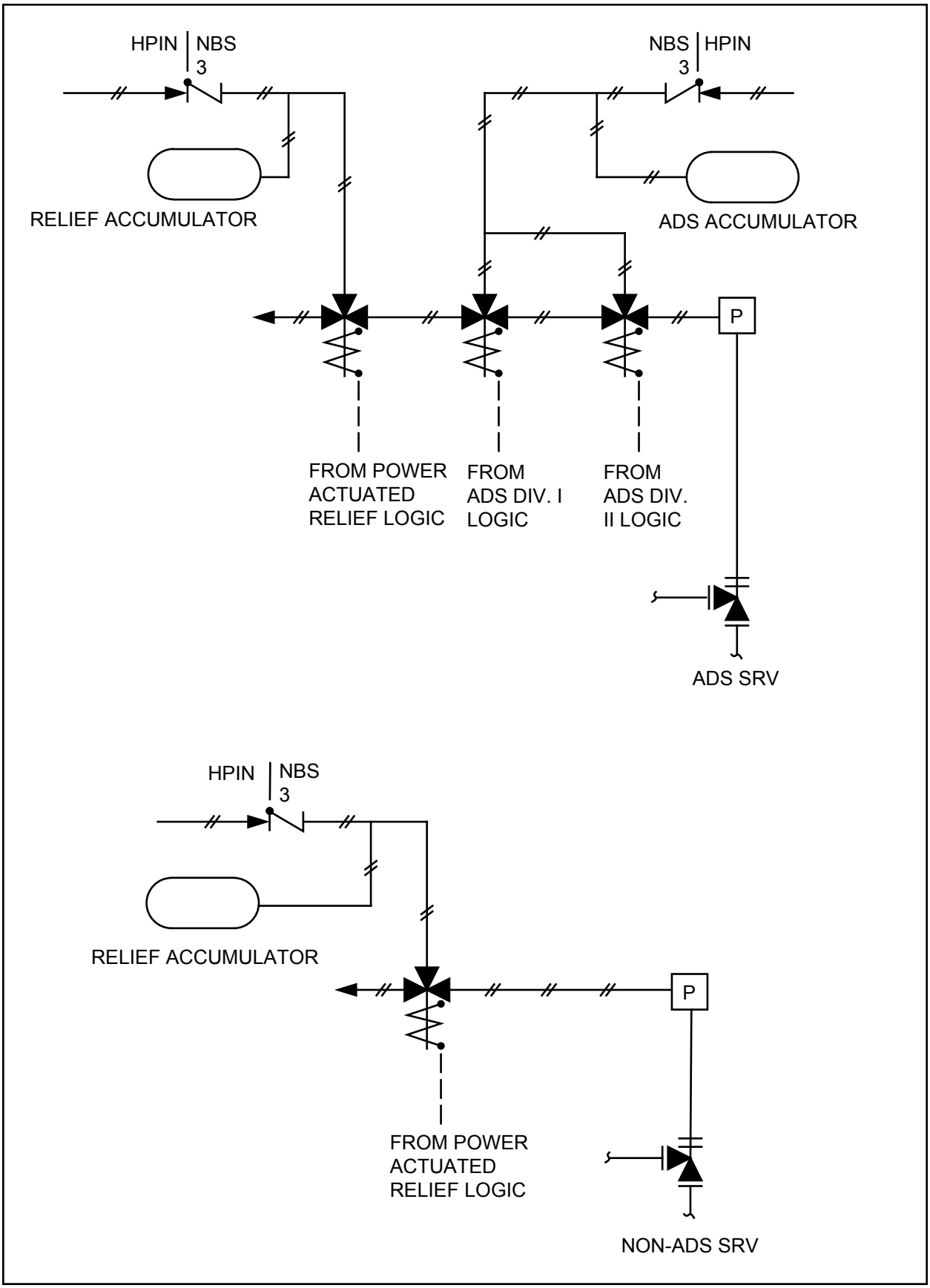

Figure 2.1.2d NBS Safety/Relief Valve Pneumatic Lines

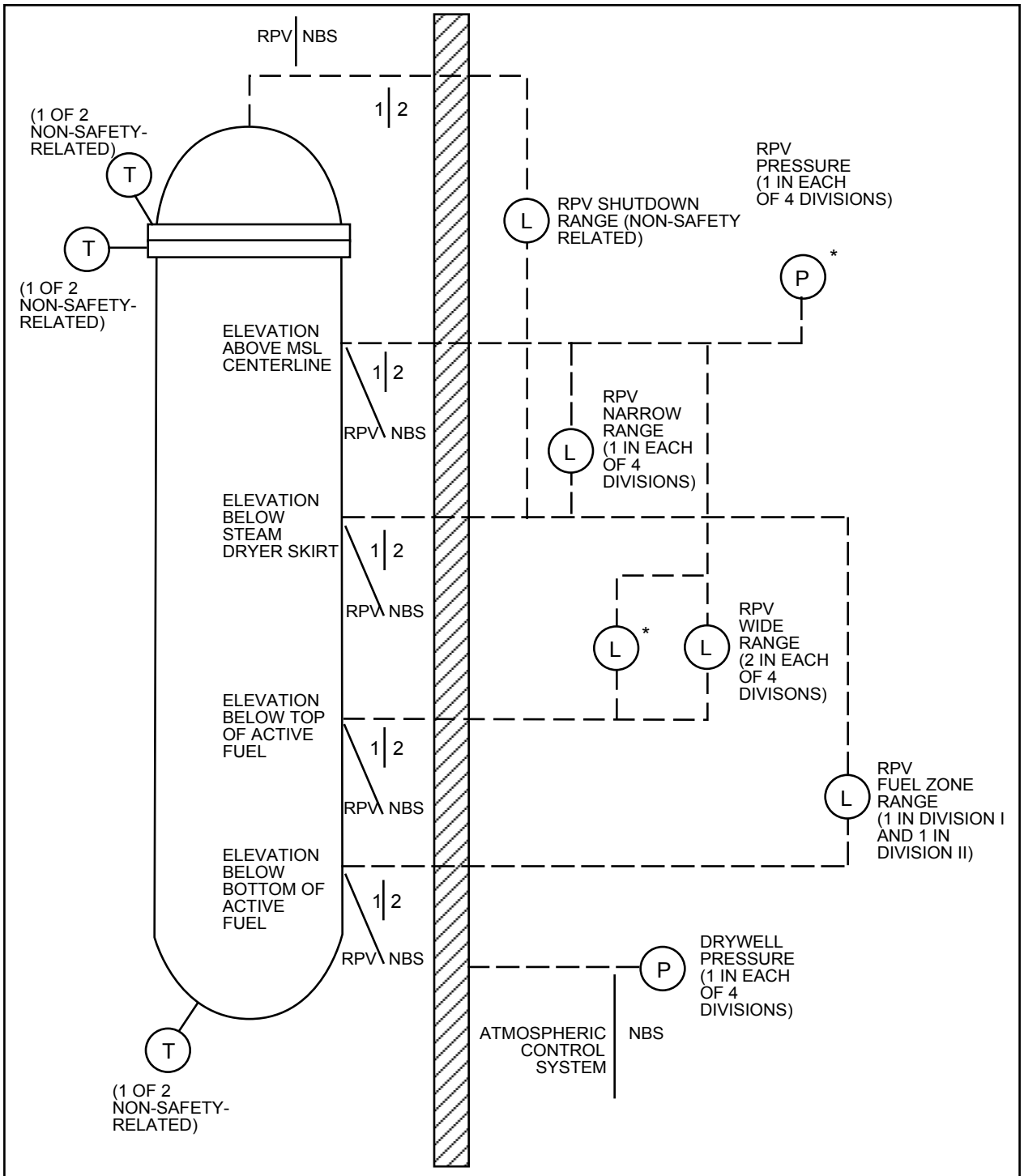

* DISPLAY AND/OR CONTROL INTERFACES WITH RSS (2 OF 4 DIVISIONS)

NOTES:
1. EACH OF FOUR DIVISIONS OF NBS INSTRUMENTATION HAS ONE TURBINE INLET PRESSURE SENSOR AND ONE MAIN CONDENSER VACUUM SENSOR.
2. EACH DIVISION IS POWERED BY ITS RESPECTIVE CLASS 1E DIVISION.
3. THE MAIN CONDENSER VACUUM SENSORS ARE LOCATED ABOVE THE TURBINE BUILDING DESIGN BASIS FLOOD LEVEL.

Figure 2.1.2e NBS Drywell Pressure and Reactor Vessel Instrumentation

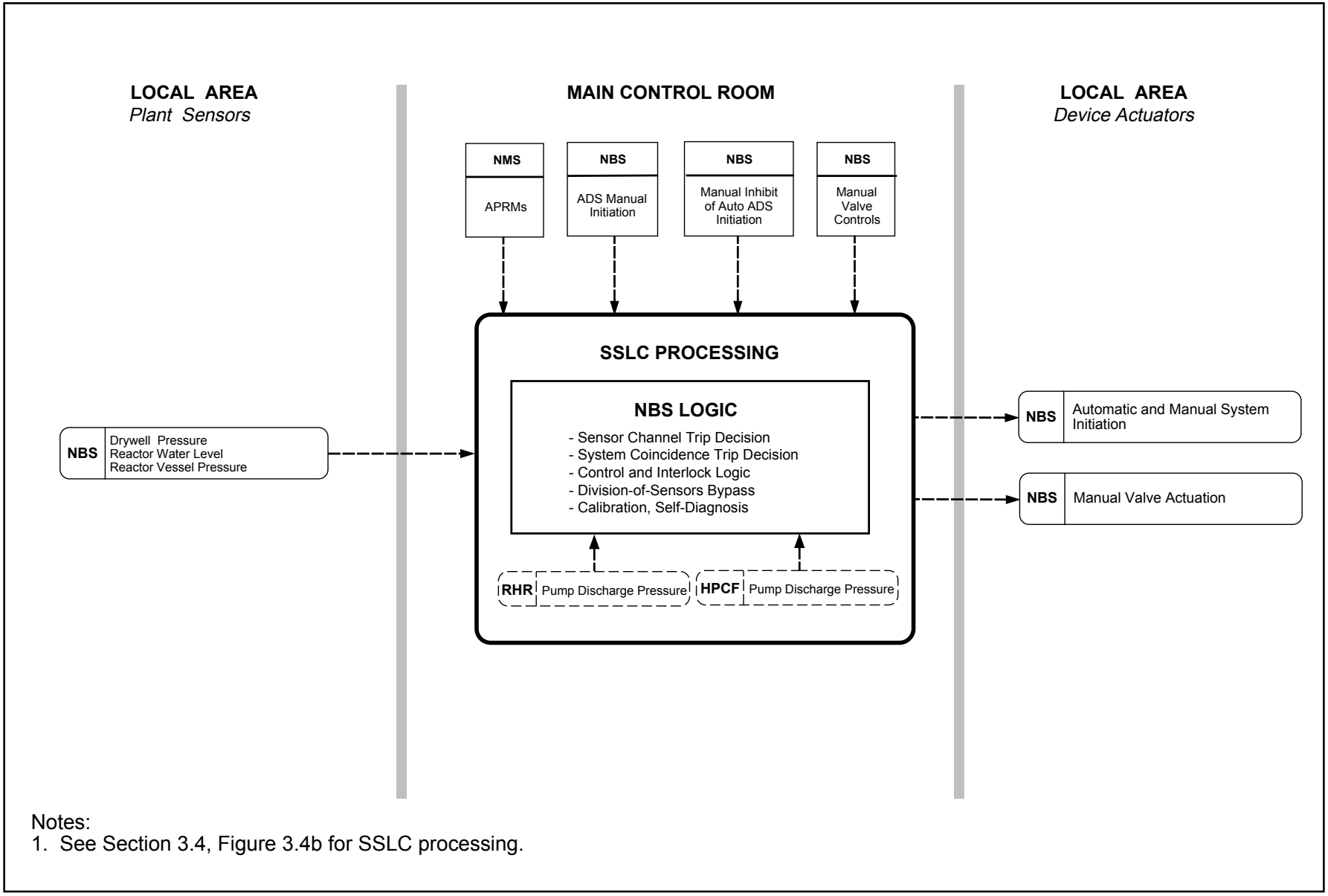

Notes:
1. See Section 3.4, Figure 3.4b for SSLC processing.

Figure 2.1.2f Nuclear Boiler System Control Interface Diagram

Table 2.1.2 Nuclear Boiler System

Inspections, Tests, Analyses and Acceptance Criteria		
Design Commitment	**Inspections, Tests, Analyses**	**Acceptance Criteria**
1. The basic configuration of the NBS is shown in Figures 2.1.2a, 2.1.2b, 2.1.2c, 2.1.2d, 2.1.2e, and 2.1.2f.	1. Inspections will be conducted for the NBS System.	1. The as-built NBS conforms with the basic configuration shown in Figures 2.1.2a, 2.1.2b, 2.1.2c, 2.1.2d, 2.1.2e, and 2.1.2f.
2. The ASME Code components of the NBS System retain their pressure boundary integrity under internal pressures that will be experienced during service.	2. A hydrostatic test will be conducted on those Code components of the NBS required to be hydrostatically tested by the ASME Code.	2. The results of the hydrostatic test of the ASME Code components of the NBS conform with the requirements in the ASME Code, Section III
3. The combined volume of the four main steamlines (MSLs) and branch lines from the RPV to the main steam turbine stop valves and turbine bypass valves is greater than or equal to 113.2 m^3.	3. Analyses will be performed using as-built dimensions of the steamlines to determine the combined steamline volume.	3. The combined steamline volume is greater than or equal to 113.2 m^3.
4. The throat diameter of each MSL flow limiter is less than or equal to 355 mm.	4. Inspections of the as-built MSL flow limiters will be conducted.	4. The throat diameter of each MSL flow limiter is less than or equal to 355 mm.
5. The pneumatic-operated valve in the MSL drain line shown in Figure 2.1.2b opens if either electric power to the valve actuating solenoid is lost, or pneumatic pressure to the valve is lost.	5. Tests will be conducted on the as-built MSL drain valve.	5. The MSL pneumatic drain line valve shown in Figure 2.1.2b opens when either electric power to the valve actuating solenoid is lost, or pneumatic pressure to the valve is lost.
6. MSIV closing time is equal to or greater than 3 seconds and less than or equal to 4.5 seconds when N_2 or air is admitted into the MSIV actuator. The MSIVs are capable of closing within 3 to 4.5 seconds under differential pressure, fluid flow and temperature conditions.	6. a. Tests of the as-built MSIV will be conducted under preoperational differential pressure, fluid flow, and temperature conditions. b. Tests, or type tests, of an MSIV will be conducted under design basis differential pressure, fluid flow and temperature conditions.	6. The MSIV closing time is equal to or greater than 3 and less than or equal to 4.5 seconds.

Table 2.1.2 Nuclear Boiler System (Continued)

Inspections, Tests, Analyses and Acceptance Criteria		
Design Commitment	**Inspections, Tests, Analyses**	**Acceptance Criteria**
7. When all MSIVs are closed, the combined leakage through the MSIVs for all four MSLs is less than or equal to 66.1 liters per minute at standard temperature (20°C) and pressure (one atmosphere absolute pressure) with the differential pressure across the MSIV equal to, or greater than, 0.17 MPa.	7. Test and analysis will be conducted on the as-built MSIVs to determine the leakage.	7. When all MSIVs are closed, the combined leakage through the MSIVs for all four MSLs is less than or equal to 66.1 liters per minute at standard temperature (20°C) and pressure (one atmosphere absolute pressure) with the differential pressure across the MSIV equal to, or greater than, 0.17 MPa.
8. Springs close the MSIV if pneumatic pressure to the MSIV actuator is lost.	8. Tests will be conducted on the as-built MSIV.	8. The MSIV closes when pneumatic pressure is removed from the MSIV actuator.
9.	9.	9.
a. The SRV spring set pressure and flow capacities are given in Section 2.1.2. The opening time for the SRVs from the time the pressure exceeds the valve set pressure to the time the valve is fully open, is less than or equal to 0.3 seconds.	a. Analysis and tests (at a test facility) will be conducted in accordance with the ASME Code.	a. The SRVs have the capacities and set pressures shown on Section 2.1.2. The opening time for the SRVs from the time the pressure exceeds the valve set pressure to the time the valve is fully open is less than or equal to 0.3 seconds.
b. The SRV relief mode opening time from the receipt of signal at the valve actuator to the full ASME lift position is less than or equal to 0.25 seconds when the SRV inlet pressure is at or above 6.89 MPaG.	b. Tests of the SRVs will be conducted at a test facility.	b. The SRV relief mode opening time from the receipt of signal at the valve actuator to the full ASME lift position is less than or equal to 0.25 seconds when the SRV inlet pressure is at or above 6.89 MPaG.

Table 2.1.2 Nuclear Boiler System (Continued)

Inspections, Tests, Analyses and Acceptance Criteria		
Design Commitment	**Inspections, Tests, Analyses**	**Acceptance Criteria**
10. The ADS accumulator can open the SRV with the drywell pressure at design pressure following failure of the pneumatic supply to the accumulator.	10. An analysis and/or type test will be performed to demonstrate the capacity of the SRV ADS accumulators.	10. Either: a. The SRV ADS accumulators have the capacity to lift the stem of the SRVs to the full open position one time with the drywell pressure at, or above the drywell design pressure, or b. The SRV ADS accumulators have the capacity to lift the stem of the SRVs to the full open position five times with the drywell at atmospheric pressure, and an analysis that shows that five SRV lifts at atmospheric pressure demonstrates the capability to open one time with the drywell at the drywell design pressure.
11. For overpressure relief valve operation, reactor vessel pressure sensors generate a high pressure trip signal which is used to initiate opening of the SRVs.	11. Tests will be conducted on the power actuated relief logic using simulated input signal to cause trip conditions.	11. The valve solenoid receives an initiation signal.

Table 2.1.2 Nuclear Boiler System (Continued)

Inspections, Tests, Analyses and Acceptance Criteria		
Design Commitment	**Inspections, Tests, Analyses**	**Acceptance Criteria**
12. The ADS logic is automatically initiated when a low reactor water level signal is present.	12. Tests will be conducted using simulated input signals for each NBS process variable to cause trip conditions in two, three, and four instrument channels of the same process variable associated with each of the two ADS logic divisions.	12. a. Upon receipt of a low water level signal, concurrent with a high drywell pressure signal, at the input to the ADS initiation logic, the following occurs: (1) The main ADS timer initiates and continues to time out in the continued presence of the RPV low water level signal. The time delay for the main ADS timer is less than or equal to 29 seconds. (2) Upon time out of the main ADS timer, a concurrent signal that represents positive indication of at least one RHR or HPCF pump running, an ADS actuation signal is generated to the associated ADS valve solenoids.

Table 2.1.2 Nuclear Boiler System (Continued)

Inspections, Tests, Analyses and Acceptance Criteria		
Design Commitment	**Inspections, Tests, Analyses**	**Acceptance Criteria**
12. (Continued)	12. (Continued)	b. Upon receipt of a low water level signal, in the absence of a high drywell pressure signal, at the input to the ADS initiation logic, the following occurs: (1) The ADS high drywell pressure bypass timer initiates. The time delay for the ADS high drywell pressure bypass timer is less than or equal to 8 minutes. (2) Upon time out of the ADS high drywell pressure bypass timer, concurrent with an RPV low water level signal, the main ADS timer initiates and continues to time out in the continued presence of the RPV low water level signal. (3) Upon time out of the main ADS timer, concurrent with a pump discharge pressure signal that represents positive indication of at least one RHR or HPCF pump running, an ADS actuation signal is generated to the associated ADS valve solenoids.

Table 2.1.2 Nuclear Boiler System (Continued)

Inspections, Tests, Analyses and Acceptance Criteria		
Design Commitment	**Inspections, Tests, Analyses**	**Acceptance Criteria**
13. For ATWS mitigation, the ADS has an automatic and manual inhibit of the automatic ADS initiation.	13. a. The tests defined in item 12a will be conducted with a simulated APRM ATWS permissive signal present. b. The test defined in 12a will be conducted with the ADS manual inhibit device set to inhibit.	13. a. ADS actuation does not occur. b. ADS actuation does not occur.
14. The ADS can be initiated manually.	14. Tests will be conducted by initiating each ADS division manually, concurrent with a simulated RHR or HPCF pump running signal.	14. Upon receipt of a manual initiation signal, an ADS actuation signal is generated to the associated ADS valve solenoids.
15. The RPV water level instrumentation considers the effects of dissolved non-condensable gasses in the RPV water instrument lines.	15. Analyses of the as-built RPV water level instrumentation will be performed using available test data and/or operating experience.	15. An analysis output exists which concludes that the RPV water level instrumentation considers the effects of dissolved non-condensable gasses in the RPV water level instrument lines.
16. The mechanical portion of each division of the safety-related NBS instrumentation located in the Reactor Building is physically separated from the other divisions.	16. Inspections of the as-built NBS instrumentation will be conducted.	16. The mechanical portion of each NBS instrumentation division is physically separated from the other divisions by structural and/or fire barriers.
17. The MSL drain lines from the MSLs to the main condenser are seismically analyzed to withstand the SSE.	17. An inspection of the stress report containing the dynamic analysis of the piping will be conducted.	17. A stress report exists. This report documents that a dynamic seismic analysis has been performed.

Table 2.1.2 Nuclear Boiler System (Continued)

Inspections, Tests, Analyses and Acceptance Criteria		
Design Commitment	**Inspections, Tests, Analyses**	**Acceptance Criteria**
18. The divisional equipment in the NBS is powered from its respective Class 1E divisions as shown in Figures 2.1.2b, 2.1.2d and 2.1.2e. In the NBS, independence is provided between Class 1E divisions, and between Class 1E divisions and non-Class 1E equipment.	18. a. Tests will be performed in the NBS by providing a test signal in only one Class 1E division at a time. b. Inspection of the as-installed Class 1E divisions in the NBS will be performed.	18. a. The test signal exists only in the Class 1E division under test in the NBS. b. Physical separation or electrical isolation exists between Class 1E divisions in the NBS. Physical separation or electrical isolation exists between Class 1E divisions and non-Class 1E equipment.
19. Main control room displays and controls provided for the NBS are as defined in Section 2.1.2.	19. Inspections will be performed on the main control room displays and controls for the NBS.	19. Displays and controls exist or can be retrieved in the main control room as defined in Section 2.1.2.
20. RSS displays and controls provided for the NBS are defined in Section 2.1.2.	20. Inspections will be performed on the RSS displays and controls for the NBS.	20. Displays and controls exist on the RSS as defined in Section 2.1.2.
21. MOVs designated in Section 2.1.2 as having an active safety function will close under differential pressure, fluid flow, and temperature conditions.	21. Tests of installed valves for closing will be conducted under preoperational differential pressure, fluid flow, and temperature conditions.	21. Upon receipt of an actuating signal, each MOV closes.
22. The CVs designated in Section 2.1.2 as having an active safety-related function open, close, or both open and closes, under system pressure, fluid flow, and temperature conditions.	22. Tests of the installed valves for opening, closing, or both opening and closing, will be conducted under system preoperational pressure, fluid flow, and temperature conditions.	22. Based on the direction of the differential pressure across the valve, each CV opens, closes, or both opens and closes, depending upon the valve's safety function.

2.1.3 Reactor Recirculation System

Design Description

The Reactor Recirculation System (RRS) is an arrangement of 10 variable speed reactor internal pumps (RIP) with motors mounted in the bottom of the RPV. The RRS circulates coolant through the reactor core at variable flow rates. The motor cooling heat exchangers are located inside the RPV pedestal adjacent to the RIP motors. Figure 2.1.3 shows the basic system configuration and scope.

Individual RIPs and motors provide at least 6912 m^3/h flow with a total developed head (TDH) of at least 32.6m with 10 RIPs operating and 8291 m^3/h with a TDH of at least 35.8m with 9 RIPs operating, with water at 278°C and 7.25 MPa or less. The individual RIPs, and motors have a dry rotating inertia of not less than 17.5 $kg{\cdot}m^2$ and not more than 26.5 $kg{\cdot}m^2$.

Figure 2.1.3 shows the ASME Code class for the RRS piping and components. The motor cover and its nuts and bolts are classified as safety-related, Seismic Category I, ASME Code Class 1 components. The remainder of the system is classified as non-safety-related.

The RIP motor cooling is provided by an auxiliary impeller mounted on the bottom of the motor rotor, which circulates water through the RIP motor and its cooling heat exchanger. The heat exchangers are cooled by the Reactor Building Cooling Water System (RCW).

Each RIP includes an anti-rotation-device (ARD) which prevents reverse RIP motor rotation by reverse flow-induced torque of equal to or less than 7.55 kN·m when there is no motor power.

RIP maintenance during reactor shutdown requires a temporary plug to be installed in the RIP diffuser when the RIP impeller, shaft and motor are temporarily removed. The temporary RIP diffuser plug cannot be removed unless the RIP motor housing bottom cover is in place.

Inspections, Tests, Analyses and Acceptance Criteria

Table 2.1.3 provides a definition of the inspections, tests, and/or analyses, together with associated acceptance criteria, which will be undertaken for the RRS.

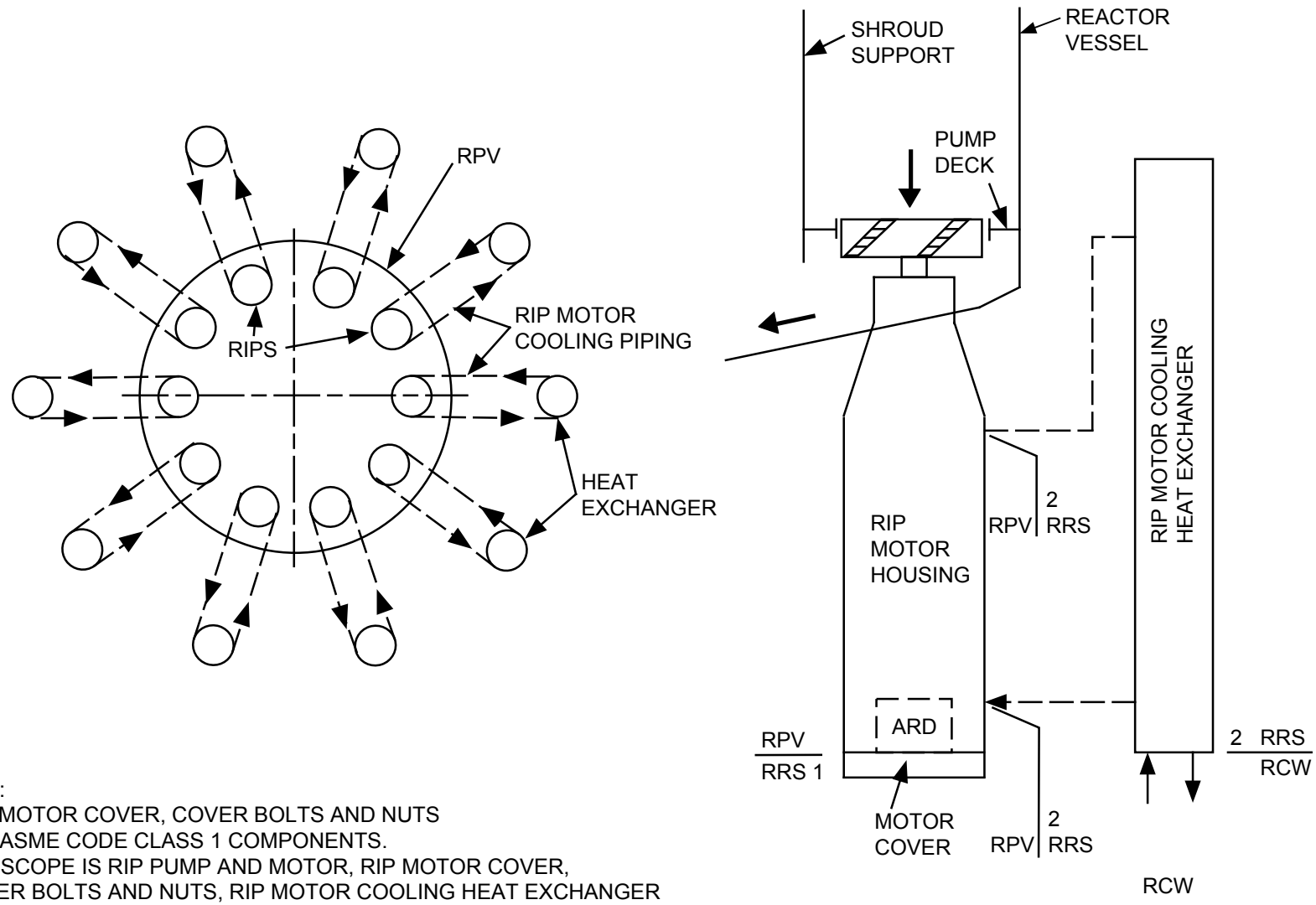

NOTES:
1. THE MOTOR COVER, COVER BOLTS AND NUTS ARE ASME CODE CLASS 1 COMPONENTS.
2. RRS SCOPE IS RIP PUMP AND MOTOR, RIP MOTOR COVER, COVER BOLTS AND NUTS, RIP MOTOR COOLING HEAT EXCHANGER AND PIPING, AND ANTI-ROTATION DEVICE.

Figure 2.1.3 Reactor Recirculation System

Table 2.1.3 Reactor Recirculation System

Inspections, Tests, Analyses and Acceptance Criteria		
Design Commitment	**Inspections, Tests, Analyses**	**Acceptance Criteria**
1. The basic configuration of the RRS is shown on Figure 2.1.3.	1. Inspections of the as-built system will be conducted.	1. The as-built RRS conforms with the basic configuration shown in Figure 2.1.3.
2. The ASME components of the RRS retain their pressure integrity under internal pressures that will be experienced during service.	2. A hydrostatic test will be conducted on those Code components of the RRS required to be hydrostatically tested by the ASME Code.	2. The results of the hydrostatic test of the ASME components of the RRS conform with the requirements in the ASME Code, Section III.
3. Individual RIPs and motors provide at least 6912 m^3/h flow with a total developed head (TDH) of at least 32.6m with water at least 278°C and 7.25 MPa or less, during 10 RIPs operation. During 9 RIPs operation, the individual RIP provides at least 8291 m^3/h with a TDH of at least 35.8m at the same temperature and pressure conditions.	3. Tests will be conducted on the individual RIP in a test facility which includes a calibrated flow element and a RIP section which is geometrically the same as the RPV bottom plenum region including the RIP differential pressure measurement taps. The RIP performance data will be obtained for rated reactor conditions and minimum to rated RIP speed.	3. Individual RIPs and motors provide at least 6912 m^3/h flow with a total developed head (TDH) of at least 32.6m with water at least 278°C and 7.25 MPa or less, during 10 RIPs operation. During 9 RIPs operation, the individual RIP provides at least 8291 m^3/h with a TDH of at least 35.8m at the same temperature and pressure conditions.
4. The individual RIPs and motors have a dry rotating inertia of ≥ 17.5 and ≤ 26.5 kg·m^2.	4. Tests will be conducted on a RIP and motor rotating assembly in a test facility.	4. RIP and motor dry rotating inertia is ≥ 17.5 and ≤ 26.5 kg·m^2.
5. Each RIP includes an ARD which prevents reverse RIP motor rotation by reverse flow induced torque of ≤ 7.55 kN·m when there is no motor power.	5. Tests will be conducted on each ARD in a test facility.	5. Each ARD prevents RIP motor rotation in the reverse direction with a reverse torque of ≤ 7.55kN·m.
6. The temporary RIP diffuser plug cannot be removed unless the RIP motor housing bottom cover is in place.	6. Tests of a RIP diffuser plug will be conducted in a test facility by simulating conditions associated with plug removal with the motor housing bottom cover removed.	6. The temporary RIP diffuser plug cannot be removed unless the RIP motor housing bottom cover is in place.

2.2.1 Rod Control and Information System

Design Description

The Rod Control and Information System (RCIS) controls and monitors positioning of the control rods in the reactor by the fine motion control rod drive (FMCRD) units of the Control Rod Drive (CRD) System. The RCIS controls rod position to accomplish power changes in the reactor core and to achieve compliance with fuel thermal limits, core thermal-hydraulic stability limits and required FMCRD movements following reactor scram and anticipated transients without scram (ATWS) events.

The RCIS consists of redundant microprocessor-based controllers* and the equipment required to monitor and control the FMCRD. The RCIS can operate in either manual, semi-automatic or automatic control mode and has the control interfaces shown on Figure 2.2.1.

The RCIS is classified as non-safety-related.

The RCIS provides the following:

(1) A rod worth minimizer which uses control rod position signals to enforce preestablished sequences for control rod movement when the reactor power (neutron flux) is below the low power setpoint by issuing a control rod block signal when an out of sequence control rod movement is attempted.

(2) An automated thermal limit monitor (ATLM) which uses control rod position signals, neutron flux signals, and fuel operating thermal limits to enforce fuel thermal limits when the reactor power is above the low power setpoint and the plant is in automatic operation.

(3) A selected control rod run-in function which uses a signal from the Recirculation Flow Control (RFC) System to insert selected control rods into the core.

(4) An automatic control rod run-in which uses a scram-follow signal from the Reactor Protection System (RPS) to insert all control rods into the core.

(5) An alternate rod insertion (ARI) function which uses signals from the RFC System to insert all control rods into the core.

* Except for controllers associated with individual FMCRDs.

(6) An automatic control rod withdrawal block in response to:

(a) A signal from the Neutron Monitoring System (NMS) multi-channel rod block monitor (MRBM), at above the low power setpoint (LPSP), or

(b) A signal from the CRD System FMCRD hollow piston/ball nut separation switches (withdrawal block applies only to separated control rod), or

(c) A signal from the RPS Mode Switch, when in Refuel Mode, that only permits the two control rods associated with the same hydraulic control unit (HCU) being withdrawn from the core at any time.

(7) A permissive signal to the Refueling Equipment to prevent hoisting a fuel bundle over the reactor pressure vessel unless all control rods are inserted.

(8) A runback signal to adjustable speed drives (ASD) of RFC System when RCIS initiates signals to insert all control rods.

The RCIS equipment is located in the Reactor Building and Control Building.

The RCIS is powered by two non-Class 1E uninterruptible power supplies.

Inspections, Tests, Analyses and Acceptance Criteria

Table 2.2.1 provides a definition of the inspections, tests, and/or analyses, together with associated acceptance criteria, which will be undertaken for the RCIS.

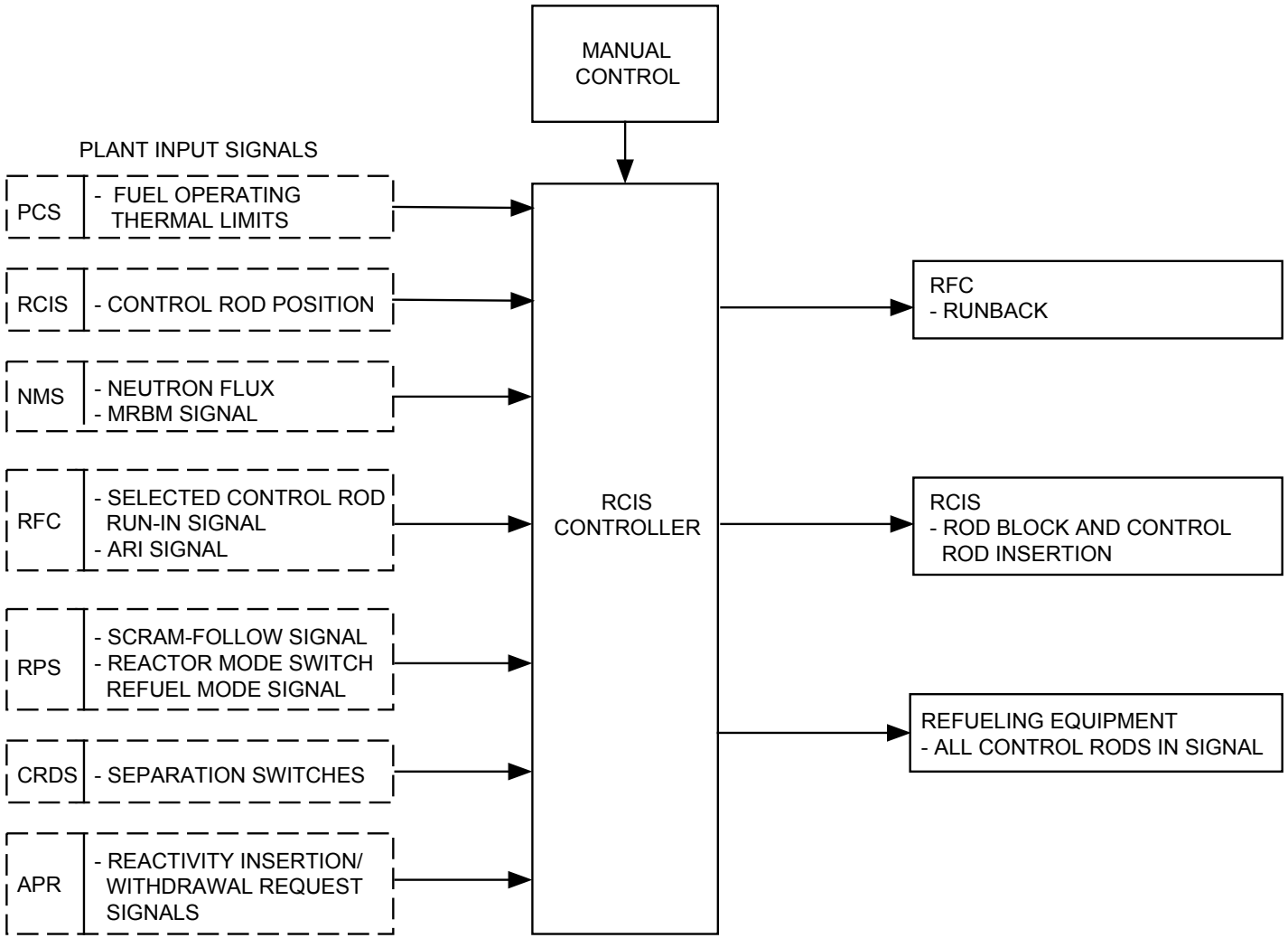

NOTE:
1. INTERCONNECTIONS MAY BE FIBER-OPTIC OR METALLIC.

Figure 2.2.1 Rod Control and Information System Control Interface Diagram

Table 2.2.1 Rod Control and Information System

Inspections, Tests, Analyses and Acceptance Criteria		
Design Commitment	**Inspection, Tests, Analyses**	**Acceptance Criteria**
1. The equipment comprising the RCIS is defined in Section 2.2.1.	1. Inspections of the as-built system will be conducted.	1. The as-built RCIS conforms with the description in Section 2.2.1.
2. The RCIS consists of redundant microprocessor based controllers (except for controllers associated with individual FMCRDs).	2. Tests will be performed by simulating failure of each operating RCIS controller.	2. There is no loss of RCIS output upon loss of any one controller.
3. The RCIS provides a rod worth minimizer which uses control rod position signals to enforce preestablished sequences for control rod movement when the reactor power (neutron flux) is below the low power setpoint by issuing a control rod block signal when an out of sequence control rod movement is attempted.	3. Tests will be conducted on the RCIS using simulated control rod position signals, and simulated neutron flux signals.	3. A control rod block signal occurs when an out-of-sequence control rod movement is simulated and when reactor power is below the low power setpoint.
4. The RCIS provides an ATLM which uses control rod position signals, neutron flux signals, and fuel operating thermal limits to enforce fuel thermal limits when the reactor power is above the low power setpoint and the plant is in automatic operation.	4. Tests will be conducted on the RCIS using simulated control rod position signals, neutron flux signals, and fuel operating thermal limits.	4. A control rod block signal occurs upon simulation of a control rod movement which would cause fuel thermal limits to be approached.
5. The RCIS provides a selected control rod run-in function which uses a signal from the RFC System to insert selected control rods into the core.	5. Tests will be conducted on the RCIS using simulated control rod run-in signal from RFC System.	5. A control rod insertion signal occurs for those positions assigned to this function upon receipt of a simulated signal from the RFC System.
6. The RCIS provides an automatic control rod run-in which uses a scram-follow signal from the RPS to insert all control rods into the core.	6. Tests will be conducted on the RCIS using a simulated scram-follow signal from the RPS.	6. A control rod run-in signal occurs upon receipt of a simulated scram-follow signal.

Table 2.2.1 Rod Control and Information System (Continued)

Inspections, Tests, Analyses and Acceptance Criteria		
Design Commitment	**Inspection, Tests, Analyses**	**Acceptance Criteria**
7. The RCIS provides an ARI function which uses signals from the RFC System to insert all control rods into the core.	7. Tests will be conducted on the RCIS using simulated ARI signals from the RFC System.	7. A control rod insertion signal occurs upon receipt of a simulated ARI signal.
8. The RCIS provides an automatic control rod withdrawal block in response to: a. A signal from the NMS MRBM at above the low power setpoint. b. A signal from the CRD System FMCRD hollow piston/ball nut separation switches (withdrawal block applies only to separated control rod). c. A signal from the RPS Mode Switch when in Refuel Mode that only permits the two control rods associated with the same HCU being withdrawn from the core at anytime.	8. Tests will be conducted on the RCIS using simulated signals from the NMS MRBM at above low power setpoint; and from the FMCRD separation switches; and from control rods of the same HCU and Refuel Mode position of RPS Mode Switch.	8. A control rod withdrawal block signal occurs upon receipt of simulated signals from: a. NMS MRBM at above the low power setpoint, b. FMCRD separation switches (withdrawal block is only applicable to separated control rod), c. An attempt to withdraw a control rod, when the RPS mode switch is in Refuel Mode and the two control rods associated with the same HCU are withdrawn.
9. The RCIS provides a permissive signal to the Refueling Equipment to prevent hoisting a fuel bundle over the reactor pressure vessel unless all control rods are inserted.	9. Tests will be conducted on the RCIS using simulated rod position information.	9. A permissive signal to the Refueling Equipment occurs only when the simulated signals indicate that all control rods are inserted. No signal occurs when any rod is signalled as not inserted.
10. The RCIS provides a runback signal to RFC System ASDs when RCIS initiates signals to insert all control rods.	10. Tests will be conducted on the RCIS using simulated control rods insertion signals.	10. RFC System ASD runback signals occur upon receipt of simulated signals to insert all control rods.
11. The RCIS is powered by two non-Class 1E uninterruptible supplies.	11. Tests will be performed on the as-built RCIS by providing a test signal in only one non-Class 1E uninterruptible power supply at a time.	11. The test signal exists in only one control channel at a time.

2.2.2 Control Rod Drive System

Design Description

The Control Rod Drive (CRD) System controls changes in core reactivity during power operation by movement and positioning of the neutron absorbing control rods within the core in fine increments in response to control signals from the Rod Control and Information System (RCIS). The CRD System provides rapid control rod insertion (scram) in response to manual or automatic signals from the Reactor Protection System (RPS). Figure 2.2.2 shows the basic system configuration and scope.

The CRD System consists of three major elements: (1) the electro-hydraulic fine motion control rod drive (FMCRD) mechanisms, (2) the hydraulic control unit (HCU) assemblies, and (3) the control rod drive hydraulic system (CRDHS). The FMCRDs provide electric-motor-driven positioning for normal insertion and withdrawal of the control rods and hydraulic-powered rapid control rod insertion (scram) for abnormal operating conditions. Simultaneous with scram, the FMCRDs also provide electric-motor driven run-in of control rods as a path to rod insertion that is diverse from the hydraulic-powered scram. The hydraulic power required for scram is provided by high pressure water stored in the individual HCUs. An HCU can scram two FMCRDs. It also provides the flow path for purge water to the associated drives during normal operation. The CRDHS supplies pressurized water for charging the HCU scram accumulators and purging to the FMCRDs.

There are 205 FMCRDs mounted in housings welded into the reactor vessel bottom head. The FMCRD has a movable hollow piston tube that is coupled at its upper end, inside the reactor vessel, to the bottom of a control rod. The FMCRD can move the control rod up or down over its entire range, by a ball nut and ball screw driven at a speed of 30 mm/s ±10% by the electric stepper motor. In response to a scram signal, the piston inserts the control rod into the core hydraulically using stored energy in the HCU scram accumulator. The scram water is introduced into the drive through a scram inlet connection on the FMCRD housing, and is then discharged directly into the reactor vessel via clearances between FMCRD parts. The average scram times of all FMCRDs with the reactor pressure as measured at the vessel bottom below 7.48 MPaG are:

Percent Insertion	Time (s)
10	≤ 0.42
40	≤ 1.00

Percent Insertion	Time (s)
60	≤ 1.44
100	≤ 2.80

These times are measured starting from loss of signal to the scram solenoid pilot valves in the HCUs.

The FMCRD has an electro-mechanical brake with a minimum holding torque of 49 N·m on the motor drive shaft and a ball check valve at the point of connection with the scram inlet line.

Two redundant and separate switches in the FMCRD detect separation of the hollow piston from the ball nut.

There are 103 HCUs, each of which provides water stored in a pre-charged accumulator for scramming two FMCRDs. Figure 2.2.2 shows the major HCU components. The accumulator is connected to its associated FMCRDs by a hydraulic line that includes a scram valve held closed by pressurized control air. To cause a scram, the RPS provides a signal to de-energize the scram solenoid pilot valve (SSPV) that vents the control air from the scram valve, which then opens by spring action. Loss of either electrical power to the SSPV or loss of control air pressure causes scram. A pressure switch detects low accumulator gas pressure and actuates an alarm in the main control room.

The CRD System also provides alternate rod insertion (ARI) as a means of actuating hydraulic scram when an anticipated transient without scram (ATWS) condition exists. Following receipt of an ARI signal, solenoid valves on the scram air header open to reduce pressure in the header, allowing the HCU scram valves to open. The control rod drives then insert the control rods hydraulically.

The CRDHS has pumps, valves, filters, instrumentation, and piping to supply pressurized water for charging the HCUs and purging the FMCRDs.

The CRD System components classified as safety-related are: the HCU components required for scram; the FMCRD components required for scram; the scram inlet piping; the FMCRD reactor coolant primary pressure boundary components; the FMCRD brake and ball check valve; the internal drive housing support; the FMCRD separation switches; and the HCU charging water header pressure instrumentation.

The CRD System components classified as Seismic Category I are: the HCU components required for scram; the FMCRD components required for scram; the scram inlet piping; the FMCRD reactor coolant primary pressure boundary components; the FMCRD brake

and ball check valve; the internal drive housing support; the FMCRD separation switches; and the HCU charging water header pressure instrumentation.

Figure 2.2.2 shows the ASME Code class for the CRD System piping and components.

The CRD System is located in the Reactor Building. The FMCRDs are mounted to the reactor vessel bottom head inside primary containment. The HCUs and CRDHS equipment are located in the Reactor Building at the basemat elevation.

Each of the four divisional HCU charging header pressure sensors are powered from their respective divisional Class 1E power supply. Independence is provided between the Class 1E divisions for these sensors and also between the Class 1E divisions and non-Class 1E equipment.

For the FMCRD separation switches, independence is provided between the Class 1E divisions and also between the Class 1E divisions and non-Class 1E equipment.

For their preferred source of power, the FMCRDs are collectively powered from one Class 1E division; for their alternate source of power, they are collectively powered from one non-Class 1E Plant Investment Protection (PIP) bus.

The hydraulic portion of the CRD System which performs the scram function is physically separated from and independent of the Standby Liquid Control System.

The CRD System has the following alarms, displays, and controls in the main control room:

(1) Alarms for separation of the hollow piston from the ball-nut and low HCU accumulator gas pressure.

(2) Parameter displays for the instruments shown in Figure 2.2.2.

(3) Controls and status indication for the CRD pumps and flow control valves shown on Figure 2.2.2.

(4) Status indication for the scram valve position.

The following CRD System safety-related electrical equipment are located in either the Reactor Building or primary containment and are qualified for a harsh environment: the HCU charging header pressure instrumentation, the scram solenoid pilot valves, and FMCRD separation switches.

The check valves (CVs) shown inside the HCU boundary on Figure 2.2.2 and the FMCRD ball check valves have active safety-related functions to close under system pressure, fluid flow, and temperature conditions.

The piping and components of the CRD pump suction supply, which extends from the CRD System interfaces with the Condensate Feedwater and Air Extraction (CFCAE) System and Makeup Water (Condensate) (MUWC) System to the inlet connections of the CRD pumps, are designed for 2.82 MPaG for intersystem loss-of-coolant accident (ISLOCA) conditions.

Inspections, Tests, Analyses and Acceptance Criteria

Table 2.2.2 provides a definition of the inspections, tests, and/or analyses, together with associated acceptance criteria, which will be undertaken for the CRD System.

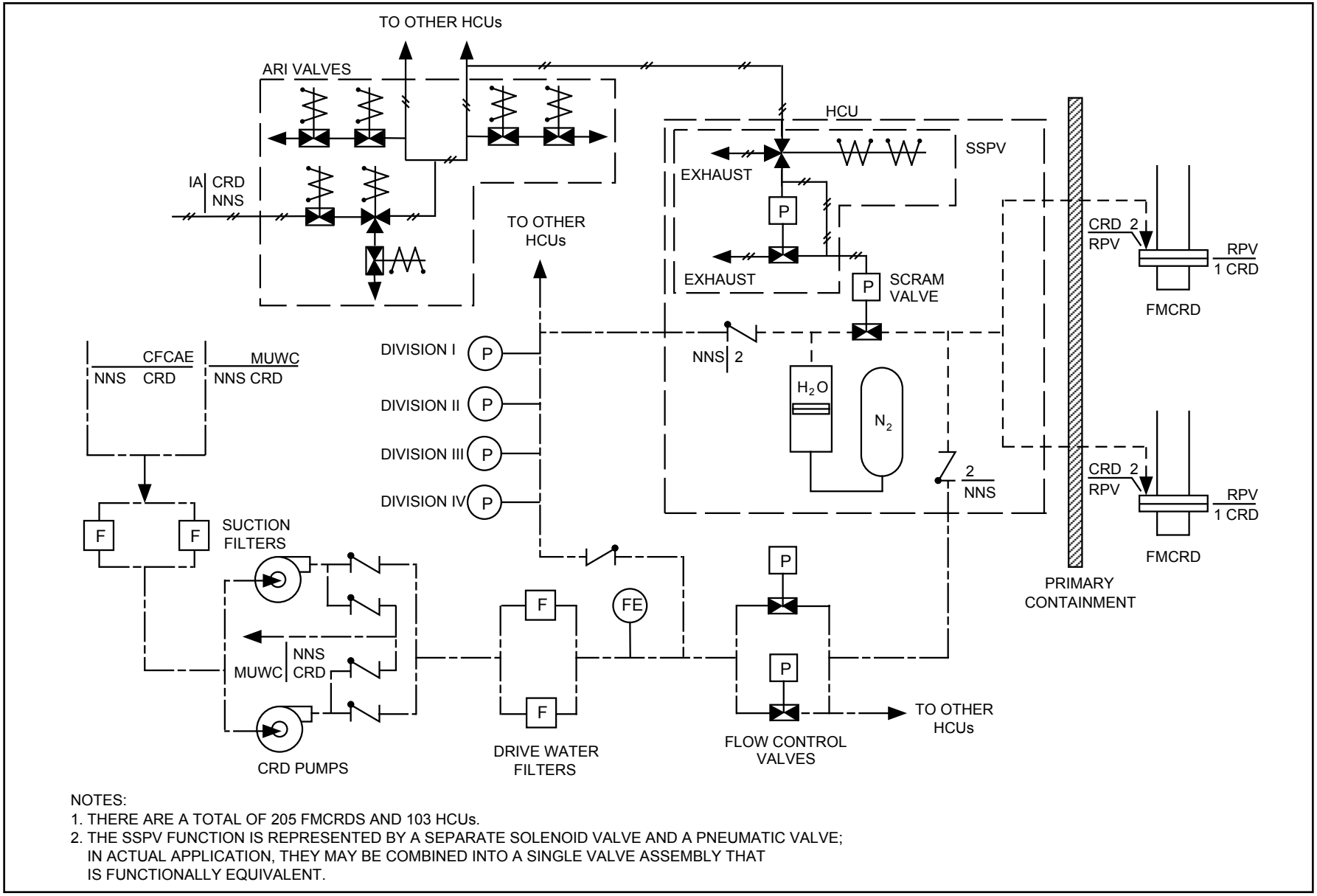

NOTES:
1. THERE ARE A TOTAL OF 205 FMCRDS AND 103 HCUs.
2. THE SSPV FUNCTION IS REPRESENTED BY A SEPARATE SOLENOID VALVE AND A PNEUMATIC VALVE; IN ACTUAL APPLICATION, THEY MAY BE COMBINED INTO A SINGLE VALVE ASSEMBLY THAT IS FUNCTIONALLY EQUIVALENT.

Figure 2.2.2 Control Rod Drive System

Table 2.2.2 Control Rod Drive System

Inspections, Tests, Analyses and Acceptance Criteria		
Design Commitment	**Inspections, Tests, Analyses**	**Acceptance Criteria**
1. The basic configuration of the CRD System is as shown on Figure 2.2.2.	1. Inspections of the as-built system will be conducted.	1. The as-built CRD System conforms with the basic configuration shown on Figure 2.2.2.
2. The ASME Code components of the CRD System retain their pressure boundary integrity under internal pressures that will be experienced during service.	2. A hydrostatic test will be conducted on those code components of the CRD System required to be hydrostatically tested by the ASME Code.	2. The results of the hydrostatic test of the ASME Code components of the CRD System conform with the requirements in the ASME Code, Section III.
3. The FMCRD can move the control rod up or down over its entire range by a ball nut and ball screw driven at a speed of 30 mm/s ±10% by the electric stepper motor.	3. Tests will be conducted on each installed FMCRD.	3. Each control rod moves up and down over its entire range at a speed of 30 mm/s ±10%. The time to insert each control rod from full-out to full-in is ≤ 135 seconds when driven by the electric stepper motor.
4. The average scram times of all FMCRDs with the reactor pressure as measured at the vessel bottom below 7.48 MPaG are: Percent Insertion / Time (s) 10 / ≤ 0.42 40 / ≤ 1.00 60 / ≤ 1.44 100 / ≤ 2.80 These times are measured starting from loss of signal to the scram solenoid pilot valves in the HCU.	4. Tests will be conducted on each installed HCU and its associated FMCRD. The results of the tests performed at low reactor pressure will be extrapolated to the Design Commitment pressure (7.48 MPaG).	4. The average scram times of all FMCRDs with the reactor pressure as measured at the vessel bottom below 7.48 MPaG are: Percent Insertion / Time (s) 10 / ≤ 0.42 40 / ≤ 1.00 60 / ≤ 1.44 100 / ≤ 2.80 These times are measured starting from loss of signal to the scram solenoid pilot valves in the HCU
5. The FMCRD has an electro-mechanical brake with a minimum holding torque of 49 N·m on the motor drive shaft.	5. Tests of each FMCRD brake will be conducted in a test facility.	5. The FMCRD electro-mechanical brake has a minimum holding torque of 49 N·m on the motor drive shaft.

Table 2.2.2 Control Rod Drive System (Continued)

Inspections, Tests, Analyses and Acceptance Criteria		
Design Commitment	**Inspections, Tests, Analyses**	**Acceptance Criteria**
6. Two redundant and separate switches in the FMCRD detect separation of the hollow piston from the ball nut.	6. Tests of each as-built FMCRD will be conducted.	6. Both switches in each FMCRD detect separation of the hollow piston from the ball nut.
7. Following receipt of an ARI signal, solenoid valves on the scram air header open to reduce pressure in the header, allowing the HCU scram valves to open.	7. Tests will be conducted on the as-built ARI valves using a simulated actuation signal.	7. Following receipt of a simulated ARI signal, solenoid valves on the scram air header open to reduce pressure in the header, allowing the HCU scram valves to open.
8. Each of the four divisional HCU charging header pressure sensors are powered from their respective divisional Class 1E power supply. For the four HCU charging water header pressure sensors, independence is provided between Class 1E divisions, and between Class 1E divisions and non-Class 1E equipment.	8. a. Tests will be conducted on the as-built charging water header sensors by providing a test signal in only one Class 1E division at a time. b. Inspections of the as-installed charging water header sensor Class 1E divisions will be conducted.	8. a. The test signal exists only in the Class 1E Division under test. b. Physical separation or electrical isolation exists between Class 1E divisions. Physical separation or electrical isolation exists between these Class 1E divisions and non-Class 1E equipment.
9. For the FMCRD separation switches, independence is provided between the Class 1E divisions and also between the Class 1E divisions and non-Class 1E equipment.	9. Inspections of the as-installed Class 1E divisions in the CRD System will be performed.	9. In the CRD System, physical separation or electrical isolation exists between Class 1E divisions. Physical separation or electrical isolation exists between Class 1E divisions and non-Class 1E equipment.
10. For their preferred source of power, the FMCRDs are collectively powered from one Class 1E division; for their alternate source of power, they are collectively powered from one non-Class 1E PIP bus.	10. Inspections of the as-built CRD System will be conducted.	10. For their preferred source of power, the FMCRD motors are collectively powered from one Class 1E division; for their alternate source of power, they are collectively powered from one non-Class 1E PIP bus.

Table 2.2.2 Control Rod Drive System (Continued)

Inspections, Tests, Analyses and Acceptance Criteria		
Design Commitment	**Inspections, Tests, Analyses**	**Acceptance Criteria**
11. Main control room alarms, displays and controls provided for the CRD System are defined in Section 2.2.2.	11. Inspections will be performed on the main control room alarms, displays and controls for the CRD System.	11. Alarms, displays and controls exist or can be retrieved in the main control room as defined in Section 2.2.2.
12. CVs designated in Section 2.2.2 as having an active safety-related function close under system pressure, fluid flow, and temperature conditions.	12. Tests of installed valves for closing will be conducted under system preoperational pressure, fluid flow, and temperature conditions.	12. Each CV closes.

2.2.3 Feedwater Control System

Design Description

The Feedwater Control (FDWC) System controls the flow of feedwater into the reactor pressure vessel (RPV) to maintain the water level in the vessel during plant operation. The FDWC System consists of redundant, microprocessor-based controllers, and flow sensors for main steamlines and feedwater lines, as shown in the control interface diagram in Figure 2.2.3.

The FDWC digital controllers determine narrow range level signal using three reactor level measurement inputs from the NBS. Sensor signals are transmitted to the FDWC digital controllers by the Non-Essential Multiplexing System (NEMS).

The steam flow in each of four main steamlines is sensed at the RPV nozzle venturis. Sensor signals are transmitted to the FDWC System digital controllers by the NEMS. These measurements are processed in the digital controllers to calculate the total steam flow out of the vessel.

Feedwater flow is sensed at a flow element in each of the two feedwater lines. Sensor signals are transmitted to the FDWC digital controllers by the NEMS. These measurements are processed in the digital controllers to calculate the total feedwater flow into the vessel.

The FDWC System is classified as non-safety-related.

The FDWC System operates in either manual, automatic single-element or automatic three-element control modes. At low feedwater flow, the FDWC System utilizes only water level measurement in automatic single-element control mode. At higher flow rates, the FDWC System in three-element control mode uses water level, steam flow, and feedwater flow measurements for water level control.

The FDWC System monitors reactor water level signals and, if a high RPV water level setpoint is reached, sends trip signals to the Turbine Control System and to the Condensate, Feedwater and Condensate Air Extraction (CFCAE) System. If a low RPV water level setpoint is reached, the FDWC System sends trip signals to the Recirculation Flow Control (RFC) System.

If the FDWC System receives an anticipated transient without scram (ATWS) trip signal from the Safety System Logic and Control (SSLC), the FDWC System issues signals to runback feedwater flow.

Each channel of the FDWC System is powered by separate non-Class 1E uninterruptible power supplies.

The total feedwater flow is displayed on the main control panel. The FDWC System operating mode is selectable from the main control room. The FDWC System microprocessors are located in the Control Building.

Digital controllers used for the FDWC System are redundant, with diagnostic capabilities that identify and isolate failure of level input signals.

Inspections, Tests, Analyses and Acceptance Criteria

Table 2.2.3 provides a definition of the inspections, tests, and/or analyses, together with associated acceptance criteria, which will be undertaken for the Feedwater Control System.

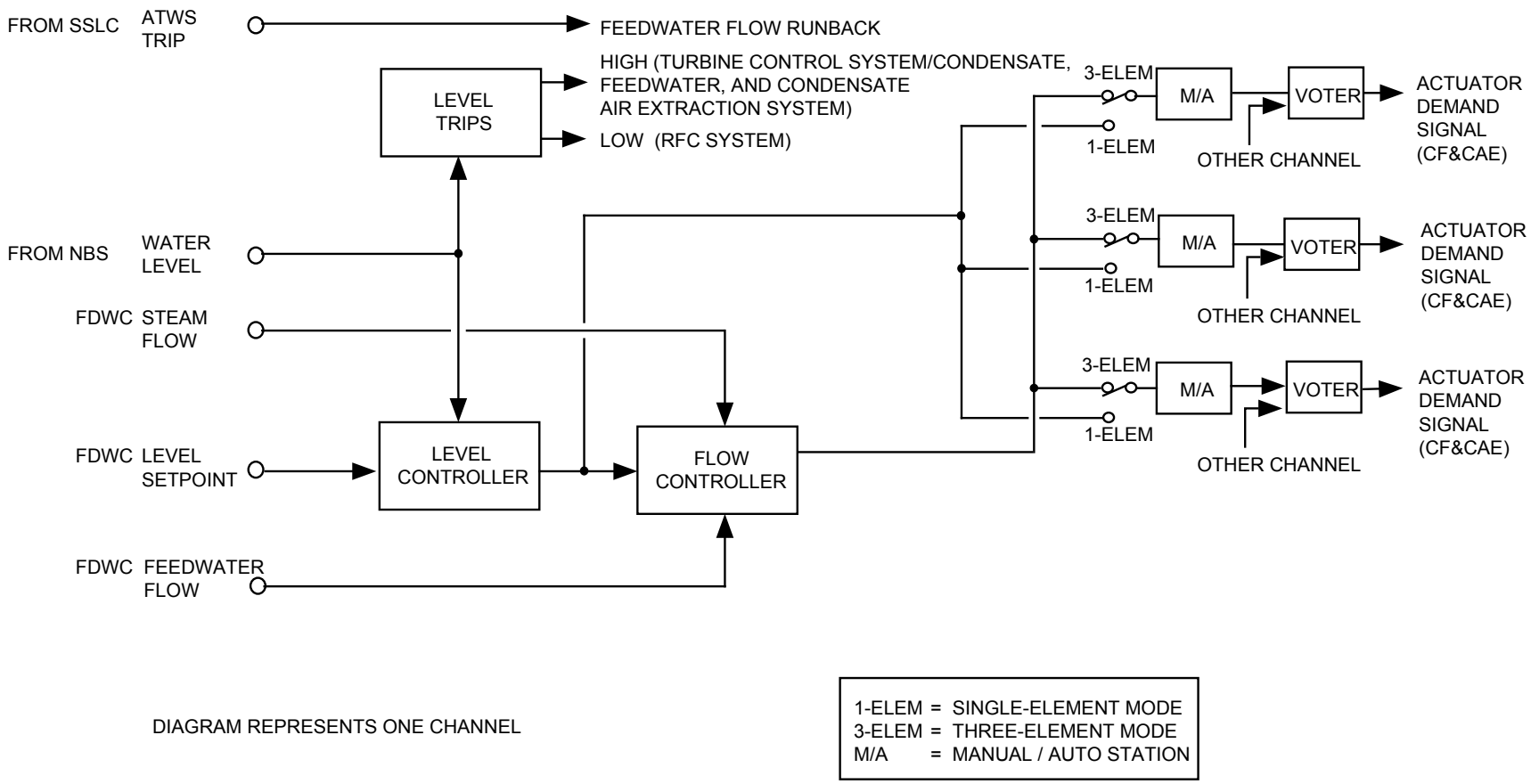

DIAGRAM REPRESENTS ONE CHANNEL

1-ELEM = SINGLE-ELEMENT MODE
3-ELEM = THREE-ELEMENT MODE
M/A = MANUAL / AUTO STATION

NOTE:
1. INTERCONNECTIONS MAY BE FIBER-OPTIC OR METALLIC.

Figure 2.2.3 Feedwater Control System Control Interface Diagram

Table 2.2.3 Feedwater Control System

Inspections, Tests, Analyses and Acceptance Criteria		
Design Commitment	**Inspections, Tests, Analyses**	**Acceptance Criteria**
1. The equipment comprising the FDWC System is defined in Section 2.2.3.	1. Inspections of the as-built system will be conducted.	1. The as-built FDWC System conforms with the description in Section 2.2.3.
2. The FDWC System controls the flow of feedwater into the RPV.	2. A test will be performed by simulating a decreasing reactor level signal.	2. A signal to increase feedwater flow occurs.
3. The FDWC System monitors reactor water level signals and, if a high RPV water level setpoint is reached, sends trip signals to the Turbine Control System and to the CFCAE System. If a low RPV water level setpoint is reached, the FDWC System sends trip signals to the RFC System.	3. Tests will be performed on the FDWC System, using simulated RPV water level signals.	3. When a high RPV water level setpoint is reached, trip signals are sent to the Turbine Control System and CFCAE System. When a low RPV water level setpoint is reached, a trip signal is sent to the RFC System.
4. If the FDWC System receives an ATWS trip signal from the SSLC, FDWC issues signals to runback feedwater flow.	4. Tests will be performed on the FDWC System, using a simulated ATWS trip signal.	4. When an ATWS trip signal is received, the FDWC System issues feedwater runback signals.
5. The FDWC System digital controllers are powered by separate non-Class 1E uninterruptible power supplies.	5. Tests will be performed by providing a test signal in only one non-Class 1E uninterruptible power supply at a time.	5. The test signal exists in only one digital control channel at a time.
6. Main control room controls and displays provided for the FDWC System are defined in Section 2.2.3.	6. Inspections will be performed on the main control room controls and displays for the FDWC System.	6. Controls and displays exist or can be retrieved in the main control room as defined in Section 2.2.3.
7. Digital controllers used for the FDWC System are redundant.	7. Tests will be performed by simulating failure of each operating FDWC System digital controller.	7. There is no loss of FDWC System output upon loss of any one digital controller.
8. Digital controllers used for the FDWC System have diagnostic capabilities that identify and isolate failure of level input signals.	8. Tests will be performed by simulating level input signal failures to the FDWC System digital controllers.	8. There is no loss of FDWC System output upon loss of any one level input signal.

2.2.4 Standby Liquid Control System

The Standby Liquid Control (SLC) System injects neutron absorbing poison into the reactor using a boron solution, thus providing the safety-related function of backup reactor shutdown capability independent of the normal reactivity control system based on insertion of control rods into the core. The SLC System is designed to bring the reactor from full power to a subcritical condition without control rod movement, at any time in a core cycle, and at design basis conditions with the reactor in the most reactive xenon-free state. The SLC System operates over a range of reactor pressure conditions which bound the elevated pressures associated with an anticipated transient without scram (ATWS). Figure 2.2.4 shows the basic system configuration and scope.

The SLC System consists of a boron solution storage tank, two positive displacement pumps, two motor-operated injection valves which are provided in parallel for redundancy, and associated piping and valves used to transfer borated water from the storage tank to the reactor pressure vessel (RPV). The borated solution is discharged through the high pressure core flooder (HPCF) Division B subsystem sparger.

The SLC System uses a dissolved solution of sodium pentaborate as the neutron-absorbing poison. This solution is held in the storage tank which has a heater to maintain solution temperature above the saturation temperature. The heater has automatic actuation and automatic shutoff.

A test tank and associated piping and valves permit testing of the SLC System during plant operation. The tank is supplied with demineralized water, which is pumped in either a closed loop or is injected into the reactor.

Key SLC System equipment performance requirements are:

(1)	Pump flow (minimum)	378 L/min with both pumps operating 189 L/min with one pump operating
(2)	Maximum reactor pressure (for injection)	8.72 MPaA
(3)	Pumpable volume in storage tank (minimum)	23.1 m^3

The SLC System can be manually initiated from the main control room. Each of the two divisions is controlled by a separate switch. When it is manually initiated to inject a liquid neutron absorber into the reactor, the following devices and actions are initiated by each divisional switch:

(1) The specified division injection valve is opened.

(2) The specified division storage tank discharge valve is opened.

(3) The specified division injection pump is started.

(4) The reactor water cleanup isolation valves are closed.

Both divisions of the SLC System are automatically initiated during an ATWS condition by safety system and logic control (SSLC) logic. With the storage tank at minimum level and both pumps operating, the system is designed to inject the minimum required boron solution.

Each SLC System pump has an interlock which prevents operation if both the test tank outlet valve and the pump suction valve are closed.

The SLC System provides borated water to the reactor core to compensate for the various reactivity effects. These effects are xenon decay, elimination of steam voids, changing water density due to the reduction in water temperature, Doppler effect in uranium, changes in neutron leakage, and changes in control rod worth. To meet this objective, it is necessary to inject a quantity of boron which produces a minimum concentration of 850 parts per million (ppm) by weight of natural boron in the reactor core at 20°C. To allow for potential leakage and imperfect mixing in the reactor system, an additional approximately 25% (220 ppm) is added to the above requirement, resulting in a total requirement of greater than or equal to 1070 ppm. The required concentration is thus achieved in a mass of water equal to the sum of the mass of water in the RPV at normal water level (equal to or less than 455 x 10^3 kg) plus the mass of water in the RPV shutdown cooling piping (equal to or less than 130 x 10^3 kg). The quantity of boron solution contained in the storage tank above the pump suction shutoff level provides the required concentration of 1070 ppm when injected into the reactor.

The SLC System pumps have sufficient net positive suction head (NPSH) available at the pump. The SLC System pumps are designed to produce discharge pressure to inject the solution into the reactor when the reactor is at pressure conditions corresponding to the system relief valve (10.79 MPaG), which is above peak ATWS pressure in the RPV.

SLC System components required for RPV injection are classified as Seismic Category I.

Figure 2.2.4 shows the ASME Code class for the SLC System piping and components.

The SLC System is located in the Reactor Building. The storage tank, test water tank, the two positive displacement pumps, and associated valving are located in the secondary containment on the floor elevation below the operating floor.

Each of the two SLC System divisions is powered from the respective Class 1E division as shown on Figure 2.2.4. The power supplied to one motor-operated injection valve,

suction valve, and injection pump is powered from Division I. The power supply to the other motor-operated injection valve, suction valve, and injection pump is powered from Division II. In the SLC system, independence is provided between Class 1E divisions, and also between Class 1E divisions and non-Class 1E equipment.

The SLC System has the following displays, controls and alarms in the main control room:

- Alarms for storage tank temperature and level.
- Parameter displays for the instruments shown on Figure 2.2.4.
- Controls and status indication for the pumps, injection valves, and suction valves.
- A manual system initiation switch for each division.

The motor-operated valves (MOVs) shown on Figure 2.2.4 have an active safety-related function and perform this function under differential pressure, fluid flow and temperature conditions.

The check valves (CVs) shown on Figure 2.2.4 have active safety-related functions to open, close, or both open and close under system pressure, fluid flow, and temperature conditions.

The SLC System is physically separated from and independent of the hydraulic portion of the Control Rod Drive (CRD) System.

The piping and components on the suction side of the pumps up to and including the suction valves and the test loop up to the test tank inlet valve have a design pressure of 2.82 MPaG for intersystem LOCA (ISLOCA) conditions.

Inspections, Tests, Analyses and Acceptance Criteria

Table 2.2.4 provides a definition of the inspections, tests, and/or analyses, together with associated acceptance criteria, which will be undertaken for the SLC System.

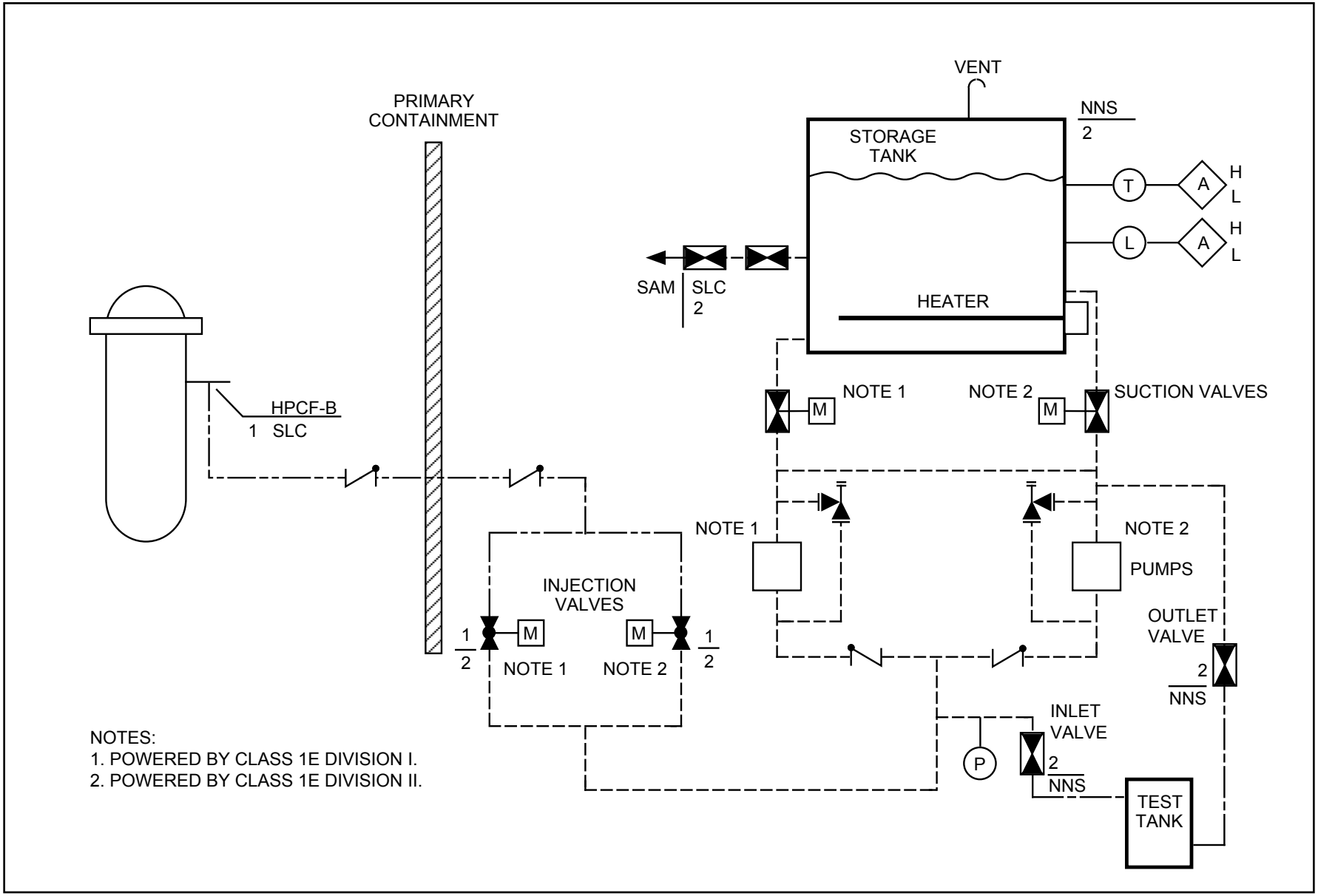

Figure 2.2.4 Standby Liquid Control System

Table 2.2.4 Standby Liquid Control System

Inspections, Tests, Analyses and Acceptance Criteria		
Design Commitment	**Inspections, Tests, Analyses**	**Acceptance Criteria**
1. The basic configuration of the SLC System is shown in Figure 2.2.4.	1. Inspections of the as-built system will be conducted.	1. The as-built SLC System conforms with the basic configuration shown in Figure 2.2.4.
2. The ASME Code components of the SLC System retain their pressure boundary integrity under internal pressures that will be experienced during service.	2. A hydrostatic test will be conducted on those Code components of the SLC System that are required to be hydrostatically tested by the ASME Code.	2. The results of the hydrostatic test of the ASME Code components of the SLC System conform with the requirements in the ASME Code, Section III.
3.	3.	3.
a. A test tank and associated piping and valves permit testing of the SLC System during plant operation. The tank is supplied with demineralized water, which is pumped in either a closed loop or is injected into the reactor.	a. Tests will be conducted on each division of the as-built SLC System using installed controls, power supplies and other auxiliaries. The following tests will be conducted:	a.
	(1) Demineralized water will be pumped against a pressure greater than or equal to 8.72 MPaA in a closed loop on the test tank.	(1) Demineralized water is pumped with a flow rate greater than or equal to 189 L/min in the closed loop.
	(2) Demineralized water will be injected from the test tank into the reactor.	(2) Demineralized water is injected from the test tank into the reactor.
b. The SLC System delivers at least 378 L/min of solution with both pumps operating when the reactor pressure is less than or equal to 8.72 MPaA.	b. Tests will be conducted on the as-built SLC System using installed controls, power supplies and other auxiliaries. Demineralized water will be injected from the storage tank into the reactor with both pumps running against a discharge pressure of greater than or equal to 8.72 MPaA.	b. The SLC System injects greater than or equal to 378 L/min into the reactor with both pumps running against a discharge pressure of greater than or equal to 8.72 MPaA.

Table 2.2.4 Standby Liquid Control System (Continued)

Inspections, Tests, Analyses and Acceptance Criteria		
Design Commitment	**Inspections, Tests, Analyses**	**Acceptance Criteria**
c. The SLC System delivers at least 189 L/min of solution with either pump operating when the reactor pressure is less than or equal to 8.72 MPaA.	c. Tests will be conducted on the as-built SLC System using installed controls, power supplies and other auxiliaries. Demineralized water will be injected from the storage tank into the reactor with one pump running against a discharge pressure of greater than or equal to 8.72 MPaA.	c. The SLC System injects greater than or equal to 189 L/min into the reactor with either pump running against a discharge pressure greater than or equal to 8.72 MPaA.
d. The SLC System can be manually initiated from the main control room.	d. Tests will be conducted on the as-built SLC System using the manual initiation switch.	d. Each division of the SLC System initiates when the manual initiation switch for that division is actuated.
e. Both divisions of the SLC System are automatically initiated during an ATWS.	e. Tests will be conducted on the as-built SLC System using simulated ATWS signals.	e. Upon receipt of a simulated ATWS signal, both divisions of SLC automatically initiate.
f. Each SLC System pump has an interlock which prevents operation if both the test tank outlet valve and the pump suction valve are closed.	f. Tests will be conducted on each SLC System pump start logic using simulated valve position signals	f. Each SLC System pump is prevented from operating unless signals indicative of one of the following conditions exist: (1) A suction path from the storage tank is available (the pump suction valve is fully open). (2) A suction path from the test tank is available (the test tank outlet valve is fully open).

Table 2.2.4 Standby Liquid Control System (Continued)

Inspections, Tests, Analyses and Acceptance Criteria		
Design Commitment	**Inspections, Tests, Analyses**	**Acceptance Criteria**
g. The performance of the SLC System is based on the following plant parameters:	g. The as-built dimensions will be used in a volumetric analysis to calculate the volumes listed below:	g.
(1) Storage tank pumpable volume is greater than or equal to 23.1 m^3.	(1) Minimum Storage tank pumpable volume.	(1) Storage tank pumpable volume is greater than or equal to 23.1 m^3.
(2) RPV water inventory is less than or equal to 455 x 10^3 kg at normal water level and 20°C.	(2) RPV water inventory at normal water level and 20°C.	(2) RPV water inventory is less than or equal to 455 x 10^3 kg at 20°C.
(3) RHR shutdown cooling system inventory is less than or equal to 130 x 10^3 kg at 20°C.	(3) RHR shutdown cooling system water inventory at 20°C.	(3) RHR shutdown cooling system inventory is less than or equal to 130 x 10^3 kg at 20°C.
h. The SLC pumps have sufficient NPSH.	h. Tests will be conducted on the as-built SLC System by injecting demineralized water using both SLC System pumps from the storage tank to the RPV with the storage tank at the low level (pump trip level) and a temperature of greater than or equal to 43°C.	h. The available NPSH exceeds the NPSH required as demonstrated by the SLC System injecting greater than or equal to 378 liters/minute.
i. The SLC System pump relief valves open when the inlet pressure to the valve equals or exceeds the setpoint (10.76 MPaG).	i. Shop or field tests will be conducted using the SLC System pump to determine the relief valve setpoint.	i. The SLC System pump relief valves open when the inlet pressure to the valve equals or exceeds 10.76 MPaG.

Table 2.2.4 Standby Liquid Control System (Continued)

Inspections, Tests, Analyses and Acceptance Criteria		
Design Commitment	**Inspections, Tests, Analyses**	**Acceptance Criteria**
4. In the SLC System, independence is provided between Class 1E divisions, and also between Class 1E divisions and non-Class 1E equipment.	4. a. Tests will be conducted on the SLC System by providing a test signal in only one Class 1E Division at a time. b. Inspection of the as-built SLC System will be performed.	4. a. The test signal exists only in the Class 1E Division under test in the SLC System. b. In the SLC System, physical separation or electrical isolation exists between Class 1E divisions. Physical separation or electrical isolation exists between these Class 1E divisions and non-Class 1E equipment.
5. Main control room alarms, displays, and controls provided for the SLC System are defined in Section 2.2.4.	5. Inspections will be performed on the main control room alarms, displays, and controls for the SLC System.	5. Alarms, displays, and controls exist or can be retrieved in the main control room as defined in Section 2.2.4.
6. MOVs designated in Section 2.2.4 as having an active safety-related function open under system pressure, fluid flow, and temperature conditions.	6. Tests of the installed valves for opening will be conducted under preoperational differential pressure, fluid flow, and temperature conditions.	6. Upon receipt of the actuating signal, each MOV opens.
7. The CVs designated in Section 2.2.4 as having an active safety-related function open, close, or both open and close under system pressure, fluid flow, temperature conditions.	7. Tests of the installed valves for opening, closing, or both opening and closing, will be conducted under system preoperational pressure, fluid flow, and temperature conditions.	7. Based on the direction of the differential pressure across the valve, each CV opens, closes, or both opens and closes, depending upon the valve's safety function.

2.2.5 Neutron Monitoring System

Design Description

The Neutron Monitoring System (NMS) is a neutron monitoring and protection system. The functions of the system are to:

(1) Monitor the thermal neutron flux in the reactor core.

(2) Provide trip signals to the Reactor Protection System (RPS).

(3) Provide power information to the operator and plant control systems.

The startup range neutron monitor (SRNM), the local power range monitor (LPRM), and the average power range monitor (APRM) are classified as Class 1E safety-related. The automated incore instrument calibration system and the multi-channel rod block monitor (MRBM) are classified as non-safety-related.

The SRNM monitors neutron flux from the source range to 15% of the rated power. The SRNM has ten SRNM channels, each with one detector, which are distributed throughout the reactor core and assigned to four divisions. The SRNM detector is a fixed in-core sensor. Detector cables are separated according to different divisional assignment, connected to their designated preamplifiers located in the Reactor Building, and then transmitted to signal processing electronic units in the Control Building.

The LPRM monitors local neutron flux in the power range up to 125% of the rated power, and overlaps with part of the SRNM range. LPRM detector assemblies are provided and are distributed in the core, with four sensors per each LPRM assembly, to monitor local neutron flux level throughout the core. The LPRM assembly also contains space for automated in-core calibration detector. The LPRM detector outputs are connected to the APRM signal conditioning units in the Control Building, where the signals are processed and amplified. LPRM detector signals are divided and assigned to four APRM channels corresponding to four divisions. LPRM signals in each APRM channel are summed and averaged to form an APRM signal which represents the core average power.

The Oscillation Power Range Monitor (OPRM) is part of the APRM. Each OPRM receives the identical LPRM signals from the corresponding APRM channel as inputs, and forms many OPRM cells to monitor the neutron flux behavior of all regions of the core. The LPRM signals assigned to each cell are summed and averaged to provide an OPRM signal for this cell. The OPRM trip protection algorithm detects thermal hydraulic instability and provides trip output to the RPS if the trip setpoint is exceeded. The OPRM bypass is controlled by the bypass of the APRM channel it resides with.

The automated in-core instrument calibration system provides local power information at various core locations that correspond to LPRM locations. The automated in-core instrument calibration system uses its own set of in-core detectors for local power measurement and provides local power information for three-dimension core power determination and for the calibration of the LPRMs. The measured data are sent to the Process Computer System for such calculation and LPRM calibration.

The MRBM uses LPRM signals to detect local power change during the rod withdrawal. If the averaged LPRM signal exceeds a preset rod block setpoint, a control rod block demand is issued.

Figure 2.2.5 shows the configuration of each NMS division.

Each of the four divisions of the SRNM, LPRM and APRM instruments is powered by its respective divisional Class 1E power supplies. In the NMS outside the primary containment, independence is provided between Class 1E divisions, and also between the Class 1E divisions and non-Class 1E equipment.

The SRNM and APRM trip signal outputs are in four divisions. The SRNM trip and the APRM trip logic are independent from each other. The SRNM generates a high neutron flux trip or a short period trip signal. Any single SRNM channel trip causes a trip in its division. The APRM can generate a high neutron flux trip, a simulated thermal power (STP) trip signal, a rapid core flow decrease trip signal, or a core power oscillation trip signal. The NMS provides these trip signals to the Reactor Protection System (RPS).

The SRNM and APRM are fail-safe in the event of loss of electrical power to any division of their logic.

The NMS bypass function is performed within the NMS. Within the NMS, the bypass functions of the SRNM and the APRM are separate and independent from each other. The SRNM channels are grouped into three bypass groups. Individual SRNM channels can be bypassed. At any one time, up to three SRNM channels can be bypassed. At any one time, only one APRM channel can be bypassed. A bypassed SRNM channel or a bypassed APRM channel does not cause a trip output sent to the RPS.

The NMS provides SRNM flux permissive signal to the Standby Liquid Control (SLC) System and feedwater runback logic within Safety System Logic and Control (SSLC) and an APRM flux permissive signal to the Nuclear Boiler System (NBS) logic within SSLC as part of the anticipated transient without scram (ATWS) logic. The SRNM and APRM flux permissive signals from the NMS indicate when the reactor power level is above or below the setpoint in order to allow or disallow the initiation of ATWS mitigation features.

The NMS has the following displays and controls in the main control room:

(1) SRNM, LPRM, and APRM neutron flux displays.

(2) Trip and bypass status displays.

(3) Bypass control devices.

Inspections, Tests, Analyses and Acceptance Criteria

Table 2.2.5 provides a definition of the inspections, tests, and/or analyses, together with associated acceptance criteria, which will be undertaken for the NMS.

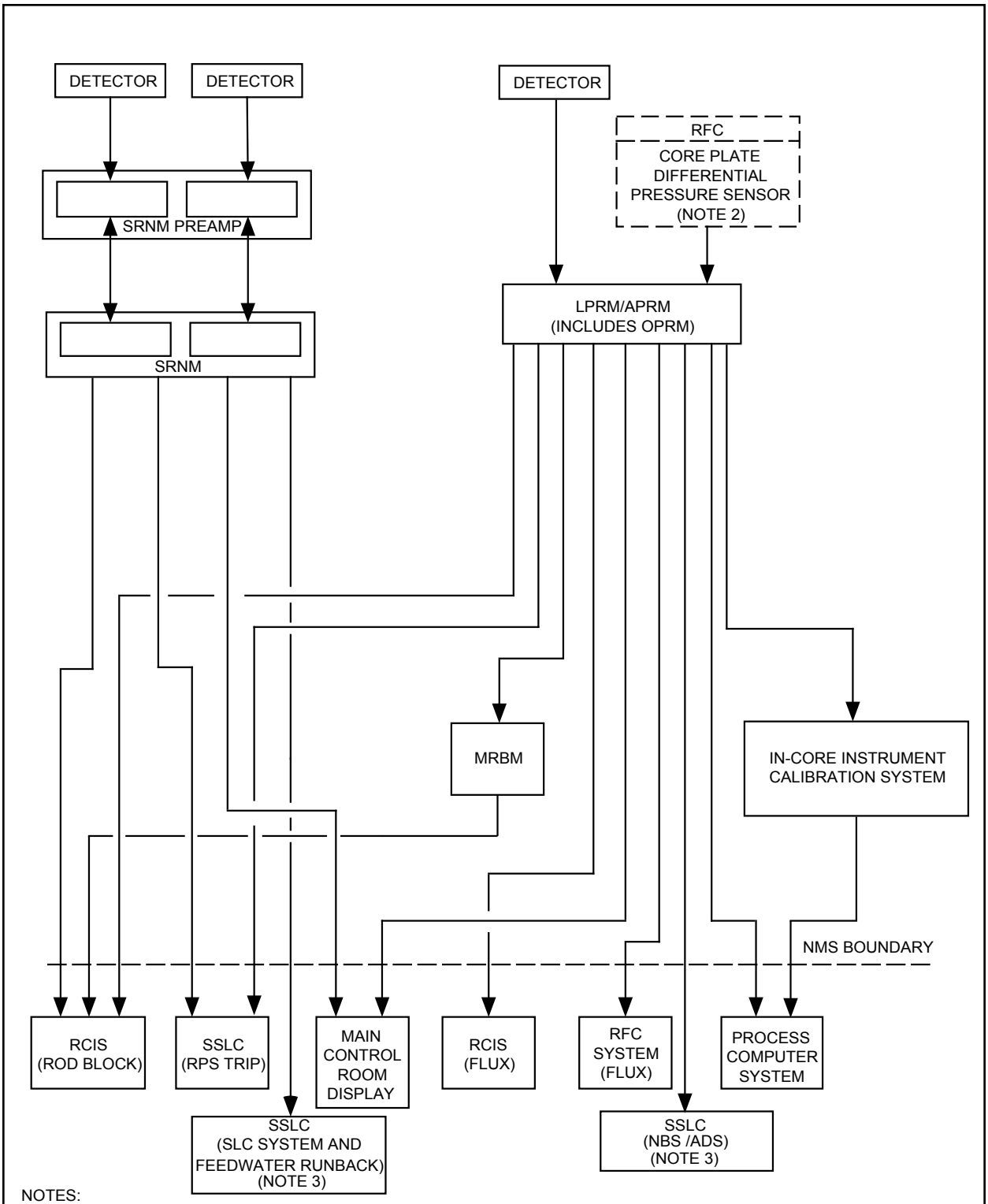

NOTES:
1. DIAGRAM REPRESENTS ONE OF FOUR NMS DIVISIONS (MRBM IS A DUAL CHANNEL SYSTEM. THERE IS ONLY ONE IN-CORE INSTRUMENT CALIBRATION SYSTEM).
2. USED FOR RAPID CORE FLOW DECREASE TRIP.
3. SRNM AND APRM ATWS PERMISSIVE SIGNALS TO SSLC.
4. INTERCONNECTIONS MAY BE FIBER-OPTIC OR METALLIC.

Figure 2.2.5 Neutron Monitoring System

Table 2.2.5 Neutron Monitoring System

Inspections, Tests, Analyses and Acceptance Criteria		
Design Commitment	**Inspections, Tests, Analyses**	**Acceptance Criteria**
1. The equipment comprising the NMS is defined in Section 2.2.5.	1. Inspection of the as-built system will be conducted.	1. The as-built NMS conforms with the description in Section 2.2.5.
2. The OPRM trip protection algorithm detects thermal hydraulic instability and provides trip output to the RPS if the trip setpoint is exceeded.	2. Tests will be conducted on OPRM using simulated LPRM input signals.	2. A trip signal to the RPS is generated when the simulated LPRM signals cause the OPRM signal to exceed the trip setpoint.
3. The MRBM uses LPRM signals to detect local power change during the rod withdrawal. If the averaged LPRM signal exceeds a preset rod block setpoint, a control rod block demand is issued.	3. Tests will be conducted on MRBM using simulated LPRM input signals.	3. A control rod block demand signal is issued when the simulated averaged LPRM signal exceeds the preset rod block setpoint.
4. Each of the four divisions of the SRNM, LPRM and APRM instruments is powered by its respective divisional Class 1E power supplies. In the NMS independence is provided between Class 1E divisions, and between Class 1E divisions and non-Class 1E equipment.	4. a. Tests will be performed on the NMS by providing a test signal to only one Class 1E division at a time. b. Inspection of the as-installed Class 1E divisions in the NMS will be performed.	4. a. The test signal exists only in the Class 1E division under test in the NMS. b. In the NMS, physical separation or electrical isolation exists between Class 1E divisions. Physical separation or electrical isolation exists between these Class 1E divisions and non-Class 1E equipment.
5. The SRNM generates a high neutron flux trip or a short period trip signal. Any single SRNM channel trip causes a trip in the division.	5. Tests will be conducted on the SRNM using simulated neutron flux and period signals.	5. Trip signals are generated when the simulated input signals exceed trip setpoints. Any single SRNM channel trip causes a trip in its division.
6. The APRM can generate high neutron flux trip, a STP trip signal, a rapid core flow decrease trip signal, or a core power oscillation trip signal.	6. Tests will be conducted on the APRM using simulated neutron flux, and core plate differential pressure signals.	6. Trip signals are generated when the trip setpoints for high neutron flux, a high STP, a rapid core flow decrease, and a core power oscillation are exceeded.

Table 2.2.5 Neutron Monitoring System (Continued)

Inspections, Tests, Analyses and Acceptance Criteria		
Design Commitment	**Inspections, Tests, Analyses**	**Acceptance Criteria**
7. The SRNM and APRM are fail-safe in the event of loss of electrical power to any division of their logic.	7. Tests will be conducted on the SRNM and APRM by disconnecting electrical power to one division of logic at a time.	7. Upon loss of electrical power to one division of either the SRNM or APRM a trip signal is generated in that division.
8. Within the NMS, the bypass functions of the SRNM and the APRM are separate and independent from each other. The SRNM channels are grouped into three bypass groups. Individual SRNM channels can be bypassed. At any one time, up to three SRNM channels can be bypassed. At any one time, only one APRM channel can be bypassed.	8. Inspections and tests will conducted on the SRNM and APRM bypass functions.	8. Within the NMS, the bypass functions of the SRNM and the APRM are separate and independent from each other. The SRNM channels are grouped into three bypass groups. Individual SRNM channels can be bypassed. At any one time, up to three SRNM channels can be bypassed. At any one time, only one APRM channel can be bypassed.
9. A bypassed SRNM channel or a bypassed APRM channel does not cause a trip output sent to the RPS.	9. Tests will be conducted on the SRNM and APRM bypassed channels using simulated input signals.	9. No trip output signal is sent to the RPS, when a simulated input signal is provided to a bypassed SRNM or a bypassed APRM channel.
10. The SRNM and APRM flux permissive signals from the NMS indicate when the reactor power level is above or below the setpoint in order to allow or disallow the initiation of ATWS mitigation features.	10. Test will be conducted using simulated SRNM and APRM flux signals.	10. The SRNM and APRM flux permissive signals from the NMS indicate when the reactor power level is above or below the setpoint in order to allow or disallow the initiation of ATWS mitigation features.
11. Main control room displays and controls provided for the NMS are as defined in Section 2.2.5.	11. Inspections will be performed on the main control room displays and controls for the NMS.	11. Displays and controls exist or can be retrieved in the main control room as defined in Section 2.2.5.

2.2.6 Remote Shutdown System

Design Description

The Remote Shutdown System (RSS) provides remote manual control of safety-related systems to bring the reactor to hot shutdown and subsequent cold shutdown conditions from outside the main control room (MCR). Figure 2.2.6 shows the basic system configuration and scope.

The RSS has two divisional panels and associated controls and indicators for interfacing with the following systems:

(1) Residual Heat Removal (RHR) System

(2) High Pressure Core Flooder (HPCF) System

(3) Nuclear Boiler System (NBS)

(4) Reactor Service Water (RSW) System

(5) Reactor Building Cooling Water (RCW) System

(6) Electrical Power Distribution (EPD) System

(7) Atmospheric Control (AC) System

(8) Emergency Diesel Generator (DG)

(9) Make-up Water System (Condensate), (MUWC)

(10) Flammability Control System (FCS)

(11) Suppression Pool Temperature Monitoring (SPTM) System

RSS controls and indicators are hard-wired direct to the interfacing components and sensors.

The RSS is classified as a Class 1E safety-related system.

Operation of transfer switches on the RSS panel overrides and isolates the controls from the MCR and transfers control to the RSS. Transfer switch actuation causes alarms in the MCR. Indications required for plant shutdown are provided on the RSS panels as shown on Figure 2.2.6.

RSS Division A has the following automatic controls and interlocks for RHR System Division A. RSS Division B has the following automatic controls and interlocks for RHR System Division B and HPCF System Division B:

(1) RHR minimum flow valve A(B) is commanded open upon receipt of a signal indicating low RHR flow and high RHR pump discharge pressure. The valve is commanded closed upon receipt of a RHR high flow signal.

(2) RHR pump A (B) is prevented from starting and commanded to stop unless position signals exist which indicate that the valves in the suction piping are fully open.

(3) RHR injection valve A(B) is prevented from opening and commanded closed when reactor vessel pressure is above a setpoint.

(4) RHR shutdown cooling suction valve A is prevented from opening unless S/P return valve A and S/P suction valve A are both fully closed.

(5) RHR shutdown cooling suction valve B is prevented from opening unless S/P return valve B, suppressing pool suction valve B, drywell spray valve B, and wetwell spray valve B are all fully closed.

(6) RHR shutdown cooling isolation suction valves A(B) are prevented from opening and commanded closed when reactor vessel pressure is above a setpoint.

(7) HPCF minimum flow valve B is commanded open upon receipt of a signal indicating low HPCF flow and high HPCF pump discharge pressure. The valve is commanded closed upon receipt of a high HPCF flow signal.

(8) HPCF pump B is prevented from starting and commanded to stop unless position signals exist which indicate that the valves in the suction piping are fully open.

Each of the two RSS divisions is powered from its respective Class 1E division. In the RSS, independence is provided between Class 1E divisions, and also between the Class 1E divisions and non-Class 1E equipment.

The RSS panels are located in the Reactor Building remote from the MCR.

Inspections, Tests, Analyses and Acceptance Criteria

Table 2.2.6 provides a definition of the visual inspections, tests and/or analyses, together with associated acceptance criteria, which will be undertaken for the RSS.

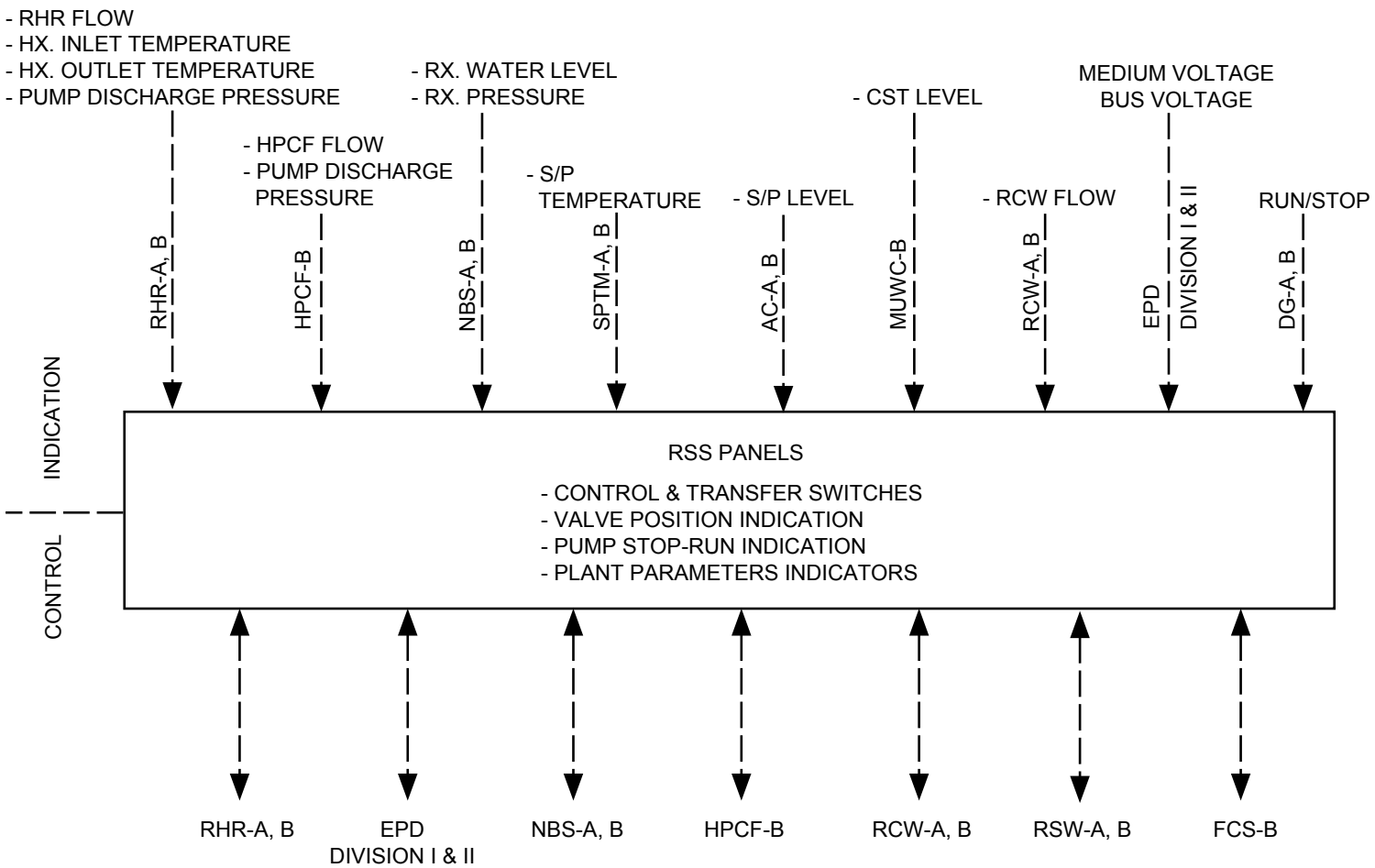

NOTES:
1. RSS PANELS A AND B INTERFACE WITH SYSTEM IN DIVISIONS A AND B (I AND II), RESPECTIVELY.

Figure 2.2.6 Remote Shutdown System

Table 2.2.6 Remote Shutdown System

Inspections, Tests, Analyses and Acceptance Criteria		
Design Commitment	**Inspections, Tests, Analyses**	**Acceptance Criteria**
1. The equipment comprising the RSS is defined in Section 2.2.6.	1. Inspections of the as-built system will be conducted.	1. The as-built RSS conforms with the description in Section 2.2.6.
2. Operation of transfer switches on the RSS panel overrides and isolates the controls from the MCR and transfers control to the RSS.	2. Tests will be conducted on each as-built RSS division by placing the transfer switches in the RSS position. Continuity tests will then be conducted between RSS control devices and interfacing equipment. Additional tests will be conducted to attempt actuation of the interfacing equipment from the MCR.	2. Operation of transfer switches on the RSS panel overrides and isolates the controls from the MCR and transfers control to the RSS.
3. Transfer switch actuation causes alarms in the MCR.	3. Tests will be conducted on each as-built RSS division by placing the transfer switch in the RSS position.	3. Transfer switch actuation causes alarms in the MCR.
4. RSS Division A has the following automatic controls and interlocks for RHR System Division A. RSS Division B has the following automatic controls and interlocks for RHR System Division B and HPCF System Division B:	4. —	4. —
a. RHR minimum flow valve A(B) is commanded open upon receipt of a signal indicating low RHR flow and high RHR pump discharge pressure. The valve is commanded closed upon receipt of a RHR high flow signal.	a. Tests will be conducted on the RSS using simulated RHR System flow and pump discharge pressure signals.	a. RHR minimum flow valve receives an open signal when low flow and high discharge pressure signals are simulated. This valve receives a close signal when a high flow signal is simulated.
b. RHR pump A(B) is prevented from starting and commanded to stop unless position signals exist which indicate that the valves in the suction piping are fully open.	b. Tests will be conducted on the RSS using simulated valve position signals.	b. RHR pump receives a start signal when simulated signals indicate a suction path is fully open. A stop signal is received when simulated signals indicate absence of a fully open suction path.

Table 2.2.6 Remote Shutdown System (Continued)

Inspections, Tests, Analyses and Acceptance Criteria		
Design Commitment	**Inspections, Tests, Analyses**	**Acceptance Criteria**
c. RHR injection valve A(B) is prevented from opening and commanded closed when reactor vessel pressure is above a setpoint.	c. Tests will be conducted on the RSS using simulated reactor vessel pressure signals	c. RHR injection valve receives an open signal when a low reactor vessel pressure signal is simulated. When a high reactor vessel pressure signal is simulated, the open signal is removed and a close signal is received.
d. RHR shutdown cooling suction valve A is prevented from opening unless S/P return valve A and S/P suction valve A are both fully closed.	d. Tests will be conducted on the RSS using simulated valve position signals.	d. RHR shutdown cooling suction valve A receives an open signal only when simulated signals indicate that S/P suction and return valves are both fully closed.
e. RHR shutdown cooling suction valve B is prevented from opening unless S/P return valve B, S/P suction valve B, drywell spray valve B, and wetwell spray valve B are all fully closed.	e. Tests will be conducted on the RSS using simulated valve position signals.	e. RHR shutdown cooling suction valve B receives an open signal only when simulated valve-fully-closed signals are present.
f. RHR shutdown cooling isolation suction valves A(B) are prevented from opening and commanded closed when reactor vessel pressure is above a setpoint.	f. Tests will be conducted on the RSS using simulated reactor vessel pressure signals.	f. RHR shutdown cooling isolation suction valves receives an open signal only when the simulated reactor vessel pressure signal is below a setpoint. The valves receive a close signal when the simulated signal indicates reactor vessel pressure is above a setpoint.
g. HPCF minimum flow valve B is commanded open upon receipt of a signal indicating low HPCF flow and high HPCF pump discharge pressure. The valve is commanded closed upon receipt of a high HPCF flow signal.	g. Tests will be conducted on the RSS using simulated HPCF System flow and pump discharge pressure signals.	g. HPCF minimum flow valve receives an open signal when low flow and high discharge pressure signals are simulated. This valve receives a close signal when a high flow signal is simulated.

Table 2.2.6 Remote Shutdown System (Continued)

Inspections, Tests, Analyses and Acceptance Criteria		
Design Commitment	**Inspections, Tests, Analyses**	**Acceptance Criteria**
h. HPCF pump B is prevented from starting and commanded to stop unless position signals exist which indicate that the valves in the suction piping are fully open.	h. Tests will be conducted on the RSS using simulated valve position signals.	h. HPCF pump is permitted to start when simulated signals indicate a suction path is fully open. A stop signal is received when simulated signals indicate absence of a fully open suction path.
5. Each of two RSS divisions is powered from its respective Class 1E division. In the RSS, independence is provided between Class 1E divisions, and between Class 1E divisions and non-Class 1E equipment.	5. a. Tests will be performed on the RSS by providing a test signal in only one Class 1E division at a time. b. Inspection of the as-built Class 1E divisions in the RSS will be performed.	5. a. The test signal exists only in the Class 1E division under test in the RSS. b. In the RSS, physical separation or electrical isolation exists between Class 1E divisions. Physical separation or electrical isolation exists between these Class 1E division and non-Class 1E equipment.

2.2.7 Reactor Protection System

Design Description

The Reactor Protection System (RPS) is an instrumentation and control system and its purpose is to initiate reactor scram whenever RPS logic requirements for scram initiation are satisfied.

As shown in Figure 2.2.7a, the RPS interfaces with the Neutron Monitoring System (NMS), Nuclear Boiler System (NBS), Control Rod Drive (CRD) System, Rod Control and Information System (RCIS), Recirculation Flow Control (RFC) System, Suppression Pool Temperature Monitoring System (SPTM), and the Essential Multiplexing System (EMS). Figure 2.2.7a also depicts the implementation of RPS logic within the Safety System Logic and Control (SSLC).

The RPS has four divisions. Figure 2.2.7b shows the RPS divisional aspects and the signal flow paths from sensors to scram pilot valve solenoids. Equipment within an RPS division consists of sensors (transducers or switches), multiplexers, digital trip modules (DTM), trip logic unit (TLU), output logic unit (OLU), and load drivers (LD). The LDs are only in Divisions II and III.

The RPS is classified as a Class 1E safety-related system.

The RPS consists of logic and circuitry for initiation of both automatic and manual scrams. The automatic scram function is comprised of four independent divisions of sensor instrument channels, hardware/software based logic, and two independent divisions of actuating devices. Automatic scram is initiated whenever a scram condition is detected by two or more automatic divisions of RPS logic. For automatic scram, the sensor input signals to the RPS originate either from the RPS's own sensors or other systems' sensors. For determination of the existence of an automatic scram condition, within each automatic scram channel of the RPS, the DTM of a given RPS channel compares the monitored process variable with the stored setpoint in its memory and issues a trip signal if the monitored process variable exceeds the setpoint. The DTM then sends the trip signal to the TLU of its own channel and the TLUs of the other three channels of RPS, where two-out-of-four voting is performed (see Figure 2.2.7b).

In the case of high suppression pool average temperature trip and inboard/outboard MSIV closure signals, the SPTM module of SSLC and NBS provide their divisional trip signals directly to the corresponding divisional RPS DTM. However, in the case of the NMS, the four channels of the NMS each provide their trip signals to each RPS divisional TLU. A list of conditions that can cause automatic reactor scram is provided

below. The name of the system that provides the sensor input signal or the trip signal is shown in brackets.

(1) Turbine Stop Valves Closure at above 40% power levels [RPS]

(2) Low Turbine Control Valves Oil Pressure (Fast Closure) at above 40% power levels [RPS]

(3) NMS Trips [Discrete trip signals to RPS TLUs]

(4) High Reactor Pressure [NBS]

(5) Low Reactor Water Level [NBS]

(6) High Drywell Pressure [NBS]

(7) Main Steamline Isolation [NBS discrete signals to RPS DTMs]

(8) Low Control Rod Drive Accumulator Charging Header Pressure [CRD]

(9) High Suppression Pool Average Temperature [SPTM Module of SSLC trip signals to RPS DTMs]

The TLUs provide their trip signals to their divisional OLUs which are used to control the solid-state LDs that control the Class 1E AC power to the scram solenoids, and relays that control DC power to back-up scram valves. For automatic scram initiation, the TLU trip signals cause the LDs to interrupt Class 1E AC power to the scram solenoids (fail-safe logic), cause the back-up scram relays to supply DC power to back-up scram solenoids, and provide scram follow signals to the RCIS. Each division of RPS controls eight LDs. The LDs are arranged to switch AC power to the scram solenoids in a two-out-of-four format. That is, reactor scram will occur only if two or more divisions of the RPS provide trip signals to their associated LDs.

Manual scram function, which is separate and independent from automatic scram logic, is implemented in Divisions II and III of the RPS. For manual scram initiation, two manual scram push buttons of the RPS must be simultaneously depressed. When manual scram is initiated, the RPS, through manual scram switches, interrupts Class 1E AC power to the scram solenoids, connects divisional Class 1E DC power to back-up scram solenoids, and provides scram follow signals to RCIS. The RPS logic seals in the scram signals and permits reset of scram logic after a time delay of at least 10 seconds.

RPS initiates a reactor internal pump (RIP) trip on receipt of either a turbine stop valve closure or a low turbine control valve oil pressure signal when the reactor power is above 40% (from a turbine first stage pressure signal).

The RPS design is single-failure-proof and redundant. Also, the RPS design is fail-safe in the event of loss of electrical power to one division of RPS logic.

Each of the four RPS divisional logic and associated sensors are powered from their respective divisional Class 1E power supply. In the RPS, independence is provided between Class 1E divisions, and also between the Class 1E divisions and non-Class 1E equipment.

As shown on Figure 2.2.7a, the RPS has manual divisional trip switches, reactor mode switch, manual scram switches, and scram reset switches for manual controls. Divisional trip displays, and scram solenoids electrical power status lights are also provided. These RPS controls and displays are provided in the main control room. Fail safe RPS sensors are turbine control valve oil pressure switches, turbine stop valve position switches, and turbine first-stage pressure sensors. These sensors are located in the Turbine Building.

Inspections, Tests, Analyses and Acceptance Criteria

Table 2.2.7 provides a definition of the inspections, tests, and/or analyses, together with associated acceptance criteria, which will be performed for the RPS.

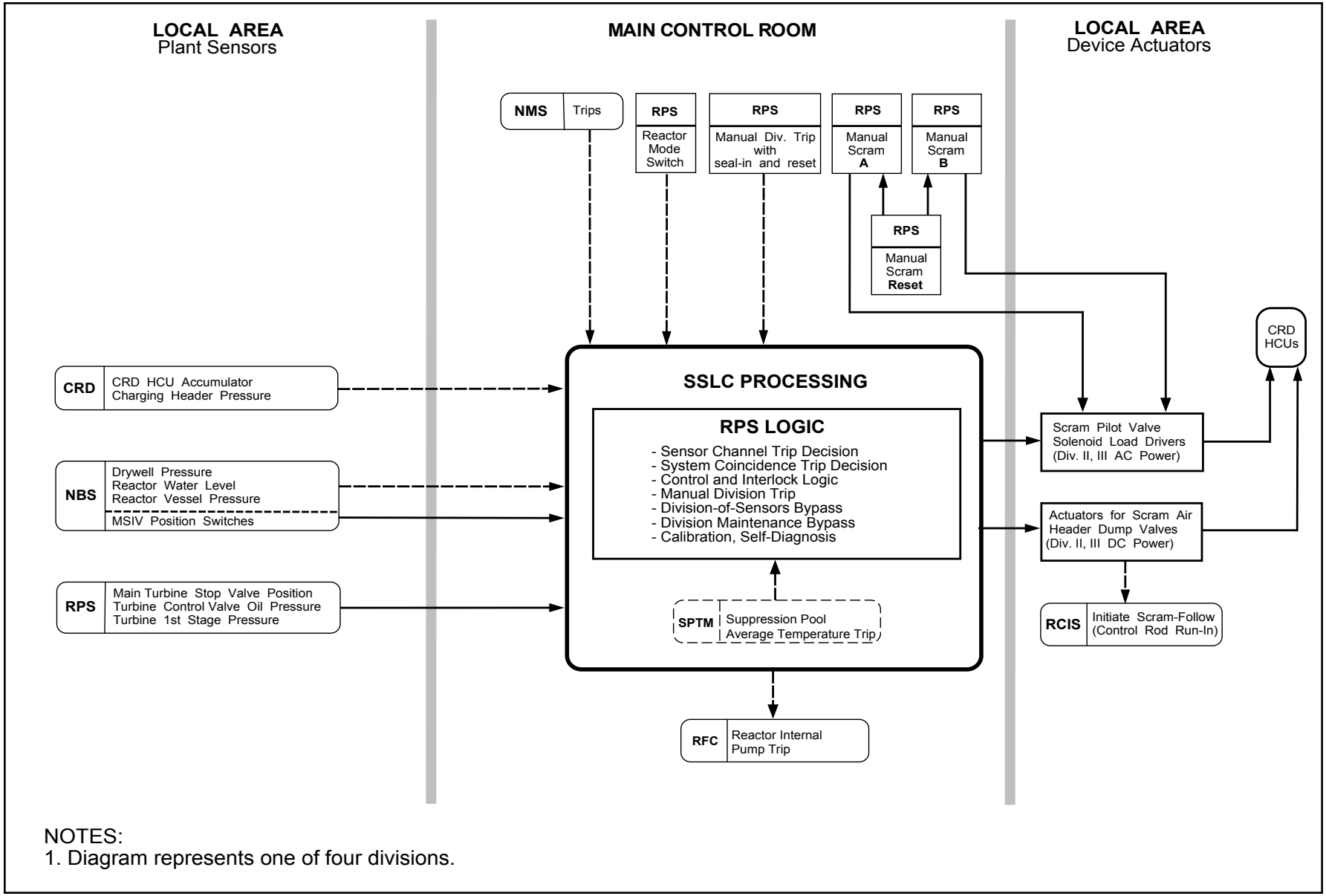

NOTES:
1. Diagram represents one of four divisions.

Figure 2.2.7a Reactor Protection System Control Interface Diagram

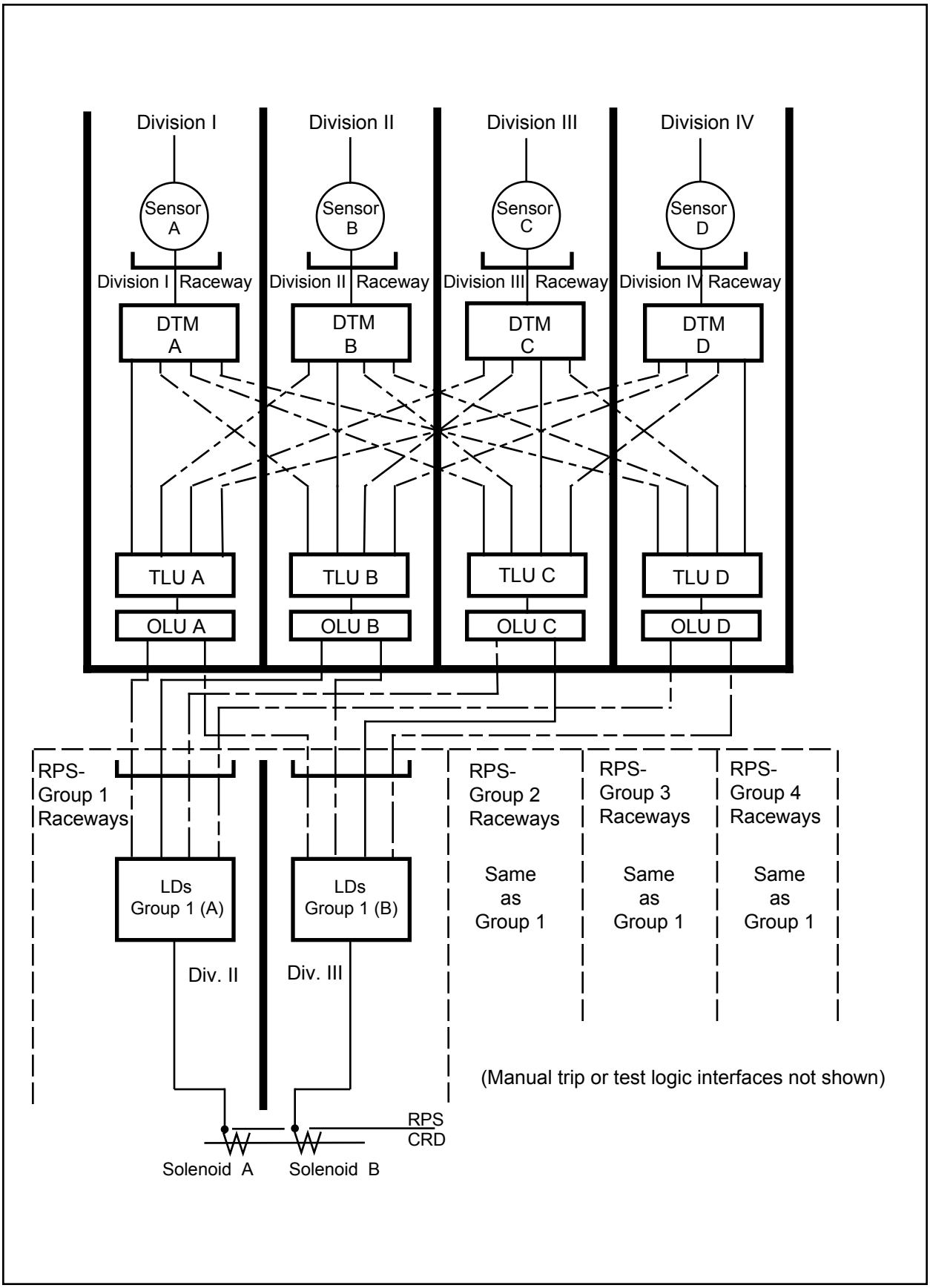

Figure 2.2.7b Reactor Protection System

Table 2.2.7 Reactor Protection System

Inspections, Tests, Analyses and Acceptance Criteria		
Design Commitment	**Inspections, Tests, Analyses**	**Acceptance Criteria**
1. The Equipment comprising the RPS is defined in Section 2.2.7.	1. Inspection of the as-built system will be conducted.	1. The as-built RPS conforms with the description in Section 2.2.7.
2. RPS logic uses four independent sensor instrument channels of each process variable described in Section 2.2.7 for its automatic scram function.	2. Tests will be conducted using simulated input signals for each process variable to cause trip conditions in two, three, and four instrument channels of the same process variable of the RPS.	2. The RPS LDs change their states to interrupt electrical power to scram solenoids. RPS back-up scram relays close and RCIS relays close to provide signals to RCIS.
3. For manual scram initiation two manual scram push buttons of the RPS must be simultaneously depressed.	3. Tests will be conducted by depressing the scram push button A, the B scram push-button, and both.	3. When manual scram push-button A is depressed Division II AC power to A scram solenoids is interrupted. When scram push button B is depressed Division III AC power to B scram solenoids is interrupted. When both A & B scram push buttons are depressed reactor scram occurs, RPS back-up scram relays close to energize the solenoids of scram air header dump valves and RCIS relays close to provide signals to the RCIS.
4. The RPS logic seals in the scram signal, and permits reset of scram logic after a time delay of at least 10 seconds.	4. Tests will be conducted by attempting to reset RPS scram circuitry during the 10 seconds time period after scram initiation.	4. During the 10 second time period after scram initiation, reset does not occur.
5. RPS initiates an RIP trip on receipt of either a turbine stop valve closure or a low turbine control valve oil pressure signal when reactor power is above 40% (from a turbine first stage signal).	5. Test will be conducted on the as-built RPS using simulated turbine stop valve position, turbine control valve oil pressure and turbine first stage pressure signals.	5. The RPS initiates an RIP trip on receipt of either a simulated signals indicating turbine stop valve closure or low control valve oil pressure when reactor power is above 40%.

Table 2.2.7 Reactor Protection System (Continued)

Inspections, Tests, Analyses and Acceptance Criteria		
Design Commitment	**Inspections, Tests, Analyses**	**Acceptance Criteria**
6. RPS design is fail-safe in the event of loss of electrical power to one division of RPS logic.	6. Tests will be conducted by disconnecting electrical power to one division of RPS logic at a time.	6. Upon loss of electrical power to one division of RPS logic, the LDs of that division change their state to interrupt electrical power to scram solenoids.
7. Each of the four RPS divisional logic and associated sensors are powered from their respective divisional Class 1E power supply. In the RPS, independence is provided between Class 1E divisions, and between Class 1E divisions and non-Class 1E equipment.	7. a. Tests will be conducted on the as-built RPS by providing a test signal to only one Class 1E division at a time. b. Inspection of the as-installed Class 1E divisions in the RPS will be performed.	7. a. The test signal exists only in the Class 1E division under test in the RPS. b. In the RPS physical separation or electrical isolation exists between Class 1E divisions. Physical separation or electrical isolation exists between these Class 1E divisions and Non-Class 1E equipment.
8. Main control room displays and controls provided for the RPS are as defined in Section 2.2.7.	8. Inspections will be performed on the main control room displays and controls for the RPS.	8. Displays and controls exist or can be retrieved in the main control room as defined in Section 2.2.7.

2.2.8 Recirculation Flow Control System

Design Description

The Recirculation Flow Control (RFC) System controls reactor power by controlling the recirculation flow rate through the reactor core. This is achieved by modulating the recirculation internal pump (RIP) speeds using voltage and frequency modulation of adjustable speed drive (ASD) outputs.

The RFC System consists of redundant microprocessor-based controllers, adjustable speed drives, and motor generator (MG) sets. There are two MG sets, each of which supplies three of the ten ASDs which power the ten RIPs. The other four ASDs receive power directly from the power supply bus. No more than three RIPs are connected to any one power supply bus.

The RFC System operates in either manual or automatic control modes and has the control interfaces shown on Figure 2.2.8.

Except for the core plate differential pressure sensors provided for the Neutron Monitoring System (NMS), the RFC System is classified as non-safety-related. The four core plate differential pressure sensors for the NMS are classified as Class 1E safety-related.

The RFC System has the logic to generate the following signals to mitigate an anticipated transient without scram (ATWS) event:

(1) A signal to open the alternate rod insertion (ARI) valves in the Control Rod Drive (CRD) System on a high reactor vessel pressure signal, a low reactor water level signal, or a manual RFC System signal.

(2) A signal to the Rod Control and Information System (RCIS) to initiate electrical insertion of all control rods on a high reactor vessel pressure signal, a low reactor water level signal, or a manual control rod insertion signal.

(3) A signal to trip the four RIPs not connected to MG sets on either a high reactor vessel pressure signal or a low reactor water level signal (the latter is not an ATWS mitigation feature).

(4) A signal to trip the six RIPs connected to MG sets on a low reactor water level signal. Three of the six RIPs are tripped after a preset time delay.

(5) A manual RFC System signal to Safety System Logic and Control (SSLC) to initiate the Standby Liquid Control (SLC) System and to initiate Feedwater Control (FDWC) System runback of feedwater flow.

The RFC System logic issues a signal to the RCIS for selected control rod run-in (SCRRI) to provide stability control when the following conditions occur:

(1) Two or more RIPs are tripped, and

(2) The reactor power is at or above the preset level, and

(3) Core flow is at or below the preset level.

The RFC System has the logic to generate the following protective signals:

(1) A signal to reduce all RIP speed on receipt of a signal from the RCIS that an all-rod insertion condition exists (which includes conditions of high reactor vessel pressure, low reactor vessel water level or manual RFC System initiation).

(2) A signal to trip four RIPs when Reactor Protection System (RPS) provides an RIP trip signal.

When the RIP MG set's power supply breakers open, the MG sets are capable of holding the connected RIPs at their original speeds for at least one second and, after 1 second, assure the speed is at or above a speed coastdown curve defined by a rate of speed decrease of 10% per second for an additional two seconds.

Each channel of the RFC System controller is powered by separate non-Class 1E uninterruptible power supplies. Each of the four safety-related RFC System core plate differential pressure sensors is powered from its respective divisional Class 1E power supply. In the RFC System, independence is provided between the Class 1E divisions, and also between the Class 1E divisions and non-Class 1E equipment.

The RFC System digital controllers are located in the Control Building. The ASDs and core plate differential pressure sensors are located in the Reactor Building.

Inspections, Tests, Analyses and Acceptance Criteria

Table 2.2.8 provides a definition of the inspections, tests, and/or analyses, together with the associated acceptance criteria, which will be undertaken for the RFC System.

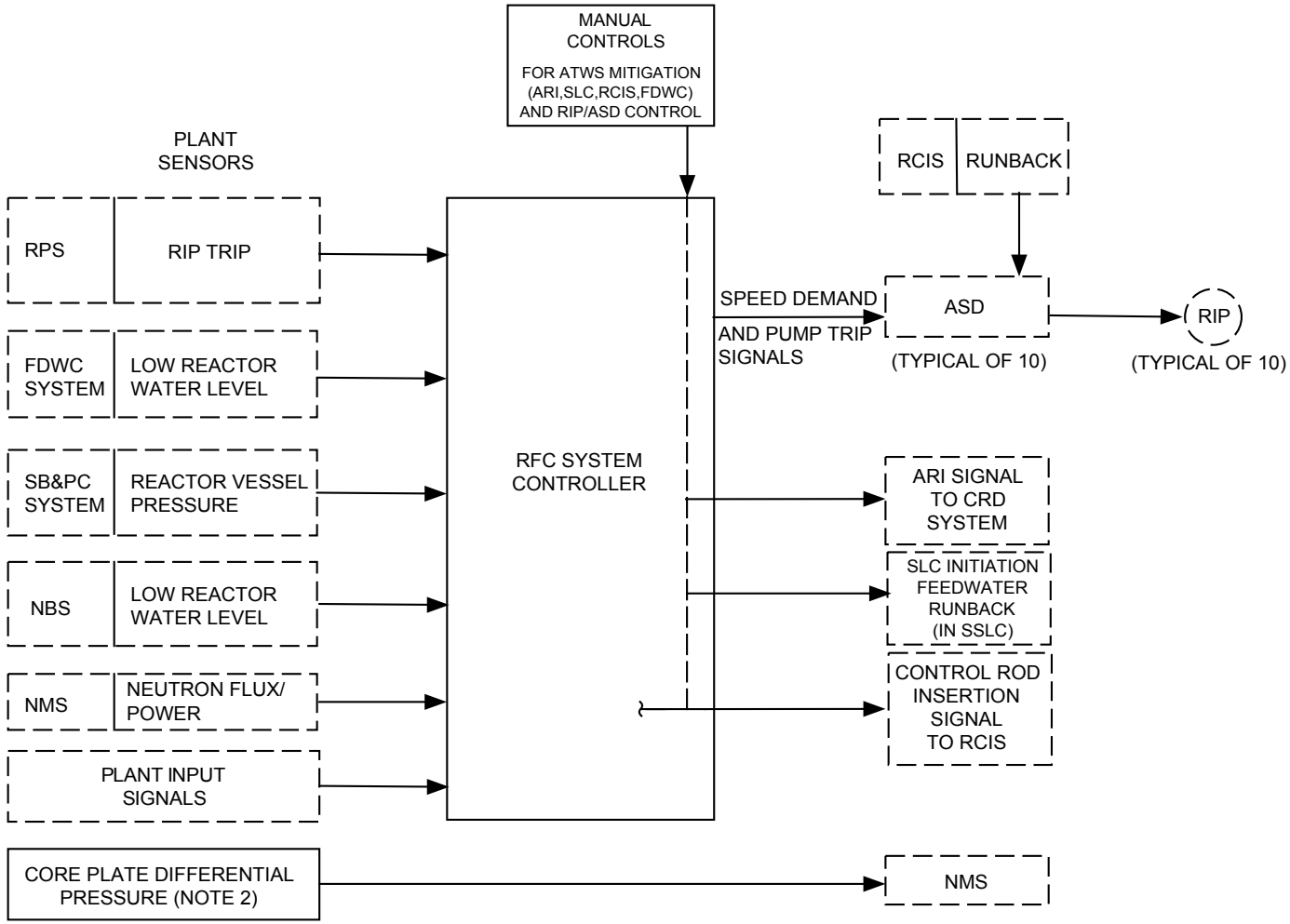

NOTE:
1. INTERCONNECTIONS MAY BE FIBER-OPTIC OR METALLIC.
2. ONE SENSOR ASSIGNED TO EACH OF FOUR CLASS 1E DIVISIONS.

Figure 2.2.8 Recirculation Flow System Control Interface Diagram

Table 2.2.8 Recirculation Flow Control System

Inspections, Tests, Analyses and Acceptance Criteria		
Design Commitment	**Inspections, Test, Analyses**	**Acceptance Criteria**
1. The equipment comprising the RFC System is defined in Section 2.2.8.	1. Inspections of the as-built system will be conducted.	1. The as-built RFC System conforms with the description in Section 2.2.8.
2. RFC System consists of redundant microprocessor based controllers.	2. Tests will be conducted by simulating failure of each operating RFC System controller.	2. There is no loss of RFC System output upon loss of any one controller.
3. The RFC System has the following logic to mitigate an ATWS event: a. A signal to open the ARI valves of the CRD System on a high reactor vessel pressure signal, a low reactor water level signal, or a manual RFC System signal. b. A signal to the RCIS to initiate electrical insertion of all control rods on a high reactor vessel pressure signal, a low reactor water level signal, or a manual control rod insertion signal.	3. Tests will be conducted on the as-built RFC System using simulated reactor vessel pressure, reactor water level, and RFC System manual signals.	3. The RFC System logic issues the following signals to mitigate an ATWS event: a. A signal to open the ARI valves of the CRD System upon receipt of a simulated high reactor vessel pressure signal, a simulated low reactor water level signal, or a simulated manual RFC System signal. b. A signal to the RCIS to initiate electrical insertion of all control rods upon receipt of a simulated high reactor vessel pressure signal, a simulated low reactor water level signal, or a simulated manual control rod insertion signal.

Table 2.2.8 Recirculation Flow Control System (Continued)

Inspections, Tests, Analyses and Acceptance Criteria		
Design Commitment	**Inspections, Test, Analyses**	**Acceptance Criteria**
3. (continued) c. A signal to trip the four RIPs not connected to MG sets on either a high reactor vessel pressure signal, or a low reactor water level signal. d. A signal to trip the six RIPs connected to MG sets on a low reactor water level signal. Three of the six RIPs are tripped ater a preset time delay. e. A manual RFC System signal to SSLC to initiate the SLC System and to initiate FDWC System runback of feedwater flow.	3. (continued)	3. (continued) c. A signal to trip the four RIPs not connected to MG sets upon receipt of either a simulated high reactor vessel pressure signal, or a simulated low reactor water level signal. d. A signal to trip the six RIPs connected to MG sets upon receipt of a simulated low reactor water level signal. Three of the six RIPs trip after a preset time delay. e. A signal to initiate the SLC System and to initiate FDWC System runback of feedwater flow upon receipt of a simulated manual RFC System signal to SSLC.
4. The RFC System logic issues a signal to the RCIS for SCRRI to provide stability control when the following conditions occur: a. Two or more RIPs are tripped, and b. The reactor power is at or above a preset level, and c. Core flow is at or below a preset level.	4. Tests will be conducted on the as-built RFC System using simulated two RIPs tripped, reactor power, and core flow signals.	4. The RFC System logic issues signal to the RCIS for SCRRI upon receipt of simulated signals for: a. Two or more RIPs are tripped, and b. The reactor power is at or above a preset level, and c. Core flow is at or below a preset level.

Table 2.2.8 Recirculation Flow Control System (Continued)

Inspections, Tests, Analyses and Acceptance Criteria		
Design Commitment	**Inspections, Test, Analyses**	**Acceptance Criteria**
5. The RFC System logic generates the following protective signals: a. A signal to reduce all RIP speed on receipt of a signal from the RCIS that an all-rod insertion condition exists. b. A signal to trip four RIPs when RPS provides an RIP trip signal.	5. Tests will be conducted on the as-built RFC System using simulated reactor water level, all-rod insertion and trip signals	5. The RFC System logic issues the following protective signals: a. A signal to reduce all RIP speed upon receipt of a simulated all-rod insertion signal. b. A signal to trip four RIPs on receipt of a simulated trip signal.
6. After the power supply breakers open to the MG set, the MG sets are capable of holding the connected RIPs at their original speeds for at least one second and, after 1 second, assure the speed is at or above a speed coastdown curve defined by a rate of speed decrease of 10% per second for an additional two seconds.	6. Tests will be conducted at a test facility with an M/G set and three associated ASDs using simulated full load characteristics of the RIPs and disconnecting power to M/G sets while operating at full speeds, or analyses will be performed to demonstrate applicability of prior tests and test results to the as-built RFC System MG sets and ASDs.	6. After the power supply breakers open to the MG set, the ASD output frequency remains within 1% of the original output frequency for at least one second, and then for an additional two seconds the ASD output frequency shall be equal to or greater than a curve defined by a rate of frequency decrease of 10% per second.
7. Each channel of the RFC System digital controller is powered by separate non-Class 1E uninterruptible power supplies.	7. Tests will be performed by providing a test signal in only one uninterruptible power supply at a time.	7. The test signals exist in only one digital control channel at a time.
8. Each of the four RFC System core plate differential pressure sensors is powered from its respective divisional Class 1E power supply. In the RFC System, independence is provided between Class 1E divisions, and between Class 1E divisions and non-Class 1E equipment.	8. a. Tests will be performed on the RFC System by providing a test signal in only one Class 1E division at a time. b. Inspection of the as-built Class 1E divisions in the RFC System will be performed.	8. a. The test signal exists only in the Class 1E division under test in the RFC System. b. In the RFC System, physical separation or electrical isolation exists between Class 1E divisions. Physical separation or electrical isolation exists between these Class 1E divisions and non-Class 1E equipment.

2.2.9 Automatic Power Regulator System

Design Description

The Automatic Power Regulator (APR) System controls reactor power during reactor startup, power generation, and reactor shutdown by commands, either directly or indirectly, to change rod positions, or to change reactor recirculation flow or load setpoint. The APR System consists of redundant digital controllers and has the interfaces shown in the control interface diagram on Figure 2.2.9.

The APR System is classified as non-safety-related.

The APR System operates in either manual or automatic control mode. The system control logic is performed by redundant, digital controllers. The digital controller receives inputs from interfacing system via the non-essential multiplexing system (NEMS). It performs power control calculations and provides system outputs to the NEMS.

The APR System digital controllers are located in the Control Building.

Inspections, Tests, Analyses and Acceptance Criteria

Table 2.2.9 provides a definition of the inspections, tests and/or analyses, together with associated acceptance criteria, which will be undertaken for the APR System.

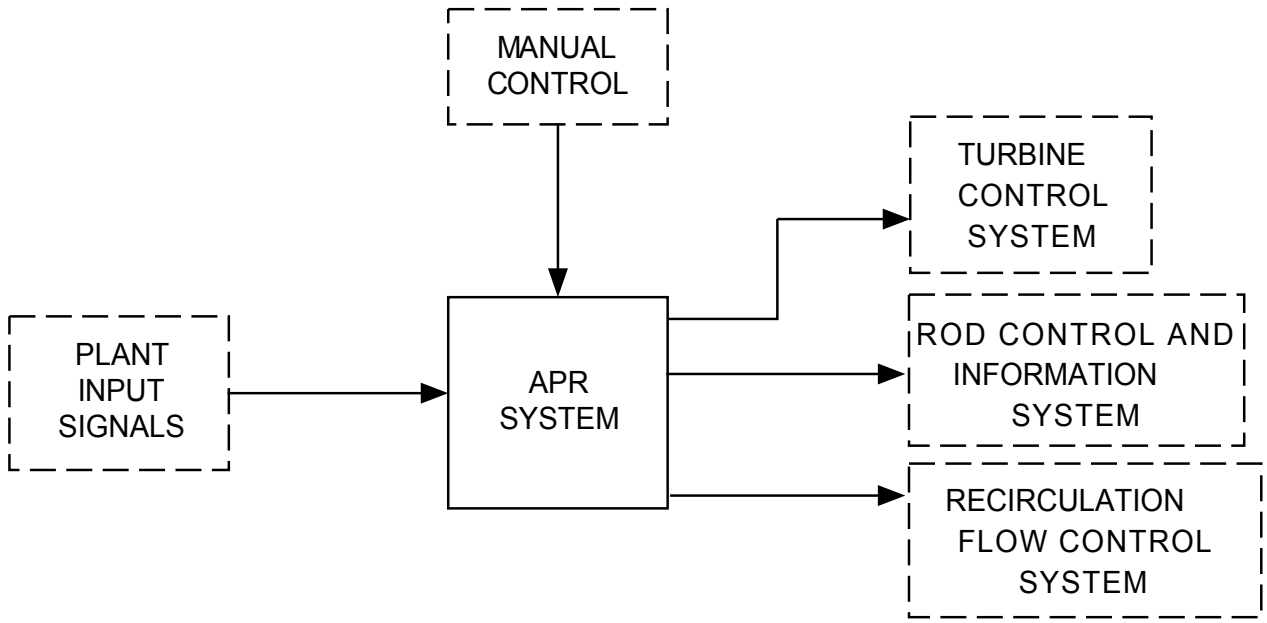

NOTE:
1. INTERCONNECTIONS MAY BE FIBER-OPTIC OR METALLIC.

Figure 2.2.9 Automatic Power Regulator System Control Interface Diagram

Table 2.2.9 Automatic Power Regulator System

Inspections, Tests, Analyses and Acceptance Criteria		
Design Commitment	**Inspections, Tests, Analyses**	**Acceptance Criteria**
1. The equipment comprising the APR System is defined in Section 2.2.9.	1. Inspections of the as-built system will be conducted.	1. The as-built APR System conforms with description in Section 2.2.9.
2. The system control logic is performed by redundant digital controllers.	2. Tests will be performed by simulating failure of each operating APR System digital controller.	2. There is no loss of APR System output upon loss of any one digital controller.

2.2.10 Steam Bypass and Pressure Control System

Design Description

The Steam Bypass and Pressure Control (SB&PC) System controls the reactor pressure during reactor startup, power generation, and reactor shutdown by control of the turbine bypass valves and signals to the Turbine Control System which controls the turbine control valves. The SB&PC System consists of redundant digital controllers and has the interfaces shown in the control interface diagram on Figure 2.2.10.

The SB&PC System is classified as non-safety-related.

The SB&PC System operates in either manual or automatic control modes. The system control calculations and logic are performed by redundant digital controllers.

The SB&PC System digital controllers are located in the Control Building.

Inspections, Tests, Analyses and Acceptance Criteria

Table 2.2.10 provides a definition of the inspections, tests, and/or analyses, together with associated acceptance criteria, which will be undertaken for the SB&PC System.

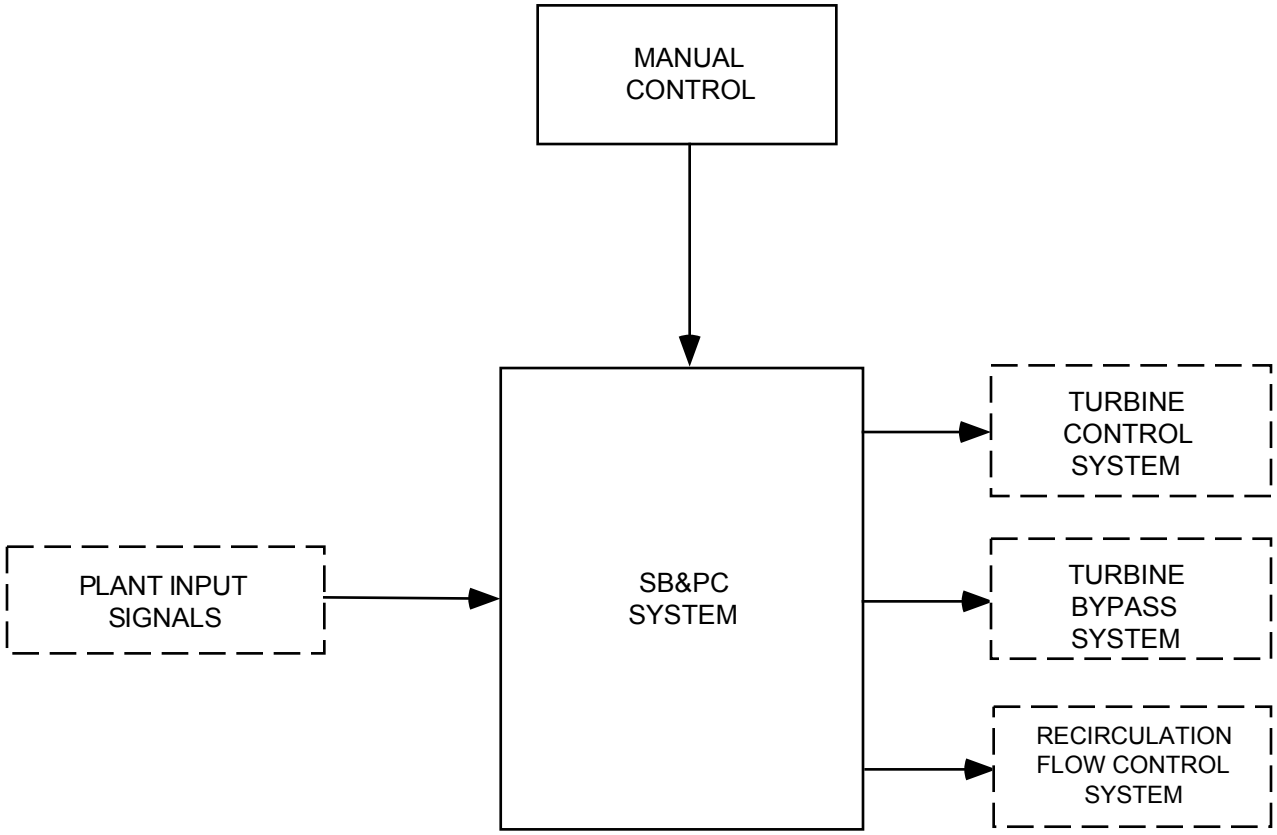

NOTE:
1. INTERCONNECTIONS MAY BE FIBER-OPTIC OR METALLIC.

Figure 2.2.10 Steam Bypass and Pressure Control System Control Interface Diagram

Table 2.2.10 Steam Bypass and Pressure Control System

Inspections, Tests, Analyses and Acceptance Criteria		
Design Commitment	**Inspections, Tests, Analyses**	**Acceptance Criteria**
1. The equipment comprising the SB&PC System is defined in Section 2.2.10.	1. Inspections of the as-built system will be conducted.	1. The as-built SB&PC System conforms with the description in Section 2.2.10.
2. The SB&PC System consists of redundant digital controllers.	2. Tests will be performed by simulating failure of each operating SB&PC System digital controller.	2. There is no loss of SB&PC System output upon loss of any one digital controller.
3. The SB&PC System controls the reactor pressure during reactor startup, power generation, and reactor shutdown by control of the turbine bypass valves and signals to the Turbine Control System which controls the turbine control valves.	3. A test will be conducted by simulating an increasing reactor pressure signal.	3. Signals to decrease the reactor pressure occur for the turbine bypass valves and the Turbine Control System.

2.2.11 Process Computer System

Design Description

The Process Computer System (PCS) consists of redundant digital central processing units and associated peripheral equipment and is classified as a non-safety-related system.

The PCS performs local power range monitor (LPRM) calibrations and calculations of fuel operating thermal limits data which it provides to the automated thermal limit monitor (ATLM) function of the Rod Control & Information System (RCIS) for the purpose of updating rod block setpoints.

The PCS functions also as a top-level controller which monitors the overall plant conditions, issues control commands and adjusts setpoints of lower level controllers to support automation of the normal plant startup, shutdown and power range operations. In the event that abnormal conditions develop in the plant during operations in the automatic mode, the PCS automatically reverts to the manual mode of operation.

Inspections, Tests, Analyses and Acceptance Criteria

Table 2.2.11 provides a definition of the inspections, tests and/or analyses, together with associated acceptance criteria, which will be undertaken for the PCS.

Table 2.2.11 Process Computer System

Inspections, Tests, Analyses and Acceptance Criteria		
Design Commitment	**Inspections, Tests, Analyses**	**Acceptance Criteria**
1. The equipment comprising the PCS is defined in Section 2.2.11.	1. Inspections of the as-built system will be conducted.	1. The as-built PCS conforms with the description in Section 2.2.11.
2. The PCS provides LPRM calibration and fuel operating thermal limits data to the ATLM function of the RCIS.	2. Tests of the as-built PCS will be conducted using simulated plant input signals.	2. LPRM calibration and fuel thermal limits data are received by the ATLM function of the RCIS.
3. In the event that abnormal conditions develop in the plant during operations in the automatic mode, the PCS automatically reverts to the manual operating mode.	3. Tests of the as-built PCS will be conducted using simulated abnormal plant input signals, while the PCS is in the automatic operating mode.	3. Upon receipt of the abnormal plant input signals, the PCS automatically reverts to the manual operating mode.

2.2.12 Refueling Platform Control Computer

No entry for this system.

2.2.13 CRD Removal Machine Control Computer

No entry for this system.

2.3.1 Process Radiation Monitoring System

Design Description

The Process Radiation Monitoring (PRM) System measures and displays radioactivity levels in process and effluent gaseous and liquid streams, initiates protective actions, and activates alarms in the main control room (MCR) on high radiation signals. The PRM System provides radiological monitoring during plant operation and following an accident. PRM System equipment consists of radiation sensors, radiation process monitors, and effluent samplers. The PRM System consists of independent subsystems each of which contains between one and four monitoring channels. Figure 2.3.1 shows the PRM System control interfaces. As shown on Figure 2.3.1, the PRM System safety-related channel trip signals are provided as inputs to the Safety System Logic and Control (SSLC) for generation of protective action signals.

Portions of the PRM System are classified as Class 1E safety-related (items 1 through 5 below); the remainder are classified as non-safety-related.

The PRM System provides the following monitoring functions:

(1) Main Steam Line (MSL) Tunnel Area (4 channels)

The MSL tunnel area is monitored for gamma radioactivity in the steam flow to the turbine. Protective action signals are automatically initiated when any two out of four channels trip.

(2) Reactor Building Heating, Ventilating and Air Condition (HVAC) Exhaust (4 channels)

The air vent exhaust from the secondary containment is monitored for gamma radioactivity. Protective action signals are automatically initiated when any two out of four channels trip.

(3) Fuel Handling Area Ventilation Exhaust (4 channels)

The air vent exhaust from the fuel handling area is monitored for gamma radioactivity. Protective action signals are automatically initiated when any two out of four channels trip.

(4) Control Building Intake Air Supply (4 channels per intake)

The air supply intake to the Control Building is monitored for gamma radioactivity. Protective action signals are automatically initiated when any two out of four channels trip.

(5) Drywell Sump Liquid Discharge (1 channel per sump)

The liquid waste discharged from each of the drywell LCW and HCW sumps to the Radwaste Building is monitored for gamma radioactivity. A protective action signal is automatically initiated when a channel trips.

(6) Off-Gas Post-Treatment Discharge (2 channels)

The off-gas discharge from the charcoal vault to the stack is sampled and monitored for airborne radioactivity. Protective action signals are automatically initiated when both channels trip.

(7) Plant Stack Discharge (2 channels)

The ventilation and the gaseous discharge from the plant stack is sampled and monitored for airborne radioactivity. An alarm is initiated when the detected radiation level exceeds the trip setpoint.

(8) Radwaste Liquid Discharge (1 channel)

The radwaste liquid discharged from the plant is sampled and monitored for gamma radioactivity. A protective action signal is automatically initiated when the channel trips.

(9) Intersystem Radiation Leakage (3 channels)

Reactor coolant leakage into the Reactor Building Cooling Water (RCW) System is monitored for gamma radioactivity. One channel is provided for each RCW System division. An alarm is initiated when the detected radiation level exceeds the trip setpoint.

(10) Turbine Gland Seal Condenser Exhaust (1 channel)

The exhaust discharged from the turbine gland seal condenser is monitored for gamma radioactivity. An alarm is initiated when the detected radiation level exceeds the trip setpoint.

Each safety-related PRM System radiation monitoring channel is powered from its respective divisional Class 1E power source. In the PRM System, independence is provided between Class 1E divisions, and also between the Class 1E divisions and non-Class 1E equipment.

The PRM System radiation sensors and the effluent samplers are installed locally in the plant, while the radiation process monitors are located in the Control Building.

The PRM System has the following alarms and displays in the MCR:

(1) Displays of radiation levels.

(2) Channel trip status.

(3) Plant stack discharge, intersystem leakage, and turbine gland seal condenser exhaust radiation alarms.

Inspections, Tests, Analyses and Acceptance Criteria

Table 2.3.1 provides a definition of the inspections, tests and/or analyses, together with the associated acceptance criteria, which will be undertaken for the Process Radiation Monitoring System.

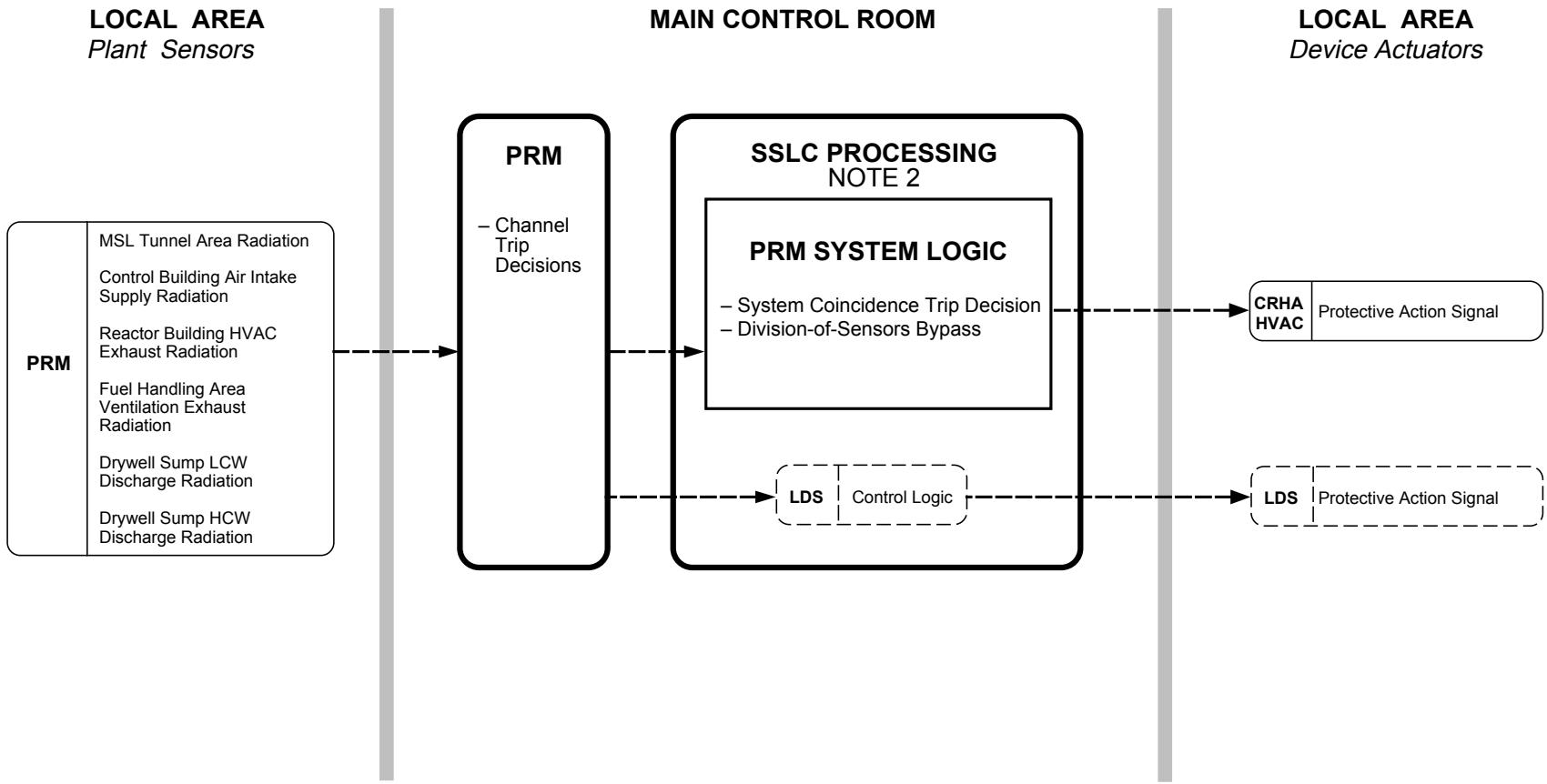

Notes:
1. Diagram represents one of four PRM System divisions.
2. See Section 3.4, Figure 3.4b for SSLC processing.

Figure 2.3.1 Process Radiation Monitoring System Control Interface Diagram

Table 2.3.1 Process Radiation Monitoring System

Inspections, Tests, Analyses and Acceptance Criteria		
Design Commitment	**Inspections, Tests, Analyses**	**Acceptance Criteria**
1. The equipment comprising the PRM System is defined in Section 2.3.1.	1. Inspection of the as-built system will be conducted.	1. The as-built PRM System conforms with the description in Section 2.3.1.
2. The MSL tunnel area is monitored for gamma radioactivity in the steam flow to the turbine. Protective action signals are automatically initiated when any two out of four channels trip.	2. Tests will be conducted using simulated signals to cause trip conditions.	2. Protective action signals are automatically initiated when any two out of four channels trip.
3. The air vent exhaust from the secondary containment is monitored for gamma radioactivity. Protective action signals are automatically initiated when any two out of four channels trip.	3. Tests will be conducted using simulated signals to cause trip conditions.	3. Protective action signals are automatically initiated when any two out of four channels trip.
4. The air vent exhaust from the fuel handling area is monitored for gamma radioactivity. Protective action signals are automatically initiated when any two out of four channels trip.	4. Tests will be conducted using simulated signals to cause trip conditions.	4. Protective action signals are automatically initiated when any two out of four channels trip.
5. The air supply intake to the Control Building is monitored for gamma radioactivity. Protective action signals are automatically initiated when any two out of four channels trip.	5. Tests will be conducted using simulated signals to cause trip conditions.	5. Protective action signals are automatically initiated when any two out of four channels trip.
6. The liquid waste discharged from each of the LCW and HCW drywell sumps to the Radwaste Building is monitored for gamma radioactivity. A protective action signal is automatically initiated when a channel trips.	6. Tests will be conducted on each drywell sump using a simulated signal to cause a trip condition.	6. A protective action signal is automatically initiated when a channel trips.

Table 2.3.1 Process Radiation Monitoring System (Continued)

Inspections, Tests, Analyses and Acceptance Criteria		
Design Commitment	**Inspections, Tests, Analyses**	**Acceptance Criteria**
7. The off-gas discharge from the charcoal vault to the stack is sampled and monitored for airborne radioactivity. Protective action signals are automatically initiated when both channels trip.	7. Tests will be conducted using simulated signals to cause trip conditions.	7. Protective action signals are generated when both channels trip.
8. The ventilation and the gaseous discharge from the plant stack is sampled and monitored for airborne radioactivity. An alarm is initiated when the detected radiation level exceeds the trip setpoint.	8. Tests will be conducted using simulated signals to cause trip conditions.	8. An alarm is initiated when the detected radiation level exceeds the trip setpoint.
9. The radwaste liquid discharged from the plant is sampled and monitored for gamma radioactivity. A protective action signal is automatically initiated when the channel trips.	9. Tests will be conducted using simulated signals to cause trip conditions.	9. A protective action signal is automatically initiated when the channel trips.
10. Reactor coolant leakage into the Reactor Building Cooling Water (RCW) System is monitored for gamma radioactivity. One channel is provided for each RCW division. An alarm is initiated when the detected radiation level exceeds the trip setpoint.	10. Tests will be conducted using simulated signals to cause trip conditions.	10. An alarm is initiated when the detected radiation level exceeds the trip setpoint.
11. The exhaust discharged from the turbine gland seal condenser is monitored for gamma radioactivity. An alarm is initiated when the detected radiation level exceeds the trip setpoint.	11. Tests will be conducted using simulated signals to cause trip conditions.	11. An alarm is initiated when the detected radiation level exceeds the trip setpoint.

Table 2.3.1 Process Radiation Monitoring System (Continued)

Inspections, Tests, Analyses and Acceptance Criteria		
Design Commitment	**Inspections, Tests, Analyses**	**Acceptance Criteria**
12. Each safety-related PRM System radiation monitoring channel is powered from its respective divisional Class 1E power source. In the PRM System, independence is provided between Class 1E divisions, and between Class 1E divisions and non-Class 1E equipment.	12. a. Tests will be performed on the PRM System by providing a test signal to only one Class 1E division at a time. b. Inspection of the as-built Class 1E divisions in the PRM System will be performed.	12. a. The test signal exists only in the Class 1E division under test in the PRM System. b. In the PRM System, physical separation or electrical isolation exists between Class 1E divisions. Physical separation or electrical isolation exists between these Class 1E divisions and non-Class 1E equipment.
13. Main control room alarms and displays provided for the PRM System are as defined in Section 2.3.1.	13. Inspection will be performed on the main control room PRM System alarms and displays.	13. Alarms and displays exist or can be retrieved in the main control room as defined in Section 2.3.1.

2.3.2 Area Radiation Monitoring System

Design Description

The Area Radiation Monitoring (ARM) System measures the gamma radiation levels at assigned locations within the plant, displays the measurements in the main control room, and activates alarms when the detected radiation levels exceed preset limits.

The ARM System is a multiple channel instrumentation system consisting of radiation monitors, their associated detectors, and local audible alarms. Each ARM channel monitors the radiation level in its assigned area, and initiates a main control room (MCR) alarm and a local alarm (if provided) when the radiation level exceeds a preset limit.

The ARM System is classified as non-safety-related.

The ARM System radiation sensors and the audible warning alarms are installed locally in the plant, while the radiation monitors are located in the Control Building.

The ARM System has the following alarms and displays in the MCR:

(1) Displays of radiation levels.

(2) Channel trip status.

(3) Alarms.

Inspections, Tests, Analyses and Acceptance Criteria

Table 2.3.2 provides a definition of the inspections, tests, and/or analyses, together with associated acceptance criteria, which will be undertaken for the Area Radiation Monitoring System.

Table 2.3.2 Area Radiation Monitoring System

Inspections, Tests, Analyses and Acceptance Criteria		
Design Commitment	**Inspections, Tests, Analyses**	**Acceptance Criteria**
1. The equipment comprising the ARM System is defined in Section 2.3.2.	1. Inspection of the as-built system will be conducted.	1. The as-built ARM System conforms with the description in Section 2.3.2.
2. Each ARM channel monitors radiation level in its assigned area, and initiates a MCR alarm and a local audible alarm (if provided) when the radiation level exceeds a preset limit.	2. Tests will be conducted using simulated signals for each channel.	2. The MCR alarm and local audible alarm (if provided) are initiated when the simulated radiation level exceeds a preset limit.
3. MCR alarms and displays provided for the ARM System are as defined in Section 2.3.2.	3. Inspections will be performed on the MCR alarms and displays for the ARM System.	3. Alarms and displays exist or can be retrieved in the MCR as defined in Section 2.3.2.

2.3.3 Containment Atmospheric Monitoring System

Design Description

The Containment Atmospheric Monitoring System (CAMS) is used for post-accident monitoring of the primary containment. The purpose of the CAMS is to:

(1) Provide information on combustible levels of oxygen and hydrogen in the primary containment.

(2) Detect and measure the radiation level within the primary containment during and following an accident.

(3) Detect and measure the hydrogen concentration within the primary containment during and following an accident.

The system monitors the atmospheric conditions in the drywell and in the suppression chamber for radiation levels and for hydrogen and oxygen gas concentration levels, displays the measurements in the main control room (MCR), and activates alarms in the MCR upon detection of high levels of radiation and/or gas concentrations.

The CAMS consists of two independent divisions and each division is composed of two radiation channels and oxygen/hydrogen gas monitoring equipment.

The CAMS is classified as a Class 1E safety-related system.

Operation of each CAMS division can be activated manually or automatically during a post-accident condition by a signal indicating a high drywell pressure or a low reactor water level.

One radiation channel of each CAMS division monitors the radiation level in the drywell and the other channel monitors the radiation level in the suppression chamber.

The oxygen/hydrogen monitoring equipment of each CAMS division analyzes the hydrogen and oxygen gas concentration levels in the drywell or in the suppression chamber and provides separate gas concentration displays in the MCR.

Each CAMS division is powered from its respective divisional Class 1E power source. In the CAMS, independence is provided between the Class 1E divisions, and also between the Class 1E divisions and non-Class 1E equipment.

Both CAMS divisions are located in the Reactor Building, except for the radiation and the gas process monitors, which are located in the Control Building.

The CAMS has the following alarms, displays, and controls in the MCR:

(1) Displays of radiation, hydrogen and oxygen levels.

(2) Alarms for radiation levels, and for hydrogen and oxygen gas concentration levels.

(3) Manual system level initiation for each CAMS division.

Inspections, Tests, Analyses and Acceptance Criteria

Table 2.3.3 provides a definition of the inspections, tests, and/or analyses, together with associated acceptance criteria, which will be undertaken for the Containment Atmospheric Monitoring System.

Table 2.3.3 Containment Atmospheric Monitoring System

Inspections, Tests, Analyses and Acceptance Criteria		
Design Commitment	**Inspections, Tests, Analyses**	**Acceptance Criteria**
1. The equipment comprising the CAMS is defined in Section 2.3.3.	1. Inspection of the as-built system will be conducted.	1. The as-built CAMS conforms with the description in Section 2.3.3.
2. Operation of each CAMS division can be activated manually by the operator or automatically.	2. Tests of each division of the as-built CAMS will be conducted using manual controls and simulated automatic initiation signals.	2. Each CAMS division is activated upon receipt of the test signals.
3. Each CAMS division is powered from its respective divisional Class 1E power source. In the CAMS, independence is provided between Class 1E divisions, and between Class 1E divisions and non-Class 1E equipment.	3. a. Tests will be performed on the CAMS by providing a test signal to only one Class 1E division at a time. b. Inspection of the as-built Class 1E divisions in the CAMs will be performed.	3. a. The test signal exists only in the Class 1E division under test in the CAMS. b. In the CAMS, physical separation or electrical isolation exists between Class 1E divisions. Physical separation or electrical isolation exists between these Class 1E divisions and non-Class 1E equipment.
4. Main control room alarms, displays and controls provided for the CAMS are as defined in Section 2.3.3.	4. Inspections will be performed on the main control room alarms, displays and controls for the CAMS.	4. Alarms, displays and controls exist or can be retrieved in the main control room as defined in Section 2.3.3.

2.4.1 Residual Heat Removal System

Design Description

The Residual Heat Removal (RHR) System has three separate divisions. The major functions of the RHR System are:

(1) Containment heat removal.

(2) Reactor decay heat removal.

(3) Emergency reactor vessel level makeup and

(4) Augmented fuel pool cooling.

Figures 2.4.1a, 2.4.1b, and 2.4.1c show the basic system configuration and scope. Figure 2.4.1d shows the RHR System control interfaces.

Except for the non-ASME Code components of the alternating current (AC) power source independent water addition feature (Figure 2.4.1c), the entire RHR System shown on Figures 2.4.1a, 2.4.1b, and 2.4.1c is classified as safety-related.

The RHR System operates in the following modes:

(1) Low pressure core flooder (LPFL) (Divisions A, B, and C)

(2) Suppression pool cooling (Divisions A, B, and C)

(3) Wetwell spray (Divisions B, and C)

(4) Drywell spray (Divisions B, and C)

(5) Shutdown cooling (Divisions A, B, and C)

(6) Augmented fuel pool cooling, and fuel pool makeup (Divisions B, and C)

(7) AC power source independent water addition (Division C)

(8) Full flow test (Divisions A, B, and C)

(9) Minimum flow bypass (Divisions A, B, and C)

Low Pressure Core Flooder Mode

As shown on Figure 2.4.1d, the RHR System channel measurements are provided to the Safety System Logic and Control (SSLC) for signal processing, setpoint comparisons, and generating trip signals. The RHR System is automatically initiated when either a high drywell pressure or low reactor water level condition exists (i.e., LOCA signal). A

RHR initiation signal is provided to the systems as identified on Figure 2.4.1d. The SSLC processors use a two-out-of-four voting logic for RHR System initiation. Each RHR division can also be initiated manually (LPFL mode).

Following receipt of an initiation signal, the RHR System automatically initiates and operates in the LPFL mode to provide emergency makeup to the reactor vessel. The initiation signal starts the pumps, which run in the minimum flow mode until the reactor depressurizes to less than the pump's developed head pressure. A low reactor pressure permissive signal occurs above the pump's developed head pressure, which signals the injection valve to open. As the injection valve opens, the reactor pressure is contained by the testable check valve until the reactor pressure becomes less than the pump's developed head pressure of the minimum flow mode, at which time injection flow begins. This sequence satisfies the response requirements for all potential LOCA pipe breaks when the injection valve opens within 36 seconds after receiving the low reactor pressure permissive signal. The LPFL injection flow for each division begins when the reactor vessel pressure is no less than 1.55 MPa above the drywell pressure. When the reactor vessel pressure is no less than 0.275 MPa greater than the drywell pressure, the LPFL injection flow for each division is 954 m^3/h minimum. The LPFL mode is accomplished by all three divisions of the RHR System by transferring water from the suppression pool to the reactor pressure vessel (RPV), via the RHR heat exchangers. The system automatically aligns to the LPFL mode of operation from the test mode, the suppression pool cooling, or wetwell spray modes upon receipt of an initiation signal. The wetwell spray mode is applicable for Divisions B or C. If a drywell spray valve is open in Division B or C, that RHR division automatically aligns to the LPFL mode in response to the injection valve beginning to open. The RPV injection valve in each division requires a low reactor pressure permissive signal to open, and closes automatically on receipt of a high reactor vessel pressure signal.

Suppression Pool Cooling Mode

The suppression pool cooling mode of the RHR System limits the long-term post-LOCA temperature of the suppression pool, and limits the long-term peak temperatures and pressures within the wetwell and drywell regions of the containment. In this mode, the RHR System circulates water through the RHR heat exchangers and returns it directly to the suppression pool. This mode is manually initiated by control of individual system components. In the suppression pool cooling mode, the total heat removal capacity between the RHR and ultimate heat sink is no less than 0.371 MJ/s·°C for each division. 0.371 MJ/s·°C is the limiting heat removal capacity of all the RHR modes. The heat removal path is the RHR heat exchanger, the Reactor Building Cooling Water (RCW) System, and the Reactor Service Water (RSW) System. In the suppression pool cooling mode, the RHR tube side heat exchanger (Hx) flow rate is 954 m^3/h minimum per division. The RHR pumps have sufficient net positive suction head (NPSH) available at the pump. Suction from the suppression pool is the limiting NPSH condition of all the RHR modes.

Containment Spray Mode

The containment spray mode of the RHR System is available in Divisions B and C, and consists of the wetwell spray and drywell spray operating together. In this mode, the RHR System pumps suppression pool water to a single wetwell spray header and single drywell spray header through the associated RHR heat exchanger. The containment spray mode of the RHR System is initiated manually by control of individual system components. The drywell spray inlet valves can only be opened if a high drywell pressure condition exists and if the injection valves are fully closed. The wetwell spray flow rate for either Division B or C is no less than 114 m^3/h.

Shutdown Cooling Mode

In the shutdown cooling mode of operation, the RHR System removes decay heat from the reactor core, and is used to achieve and maintain a cold shutdown condition by removing decay and sensible heat from the core and reactor vessel. This mode reduces reactor pressure and temperature to cold shutdown conditions. In this mode, each division takes suction from the RPV via its dedicated suction line, pumps the water through its respective heat exchanger tubes, and returns the cooled water to the RPV. Two divisions (B and C) discharge water back to the RPV via dedicated spargers, while the third division (A) utilizes the vessel spargers of one of the two feedwater lines (FW-A). Shutdown cooling is initiated manually once the RPV has been depressurized below the system low pressure permissive. In any division, the shutdown cooling suction valve cannot be opened unless the following valves in that division are closed:

(1) Suppression pool suction valve

(2) Suppression pool return valve

(3) Drywell spray valves

(4) Wetwell spray valve

Each shutdown cooling suction valve automatically closes on low reactor water level. The low pressure portions of the shutdown cooling piping are protected from high reactor pressure by automatic closure of the shutdown cooling suction valves on a high reactor vessel pressure. The shutdown cooling flow rate for any division is no less than 954 m^3/h.

Augmented Fuel Pool Cooling and Fuel Pool Makeup

The augmented fuel pool cooling mode of the RHR System (Divisions B and C) can supplement the Fuel Pool Cooling (FPC) System as follows: (1) directly cooling the fuel pool by circulation fuel pool water through the RHR heat exchanger and returning it to the fuel pool; and (2) while providing shutdown cooling during refueling operations, return the cooled RHR shutdown cooling flow to the fuel pool. Also, this mode provides for fuel pool emergency makeup capability by permitting the RHR pumps (Divisions B

and C) to transfer suppression pool water to the fuel pool. This mode is accomplished manually by control of individual system components. In the augmented fuel pool cooling mode, the RHR tube side heat exchanger flow rate for Division B or C is no less than 350 m^3/h.

AC Independent Water Addition Mode

Division C of the RHR System also functions in an AC independent water addition mode. This mode provides a means of injecting emergency makeup water to the reactor by cross connecting the Reactor Building Fire Protection (FP) System header, or alternately utilizing additional sources of water from an external connection just outside the Reactor Building. This makes it independent of the normal safety-related AC power distribution network. This mode is accomplished by manually opening two in-series valves on the cross-connection piping just upstream of the tie-in to the normal RHR piping. This is accomplished by local manual action at the valves. Fire Protection System water can be directed to either the RPV or the drywell spray sparger by local manual opening of the Division C RHR injection valve or the two Division C drywell spray valves. “Local manual” as used in this paragraph means manually operating the valves at the valves.

Full Flow Test Mode

Each division of the RHR System has a full flow test mode to permit pump flow testing during plant operation. In this mode, the system is essentially operated in the suppression pool cooling mode, drawing suction from and discharging back to the suppression pool.

Minimum Flow Bypass Mode

Each division of the RHR System has a minimum flow bypass mode that assures there is always flow in the RHR pumps when they are operating. This is accomplished by monitoring pump discharge flow, and opening a minimum flow valve to the suppression pool when flow falls below the minimum value. The minimum flow valve closes when the pump flow exceeds the minimum value. Minimum flow bypass operation is automatic based on a flow signal opening the minimum flow valve when the flow is low, with a concurrent high pump discharge pressure signal.

Other Provisions

The RHR System is classified as Seismic Category I. Figures 2.4.1a, 2.4.1b, and 2.4.1c show the ASME Code Class for the RHR System. The RHR System is located in the Reactor Building.

Each of the three divisions is powered from the Class 1E division as shown on Figures 2.4.1a, 2.4.1b, 2.4.1c. In the RHR System, independence is provided between Class 1E divisions, and also between the Class 1E divisions and non-Class 1E equipment.

Outside the primary containment, each mechanical division of the RHR System (Divisions A, B, and C) is physically separated from the other divisions.

The RHR System has the following displays and controls in the main control room:

(1) Parameter displays for the instruments shown on Figures 2.4.1a, 2.4.1b, and 2.4.1c.

(2) Controls and status indication for the active safety-related components shown on Figures 2.4.1a, 2.4.1b, and 2.4.1c.

(3) Manual system level initiation capability for the following modes:

(a) LPFL initiation

(b) Standby

(c) Shutdown cooling

(d) Suppression pool cooling

(e) Drywell spray

RHR System components with displays and control interfaces with the Remote Shutdown System (RSS) are shown on Figures 2.4.1a and 2.4.1b.

The safety-related electrical equipment shown on Figures 2.4.1a, 2.4.1b, and 2.4.1c located inside the primary containment and the Reactor Building is qualified for a harsh environment.

The motor-operated valves shown on Figures 2.4.1a, 2.4.1b, and 2.4.1c have active safety-related functions and perform these functions to open, close, or both open and close, under differential pressure, fluid flow, and temperature conditions.

The check valves (CVs) shown on Figures 2.4.1a, 2.4.1b, and 2.4.1c have safety-related functions to open, close, or both open and close under system pressure, fluid flow, and temperature conditions.

The RHR System main pumps are interlocked to prevent starting with a closed suction path.

Each RHR loop has a continuously running jockey pump to maintain the system piping continuously filled with water. The jocky pump is stopped by a RHR initiation signal or may be stopped or started manually.

The piping and components outside the shutdown cooling suction line containment isolation valves and outside the suppression pool containment isolation valves, and upstream of the suction side of the pump with all its branches have a design pressure of

2.82 MPaG for intersystem LOCA (ISLOCA) conditions. Refer to Figures 2.4.1a, 2.4.1b, and 2.4.1c. For RHR-A, the upgraded branch lines from the main pump suction include the path to and including the suppression pool suction valve, the path to the shutdown cooling outboard containment isolation valve, and the path to the jockey pump's discharge check valve including the jockey pump's bypass return line. For RHR-B and C, the upgraded branch lines include all the paths listed for RHR-A plus the path to (and including the valve) the Fuel Pool Cooling System that branches off the shutdown cooling suction line, titled "From FPC." For RHR-C, the upgraded branch lines include all the paths listed for RHR-A and B plus the pipeline and valves that are part of the AC independent water addition mode that extends from the noncode boundary indicated by "NNS" to the "external connection" outside the "reactor building" and to the Fire Protection System interface indicated by "FP".

Inspections, Tests, Analyses and Acceptance Criteria

Table 2.4.1 provides a definition of the inspections, test and/or analyses, together with associated acceptance criteria, which will be undertaken for the RHR System.

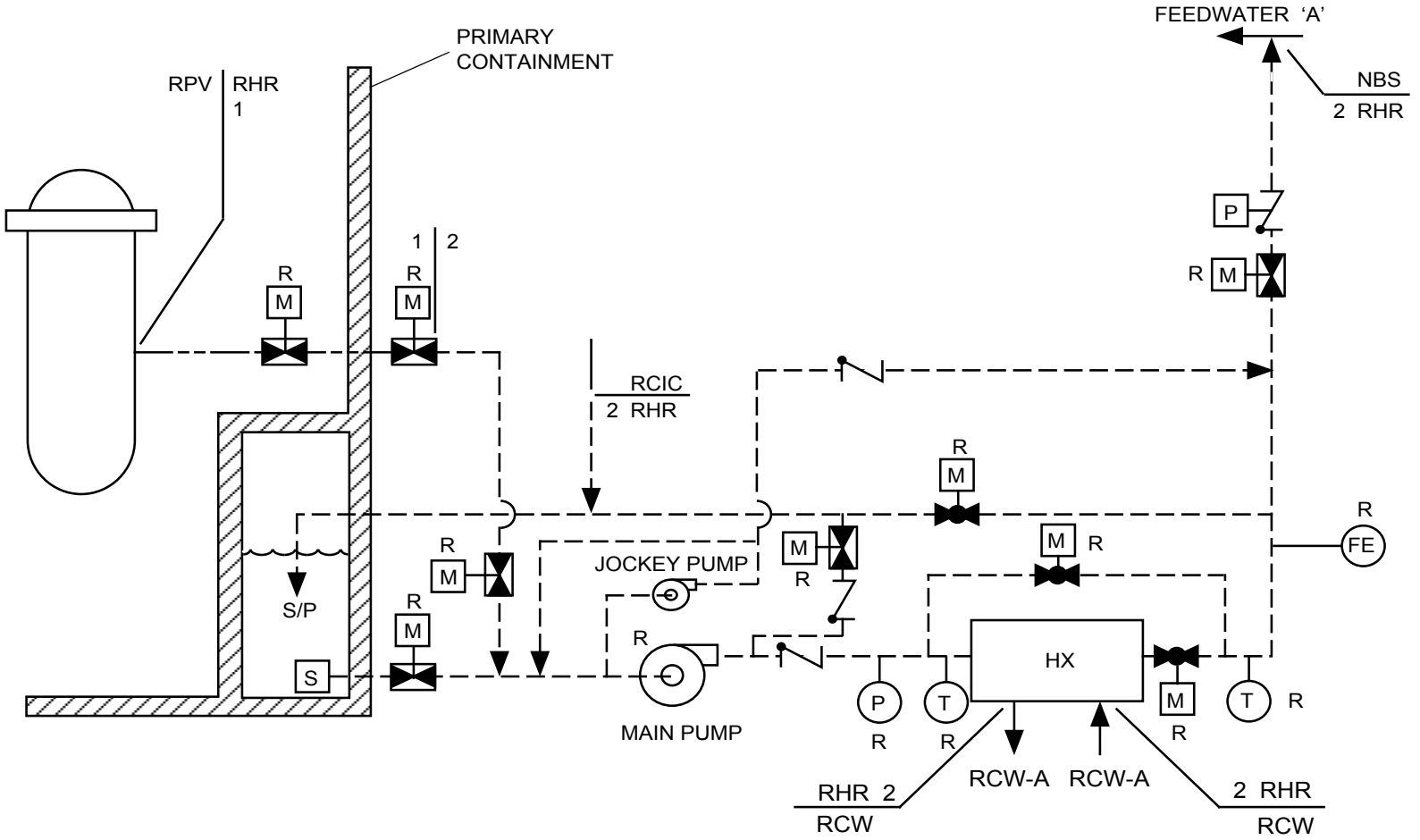

NOTES:
1. ALL ELECTRICAL POWER LOADS FOR THE CLASS 1E COMPONENTS SHOWN ON THIS FIGURE ARE POWERED FROM CLASS 1E DIVISION I EXCEPT FOR THE OUTBOARD CONTAINMENT ISOLATION VALVE OF THE SHUTDOWN COOLING SUCTION LINE, WHICH IS DIVISION II.

Figure 2.4.1a Residual Heat Removal System (RHR-A)

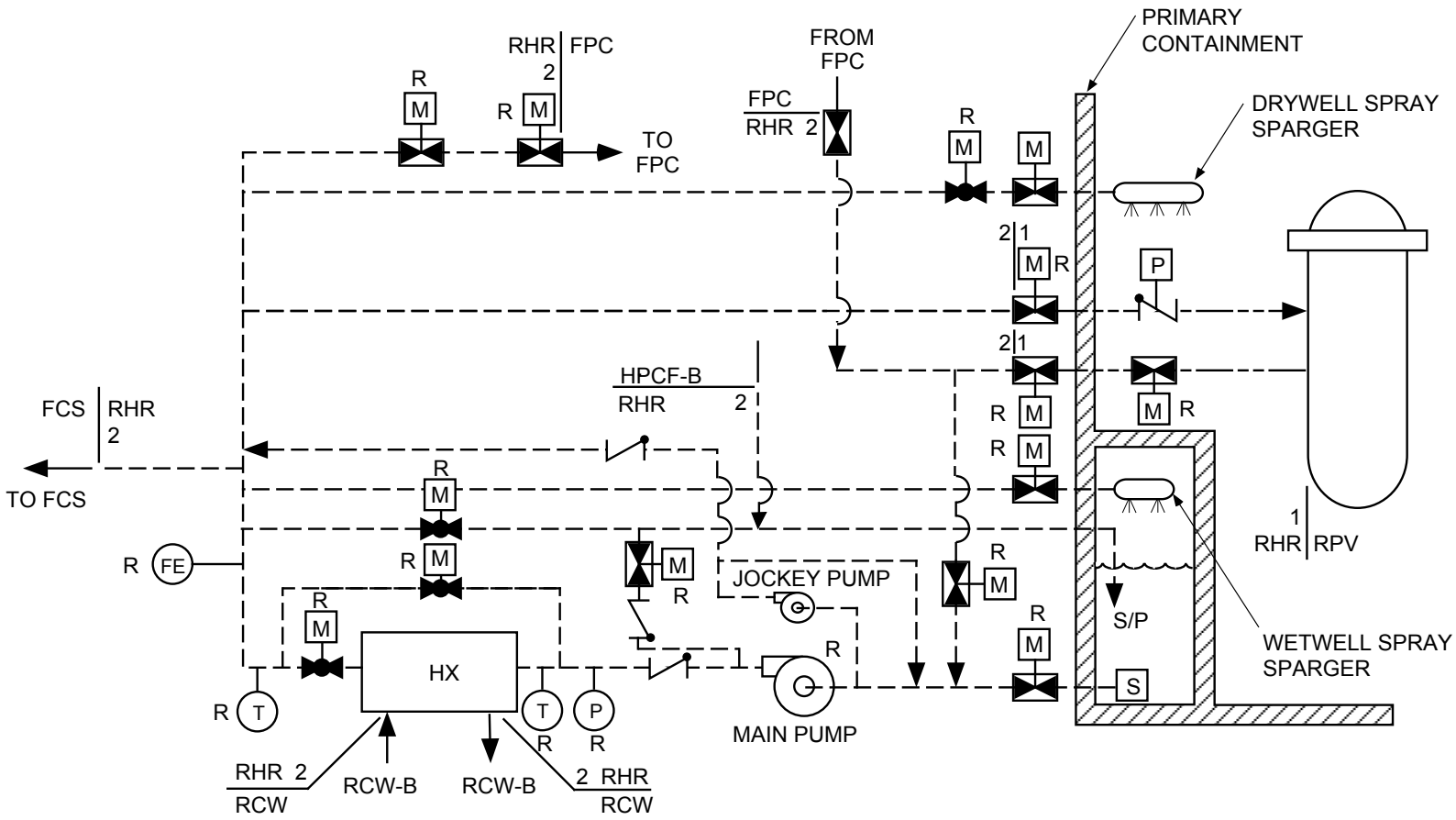

NOTES:
1. ALL ELECTRICAL POWER LOADS FOR THE CLASS 1E COMPONENTS SHOWN ON THIS FIGURE ARE POWERED FROM CLASS 1E DIVISION II EXCEPT FOR THE OUTBOARD CONTAINMENT ISOLATION VALVE OF THE SHUTDOWN COOLING SUCTION LINE, WHICH IS DIVISION III.
2. DRYWELL AND WETWELL SPRAY SPARGERS ARE COMMON TO DIVISIONS B AND C.

Figure 2.4.1b Residual Heat Removal System (RHR-B)

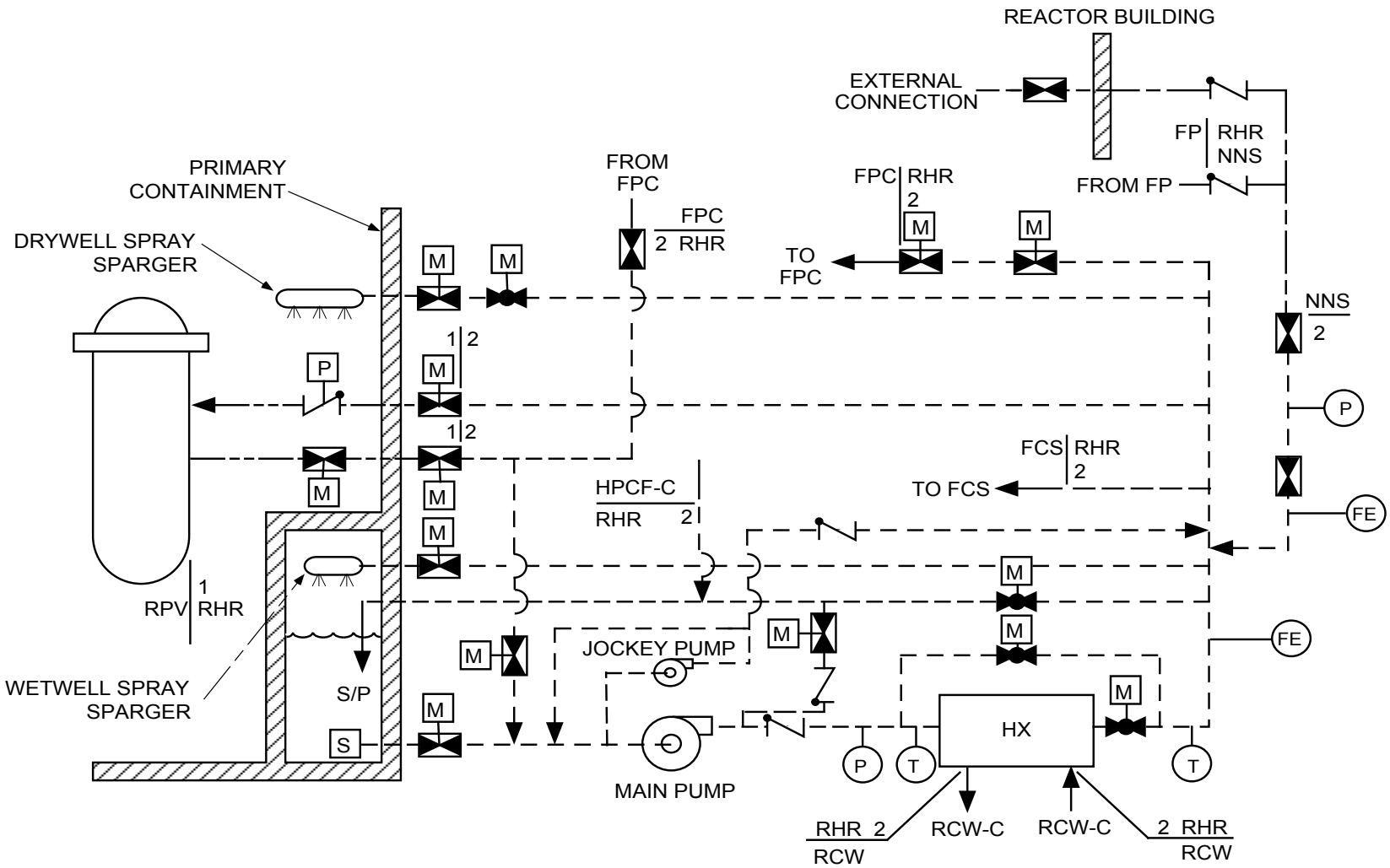

NOTES:
1. ALL ELECTRICAL POWER LOADS FOR THE CLASS 1E COMPONENTS SHOWN ON THIS FIGURE ARE POWERED FROM CLASS 1E DIVISION III EXCEPT FOR THE OUTBOARD CONTAINMENT ISOLATION VALVE OF THE SHUTDOWN COOLING SUCTION LINE, WHICH IS DIVISION I.
2. DRYWELL AND WETWELL SPRAY SPRAGERS ARE COMMON TO DIVISIONS B AND C.

Figure 2.4.1c Residual Heat Removal System (RHR-C)

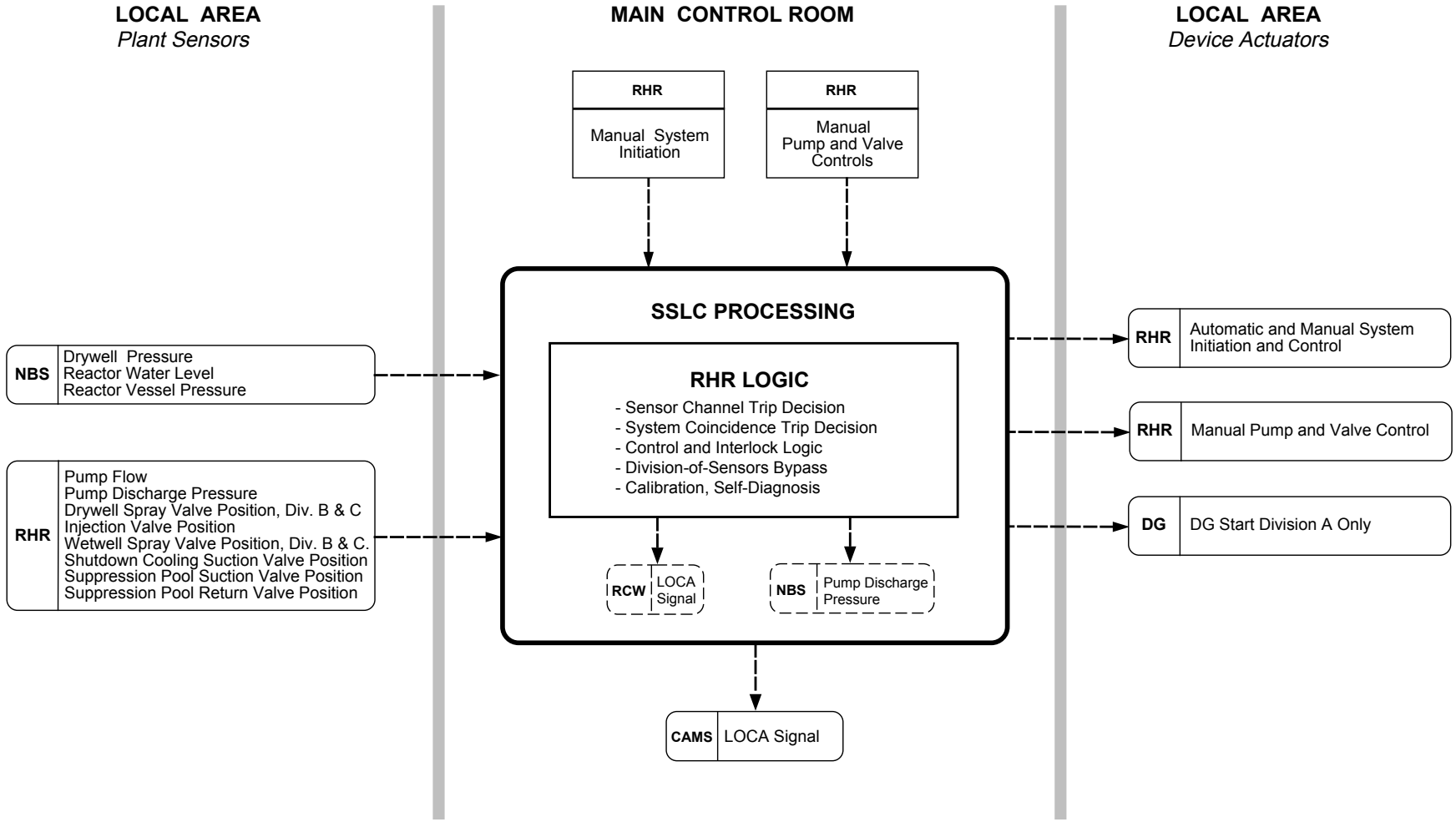

Notes:
1. Diagram represents one of three RHR divisions, except as noted.
2. See Section 3.4, Figure 3.4b for SSLC Processing.

Figure 2.4.1d Residual Heat Removal System Control Interface Diagram

Table 2.4.1 Residual Heat Removal System

Inspections, Tests, Analyses and Acceptance Criteria		
Design Commitment	**Inspections, Tests, Analyses**	**Acceptance Criteria**
1. The basic configuration of the RHR System is shown in Figures 2.4.1a, 2.4.1b, 2.4.1c, and 2.4.1d.	1. Inspections of the as-built system will be conducted.	1. The as-built RHR System conforms with the basic configuration shown in Figures 2.4.1a, 2.4.1b, 2.4.1c, and 2.4.1d.
2. The ASME Code components of the RHR System retain their pressure boundary integrity under internal pressures that will be experienced during service.	2. A hydrostatic test will be conducted on those Code components of the RHR System that are required to be hydrostatically tested by the ASME Code.	2. The results of the hydrostatic test of the ASME Code components of the RHR System conform with the requirements in the ASME Code, Section III.
3.	3.	3.
a. The RHR System is automatically initiated in the LPFL mode when either a high drywell pressure or a low reactor water level condition exists.	a. Tests will be conducted using simulated input signals for each process variable to cause trip conditions in two, three, and four instrument channels of the same process variable.	a. Each division of the RHR System receives an initiation signal.
b. Each RHR division can be initiated manually (LPFL mode).	b. Tests will be conducted by initiating each division manually.	b. Each division of the RHR System receives an initiation signal.

Table 2.4.1 Residual Heat Removal System (Continued)

Inspections, Tests, Analyses and Acceptance Criteria		
Design Commitment	**Inspections, Tests, Analyses**	**Acceptance Criteria**
3. continued c. Following receipt of an initiation signal, the RHR System automatically initiates and operates in the LPFL mode to provide emergency makeup to the reactor vessel.	3. continued c. Tests will be conducted on each RHR division using a simulated initiation signal and a simulated low reactor pressure permissive signal.	3. continued c. Upon receipt of a simulated initiation signal, the following occurs: (1) The RHR pump receives a signal to start. (2) The RPV injection valve receives a signal to open provided a low reactor pressure permissive signal is present, and the valve opens within 36 seconds after receiving the low reactor pressure permissive signal. (3) The suppression pool return valve receives a signal to close. (4) The wetwell spray valve receives a signal to close (Divisions B and C only).
d. The LPFL injection flow for each division begins when the RPV dome pressure is no less than 1.55 MPa above the drywell pressure. When the RPV dome pressure is no less than 0.275 MPa greater than the drywell pressure, the LPFL injection flow for each division is 954 m^3/h minimum.	d. Tests will be conducted on the as-built RHR System in the RHR LPFL mode. Analyses will be performed to convert the test results to the conditions of the Design Commitment.	d. The converted RHR flow satisfies the following: The LPFL injection flow for each division begins when the RPV dome pressure is no less than 1.55 MPa above the drywell pressure. When the RPV dome pressure is no less than 0.275 MPa greater than the drywell pressure, the LPFL injection flow for each division is 954 m^3/h minimum.

Table 2.4.1 Residual Heat Removal System (Continued)

Inspections, Tests, Analyses and Acceptance Criteria		
Design Commitment	**Inspections, Tests, Analyses**	**Acceptance Criteria**
3. continued	3. continued	3. continued
e. The system automatically aligns to the LPFL mode of operation from the test mode, the suppression pool cooling or wetwell spray modes upon receipt of an initiation signal.	e. Tests will be conducted on each RHR division using simulated LPFL initiation signals.	e. Each division automatically aligns to the LPFL mode of operation from the test mode, the suppression pool cooling or wetwell spray modes upon receiving an initiation signal. The wetwell spray mode is applicable for Divisions B or C.
f. If a drywell spray valve is open in Division B or C, that RHR division automatically reverts to the LPFL mode in response to the injection valve beginning to open.	f. Tests will be conducted on RHR Division B and C drywell spray mode using a simulated injection valve opening signal.	f. Drywell spray valves in a division close on receipt of injection valve not fully closed signal in that division.
g. The RPV injection valve in each division requires a low reactor vessel pressure permissive signal to open and closes automatically on receipt of a high reactor vessel pressure signal.	g. Tests will be conducted on the injection valves in each RHR division using a simulated reactor vessel pressure signal.	g. The RPV injection valve in each division requires a low reactor vessel pressure permissive signal to open and closes automatically on receipt of a high reactor vessel pressure signal.
4.	4.	4.
a. In the suppression pool cooling mode, the total heat removal capacity requirement between the RHR System and ultimate heat sink is no less than 0.371 MJ/s·°C for each division.	a. Inspections and analyses will be performed to determine the heat exchanger's effective heat removal capacity, for each division.	a. In the suppression pool cooling mode, the total heat removal capacity requirements between the RHR System and ultimate heat sink is no less than 0.371 MJ/s·°C for each division.
b. In the suppression pool cooling mode, the RHR tube side heat exchanger flow rate is 954 m^3/h minimum, per division.	b. Tests will be performed on each RHR division.	b. In the suppression pool cooling mode, the RHR tube side heat exchanger flow rate is 954 m^3/h minimum, per division.

Table 2.4.1 Residual Heat Removal System (Continued)

Inspections, Tests, Analyses and Acceptance Criteria		
Design Commitment	**Inspections, Tests, Analyses**	**Acceptance Criteria**
4. continued c. The RHR pumps have sufficient NPSH.	4. continued c. Inspections, tests and analyses will be performed upon the as -built RHR System. NPSH tests of the pumps will be performed in a test facility. The analyses will consider the effects of: – Pressure losses for pump inlet piping and components. – Suction from the suppression pool with water level at the minimum value. – 5O% blockage of pump suction strainers. – Design basis fluid temperature (100°C). – Containment at atmospheric pressure.	4. continued c. The available NPSH exceeds the NPSH required by the pumps.

Table 2.4.1 Residual Heat Removal System (Continued)

Inspections, Tests, Analyses and Acceptance Criteria		
Design Commitment	**Inspections, Tests, Analyses**	**Acceptance Criteria**
5.	5.	5.
a. The drywell spray inlet valves can only be opened if a high drywell pressure exists and if the injection valves are fully closed.	a. Tests will be performed of the drywell spray valve interlock logic using simulated drywell pressure and valve position signals.	a. The two in-series drywell spray valves are blocked from being open simultaneously unless signals indicative of the following conditions exist concurrently: (1) Drywell pressure is high. (2) The RPV injection valve is fully closed. (3) The shutdown cooling suction valve is fully closed. The drywell spray valves will automatically close if signals indicative of the following condition exists: (1) The RPV injection valve is not fully closed.
b. The wetwell spray flow rate for either Division B or C is no less than 114 m^3/h.	b. Tests will be conducted on Divisions B and C in the wetwell spray mode.	b. RHR Division B provides wetwell spray flow greater than or equal to 114 m^3/h. RHR Division C provides wetwell spray flow greater than or equal to 114 m^3/h.

Table 2.4.1 Residual Heat Removal System (Continued)

Inspections, Tests, Analyses and Acceptance Criteria		
Design Commitment	**Inspections, Tests, Analyses**	**Acceptance Criteria**
6.	6.	6.
a. Shutdown cooling is initiated manually once the RPV has been depressurized below the system low pressure permissive.	a. Tests will be conducted on the RHR shutdown cooling mode for manual initiation, using simulated reactor vessel pressure signals.	a. The RHR shutdown mode operates when reactor vessel pressure is below system low pressure permissive. The RHR shutdown mode is not manually initiated when reactor vessel pressure is not less than the low pressure permissive.
b. In any division, the shutdown cooling suction valve cannot be opened unless the following valves in that division are closed: Suppression pool suction valve. Suppression pool return valve. Drywell spray valves. Wetwell spray valve.	b. Tests will be conducted on each RHR division to open the shutdown cooling suction valve.	b. In any division, the shutdown cooling suction valve cannot be opened unless the following valves in that division are closed: Suppression pool suction valve. Suppression pool return valve. Drywell spray valves. Wetwell spray valve.
c. Each shutdown cooling suction valve automatically closes on low reactor water level.	c. Tests will be conducted on each RHR division using a simulated reactor water level signal.	c. Each shutdown cooling suction valve automatically closes on low reactor water level.
d. The low pressure portions of the shutdown cooling piping are protected from high reactor pressure by automatic closure of the shutdown cooling suction valves on a high reactor vessel pressure signal.	d. Tests will be conducted on the shutdown cooling suction valves in each RHR division using a simulated reactor vessel pressure signal.	d. The shutdown cooling suction valves close when the RHR System receives a simulated high reactor vessel pressure signal.

Table 2.4.1 Residual Heat Removal System (Continued)

Inspections, Tests, Analyses and Acceptance Criteria		
Design Commitment	**Inspections, Tests, Analyses**	**Acceptance Criteria**
6. continued e. In the shutdown cooling mode, the RHR tube side heat exchanger flow rate is greater than or equal to 954 m^3/h.	6. continued e. In the shutdown cooling mode, system functional tests will be performed to determine system flow rate through each heat exchanger. Inspections and analyses shall be performed to verify that the shutdown cooling mode is bounded by suppression pool cooling requirements.	6. continued e. The RHR heat exchangers tube side flow rate is greater than or equal to 954 m^3/h. Heat exchanger removal capacity in this mode is bounded by suppression pool cooling requirements.
7. In the augmented fuel pool cooling mode, the RHR tube side heat exchanger flow rate for Divisions B or C is no less than 350 m^3/h (heat exchanger heat removal capacity in this mode is bounded by suppression pool cooling requirements).	7. Tests will be performed to determine system flow rate through each heat exchanger in the augmented fuel pool cooling mode. Inspections and analyses shall be performed to verify that the augmented fuel pool cooling mode is bounded by suppression pool cooling requirements.	7. The RHR tube side heat exchanger flow rate is greater than or equal to 350 m^3/h in the augmented fuel pool cooling mode. Heat exchanger heat removal capacity in this mode is bounded by suppression pool cooling requirements.
8. a. Each division of the RHR has a minimum flow bypass mode that assures there is always flow in the RHR pumps when they are operating.	8. a. Tests will be conducted on the pump minimum flow valve interlock logic using simulated pressure and flow signals.	8. a. The pump minimum flow valve receives a signal to open when signals indicative of the following conditions exist concurrently: (1) Pump discharge pressure is high when the pump starts. (2) Pump flow is low. The pump minimum flow valve receives a signal to close when a signal indicative of the following condition exists: (1) Pump flow exceeds minimum value.

Table 2.4.1 Residual Heat Removal System (Continued)

Inspections, Tests, Analyses and Acceptance Criteria		
Design Commitment	**Inspections, Tests, Analyses**	**Acceptance Criteria**
8. continued b. Each division of the RHR System has a minimum flow bypass mode that assures there is always flow in the RHR pumps when they are operating.	8. continued b. Tests and analyses will b e conducted on each division of the RHR System in the minimum flow mode. The tests will quantify pump flow and compare with pump required minimum flow.	8. continued b. The available minimum flow exceeds the required minimum flow.
9. Each of the three RHR divisions is powered from the Class 1E division as shown on Figures 2.4.1a, 2.4.1b and 2.4.1c. In the RHR System, independence is provided between Class 1E divisions, and between Class 1E divisions and non-Class 1E equipment.	9. a. Tests will be performed on the RHR System by providing a test signal to only one Class 1E division at a time.	9. a. The test signal exists only in the Class 1E division under test in the RHR System.
	b. Inspection of the as-installed Class 1E divisions in the RHR System will be performed.	b. In the RHR System, physical separation or electrical isolation exists between Class 1E divisions. Physical separation or electrical isolation exists between these Class 1E divisions and non-Class 1E equipment.
10. Each mechanical division of the RHR System (Divisions A, B, C) is physically separated from the other divisions.	10. Inspections of the as-built RHR System will be performed.	10. Each mechanical division of the RHR System is physically separated from other mechanical divisions of RHR System by structural and/or fire barriers with the exception of components inside primary containment.
11. Main control room displays and controls provided for RHR System are defined in Section 2.4.1.	11. Inspections will be performed on the main control room displays and controls for the RHR System.	11. Displays and controls exist or can be retrieved in the main control room as defined in Section 2.4.1.
12. RSS displays and controls provided for the RHR System are as defined in Section 2.4.1.	12. Inspections will be performed on the RSS displays and controls for the RHR System.	12. Displays and controls exist on the RSS as defined in Section 2.4.1.

Table 2.4.1 Residual Heat Removal System (Continued)

Inspections, Tests, Analyses and Acceptance Criteria		
Design Commitment	**Inspections, Tests, Analyses**	**Acceptance Criteria**
13.	13.	13.
a. MOVs designated in Section 2.4.1 as having an active safety function open, close, or both open and close under differential pressure, fluid flow, and temperature conditions.	a. Tests of installed valves for opening, closing or both opening and closing, will be conducted under preoperational differential pressure, fluid flow, and temperature conditions.	a. Upon receipt of the actuating signal, each MOV opens, closes, or both opens and closes, depending upon the valve's safety functions.
b. Check valves (CVs) designated in Section 2.4.1 as having an active safety-related function open, close, or both open and close, under system pressure, fluid flow, and temperature conditions.	b. Tests of installed valves for opening, closing, or both opening and closing, will be conducted under system preoperational pressure, fluid flow, and temperature conditions.	b. Based on the direction of the differential pressure across the valve, each CV opens, closes, or both opens and closes, depending upon the valve's safety functions.
14. The RHR System main pumps are interlocked to prevent starting with a closed suction path.	14. Tests will be conducted on the RHR pump start logic using simulated valve position signals.	14. Each RHR System pump is prevented from starting unless signals indicative of one of the following conditions exists: a. A suction path from the suppression pool is available. (The suppression pool suction valve is fully open.) b. A suction path from the RPV via the shutdown cooling suction line is available. (The shutdown cooling suction valve and inboard and outboard isolation valves are all fully open.)

2.4.2 High Pressure Core Flooder System

Design Description

The High Pressure Core Flooder (HPCF) System is comprised of two separate divisions. The function of the HPCF System is to provide emergency makeup water to the reactor vessel for transient or loss-of-coolant accident (LOCA) events. Each HPCF division consists of a pump, piping, valves and controls and can utilize either of two water sources, the condensate storage tank (CST) or the suppression pool (S/P). The primary source of suction water supply is from the CST. The S/P water is the secondary source of supply. Figure 2.4.2a shows the basic system configuration and scope. Figure 2.4.2b shows the HPCF System control interfaces.

The HPCF System is classified as safety-related.

The HPCF System operates in the following modes:

(1) High pressure flooder.

(2) Full flow test.

(3) Minimum flow bypass.

High Pressure Flooder Mode

As shown on Figure 2.4.2b, the HPCF System channel measurements are provided to the Safety System Logic and Control (SSLC) for signal processing, setpoint comparisons, and generating trip signals. The HPCF System is automatically initiated in the high pressure flooder mode when either a high drywell pressure signal or low reactor water level signal exists. Both divisions of the HPCF System are actuated at a reactor water level below the RCIC actuation level. The SSLC System processors use a two-out-of-four voting logic for system initiation and shutdown. Manual HPCF System initiation can also be performed.

Following receipt of an initiation signal, the HPCF System automatically initiates and operates in the high pressure flooder mode to provide water to the core region of the reactor. The pumps are motor-driven centrifugal pumps that provide flow as a function of reactor vessel pressure. The flow in each division is not less than a value corresponding to a straight line between a flow of 182 m^3/h at a differential pressure of 8.12 MPa and a flow of 727 m^3/h at a differential pressure of 0.69 MPa. The HPCF System has the capability to deliver at least 50% of these flow rates with 171°C water at the pump suction. The differential pressure values represent the difference between the reactor vessel pressure and the pressure of the air space of the source water for the pump. System flow into the reactor vessel is achieved within 16 seconds of receipt of an initiation signal and power available at the emergency busses.

The HPCF pumps have sufficient net positive suction head (NPSH) available at the pumps.

During this mode, pump suction is from the CST. Automatic transfer of pump suction from the CST to the S/P occurs when a low CST water level or high suppression pool water level signal exists. The CST and suppression pool water level signals are processed through the SSLC two-out-of-four voting logic to initiate suction transfer.

When a high water level signal in the reactor pressure vessel exists, the reactor vessel injection valve is automatically closed. When the low reactor water level initiation signal recurs, the injection valve automatically re-opens to reestablish HPCF flow.

Full Flow Test Mode

Each division of the HPCF System has a full flow test mode to permit testing during plant operation. In this mode, water is taken from the suppression pool and returned to the suppression pool via the test return line. The injection valve is kept closed to prevent any vessel injection during the test.

If a system initiation signal occurs during the full flow test mode, each division of the HPCF System automatically aligns to the high pressure flooder mode.

Minimum Flow Bypass Mode

Each division of the HPCF System has a minimum flow bypass mode that assures there is always flow in the HPCF pumps when they are operating. This is accomplished automatically by monitoring pump discharge flow, and opening a minimum flow valve to the suppression pool when flow falls below the minimum value. The minimum flow valve closes when the pump flow exceeds the minimum value. Minimum flow bypass operation is automatic based on a flow signal opening the minimum flow valve when the flow is low, with a concurrent high pump discharge pressure signal.

Other Provisions

The HPCF System is classified as Seismic Category I. Figure 2.4.2a shows the ASME Code Class for the HPCF System. The HPCF System is located both inside the primary containment and within the Reactor Building.

Each of the two HPCF divisions is powered from the respective Class 1E division as shown on Figure 2.4.2a. In the HPCF System, independence is provided between Class 1E divisions, and also between Class 1E divisions and non-Class 1E equipment.

Outside the primary containment, except for piping from the CST, each mechanical division of the HPCF System (Divisions B and C) is physically separated from the other division. Outside the primary containment, except for piping from the CST, both HPCF divisions are physically separated from the Reactor Core Isolation Cooling (RCIC) System.

The HPCF System has the following displays and controls in the main control room:

(1) Parameter displays for the instruments shown on Figure 2.4.2a.

(2) Controls and status indication for the active safety-related components shown on Figure 2.4.2a.

(3) Manual system level initiation capability for the high pressure flooder mode.

HPCF System components with displays and control interfaces with the Remote Shutdown System (RSS) are shown on Figure 2.4.2a

The safety-related electrical equipment shown on Figure 2.4.2a located inside the primary containment and in the Reactor Building is qualified for a harsh environment.

The motor-operated valves (MOVs) shown on Figure 2.4.2a have active safety-related functions to open, close, or both open and close, and perform these functions under differential pressure, fluid flow, and temperature conditions.

The check valves (CVs) shown on Figure 2.4.2a have safety-related functions to open, close, or both open and close under system pressure, fluid flow, and temperature conditions.

The HPCF System pumps have interlocks which prevent operation if both suction valves are closed.

The HPCF System suction piping and components from the pump suction valves to the pump inlet have a design pressure of 2.82 MPaG for intersystem LOCA (ISLOCA) conditions.

Inspections, Tests, Analyses and Acceptance Criteria

Table 2.4.2 provides a definition of the inspections, test and/or analyses, together with associated acceptance criteria, which will be undertaken for the HPCF System.

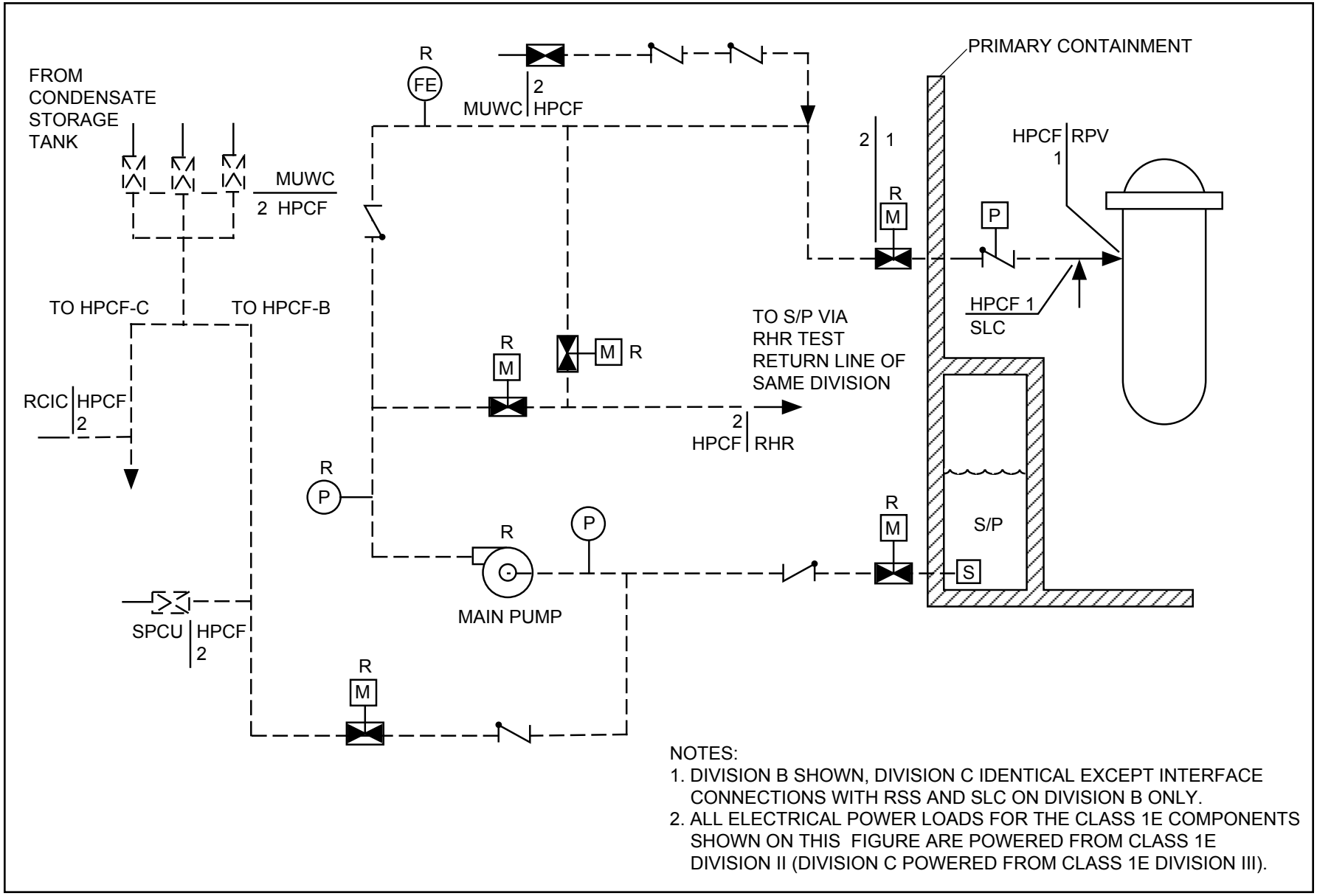

NOTES:
1. DIVISION B SHOWN, DIVISION C IDENTICAL EXCEPT INTERFACE CONNECTIONS WITH RSS AND SLC ON DIVISION B ONLY.
2. ALL ELECTRICAL POWER LOADS FOR THE CLASS 1E COMPONENTS SHOWN ON THIS FIGURE ARE POWERED FROM CLASS 1E DIVISION II (DIVISION C POWERED FROM CLASS 1E DIVISION III).

Figure 2.4.2a High Pressure Core Flooder System

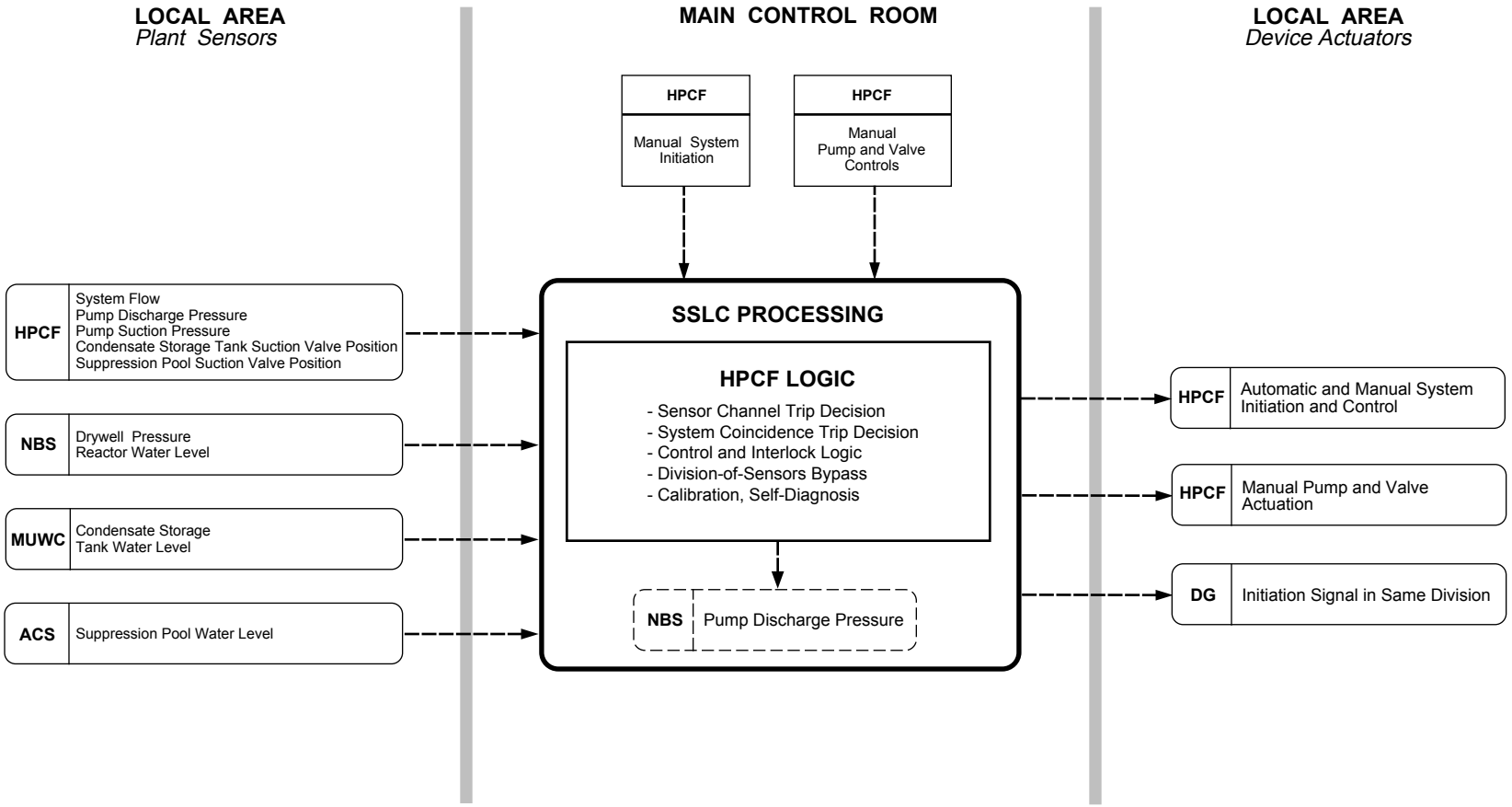

Notes:
1. Diagram represents one of two HPCF divisions.
2. See Section 3.4, Figure 3.4b for SSLC Processing.
3. HPCF Division C has manual initiation and monitoring capability which is diverse from SSLC (see Section 3.4).

Figure 2.4.2b High Pressure Core Flooder System Control Interface Diagram

Table 2.4.2 High Pressure Core Flooder System

Inspections, Tests, Analyses and Acceptance Criteria		
Design Commitment	**Inspections, Tests, Analyses**	**Acceptance Criteria**
1. The basic configuration of the HPCF System is as shown on Figures 2.4.2a and 2.4.2b.	1. Inspections of the as-built system will be conducted.	1. The as-built HPCF System conforms with the basic configuration shown on Figures 2.4.2a and 2.4.2b.
2. The ASME Code components of the HPCF System retain their pressure boundary integrity under internal pressures that will be experienced during service.	2. A hydrostatic test will be conducted on those Code components of the HPCF System required to be hydrostatically tested by the ASME Code.	2. The results of the hydrostatic test of the ASME Code components of the HPCF System conform with the requirements in the ASME Code, Section III.
3.	3.	3.
a. The HPCF System is automatically initiated in the high pressure flooder mode when either a high drywell pressure signal or a low reactor water level signal exists.	a. Tests will be conducted using simulated input signals for each process variable to cause trip conditions in two, three, and four instrument channels of the same process variable.	a. Each division of the HPCF System receives an initiation signal.
b. Manual HPCF System initiation can be performed in the high pressure flooder mode.	b. Tests will be conducted by manually initiating each HPCF division.	b. Each division of the HPCF System receives an initiation signal.
c. Following receipt of an initiation signal, the HPCF System automatically initiates and operates in the high pressure flooder mode to provide water to the core region of the reactor.	c. Tests will be conducted on each HPCF division using a simulated initiation signal.	c. Upon receipt of a simulated initiation signal, the following occurs: – The HPCF pump receives a signal to start. – The RPV injection valve receives a signal to open. – The condensate storage tank suction valve receives a signal to open. – The test line return valve receives a signal to close.

Table 2.4.2 High Pressure Core Flooder System (Continued)

Inspections, Tests, Analyses and Acceptance Criteria		
Design Commitment	**Inspections, Tests, Analyses**	**Acceptance Criteria**
d. The HPCF System flow in each division is not less than a value corresponding to a straight line between a flow of 182 m^3/h at a differential pressure of 8.12 MPa and a flow of 727 m^3/h at a differential pressure of 0.69 MPa.	d. Tests will be conducted on each division of the as-built HPCF System in the HPCF high pressure flooder mode. Analyses will be performed to convert the test results to the conditions of the Design Commitment.	d. The converted HPCF flow satisfies the following: The HPCF System flow in each division is not less than a value corresponding to a straight line between a flow of 182 m^3/h at a differential pressure of 8.12 MPa and a flow of 727 m^3/h at a differential pressure of 0.69 MPa.
e. The HPCF System has the capability to deliver at least 50% of the flow rates in item 3d with 171°C water at the pump suction.	e. Analyses will be performed of the as-built HPCF System to assess the system flow capability with 171°C water at the pump suction.	e. The HPCF System has the capability to deliver at least 50% of the flow rates in item 3d with 171°C water at the pump suction.
f. System flow into the reactor vessel is achieved within 16 seconds of receipt of an initiation signal and power available at the emergency busses.	f. Tests will be conducted on each HPCF division using simulated initiation signals.	f. The HPCF System flow is achieved within 16 seconds of receipt of a simulated initiation signal.
g. The HPCF pumps have sufficient NPSH available at the pumps.	g. Inspections, tests and analyses will be performed upon the as-built system. NPSH tests of the pumps will be performed in a test facility. The analyses will consider the effects of: – Pressure losses for pump inlet piping and components. – Suction from the suppression pool with water level at the minimum value. – 50% minimum blockage of the pump suction strainers.	g. The available NPSH exceeds the NPSH required by the pumps.

Table 2.4.2 High Pressure Core Flooder System (Continued)

Inspections, Tests, Analyses and Acceptance Criteria		
Design Commitment	**Inspections, Tests, Analyses**	**Acceptance Criteria**
g. (continued)	g. (continued) – Design basis fluid temperature (100°C). – Containment at atmospheric pressure.	g. (continued)
h. Automatic transfer of pump suction from the CST to the suppression pool occurs when a low CST water level or high suppression pool water level signal exists.	h. Tests will be conducted on each HPCF division using simulated input signals for each process variable to cause trip conditions in two, three, and four instrument channels of the same process variable.	h. HPCF System receives suction transfer initiation signal.
i. Following receipt of a suction transfer initiation signal, the HPCF System automatically switches pump suction.	i. Test will be conducted on each HPCF division using simulated suction transfer initiation signals.	i. Upon receipt of a simulated suction transfer initiation signal, the following occurs: – Suppression pool suction valve opens. – CST suction valve closes.
j. When a high water level signal in the reactor pressure vessel exists, the reactor vessel injection valve is automatically closed.	j. Tests will be conducted on each HPCF division using simulated high reactor water level signals to cause trip conditions in two, three, and four instrument channels of water level variable.	j. The HPCF System receives a signal to close the reactor vessel injection valve.
k. Following receipt of an injection valve closure signal, the HPCF System automatically closes the vessel injection valve.	k. Tests will be conducted on each HPCF division using a simulated injection valve closure signal.	k. Upon receipt of a simulated injection valve closure signal, the reactor vessel injection valve closes.

Table 2.4.2 High Pressure Core Flooder System (Continued)

Inspections, Tests, Analyses and Acceptance Criteria		
Design Commitment	**Inspections, Tests, Analyses**	**Acceptance Criteria**
l. Following HPCF System injection valve closure on a high reactor water level signal, when the low water level initiation signal recurs, the vessel injection valve automatically re-opens to re-establish HPCF flow.	l. Tests will be conducted on each HPCF division using a simulated low reactor water level signal.	l. Upon receipt of a simulated low reactor water level signal, the vessel injection valve opens.
m. Each division of the HPCF System has a full flow test mode to permit testing during plant operation.	m. Tests will be conducted on each as-built HPCF division, using installed controls, power supplies and other auxiliaries. Water will be pumped in the test flow mode with system head equivalent to a pressure differential of at least 8.12 MPa between the RPV and the air space of the source water for the pump.	m. Water is pumped at a flow rate of not less than 182 m^3/h in the test flow mode.
n. If a system initiation signal occurs during the full flow test mode, each division of the HPCF System automatically aligns to the high pressure flooder mode.	n. Tests will be performed on each HPCF division using simulated initiation signals.	n. Upon receipt of a simulated initiation signal, each HPCF division automatically aligns to the high pressure flooder mode of operation from the test mode.

Table 2.4.2 High Pressure Core Flooder System (Continued)

Inspections, Tests, Analyses and Acceptance Criteria		
Design Commitment	**Inspections, Tests, Analyses**	**Acceptance Criteria**
o. Each division of the HPCF System has a minimum flow bypass mode that assures there is always flow in the HPCF pumps when they are operating.	o. Tests will be conducted on the pump minimum flow valve interlock logic using simulated pressure and flow signals.	o. The pump minimum flow valve receives a signal to open when signals indicative of the following conditions exist concurrently: – Pump discharge pressure is high when the pump starts and, – Pump flow is low. The pump minimum flow valve receives a signal to close when a signal indicative of the following condition exists: – Pump flow exceeds the minimum value.
p. Each division of the HPCF System has a minimum flow bypass mode that assures there is always flow in the HPCF pumps when they are operating.	p. Tests and analyses will be conducted on each division of the HPCF System in the minimum flow mode. The tests will quantify pump flow and compare with pump required minimum flow.	p. The available minimum flow exceeds the required minimum flow.
4. Each of the two HPCF divisions is powered from the respective Class 1E division as shown on Figure 2.4.2a. In the HPCF System, independence is provided between Class 1E divisions, and between Class 1E divisions and non-Class 1E equipment.	4. a. Tests will be performed on the HPCF System by providing a test signal in one Class 1E division at a time. b. Inspection of the as-built Class 1E divisions in the HPCF System will be performed.	4. a. The test signal exists only in the Class 1E division under test in the HPCF System. b. In the HPCF System, physical separation or electrical isolation exists between Class 1E divisions. Physical separation or electrical isolation exists between these Class 1E divisions and non-Class 1E equipment.

Table 2.4.2 High Pressure Core Flooder System (Continued)

Inspections, Tests, Analyses and Acceptance Criteria		
Design Commitment	**Inspections, Tests, Analyses**	**Acceptance Criteria**
5. Outside the primary containment, except for piping from the CST, each mechanical division of the HPCF System (Divisions B and C) is physically separated from the other division. Except for piping from the CST, both HPCF divisions are physically separated from the RCIC System.	5. Inspections of the as-built HPCF System will be performed.	5. Outside the primary containment, except for piping from the CST, each mechanical division of the HPCF System is physically separated from the other mechanical division of the HPCF System, and both HPCF divisions are separated from the RCIC System by structural and/or fire barriers.
6. Main control room displays and controls provided for the HPCF System are as defined in Section 2.4.2.	6. Inspections will be performed on the main control room displays and controls for the HPCF System.	6. Displays and controls exist or can be retrieved in the main control room as defined in Section 2.4.2.
7. RSS displays and controls provided for the HPCF System are as defined in Section 2.4.2.	7. Inspections will be performed on the RSS displays and controls for the HPCF System.	7. Displays and controls exist on the RSS as defined in Section 2.4.2.
8. MOVs designated in Section 2.4.2 as having an active safety-related function open, close, or both open and close under differential pressure, fluid flow, and temperature conditions.	8. Tests of installed valves for opening, closing or both opening and closing, will be conducted under preoperational differential pressure, fluid flow, and temperature conditions.	8. Upon receipt of the actuation signal, each MOV opens, closes, or both opens and closes, depending upon the valve's safety functions. The following valve opens in the following time limit: Valve — Time (s) Injection valve — ≤16 open
9. CVs designated in Section 2.4.2 as having an active safety-related function open, close, or both open and close, under system pressure, fluid flow, and temperature conditions.	9. Tests of installed valves for opening, closing, or both opening and closing, will be conducted under system preoperational pressure, fluid flow, and temperature conditions.	9. Based on the direction of the differential pressure across the valve, each CV opens, closes, or both opens and closes, depending upon the valve's safety functions.

Table 2.4.2 High Pressure Core Flooder System (Continued)

Inspections, Tests, Analyses and Acceptance Criteria		
Design Commitment	**Inspections, Tests, Analyses**	**Acceptance Criteria**
10. The HPCF System pumps have interlocks which prevent operation if both suction valves are closed.	10. Tests will be conducted on each HPCF System pump start logic using simulated valve position signals.	10. Each HPCF System pump is prevented from operating unless signals indicative of one of the following conditions exists: a. A suction path from the S/P is available (the S/P suction valve is fully open). b. A suction path from the condensate storage tank is available (the CST suction valve is fully open).

2.4.3 Leak Detection and Isolation System

Design Description

The Leak Detection and Isolation System (LDS) is a control and instrumentation system whose function is to detect and monitor leakage from the reactor coolant pressure boundary and initiate isolation of the leakage source. The system is designed to initiate automatic isolation of the process lines that penetrate the containment by closing the isolation valves. The functions of the LDS include: isolation of the main steamlines, the primary and secondary containment, and individual system process lines; activation of the Standby Gas Treatment System (SGTS); monitoring of leakages inside and outside the primary containment; and providing the monitored leakage parameters in the main control room.

The LDS is classified as a Class 1E safety-related system.

The LDS logic design uses four instrument channels to monitor each leakage parameter that initiates an isolation function on a two-out-of-four channel trip.

As shown on Figure 2.4.3, the LDS safety-related channel measurements are provided as inputs to the Safety System Logic and Control (SSLC) for signal processing, setpoint comparisons, and generation of the trip signals that initiate the isolation functions. The LDS isolation logic consists of safety-related sensors, redundant instrument channels and logic processors that initiate the automatic isolation functions. Once isolation is initiated, the logic seals in the isolation signal, and operator action is required to reset the logic to its normal state.

The following primary and secondary containment isolation and automatic control functions are provided by the LDS using four instrument channels to monitor leakage:

(1) Closure of the main steamline isolation valves (MSIVs) and main steamline (MSL) drain valves on a signal indicating low reactor water level, high main steamline flow in any main steamline, high ambient temperature in the MSL tunnel area or in the Turbine Building along the MSLs, low main condenser vacuum, or low steam inlet pressure to the main turbine.

(2) Isolation of the Reactor Water Cleanup (CUW) System process lines on a signal indicating low reactor water level, high ambient MSL tunnel area temperature, high mass differential flow, high ambient temperature in the CUW areas, or when the Standby Liquid Control (SLC) System is activated.

(3) Initiation of the SGTS on a signal indicating high drywell pressure, low reactor water level, high radiation in the secondary containment or high radiation in the fuel handling area.

(4) Isolation of Reactor Building Heating, Ventilating and Air Conditioning (HVAC) System on a signal indicating high drywell pressure, low reactor water level, high radiation in the secondary containment or high radiation in the fuel handling area.

(5) Isolation of containment purge and vent lines on a signal indicating high drywell pressure, low reactor water level, high radiation in the secondary containment or high radiation in the fuel handling area.

(6) Isolation of the Reactor Building Cooling Water (RCW) System and of the HVAC Normal Cooling Water (HNCW) System lines on a signal indicating high drywell pressure or low reactor water level.

(7) Isolation of the Residual Heat Removal (RHR) System shutdown cooling system loops on a signal indicating high reactor pressure or low reactor water level. Also, each RHR shutdown cooling division is individually isolated on a signal indicating high ambient temperature in its respective equipment area.

(8) Isolation of the Reactor Core Isolation Cooling (RCIC) System steamline to the RCIC turbine on a signal indicating high steam flow in the RCIC line, low steam pressure in the RCIC line, high RCIC turbine exhaust pressure, or high ambient temperature in the RCIC equipment area.

(9) Isolation of the Suppression Pool Cleanup (SPCU) System on a signal indicating high drywell pressure or low reactor water level.

(10) Isolation of the Flammability Control System (FCS) on a signal indicating high drywell pressure or low reactor water level.

(11) Isolation of the drywell sump low conductivity waste (LCW) and high conductivity waste (HCW) discharge lines on a signal indicating high drywell pressure or low reactor water level. Also, each discharge line is individually isolated on a signal indicating high radioactivity in the discharged liquid waste; only one channel is used for this function.

(12) Isolation of the LDS fission products monitor drywell sample and return lines on a signal indicating high drywell pressure or low reactor water level.

(13) The LDS provides to the neutron monitoring system a signal indicating a high drywell pressure or low reactor water level.

Separate manual controls in the control room are provided in LDS design for logic reset, MSIV operational control, MSIV partial closure tests, and for manual isolation of primary and secondary containment.

Each MSIV has three pilot solenoid valves; two are used for operational control and the third is used to test the MSIV for partial closure. Each MSIV pilot solenoid valve is controlled separately by the LDS as follows:

(1) Two of the three pilot solenoid valves of the MSIV are each provided with four divisional control signals to open the valve. MSIV closure occurs on loss of any two of the four divisional signals.

(2) The third MSIV pilot solenoid valve is provided with one-out-of-two manual control signals to test the MSIV for partial closure. Division I or III manual signal is used to close the outboard MSIV, while Division II or IV manual signal is used to close the inboard MSIV.

Except for MSIVs, the LDS provides three separate divisional isolation signals (Divisions I, II and III) for automatic closure of the primary and secondary containment isolation valves. Each LDS divisional isolation signal initiates closure of the isolation valves that are assigned in the same division.

The LDS design includes the following manual controls for separate isolation of the RCIC System, and closure of the MSIVs and the primary and secondary containment isolation valves:

(1) Four MSIV isolation switches–one per Divisions I, II, III, and IV.

Closure of all the MSIVs requires the actuation of any two of the four divisional MSIV isolation switches.

(2) Three primary and secondary containment isolation switches–one per Divisions I, II and III.

Each isolation switch closes its respective divisional isolation valves in the primary and secondary containment, except for the MSIVs and RCIC.

(3) Two RCIC isolation switches–one per Divisions I and II.

Either isolation switch isolates the steamline to the RCIC turbine and causes turbine trip. Division I switch closes the inboard, while Division II switch closes the outboard isolation valves.

Manual reset controls are provided at the divisional level to initialize the logic and to reset the logic after isolation has cleared. Separate reset functions are provided in the LDS logic design for the MSIVs, the RCIC, and the containment isolation.

The LDS design uses redundant channels and is fail-safe in the event of loss of electrical power to one division of LDS logic.

Each of the four LDS divisional logic channels and associated sensors is powered from its respective divisional Class 1E power supply. In the LDS, independence is provided between Class 1E divisions, and also between the Class 1E divisions and non-Class 1E equipment.

The LDS sensors are located in the Reactor Building and Turbine Building; the logic processors are located in the Control Building.

The LDS has the following displays and controls in the main control room:

(1) Parameter displays for LDS plant sensors defined on Figure 2.4.3.

(2) LDS manual controls as described above.

(3) LDS divisional trip status.

Inspections, Tests, Analyses and Acceptance Criteria

Table 2.4.3 provides a definition of the inspections, tests, and/or analyses, together with associated acceptance criteria, which will be undertaken for the LDS.

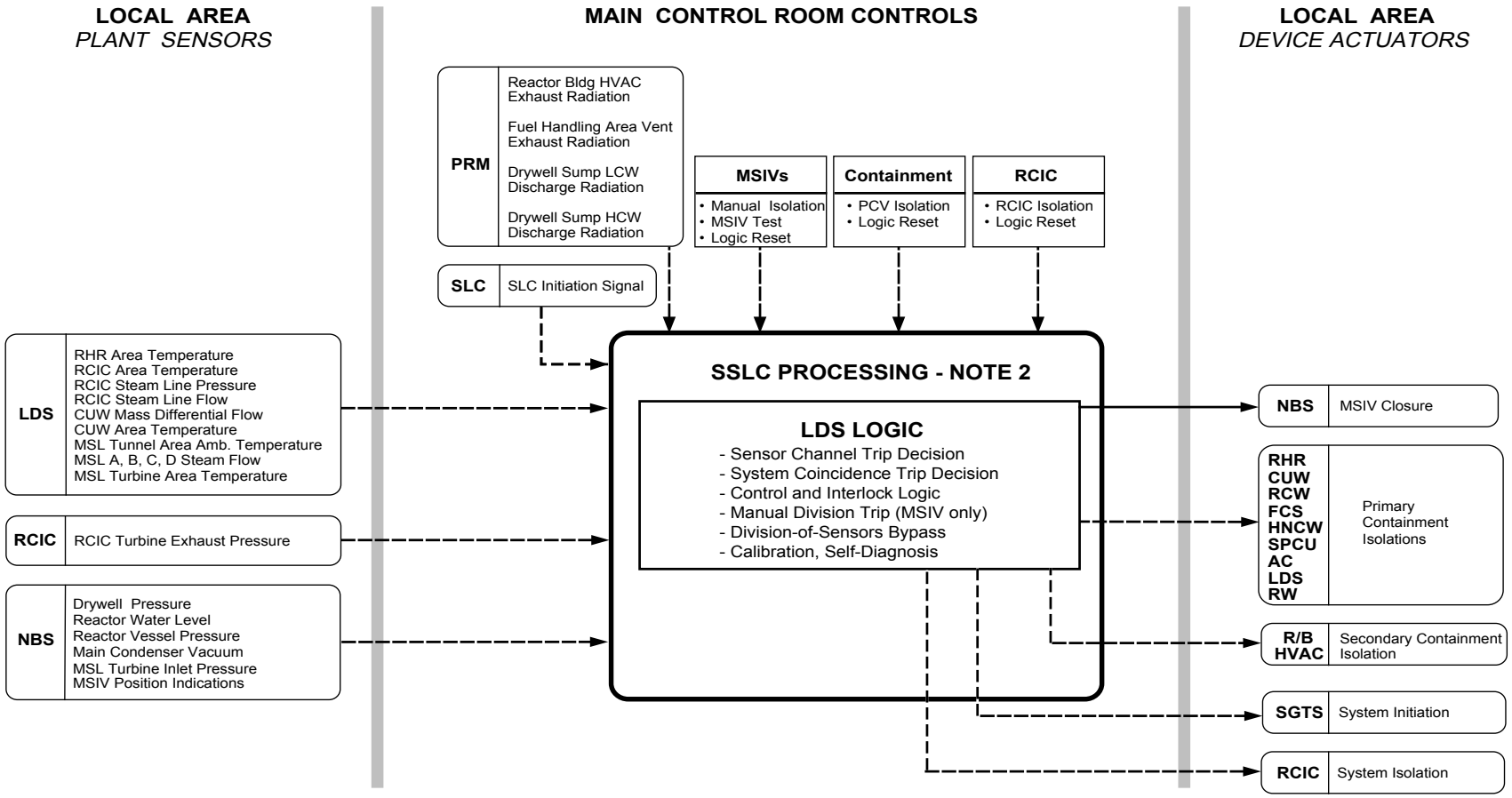

Notes:
1. Diagram represents one of four LDS divisions.
2. See Section 3.4, Figure 3.4b for SSLC processing.

Figure 2.4.3 Leak Detection and Isolation System Interface Diagram

Table 2.4.3 Leak Detection & Isolation System

Inspections, Tests, Analyses and Acceptance Criteria		
Design Commitment	**Inspections, Tests, Analyses**	**Acceptance Criteria**
1. The equipment comprising the LDS is defined in Section 2.4.3.	1. Inspection of the as-built system will be conducted.	1. The as-built LDS conforms with the description in Section 2.4.3.
2. LDS logic uses four independent sensor instrument channels of each process variable described in Section 2.4.3 for its automatic control and isolation functions.	2. Tests will be conducted using simulated input signals for each process variable to cause trip conditions in two, three, and four instrument channels of the same process variable.	2. Isolation signal is initiated when at least any two out of four channels have tripped.
3. Each MSIV can be subjected to a partial closure test from the main control room.	3. Tests will be conducted by actuating each MSIV test switch.	3. When the test switch is actuated, the MSIV partially closes and then reopens automatically.
4. LDS provides separate manual controls in the main control room for MSIV closure, for isolation of the primary and secondary containment, and for isolation of the RCIC System.	4. Tests will be performed on the as-built system as follows: a. Simultaneously actuate any two of the four MSIV isolation switches to close all MSIVs. b. Actuate each RCIC isolation switch (Divisions I and II) to isolate the RCIC System. c. Actuate each primary and secondary containment isolation switch (Divisions I, II and III) to isolate the containment.	4. Upon manual actuation, the following actions occur: a. Closure of all the MSIVs occurs only when any two out of four switches are actuated. b. Isolation of the RCIC System occurs when Division I switch closes the inboard or Division II switch closes the outboard isolation valves. c. Each divisional primary and secondary containment isolation switch closes only its respective containment isolation valves.
5. Manual reset controls are provided to perform reset functions as described in Section 2.4.3.	5. Tests will be performed using the LDS reset controls.	5. The logic circuitry resets for LDS operation.
6. LDS design is fail-safe in the event of loss of electrical power to one division of LDS logic.	6. Tests will be conducted by disconnecting electrical power to one division of LDS logic at a time.	6. Upon loss of electrical power to one division of LDS logic, the affected LDS divisional channel trips.

Table 2.4.3 Leak Detection & Isolation System (Continued)

Inspections, Tests, Analyses and Acceptance Criteria		
Design Commitment	**Inspections, Tests, Analyses**	**Acceptance Criteria**
7. Each of the four LDS divisional logic channels and associated sensors is powered from its respective divisional Class 1E power supply. In the LDS, independence is provided between Class 1E divisions, and between Class 1E divisions and non-Class 1E equipment.	7. a. Tests will be performed on the LDS by providing a test signal to only one Class 1E division at a time. b. Inspection of the as-installed Class 1E divisions in the LDS will be performed.	7. a. The test signal exists only in the Class 1E division under test in the LDS. b. In the LDS, physical separation or electrical isolation exists between Class 1E divisions. Physical separation or electrical isolation exists between these Class 1E divisions and non-Class 1E equipment.
8. Main control room displays and controls provided for the LDS are as defined in Section 2.4.3.	8. Inspections will be performed on the main control room displays and controls for the LDS.	8. Displays and controls exist or can be retrieved in the main control room as defined in Section 2.4.3.

2.4.4 Reactor Core Isolation Cooling System

Design Description

The Reactor Core Isolation Cooling (RCIC) System consists of a turbine, pump, piping, valves, controls and instrumentation. The RCIC turbine is driven by the steam from the reactor pressure vessel (RPV) which then drives the RCIC pump. The function of the RCIC System is to provide makeup water to the RPV.

The RCIC steam supply to the turbine branches off one of the main steamlines inside containment upstream of the inboard MSIV and exhausts to the suppression pool (S/P). The primary source of RCIC pump suction is the Condensate Storage Tank (CST). The suppression pool is the secondary source of RCIC pump suction. Figure 2.4.4a shows the basic system configuration and scope. Figure 2.4.4b shows RCIC System control interfaces.

The RCIC System shown on Figure 2.4.4a is classified as safety-related.

The RCIC System operates in the following modes:

(1) RPV water makeup.

(2) Full flow test.

(3) Minimum flow bypass.

RPV Water Makeup Mode

As shown on Figure 2.4.4b, the RCIC System channel measurements are provided to the Safety System Logic and Control (SSLC) System for signal processing, setpoint comparisons, and generating trip signals. The RCIC System is automatically initiated when either a high drywell pressure or low reactor water level condition exists. RCIC System is actuated at a reactor water level higher than the High Pressure Core Flooder (HPCF) system actuation level. The SSLC processors use a two-out-of-four voting logic for system initiation and shutdown. Manual RCIC System initiation can be performed from the main control room (MCR). The RCIC System can be started by local operation of RCIC System components outside the MCR.

The RCIC System automatically shuts down when a high reactor water level condition exists. Following RCIC shutdown on high reactor water level signal, the RCIC System automatically restarts to provide RPV water makeup, if the low reactor water level initiation signal recurs.

During this mode, the primary source pump suction is the CST. Automatic transfer of pump suction from the CST to the S/P occurs when a low CST water level or a high suppression pool water level signal exists. This transfer can be manually overridden

from the MCR. The CST and S/P water level signals are processed through SSLC's two-out-of four voting logic to initiate suction transfer.

In the RPV water makeup mode, the RCIC pump delivers a flow rate of at least 182 m^3/h against a maximum differential pressure (between the RPV and the suction source) of 8.12 MPa. This flow rate is achieved within 29 seconds of receipt of the system initiation signal. The RCIC pump has sufficient net positive suction head (NPSH) available at the pump.

The RCIC System operates for a period of at least 2 hours under conditions of no AC power availability and no other simultaneous failures, accidents or other design basis conditions.

Full Flow Test Mode

The RCIC System has a full flow test mode to permit pump flow testing during plant operation. During the test, water is pumped from the suppression pool and returned to the suppression pool via the test return line. The vessel injection valve is kept closed.

If a system initiation signal occurs during the full flow test mode, the RCIC System automatically aligns to the RPV water makeup mode.

Minimum Flow Bypass Mode

The RCIC System has a minimum flow bypass mode that assures there is always flow in the RCIC pump when it is operating. This is accomplished automatically by monitoring pump discharge flow, and opening a minimum flow valve to the suppression pool when flow falls below minimum value. The minimum flow valve closes when the pump flow exceeds the minimum value. Minimum flow bypass operation is automatic based on a flow signal opening the minimum flow valve when the flow is low, with a concurrent high pump discharge pressure signal.

Other Provisions

The RCIC System shown on Figure 2.4.4a is classified as Seismic Category I. Figure 2.4.4a shows the ASME Code class for the RCIC System. The RCIC System is located inside primary containment and in the Reactor Building.

As shown on Figure 2.2.4a, the RCIC System components are powered from Class 1E Division I, except for the steam supply outboard containment isolation valve, which is powered from Class 1E Division II. All RCIC System components shown on Figure 2.2.4a except the inboard containment isolation valves are powered from DC sources. In the RCIC System, independence is provided between Class 1E divisions, and also between Class 1E divisions and non-Class 1E equipment.

Outside the primary containment, except for the piping from the CST, the RCIC System shown on Figure 2.4.4a is physically separated from the two divisions of the High Pressure Core Flooder (HPCF) System.

The RCIC System has the following displays and controls in the main control room (MCR):

(1) Parameter displays for the instruments shown on Figure 2.4.4a.

(2) Controls and status indication for the active safety-related components shown on Figure 2.4.4a.

(3) Manual system level initiation capability for RPV water makeup mode.

(4) Manual override of the automatic CST to S/P suction transfer.

The safety-related electrical components (including instrumentation and control) shown on Figure 2.4.4a located inside primary containment and in the Reactor Building are qualified for a harsh environment.

The motor-operated valves (MOVs) shown on Figure 2.4.4a have active safety-related functions to open, close, or both open and close, and performs these functions under differential pressure, fluid flow, and temperature conditions.

The check valves (CV's) shown on Figure 2.4.4a have active safety-related functions to open, close, or both open and close under system pressure, fluid flow, and temperature conditions.

The RCIC turbine is tripped if a low pump suction pressure condition is present.

The following RCIC System components:

(1) Piping and components from the pump suction MOV's up to the pump inlet,

(2) Barometric condenser and associated equipment

have a design pressure of 2.82 MPaG for intersystem loss-of-coolant accident (ISLOCA) conditions.

Inspections, Tests, Analyses and Acceptance Criteria

Table 2.4.4 provides a definition of the inspections, test and/or analyses, together with associated acceptance criteria, which will be undertaken for the RCIC System.

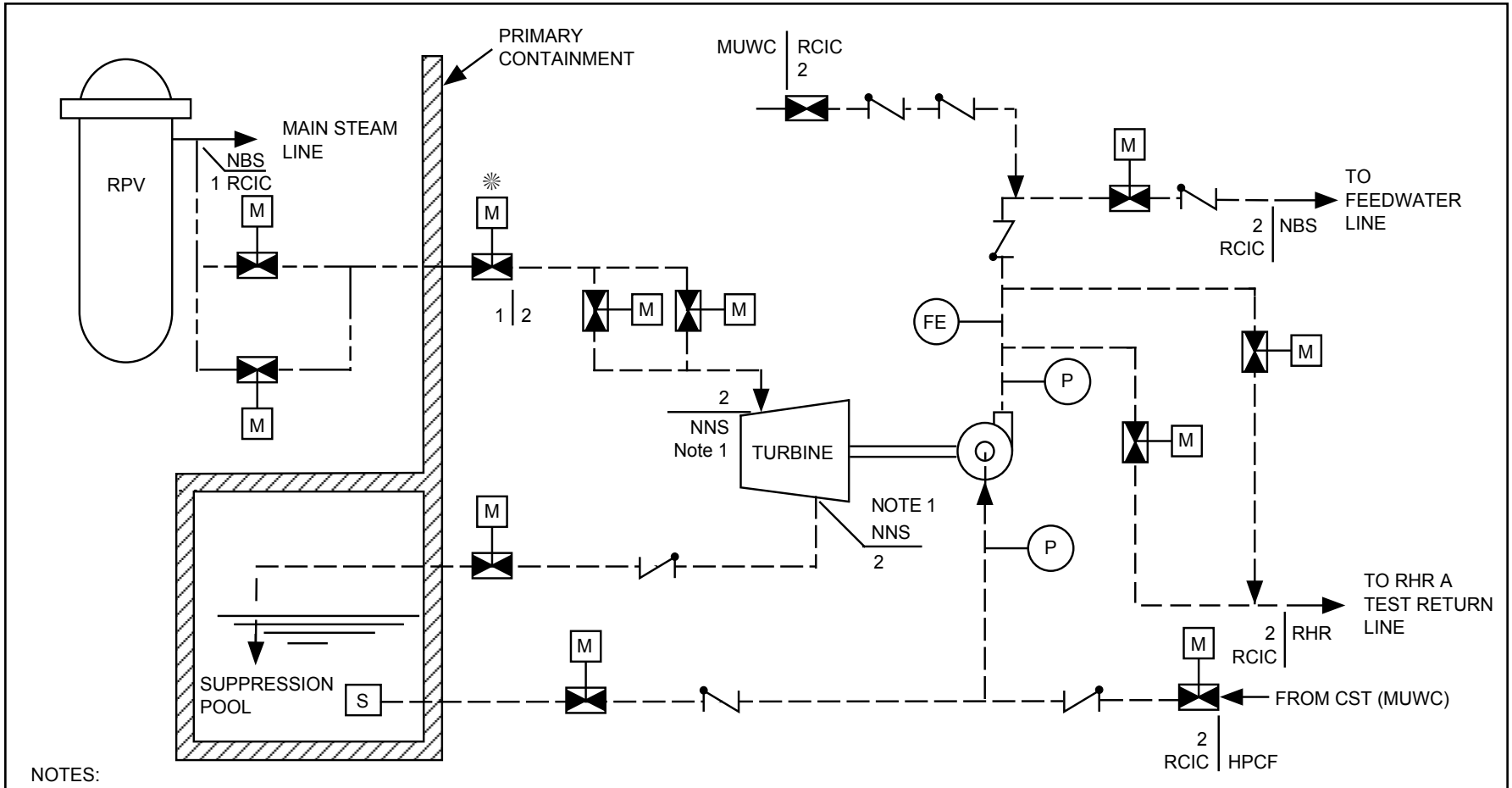

NOTES:

1. RCIC TURBINE IS NOT COVERED BY ASME CODE SECTION III BUT IS DESIGNED, FABRICATED, AND INSTALLED TO SAFETY-RELATED STANDARDS AND IS CONSISTENT WITH THE ASME CODE SECTION III REQUIREMENTS. THE TURBINE INCLUDES THE TURBINE TRIP AND THROTTLE VALVE.

2. ALL RCIC SYSTEM COMPONENTS SHOWN ON THIS FIGURE ARE POWERED FROM CLASS 1E DIVISION I EXCEPT FOR THE OUTBOARD CONTAINMENT ISOLATION VALVE (✳) WHICH IS CLASS 1E DIVISION II.

3. ALL RCIC SYSTEM COMPONENTS SHOWN ON THIS FIGURE EXCEPT THE INBOARD CONTAINMENT ISOLATION VALVES, ARE POWERED FROM DC SOURCES.

Figure 2.4.4a Reactor Core Isolation Cooling System

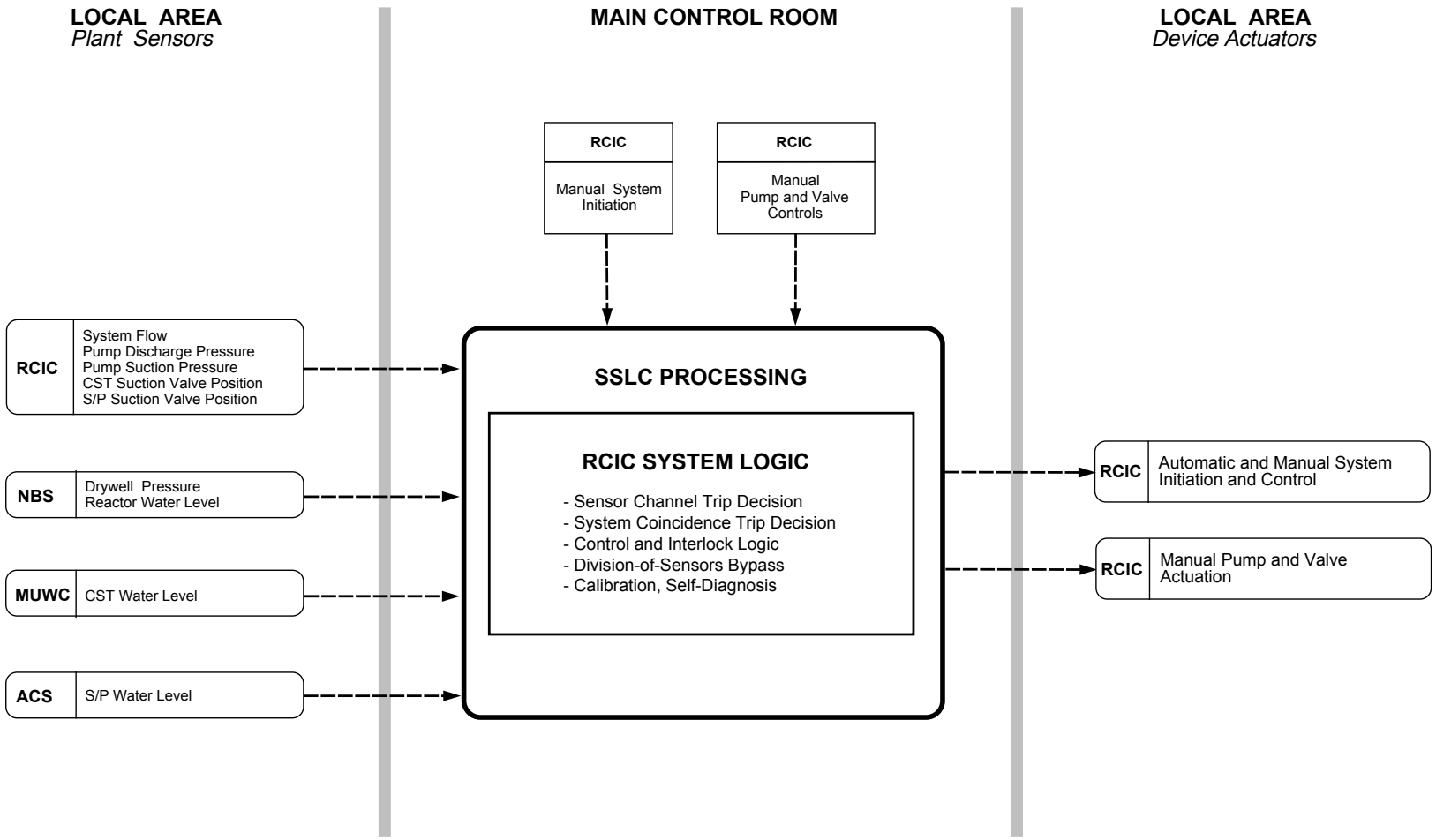

Notes:
1. See Section 3.4, Figure 3.4b for SSLC Processing.
2. The inboard steam supply isolation valve has diverse actuation and status indication. See Section 3.4.

Figure 2.4.4b Reactor Core Isolation Cooling System Control Interface Diagram

Table 2.4.4 Reactor Core Isolation Cooling System

Inspections, Tests, Analyses and Acceptance Criteria		
Design Commitment	**Inspections, Tests, Analyses**	**Acceptance Criteria**
1. The basic configuration of the RCIC System is as shown on Figures 2.4.4a and 2.4.4b.	1. Inspections of the as-built system will be conducted.	1. The as-built RCIC System conforms with the basic configuration shown on Figures 2.4.4a and 2.4.4b.
2. The ASME Code components of the RCIC System retain their pressure boundary integrity under internal pressures that will be experienced during service.	2. A hydrostatic test will be conducted on those Code components of the RCIC System required to be hydrostatically tested by the ASME Code.	2. The results of the hydrostatic test of the ASME Code components of the RCIC System conform with the requirements in the ASME Code Section III.
3.	3.	3.
a. The RCIC System is automatically initiated in the RPV water makeup mode when either a high drywell pressure or a low reactor water level condition exists.	a. Tests will be conducted using simulated input signals for each process variable to cause trip conditions in two, three, and four instrument channels of the same process variable.	a. The RCIC System receives an initiation signal.
b. Manual RCIC System initiation can be performed.	b. Tests will be conducted by manually initiating RCIC System.	b. The RCIC System receives an initiation signal.

Table 2.4.4 Reactor Core Isolation Cooling System (Continued)

Inspections, Tests, Analyses and Acceptance Criteria		
Design Commitment	**Inspections, Tests, Analyses**	**Acceptance Criteria**
c. Following receipt of an initiation signal, the RCIC System automatically initiates and operates in the RPV water makeup mode.	c. Tests will be conducted on the RCIC System using simulated initiation signal.	c. Upon receipt of a simulated initiation signal, the following occurs: (1) Steam supply bypass valve receives open signal. (2) Test return valves receive close signal. (3) CST suction valve receives open signal. (4) Injection valve receives open signal after a 10-second time delay. (5) Steam admission valve receives open signal after a 10-second time delay.
d. The RCIC System automatically shuts down when a high reactor water level condition exists.	d. Tests will be conducted using simulated high reactor water level signals to cause trip conditions in two, three, and four instrument channels of water level variable.	d. RCIC System receives shutdown signal.
e. Following receipt of shutdown signal, the RCIC System automatically terminates the RPV water makeup mode.	e. Tests will be conducted on RCIC System using simulated shutdown signal.	e. Upon receipt of simulated shutdown signals, the following occurs: (1) Steam supply bypass valve receives close signal. (2) RCIC initiation logic resets. (3) Injection valve receives close signal. (4) Steam admission valve receives close signal.

Table 2.4.4 Reactor Core Isolation Cooling System (Continued)

Inspections, Tests, Analyses and Acceptance Criteria		
Design Commitment	**Inspections, Tests, Analyses**	**Acceptance Criteria**
f. Following RCIC shutdown on high reactor water level signal, the RCIC System automatically restarts to provide RPV water makeup if low reactor water level signal recurs.	f. Tests will be conducted using simulated low reactor water level signals.	f. Upon receipt of simulated low reactor water level signals, the following occurs: (1) Steam supply bypass valve receives open signal. (2) Test return valves receive close signal. (3) CST suction valve receives open signal. (4) Injection valve receives open signal after a 10 second time delay. (5) Steam admission valve receives open signal after a 10 second time delay.
g. The RCIC System automatically initiates suction transfer from the CST to the suppression pool when either a low CST water level or a high suppression pool water level exists.	g. Tests will be conducted using simulated input signals for each process variable to cause trip conditions in two, three, and four instrument channels of the same process variable.	g. The RCIC System receives suction transfer initiation signal.
h. Following receipt of suction transfer initiation signal, the RCIC System automatically switches pump suction. This transfer can be manually overridden from the MCR.	h. Tests will be conducted using simulated suction transfer initiation signals.	h. Upon receipt of simulated suction transfer initiation signals, the following occurs: (1) Suppression pool suction valve opens. (2) CST suction valve closes. The suction transfer can be manually overridden from the MCR.

Table 2.4.4 Reactor Core Isolation Cooling System (Continued)

Inspections, Tests, Analyses and Acceptance Criteria		
Design Commitment	**Inspections, Tests, Analyses**	**Acceptance Criteria**
i. In the RPV water makeup mode, the RCIC pump delivers a flow rate of at least 182 m^3/h against a maximum differential pressure (between the RPV and the pump suction) of 8.12 MPa.	i. Tests will be conducted in a test facility on the RCIC System pump and turbine.	i. (1) The RCIC pump delivers a flow rate of at least 182 m^3/h against a maximum differential pressure (between the RPV and the pump suction) of 8.12 MPa. (2) The RCIC turbine delivers the speed and torque required by the pump at the above conditions.
j. The RCIC System pump has sufficient NPSH.	j. Inspections, tests, and analyses will be performed based upon the as-built system. NPSH tests of the pump will be performed at a test facility. The analyses will consider the effects of: (1) Pressure losses for pump inlet piping and components. (2) Suction from suppression pool with water level at the minimum value. (3) 50% blockage of pump suction strainers. (4) Design basis fluid temperature (77°C). (5) Containment at atmospheric pressure.	j. The available NPSH exceeds the NPSH required by the pump.

Table 2.4.4 Reactor Core Isolation Cooling System (Continued)

Inspections, Tests, Analyses and Acceptance Criteria		
Design Commitment	**Inspections, Tests, Analyses**	**Acceptance Criteria**
k. The RCIC System operates for a period of at least 2 hours under conditions of no AC power availability and no other simultaneous failures, accidents, or other design basis conditions.	k. Inspections and analyses of the as-built RCIC and supporting systems will be performed to determine RCIC capability.	k. The RCIC System can operate for a period of at least 2 hours under conditions of no AC power availability and no other simultaneous failures, accidents, or other design basis conditions.
l. The RCIC can be started by local operation of the RCIC System components outside the MCR.	l. Tests will be conducted locally on RCIC System components required for system operation.	l. RCIC System components required for system operation can be actuated locally.
4. If a system initiation signal occurs during the full flow test mode, the RCIC System automatically aligns to the RPV water makeup mode.	4. Test will be conducted using simulated initiation signals.	4. The RCIC System automatically aligns to RPV water makeup mode from test mode upon receipt of an initiation signal.
5. The RCIC System has a minimum flow bypass mode that assures there is always flow in the RCIC pump when it is operating.	5. Tests will be conducted on the pump minimum flow valve interlock logic using simulated pressure and flow signals.	5. The pump minimum flow valve receives a signal to open when signals indicative of the following conditions exist concurrently: a. Pump discharge pressure is high when the pump starts. b. Pump flow is low. The pump minimum flow valve receives a signal to close when a signal indicative of the following condition exists: a. Pump flow exceeds minimum value.

Table 2.4.4 Reactor Core Isolation Cooling System (Continued)

Inspections, Tests, Analyses and Acceptance Criteria		
Design Commitment	**Inspections, Tests, Analyses**	**Acceptance Criteria**
6. As shown on Figure 2.4.4a, the RCIC System components are powered from Class 1E division I, except for the steam supply outboard containment isolation valve which is powered from Class 1E division II. All RCIC System components shown on Figure 2.4.4a except the inboard containment isolation valves are powered from DC sources. In the RCIC System, independence is provided between Class 1E Divisions and between Class 1E Divisions and non-Class 1E equipment.	6. a. Tests will be performed in the RCIC System by providing a test signal in only one Class 1E division at a time. b. Inspections of the as-built Class 1E divisions in the RCIC System will be performed.	6. a. The test signal exists only in the Class 1E division under test in the RCIC System. b. In the RCIC System physical separation or electrical isolation exists between Class 1E divisions in the RCIC System. Physical separation or electrical isolation exists between Class 1E divisions and non-Class 1E equipment.
7. Outside the primary containment, except for the piping from the CST, the RCIC System shown on Figure 2.4.4a, is physically separated from the two divisions of the HPCF System.	7. Inspections of the as-installed RCIC System will be performed.	7. Outside the primary containment, except for the piping from the CST, the RCIC System shown on Figure 2.4.4a, is physically separated from the two divisions of the HPCF System by structural and/or fire barriers.
8. Main control room displays and controls provided for RCIC System are as defined in Section 2.4.4.	8. Inspections will be performed on the main control room displays and controls for the RCIC System.	8. Displays and controls exist or can be retrieved in the main control room as defined in Section 2.4.4.

Table 2.4.4 Reactor Core Isolation Cooling System (Continued)

Inspections, Tests, Analyses and Acceptance Criteria		
Design Commitment	**Inspections, Tests, Analyses**	**Acceptance Criteria**
9.	9.	9.
a. MOVs designated in Section 2.4.4 as having active safety-related function open, close or both open and close under differential pressure, fluid flow, and temperature conditions.	a. Tests of installed valves for opening, closing, or both opening and closing will be conducted under pre-operational differential pressure, fluid flow, and temperature conditions.	a. Upon receipt of the actuating signal, each MOVs opens, closes, or both opens and closes, depending upon the valve's safety functions. The following valves open, or close, in the following time limits: Valve — Time Steam Supply Containment Isolation Valves — ≤ 30 s Close Injection Valve — ≤ 15 s Open
b. CVs designated in Section 2.4.4 as having an active safety-related function open, close, or both open and close, under system pressure, fluid flow, and temperature conditions.	b. Tests of installed valves for opening, closing, or both opening and closing, will be conducted under system preoperational pressure, fluid flow, and temperature conditions.	b. Based on the direction of the differential pressure across the valve, each CV opens, closes, or both opens and closes, depending upon the valve's safety functions.
10. The RCIC turbine is tripped if low suction pressure condition is present.	10. Test will be conducted using a simulated low suction pressure signal.	10. The turbine trip and throttle valve receives a trip signal.

2.5.1 Fuel Servicing Equipment

No entry for this system.

2.5.2 Miscellaneous Servicing Equipment

No entry for this system.

2.5.3 Reactor Pressure Vessel Servicing Equipment

No entry for this system.

2.5.4 RPV Internal Servicing Equipment

No entry for this system.

2.5.5 Refueling Equipment

Design Description

The Reactor Building is supplied with a refueling machine for fuel movement and servicing plus an auxiliary platform for servicing operations from the vessel flange level.

The refueling machine is a gantry crane, which spans the reactor vessel and the storage pools on bedded tracks in the refueling floor. A telescoping mast and grapple suspended from a trolley system is used to lift and orient fuel bundles for placement in the core and/or storage racks. Two auxiliary hoists, one main and one auxiliary monorail trolley-mounted, are provided for in-core servicing. Control of the machine is from an operator station on the refueling floor.

The refueling machine is classified as non-safety-related.

A position indicating system and travel limit computer are provided to locate the grapple over the vessel core and prevent collision with pool obstacles. The mast grapple has a redundant load path so that no single component failure results in a fuel bundle drop. Interlocks on the machine: (1) prevent hoisting a fuel bundle over the vessel unless an all-control-rod-in permissive is present; (2) limit vertical travel of the fuel grapple to provide shielding over the grappled fuel during transit; (3) prevent lifting of fuel without grapple hook engagement and load engagement.

The refueling machine is classified as Seismic Category I.

Inspections, Tests, Analyses and Acceptance Criteria

Table 2.5.5 provides a definition of the inspection, test, and/or analyses, together with associated acceptance criteria, which will be undertaken for the refueling machine. No entries are proposed for the auxiliary platform.

Table 2.5.5 Refueling Equipment

Inspections, Tests, Analyses and Acceptance Criteria		
Design Commitment	**Inspections, Tests, Analyses**	**Acceptance Criteria**
1. The basic configuration of the refueling machine is described in Section 2.5.5.	1. Inspections of the as-built refueling machine will be conducted.	1. The as-built refueling machine conforms with the basic configuration described in Section 2.5.5.
2. Interlocks on the machine: a. Prevent hoisting a fuel bundle over the vessel unless an all-control-rod-in permissive is present. b. Limit vertical travel of the fuel grapple to provide shielding over the grappled fuel during transit. c. Prevent lifting of fuel without grapple hook engagement and load engagement.	2. Tests will be conducted on the as-built refueling machine using simulated signals and loads.	2. Interlocks on the machine: a. Prevent hoisting a fuel bundle over the vessel unless an all-control-rod-in permissive is present. b. Limit vertical travel of the fuel grapple to provide shielding over the grappled fuel during transit. c. Prevent lifting of fuel without grapple hook engagement and load engagement.

2.5.6 Fuel Storage Facility

Design Description

The Fuel Storage Facility provides storage racks for the temporary and long-term storage of new and spent fuel and associated equipment. The new and spent fuel storage racks use the same configuration and prevent inadvertent criticality.

The racks are classified as non-safety-related.

Racks provide storage for spent fuel in the spent fuel storage pool in the Reactor Building. New fuel, 40% of reactor core, is stored in the new fuel storage vault in the Reactor Building. The racks are top loading, with fuel bail extended above the rack. The spent fuel racks have a minimum storage capacity of 270% of the reactor core, which is equivalent to a minimum of 2354 fuel storage positions. The new and spent fuel racks maintain a subcriticality of at least 5% Δk under dry or flooded conditions. The rack arrangement prevents accidental insertion of fuel assemblies between adjacent racks and allows flow to prevent the water from exceeding 100°C.

The racks are classified as Seismic Category I.

Inspections, Tests, Analyses and Acceptance Criteria

Table 2.5.6 provides a definition of the inspections, tests, and/or analyses, together with associated acceptance criteria, which will be undertaken for the new and spent fuel storage racks.

Table 2.5.6 Fuel Storage Facility

Inspections, Tests, Analyses and Acceptance Criteria		
Design Commitment	**Inspections, Tests, Analyses**	**Acceptance Criteria**
1. The basic configuration of the new and spent fuel racks is described in Section 2.5.6.	1. Inspections of the as-built system will be conducted	1. The as-built new and spent fuel storage racks conform with the basic configuration described in Section 2.5.6.
2. The new and spent fuel racks maintain a subcriticality of at least 5% Δk under dry or flooded conditions.	2. Analyses will be performed to determine the k_{eff} of the as-built new and spent fuel racks.	2. An analysis report exists which concludes that the new and spent fuel racks have a subcriticality of at least 5%Δk under dry or flooded conditions.
3. The rack arrangement prevents accidental insertion of fuel assemblies between adjacent racks.	3. Inspections of the as-built new and spent fuel racks will be performed.	3. The rack arrangement prevents accidental insertion of fuel assemblies between adjacent racks.
4. The rack arrangement allows flow to prevent the water from exceeding 100°C.	4. An analysis of the as-built spent fuel rack will be performed to determine the maximum water temperature.	4. An analysis report exists which concludes that the rack arrangement allows flow to prevent the water from exceeding 100°C.

2.5.7 Under-Vessel Servicing Equipment

No entry for this system.

2.5.8 CRD Maintenance Facility

No entry for this system.

2.5.9 Internal Pump Maintenance Facility

No entry for this system.

2.5.10 Fuel Cask Cleaning Facility

No entry for this system.

2.5.11 Plant Start-up Test Equipment

No entry for this system.

2.5.12 Inservice Inspection Equipment

No entry for this system.

2.6.1 Reactor Water Cleanup System

Design Description

The Reactor Water Cleanup (CUW) System removes particulate and dissolved impurities from the reactor coolant by circulating a portion of the reactor coolant through a filter-demineralizer.

The CUW System removes excess coolant from the reactor system during startup, shutdown and hot standby. The excess water is directed to the radwaste or main condenser. The CUW System also provides processed water to the reactor head spray nozzle for Reactor Pressure Vessel (RPV) cooldown.

The CUW System reduces RPV temperature gradients by maintaining circulation in the bottom head of the RPV during periods when the reactor internal pumps are unavailable.

Figure 2.6.1 shows the basic CUW System configuration and scope. Except for the primary containment penetration and isolation valves, the CUW System is classified as non-safety-related. The major portion of the system is located outside of the primary containment in the Reactor Building.

CUW System piping and components from the RPV, out to and including the outboard isolation valves, are part of the reactor coolant pressure boundary and are classified as Seismic Category I. The remainder of the piping system is classified as non-Seismic Category I. Figure 2.6.1 shows the ASME Code class for the CUW system components

The inboard containment isolation valve is powered from Class 1E Division II, and the outboard containment isolation valves are powered from Class 1E Division I. In the CUW System, independence is provided between the Class 1E divisions, and between the Class 1E divisions and non-Class 1E equipment.

The main control room has control and open/close status indication for the containment isolation valves.

The safety-related electrical equipment, located in the primary containment and Reactor Building is qualified for a harsh environment.

The motor-operated valves (MOVs) for containment isolation shown in Figure 2.6.1 have active safety-related functions to close and perform this function under differential pressure, fluid flow and temperature conditions.

The check valves (CVs) shown on Figure 2.6.1, have active safety-related function to close under system pressure, fluid flow, and temperature conditions.

The CUW suction line is provided with a flow restrictor which provides flow restricting and flow monitoring functions. Maximum throat diameter is 135 mm.

The CUW piping and components downstream of the blowdown valve leading towards the Radwaste System shown on Figure 2.6.1 have a design pressure of 2.82 MPaG for intersystem loss-of-coolant accident (ISLOCA) conditions.

Inspections, Tests, Analyses and Acceptance Criteria

Table 2.6.1 provides a definition of the inspections, tests, and/or analyses, together with associated acceptance criteria, which will be undertaken for the CUW System.

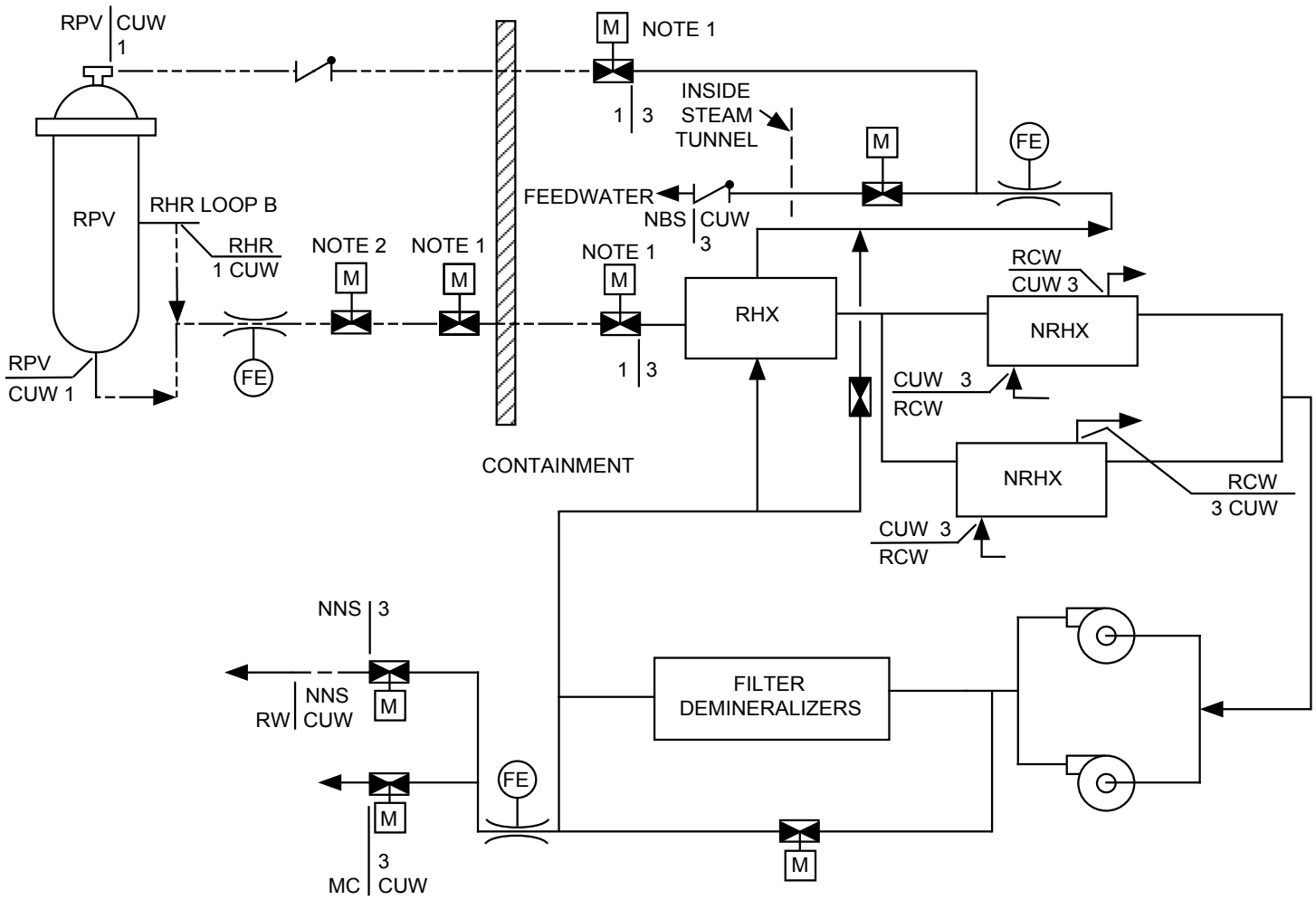

NOTES:
1. THE INBOARD CONTAINMENT ISOLATIONVALVE IS POWERED FROM CLASS 1E DIVISION II AND THE OUTBOARD ISOLATION VALVES ARE POWERED FROM CLASS 1E DIVISION I.
2. NOT CONSIDERED A CONTAINMENT ISOLATION VALVE; CLASSIFIED AS NON-SAFETY-RELATED.

Figure 2.6.1 Reactor Water Cleanup System

Table 2.6.1 Reactor Water Cleanup System

Inspections, Tests, Analyses and Acceptance Criteria		
Design Commitments	**Inspections, Tests, Analyses**	**Acceptance Criteria**
1. The basic configuration for the CUW System is as shown in Figure 2.6.1.	1. Inspection of the as-built system will be conducted.	1. The as-built CUW System conforms with the basic configuration shown in Figure 2.6.1.
2. The ASME Code components of the CUW System retain their pressure boundary integrity under internal pressures that will be experienced during service.	2. A hydrostatic test will be conducted on those Code components of the CUW System required to be hydrostatically tested by the ASME Code.	2. The results of the hydrostatic test of the ASME Code components of the CUW System conform with the requirements in the ASME Code, Section III.
3. The inboard containment isolation valve is powered from Class 1E Division II, and the outboard containment isolation valves are powered from Class 1E Division I. In the CUW System, independence is provided between Class 1E divisions, and between Class 1E divisions and non-Class 1E equipment.	3. a. Tests will be performed on the CUW System by providing a test signal in only one Class 1E division at a time. b. Inspections of the as-installed Class 1E divisions in the CUW System will be performed.	3. a. The test signal exists only in the Class 1E division under test in the CUW System. b. In the CUW System, physical separation or electrical isolation exists between Class 1E divisions. Physical separation or electrical isolation exists between Class 1E divisions and non-Class 1E equipment.
4. Main control room displays and controls provided for CUW System are as defined in Section 2.6.1.	4. Inspections will be performed on the main control room displays and controls for the CUW System.	4. Displays and controls exist or can be retrieved in main control room as defined in Section 2.6.1.

Table 2.6.1 Reactor Water Cleanup System (Continued)

Inspections, Tests, Analyses and Acceptance Criteria		
Design Commitments	**Inspections, Tests, Analyses**	**Acceptance Criteria**
5.	5.	5.
a. MOVs designated in Section 2.6.1 as having an active safety- related function close under differential pressure and fluid flow and temperature conditions.	a. Tests of installed valves for closing will be conducted under preoperational differential pressure, fluid flow, and temperature conditions.	a. Upon receipt of the actuation signal each MOV closes. The following valves close in the following time limits: Valve — Time (s) Suction line inboard containment isolation valve — ≤30 Close Suction line outboard containment isolation valve — ≤30 Close
b. CVs designated in Section 2.6.1 as having an active safety-related function close under system pressure, fluid flow, and temperature conditions.	b. Tests of installed valves for closing will be conducted under system pre-operational pressure, fluid flow, and temperature conditions.	b. Each CV closes.
6. Maximum throat diameter of the CUW suction line flow restrictor is 135 mm.	6. Inspections will be performed on the CUW suction line flow restrictor throat diameter.	6. Maximum throat diameter of the CUW suction line flow restrictor is 135 mm.

2.6.2 Fuel Pool Cooling and Cleanup System

Design Description

The Fuel Pool Cooling and Cleanup (FPC) System (Figure 2.6.2) removes decay heat generated by the spent fuel assemblies in the spent fuel storage pool. The system also maintains the water quality and monitors and maintains the water level above the spent fuel in the spent fuel storage pool. Figure 2.6.2 shows the basic FPC System configuration and scope.

The FPC System is classified non-safety-related, except for piping connections and valves for safety-related fuel pool makeup and supplemental cooling by the Residual Heat Removal (RHR) System.

The safety-related makeup water source for the spent fuel storage pool is provided by the RHR System, which pumps suppression pool water to the FPC System.

The spent fuel storage pool has no piping connections (inlet, outlet, drains or other piping) located below a point 3m above the top of active fuel located in the spent fuel storage racks.

The FPC System components, with the exception of the filter/demineralizer unit, are classified as Seismic Category I. Figure 2.6.2 shows the ASME Code class for the FPC System piping and components.

The FPC System is located in the Reactor Building.

The FPC System has parameter displays in the main control room for instruments shown on Figure 2.6.2.

The check valves (CVs) shown on Figure 2.6.2 have active safety-related functions to open, close, or both open and close under system pressure, fluid flow, and temperature conditions.

The piping and components of the FPC System at the suction side of the RHR System from the upstream isolation valve have a design pressure of 2.82 MPaG for intersystem LOCA (ISLOCA) conditions.

Inspections, Tests, Analyses and Acceptance Criteria

Table 2.6.2 provides a definition of the inspections, tests and/or analyses, together with associated acceptance criteria, which will be undertaken for the FPC System.

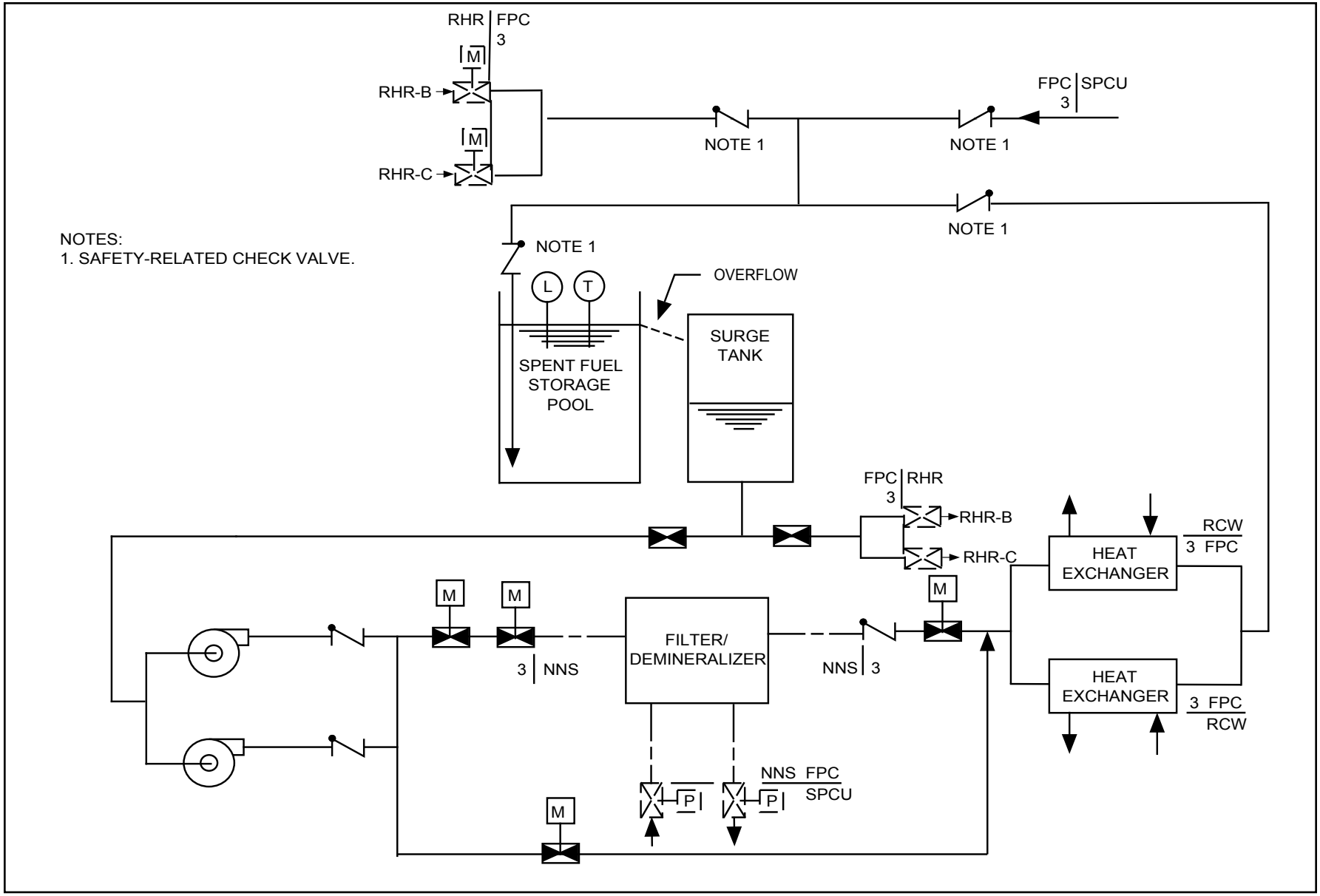

Figure 2.6.2 Fuel Pool Cooling and Cleanup System

Table 2.6.2 Fuel Pool Cooling and Cleanup System

Inspections, Tests, Analyses and Acceptance Criteria		
Design Commitment	**Inspections, Tests, Analyses**	**Acceptance Criteria**
1. The basic configuration of the FPC System is as shown on Figure 2.6.2.	1. Inspection of the as-built system will be conducted.	1. The as-built FPC System conforms with the basic configuration shown on Figure 2.6.2.
2. The ASME Code components of the FPC System retain their pressure boundary integrity under internal pressures that will be experienced during service.	2. A hydrostatic test will be conducted on those Code components of the FPC System required to be hydrostatically tested by the ASME Code.	2. The results of the hydrostatic test of the ASME Code components of the FPC System conform with requirements in the ASME Code, Section III.
3. The safety-related makeup water source for the spent fuel storage pool is provided by the RHR System, which pumps suppression pool water to the FPC System.	3. Tests will conducted on the as-built FPC and RHR Systems by aligning the systems so that the RHR System draws water from the suppression pool and discharges into the spent fuel storage pool.	3. The combined RHR System and FPC System operation transfers water from suppression pool to the spent fuel storage pool.
4. The spent fuel storage pool has no piping connections (inlet, outlet, drains or other piping) located below a point 3m above the top of active fuel located in the spent fuel storage racks.	4. Inspections of the as-built spent fuel storage pool will be conducted.	4. The spent fuel storage pool has no piping connections (inlet, outlet, drains or other piping) located below a point 3m above the top of active fuel located in the spent fuel storage racks.
5. Main control room displays provided for the FPC System are as defined in Section 2.6.2.	5. Inspections will be performed on the main control room displays for the FPC System.	5. Displays exist or can be retrieved in the main control room as defined in Section 2.6.2.
6. CVs designated in Section 2.6.2 as having an active safety-related function open, close, or open and close, under system pressure, fluid flow, and temperature conditions.	6. Tests of installed valves for opening, closing, or both opening and closing, will be conducted under system preoperational pressure, fluid flow, and temperature conditions.	6. Based on the direction of the differential pressure across the valve, each CV opens, close, or both opens and closes depending upon the valve's safety functions.

2.6.3 Suppression Pool Cleanup System

Design Description

The Suppression Pool Cleanup (SPCU) System removes particulates and dissolved impurities from the suppression pool by circulating suppression pool water through the Fuel Pool Cooling (FPC) System water treatment equipment. The SPCU System also provides a source of makeup water to the spent fuel storage pool and the Reactor Building Cooling Water (RCW) System surge tanks using either the suppression pool or condensate storage tank (CST) water via the High Pressure Core Flooder (HPCF) System supply piping. Figure 2.6.3 shows the basic system configuration and scope.

Except for the primary containment penetration and isolation valves, the SPCU System is classified as non-safety-related.

The SPCU System piping and components, as shown on Figure 2.6.3, are classified as Seismic Category I. Figure 2.6.3 shows ASME Code class for the SPCU System piping and components.

The SPCU System is located outside the primary containment in the Reactor Building.

The inboard containment isolation valves are powered from Class 1E Division II, and the outboard containment isolation valve is powered from Class 1E Division I. In the SPCU System, independence is provided between the Class 1E divisions, and also between Class 1E divisions and non-Class 1E equipment.

The main control room has control and open/close status indication for the containment isolation valves.

The safety-related electrical equipment located outside the primary containment in the Reactor Building is qualified for a harsh environment.

The motor-operated valves (MOVs) for containment isolation, shown on Figure 2.6.3 have active safety-related function to close and perform this function under differential pressure, fluid flow, and temperature conditions.

The check valve (CV) for containment isolation shown on Figure 2.6.3, has active safety-related function to close under system pressure, fluid flow, and temperature conditions.

Inspections, Tests, Analyses and Acceptance Criteria

Table 2.6.3 provides definition of inspections, tests, and/or analyses, together with associated acceptance criteria, which will be undertaken for the SPCU System.

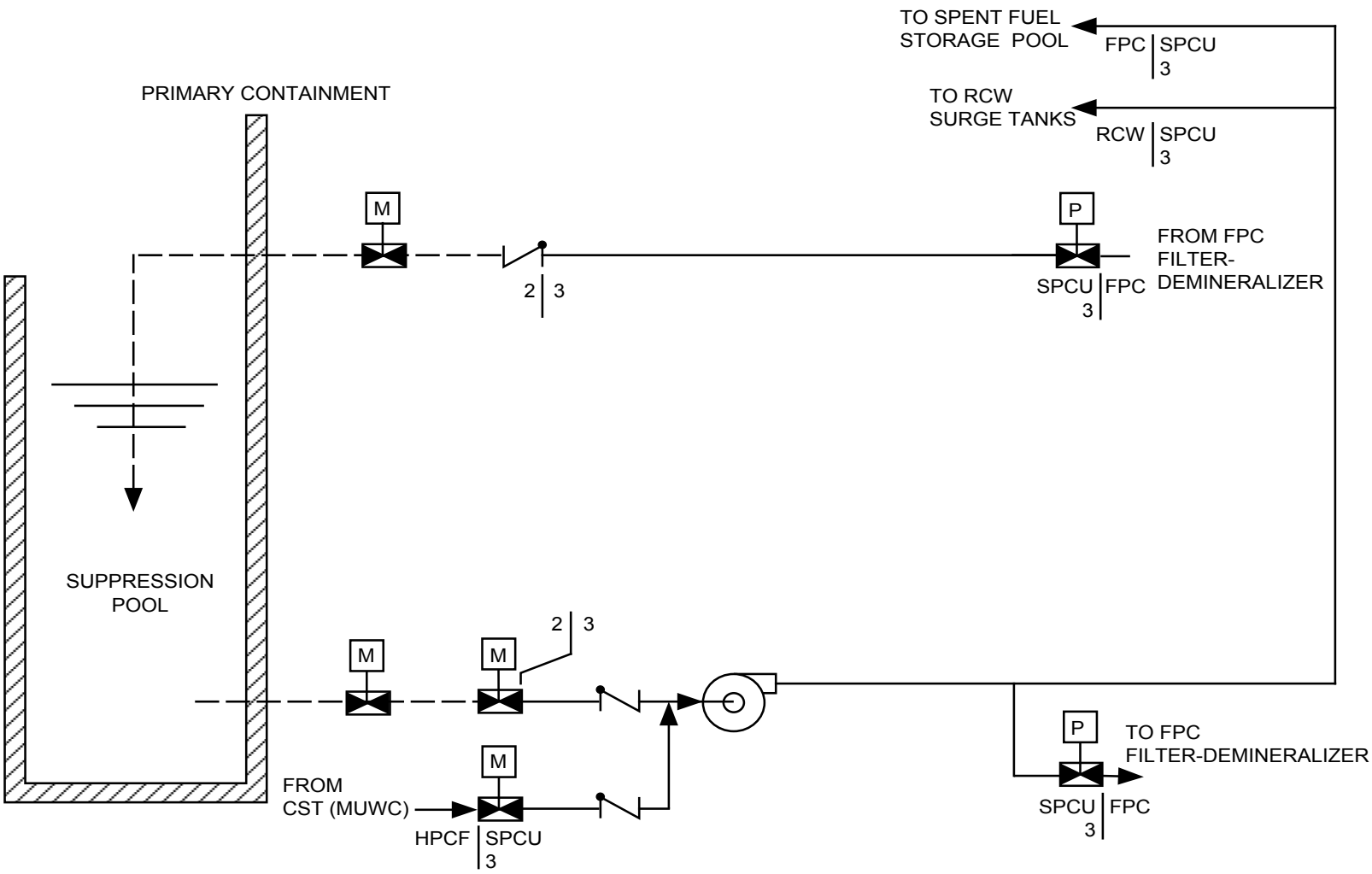

NOTES:
1. THE INBOARD CONTAINMENT ISOLATION VALVES ARE POWERED FROM CLASS 1E DIVISION II AND THE OUTBOARD CONTAINMENT ISOLATION VALVE IS POWERED FROM CLASS 1E DIVISION I.

Figure 2.6.3 Suppression Pool Cleanup System

Table 2.6.3 Suppression Pool Cleanup System

Inspections, Tests, Analyses and Acceptance Criteria		
Design Commitment	**Inspections, Tests, Analyses**	**Acceptance Criteria**
1. The basic configuration of the SPCU System is as shown on Figure 2.6.3.	1. Inspections of the as-built system will be conducted.	1. The as-built SPCU System conforms with the basic configuration shown on Figure 2.6.3.
2. The ASME Code components of the SPCU System retain their pressure boundary integrity under internal pressures that will be experienced during service.	2. A hydrostatic test will be conducted on those Code components of the SPCU System required to be hydrostatically tested by the ASME Code.	2. The results of the hydrostatic test of the ASME Code components of the SPCU System conform with the requirements in the ASME Code Section III.
3. The inboard containment isolation valves are powered from Class 1E Division II, and the outboard containment isolation valve is powered from Class 1E Division I. In the SPCU System, independence is provided between Class 1E divisions, and between Class 1E divisions and non-Class 1E equipment.	3. a. Tests will be conducted in the SPCU System by providing a test signal in only one Class 1E division at a time. b. Inspections of the as-built Class 1E divisions in the SPCU System will be performed.	3. a. The test signal exists only in the Class 1E division under test in the SPCU System. b. In the SPCU System, physical separation or electrical isolation exists between Class 1E divisions. Physical separation or electrical isolation exists between these Class 1E divisions and non-Class 1E equipment.
4. Main control room displays and controls provided for the SPCU System are as defined in Section 2.6.3.	4. Inspections will be conducted on the main control room displays and controls for the SPCU System.	4. Displays and controls exist or can be retrieved in the main control room as defined in Section 2.6.3.
5. a. MOVs designated in Section 2.6.3 as having an active safety-related function close under differential pressure, fluid flow, and temperature conditions.	5. a. Tests of installed valves for closing will be conducted under preoperational differential pressure, fluid flow, and temperature conditions.	5. a. Upon receipt of the actuating signal, each MOV closes.

Table 2.6.3 Suppression Pool Cleanup System (Continued)

Inspections, Tests, Analyses and Acceptance Criteria		
Design Commitment	**Inspections, Tests, Analyses**	**Acceptance Criteria**
b. The CV designated in Section 2.6.3 as having an active safety-related function closes under system pressure, fluid flow, and temperature conditions.	b. Tests of the installed valve for closing will be conducted under system preoperational pressure, fluid flow, and temperature conditions.	b. The CV closes.

2.7.1 Main Control Room Panels

Design Description

The Main Control Room Panels (MCRP) consist of the main control console, the large display panel, the supervisor's console, the auxiliary or back panels and their respective internal wiring.

The MCRP locates and configures the alarms displays and controls for plant systems. Those parts of the MCRP that contain Class 1E equipment are classified as Seismic Category I.

Non-Class 1E and divisional Class 1E control and instrument power is provided for the MCRP. Independence is provided between Class 1E divisions and also between the Class 1E divisions and non-Class 1E equipment.

The MCRP has, as a minimum, the fixed alarms, displays, and controls shown on Table 2.7.1a.

Inspections, Tests, Analyses and Acceptance Criteria

Table 2.7.1a provides a definition of the inspections, tests and/or analyses, together with associated acceptance criteria, which will be undertaken for the MCRP.

Table 2.7.1a Main Control Room Panels Fixed Position Alarms, Displays and Controls

A. Fixed Position Controls		
Manual Scram Initiation Switch (A)	DG (A) Start Switch	Div. I Manual/Auto Main Steamline Isolation Reset Switch
Manual Scram Initiation Switch (B)	DG (B) Start Switch	Div. II Manual/Auto Main Steamline Isolation Reset Switch
Reactor Mode Switch	DG (C) Start Switch	Div. III Manual/Auto Main Steamline Isolation Reset Switch
Div. I Main Steamline Manual Isolation Switch	RCIC System Standby Mode Initiation Switch	Div. IV Manual/Auto Main Steamline Isolation Reset Switch
Div. II Main Steamline Manual Isolation Switch	Condensate Pump Standby Mode Initiation Switches	Primary Containment Div. I Isolation Reset Switch
Div. III Main Steamline Manual Isolation Switch	Reactor Feedpump Standby Mode Initiation Switches	Primary Containment Div. II Isolation Reset Switch
Div. IV Main Steamline Manual Isolation Switch	Condensate Pump Startup Mode Initiation Switches	Primary Containment Div. III Isolation Reset Switch
Primary Containment Div. I Manual Isolation Switch	Reactor Feedpump Startup Mode Initiation Switches	RHR (A) Shutdown Cooling Mode Initiation Switch
Primary Containment Div. II Manual Isolation Switch	SLC (A) Pump Control Switch	RHR (B) Shutdown Cooling Mode Initiation Switch
Primary Containment Div. III Manual Isolation Switch	SLC (B) Pump Control Switch	RHR (C) Shutdown Cooling Mode Initiation Switch
RCIC Initiation Switch	ADS (A) Inhibit Switch	ARI (A) Manual Initiation Switch
HPCF (B) Initiation Switch	ADS (B) Inhibit Switch	ARI (B) Manual Initiation Switch
HPCF (C) Initiation Switch	RHR (A) Standby Mode Switch	Recirculation Runback Initiation Switch (A)
RHR (A) Initiation Switch	RHR (B) Standby Mode Switch	Recirculation Runback Initiation Switch (B)
RHR (B) Initiation Switch	RHR (C) Standby Mode Switch	RIP Start/Stop Control Switch (10)
RHR (C) Initiation Switch	Main Steam Isolation Valve Control Switch (8)	ARI (A) Logic Reset Switch

Table 2.7.1a Main Control Room Panels Fixed Position Alarms, Displays and Controls (Continued)

A. Fixed Position Controls (Continued)		
ARI (B) Logic Reset Switch	RHR (A) Suppression Pool Cooling Mode Initiation Switch	Div. II ADS Manual ADS Channel 2 Initiation Switch
CRD Charging Water Pressure Low Scram Bypass Switch (A)	RHR (B) Suppression Pool Cooling Mode Initiation Switch	RCIC Div. I Isolation Logic Reset Switch
CRD Charging Water Pressure Low Scram Bypass Switch (B)	RHR (C) Suppression Pool Cooling Mode Initiation Switch	RCIC Div. II Isolation Logic Reset Switch
CRD Charging Water Pressure Low Scram Bypass Switch (C)	RHR (B) Primary Containment Vessel Spray Mode Initiation Switch	RCIC Inboard Isolation Control Switch
CRD Charging Water Pressure Low Scram Bypass Switch (D)	RHR (C) Primary Containment Vessel Spray Mode Initiation Switch	RCIC Outboard Isolation Control Switch
Manual Scram Reset Switch	SGTS (B) Initiation Switch	Fire Protection System Motor Pump Control Switch
RPS Div. I Trip Reset Switch	SGTS (C) Initiation Switch	Fire Protection System Diesel Pump Control Switch
RPS Div. II Trip Reset Switch	Div. I Manual ADS Channel 1 Initiation Switch	FCS (B) Control Switch
RPS Div. III Trip Reset Switch	Div. I Manual ADS Channel 2 Initiation Switch	FCS (C) Control Switch
RPS Div. IV Trip Reset Switch	Div. II Manual ADS Channel 1 Initiation Switch	

Table 2.7.1a Main Control Room Panels Fixed Position Alarms, Displays and Controls (Continued)

B. Fixed Position Displays		
RPV Water Level	RCIC Flow	SRV Positions
RCIC Turbine Speed	RCIC Injection Valve Status	Suppression Pool Level
Wetwell Pressure	HPCF (B) Injection Valve Status	Main Steamline Flow
Suppression Pool Bulk Average Temperature	HPCF (C) Injection valve status	SLC Boron Tank Water Level
HPCF (B) Flow	RHR (A) Flow	Recirculation Pump Speeds
HPCF (C) Flow	RHR (A) Injection Valve Status	Average Drywell Temperature
RPV Pressure	RHR (B) Flow	Wetwell Hydrogen Concentration Level
Drywell Pressure	RHR (B) Injection Valve Status	Drywell Hydrogen Concentration Level
Reactor Power Level, (Neutron Flux, APRM)	RHR (C) Flow	Drywell Oxygen Concentration
Reactor Power Level (SRNM)	RHR (C) Injection Valve Status	Wetwell Oxygen Concentration
Reactor Thermal Power	Emergency Diesel Generator (A) Operating Status	FCS (B) Operating Status
MSIV Position Status (Inboard And Outboard Valves)	Emergency Diesel Generator (B) Operating Status	FCS (C) Operating Status
Reactor Mode Switch Mode Indications	Emergency Diesel Generator (C) Operating Status	Main Stack Radiation Level
Main Steamline Radiation	Primary Containment Water Level	Time
Scram Solenoid Lights (8) Status	Condensate Storage Tank Water Level	Drywell Radiation Level
Manual Scram Switch (A) Indicating Light Status	SLC Pump (A) Discharge Pressure	Wetwell Radiation Level
Manual Scram Switch (B) Indicating Light Status	SLC Pump (B) Discharge Pressure	
RPV Isolation Status Display	Main Condenser Pressure	

Table 2.7.1a Main Control Room Panels Fixed Position Alarms, Displays and Controls (Continued)

C. Fixed Position Alarms *		
Indicated RPV Water Level Abnormal	RPV Water Level Low (ECCS Initiation)	CAMS H_2/O_2 Level High
RPV Water Level Low (Scram Level)	Control Rod Not Inserted To/Beyond MSBWP	CAMS (A) System Abnormal
RPV Pressure High	RPV Water Level High	CAMS (B) System Abnormal
Drywell Pressure High	Fire Protection System Status	Reactor Building ΔP Low
Neutron Flux High–High	ADS (A) Logic Initiated	Area Temperature High
Neutron Monitoring System Inoperative	ADS (B) Logic Initiated	Area HVAC ΔT High
MSIV Closure	SRV Open	R/B HVAC Exhaust Radiation High
CRD Charging Water Pressure Low	Main Steam Line Flow High	Reactor Building Area Radiation High
Rapid Core Flow Decrease	HPIN (A) System Status	Reactor Building Floor Drain Sump Water Level High–High
Main Turbine Trip	HPIN (B) System Status	R/B HVAC System Status
Main Generator Trip	Leak Detection Isolation	Stack Radioactivity High
Main Steam Line Radiation High	RWCU System Status	RCW Radioactivity High
Reactor Scram	Reactor Period Short	Radwaste Effluent Radioactivity High
RPV Low Level Isolation Incomplete (Scram Water Level)	ADS Div. I Inhibited/Auto Out Of Service	Turbine Building Ventilation System (TBVS) Status
RPV Low Level Isolation Incomplete (ATWS Scram Level)	ADS Div. II Inhibited/Auto Out Of Service	Radiation Monitor High
RPV Low Level/Drywell Pressure High Isolation Incomplete	Suppression Pool Bulk Average Temperature High	RCIC System Status
RPV Water Level Low (ATWS Scram Level)	Drywell Average Temperature High	HPCF (B) System Status
RPV Water Level Low (HPCF Initiation Level)	Suppression Pool Water Level High/Low	HPCF (C) System Status

* Functional Definitions

Table 2.7.1b Main Control Room Panels

Inspections, Tests, Analyses and Acceptance Criteria		
Design Commitment	**Inspections, Tests, Analyses**	**Acceptance Criteria**
1. Equipment comprising the MCRP, as defined in Section 2.7.1, is available in the MCR.	1. Inspections of the as-built system will be conducted.	1. The as-built MCRP conforms with the description in Section 2.7.1.
2. Non-Class 1E and divisional Class 1E control and instrument power is provided for the MCRP. In the MCRP, independence is provided between Class 1E divisions, and between Class 1E divisions and non-Class 1E equipment.	2. a. Tests will be conducted on the MCRP by providing a test signal to only one Class 1E division at a time. b. Inspections of the as-built Class 1E divisions in the MCRP will be conducted.	2. a. The test signal exists only in Class 1E division under test in the MCRP. b. In the MCRP, physical separation or electrical isolation exists between Class 1E divisions. Physical separation or electrical isolation exists between these Class 1E divisions and non-Class 1E equipment.

2.7.2 Radioactive Waste Control Panels

No entry. Covered in Section 2.9.1.

2.7.3 Local Control Panels

Design Description

The Local Control Panels (LCP) consist of safety-related and non-safety-related local panels, control boxes, instrument racks and their respective internal wiring. LCPs function as protective housings and support structures for electrical and electronic equipment and facilitate local control operation.

LCPs that support safety-related equipment are classified as safety-related and Seismic Category I. Safety-related LCPs are located in Seismic Category I structures and in their divisional areas.

Safety-related LCPs are powered from their respective Class 1E divisions. Independence is provided between Class 1E divisions, and also between Class 1E divisions and non-Class 1E equipment.

LCPs which are located in areas designated as harsh environment areas are qualified for harsh environments.

Inspections, Tests, Analyses and Acceptance Criteria

Table 2.7.3 provides a definition of the inspections, tests, and/or analyses, together with associated acceptance criteria, which will be undertaken for the LCP.

Table 2.7.3 Local Control Panels

Inspections, Tests, Analyses and Acceptance Criteria		
Design Commitment	**Inspections, Tests, Analyses**	**Acceptance Criteria**
1. The basic configuration of the LCPs is described in Section 2.7.3.	1. Inspections of the as-built system will be conducted.	1. The as-built LCPs conform with the basic configuration described in Section 2.7.3.
2. Safety-related LCPs are powered from their respective Class 1E divisions. Independence is provided between Class 1E divisions and between Class 1E divisions and non-Class 1E equipment.	2. a. Tests will be conducted in the LCPs by providing a test signal to only one Class 1E division at a time. b. Inspections of the as-built Class 1E divisions in the LCPs will be conducted.	2. a. A test signal exists in only the Class 1E division under test in the LCPs. b. In the LCPs, physical separation or electrical isolation exists between as-built Class 1E divisions. Physical separation or electrical isolation exists between these Class 1E divisions and non-Class 1E equipment.

2.7.4 Instrument Racks

No entry. Covered in Section 2.7.3.

2.7.5 Multiplexing System

Design Description

The Multiplexing System consists of the essential multiplexing system (EMS) and the non-essential multiplexing system (NEMS).

Essential Multiplexing System

The EMS provides distributed data acquisition and control networks that support the control and monitoring of the plant protection and safety systems. The EMS comprises electrical devices and circuitry, including remote multiplexing units (RMUs), transmission lines, and control room multiplexing units (CMUs) that acquire data from remote process sensors and discrete devices located within the plant, and then multiplex the data to Safety System Logic and Control (SSLC) equipment in the main control room area. SSLC operates on the input signals according to the required system logic functions, and transmits multiplexed control signals to RMUs outside of the main control room. The RMUs distribute the signals to the final actuators of the supported systems' driven equipment. In addition to SSLC, the EMS also supports the data acquisition and transmission of other safety-related signals used for display and recording.

The EMS is classified as a Class 1E safety-related system.

There are four divisions of EMS equipment, with no direct interconnections among divisions. Each division of equipment has independent control of data acquisition and multiplexing. System timing is asynchronous among the four divisions, so that timing and clock signals in any one division only influence data transmission functions within that division. EMS uses a deterministic communications protocol; i.e., sensor signals and control data are guaranteed network access on an equal basis without interference from other signals or network traffic.

Class 1E analog and discrete sensors of the plant safety systems are connected to RMUs outside the main control room. These RMUs perform signal conditioning, analog-to-digital conversion for continuous process inputs, change-of-state detection for discrete inputs, and data message formatting prior to signal transmission. The RMUs are limited to acquisition of sensor data and the output of control signals. Trip decisions and other control logic functions are performed in SSLC processors in the main control room area. The RMUs transmit serial, time-multiplexed data streams representing the identity and status of the plant variables to the CMUs. Each division of EMS has two transmission lines interconnecting the RMUs and CMUs of that division.

The CMUs demultiplex the data and condition the signals for use in either the controllers of SSLC or in monitoring systems. After the input data is processed in SSLC, the resulting trip logic decisions are transmitted (for engineered safety features (ESF)

functions only) as a serial, time-multiplexed data stream to the CMUs, which acquire the data and transmit it via EMS to RMUs in the local areas, where the digital data is converted to signals for actuation of control devices.

Data communications from EMS to non-safety-related systems or devices for control or display purposes use an isolating transmission medium and buffering devices. Data cannot be transmitted from the non-safety-related side to EMS.

The EMS features automatic self-test and automatically reconfigures after detecting failure of one channel (either a cable break or device failure) within a division. The system returns to normal operation after reconfiguration with no interruption of data communication. If an RMU or CMU fails, that unit is automatically removed from service. Self-test runs continuously and faults are indicated in the main control room. Loss of data communications in a division of EMS does not cause transient or erroneous data to occur at system outputs.

Each of the four EMS divisions is powered from its respective division's Class 1E DC division. Independence is provided between Class 1E divisions, and also between Class 1E divisions and non-Class 1E equipment.

The EMS is located in the Reactor Building and the Control Building.

EMS has the following alarms and displays in the main control room:

(1) Inoperative indication for each RMU and CMU.

(2) Channel availability (Channel 1 or 2) for each EMS division.

(3) Display and control of data transmission parameters and off-line self-test functions.

Non-Essential Multiplexing System

The NEMS provides data communications for non-safety-related plant functions. NEMS acquires non-safety-related data from process sensors and discrete devices located throughout the plant and transmits these signals to the non-safety-related control systems for control function processing. Equipment status data is transmitted to operator control panels for monitoring alarm annunciation and to the plant computer systems for data recording and displays. The NEMS also transmits processed, non-safety-related, control signals to actuator circuits to activate valves, motor drives, alarms, monitors and indicators of the interfacing systems. The electrical devices of the NEMS consist of remote multiplexing units (RMUs), transmission lines, and control room multiplexing units (CMUs).

NEMS is redundant to the same number of channels as the supported systems that require multiplexing. Thus, a portion of NEMS is dual redundant if a supported system

is dual redundant, but is triply redundant if a supported system has that level of redundancy.

The NEMS is classified as non-safety-related, and is powered from non-Class 1E UPS.

Inspections, Tests, Analyses and Acceptance Criteria

Table 2.7.5 provides a definition of the visual inspections, tests and analyses, together with associated acceptance criteria, which will be undertaken for the EMS and NEMS.

Table 2.7.5 Essential Multiplexing System

Inspections, Tests, Analyses and Acceptance Criteria		
Design Commitment	**Inspections, Tests, Analyses**	**Acceptance Criteria**
1. The equipment comprising the Multiplexing System is defined in Section 2.7.5.	1. Inspection of the as-built EMS and NEMS will be conducted.	1. The as-built EMS and NEMS conform with the description in Section 2.7.5.
2. EMS uses a deterministic communications protocol.	2. Tests of the EMS communications protocol will be conducted in a test facility.	2. EMS uses a deterministic communications protocol.
3. Data communications from EMS to non-safety-related systems or devices uses an isolating transmission medium and buffering devices. Data cannot be transmitted from the non-safety-related side to EMS.	3. Tests on the EMS data communications will be conducted in a test facility.	3. EMS communications only permits data transfer from the EMS to the non-safety-related systems or devices. Control or timing signals are not exchanged between EMS and non-safety-related systems or devices.
4. The EMS features automatic self-test and automatically reconfigures after detecting failure of one channel (either a cable break or device failure) within a division. The system returns to normal operation after reconfiguration with no interruption of data communication.	4. Tests will be conducted on each as-built EMS division by individually simulating the following, while simultaneously transmitting and monitoring test data streams: a. Single cable break. b. Loss of one RMU. c. Loss of one CMU.	4. There is no loss of EMS data communication as a result of the fault. Fault occurrence is displayed in the main control room.
5. Loss of data communications in a division of EMS does not cause transient or erroneous data to occur at system outputs.	5. Tests will be performed in one division of EMS at a time. While simulated input signals are being transmitted cable segments in redundant paths will be disconnected and EMS outputs monitored.	5. Data communication is lost without generation of transient or erroneous signals.

Table 2.7.5 Essential Multiplexing System (Continued)

Inspections, Tests, Analyses and Acceptance Criteria		
Design Commitment	**Inspections, Tests, Analyses**	**Acceptance Criteria**
6. Each of four EMS divisions is powered from its respective division's Class 1E DC division. In the EMS, independence is provided between Class 1E divisions, and between Class 1E divisions and non-Class 1E equipment.	6. a. Tests will be performed on EMS by providing a test signal in only one Class 1E division at a time. b. Inspection of the as-installed Class 1E divisions in the EMS will be performed.	6. a. The test signal exists only in the Class 1E division under test in the EMS. b. In the EMS, physical separation or electrical isolation exists between Class 1E divisions. Physical separation or electrical isolation exists between these Class 1E divisions and non-Class 1E equipment.
7. Main control room alarms and displays provided for the EMS are as defined in Section 2.7.5.	7. Inspections will be performed on the main control room alarms and displays for the EMS.	7. Alarms and displays exist or can be retrieved in the main control room as defined in Section 2.7.5.

2.7.6 Local Control Boxes

No entry. Covered in Section 2.7.3.

2.8.1 Nuclear Fuel

Design Description

The fuel assembly is designed to ensure that possible fuel damage would not result in the release of radioactive materials in excess of prescribed limits. The fuel assembly is comprised of the fuel bundle, channel and channel fastener. The fuel bundle is comprised of fuel rods, water rods, fuel rods containing burnable neutron absorber, spacers, springs and assembly end fittings.

The following is a summary of the principal design requirements which must be met by the fuel and is evaluated using methods and criteria to assure that:

(1) Fuel rod failure is predicted to not occur as a result of normal operation and anticipated operational occurrences.

(2) Control rod insertion will not be prevented as a result of normal operation, anticipated operational occurrences or postulated accident.

(3) The number of fuel rod failures will not be underestimated for postulated accidents.

(4) Coolability will be maintained for all design basis events, including seismic and LOCA events.

(5) Specified acceptable fuel design limits (thermal and mechanical design limits) will not be exceeded during any condition of normal operation, including the effects of anticipated operational occurrences.

(6) In the power operating ranges, the prompt inherent nuclear feedback characteristics will tend to compensate for a rapid increase in reactivity.

(7) The reactor core and associated coolant, control and protection systems will be designed to assure that power oscillations which can result in conditions exceeding specified acceptable fuel design limits are not possible or can be reliably and readily detected and suppressed.

2.8.2 Fuel Channel

Design Description

The fuel channels are zirconium-based (or equivalent) and preclude cross-flow in the core region. These channels form the flow path for bundle coolant flow, provide surfaces for control rod guidance, provide structural stiffness to the bundle during lateral loadings, transmit seismic loadings to the top guide and fuel support castings, and provide a heat sink during loss-of-coolant accident (LOCA).

The following is a summary of the principal design criteria which are met by the fuel channels:

(1) During any design basis events including the mechanical loading from safe shutdown earthquake event combined with LOCA event, fuel channel damage will not be so severe as to prevent control rod insertion when it is required.

(2) Coolability will be maintained for all design basis events.

(3) Channel bowing will not cause specified acceptable fuel design limits to be exceeded during normal operation and anticipated operational occurrences.

2.8.3 Control Rod

Design Description

Control rods in the reactor perform the functions of power distribution shaping, reactivity control, and scram reactivity insertion for safety shutdown response and have the following design features:

(1) A cruciform cross-sectional envelope shape.

(2) A coupling at the bottom for attachment to the control rod drive.

(3) Contain neutron absorbing materials.

The following is a summary of the principal design criteria which are met by the control rod:

(1) The control rod stresses, strains, and cumulative fatigue will be evaluated to not exceed the ultimate stress or strain of the material.

(2) The control rod will be evaluated to be capable of insertion into the core during design basis modes of operation including safe shutdown earthquake event combined with LOCA event.

(3) The material of the control rod will be compatible with the reactor environment.

(4) The reactivity worth of the control rods will be included in the plant core analyses, and will provide, under conditions of normal operation (including anticipated operational occurrences), appropriate margin for malfunctions such as two stuck rods (associated with a given accumulator), or accidental control rod withdrawal, without exceeding specified acceptable fuel design limits.

2.8.4 Loose Parts Monitoring System

Design Description

The Loose Parts Monitoring System (LPMS) monitors the reactor pressure vessel (RPV) for indications of loose metallic parts within the reactor pressure vessel. The LPMS detects structure borne sound that can indicate the presence of loose parts impacting against the reactor pressure vessel and internals. The system alarms when sensor signal characteristics exceeds preset limits.

The LPMS consists of sensors, cables, signal conditioning equipment, alarming monitors, signal analysis and data acquisition equipment. The LPMS processes signals from multiple sensors mounted on the external surfaces of the reactor coolant pressure boundary. The LPMS is classified as non-safety-related.

The LPMS has provisions for both automatic and manual startup of data acquistion equipment with automatic activation in the event the preset alert level is reached or exceeded. The system also initiates an alarm in the main control room when an alert condition is reached.

The LPMS electronic components located inside the primary containment perform their function following all seismic events which do not require plant shutdown.

Inspections, Tests, Analyses and Acceptance Criteria

Tables 2.8.4 provides a definition of the inspections, tests and/or analyses, together with associated acceptance criteria, which will be undertaken for LPMS.

Table 2.8.4 Loose Parts Monitoring System

Inspections, Tests, Analyses and Acceptance Criteria		
Design Commitment	**Inspections, Tests, Analyses**	**Acceptance Criteria**
1. Equipment comprising the LPMS is defined in Section 2.8.4.	1. Inspection of the as-built system will be conducted.	1. The as-built LPMS conforms with the description in Section 2.8.4.
2. The LPMS monitors the RPV for indication of loose metallic parts.	2. Tests will be conducted on the as-built LPMS.	2. The LPMS sensitivity, without the background noise associated with plant operation, is such that it can detect a metallic loose part that weighs from 0.11 kg to 13.6 kg and impacts with a maximum kinetic energy of 0.68 joules on the inside surface of the RPV within 0.91m of a sensor.
3. Main control room alarms provided for the LPMS are defined in Section 2.8.4.	3. Inspections will be performed on the main control room alarms for the LPMS.	3. Alarms exist or can be retrieved in the main control room as defined in Section 2.8.4.
4. The LPMS electronic components located inside the primary containment perform their function following all seismic events which do not require plant shutdown.	4. Analyses will be performed or tests will be conducted on the seismic capability of the LPMS electronic components located in the primary containment.	4. An analysis or test report exists which concludes that the LPMS electronic components located inside the primary containment perform their function following all seismic events which do not require plant shutdown.

2.9.1 Radwaste System

Design Description

The Radwaste (RW) System consists of a liquid waste system, a solid waste system and a radioactive drain transfer system . The liquid waste system includes primary containment penetrations, and inboard and outboard motor-operated isolation valves for the high conductivity and low conductivity waste drains from the lower drywell. The liquid waste system collects, treats, monitors, and either recycles treated radioactive liquid wastes within the plant or discharges them to the environs. The solid waste system sorts, processes, monitors and packages processed solid radwastes for shipment to an offsite disposal facility.

The RW System is classified as non-safety-related with the exception of the primary containment isolation function.

The primary containment penetrations and isolation valves are classified as Seismic Category I and ASME Code Class 2. The back flow check valves in the emergency core cooling system (ECCS) equipment room sumps are classified as Seismic Category I.

The RW System processing equipment is located in the Radwaste Building.

The inboard containment isolation valves are powered from Class 1E Division II, and the outboard isolation valves are powered from Class 1E Division I. In the RW System, independence is provided between Class 1E divisions, and also between the Class 1E divisions and non-Class 1E equipment.

The main control room has control and open/close status indications for the primary containment isolation valves.

The safety-related electrical equipment that provides containment isolation, located in the primary containment and the Reactor Building, is qualified for a harsh environment.

The primary containment isolation motor-operated valves (MOVs) have active safety-related function to close and perform these functions under differential pressure, fluid flow, and temperature conditions.

The liquid waste system has one discharge line which has a radiation monitor. Discharge flow is terminated on receipt of a high radiation signal from this monitor.

The radioactive drain transfer system in each divisional area of the ECCS pump rooms and the Control Building are physically separated from drains in the other divisions. Figures 2.9.1a and 2.9.1b show the basic system configuration and scope.

Inspections, Tests, Analyses and Acceptance Criteria

Table 2.9.1 provides a definition of the inspections, tests, and/or analyses, together with associated acceptance criteria, which will be undertaken for the Radwaste System.

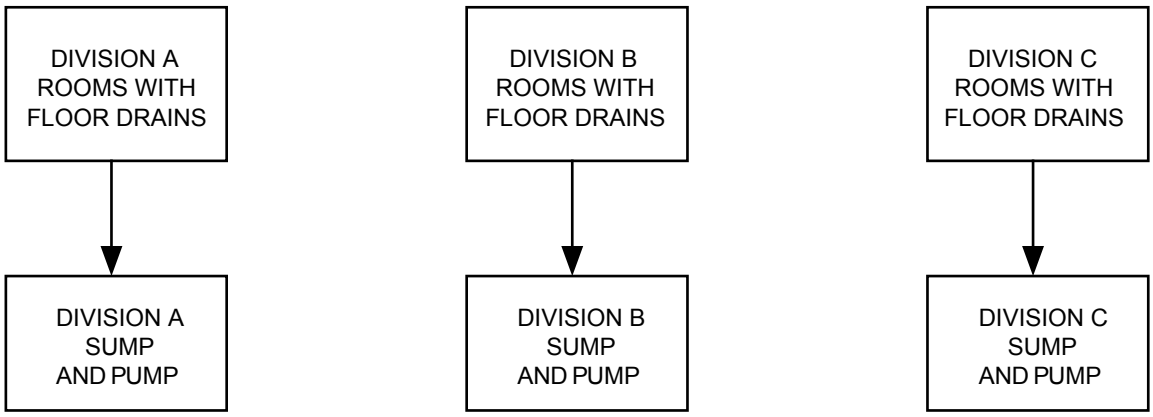

CONTROL BUILDING

NOTES:
1. THE SYSTEM HAS NO VALVES, PUMPS, OR OTHER ACTIVE COMPONENTS IN THE DRAINAGE PATHS.

Figure 2.9.1a Radioactive Drain Transfer System

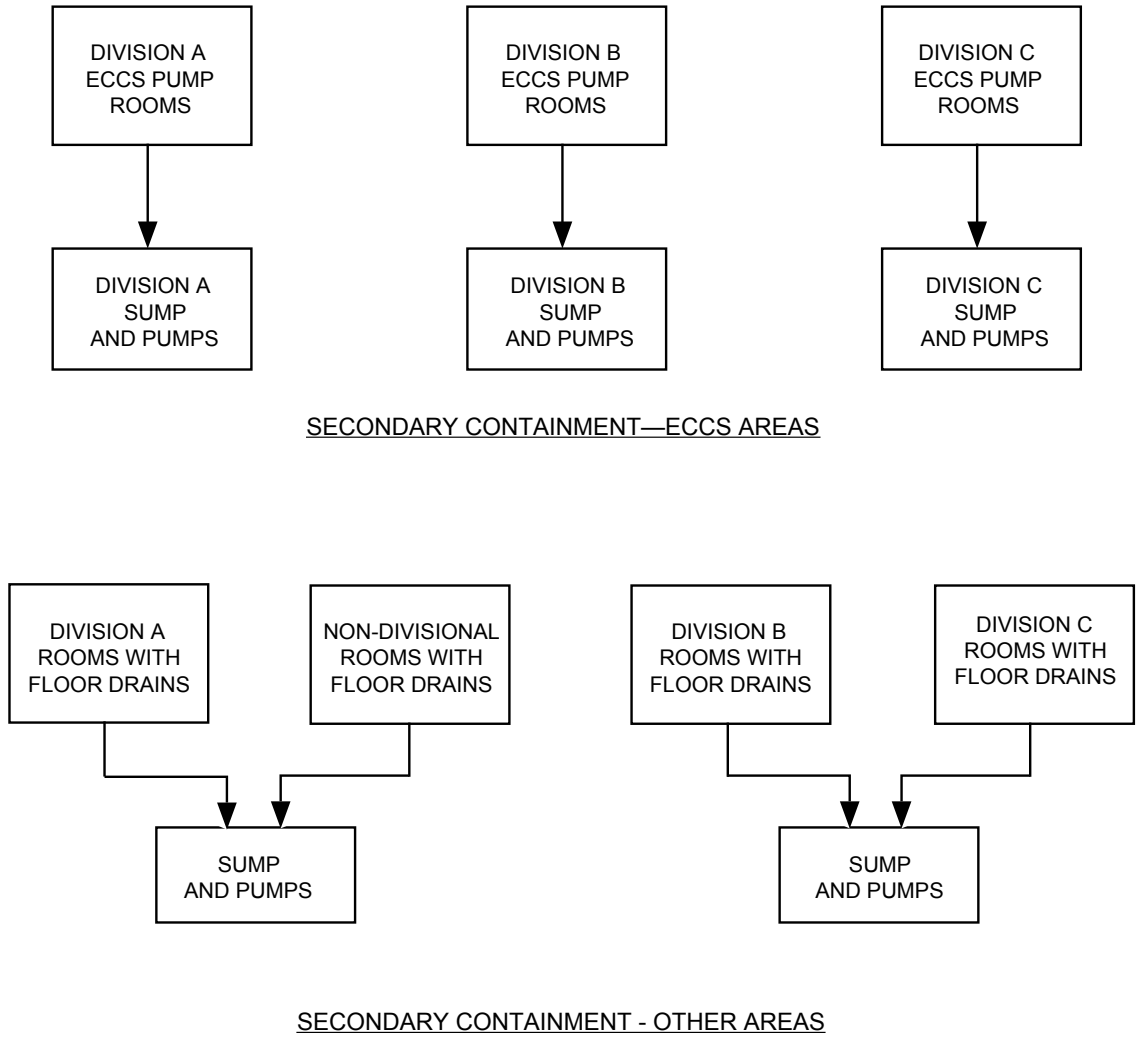

NOTES:
1. THE SYSTEM HAS NO VALVES, PUMPS, OR OTHER ACTIVE COMPONENTS IN THE DRAINAGE PATHS.

Figure 2.9.1b Radioactive Drain Transfer System

Table 2.9.1 Radwaste System

Inspections, Tests, Analyses and Acceptance Criteria		
Design Commitment	**Inspections, Tests, Analyses**	**Acceptance Criteria**
1. The basic configuration for the RW System is described in Section 2.9.1.	1. Inspection of the as-built system will be conducted.	1. The as-built RW System conforms with the basic configuration described in Section 2.9.1.
2. The ASME Code components of the RW System retain their pressure boundary integrity under internal pressures that will be experienced during service.	2. A hydrostatic test will be conducted on those Code components of the RW System required to be hydrostatically tested by the ASME Code.	2. The results of the hydrostatic test of the ASME Code components of the RW System conform with the requirements in the ASME Code, Section III.
3. The inboard containment isolation valves are powered from Class 1E Division II, and the outboard isolation valves are powered from Class 1E Division I. In the RW System, independence is provided between Class 1E divisions and non-Class 1E equipment.	3. a. Tests will be performed on the RW System by providing a test signal in only one Class 1E division at a time. b. Inspection of the as-installed Class 1E divisions in the RW System will be performed.	3. a. The test signal exists only in the Class 1E division under test in the RW System. b. In the RW System, physical separation or electrical isolation exists between Class 1E divisions. Physical separation or electrical isolation exists between these Class 1E divisions and non-Class 1E equipment.
4. Main control room displays and controls provided for the RW System are as defined in Section 2.9.1.	4. Inspections will be performed on the main control room displays and controls for the RW System.	4. Displays and controls exist or can be retrieved in the main control room as defined in Section 2.9.1.
5. MOVs designated in Section 2.9.1 as having an active safety-related function close under differential pressure, fluid flow, and temperature conditions.	5. Tests of installed valves for closing will be conducted under preoperational differential pressure, fluid flow, and temperature conditions.	5. Upon receipt of the actuating signal, each MOV closes.
6. The liquid waste system has one discharge line which has a radiation monitor. Discharge flow is terminated on receipt of a high radiation signal from this monitor.	6. Tests will be conducted on the as-built liquid waste system using a simulated high radiation signal.	6. The discharge flow terminates upon receipt of a simulated high radiation signal.

Table 2.9.1 Radwaste System (Continued)

Inspections, Tests, Analyses and Acceptance Criteria		
Design Commitment	**Inspections, Tests, Analyses**	**Acceptance Criteria**
7. The radioactive drain transfer system in each divisional area of the ECCS pump rooms and the Control Building are physically separated from drains in the other divisions.	7. Tests will be conducted on the as-built system by individually pressuring each divisional area drains with water and observing other divisional area drains for interdivisional leakage.	7. No interconnection exist (i.e. no water leakage in to other divisions not being tested).

2.10.1 Turbine Main Steam System

Design Description

The Turbine Main Steam (MS) System, as shown in Figure 2.10.1, supplies steam generated in the reactor to the turbine, steam auxiliaries and turbine bypass valves. The MS boundaries are shown in Figure 2.10.1. The MS System does not include the seismic interface restraint nor main turbine stop or bypass valves.

The MS System:

(1) Accommodates operational stresses such as internal pressure and dynamic loads without failures.

(2) Provides a seismically analyzed fission product leakage path to the main condenser.

(3) Has suitable access to permit in-service testing and inspections.

(4) Closes the steam auxiliary (SA) valve(s) on a main steam isolation valve (MSIV) isolation signal. These valves fail closed on loss of electrical power to the valve actuating solenoid or on loss of pneumatic pressure.

The MS System main steam piping consists of four lines from the seismic interface restraint to the main turbine stop valves. The header arrangement upstream of the turbine stop valves allows the valves to be tested on-line and also supplies steam to the power cycle auxiliaries.

The MS System is classified as non-safety-related. However, the MS System is analyzed, fabricated and examined to ASME Code Class 2 requirements, and classified as non-Seismic Category I. Inservice inspection shall be performed in accordance with ASME Section XI requirements for Code Class 2 piping. ASME authorized nuclear inspector and ASME Code stamping is not required.

MS piping, including the steam auxiliary valve(s), from the seismic interface restraint to the main stop and main turbine bypass valves is analyzed to demonstrate structural integrity under safe shutdown earthquake (SSE) loading conditions.

The MS System is located in the steam tunnel and Turbine Building.

Inspections, Tests, Analyses and Acceptance Criteria

Table 2.10.1 provides a definition of the inspections, tests, and/or analyses, together with associated acceptance criteria, which will be undertaken for the MS System.

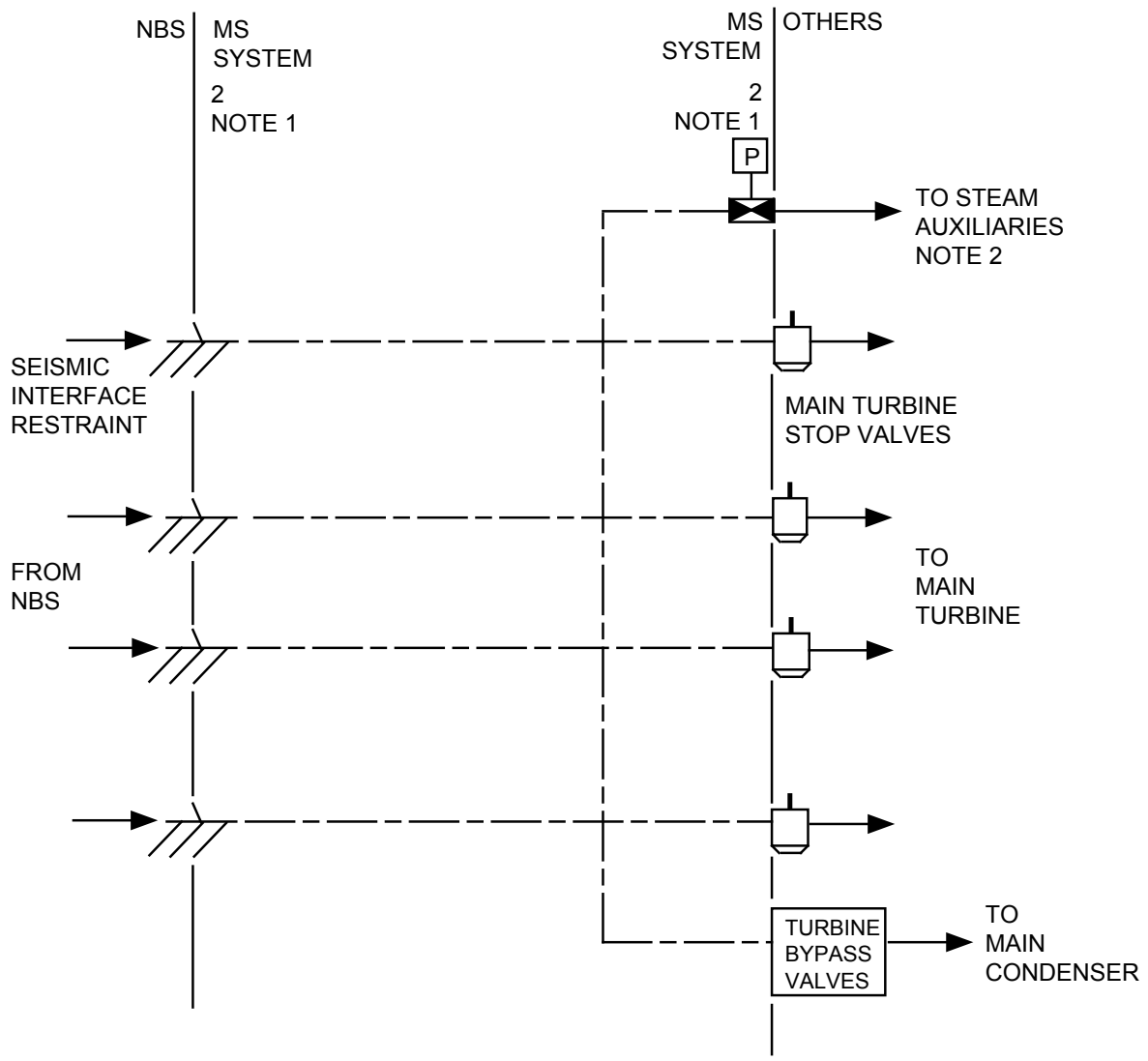

NOTES:
1. AS MODIFIED PER DESIGN DESCRIPTION.
2. MULTIPLE LINES MAY BE USED.
   ISOLATION PROVISIONS ARE REQUIRED
   FOR EACH STEAM AUXILIARY LINE.

Figure 2.10.1 Turbine Main Steam System

Table 2.10.1 Main Steam System

Inspections, Tests, Analyses and Acceptance Criteria		
Design Commitment	**Inspections, Tests, Analyses**	**Acceptance Criteria**
1. The basic configuration of the MS System is as shown on Figure 2.10.1.	1. Inspections of the as-built system will be conducted.	1. The as-built MS System conforms with the basic configuration shown in Figure 2.10.1.
2. The ASME Code components of the MS System retain their pressure boundary integrity under internal pressures that will be experienced during service.	2. A hydrostatic test will be conducted on those Code components of the MS System required to be hydrostatically tested by the ASME Code.	2. The results of the hydrostatic test of the ASME Code components of the MS System conform with the requirements in the ASME Code, Section III.
3. Upon receipt of an MSIV closure signal, the SA valve(s) close(s).	3. Using simulated MSIV closure signals tests will be performed on the SA valves.	3. The SA valve(s) close(s) following receipt of a simulated MSIV closure signal.
4. The SA valve(s) fail(s) closed on loss of electrical power to the valve actuating solenoid or on loss of pneumatic pressure. The pneumatically operated SA valve(s) close(s) when either electrical power to the valve actuating solenoid is lost or pneumatic pressure to the valve(s) is lost.	4. Test will be performed on SA valves.	4. The SA valve(s) close(s) on loss of electrical power to the valve actuating solenoid or on loss of pneumatic pressure.
5. MS piping, including the SA valve(s) from the seismic interface restraint to the main stop and main turbine bypass valves are analyzed to demonstrate structural integrity under SSE loading conditions.	5. A seismic analysis of the as-built MS piping and SA valve(s) will be performed.	5. An analysis report exists which concludes that the as-built MS piping and SA valve(s) can withstand a SSE without loss of structural integrity.

2.10.2 Condensate Feedwater and Condensate Air Extraction System

The Condensate Feedwater and Condensate Air Extraction (CFCAE) System consists of two subsystems: the Condensate and Feedwater System (CFS) and the Main Condenser Evacuation System (MCES).

Design Description

Condensate and Feedwater System

The function of the CFS is to receive condensate from the condenser hotwells, supply condensate to the Condensate Purification System (CPS), and deliver feedwater to the reactor. Condensate is pumped from the main condenser hotwell by the condensate pumps, passes through the low pressure feedwater heaters to the feedwater pumps, and then is pumped through the high pressure heaters to the reactor. Figure 2.10.2a shows the basic system configuration. The CFS boundaries extend from the main condenser outlet to (but not including) the seismic interface restraint outside the containment.

The CFS is classified as non-safety-related.

The CFS is controlled by signals from the Feedwater Control System.

The CFS is located in the steam tunnel and Turbine Building.

The CFS has parameter displays for the instruments shown on Figure 2.10.2a in the main control room.

Main Condenser Evacuation System

The MCES removes the hydrogen and oxygen produced by the radiolysis of water in the reactor, and other power cycle noncondensable gases. The system exhausts the gases to the Off-Gas System (OGS) during plant operation, and to the Turbine Building compartment exhaust system at the beginning of each startup. The MCES consists of redundant steam jet air ejector (SJAE) units for power plant operation, and a mechanical vacuum pump for use during startup. Figure 2.10.2b shows the basic system configuration.

The MCES is classified as non-safety-related.

The MCES is located in the Turbine Building.

Steam supply to the SJAE provides dilution of the hydrogen and prevents the offgas from reaching the flammable limit of hydrogen. When the steam flow drops below the setpoint for stream dilution, the Off-Gas System is isolated.

The vacuum pump is tripped and its discharge valve is closed upon receiving a main steamline high radiation signal.

The MCES has the following displays in the main control room:

(1) Parameter displays for the instruments shown on Figure 2.10.2b.

(2) Status indication for the vacuum pump and SJAE discharge valves.

Inspections, Tests, Analyses and Acceptance Criteria

Tables 2.10.2a and 2.10.2b provide a definition of the inspections, tests, and/or analyses, together with associated acceptance criteria, which will be undertaken for the CFCAE System, respectively.

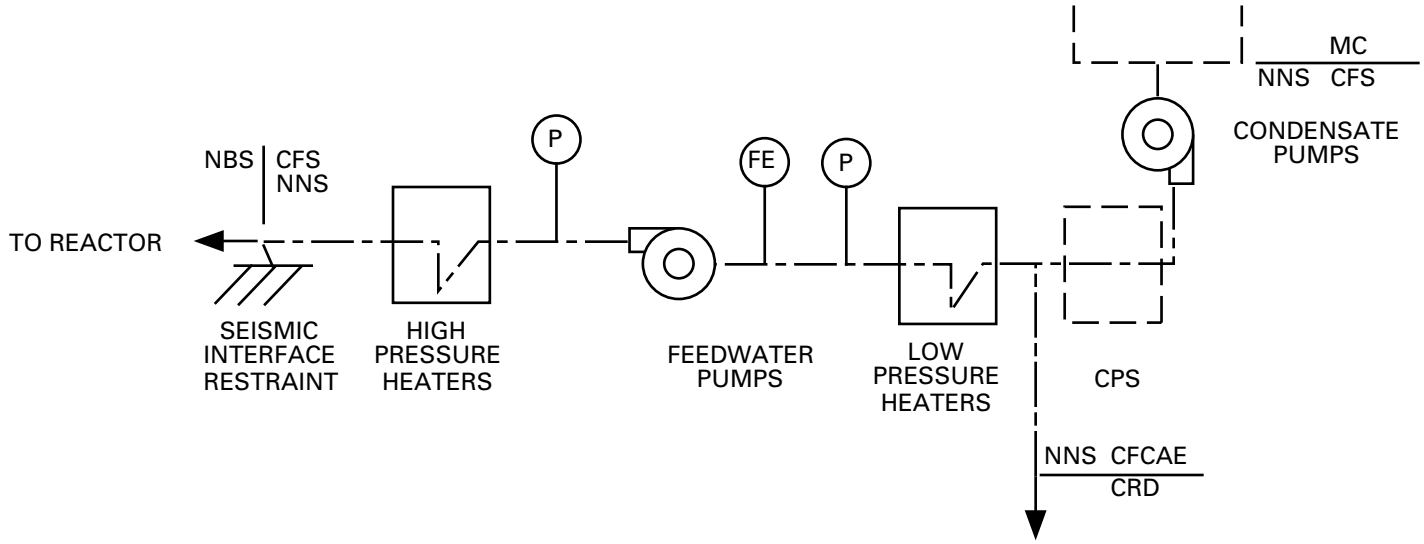

NOTES:
1. RELIEF VALVE DISCHARGE AND VENTS ARE CHANNELED THROUGH CLOSED SYSTEMS.
2. FEEDWATER AND CONDENSATE PUMP REDUNDANCY IS PROVIDED.

Figure 2.10.2a Condensate and Feedwater System

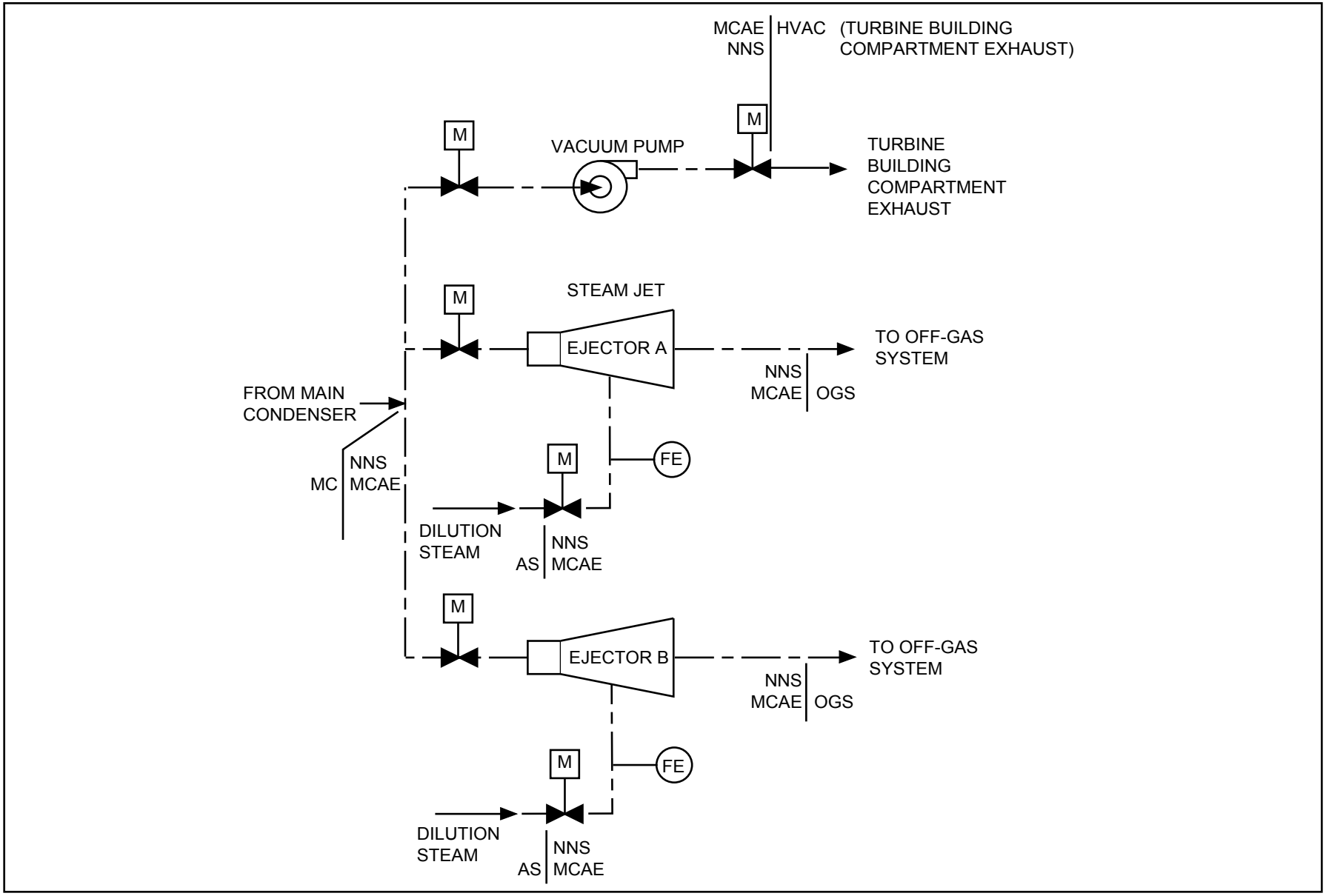

Figure 2.10.2b Main Condenser Evacuation System

Table 2.10.2a Condensate and Feedwater System

Inspections, Tests, Analyses and Acceptance Criteria		
Design Commitment	**Inspections, Tests, Analyses**	**Acceptance Criteria**
1. The basic configuration of the CFS is as shown on Figure 2.10.2a.	1. Inspections of the as-built CFS will be conducted.	1. The as-built CFS conforms with the basic configuration shown in Figure 2.10.2a.
2. The CFS is controlled by signals from the Feedwater Control System.	2. Tests of the as-built CFS will be conducted using simulated input signals.	2. The CFS starts and operates in response to the simulated signals.
3. Main control room displays provided for the CFS are as defined in Section 2.10.2.	3. Inspections will be performed on the main control room displays for the CFS.	3. Displays exist or can be retrieved in the main control room as defined in Section 2.10.2.

Table 2.10.2b Main Condenser Evacuation System

Inspections, Tests, Analyses and Acceptance Criteria		
Design Commitment	**Inspections, Tests, Analyses**	**Acceptance Criteria**
1. The basic configuration of the MCES is as shown on Figure 2.10.2b.	1. Inspections of the as-built MCES will be conducted.	1. The as-built MCES conforms with the basic configuration shown in Figure 2.10.2b.
2. When the steam flow drops below the setpoint for steam dilution, the Off-Gas System is isolated.	2. Tests will be conducted on the as-built MCES using simulated signals for steam flow.	2. The SJAE suction valves close on receipt of a simulated low flow signal.
3. The vacuum pump is tripped and its discharge valve is closed upon receiving a main steamline high radiation signal.	3. Tests will be conducted on the as-built MCES using simulated signals for radiation in the main steamlines.	3. The vacuum pump trips and the discharge valve closes upon receipt of a simulated high radiation signal.
4. Main control room displays provided for the MCES are as defined in Section 2.10.2.	4. Inspections will be performed on the main control room displays for the MCES.	4. Displays exist or can be retrieved in the main control room as defined in Section 2.10.2.

2.10.3 Heater Drain and Vent System

No entry for this system.

2.10.4 Condensate Purification System

Design Description

The Condensate Purification System (CPS) purifies and treats the condensate, using filtration to remove insoluble solids, and ion exchange demineralizer to remove soluble solids. The CPS consists of full flow high efficiency particulate filters followed by full flow deep bed demineralizers. Figure 2.10.4 shows the basic system configuration.

The CPS is classified as non-safety-related.

The CPS is located in the Turbine Building.

The CPS has alarms and display for effluent conductivity in the main control room.

Inspections, Tests, Analyses and Acceptance Criteria

Table 2.10.4 provides a definition of the inspections, tests, and/or analyses, together with associated acceptance criteria, which will be undertaken for the CPS.

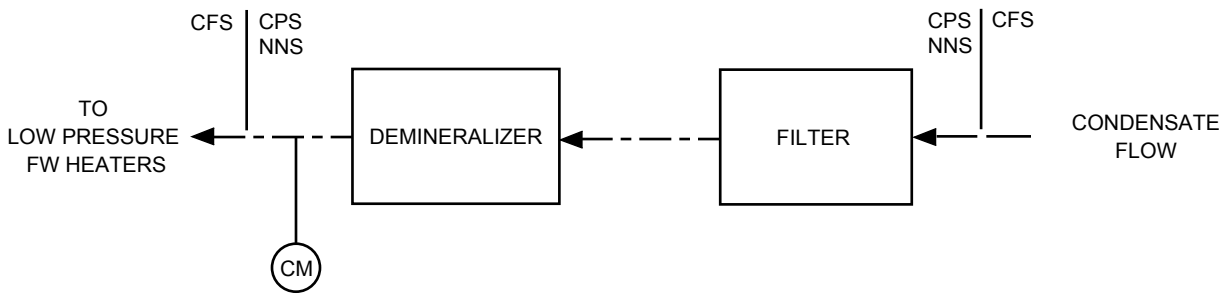

Figure 2.10.4 Condensate Purification System

Table 2.10.4 Condensate Purification System

Inspections, Tests, Analyses and Acceptance Criteria		
Design Commitment	**Inspections, Tests, Analyses**	**Acceptance Criteria**
1. The basic configuration of the CPS is as shown on Figure 2.10.4.	1. Inspections of the as-built System will be conducted.	1. The as-built CPS conforms with the basic configuration shown in Figure 2.10.4.
2. Main control room alarm and display provided for the CPS are as defined in Section 2.10.4.	2. Inspections will be performed on the main control room alarm and display for the CPS.	2. Alarm and display exist or can be retrieved in the main control room as defined in Section 2.10.4.

2.10.5 Condensate Filter Facility

No entry. Covered in Section 2.10.4.

2.10.6 Condensate Demineralizer

No entry. Covered in Section 2.10.4.

2.10.7 Main Turbine

Design Description

The Main Turbine (MT) uses the energy in steam from the reactor to drive the plant generator.

The major turbine components are:

(1) A high pressure section.

(2) An intermediate section (between high pressure and low pressure sections).

(3) Low pressure sections.

The major fluid system boundaries are:

(1) Turbine Main Steam 2.10.1.

(2) Main Condenser 2.10.21.

(3) Turbine Gland Seal 2.10.9.

(4) Extraction System 2.10.12.

The MT is classified as non-safety-related.

The MT has the following features that prevent overspeed:

(1) Main turbine stop valves (MTSV)/Control valves (CV) [MTSVs trip/CVs trip and modulate].

(2) Combined intermediate valves (CIVs) consist of intercept valves (IVs) and intercept stop valves (ISVs) [IVs trip and modulate/ISVs trip].

(3) Extraction line non-return valves (trip).

(4) Redundant valve closure mechanisms (i.e., fast acting solenoid valves and emergency trip fluid system).

(5) Redundant normal speed control.

Three levels of signals to MT valves (i.e., normal speed control/overspeed trip/backup overspeed trip).

Overspeed trip occurs as follows:

	Overspeed Condition	Protective Action
(1)	Exceeds normal speed control setpoint.	Normal speed control signals the CVs and IVs to close.
(2)	Exceeds overspeed trip setpoint.	Overspeed trip signals MTSVs, CVs, IVs, ISVs, and extraction line non-return valves to close.
(3)	Exceeds backup overspeed trip setpoint.	Backup overspeed trip signals MTSVs, CVs, IVs, ISVs, and extraction line non-return valves to close.

The turbine MTSV closes in 0.1 seconds or greater. The turbine CV trip closure is 0.08 seconds or greater. In the modulating mode, the full stroke servo-closure of the turbine CV is 2.5 seconds or greater.

The MT System has the following alarms and displays in the main control room:

(1) Overspeed alarm.

(2) Parameter displays for turbine speed and inlet steam pressure.

The main turbine stop valves are analysed to demonstrate structural integrity under safe shutdown earthquake (SSE) loading conditions.

The MT is located within the Turbine Building. The axis of the turbine and generator is orientated within the Turbine Building to be inline with the Reactor and Control Buildings.

Inspections, Tests, Analyses and Acceptance Criteria

Table 2.10.7 provides a definition of the inspections, tests, and/or analyses, together with associated acceptance criteria, which will be undertaken for the MT System.

Table 2.10.7 Main Turbine System

Inspections, Tests, Analyses and Acceptance Criteria		
Design Commitment	**Inspections, Tests, Analyses**	**Acceptance Criteria**
1. The basic configuration of the MT System is as described in Section 2.10.7.	1. Inspection of the as-built MT will be conducted.	1. The as-built MT conforms with the basic configuration described in Section 2.10.7.
2. MT System overspeed protective actions are as defined in Section 2.10.7.	2. Tests will be conducted on the as-built MT System using simulated overspeed signals.	2. The following protective actions occur: **Overspeed Condition** / **Protective Action** a. Exceeds normal speed control setpoint. / Normal speed control signals the CVs and IVs to close. b. Exceeds overspeed trip setpoint. / Overspeed trip signals MTSVs, CVs, ISVs, IVs, and extraction line non-return valves to close. c. Exceeds backup overspeed trip setpoint. / Backup overspeed trip signals MTSVs, CVs, ISVs, IVs, and extraction line non-return valves to close.
3. The turbine MTSV closes in 0.10 seconds or greater.	3. Tests will be conducted on the as-built turbine MTSV.	3. The turbine MTSV closes in 0.10 seconds or greater
4. The turbine CV trip closure is 0.08 seconds or greater.	4. Tests will be conducted on the as-built turbine CV.	4. The turbine CV trip closure is 0.08 seconds or greater.

Table 2.10.7 Main Turbine System (Continued)

Inspections, Tests, Analyses and Acceptance Criteria		
Design Commitment	**Inspections, Tests, Analyses**	**Acceptance Criteria**
5. In the modulating mode, the full stroke servo closure of the turbine CV is 2.5 seconds or greater.	5. Tests will be conduced on the as-built turbine CV.	5. In the modulating mode, the full stroke servo closure of the turbine CV is 2.5 seconds or greater.
6. Main control room alarms and displays provided for the MT are as defined in Section 2.10.7.	6. Inspections will be performed on the main control room alarms and displays for the MT.	6. Alarms and displays exist or can be retrieved in the main control room as defined in Section 2.10.7.
7. The axis of the turbine and generator is oriented within the Turbine Building to be inline with the Reactor and Control Buildings.	7. Inspections will be conducted of the as-built turbine and generator.	7. The axis of the turbine and generator is oriented within the Turbine Building to be in line with the Reactor and Control Buildings.
8. The MTSVs are analysed to demonstrate structural integrity under SSE loading conditions.	8. A seismic analysis of the as-built MTSVs will be performed.	8. An analysis report exists which concludes that the as-built MTSVs can withstand an SSE without the loss of structural integrity.

2.10.8 Turbine Control System

No entry. Covered in Section 2.10.7.

2.10.9 Turbine Gland Seal System

Design Description

The Turbine Gland Seal (TGS) System prevents the escape of radioactive steam from the turbine shaft casing penetrations and valve stems and prevents air inleakage through subatmospheric turbine glands. Figure 2.10.9 shows the basic system configuration.

The TGS System consists of a sealing steam pressure regulator, steam seal header and a gland seal condenser (GSC) with two full capacity exhaust blowers and associated piping, valves and instrumentation.

The TGS System is bounded by the Main Turbine and the Turbine Bypass System. The TGS System receives steam from either the Turbine Main Steam System, the feedwater heater drain tank vent header or auxiliary steam sources. The exhaust blowers discharge to the Turbine Building compartment exhaust system.

The TGS System is classified as non-safety-related.

The TGS System is located in the Turbine Building.

The TGS System has displays for gland seal condenser and steam seal header pressure in the main control room.

Inspections, Tests, Analyses and Acceptance Criteria

Table 2.10.9 provides a definition of the inspections, tests, and/or analyses, together with associated acceptance criteria, which will be undertaken for the TGS System.

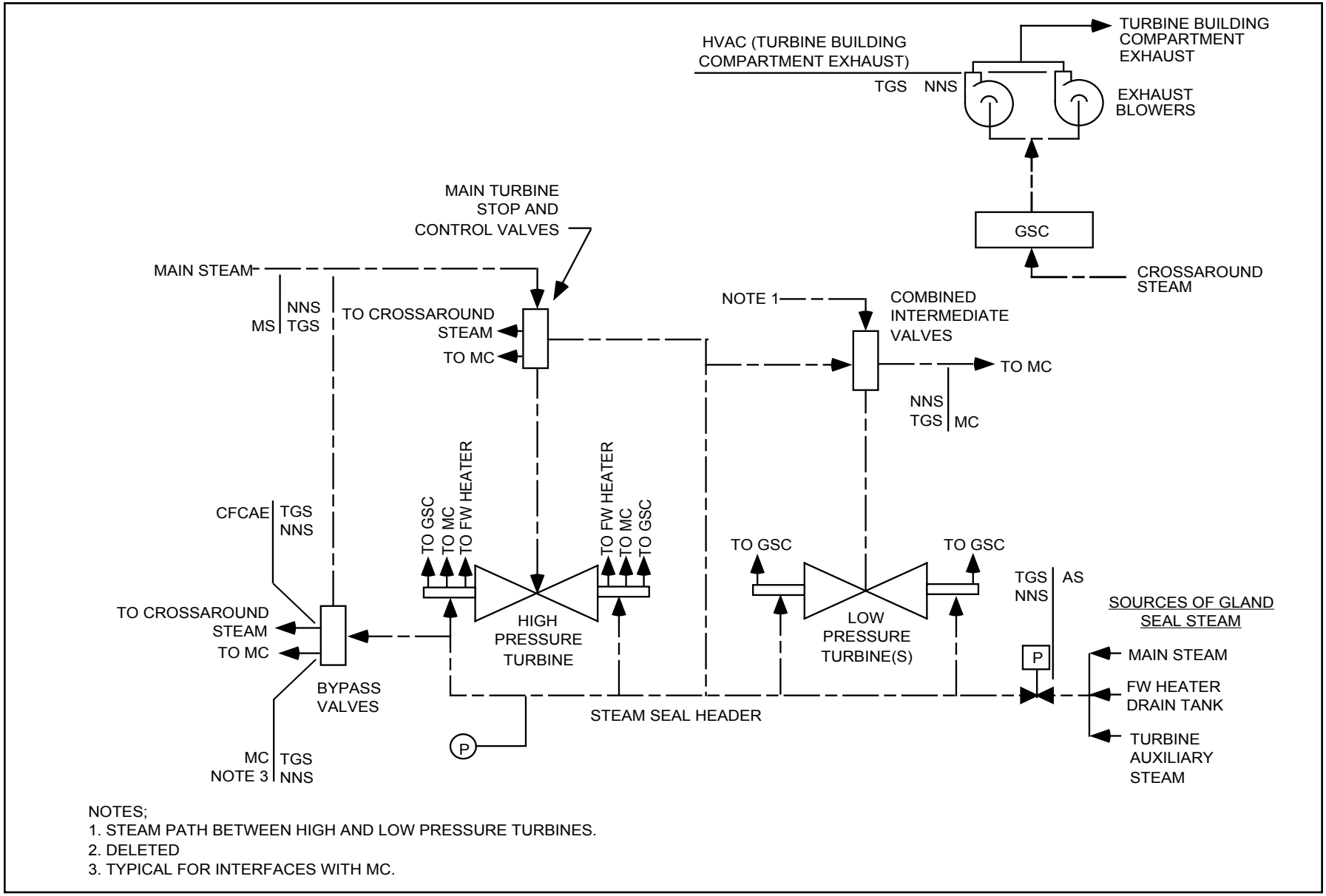

NOTES;
1. STEAM PATH BETWEEN HIGH AND LOW PRESSURE TURBINES.
2. DELETED
3. TYPICAL FOR INTERFACES WITH MC.

Figure 2.10.9 Turbine Gland Seal System

Table 2.10.9 Turbine Gland Seal System

Inspections, Tests, Analyses and Acceptance Criteria		
Design Commitment	**Inspections, Tests, Analyses**	**Acceptance Criteria**
1. The basic configuration of the TGS System is as shown on Figure 2.10.9.	1. Inspections of the as-built system will be conducted.	1. The as-built TGS System conforms with the basic configuration shown on Figure 2.10.9.
2. Main control room displays provided for the TGS System are as defined in Section 2.10.9.	2. Inspections will be performed on the main control room displays for the TGS System.	2. Displays exist or can be retrieved in the main control room as defined in Section 2.10.9.

2.10.10 Turbine Lubricating Oil System

No entry for this system.

2.10.11 Moisture Separator Heater

No entry for this system.

2.10.12 Extraction System

No entry for this system.

2.10.13 Turbine Bypass System

Design Description

The Turbine Bypass System (TBS) discharges main steam directly to the condenser. The TBS is bounded by the Turbine Main Steam System and the Main Condenser.

The TBS is classified as non-safety-related.

The TBS consists of a valve chest that is connected to the main steamlines upstream of the main turbine stop valves, and dump lines that connect each regulating valve outlet to the condenser shell.

The turbine bypass valves are opened by a signal from the Steam Bypass and Pressure Control System.

The turbine bypass valves open upon turbine trip or generator load rejection, automatically trip closed whenever the vacuum in the condenser falls below a preset value, and fail closed on loss of electrical power or hydraulic system pressure.

The TBS is analyzed to demonstrate structural integrity under the safe shutdown earthquake (SSE) loading conditions.

The TBS is located in the Turbine Building.

Inspections, Tests, Analyses and Acceptance Criteria

Table 2.10.13 provides a definition of the inspections, tests, and/or analyses, together with associated acceptance criteria, which will be undertaken for the TBS.

Table 2.10.13 Turbine Bypass System

Inspections, Tests, Analyses and Acceptance Criteria		
Design Commitment	**Inspections, Tests, Analyses**	**Acceptance Criteria**
1. The basic configuration for the TBS is described in Section 2.10.13 and Turbine Main Steam System, Figure 2.10.1.	1. Inspections of the as-built TBS will be conducted.	1. The as-built TBS conforms with the basic configuration of Section 2.10.13 and Turbine Main Steam System, Figure 2.10.1.
2. The turbine bypass valves are opened by a signal from the Steam Bypass and Pressure Control System.	2. Tests will be conducted using a simulated signal.	2. Turbine bypass valves open upon receipt of simulated signal from the Steam Bypass and Pressure Control System.
3. The TBS is analysed to demonstrate structural integrity under SSE loading conditions.	3. A seismic analysis of the as-built TBS will be performed.	3. An analysis report exists which concludes that the as-built TBS can withstand a SSE without loss of structural integrity.

2.10.14 Reactor Feedwater Pump Driver

No entry. Covered in Section 2.10.2.

2.10.15 Turbine Auxiliary Steam System

No entry for this system.

2.10.16 Generator

No entry for this system.

2.10.17 Hydrogen Gas Cooling System

No entry for this system.

2.10.18 Generator Cooling System

No entry for this system.

2.10.19 Generator Sealing Oil System

No entry for this system.

2.10.20 Exciter

No entry for this system.

2.10.21 Main Condenser

Design Description

The Main Condenser (MC) condenses and deaerates the exhaust steam from the main turbine (MT) and provides a heat sink for the Turbine Bypass (TB) System. The MC is also a collection point for other steam cycle drains and vents.

The MC hotwell provides a holdup volume for main steam isolation valve (MSIV) fission product leakage.

The MC is classified as non-safety-related and non-seismic Category I. The supports and anchors for the MC are designed to withstand a safe shutdown earthquake (SSE).

The MC is located in the Turbine Building (T/B).

The MC tubes are made from corrosion-resistant material. The MC operates at a vacuum; consequently, leakage is into the shell side of the MC. Circulating water leakage from the tubes to the condenser is detected by measuring the conductivity of sample water extracted beneath the tube bundles. In addition, a conductivity monitor is located at the discharge of the condensate pumps, and alarms are provided in the main control room.

Inspections, Tests, Analyses and Acceptance Criteria

Table 2.10.21 provides a definition of the inspections, tests, and/or analyses, together with associated acceptance criteria, which will be undertaken for the MC.

Table 2.10.21 Main Condenser

Inspections, Tests, Analyses and Acceptance Criteria		
Design Commitment	**Inspections, Tests, Analyses**	**Acceptance Criteria**
1. The supports and anchors for the MC are designed to withstand a safe shutdown earthquake.	1. An analysis of the ability of the as-built condenser supports and anchors to withstand a safe shutdown earthquake will be performed.	1. An analysis report exists which concludes that the as-built main condenser supports and anchors are able to withstand a safe shutdown earthquake.
2. A conductivity monitor is located at the discharge of the condensate pumps.	2. The as-built system will be inspected.	2. A conductivity monitor exists at the discharge of the condensate pumps.
3. Main control room alarms provided for the main condenser are as defined in Section 2.10.21.	3. Inspections will be performed on the main control room alarms for the main condenser.	3. Alarms exist in the main control room as defined in Section 2.10.21.

2.10.22 Off-Gas System

Design Description

The Off-Gas System (OGS) treats the gas exhausted from the main turbine condensers to control the release of gaseous radioactivity discharged to the plant environment.

The OGS has redundant hydrogen/oxygen recombiners to reduce process gas volume and noble gas adsorption beds to provide radionuclide retention/decay. A high efficiency particulate air (HEPA) filter is also provided. Figure 2.10.22 shows the basic system configuration.

Radiation levels in the OGS discharge stream are monitored (two channels). A main control room alarm and automatic OGS isolation are initiated when the radiation level exceeds setpoints.

The system pressure boundary of the OGS (including the hydrogen analyzers) is capable of withstanding an internal hydrogen explosion.

The adsorption beds and their support structure do not collapse under seismic loads corresponding to the safe shutdown earthquake (SSE) ground accelerations.

The OGS is classified as non-safety-related.

The OGS is located in the Turbine Building.

Inspections, Tests, Analyses and Acceptance Criteria

Table 2.10.22 provides a definition of the inspection, tests and/or analyses, together with associated criteria, which will be undertaken for the OGS.

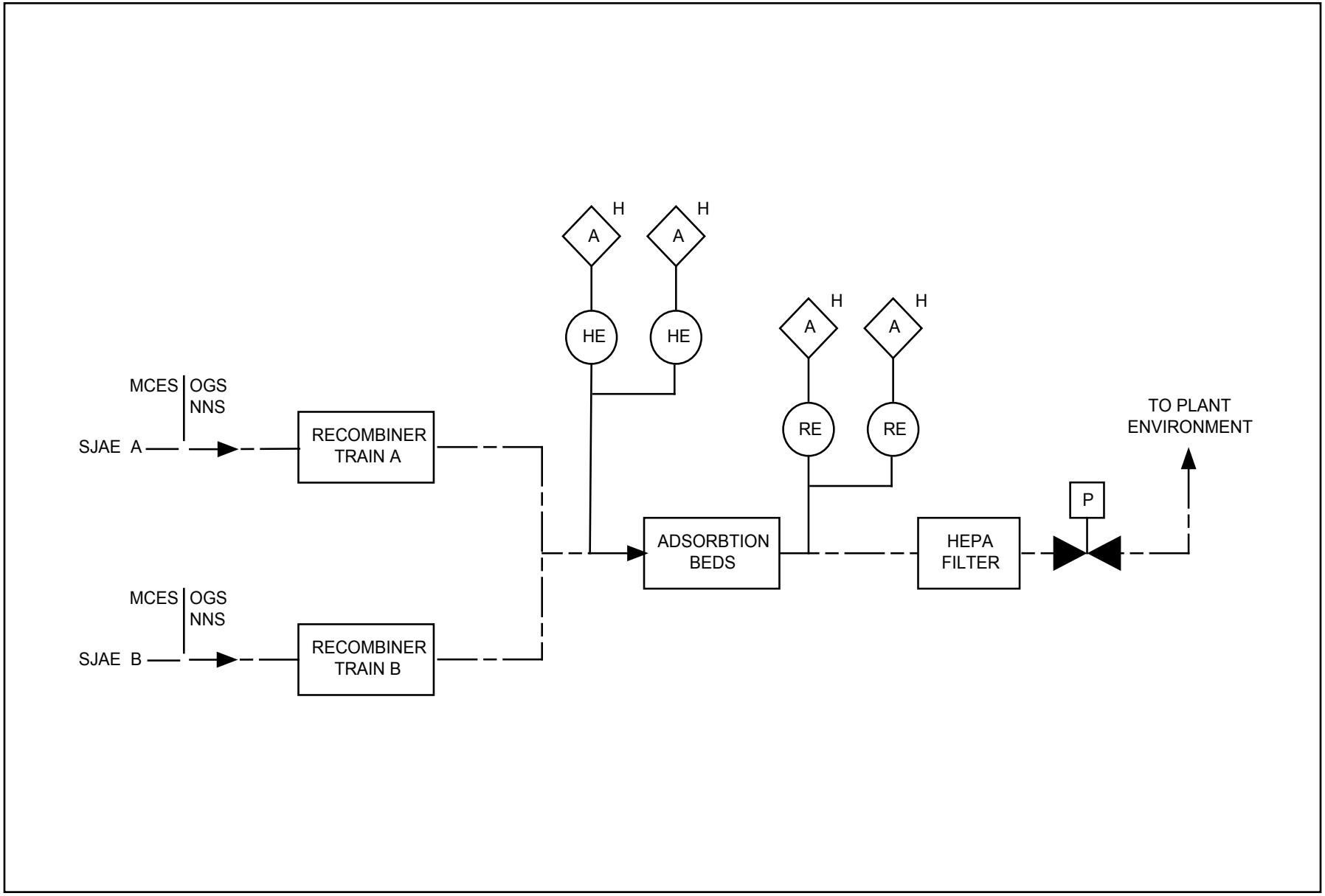

Figure 2.10.22 Off-Gas System

Table 2.10.22 Off-Gas System

Inspections, Tests, Analyses and Acceptance Criteria		
Design Commitment	**Inspections, Tests, Analyses**	**Acceptance Criteria**
1. The basic configuration of the OGS is as shown on Figure 2.10.22.	1. Inspections of the as-built system will be conducted.	1. The as-built OGS conforms with the basic configuration shown in Figure 2.10.22.
2. The OGS pressure-retaining components retain their integrity under internal pressure that will be experienced during service.	2. A hydrostatic test will be conducted on those pressure-retaining components of the OGS.	2. The results of the hydrostatic tests demonstrate that the pressure-retaining components of the OGS can retain their integrity under internal pressure that will be experienced during service.
3. Automatic OGS isolation is initiated when radiation levels in the discharge stream exceed the setpoint.	3. Tests will be conducted on the as-built OGS using a simulated radiation signal.	3. OGS automatically isolates when the simulated signal exceeds the setpoint.
4. Main control room alarm provided for the OGS is as defined in Subsection 2.10.22.	4. Inspections will be conducted on the main control room alarm for the OGS.	4. Alarm exists in the main control room as defined in Section 2.10.22.
5. The adsorption beds and their support structures do not collapse under seismic loads corresponding to the SSE ground accelerations.	5. A seismic analysis of the adsorption beds and their support structures will be performed.	5. A structure analysis report exists which concludes that collapse of the adsorption beds and their support structures do not occur.
6. The system pressure boundary of the OGS is capable of withstanding an internal hydrogen explosion.	6. A hydrostatic test of the OGS pressure boundary will be conducted in the plant with test pressures equal to or greater than 1.5 times design pressure.	6. The OGS pressure boundary retains its integrity under the test conditions.

2.10.23 Circulating Water System

Design Description

The Circulating Water (CW) System provides a supply of cooling water to the Main Condenser to remove the heat rejected by the turbine cycle and auxiliary systems and transport it to the power cycle heat sink. The parts of the CW System that are in the Turbine Building are within the Certified Design. Those parts of the system that are outside the Turbine Building are not in the Certified Design. Figure 2.10.23 shows the system basic configuration and scope of the CW System within the Certified Design.

The CW System is classified as non-safety-related.

For the CW System, condenser area water level sensors are provided. A high water level signal causes an alarm in the main control room (MCR). A high-high water level signal closes the condenser valves in the CW System.

The CW System motor operated valve position indications are provided in the main control room (MCR).

Interface Requirements

The parts of the CW System (including the power cycle heat sink) which are not within the Certified Design shall meet the following requirements:

(1) Design features shall be provided to limit flooding in the Turbine Building.

Inspections, Tests, Analyses and Acceptance Criteria

Table 2.10.23 provides a definition of the inspections, tests, and/or analyses, together with associated acceptance criteria, which will be undertaken for the parts of the CW Systems within the Certified Design.

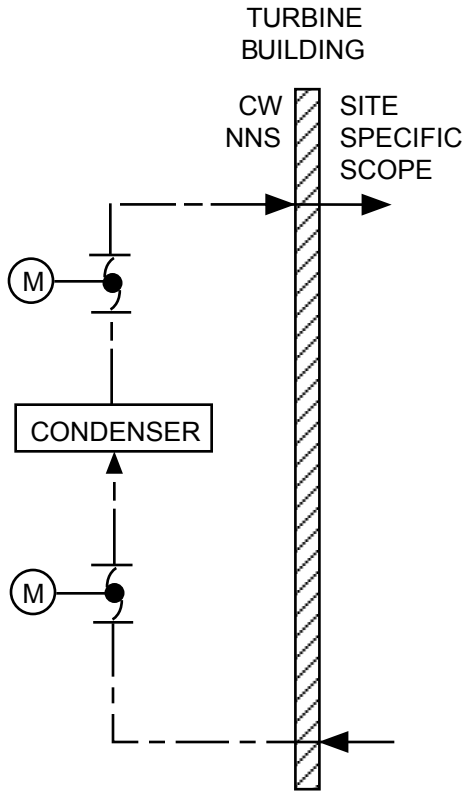

NOTES:
1. MULTIPLE LINES MAY BE USED.
2. CONDENSER ISOLATION PROVISIONS ARE REQUIRED FOR EACH LINE.

Figure 2.10.23 Circulating Water System

Table 2.10.23 Circulating Water System

Inspections, Tests, Analyses and Acceptance Criteria		
Design Commitment	**Inspections, Tests, Analyses**	**Acceptance Criteria**
1. A basic configuration for the CW System is as shown on Figure 2.10.23.	1. Inspections of the as-built system will be conducted.	1. The as-built CW System conforms with the basic configuration shown on Figure 2.10.23.
2. The circulating water condenser valves are closed in the event of a system isolation signal from the condenser area level switches.	2. Testing of the as-built CW System will be performed using simulated signals.	2. The circulating water condenser valves are closed in the event of a system isolation signal from the condenser area level switches.
3. MCR alarms and displays provided for the CW System are as defined in Section 2.10.23.	3. Inspections will be performed on the MCR alarms for the CW System.	3. Alarms and displays exist or can be retrieved in the MCR as defined in Section 2.10.23.

2.10.24 Condenser Cleanup Facility

No entry for this system.

2.11.1 Makeup Water (Purified) System

Design Description

The Makeup Water (Purified) (MUWP) System is a distribution system with components located throughout the plant. The MUWP provides demineralized makeup water to the condensate storage tank, the surge tanks which are shared by the Reactor Building Cooling Water System and Heating, Ventilation, and Air Conditioning Emergency Cooling Water System and other plant systems.

The MUWP System consists of distribution piping and valves. Makeup water is supplied to the system by the Makeup Water Preparation System.

The MUWP System is classified as non-safety-related with the exception of the primary containment isolation function which is safety-related. The primary containment pipe penetration and isolation valves are classified as Seismic Category I and ASME Code Class 2.

The outboard containment isolation valve is a manual valve locked closed during standby, hot standby and power operation. The inboard containment isolation valve is a check valve (CV) that has an active safety-related function to close under system pressure, fluid flow, and temperature conditions.

Inspections, Tests, Analyses and Acceptance Criteria

Table 2.11.1 provides a definition of the inspections, tests, and/or analyses, together with associated acceptance criteria, which will be undertaken for the MUWP System.

Table 2.11.1 Makeup Water (Purified) System

Inspections, Tests, Analyses and Acceptance Criteria		
Design Commitment	**Inspections, Tests, Analyses**	**Acceptance Criteria**
1. The basic configuration of the safety-related portion of the MUWP System is as described in Section 2.11.1.	1. Inspections of the as-built safety-related portions of the MUWP System will be conducted.	1. The as-built safety-related portion of the MUWP System conforms with the basic configuration described in Section 2.11.1.
2. The CV designated in Section 2.11.1 as having an active safety-related function closes under system pressure, fluid flow, and temperature conditions.	2. Tests of the installed valve for closing will be conducted under system preoperational pressure, fluid flow, and temperature conditions.	2. The CV closes.

2.11.2 Makeup Water (Condensate) System

Design Description

The Makeup Water (Condensate) (MUWC) System is a distribution system with components located throughout the plant. Figure 2.11.2 shows the basic system configuration and scope.

Except for the level sensors and associated piping, the MUWC System is classified as non-safety-related.

The level sensors and associated piping are classified as Seismic Category I. Figure 2.11.2 shows the ASME Code class for the MUWC System piping and components.

The level instruments are located in the Reactor Building; the condensate storage tank (CST) and pump(s) are located outside the Reactor Building.

Each of the four MUWC System water level sensors is powered from the respective divisional Class 1E power supply. In the MUWC System, independence is provided between the Class 1E divisions, and also between the Class 1E divisions and non-Class 1E equipment.

The MUWC System has displays for CST water level in the main control room.

MUWC System components with display interfaces with the Remote Shutdown System (RSS) are shown on Figure 2.11.2.

Inspections, Tests, Analyses and Acceptance Criteria

Table 2.11.2 provides a definition of the inspections, tests, and/or analyses, together with associated acceptance criteria, which will be undertaken for the MUWC System.

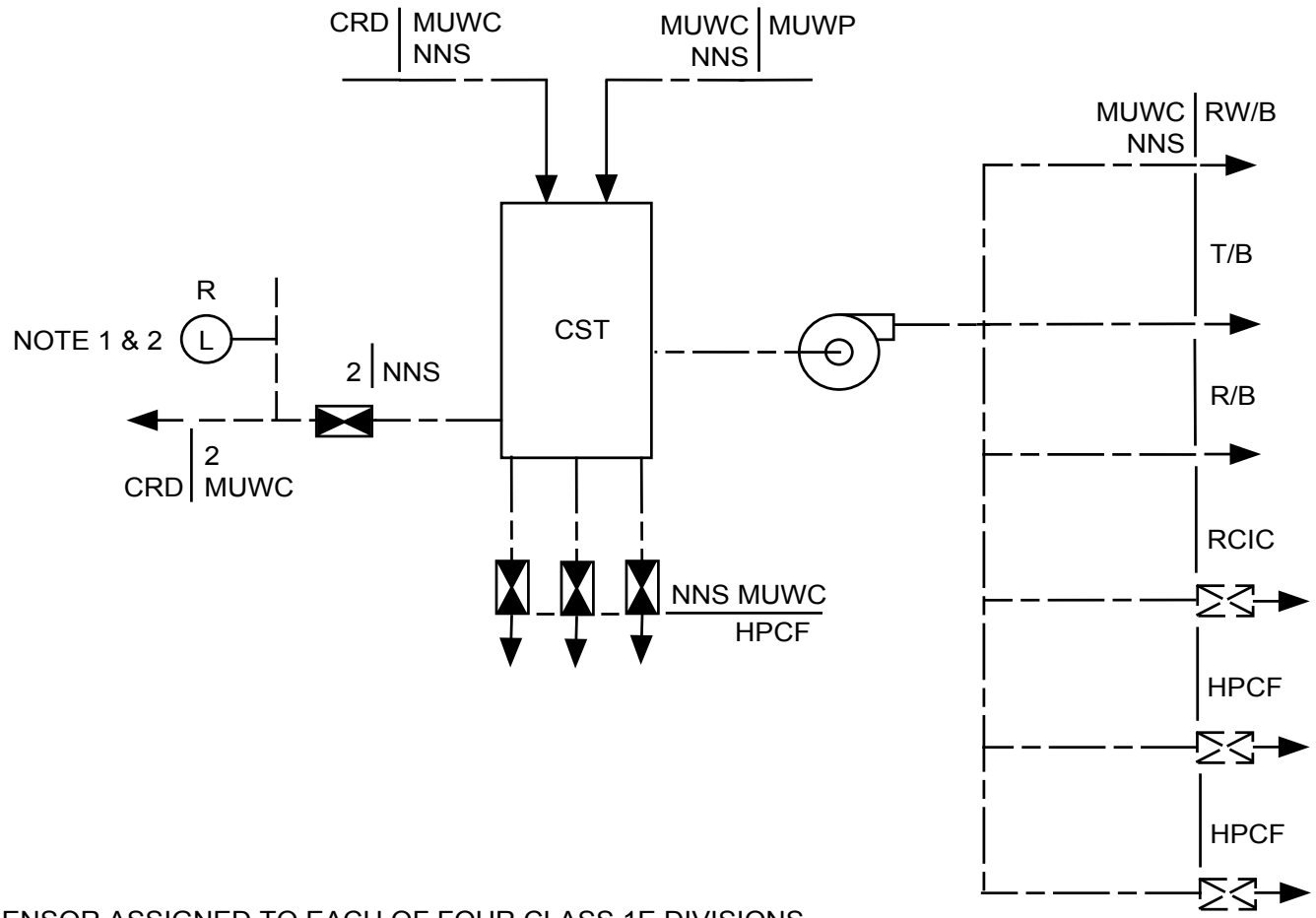

NOTES:
1. ONE SENSOR ASSIGNED TO EACH OF FOUR CLASS 1E DIVISIONS.
2. RSS INTERFACE IS WITH DIVISION II LEVEL SENSOR ONLY.

Figure 2.11.2 Makeup Water (Condensate) System

Table 2.11.2 Makeup Water (Condensate) (MUWC) System

Inspections, Tests, Analyses and Acceptance Criteria		
Design Commitment	**Inspections, Tests, Analyses**	**Acceptance Criteria**
1. The basic configuration of the MUWC System is as shown on Figure 2.11.2.	1. Inspections of the as-built system will be conducted.	1. The as-built MUWC System conforms with the basic configuration on Figure 2.11.2.
2. The ASME Code components of the MUWC System retain their pressure boundary integrity under internal pressures that will be experienced during service.	2. A hydrostatic test will be conducted on those Code components of the MUWC System required to be hydrostatically tested by the ASME Code.	2. The results of the hydrostatic test of the ASME Code components of the MUWC System conform with the requirements in the ASME Code, Section III.
3. Each of the four MUWC System water level sensors is powered from the respective divisional Class 1E power supply. In the MUWC System, independence is provided between Class 1E divisions, and between Class 1E divisions and non-Class 1E equipment.	3. a. Tests will be performed on the MUWC System by providing a test signal in only one Class 1E division at a time. b. Inspections of the as-built Class 1E divisions in the MUWC System will be performed.	3. a. The test signal exists only in the Class 1E division under test in the MUWC System. b. In the MUWC System, physical separation or electrical isolation exists between Class 1E divisions. Physical separation or electrical isolation exists between these Class 1E divisions and non-Class 1E equipment.
4. Main control room displays provided for the MUWC System are as defined in Section 2.11.2	4. Inspections will be performed on the main control room displays for the MUWC System.	4. Displays exist or can be retrieved in the main control room as defined in Section 2.11.2.
5. RSS displays provided for the MUWC System are as defined in Section 2.11.2.	5. Inspections will be performed on the RSS displays for the MUWC System.	5. Displays exist on the RSS as defined in Section 2.11.2.

2.11.3 Reactor Building Cooling Water System

Design Description

The Reactor Building Cooling Water (RCW) System distributes cooling water through three physically separated and electrically independent divisions. The system removes heat from plant auxiliaries and transfers it to the Ultimate Heat Sink (UHS) via the Reactor Service Water (RSW) System. The RCW System removes heat from emergency core cooling equipment, including the emergency diesel generators (DGs) during a safe reactor shutdown cooling function. RCW System configurations are shown in Figures 2.11.3a, 2.11.3b, and 2.11.3c. Figure 2.11.3d shows the RCW System control interfaces. All components cooled by the RCW System are parts of other systems and are not part of the RCW System. Each RCW division includes two pumps which circulate cooling water through the equipment cooled by the RCW System and through three heat exchangers which transfer the RCW heat to the UHS via the RSW System.

The RCW System performs a safe reactor shutdown cooling function following either a loss-of-coolant accident (LOCA) or a loss-of-preferred-power (LOPP) or both. Assuming a single active failure in any mechanical or electrical division or RCW support system, which disables any one of the three RCW divisions, the other two divisions perform safe reactor shutdown cooling.

Tables 2.11.3a, 2.11.3b, and 2.11.3c show which equipment receives RCW flow during various plant operating and emergency conditions. The tables also indicate how many heat exchangers are in service under each condition.

The RCW System is classified as safety-related except for those portions as shown on Figures 2.11.3a, 2.11.3b, and 2.11.3c as non-nuclear safety.

The RCW System responses to a LOCA signal are the following:

(1) Starts any standby RCW pumps.

(2) Opens any closed standby RCW heat exchanger outlet valves.

(3) Opens all Residual Heat Removal (RHR) System heat exchanger cooling water outlet valves.

(4) Closes all RCW containment isolation valves.

(5) Closes valves to the following non-safety-related components (to Reactor Water Cleanup System (CUW) and reactor internal pump (RIP) MG sets).

(6) Opens the RCW water temperature pneumatic control valves (located downstream of RCW heat exchangers) and closes the RCW heat exchanger bypass valves.

(7) Overrides the RCW pump trip signal from low surge tank and low stand pipe level.

Safety-related valves separate the safety-related portions of the RCW System from the non-safety-related portions of the system. The separation valves to the non-safety-related RCW System are automatically or remote-manually operated, and their positions are indicated in the main control room.

Component design parameters are:

	Division A/B	**Division C**
Discharge flow rate (per pump)	≥1420 m^3/h	≥ 1237 m^3/h
Heat exchanger design basis heat removal capacities: (per heat exchanger)	≥ 47.73 GJ/h	≥ 44.38 GJ/h

These heat removal capabilities include a 20% margin above the minimum required for design basis accident conditions. Consequently, plant operation is acceptable with heat exchanger capacities greater than or equal to 80% of these values.

Figures 2.11.3a, 2.11.3b, and 2.11.3c show the ASME Code Class for the RCW System piping and components. The safety-related portions of the RCW divisions are classified as Seismic Category I. The piping to the fuel pool cooling (FPC) system heat exchangers and room coolers are classified as Seismic Category I.

The RCW pumps and heat exchangers are located in the lower floors of the Control Building. The equipment cooled by the RCW divisions are located in the Control Building, Reactor Building, Turbine Building, and Radwaste Building, (Figures 2.11.3a, 2.11.3b, and 2.11.3c).

Each of the three RCW divisions is powered from its respective Class 1E division as shown in Figures 2.11.3a, 2.11.3b, and 2.11.3c. In the RCW System, independence is provided between the Class 1E divisions and also between the Class 1E divisions and non-Class 1E equipment. The safety-related portion of each mechanical division of the RCW System (Divisions A, B, C) is physically separated from the safety-related portions of the other divisions.

The RCW System has the following displays and controls in the main control room:

(1) Parameter displays for instruments shown on Figures 2.11.3a, 2.11.3b, and 2.11.3c.

(2) Controls and status displays for the RCW active safety-related components shown on Figures 2.11.3a, 2.11.3b, and 2.11.3c.

The RCW System components with displays and control interfaces with the Remote Shutdown System (RSS) are identified in Figures 2.11.3a and 2.1.3b.

The safety-related electrical equipment shown on Figures 2.11.3a, 2.11.3b, and 2.11.3c, located in the Reactor Building, is qualified for a harsh environment.

The motor-operated valves (MOVs) shown on Figures 2.11.3a, 2.11.3b, and 2.11.3c have active safety-related functions to open, close, or both open and close, and perform these functions under differential pressure, fluid flow, and temperature conditions.

The check valves (CVs) shown on Figures 2.11.3a, 2.11.3b, and 2.11.3c have active safety-related functions to open, close, or both open and close under system pressure, fluid flow, and temperature conditions.

A separate surge tank of at least $16m^3$ is provided for each RCW division. Each surge tank is shared with the corresponding division of the HVAC Emergency Cooling Water (HECW) System. Makeup water is provided for the surge tank by the Makeup Water (Purified) (MUWP) System by an automatic or main control room signal. Low water level signals in the surge tanks do the following (in order of decreasing level):

(1) Low—opens the MUWP makeup water valve.

(2) Low-Low— closes the pneumatic and motor-operated valves which stop flow to the non-safety-related components.

The Suppression Pool Cleanup (SPCU) System provides a backup surge tank water supply.

The pneumatic-operated valves shown in Figures 2.11.3a, 2.11.3b, and 2.11.3c fail as follows in the event that either electric power to the valve-actuating solenoid is lost or pneumatic pressure to the valve is lost: RCW makeup valves from the MUWP fail open, RCW water temperature control valves fail open, RCW heat exchanger bypass valves fail closed, and the safety-related/non-safety-related separation valve fails closed.

Inspections, Tests, Analyses and Acceptance Criteria

Table 2.11.3d provides a definition of the inspections, tests, and/or analyses together with associated acceptance criteria, which will be undertaken for the RCW System.

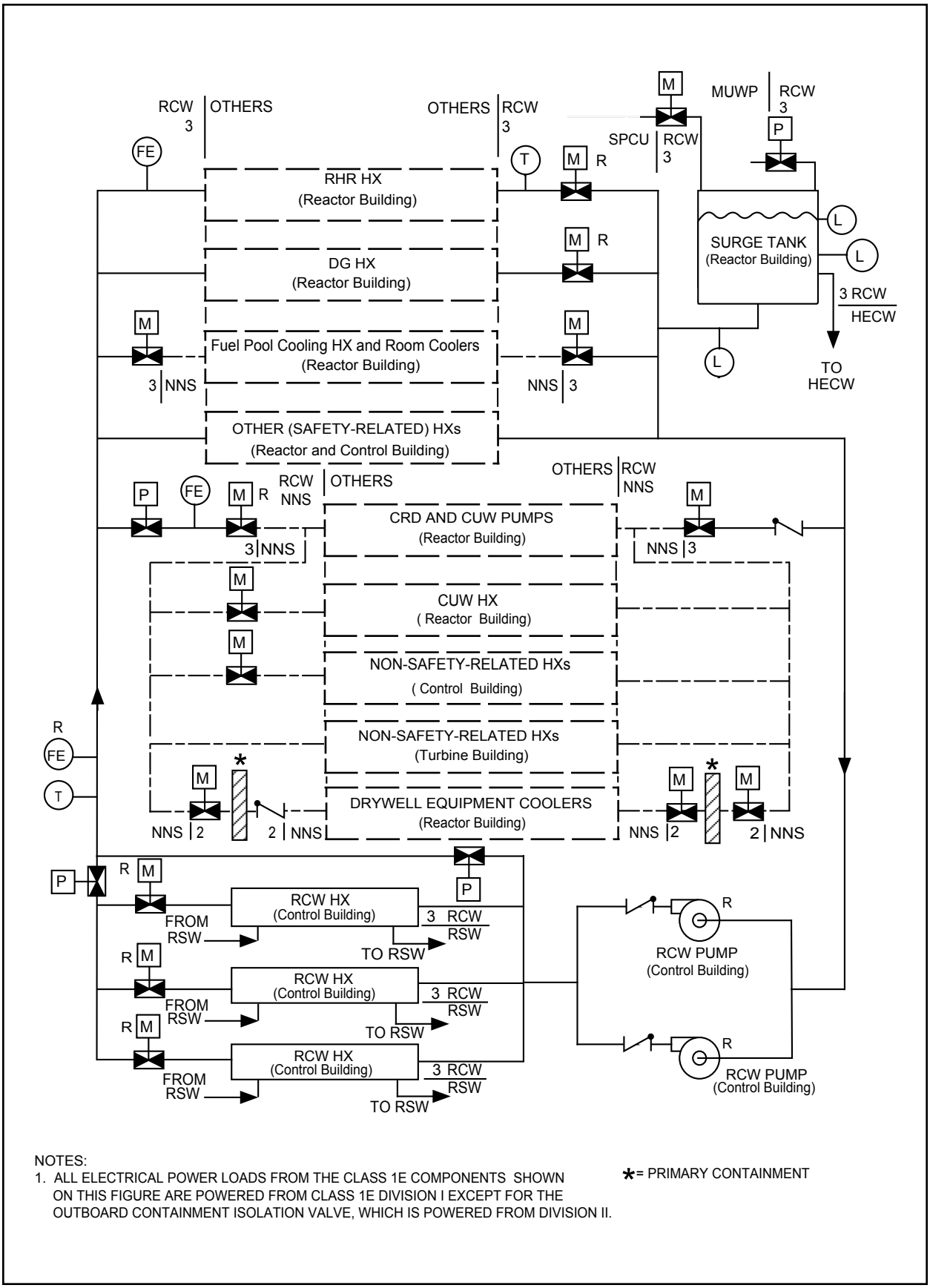

NOTES:
1. ALL ELECTRICAL POWER LOADS FROM THE CLASS 1E COMPONENTS SHOWN ON THIS FIGURE ARE POWERED FROM CLASS 1E DIVISION I EXCEPT FOR THE OUTBOARD CONTAINMENT ISOLATION VALVE, WHICH IS POWERED FROM DIVISION II.

*= PRIMARY CONTAINMENT

Figure 2.11.3a Reactor Building Cooling Water System (RCW-A)

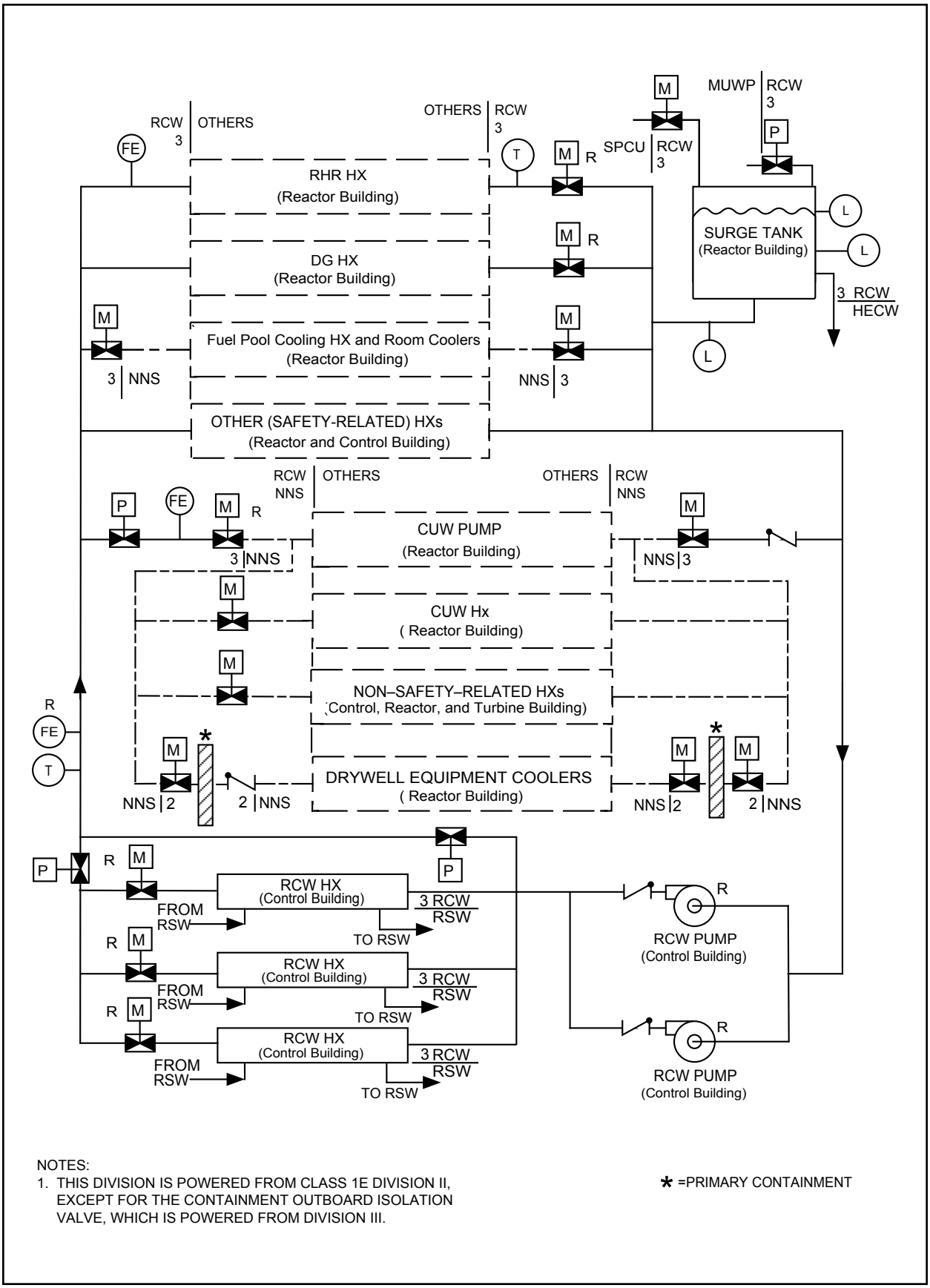

NOTES:
1. THIS DIVISION IS POWERED FROM CLASS 1E DIVISION II, EXCEPT FOR THE CONTAINMENT OUTBOARD ISOLATION VALVE, WHICH IS POWERED FROM DIVISION III.

* =PRIMARY CONTAINMENT

Figure 2.11.3b Reactor Building Cooling Water System (RCW-B)

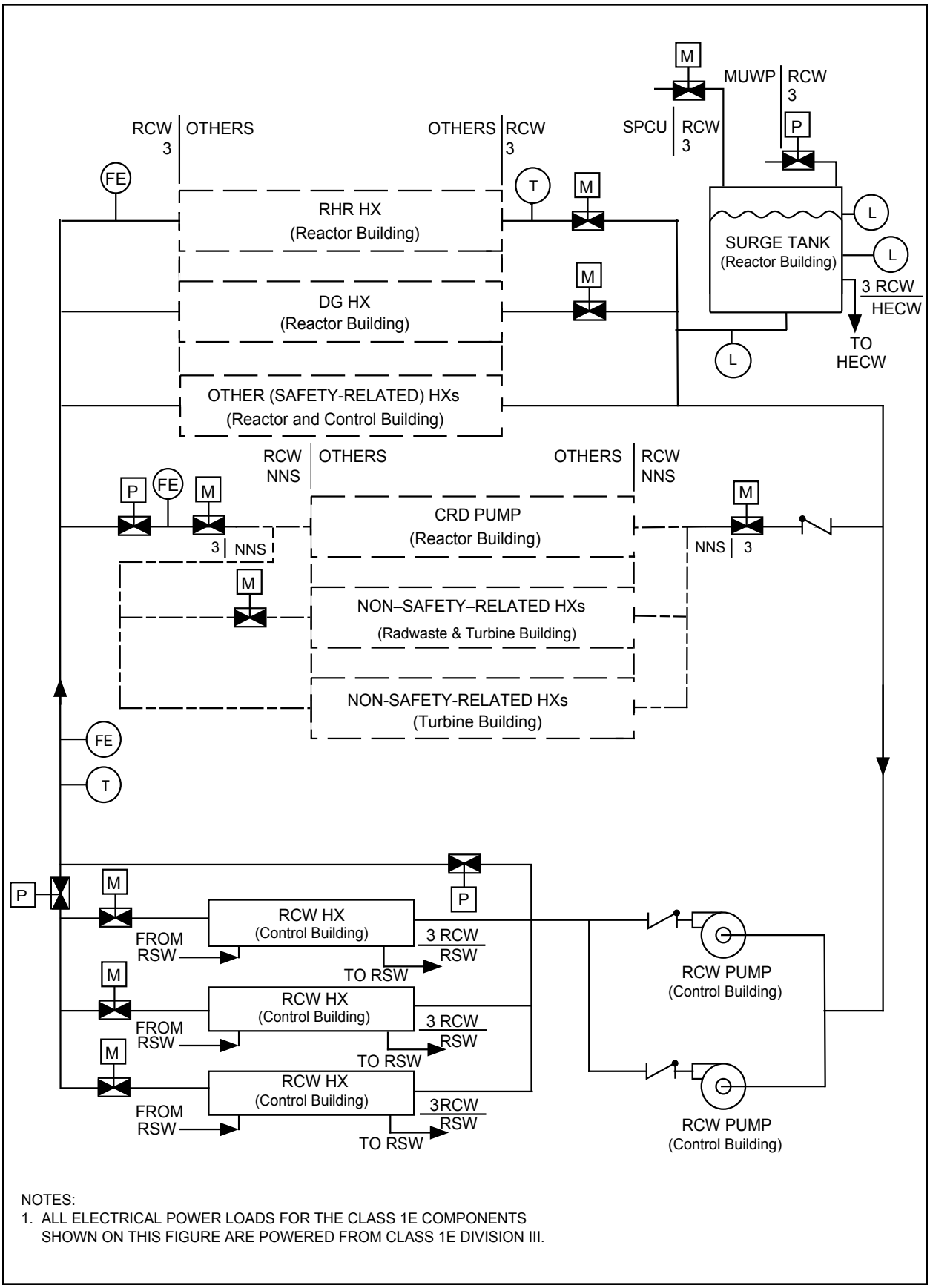

NOTES:
1. ALL ELECTRICAL POWER LOADS FOR THE CLASS 1E COMPONENTS SHOWN ON THIS FIGURE ARE POWERED FROM CLASS 1E DIVISION III.

Figure 2.11.3c Reactor Building Cooling Water System (RCW-C)

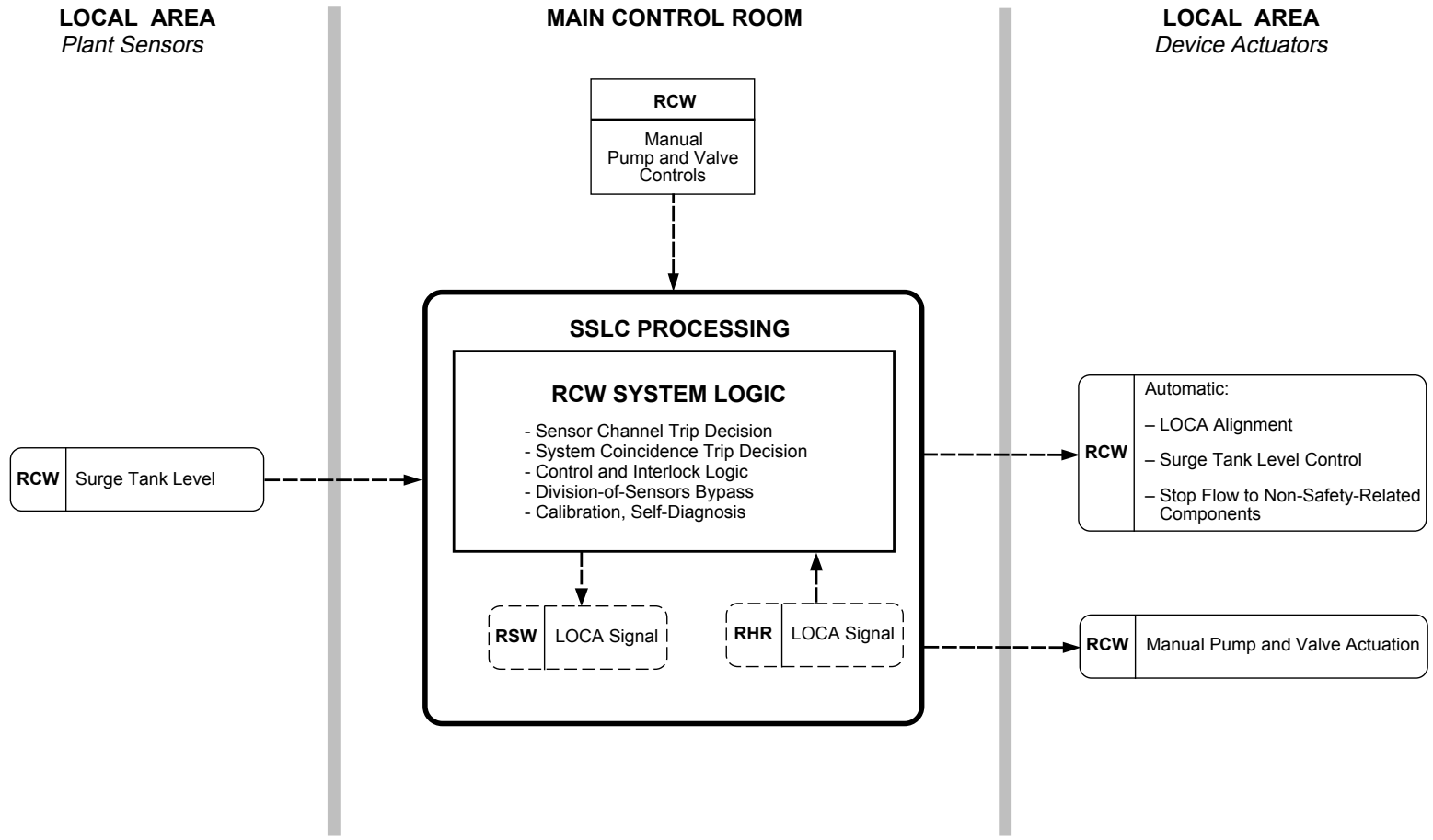

Notes:
1. Diagram represents one of three RCW divisions.
2. See Section 3.4, Figure 3.4b for SSLC processing.

Figure 2.11.3d Reactor Building Cooling Water System Control Interface Diagram

Table 2.11.3a Reactor Building Cooling Water Cooling Loads Division A

Operating Mode/Components*	Normal Operating Conditions	Shutdown	Hot Standby (loss of AC Power)	Emergency (LOCA)
RCW/RSW Heat Exchangers In Service	2	3	3	3
SAFETY-RELATED				
Emergency Diesel Generator A	†	†	‡	‡
RHR Heat Exchanger A	†	‡	‡	‡
Others (safety-related)ƒ	‡	‡	‡	‡
NON-SAFETY-RELATED				
CUW Heat Exchanger	‡	‡	‡	†
FPC Heat Exchanger A**	‡	‡	‡	‡
Inside Drywell	‡	‡	‡	†
Others (non-safety-related)	‡	‡	‡	‡

* Some of these cooling loads are serviced by only one or two RCW divisions. These components may be reassigned to other RCW divisions if redundancy and divisional alignment of supported and supporting systems is maintained and the design basis cooling capacity of the RCW divisions is assured.

† Equipment does not receive RCW in this mode.

‡ Equipment receives RCW in this mode.

ƒ HECW refrigerators, room coolers (RHR, RCIC, CAMS), RHR motor bearing and seal coolers, and CAMS cooler.

** Includes FPC room cooler.

Table 2.11.3b Reactor Building Cooling Water Cooling Loads Division B

Operating Mode/Components*	Normal Operating Conditions	Shutdown	Hot Standby (loss of AC Power)	Emergency (LOCA)
RCW/RSW Heat Exchangers In Service	2	3	3	3
SAFETY-RELATED				
Emergency Diesel Generator B	†	†	‡	‡
RHR Heat Exchanger B	†	‡	‡	‡
Others (safety-related)ƒ	‡	‡	‡	‡
NON-SAFETY-RELATED				
RWCU Heat Exchanger	‡	‡	‡	†
FPC Heat Exchanger B**	‡	‡	‡	‡
Inside Drywell	‡	‡	‡	†
Others (non-safety-related)	‡	‡	‡	‡

* Some of these cooling loads are serviced by only one or two RCW divisions. These components may be reassigned to other RCW divisions if redundancy and divisional alignment of supported and supporting systems is maintained and the design basis cooling capacity of the RCW divisions is assured.

† Equipment does not receive RCW in this mode.

‡ Equipment receives RCW in this mode.

ƒ HECW refrigerators, room coolers (RHR, HPCF, SGTS, FCS, CAMS), RHR and HPCF motor bearing and seal coolers, and CAMS cooler.

** Includes FPC room cooler.

Table 2.11.3c Reactor Building Cooling Water Cooling Loads Division C

Operating Mode/Components*	Normal Operating Conditions	Shutdown	Hot Standby (loss of AC Power)	Emergency (LOCA)
RCW/RSW Heat Exchangers In Service	2	3	3	3
SAFETY-RELATED				
Emergency Diesel Generator C	†	†	‡	‡
RHR Heat Exchanger C	†	‡	‡	‡
Others (safety-related)*f*	‡	‡	‡	‡
NON-SAFETY-RELATED				
Others (Non-safety-related)	‡	‡	‡	‡

* Some of these cooling loads are serviced by only one or two RCW divisions. These components may be reassigned to other RCW divisions if redundancy and divisional alignment of supported and supporting systems is maintained and the design basis cooling capacity of the RCW divisions is assured.

† Equipment does not receive RCW in this mode.

‡ Equipment receives RCW in this mode.

f HECW refrigerators; SGTS and FCS room coolers; room coolers, motor bearing coolers, and mechanical seal coolers for RHR and HPCF.

Table 2.11.3d Reactor Building Cooling Water (RCW) System

Inspections, Tests, Analyses and Acceptance Criteria		
Design Commitment	**Inspections, Tests, Analyses**	**Acceptance Criteria**
1. The basic configuration of the RCW System is as shown on Figures 2.11.2a, 2.11.2b and 2.11.2c.	1. Inspections of the as-built system will be conducted.	1. The as-built RCW System conforms with the basic configuration shown in Figures 2.11.2a, 2.11.2b and 2.11.2c.
2. The ASME Code components of the RCW System retain their pressure boundary integrity under internal pressures that will be experienced during service.	2. A hydrostatic test will be conducted on those Code components of the RCW System required to be hydrostatically tested by the ASME Code.	2. The results of the hydrostatic test of the ASME Code components of the RCW System conform with the requirements in the ASME Code, Section III.
3. The RCW System responses to a LOCA signal are as specified in Section 2.11.3.	3. Using simulated LOCA signals, tests will be performed for the RCW System.	3. Upon receipt of simulated LOCA signals, the responses of the RCW System are as specified in Section 2.11.3.
4. The RCW pump flow capacities and the RCW heat exchanger heat removal capacities are as specified in Section 2.11.3.	4. An analysis of the as-built RCW System will be performed. Tests will be performed of the flow capacities of the installed RCW pumps. Inspections and analyses will be performed to estimate the heat removal capacities of the RCW heat exchangers. Inspections and analyses will be performed to estimate the heat removal requirements of the as-built components which are cooled by the RCW System during LOCA conditions.	4. The estimated heat removal capacities of the as-built RCW System divisions exceed the estimated heat removal requirements of the components cooled by the RCW System divisions during LOCA conditions.
5. Each of the three RCW divisions is powered from its respective Class 1E division as shown in Figures 2.11.2a, 2.11.2b, and 2.11.2c. In the RCW System, independence is provided between the Class 1E divisions and also between the Class 1E divisions and non-Class 1E equipment.	5. a. Tests will be performed on the RCW System by providing a test signal in only one Class 1E division at a time. b. Inspections of the as-installed Class 1E Divisions in the RCW System will be performed.	5. a. The test signal exists only in the Class 1E division under test in the RCW System. b. Physical separation or electrical isolation exists between Class 1E divisions in the RCW System. Physical separation or electrical isolation exists between Class 1E divisions and non-Class 1E equipment.

Table 2.11.3d Reactor Building Cooling Water (RCW) System (Continued)

Inspections, Tests, Analyses and Acceptance Criteria		
Design Commitment	**Inspections, Tests, Analyses**	**Acceptance Criteria**
6. The safety-related portion of each mechanical division of the RCW System (Divisions A, B,C) is physically separated from the safety-related portions of the other divisions.	6. Inspections of the as-built RCW System will be performed.	6. The safety-related portions of each mechanical division of the RCW System is physically separated from the safety-related portions of the other mechanical divisions of the RCW System.
7. Main control room displays and controls provided for the RCW System are as defined in Section 2.11.3.	7. Inspections will be performed on the main control room displays and controls for the RCW System.	7. Displays and controls exist or can be retrieved in the main control room as defined in Section 2.11.3.
8. RSS displays and controls provided for the RCW system are as defined in Section 2.11.3.	8. Inspections will be performed on the RSS displays and controls for the RCW System.	8. Displays and controls exist on the RSS as defined in Section 2.11.3.
9. MOVs designated in Section 2.11.3 as having an active safety-related function will open, close, or both open and close under differential pressures, fluid flow, and temperature conditions.	9. Tests of installed valves for opening and closing, will be conducted under pre-operational differential pressure, fluid flow, and temperature conditions.	9. Upon receipt of the actuation signal, each MOV opens, closes, or both opens and closes, depending upon the valve's safety functions.
10. CVs, designated in Section 2.11.3 as having an active safety-related function, open, close, or both open and close under system pressure, fluid flow, and temperature conditions.	10. Tests of installed valves for opening, closing, or both opening and closing, will be conducted under system preoperational pressure, fluid flow, and temperature conditions.	10. Based on the direction of the differential pressure across the valve, each CV opens, closes, or both opens and closes, depending upon the valve's safety function.

Table 2.11.3d Reactor Building Cooling Water (RCW) System (Continued)

Inspections, Tests, Analyses and Acceptance Criteria		
Design Commitment	**Inspections, Tests, Analyses**	**Acceptance Criteria**
11. The pneumatic-operated valves shown in Figures 2.11.2a, 2.11.2b, and 2.11.2c fail as follows in the event that either electric power to the valve actuating solenoid is lost or pneumatic pressure to the valve is lost: MUWP makeup valves fail open, RCW water temperature control valves fail open, RCW heat exchanger bypass valves fail closed, and the safety-related/non-safety-related separation valves fail closed.	11. Tests will be performed on the as-built valves by initiating loss of pneumatic pressure and power to the actuating solenoids.	11. The pneumatic actuated valves listed below fail as desired when either electric power to the valve actuating solenoid is lost or pneumatic pressure to the valve is lost: MUWP makeup water valves fail open, RCW water temperature control valves fail open, RCW heat exchanger bypass valves fail closed, and the safety-related/non-safety-related separation valves fail closed.
12. A surge tank with a capacity of greater than or equal to 16 m^3 is provided for each RCW division.	12. Inspection and a volume calculation using as-built dimensions will be performed.	12. The capacity of the surge tanks is greater than or equal to 16 m^3.
13. A low surge tank water level signal opens the MUWP makeup valve and closes the pneumatic and motor-operated valves which stop flow to the non-safety-related components.	13. Tests will be performed on the as-built equipment.	13. The MUWP makeup valve opens and pneumatic and motor-operated valves which stop flow to the non-safety-related components close upon receipt of a low surge tank water level signal.

2.11.4 Turbine Building Cooling Water System

Design Description

The Turbine Building Cooling Water (TCW) System removes heat from the auxiliary equipment in the Turbine Building and rejects this heat to the Turbine Service Water (TSW) System. Figure 2.11.4 shows the basic system configuration and scope.

The TCW System is classified as a non-safety-related.

The TCW System is located inside the Turbine Building.

Inspections, Tests, Analyses and Acceptance Criteria

Table 2.11.4 provides a definition of the inspections, tests, and/or analyses, together with associated acceptance criteria, which will be undertaken for the TCW System.

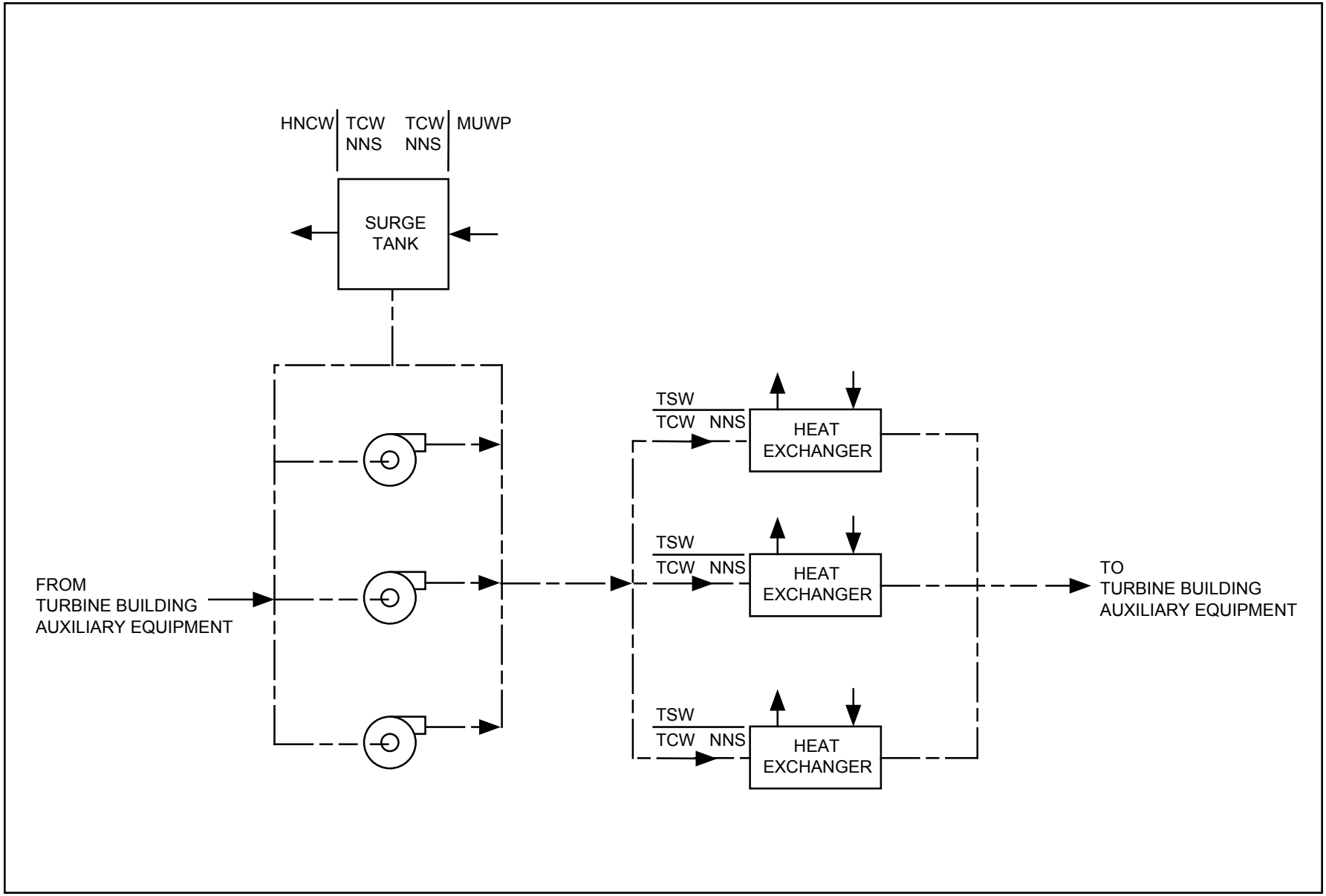

Figure 2.11.4 Turbine Building Cooling Water System

Table 2.11.4 Turbine Building Cooling Water System

Inspections, Tests, Analyses and Acceptance Criteria		
Design Commitment	**Inspections, Tests, Analyses**	**Acceptance Criteria**
1. The basic configuration for the TCW System is as shown on Figure 2.11.4.	1. Inspection of the as-built system will be conducted.	1. The as-built TCW System conforms with the basic configuration shown on Figure 2.11.4.

2.11.5 HVAC Normal Cooling Water System

Design Description

The Heating Ventilating and Air Conditioning (HVAC) Normal Cooling Water (HNCW) System delivers chilled water to the Drywell Cooling System and to non-safety-related fan coil units of building HVAC systems. Figure 2.11.5 shows the basic system configuration and scope.

The HNCW System is classified as non-safety-related with the exception of the primary containment isolation function.

The HNCW System pumps and refrigerators are located in the Turbine Building.

The primary containment penetrations and isolation valves are classified as Seismic Category I, and ASME Code Class 2.

The inboard containment isolation valves is powered from Class 1E Division II, and the outboard isolation valves are powered from Class 1E Division I. In the HNCW System, independence is provided is between Class 1E divisions, and also between the Class 1E divisions and non-Class 1E equipment.

The main control room has control and open/close status indication for the primary containment isolation valves.

The safety-related electrical equipment that provides primary containment isolation and is located in the primary containment and the Reactor Building is qualified for a harsh environment.

The primary containment isolation motor-operated valves (MOVs) shown on Figure 2.11.5 have active safety-related function to close and perform this function under differential pressure, fluid flow, and temperature conditions.

The check valve (CV) for containment isolation shown on Figure 2.11.5 has an active safety-related function to close under system pressure, fluid flow, and temperature conditions.

Inspections, Tests, Analyses and Acceptance Criteria

Table 2.11.5 provides a definition of the inspections, tests, and/or analyses, together with associated acceptance criteria, which will be undertaken for the HNCW System.

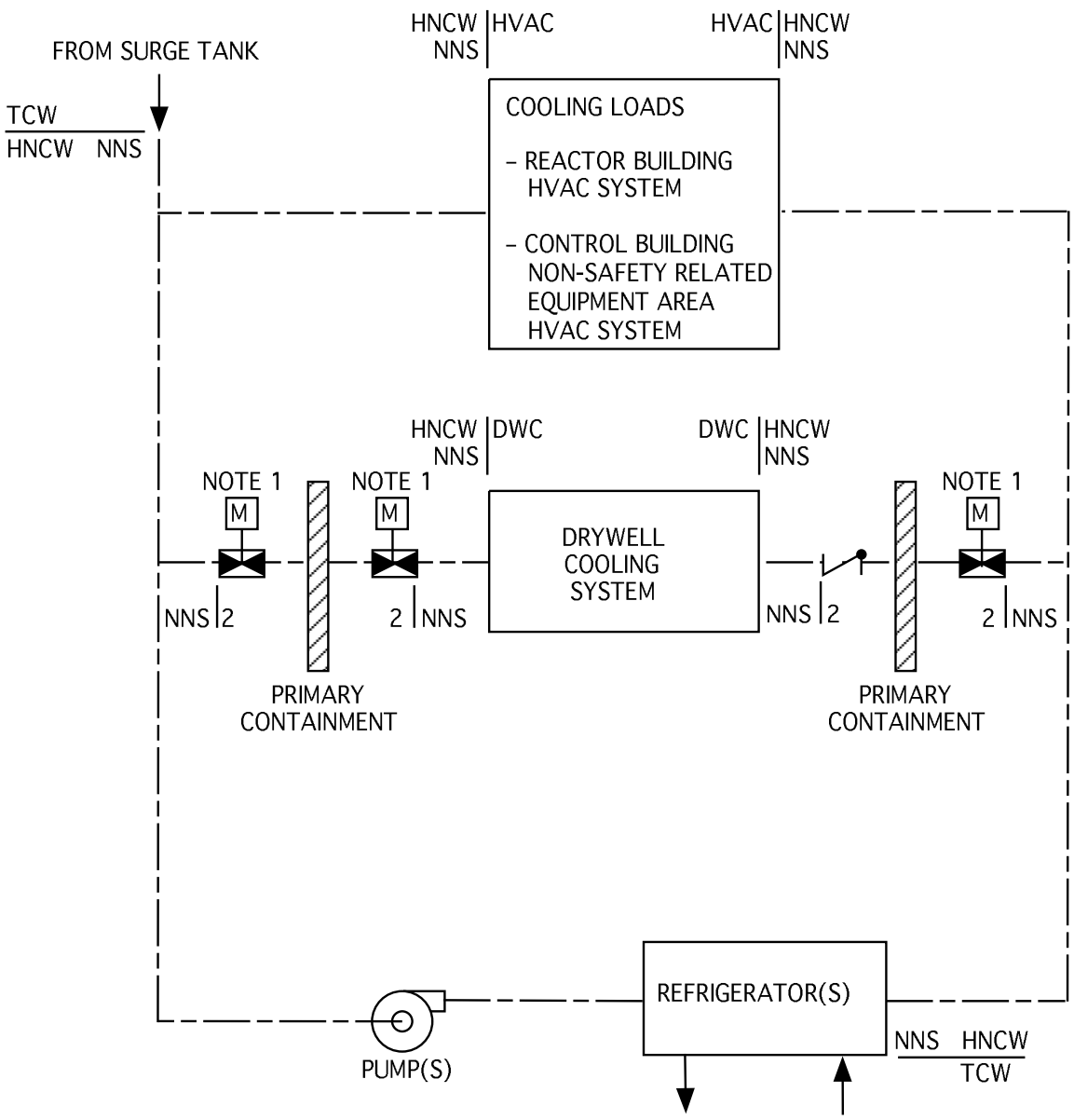

NOTES:
1. THE INBOARD ISOLATION VALVE IS POWERED FROM CLASS 1E DIVISION II, AND THE OUTBOARD ISOLATION VALVES ARE POWERED FROM CLASS 1E DIVISION I.

Figure 2.11.5 HVAC Normal Cooling Water System

Table 2.11.5 HVAC Normal Cooling Water (HNCW) System

Inspections, Tests, Analyses and Acceptance Criteria		
Design Commitment	**Inspections, Tests, Analyses**	**Acceptance Criteria**
1. The basic configuration of the HNCW System is as shown on Figure 2.11.5.	1. Inspections of the as-built system will be conducted.	1. The as-built HNCW System conforms with the basic configuration shown in Figure 2.11.5.
2. The ASME Code components of the HNCW retain their pressure boundary integrity under internal pressures that will be experienced during service.	2. A hydrostatic test will be conducted on those Code components of the HNCW System required to be hydrostatically tested by the ASME Code.	2. The results of the hydrostatic test of the ASME Code components of the HNCW System conform with the requirements in the ASME Code, Section III.
3. The inboard containment isolation valves is powered from Class 1E Division II, and the outboard isolation valves are powered from Class 1E Division I. In the HNCW System, independence is provided between Class 1E divisions, and between Class 1E divisions and non-Class 1E equipment.	3.	3.
	a. Tests will be performed on the HNCW System by providing a test signal in only one Class 1E division at a time.	a. The test signal exists only in the Class 1E division under test in the HNCW System.
	b. Inspection of the as-installed Class 1E divisions in the HNCW System will be performed.	b. In the HNCW System, physical separation or electrical isolation exists between Class 1E divisions. Physical separation or electrical isolation exists between these Class 1E divisions and non-Class 1E equipment.
4. Main control room displays and controls provided for HNCW System are as defined in Section 2.11.5.	4. Inspections will be performed on the main control room displays and controls for the HNCW System.	4. Displays and controls exist or can be retrieved in main control room as defined in Section 2.11.5.
5. MOVs designated in Section 2.11.5 as having an active safety-related function, close under differential pressure, fluid flow, and temperature conditions.	5. Tests of installed valves for closing will be conducted under preoperational differential pressure, fluid flow, and temperature conditions.	5. Upon receipt of the actuating signal, each MOV closes.

Table 2.11.5 HVAC Normal Cooling Water (HNCW) System

Inspections, Tests, Analyses and Acceptance Criteria		
Design Commitment	**Inspections, Tests, Analyses**	**Acceptance Criteria**
6. The CV designated in Section 2.11.5 as having an active safety-related function closes under system pressure, fluid flow, and temperature conditions.	6. Tests of the installed valve for closing will be conducted under system preoperational pressure, fluid flow, and temperature conditions.	6. The CV closes.

2.11.6 HVAC Emergency Cooling Water System

Design Description

The Heating Ventilating and Air Conditioning (HVAC) Emergency Cooling Water (HECW) System delivers chilled water to the:

(1) Control Room Habitability Area HVAC System.

(2) Control Building Safety-Related Equipment Area HVAC System.

(3) Reactor Building HVAC System (safety-related electrical equipment HVAC).

Figures 2.11.6a and 2.11.6b show the basic system configuration and scope.

The HECW System is classified as safety-related except for the chemical addition tank and associated piping and valves.

The HECW System is manually initiated.

Each HECW System refrigerator unit has a capacity of not less than 2.43 GJ/h. In Division A, the refrigerator unit on standby automatically starts if the other refrigerator unit is stopped. In Divisions B and C, any refrigerator unit on standby automatically starts if any of the other refrigerator units in Division B or C is stopped.

Safety-related portions of the HECW System are classified as Seismic Category I. Figures 2.11.6a and 2.11.6b show the ASME Code class for the HECW System piping and components.

The HECW System pumps and refrigerator units are located in the Control Building.

Each of the three HECW System divisions is powered from the respective Class 1E divisions as shown on Figures 2.11.6a and 2.11.6b. In the HECW System, independence is provided between Class 1E divisions, and also between Class 1E divisions and non-Class 1E equipment.

Except for the connections to the chemical addition tanks, each mechanical division of the HECW System (Divisions A, B, C) is physically separated from the other divisions.

The HECW System has the following main control room (MCR) displays and controls:

(1) Control and status indications for the refrigerator units and pumps shown on Figure 2.11.6a and 2.11.6b.

(2) Parameter displays for instruments shown on Figures 2.11.6a and 2.11.6b.

The check valves (CVs) shown on Figures 2.11.6a and 2.11.6b have active safety-related functions to open, close, or both open and close under system pressure, fluid flow, and temperature conditions.

The pneumatic-operated valves shown in Figures 2.11.6a and 2.11.6b fail as follows in the event that either electric power to the valve-actuating solenoid is lost or pneumatic pressure to the valve is lost: the differential pressure control valves fail closed, and the flow control valves to the cooling coils fail open.

Inspections, Tests, Analyses and Acceptance Criteria

Table 2.11.6 provides a definition of the inspections, tests, and/or analyses, together with associated acceptance criteria, which will be undertaken for the HECW System.

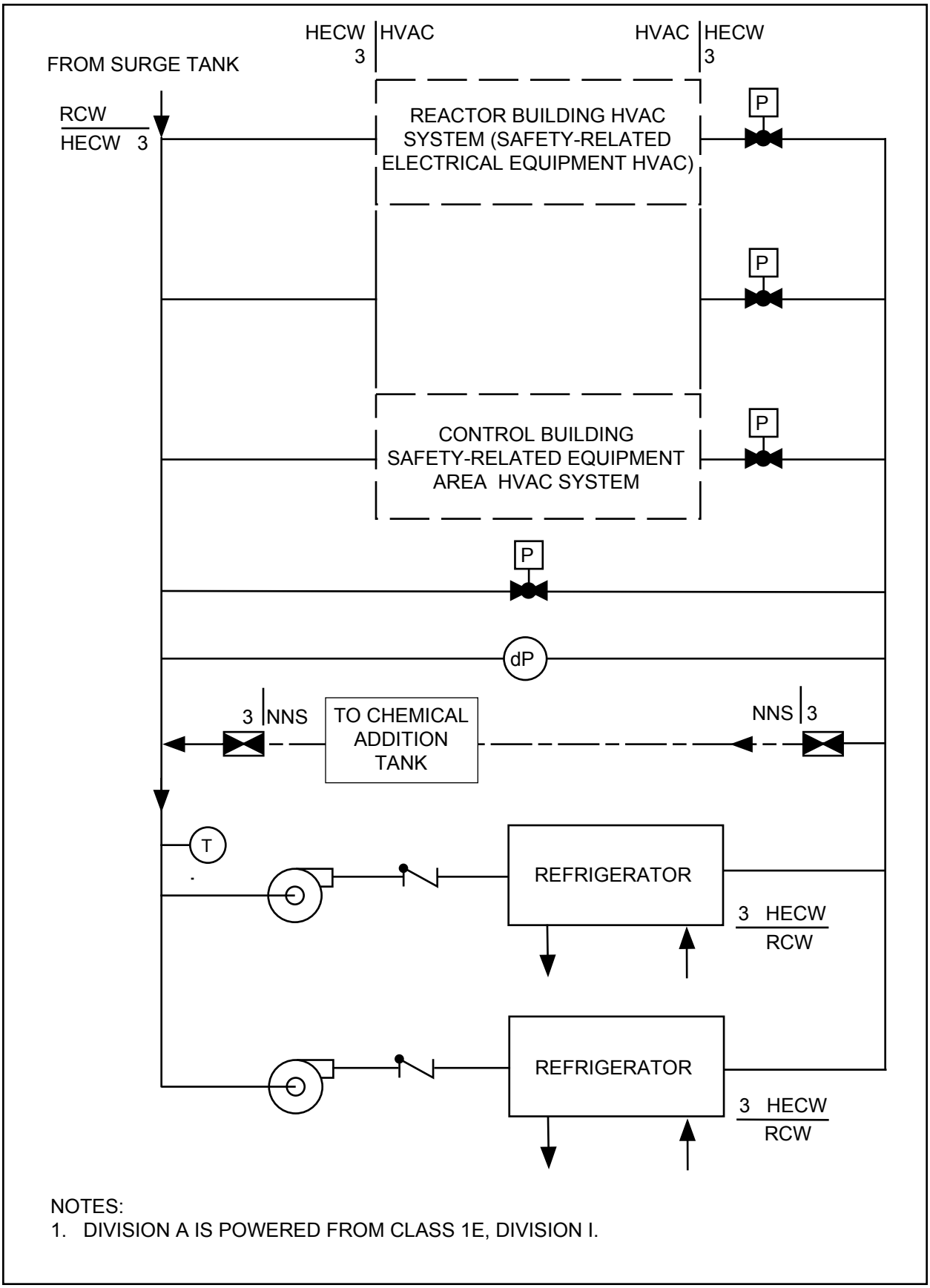

NOTES:
1. DIVISION A IS POWERED FROM CLASS 1E, DIVISION I.

Figure 2.11.6a HVAC Emergency Cooling Water System (HECW-A)

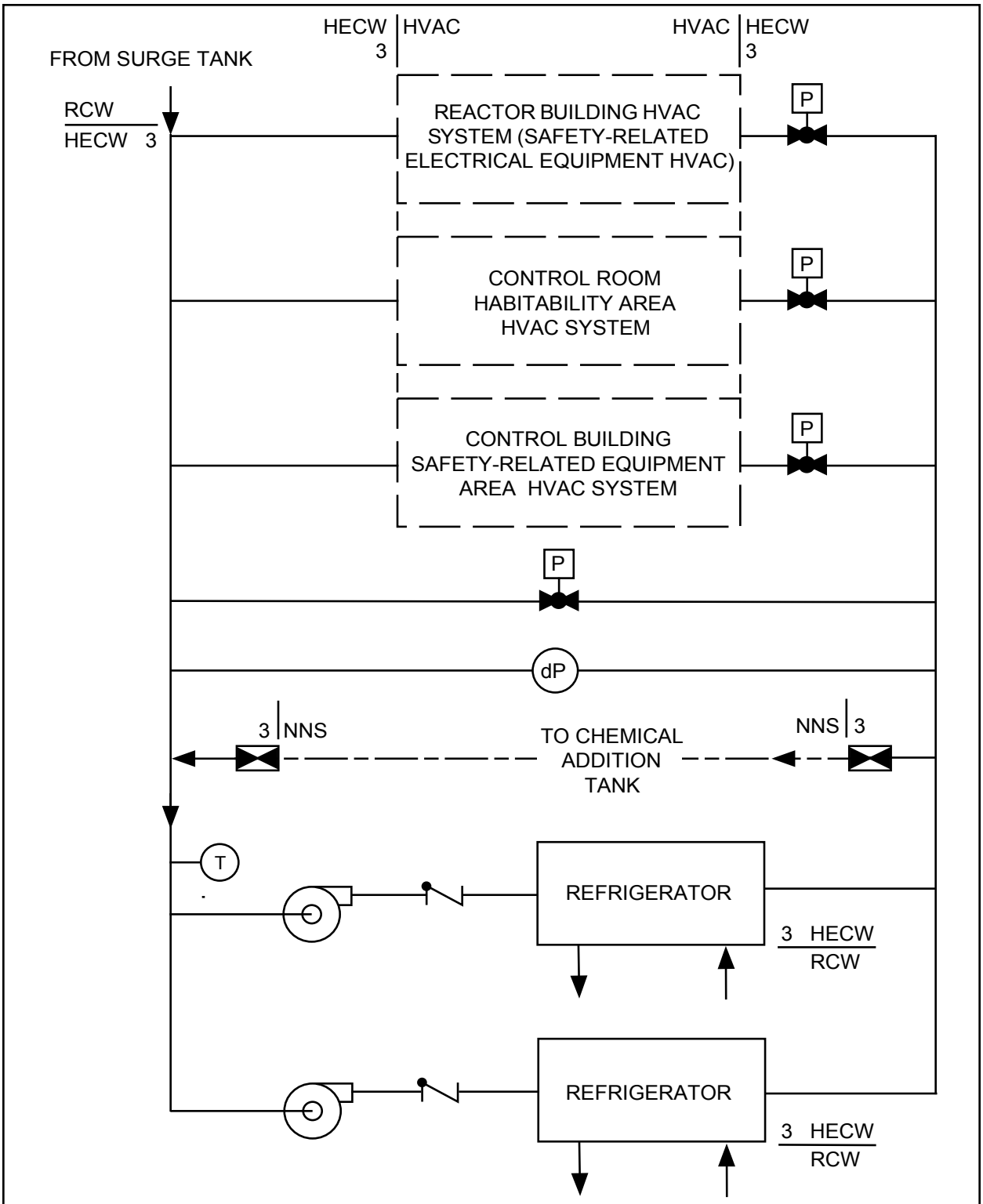

NOTES:
1. THIS FIGURE SHOWS ONE OF TWO SIMILAR DIVISIONS. DIVISIONS B AND C ARE POWERED FROM CLASS 1E, DIVISION II AND III, RESPECTIVELY.

Figure 2.11.6b HVAC Emergency Cooling Water System (HECW-B and C)

Table 2.11.6 HVAC Emergency Cooling Water System

Inspections, Tests, Analyses and Acceptance Criteria		
Design Commitment	**Inspections, Tests, Analyses**	**Acceptance Criteria**
1. The basic configuration for the HECW System is shown on Figures 2.11.6a and 2.11.6b.	1. Visual inspections of the as-built system configuration will be conducted.	1. The as-built configuration of the HECW System is in accordance with Figures 2.11.6a and 2.11.6b.
2. The ASME Code components of the HECW System retain their integrity under internal pressures that will be experienced during service.	2. A hydrostatic test will be conducted on those Code components of the HECW System required to be hydrostatically tested by the ASME Code.	2. The results of the hydrostatic test of the ASME Code components of the HECW System conform with the requirements in the ASME Code, Section III.
3. Each HEWC System refrigerator unit has a capacity of not less than 2.43 GJ/h.	3. Type tests will be conducted on an as-built HECW System refrigerator units at a test facility.	3. Each HEWC System refrigerator unit has a capacity of not less than 2.43 GJ/h.
4. In Division A, the refrigerator unit on standby automatically starts if the other refrigerator unit is stopped. In Divisions B and C, any refrigerator unit on standby automatically starts if any of the other refrigerator units in Divisions B or C is stopped.	4. Tests will be conducted on each as-built HECW System refrigerator unit in Divisions A, B and C, using simulated signals indicating another refrigerator unit is stopped.	4. In Division A, the refrigerator unit on standby automatically starts upon receipt of a simulated signal indicating that the other refrigerator unit is stopped. In Divisions B and C, the refrigerator unit on standby automatically starts upon receipt of a simulated signal indicating that any of the other refrigerator units in Divisions B or C is stopped.
5. Each of the three HECW System divisions is powered from the respective Class 1E divisions as shown on Figures 2.11.6a and 2.11.6b. In the HECW System, independence is provided between Class 1E divisions, and between Class 1E divisions and non-Class 1E equipment.	5. a. Tests will be performed on the HECW System by providing a test signal in only one Class 1E division at a time. b. Inspections of the as-built Class 1E divisions in the HECW System will be performed.	5. a. The test signal exists only in the Class 1E division under test in the HECW System. b. In the HECW System, physical separation or electrical isolation exists between Class 1E divisions. Physical separation or electrical isolation exists between these Class 1E divisions and non-Class 1E equipment.

Table 2.11.6 HVAC Emergency Cooling Water System (Continued)

Inspections, Tests, Analyses and Acceptance Criteria		
Design Commitment	**Inspections, Tests, Analyses**	**Acceptance Criteria**
6. Except for the connections to the chemical addition tank, each mechanical division of the HECW System (Divisions A, B, C) is physically separated from the other divisions.	6. Inspections of the as-built HECW System will be conducted.	6. Each mechanical division of the HECW System is physically separated from the other mechanical divisions of the HECW System by structural and/or fire barriers, with the exception connections to the chemical addition tank.
7. Main control room displays and controls provided for the HECW System are as defined in Section 2.11.6.	7. Inspections will be performed on the main control room displays and controls for the HECW System.	7. Displays and controls exist or can be retrieved in the main control room as defined in Section 2.11.6.
8. CVs designated in Section 2.11.6 as having an active safety-related function open, close, or both open and close under system pressure, fluid flow, and temperature conditions.	8. Tests of installed valves for opening, closing, or both opening and closing, will be conducted under system preoperational pressure, fluid flow, and temperature conditions.	8. Based on the direction of the differential pressure across the valve, each CV opens, closes, or both opens and closes, depending upon the valve's safety functions.
9. The pneumatic-operated valves shown in Figures 2.11.6a and 2.11.6b fail as follows in the event that either electric power to the valve actuating solenoid is lost or pneumatic pressure to the valve is lost: the differential pressure control valves fail closed, and the flow control valves to the cooling coils fail open.	9. Tests will be performed on the as-built valves by initiating loss of pneumatic pressure and power to the actuating solenoids.	9. The pneumatic actuated valves listed below fail as specified when either electric power to the valve actuating solenoid is lost or pneumatic pressure to the valve is lost: the differential pressure control valves fail closed, and the flow control valves to the cooling coils fail open.

2.11.7 Oxygen Injection System

No entry for this system.

2.11.8 This section not used.

2.11.9 Reactor Service Water System

Design Description

The Reactor Service Water (RSW) System removes heat from the Reactor Building Cooling Water (RCW) System and rejects this heat to the Ultimate Heat Sink (UHS). The portions of the RSW System that are in the Control Building are within the Certified Design. Those portions of the RSW System that are outside the Control Building are not in the Certified Design. Figure 2.11.9a shows the basic system configuration and scope within the Certified Design. Figure 2.11.9b shows the RSW System control interfaces.

The RSW System provides cooling water flow to either two or three of the RCW System heat exchangers in each division. On a loss-of-coolant accident and/or loss of preferred power (LOCA and/or LOPP) signal, any closed valves for standby heat exchangers are automatically opened and cooling flow is provided to all three heat exchangers in each division.

For each division of the RSW System, the heat exchanger inlet and outlet valves close upon receipt of a signal indicating Control Building flooding in that division.

The RSW System is classified as Seismic Category I and ASME Code Section III, Class 3 and consists of three separate safety-related divisions.

Each of the three RSW divisions is powered by its respective Class 1E division. In the RSW System, independence is provided between Class 1E divisions, and also between the Class 1E divisions and non-Class 1E equipment. Each mechanical division of the RCW system (Divisions A, B, C) is physically separated from the other divisions.

The RSW System has the following main control room (MCR) displays and controls: control and status displays for the valves shown on Figure 2.11.9a. The RSW System components with status displays and control interfaces with the Remote Shutdown System (RSS) are identified in Figure 2.11.9a.

The motor-operated valves (MOVs) shown on Figure 2.11.9a all have active safety-related functions to open and close under differential pressure and fluid flow conditions.

Interface Requirements

Part of the RSW System that are not within the Certified Design shall meet the following requirements:

(1) Design features shall be provided to limit the maximum flood height to 5.0 meters in each RCW heat exchanger room.

(2) The design shall have three divisions which are physically separated. For any structure(s) housing RSW System components, there shall be inter-divisional boundaries (including walls, floors, doors and penetrations) that have three-hour fire rating. In addition, there shall be inter-divisional flood control features which preclude flooding from occuring in more than one division. Each division shall be powered by its respective Class 1E division. Each division shall be capable of removing the design heat capacity (as specified in Section 2.11.3) of the RCW heat exchangers in its division.

(3) Upon receipt of a loss-of-coolant (LOCA) signal, components in standby mode shall start and/or align to the operating mode.

(4) RSW System Divisions A and B shall have control interfaces with the Remote Shutdown System (RSS) as required to support RSW operation during RSS design basis conditions.

(5) If required by the elevation relationships between the UHS and the RSW System components in the Control Building (C/B), the RSW System shall have antisiphon capability to prevent a C/B flood after an RSW System break and after the RSW System pumps have been stopped.

(6) RSW System pumps in any division shall be tripped on receipt of a signal indicating flooding in that division of the C/B basement area.

(7) Any tunnel structures used to route RSW System piping to the Control Building shall be classified as Seismic Category I. Tunnel flooding due to site flood conditions shall be precluded.

Inspections, Tests, Analyses and Acceptance Criteria

Table 2.11.9 provides a definition of the inspections, tests, and/or analyses, together with associated acceptance criteria, which will be undertaken for the portions of the RSW System within the Certified Design.

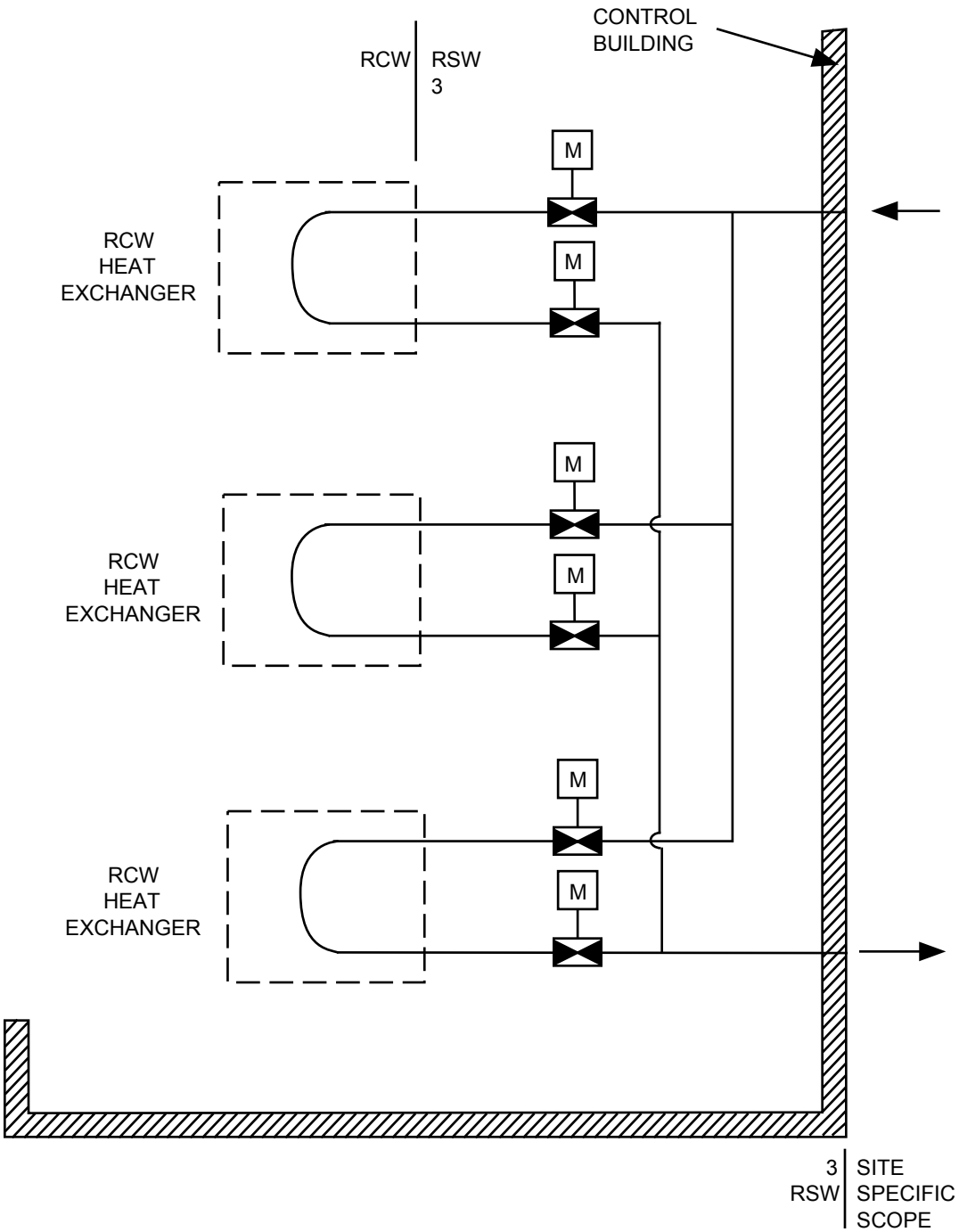

NOTES:

1. THIS FIGURE SHOWS ONE OF THREE SIMILAR DIVISIONS. ALL ELECTRICAL POWER LOADS FOR THE COMPONENT IN DIVISIONS A, B, AND C ARE POWERED FROM DIVISIONS I, II, AND III, RESPECTIVELY.

2. VALVES SHOWN ABOVE IN DIVISIONS A AND B HAVE CONTROLS AND OPEN/CLOSE STATUS DISPLAY ON THE REMOTE SHUTDOWN PANEL.

Figure 2.11.9a Reactor Service Water System

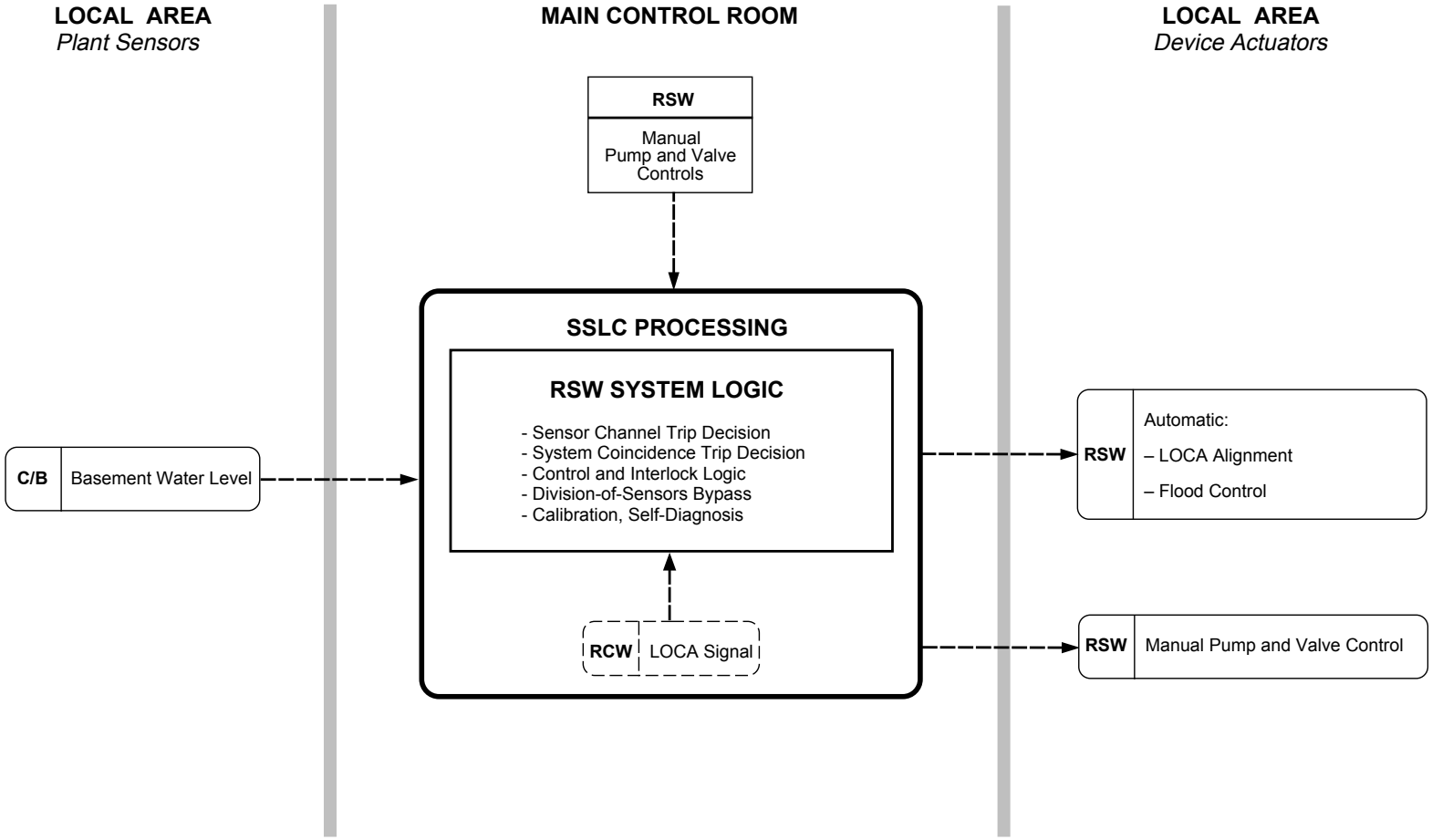

Notes:
1. Diagram represents one of three RSW divisions.
2. See Section 3.4, Figure 3.4b for SSLC Processing.

Figure 2.11.9b Reactor Service Water

Table 2.11.9 Reactor Service Water System

Inspections, Tests, Analyses and Acceptance Criteria		
Design Commitment	**Inspections, Tests, Analyses**	**Acceptance Criteria**
1. The basic configuration of the RSW System is as shown on Figure 2.11.9.	1. Inspections of the as-built system will be conducted.	1. The as-built RSW System conforms with the basic configuration shown in Figure 2.11.9.
2. The ASME Code components of the RSW System retain their pressure boundary integrity under internal pressures that will be experienced during service.	2. A hydrostatic test will be conducted on those Code components of the RSW System required to be hydrostatically tested by the ASME Code.	2. The results of the hydrostatic test of the ASME Code components of the RSW System conform with the requirements in the ASME Code, Section III.
3. On a LOCA and/or LOPP signal, any closed valves for standby heat exchangers are automatically opened.	3. Using simulated LOCA and/or LOPP signals, tests will be performed on standby heat exchanger inlet and outlet valves.	3. Upon receipt of simulated LOCA and/or LOPP signals, the standby heat exchanger inlet and outlet valves open.
4. For each division of RSW, the heat exchanger inlet and outlet valves close upon receipt of a signal indicating Control Building flooding in that division.	4. Using simulated signals, tests will be conducted on the heat exchanger inlet and outlet valves.	4. The heat exchanger inlet and outlet valves close upon receipt of a signal indicating Control Building flooding in that division.
5. Each of the three RSW divisions is powered by its respective Class 1E division. In the RSW System, independence is provided between Class 1E divisions, and between Class 1E divisions and non-Class 1E equipment.	5. a. Tests will be performed on the RSW System by providing a test signal in only one Class 1E division at a time. b. Inspections of the as-installed Class 1E divisions in the RSW System will be performed.	5. a. The test signal exists only in the Class 1E Division under test in the RSW System. b. Physical separation or electrical isolation exists between Class 1E divisions in the RSW System. Physical separation or electrical isolation exists between Class 1E divisions and non-Class 1E equipment.
6. Each mechanical division of the RSW System (Divisions A, B, C) is physically separated.	6. Inspections of the as-built system will be performed.	6. Each mechanical division of the RSW System is physically separated from other mechanical divisions of the RSW System by structural and/or fire barriers.

Table 2.11.9 Reactor Service Water System (Continued)

Inspections, Tests, Analyses and Acceptance Criteria		
Design Commitment	**Inspections, Tests, Analyses**	**Acceptance Criteria**
7. MCR displays and controls provided for the RSW System are as defined in Section 2.11.9.	7. Inspections will be performed on the MCR displays and controls for the RSW System.	7. Displays and controls exist or can be retrieved in the MCR as defined in Section 2.11.9.
8. RSS displays and controls provided for the RSW System are as defined in Section 2.11.9.	8. Inspections will be performed on the RSS displays and controls for the RSW System.	8. Indications and controls exist on the RSS as defined in Section 2.11.9.
9. MOVs designated in Section 2.11.9 as having an active safety-related function open and close under differential pressure, fluid flow, and temperature conditions.	9. Tests of installed valves, for opening and closing will be conducted under preoperational differential pressure, fluid flow, and temperature conditions.	9. Upon receipt of the actuating signal, each MOV opens and closes, depending on the valve's safety function.

2.11.10 Turbine Service Water System

Design Description

The Turbine Service Water (TSW) System removes heat from the Turbine Building Cooling Water (TCW) System and rejects this heat to the power cycle heat sink which is part of the Circulating Water System. The portions of the TSW System that are in the Turbine Building are within the Certified Design. Those portions of the TSW System that are outside the Turbine Building are not in the Certified Design. Figure 2.11.10 shows the basic system configuration and scope of the portion within the Certified Design.

The TSW System is classified as non-safety-related.

Interface Requirements

The portions of the TSW System which are not part of the Certified Design shall meet the following requirement:

- None identified for this system.

Inspections, Tests, Analyses and Acceptance Criteria

Table 2.11.10 provides a definition of the inspections, tests, and/or analyses, together with associated acceptance criteria, which will be undertaken, for the portions of the TSW System within the Certified Design.

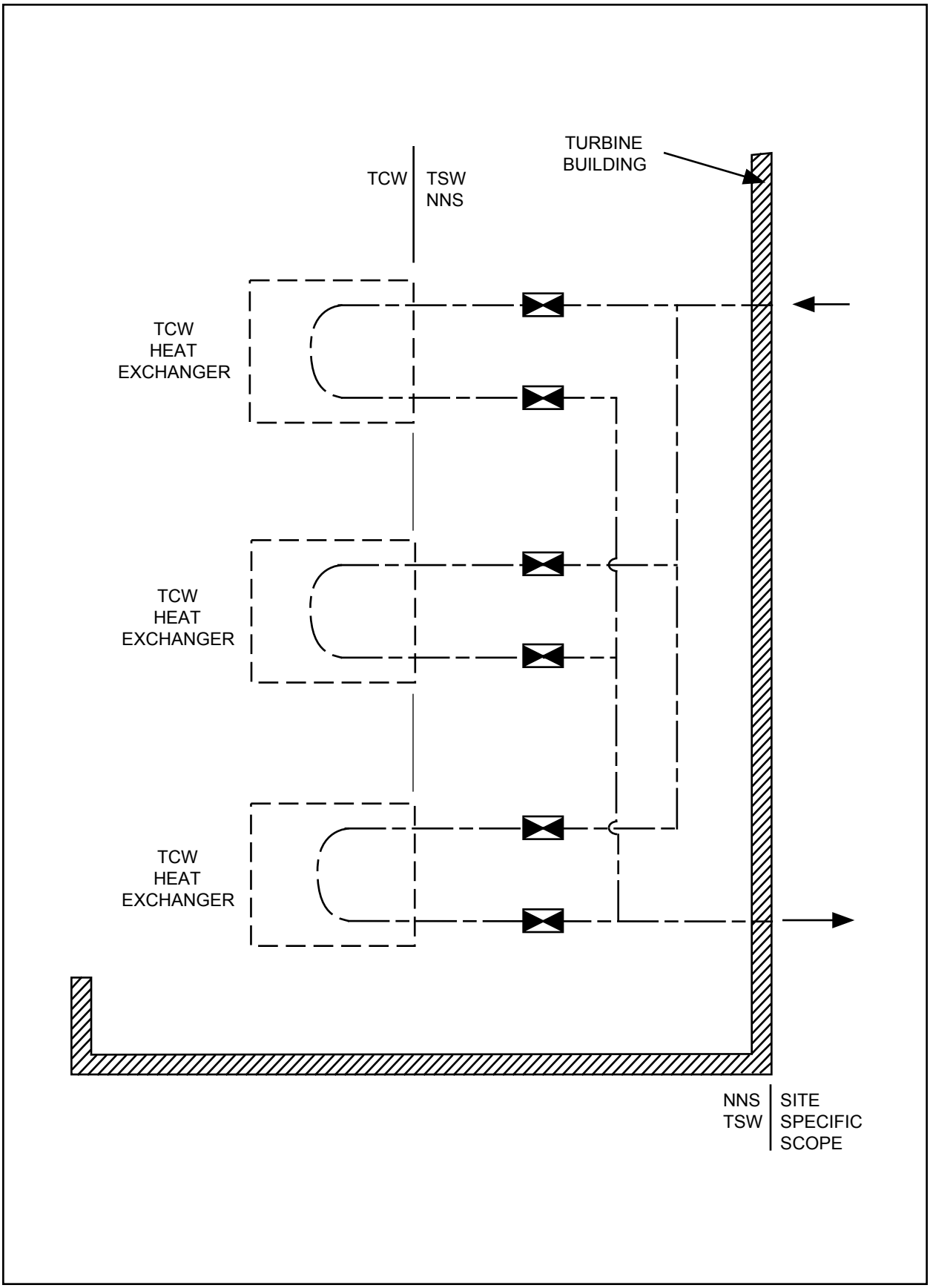

Figure 2.11.10 Turbine Service Water System

Table 2.11.10 Turbine Service Water System

Inspections, Tests, Analyses and Acceptance Criteria		
Design Commitment	**Inspections, Tests, Analyses**	**Acceptance Criteria**
1. The basic configuration of the TSW System is as shown on Figure 2.11.10.	1. Inspections of the as-built system will be conducted.	1. The as-built TSW System conforms with the basic configuration shown on Figure 2.11.10.

2.11.11 Station Service Air System

Design Description

The Station Service Air (SA) System consists of two air compressing trains, an air receiver tank, two trains of filters, piping, valves, controls and instrumentation. Figure 2.11.11 shows basic SA System configuration and scope.

The SA System provides compressed air for general plant use. The SA System also provides backup to the Instrument Air (IA) System in the event that IA System pressure is lost.

Except for the containment penetration and isolation valves, the SA System is classified as non-safety-related.

The containment penetration and isolation valves are classified as Seismic Category I. Figure 2.11.11 shows the ASME Code class for the SA System components.

The check valve (CV) for containment isolation shown on Figure 2.11.11 has an active safety-related function to close under system pressure, fluid flow, and temperature conditions.

Inspections, Tests, Analyses and Acceptance Criteria

Table 2.11.11 provides a definition of inspections, tests, and/or analyses, together with associated acceptance criteria, which will be undertaken for the SA System.

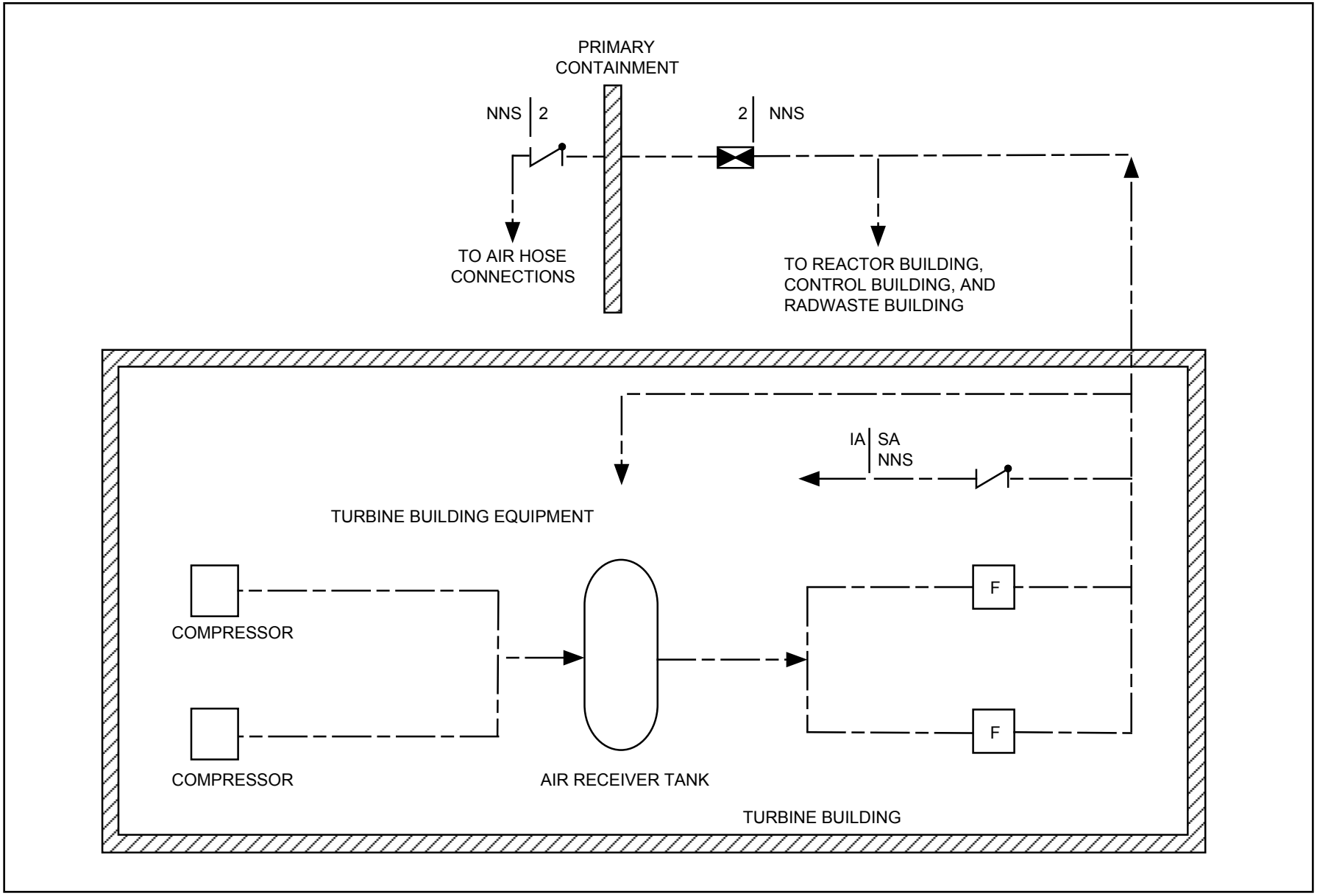

Figure 2.11.11 Station Service Air System

Table 2.11.11 Station Service Air System

Inspections, Tests, Analyses and Acceptance Criteria		
Design Commitment	**Inspections, Tests, Analyses**	**Acceptance Criteria**
1. The basic configuration of the SA System is as shown on Figure 2.11.11.	1. Inspections of the as-built system will be conducted.	1. The as-built SA System conforms with the basic configuration shown on Figure 2.11.11.
2. The ASME Code components of the SA System retain their pressure boundary integrity under internal pressures that will be experienced during service.	2. A pressure test will be conducted on those Code components of the SA System required to be pressure tested by the ASME Code.	2. The results of the pressure test of the ASME Code components of the SA System conform with the requirements in ASME Code Section III.
3. The CV designated in Section 2.11.11 as having an active safety-related function closes, under system pressure, fluid flow, and temperature conditions.	3. Tests of the installed valve for closing will be conducted under system preoperational pressure, fluid flow, and temperature conditions.	3. The CV closes.

2.11.12 Instrument Air System

Design Description

The Instrument Air (IA) System consists of two air compressing trains, an air receiver tank, two drying trains, piping, valves, controls and instrumentation. Figure 2.11.12 shows the basic IA System configuration and scope.

The IA System provides compressed air for pneumatic equipment, valves, controls and instrumentation outside the primary containment.

The IA System distribution piping penetrates the primary containment. During plant operation, this line is supplied with nitrogen by the High Pressure Nitrogen Gas Supply (HPIN) System. In the event that HPIN System pressure is lost, the IA System provides air backup by remote manual alignment of IA System.

Except for the containment penetration and isolation valves, the IA System is classified as non-safety-related.

The IA containment penetration and isolation valves are classified as Seismic Category I. Figure 2.11.12 shows the ASME Code class for the IA System piping and components.

The IA System containment isolation valve is powered from Class 1E Division I. In the IA System, independence is provided between the Class 1E division and non-Class 1E equipment.

The main control room has controls and open/close status indication for the containment isolation valve.

The safety-related electrical equipment that provides containment isolation and is located outside primary containment in the Reactor Building is qualified for a harsh environment.

The motor-operated valve (MOV) shown on Figure 2.11.12 has an active safety-related function to close and perform this function under differential pressure, fluid flow, and temperature conditions.

The check valve (CV) for containment isolation shown on Figure 2.11.12 has an active safety-related function to close under system pressure, fluid flow, and temperature conditions.

Inspections, Tests, Analyses and Acceptance Criteria

Table 2.11.12 provides a definition of inspections, tests, and/or analyses, together with associated acceptance criteria, which will be undertaken for the IA System.

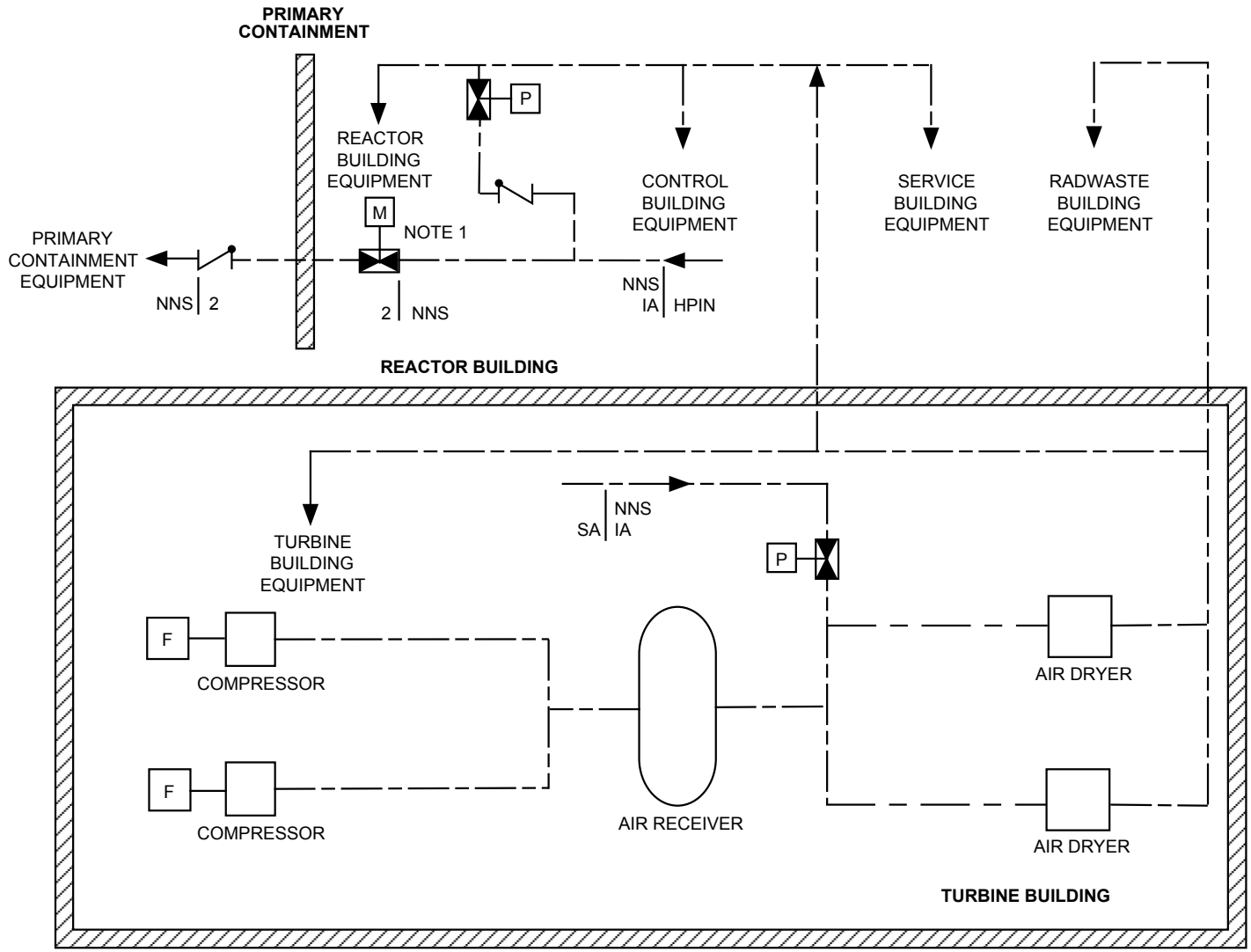

NOTES:
1. CONTAINMENT ISOLATION VALVE IS POWERED FROM CLASS 1E DIVISION I.

Figure 2.11.12 Instrument Air System

Table 2.11.12 Instrument Air System

Inspections, Tests, Analyses and Acceptance Criteria		
Design Commitment	**Inspections, Tests, Analyses**	**Acceptance Criteria**
1. The basic configuration of the IA System is shown on Figure 2.11.12.	1. Inspections of the as-built IA System will be conducted.	1. The as-built IA System conforms with the basic configuration shown on Figure 2.11.12.
2. The ASME Code components of the IA System retain their pressure boundary integrity under internal pressures that will be experienced during service.	2. A pressure test will be conducted on those Code components of the IA System required to be pressure tested by the ASME Code.	2. The results of the pressure test of the ASME Code components of the IA System conform with the requirements in ASME Code Section III.
3. The IA System containment isolation valve is powered from Class 1E Division I. In the IA System, independence is provided between the Class 1E division and non-Class 1E equipment.	3.	3.
	a. Tests will be performed on the IA System by providing a test signal in only one Class 1E division at a time.	a. The test signal exists in the IA System only when the signal is applied to the division associated with the IA System.
	b. Inspection of the as-installed Class 1E division in the IA System will be performed.	b. In the IA System, physical separation or electrical isolation exists between the Class 1E division and non-Class 1E equipment.
4. Main control room displays and controls provided for the IA System are as defined in Section 2.11.12.	4. Inspections will be performed on the main control room displays and controls for the IA System.	4. Displays and controls exist or can be retrieved in the main control room as defined in Section 2.11.12.
5.	5.	5.
a. The MOV designated in Section 2.11.12 as having an active safety-related function closes under differential pressure, fluid flow, and temperature conditions.	a. Tests of the installed valve for closing will be conducted under preoperational differential pressure, fluid flow, and temperature conditions.	a. Upon receipt of the actuating signal the MOV closes.
b. The CV designated in Section 2.11.12 as having an active safety-related function closes under system pressure, fluid flow, and temperature conditions.	b. Tests of installed valve for closing will be conducted under system preoperational pressure, fluid flow, and temperature conditions.	b. The CV closes.

2.11.13 High Pressure Nitrogen Gas Supply System

Design Description

The High Pressure Nitrogen Gas Supply (HPIN) System provides nitrogen to pneumatic equipment inside the primary containment. Figure 2.11.13 shows the basic HPIN System configuration and scope.

The HPIN System consists of:

(1) Two divisional systems (Divisions A and B) which are supplied from bottled nitrogen supplies. These systems can supply nitrogen to the automatic depressurization system (ADS) accumulators on the safety/relief valves (SRVs).

(2) A non-divisional system that is supplied from the Atmospheric Control (AC) System. This system can supply nitrogen to the non-ADS and ADS accumulators on the SRVs.

The two divisional systems and the containment penetrations and isolation valves on the non-divisional system are classified as safety-related.

During operation, all SRV accumulators are supplied from the non-divisional system. If the pressure sensor in either of the safety-related systems indicates low pressure, the valve between that system and the non-divisional system closes and the supply valve to the bottled nitrogen supply in that division opens. If the pressure sensor in the non-divisional system indicates a low pressure, the valves between the non-divisional and the divisional systems close.

The capacity of the bottled nitrogen supply in each HPIN division maintains the ADS valves in that division in an open condition for a period of at least seven days following a design basis accident.

The two divisional systems and the containment penetration and isolation valves in the non-divisional system are classified as Seismic Category I. Figure 2.11.13 shows the ASME Code class for the HPIN System piping and components.

Except for the isolation valves and distribution piping inside the primary containment, the HPIN System is located in the Reactor Building.

Each of the two HPIN divisions is powered from the respective Class 1E division as shown on Figure 2.11.13. In the HPIN System, independence is provided between the Class 1E divisions, and also between the Class 1E divisions and non-Class 1E equipment.

Outside the primary containment and except for the interconnection through the non-divisional system, each mechanical division (Divisions A and B) is physically separated from the other division.

The HPIN System has the following displays and controls in the main control room:

(1) Parameter displays for the sensors shown on Figure 2.11.13.

(2) Control and status indication for the active safety-related components shown on Figure 2.11.13.

The safety-related electrical equipment shown on Figure 2.11.13 located in the Reactor Building is qualified for a harsh environment.

The motor-operated valves (MOVs) shown on Figure 2.11.13 have active safety-related functions to open, close, or both open and close, and perform these functions under differential pressure, fluid flow, and temperature conditions.

The check valves (CVs) shown on Figure 2.11.13, have active safety-related functions to both open and close under system pressure, fluid flow, and temperature conditions.

Inspections, Tests, Analyses and Acceptance Criteria

Table 2.11.13 provides a definition of the inspections, tests, and/or analyses, together with associated acceptance criteria, which will be undertaken for the HPIN System.

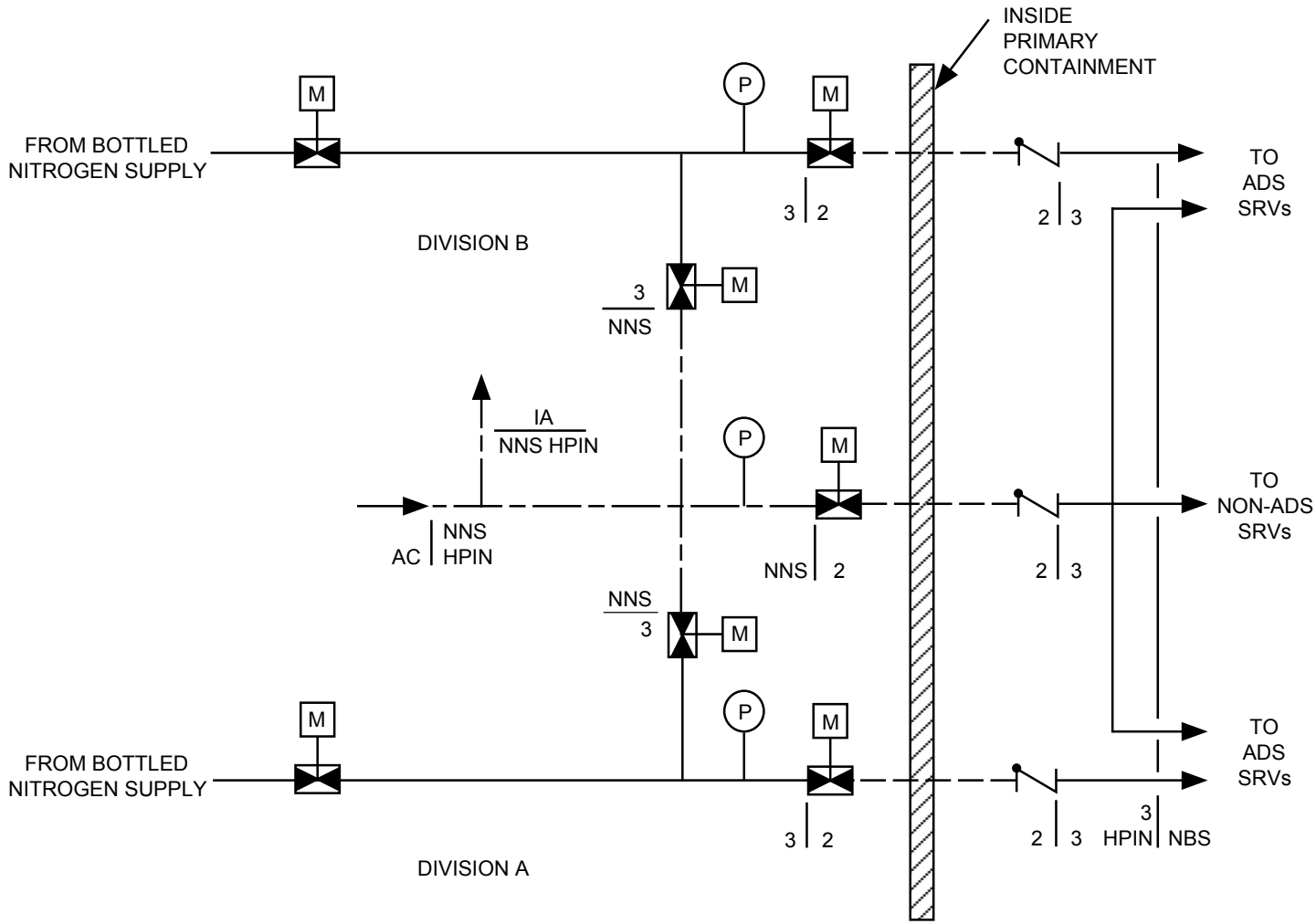

NOTES:
1. HPIN SYSTEM DIVISION-A IS POWERED FROM CLASS 1E DIVISION I, AND HPIN SYSTEM DIVISION-B IS POWERED FROM CLASS 1E DIVISION II. THE CONTAINMENT ISOLATION VALVE OF NON-DIVISIONAL PORTION OF THE HPIN SYSTEM IS POWERED FROM CLASS 1E DIVISION I.

Figure 2.11.13 High Pressure Nitrogen Gas Supply System

Table 2.11.13 High Pressure Nitrogen Gas Supply System

Inspections, Tests, Analyses and Acceptance Criteria		
Design Commitment	**Inspections, Tests, Analyses**	**Acceptance Criteria**
1. The basic configuration of the HPIN System is as shown on Figure 2.11.13.	1. Inspections of the as-built system will be conducted.	1. The as-built HPIN System conforms with the basic configuration shown on Figure 2.11.13.
2. The ASME Code components of the HPIN System retain their pressure boundary integrity under internal pressures that will be experienced during service.	2. A pressure test will be conducted on those Code components of the HPIN System required to be pressure tested by the ASME Code.	2. The results of the pressure test of the ASME Code components of the HPIN System conform with the requirements in ASME Code Section III.
3. If the pressure sensor in either of the safety-related systems indicates low pressure, the valve between that system and the non-divisional system closes and the supply valve to the bottled nitrogen supply in that division opens.	3. Tests will be conducted on each division of the as-built HPIN System using simulated pressure signals.	3. If the pressure sensor in either of the safety-related systems indicates low pressure, the valve between that system and the non-divisional system closes and the supply valve to the bottled nitrogen supply in that division opens.
4. If the pressure sensor in the non-divisional system indicates a low pressure, the valves between the non-divisional and the divisional systems close.	4. Tests will be conducted on the as-built HPIN System using simulated pressure signals.	4. If the pressure sensor in the non-divisional system indicates a low pressure, the valves between the non-divisional and the divisional systems close.
5. The capacity of the bottled nitrogen in each HPIN division maintains the ADS valves in that division in an open condition for a period of at least seven days following a design basis accident.	5. Analyses of the installed HPIN will be performed. The analyses will consider nitrogen leakage from the ADS actuators when maintaining the ADS valves open. Leakage from HPIN components when the system is in this mode will also be considered. The analyses will compare the total storage capacity in each division with the total leakage that occurs in a seven day period.	5. The capacity of the bottled nitrogen in each HPIN division maintains the ADS valves in that division in an open condition for a period of at least seven days following a design basis accident.

Table 2.11.13 High Pressure Nitrogen Gas Supply System (Continued)

Inspections, Tests, Analyses and Acceptance Criteria		
Design Commitment	**Inspections, Tests, Analyses**	**Acceptance Criteria**
6. Each of the two HPIN divisions is powered from the respective Class 1E division as shown on Figure 2.11.13. In the HPIN System, independence is provided between Class 1E divisions, and between Class 1E divisions and non-Class 1E equipment.	6. a. Tests will be performed in the HPIN System by providing a test signal in only one Class 1E division at a time. b. Inspections of the as-installed Class 1E divisions in the HPIN System will be performed.	6. a. The test signal exists only in the Class 1E division under test in the HPIN System. b. In the HPIN System, physical separation or electrical isolation exists between Class 1E divisions. Physical separation or electrical isolation exists between these Class 1E divisions and non-Class 1E equipment.
7. Outside the primary containment and except for the interconnection through the non-divisional system, each mechanical division (Divisions A and B) of the HPIN System is physically separated from the other division.	7. Inspections of the as-built HPIN System will be conducted.	7. Outside the primary containment and except for the interconnection through the non-divisional system, each mechanical division (Divisions A and B) of the HPIN System is physically separated from the other division by structural and/or fire barriers.
8. Main control room displays and controls provided for the HPIN System are as defined in Section 2.11.13.	8. Inspections will be performed on the main control room displays and controls for the HPIN System.	8. Displays and controls exist or can be retrieved in the main control room as defined in Section 2.11.13.
9. a. MOVs designated in Section 2.11.13 as having an active safety-related function open, close, or both open and close under differential pressure, fluid flow, and temperature conditions.	9. a. Tests of installed valves for opening, closing, or both opening and closing will be conducted under preoperational differential pressure, fluid flow, and temperature conditions.	9. a. Upon receipt of the actuating signal, each MOV opens, closes, or both opens and closes, depending upon the valve's safety functions.

Table 2.11.13 High Pressure Nitrogen Gas Supply System (Continued)

Inspections, Tests, Analyses and Acceptance Criteria		
Design Commitment	**Inspections, Tests, Analyses**	**Acceptance Criteria**
b. CVs designated in Section 2.11.13 as having an active safety-related function both open and close, under system pressure, fluid flow, and temperature conditions.	b. Tests of installed valves for both opening and closing, will be conducted under system pre-operational pressure, fluid flow, and temperature conditions.	b. Based on the direction of the differential pressure across the valve, each CV both opens and closes.

2.11.14 Heating Steam and Condensate Water Return System

No entry for this system.

2.11.15 House Boiler

No entry for this system.

2.11.16 Hot Water Heating System

No entry for this system.

2.11.17 Hydrogen Water Chemistry System

No entry for this system.

2.11.18 Zinc Injection System

No entry for this system.

2.11.19 Breathing Air System

No entry for this system.

2.11.20 Sampling System

Design Description

The Sampling (SAM) System obtains samples from systems throughout the plant. A part of the SAM System is a post-accident sampling system (PASS). The PASS takes post-accident gas samples from the primary containment and reactor coolant samples for analysis. The PASS collects samples during and after an accident and is shielded and remotely operated.

The PASS collects reactor coolant samples for measurement of boron and radionuclides (noble gases, iodines, cesiums and non-volatile isotopes).

The SAM System and PASS are classified as non-safety-related.

Inspections, Tests, Analyses and Acceptance Criteria

Table 2.11.20 provides a definition of the inspections, tests, and/or analyses, together with associated acceptance criteria, which will be undertaken for the SAM System.

Table 2.11.20 Sampling System

Inspections, Tests, Analyses and Acceptance Criteria		
Design Commitment	**Inspections, Tests, Analyses**	**Acceptance Criteria**
1. The basic configuration of the SAM System is as described in Section 2.11.20.	1. Inspections of the as-built system will be conducted.	1. The as-built SAM System conforms with the basic configuration described in Section 2.11.20.
2. The PASS collects samples of containment gases and reactor coolant.	2. A test of the as-built PASS will be conducted to obtain samples.	2. Containment gas and reactor coolant samples are collected by the PASS.

2.11.21 Freeze Protection System

No entry for this system.

2.11.22 Iron Injection System

No entry for this system.

2.11.23 Potable and Sanitary Water System

Design Description

The Potable and Sanitary Water (PSW) System provides water to the Reactor Building, Control Building, Turbine Building, Radwaste Building and Service Building and collects liquid sanitary wastes and entrained solids and conveys them to a sewage facility and then to a site discharge structure. Nonradioactive drain subsystems throughout the plant collect nonradioactive waste water and convey it to the site discharge structure. Water is supplied to the PSW System by the Makeup Water Preparation System.

Those parts of the PSW System that are within the Reactor Building, Control Building, Turbine Building, Radwaste Building and Service Building are within the Certified Design. Those parts of the PSW System that are outside these buildings are not within the scope of the Certified Design.

The PSW System is classified as non-safety-related.

The PSW System has no interconnections with radioactive systems having the potential for transferring radioactive materials into the PSW System.

Interface Requirements

The portions of the PSW System which are not part of the Certified Design shall meet the following requirement:

- None for this system.

Inspections, Tests, Analyses and Acceptance Criteria

Table 2.11.23 provides a definition of the inspections, tests, and/or analyses, together with associated acceptance criteria, which will be undertaken for the portions of the PSW System within the Certified Design.

Table 2.11.23 Potable and Sanitary Water System

Inspections, Tests, Analyses and Acceptance Criteria		
Design Commitment	**Inspections, Tests, Analyses**	**Acceptance Criteria**
1. The basic configuration for the PSW System is as described in Section 2.11.23.	1. Inspections of the as-built system will be conducted.	1. The as-built PSW System conforms with the basic configuration described in Section 2.11.23.
2. The PSW System has no interconnections with radioactive systems having the potential for transferring radioactive materials into the PSW System.	2. Tests will be conducted on the as-built nonradioactive drain system by pressurizing radioactive floor drains with water and observing the nonradioactive drains for evidence of inleakage from the radioactive floor drains.	2. No water inleakage from the radioactive drains in to the PSW System is observed.

2.12.1 Electrical Power Distribution System

Design Description

The AC Electrical Power Distribution (EPD) System consists of the transmission network (TN), the plant switching stations, the Main Power Transformer (MPT), the Unit Auxiliary Transformers (UAT), the Reserve Auxiliary Transformer(s) (RAT(s)), the plant main generator (PMG) output circuit breaker, the medium voltage metal-clad (M/C) switchgear, the low voltage power center (P/C) switchgear, and the motor control centers (MCCs). The distribution system also includes the power, instrumentation and control cables and bus ducts to the distribution system loads, and the protection equipment provided to protect the distribution system equipment. The EPD System within the scope of the Certified Design starts at the low voltage terminals of the MPT and the low voltage terminals of the RAT(s) and ends at the distribution system loads. Interface requirements for the TN, plant switching stations, MPT, and RAT(s) are specified below.

The plant EPD System can be supplied power from multiple power sources; these are independent transmission lines from the TN, the PMG, and the combustion turbine generator (CTG). In addition, the EPD System can be supplied from three onsite Class 1E Standby Power Sources (Emergency Diesel Generators (DGs)). The Class 1E portion of the EPD System is shown in Figure 2.12.1.

During plant power operation, the PMG supplies power through the PMG output circuit breaker through the MPT to the TN, and to the UATs. When the PMG output circuit breaker is open, power is backfed from the TN through the MPT to the UATs.

The UATs can supply power to the non-Class 1E load groups of medium voltage M/C power generation (PG) and plant investment protection (PIP) switchgear, and to the three Class 1E divisions (Division I, II, and III) of medium voltage M/C switchgear.

The RAT(s) can supply power to the non-Class 1E load groups of medium voltage M/C PG and PIP switchgear, and to the three Class 1E divisions (Division I, II, and III) of medium voltage M/C switchgear.

Non-Class 1E load groups of medium voltage M/C switchgear are supplied power from a UAT with an alternate power supply from a RAT. In addition, the non-Class 1E medium voltage M/C switchgear can be supplied power from the CTG.

Class 1E medium voltage M/C switchgear are supplied power directly (not through any bus supplying non-Class 1E loads) from at least a UAT or a RAT. Class 1E medium voltage M/C switchgear can also be supplied power from their own dedicated Class 1E DG or from the non-Class 1E CTG.

The UATs are sized to supply their load requirements, during design operating modes, of their respective Class 1E divisions and non-Class 1E load groups. UATs are separated

from the RAT(s). In addition, UATs are provided with their own oil pit, drain, fire deluge system, grounding, and lightning protection system.

The PMG, its output circuit breaker, and UAT power feeders are separated from the RAT(s) power feeders. The PMG, its output circuit breaker, and UAT instrumentation and control circuits, are separated from the RAT(s) instrumentation and control circuits.

The MPT and its switching station instrumentation and control circuits, from the switchyard(s) to the main control room (MCR), are separated from the RAT(s) and its switching station instrumentation and control circuits.

The medium voltage M/C switchgear and low voltage P/C switchgear, with their respective transformers, and the low voltage MCCs are sized to supply their load requirements. M/C and P/C switchgear, with their respective transformers, and MCCs are rated to withstand fault currents for the time required to clear the fault from the power source. The PMG output circuit breaker, and power feeder and load circuit breakers for the M/C and P/C switchgear, and MCCs are sized to supply their load requirements and are rated to interrupt fault currents.

Class 1E equipment is protected from degraded voltage conditions.

EPD System interrupting devices (circuit breakers and fuses) are coordinated so that the circuit interrupter closest to the fault opens before other devices.

Instrumentation and control power for the Class 1E divisional medium voltage M/C switchgear and low voltage P/C switchgear is supplied from the Class 1E DC power system in the same division.

The PMG output circuit breaker is equipped with redundant trip devices which are supplied from separate, non-Class 1E DC power systems.

EPD System cables and bus ducts are sized to supply their load requirements and are rated to withstand fault currents for the time required to clear the fault from its power source.

For the EPD System, Class 1E power is supplied by three independent Class 1E divisions. Independence is maintained between Class 1E divisions, and also between Class 1E divisions and non-Class 1E equipment.

The only non-Class 1E loads connected to the Class 1E EPD System are the Fine Motion Control Rod Drives (FMCRDs) and the associated AC standby lighting system.

There are no automatic connections between Class 1E divisions.

Class 1E medium voltage M/C switchgear and low voltage P/C switchgear and MCCs are identified according to their Class 1E division. Class 1E M/C and P/C switchgear and MCCs are located in Seismic Category I structures, and in their respective divisional areas.

Class 1E EPD System cables and raceways are identified according to their Class 1E division. Class 1E divisional cables are routed in Seismic Category I structures and in their respective divisional raceways.

Harmonic Distortion waveforms do not prevent Class 1E equipment from performing their safety functions.

The EPD System supplies an operating voltage at the terminals of the Class 1E utilization equipment that is within the utilization equipment's voltage tolerance limits.

An electrical grounding system is provided for (1) instrumentation, control, and computer systems, (2) electrical equipment (switchgear, distribution panels, transformers, and motors) and (3) mechanical equipment (fuel and chemical tanks). Lightning protection systems are provided for buildings and for structures and transformers located outside of the buildings. Each grounding system and lightning protection system is separately grounded to the plant grounding grid.

The EPD System has the following alarms, displays and controls in the MCR:

(1) Alarms for degraded voltage on Class 1E medium voltage M/C switchgear.

(2) Parameter displays for PMG output voltage, amperes, watts, vars, and frequency.

(3) Parameter displays for EPD System medium voltage M/C switchgear bus voltages and feeder and load amperes.

(4) Controls for the PMG output circuit breaker, medium voltage M/C switchgear feeder circuit breakers, load circuit breakers from the medium voltage M/C switchgear to their respective low voltage P/C switchgear, and low voltage feeder circuit breakers to the low voltage P/C switchgear.

(5) Status indication for the PMG output circuit breaker and the medium voltage M/C switchgear circuit breakers.

The EDP System has the following displays and controls at the Remote Shutdown System (RSS):

(1) Parameter displays for the bus voltages on the Class 1E Divisions I and II medium voltage M/C switchgear.

(2) Controls and status indication for the UAT, RAT(s), CTG and DG Class 1E feeder circuit breakers to the Division I and II medium voltage M/C switchgear, the load circuit breakers from the Class 1E Division I and II medium voltage M/C switchgear to their respective low voltage P/C switchgear, and the low voltage feeder circuit breakers to the Class 1E Division I and II low voltage P/C switchgear.

Class 1E equipment is classified as Seismic Category I.

Class 1E equipment which is located in areas designated as harsh environment areas is qualified for harsh environments.

Interface Requirements

The portions of the EPD System which are not part of the Certified Design shall meet the following requirements:

The offsite system shall consist of a minimum of two independant offsite transmission circuits from the TN.

Voltage variations of the offsite TN during steady state operation shall not cause voltage variations at the loads of more than plus or minus 10% of the loads nominal ratings.

The normal steady state frequency of the offsite TN shall be within plus or minus 2 hertz of 60 hertz during recoverable periods of system instability.

The offsite transmission circuits from the TN through and including the main step-up power transformers and RAT(s) shall be sized to supply their load requirements, during all design operating modes, of their respective Class 1E divisions and non-Class 1E load groups.

The impedances of the main step-up power transformers and RAT(s) shall be compatible with the interrupting capability of the plant's circuit interrupting devices.

The independence of offsite transmission power, instrumentation, and control circuits shall be compatible with the portion of the offsite transmission power, instrumentation, and control circuits within GE's design scope.

Instrumentation and control system loads shall be compatible with the capacity and capability design requirements of DC systems within GE's design scope.

Inspections, Tests, Analyses and Acceptance Criteria

Table 2.12.1 provides a definition of the inspections, tests, and/or analyses, together with associated acceptance criteria, which will be undertaken for the EPD System.

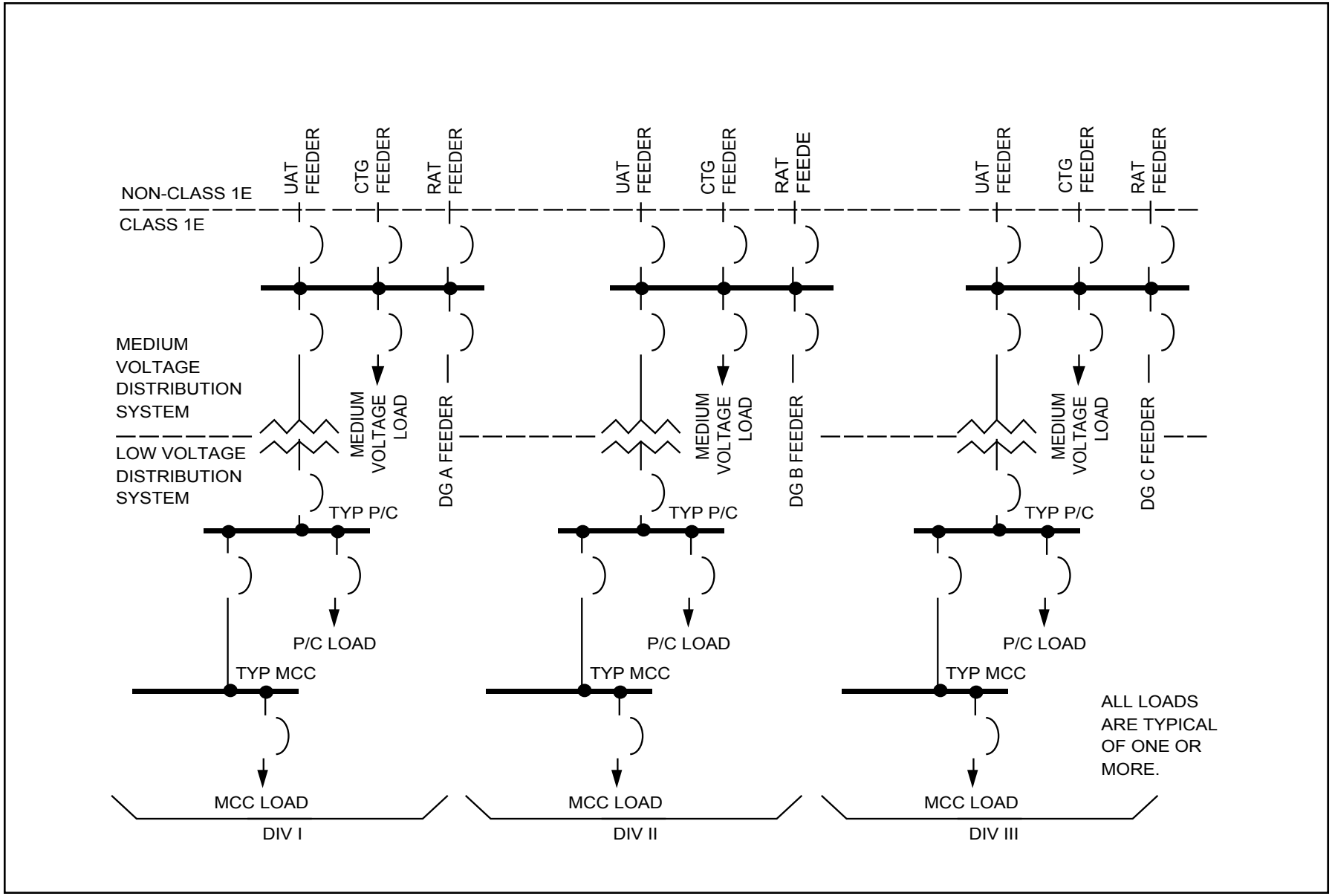

Figure 2.12.1 Class 1E Electrical Power Distribution System

Table 2.12.1 Electric Power Distribution System

Inspections, Tests, Analyses and Acceptance Criteria		
Design Commitment	**Inspections, Tests, Analyses**	**Acceptance Criteria**
1. The basic configuration for the EPD System is described in Section 2.12.1.	1. Inspection of the as-built system will be conducted.	1. The as-built EPD System conforms with the basic configuration described in Section 2.12.1.
2. UATs are sized to supply their load requirements, during design operating modes, of their respective Class 1E divisions and non-Class 1E load groups.	2. Analyses for the as-built UATs to determine their load requirements will be performed.	2. Analyses for as-built UATs exist and conclude that UAT capacity, as determined by its nameplate rating, exceeds its analyzed load requirements, during design operating modes, for its Class 1E division and non-Class 1E load group.
3. UATs are separated from the RAT(s).	3. Inspections of the as-built UATs will be conducted.	3. As-built UATs are separated from the RAT(s) by a minimum of 15.24m.
4. UATs are provided with their own oil pit, drain, fire deluge system, grounding, and lightning protection systems.	4. Inspections of the as-built UATs will be conducted.	4. As-built UATs are provided with their own oil pit, drain, fire deluge system, grounding, and lightning protection systems.
5. The PMG and its output circuit breaker is separated from the RAT(s) power feeders. The PMG and its output circuit breaker instrument and control circuits are separated from the RAT(s) instrumentation and control circuits.	5. Inspections for the as-built PMG, the PMG output circuit breaker, the RAT(s) and their respective instrumentation and control circuits will be conducted.	5. As-built PMG and its output circuit breaker is separated from the RAT(s) power feeders by a minimum of 15.24m, or by walls or floors. The PMG and its output circuit breaker instrument and control circuits are separated from the RAT(s) instrumentation and control circuits by a minimum of 15.24m, or by walls or floors outside the MCR, and are separated by routing the circuits in separate raceways inside the MCR.

Table 2.12.1 Electric Power Distribution System (Continued)

Inspections, Tests, Analyses and Acceptance Criteria		
Design Commitment	**Inspections, Tests, Analyses**	**Acceptance Criteria**
6. UATs power feeders, and instrumentation and control circuits are separated from the RAT(s) output power feeders, and instrumentation and control circuits.	6. Inspections for the as-built UATs and RAT(s) power feeders, and instrumentation and control circuits will be conducted.	6. As-built UAT power feeders are separated from the RAT(s) power feeders by a minimum of 15.24m, or by walls or floors, except at the switchgear, where they are routed to opposite ends of the medium voltage M/C switchgear. As-built UAT instrumentation and control circuits, are separated from the RAT(s) instrumentation and control circuits by a minimum of 15.24m, or by walls or floors, except as follows: a) at the non-Class 1E DC power sources, where they are routed in separate raceways, b) inside the MCR, where they are separated by routing the circuits in separate raceways, and c) at the switchgear, where they are routed to opposite ends of the medium voltage M/C switchgear and routed in separate raceways inside the switchgear.
7. The MPT and its switching station instrumentation and control circuits are separated from the RAT(s) and its switching station instrumentation and control circuits.	7. Inspections for the as-built MPT and RAT(s) and their respective switching station instrumentation and control circuits will be conducted.	7. As-built MPT and its switching station instrumentation and control circuits, from the switchyard(s) to the MCR, are separated from the RAT(s) and its switching station instrumentation and control circuits by a minimum of 15.24m, or by walls or floors. MPT and its switching station instrumentation and control circuits, inside the MCR, are separated from the RAT(s) and its switching station instrumentation and control circuits by routing the circuits in separate raceways.

Table 2.12.1 Electric Power Distribution System (Continued)

Inspections, Tests, Analyses and Acceptance Criteria		
Design Commitment	**Inspections, Tests, Analyses**	**Acceptance Criteria**
8. Medium voltage M/C switchgear, low voltage P/C switchgear, with their respective transformers, and MCCs, and their respective switchgear and MCC feeder and load circuit breakers are sized to supply their load requirements.	8. Analyses for the as-built EPD System to determine load requirements will be performed.	8. Analyses for the as-built EPD System exist and conclude that the capacities of the Class 1E switchgear, P/C transformers, MCCs, and their respective feeder and load circuit breakers, as determined by their nameplate ratings, exceed their analyzed load requirements.
9.	9.	9.
a. Medium voltage M/C switchgear, low voltage P/C switchgear, with their respective transformers, and MCCs, are rated to withstand fault currents for the time required to clear the fault from its power source.	a. Analyses for the as-built EPD System to determine fault currents will be performed.	a. Analyses for the as-built EPD System exist and conclude that the Class 1E switchgear, with their respective transformers, and MCC, current capacities exceed their analyzed fault currents for the time required, as determined by the circuit interrupting device coordination analyses, to clear the fault from its power source.
b. The PMG output circuit breaker, medium voltage M/C switchgear, low voltage P/C switchgear and MCC feeder and load circuit breakers are rated to interrupt fault currents	b. Analyses for the as-built EPD System to determine fault currents will be performed.	b. Analyses for the as-built EPD System exist and conclude that the analyzed fault currents do not exceed the PMG output circuit breaker, and M/C, P/C switchgear, and MCC feeder and load circuit breakers interrupt capacities, as determined by their nameplating ratings.

Table 2.12.1 Electric Power Distribution System (Continued)

Inspections, Tests, Analyses and Acceptance Criteria		
Design Commitment	**Inspections, Tests, Analyses**	**Acceptance Criteria**
10. Class 1E equipment is protected from degraded voltage conditions.	10. a. Analyses for the as-built EPD System to determine the trip conditions for degraded voltage conditions will be performed. b. Tests for each as-built Class 1E M/C switchgear will be conducted by providing a simulated degraded voltage signal.	10. a. Analyses for the as-built EPD System exist and conclude that the Class 1E preferred offsite power feeder breakers to the Class 1E M/C switchgear will trip before Class 1E loads experience degraded voltage conditions exceeding those voltage conditions for which the Class 1E equipment is qualified. b. As-built Class 1E feeder breakers from preferred offsite power to the Class 1E M/C switchgear trip when a degraded voltage condition exists.
11. EPD System interrupting devices (circuit breakers and fuses) are coordinated so that the circuit interrupter closest to the fault opens before other devices.	11. Analyses for the as-built EPD System to determine circuit interrupting device coordination will be performed.	11. Analyses for the as-built EPD System exist and conclude that the analyzed circuit interrupter closest to the fault will open before other devices.
12. Instrumentation and control power for Class 1E divisional medium voltage M/C switchgear and low voltage P/C switchgear is supplied from the Class 1E DC power system in the same division.	12. Tests of the as-built Class 1E medium and low voltage switchgear will be conducted by providing a test signal in only one Class 1E division at a time.	12. A test signal exists in only the Class 1E division under test.
13. The PMG output circuit breaker is equipped with redundant trip devices which are supplied from separate non-Class 1E DC power systems.	13. Tests of the as-built PMG output circuit breaker will be conducted by providing a test signal in only one trip circuit at a time.	13. A test signal exists in only the circuit under test.

Table 2.12.1 Electric Power Distribution System (Continued)

Inspections, Tests, Analyses and Acceptance Criteria		
Design Commitment	**Inspections, Tests, Analyses**	**Acceptance Criteria**
14. EPD System cables and bus ducts are sized to supply their load requirements.	14. Analyses for the as-built EPD System cables and bus ducts will be performed.	14. Analyses for the as-built EPD System exist and conclude that cable and bus duct capacities, as determined by cable and bus duct ratings, exceed their analyzed load requirements.
15. EPD System cables and bus ducts are rated to withstand fault currents for the time required to clear its fault from its power source.	15. Analyses for the as-built EPD System to determine fault currents will be performed.	15. Analyses for the as-built EPD System exist and conclude that cables and bus ducts will withstand the analyzed fault currents for the time required, as determined by the circuit interrupting device coordination analyses, to clear the analyzed faults from their power sources.
16. For the EPD System, Class 1E power is supplied by three independent Class 1E divisions. Independence is maintained between Class 1E divisions, and between Class 1E divisions and non-Class 1E equipment.	16. a. Tests on the as-built EPD System will be conducted by providing a test signal in only one Class 1E division at a time. a. Inspections of the as-built EPD System Class 1E divisions will be conducted.	16. a. A test signal exists in only the Class 1E division under test in the EPD System. a. In the EPD System, physical separation or electrical isolation exists between Class 1E divisions. Physical separation or electrical isolation exists between these Class 1E divisions and non-Class 1E equipment.
17. Class 1E medium voltage M/C switchgear and low voltage P/C switchgear and MCCs are identified according to their Class 1E division.	17. Inspections of the as-built EPD System Class 1E M/C and P/C switchgear and MCCs will be conducted.	17. As-built Class 1E M/C and P/C switchgear, and MCCs are identified according to their Class 1E division.
18. Class 1E M/C and P/C switchgear and MCCs are located in Seismic Category I structures and in their respective divisional areas.	18. Inspections of the as-built Class 1E M/C and P/C switchgear and MCCs will be conducted.	18. As-built Class 1E M/C and P/C switchgear, and MCCs are located in Seismic Category I structures and in their respective divisional areas.

Table 2.12.1 Electric Power Distribution System (Continued)

Inspections, Tests, Analyses and Acceptance Criteria		
Design Commitment	**Inspections, Tests, Analyses**	**Acceptance Criteria**
19. Class 1E EPD System cables and raceways are identified according to their Class 1E division.	19. Inspections of the as-built Class 1E EPD System cables and raceways will be conducted.	19. As-built Class 1E EPD System cables and raceways are identified according to their Class 1E division.
20. Class 1E divisional cables are routed in Seismic Category I structures and in their respective divisional raceways.	20. Inspection of the as-built Class 1E EPD System divisional cables and raceways will be conducted.	20. As-built Class 1E divisional cables are routed in Seismic Category I structures and in their respective divisional raceways.
21. Harmonic Distortion waveforms do not prevent Class 1E equipment from performing their safety functions.	21. Analyses for the as-built EPD System to determine harmonic distortions will be performed.	21. Analyses for the as-built EPD System exist and conclude that harmonic distortion waveforms do not exceed 5% voltage distortion on the Class 1E EPD System.
22. The EPD System supplies an operating voltage at the terminals of the Class 1E utilization equipment that is within the utilization equipment's voltage tolerance limits.	22. a. Analyses for the as-built EPD System to determine voltage drops will be performed. b. Tests of the as-built Class 1E EPD System will be conducted by operating connected Class 1E loads at their analyzed minimum voltage.	22. a. Analyses for the as-built EPD System exist and conclude that the analyzed operating voltage supplied at the terminals of the Class 1E utilization equipment is within the utilization equipment's voltage tolerance limits, as determined by their nameplate ratings. b. Connected Class 1E loads operate at their analyzed minmum voltage, as determined by the voltage drop analyses.

Table 2.12.1 Electric Power Distribution System (Continued)

Inspections, Tests, Analyses and Acceptance Criteria		
Design Commitment	**Inspections, Tests, Analyses**	**Acceptance Criteria**
23. An electrical grounding system is provided for (1) instrumentation, control, and computer systems, (2) electrical equipment (switchgear, distribution panels, transformers, and motors) and (3) mechanical equipment (fuel and chemical tanks). Lightning protection systems are provided for buildings and for structures and transformers located outside of the buildings. Each grounding system and lightning protection system is separately grounded to the plant grounding grid.	23. Inspections of the as-built EPD System plant Grounding and Lightning Protection Systems will be conducted.	23. The as-built EDP System instrumentation, control, and computer grounding system, electrical equipment and mechanical equipment grounding system, and lightning protection systems provided for buildings and for structures and transformers located outside of the buildings are separately grounded to the plant grounding grid.
24. MCR alarms, displays and controls provided for the EPD System are as defined in Section 2.12.1.	24. Inspections will be conducted on the MCR alarms, displays and controls for the EPD System.	24. Displays and controls exist or can be retrieved in the MCR as defined in Section 2.12.1.
25. RSS displays and controls provided for the EPD System are as defined in Section 2.12.1.	25. Inspections will be conducted on the as-built RSS displays and controls for the EPD System.	25. Displays and controls exist or can be retrieved on the RSS as defined in Section 2.12.1.

2.12.2 Unit Auxiliary Transformer

No entry. Covered in Section 2.12.1.

2.12.3 Isolated Phase Bus

No entry. Covered in Section 2.12.1.

2.12.4 Nonsegregated Phase Bus

No entry. Covered in Section 2.12.1.

2.12.5 Metal Clad Switchgear

No entry. Covered in Section 2.12.1.

2.12.6 Power Center

No entry. Covered in Section 2.12.1.

2.12.7 Motor Control Center

No entry. Covered in Section 2.12.1.

2.12.8 Raceway System

No entry. Covered in Section 2.12.1.

2.12.9 Grounding Wire

No entry. Covered in Section 2.12.1.

2.12.10 Electrical Wiring Penetration

Design Description

Electrical penetrations are provided for electrical cables passing through the primary containment.

Electrical penetrations are classified as safety-related.

Electrical penetrations are protected against currents that are greater than their continuous current rating.

Electrical penetrations are classified as Seismic Category I.

Divisional electrical penetrations only contain cables of one Class 1E division. Independence is provided between divisional electrical penetrations and also between divisional electrical penetrations and penetrations containing non-Class 1E cables.

Electrical penetrations are qualified for a harsh environment.

Inspections, Tests, Analyses and Acceptance Criteria

Table 2.12.10 provides a definition of the inspections, tests, and/or analyses, together with the associated acceptance criteria, which will be undertaken for the Electrical Wiring Penetrations.

Table 2.12.10 Electrical Wiring Penetration

Inspections, Tests, Analyses and Acceptance Criteria		
Design Commitment	**Inspections, Tests, Analyses**	**Acceptance Criteria**
1. The basic configuration of the Electrical Wiring Penetration is described in Section 2.12.10.	1. Inspections of the as-built Electrical Wiring Penetration will be conducted.	1. The as-built Electrical Wiring Penetration conforms with the basic configuration described in Section 2.12.10.
2. Electrical penetrations are protected against currents that are greater than their continuous current ratings.	2. Analyses for the as-built electrical penetrations and protective features will be performed.	2. Analyses for the as-built electrical penetrations and protective features exist and conclude either 1) that the maximum current of the circuits does not exceed the continuous current rating of the penetration, or 2) that the circuits have redundant protective devices in series and that the redundant protection devices are coordinated with the penetration's rated short circuit thermal capacity data and prevent current from exceeding the continuous current rating of the electrical penetrations.
3. Divisional electrical penetrations only contain cables of one Class 1E division.	3. Inspections of the as-built divisional electrical penetrations will be conducted.	3. As-built divisional electrical penetrations only contain cables of one Class 1E division.
4. Independence is provided between divisional electrical penetrations and between divisional electrical penetrations and penetrations containing non-Class 1E cables.	4. Inspections of the as-built electrical penetrations will be conducted.	4. Physical separation exists between as-built divisional electrical penetrations. Physical separation exists between these divisional electrical penetrations and penetrations containing non-Class 1E cables.

2.12.11 Combustion Turbine Generator

Design Description

The Combustion Turbine Generator (CTG) is a self-contained unit with its own supporting auxiliary systems. The CTG functions as an alternate AC power source.

The CTG is classified as non-safety-related.

The CTG can supply power to the non-Class 1E plant investment protection (PIP) busses or to the Class 1E divisional busses. The CTG capacity to supply power is at least as large as the capacity of an emergency diesel generator (DG). The CTG is located outside the Reactor Building.

The CTG has the following displays and controls in the main control room (MCR):

(1) Parameter displays for the CTG output voltage, amperes, kVA, and frequency.

(2) Controls for manually initiating the CTG.

Inspections, Tests, Analyses and Acceptance Criteria

Table 2.12.11 provides a definition of the inspections, tests, and/or analyses, together with associated acceptance criteria, which will be undertaken for the CTG.

Table 2.12.11 Combustion Turbine Generator

Inspections, Tests, Analyses and Acceptance Criteria		
Design Commitment	**Inspections, Tests, Analyses**	**Acceptance Criteria**
1. The basic configuration of the CTG is described in Section 2.12.11.	1. Inspections of the as-built CTG will be conducted.	1. The as-built CTG conforms with the basic configuration described in Section 2.12.11.
2. The CTG can supply power to the non-Class 1E busses or to the Class 1E divisional busses.	2. Tests on the as-built CTG will be conducted by connecting the CTG to the non-Class 1E PIP busses and to the Class 1E divisional busses.	2. The as-built CTG can supply power to the non-Class 1E PIP busses or to the Class 1E divisional busses.
3. The CTG capacity to supply power is at least as large as the capacity of a DG.	3. Inspections of the as-built CTG and DGs will be conducted.	3. The as-built CTG capacity to supply power is at least as large as the capacity of a DG, as determined by the CTG and DG nameplate ratings.
4. MCR displays and controls provided for the CTG are as defined in Section 2.12.11.	4. Inspections will be conducted on the MCR displays and controls for the CTG.	4. Displays and controls exist or can be retrieved in the MCR as defined in Section 2.12.11.

2.12.12 Direct Current Power Supply

Design Description

The Direct Current Power Supply consists of Class 1E and non-Class 1E batteries, battery chargers, and their respective direct current (DC) distribution panels, motor control centers (MCC), power, and instrumentation and control cables to the distribution system loads. The DC distribution system also includes the protection equipment provided to protect the DC distribution equipment. The Class 1E Direct Current Power Supply and its connections to the Electrical Power Distribution (EPD) System are shown on Figure 2.12.12.

The Class 1E DC electrical power distribution system consists of four Class 1E divisions (Divisions I, II, III, and IV) of batteries with their respective DC electrical distribution panels, DC MCCs, if provided for motor loads, and battery chargers. The Class 1E DC distribution system provides DC power to Class 1E DC equipment and instrumentation and control circuits.

The non-Class 1E DC electrical power distribution system consists of non-Class 1E batteries with their respective DC electrical distribution panels, DC MCC, if provided for motor loads, and battery chargers. The non-Class 1E DC distribution system provides DC power to non-Class 1E DC equipment and instrumentation and control circuits.

Except for Division IV, each Class 1E divisional (Divisions I,II, and III) battery is provided with a normal battery charger supplied alternating current (AC) power from a MCC in the same Class 1E division as the battery. The Division IV normal battery charger is supplied AC power from a Division II MCC. There are no automatic connections between Class 1E divisions. Interlocks are provided to prevent manual paralleling between Class 1E divisions.

Each Class 1E battery is sized to supply its design loads, at the end-of-installed-life, for a minimum of 2 hours without recharging.

Each Class 1E normal battery charger is sized to supply its respective Class 1E division's normal steady-state loads while charging its respective Class 1E battery.

The Class 1E battery, and battery charger circuit breakers, and DC distribution panels, MCCs, and their circuit breakers and fuses are sized to supply their load requirements. The Class 1E battery, battery charger, and DC distribution panels, and MCCs are rated to withstand fault currents for the time required to clear the fault from its power source. Circuit breakers and fuses in Class 1E battery, battery charger, DC distribution panel, and MCC circuits are rated to interrupt fault currents.

Class 1E DC electrical distribution system circuit interrupting devices (circuit breakers and fuses) are coordinated so that the circuit interrupter closest to the fault opens before other devices.

Class 1E DC electrical distribution system cables are sized to supply their load requirements and are rated to withstand fault currents for the time required to clear the fault from its power source.

The Class 1E DC electrical distribution system supplies an operating voltage at the terminals of the Class 1E utilization equipment that is within the utilization equipment's voltage tolerance limits.

Each Class 1E battery is located in a Seismic Category I structure and in its respective divisional battery room.

Class 1E DC distribution panels and MCCs are identified according to their Class 1E division and are located in Seismic Category I structures and in their respective divisional areas.

Class 1E DC distribution system cables and raceways are identified according to their Class 1E division. Class 1E divisional cables are routed in Seismic Category I structures and in their respective divisional raceways.

For the Class 1E DC electrical distribution system, independence is provided between Class 1E divisions, and also between Class 1E divisions and non-Class 1E equipment.

The only non-Class 1E load connected to the Class 1E DC electrical power distribution system is the associated DC emergency lighting system.

The Class 1E DC power supply has the following alarms and displays in the main control room (MCR):

(1) Alarms for battery ground detection.

(2) Parameter Displays for battery voltage and amperes.

(3) Status indication for battery circuit breaker/disconnect position.

Class 1E equipment is classified as Seismic Category I.

Class 1E equipment which is located in areas designated as harsh environment areas is qualified for harsh environments.

Inspections, Tests, Analyses and Acceptance Criteria

Table 2.12.12 provides a definition of the inspections, tests, and/or analyses, together with associated acceptance criteria, which will be undertaken for the Direct Current Power Supply.

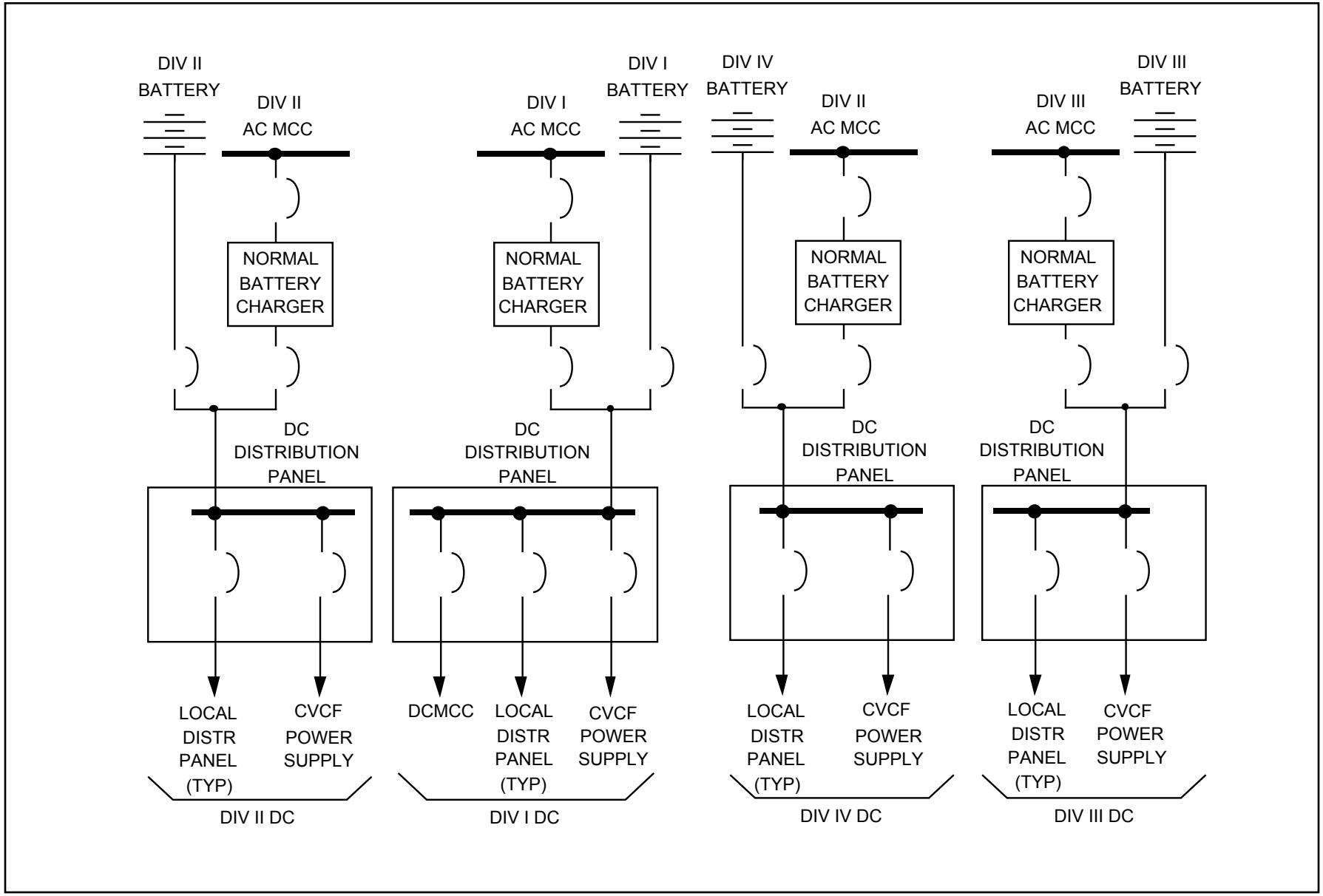

Figure 2.12.12 Direct Current Power Supply (Class 1E)

Table 2.12.12 Direct Current Power Supply

Inspections, Tests, Analyses and Acceptance Criteria		
Design Commitment	**Inspections, Tests, Analyses**	**Acceptance Criteria**
1. The basic configuration of the Direct Current Power Supply is described in Section 2.12.12.	1. Inspections of the as-built system will be conducted.	1. The as-built Direct Current Power Supply conforms with the basic configuration described in Section 2.12.12.
2. Except for Division IV, each Class 1E divisional (Divisions I,II, and III) battery is provided with a normal battery charger supplied AC power from a MCC in the same Class 1E division as the battery. The Division IV normal battery charger is supplied AC power from a Division II MCC.	2. Inspections of the as-built Class 1E Direct Current Power Supply will be conducted.	2. Each as-built Class 1E divisional (Divisions I,II, and III) battery is provided with a normal battery charger supplied AC power from a MCC in the same Class 1E division as the battery. The Division IV normal battery charger is supplied AC power from a Division II MCC.
3. Interlocks are provided to prevent manual paralleling between Class 1E divisions.	3. Tests of the as-built Class 1E interlocks will be conducted by attempting to close each interlocked pair of breakers.	3. The as-built Class 1E interlocks prevent paralleling between Class 1E divisions. The connections between Class 1E divisions are manual only.
4. Each Class 1E battery is sized to supply its design loads, at the end-of-installed-life, for a minimum of 2 hours without recharging.	4. a. Analyses for the as-built Class 1E batteries to determine battery capacities will be performed based on the design duty cycle for each battery. b. Tests of each as-built class 1E battery will be conducted by simulating loads which envelope the analyzed battery design duty cycle.	4. a. Analyses for the as-built Class 1E batteries exist and conclude that each Class 1E battery has the capacity, as determined by the as-built battery rating, to supply its analyzed design loads, at the end-of-installed-life, for a minimum of 2 hours without recharging. b. The capacity of each as-built Class 1E battery equals or exceeds the analyzed battery design duty cycle capacity.

Table 2.12.12 Direct Current Power Supply (Continued)

Inspections, Tests, Analyses and Acceptance Criteria		
Design Commitment	**Inspections, Tests, Analyses**	**Acceptance Criteria**
5. Each Class 1E normal battery charger is sized to supply its respective Class 1E division's normal steady state loads while charging its respective Class 1E battery.	5. Tests of each as-built Class 1E normal battery charger will be conducted by supplying its respective Class 1E division's normal steady state loads while charging its respective Class 1E battery.	5. Each as-built Class 1E normal battery charger can supply its respective Class 1E division's normal steady state loads while charging its respective Class 1E battery.
6. The Class 1E DC battery and battery charger circuit breakers, and DC distribution panels, MCCs, and their circuit breakers and fuses, are sized to supply their load requirements.	6. Analyses for the as-built Class 1E DC electrical distribution system to determine the capacities of the battery and battery charger circuit breakers and DC distribution panels, MCCs, and their circuit breakers and fuses, will be performed.	6. Analyses for the as-built Class 1E DC electrical distribution system exist and conclude that the capacities of Class 1E battery and battery charger circuit breakers, and DC distribution panels, MCCs, and their circuit breakers and fuses, as determined by their nameplate ratings, exceed their analyzed load requirements.

Table 2.12.12 Direct Current Power Supply (Continued)

Inspections, Tests, Analyses and Acceptance Criteria		
Design Commitment	**Inspections, Tests, Analyses**	**Acceptance Criteria**
7.	7.	7.
a. The Class 1E battery, battery chargers, and DC distribution panels, and MCCs are rated to withstand fault currents for the time required to clear the fault from its power source.	a. Analyses for the as-built Class 1E DC electrical distribution system to determine fault currents will be performed.	a. Analyses for the as-built Class 1E DC electrical distribution system exist and conclude that the capacities of as-built Class 1E battery, battery charger, DC distribution panel, and MCC current capacities exceed their analyzed fault currents for the time required, as determined by the circuit interrupting device coordination analyses, to clear the fault from its power source.
b. Circuit breakers and fuses in Class 1E battery, battery charger, DC distribution panel, and MCC circuits are rated to interrupt fault currents.	b. Analyses for the as-built Class 1E DC electrical distribution system to determine fault currents will be performed.	b. Analyses fro the as-built Class 1E DC electrical distribution system exist and conclude that the analyzed fault currents do not exceed the interrupt capacity of circuit breakers and fuses in the battery, battery charger, DC distribution panel, and MCC circuit, as determined by their nameplate ratings.
8. Class 1E DC electrical distribution system circuit interrupting devices (circuit breakers and fuses) are coordinated so that the circuit interrupter closest to the fault opens before other devices.	8. Analyses for the as-built Class 1E DC electrical distribution system to determine circuit interrupting device coordination will be performed.	8. Analyses for the as-built Class 1E DC electrical distribution system circuit interrupting devices exist and conclude that the analyzed circuit interrupter closest to the fault will open before other devices.

Table 2.12.12 Direct Current Power Supply (Continued)

Inspections, Tests, Analyses and Acceptance Criteria		
Design Commitment	**Inspections, Tests, Analyses**	**Acceptance Criteria**
9. Class 1E DC electrical distribution system cables are sized to supply their load requirements.	9. Analyses for the as-built Class 1E DC electrical distribution system cables to determine their load requirements will be performed.	9. Analyses for the as-built Class 1E DC electrical distribution system cables exist and conclude that the Class 1E DC electrical distribution system cable capacities, as determined by cable ratings, exceed their analyzed load requirements.
10. Class 1E DC electrical distribution system cables are rated to withstand fault currents for the time required to clear the fault from its power source.	10. Analyses for the as-built Class 1E DC electrical distribution system to determine fault currents will be performed.	10. Analyses for the as-built Class 1E DC electrical distribution system exist and conclude that the Class 1E DC electrical distribution system cables will withstand the analyzed fault currents for the time required, as determined by the circuit interrupting device coordination analyses, to clear the fault from its power source.

Table 2.12.12 Direct Current Power Supply (Continued)

Inspections, Tests, Analyses and Acceptance Criteria		
Design Commitment	**Inspections, Tests, Analyses**	**Acceptance Criteria**
11. The Class 1E DC electrical distribution system supplies an operating voltage at the terminals of the Class 1E utilization equipment that is within the utilization equipment's voltage tolerance limits.	11. a. Analyses for the as-built Class 1E DC electrical distribution system to determine system voltage drops will be performed. b. Tests of the as-built Class 1E DC system will be conducted by operating connected Class 1E loads at less than or equal to the minimum allowable battery voltage and at greater than or equal to the maximum battery charging voltage.	11. a. Analyses for the as-built Class 1E DC electrical distribution system exist and conclude that the analyzed operating voltage supplied at the terminals of the Class 1E utilization equipment is within the utilization equipment's voltage tolerance limits, as determined by their nameplate ratings. b. Connected as-built Class 1E loads operate at less than or equal to the minimum allowable battery voltage and at greater than or equal to the maximum battery charging voltage.
12. Each Class 1E battery is located in a Seismic Category I structure and in its respective divisional battery room.	12. Inspections of the as-built Class 1E batteries will be conducted.	12. Each as-built Class 1E battery is located in a Seismic Category I structure and in its respective divisional battery room.
13. Class 1E DC distribution panels, and MCCs are identified according to their Class 1E division and are located in Seismic Category I structures and in their respective divisional areas.	13. Inspections of the as-built Class 1E DC distribution panels and MCCs will be conducted.	13. As-built DC distribution panels and MCCs are identified according to their Class 1E division and are located in Seismic Category I structures and in their respective divisional areas.

Table 2.12.12 Direct Current Power Supply (Continued)

Inspections, Tests, Analyses and Acceptance Criteria		
Design Commitment	**Inspections, Tests, Analyses**	**Acceptance Criteria**
14. Class 1E DC distribution system cables and raceways are identified according to their Class 1E division. Class 1E divisional cables are routed in Seismic Category I structures and in their respective divisional raceways.	14. Inspections of the as-built Class 1E DC distribution system cables and raceways will be conducted.	14. As-built Class 1E DC distribution system cables and raceways are identified according to their Class 1E division. Class 1E divisional cables are routed in Seismic Category I structures and in their respective divisional raceways.
15. For the Class 1E DC electrical distribution system, independence is provided between Class 1E divisions, and between Class 1E divisions and non-Class 1E equipment.	15. a. Tests will be conducted on the as-built DC electrical distribution system by providing a test signal in only one Class 1E division at a time. b. Inspections of the as-built DC electrical distribution system will be conducted.	15. a. A test signal exists in only the Class 1E division under test in the DC electrical distribution system. b. In the as-built DC electrical distribution system, physical separation or electrical isolation exists between Class 1E divisions. Physical separation or electrical isolation exists between these Class 1E divisions and non-Class 1E equipment.
16. MCR alarms and displays provided for the Direct Current Power Supply are as defined in Section 2.12.12.	16. Inspections will be conducted on the alarms and displays for the Direct Current Power Supply.	16. Alarms and displays exist or can be retrieved in the MCR as defined in Section 2.12.12.

2.12.13 Emergency Diesel Generator System

Design Description

The Emergency Diesel Generator (DG) System consists of three diesel engines and their respective combustion air intake system, starting air system, fuel oil system (from the day tank to the engine), lubricating oil system, engine jacket cooling water system, engine exhaust system and silencer, governor system, and generator with its excitation and voltage regulation systems.

The three DGs are classified as Class 1E, safety-related and supply standby AC power to their respective Class 1E Electrical Power Distribution (EPD) System divisions (Divisions I, II, and III). The DG connections to the EPD System are shown on Figure 2.12.1.

The DGs are sized to supply their load demand following a loss-of-coolant accident (LOCA). The DG air start receiver tanks are sized to provide five DG starts without recharging their tanks.

A loss of preferred power (LOPP) signal (bus under-voltage) from an EPD System medium voltage divisional bus automatically starts its respective DG, and initiates automatic load shedding and connection of the DG to its divisional bus. A DG automatically connects to its respective bus when DG required voltage and frequency conditions are established and required motor loads are tripped. After a DG connects to its respective bus, the non-accident loads are automatically sequenced onto the bus.

LOCA signals from the Residual Heat Removal (RHR) (Division I) and High Pressure Core Flooder (HPCF) (Divisions II and III) systems automatically start their respective divisional DG. After starting, the DGs remain in a standby mode (i.e. running at required voltage and frequency, but not connected to their busses), unless a LOPP signal exists. When LOCA and LOPP signals exist, load shedding occurs and required motor loads are tripped, the DG automatically connects to its respective divisional bus. After a DG connects to its respective bus, the LOCA loads are automatically sequenced onto the bus.

A manual start signal from the main control room (MCR) or from the local control station in the DG area starts a DG. After starting, the DG remains in a standby mode, unless a LOPP signal exists.

DGs start, attain required voltage and frequency, and are ready to load in ≤ 20 seconds after receiving an automatic or manual start signal.

When a DG is operating in parallel (test mode) with offsite power, a loss of the offsite power source used for testing or a LOCA signal overrides the test mode by disconnecting the DG from its respective divisional bus.

The DG units are classified Seismic Category I and DG auxiliary systems are classified Seismic Category I, ASME Code Class 3, and Class 1E, and are located in their respective divisional areas in the Reactor Building. The DG combustion air intakes are located above the maximum flood level. The DG combustion air intakes are separated from DG exhaust ducts. Class 1E DG unit auxiliary systems are supplied electrical power from the same Class 1E division as the DG unit. Independence is provided between Class 1E divisions and also between Class 1E divisions and non-Class 1E equipment. Each divisional DG (Divisions I, II, and III) with its auxiliary systems is physically separated from the other divisions.

The DG System has the following displays and controls in the MCR.

(1) Parameter displays for the DG output voltage, amperes, watts, vars, frequency, and engine speed.

(2) Controls for manually starting and stopping the DG units.

The DG System has displays at the Remote Shutdown System (RSS) for DG run and stop indication.

Inspections, Tests, Analyses and Acceptance Criteria

Table 2.12.13 provides a definition of the inspections, tests, and/or analyses, together with associated acceptance criteria, which will be undertaken for the Emergency Diesel Generator System.

Table 2.12.13 Emergency Diesel Generator System

Inspections, Tests, Analyses and Acceptance Criteria		
Design Commitment	**Inspections, Tests, Analyses**	**Acceptance Criteria**
1. The basic configuration of the DG System is described in Section 2.12.13.	1. Inspection of the as-built system will be conducted.	1. The as-built DG System conforms with the basic configuration described in Section 2.12.13.
2. The DGs are sized to supply their load demand following a LOCA.	2. Analyses to determine DG load demand, based on the as-built DG load profile, will be performed.	2. Analyses for the as-built DG systems exist and conclude that the DG System capacities exceed, as determined by their nameplate ratings, their load demand following a LOCA.
3. DG air start receiver tanks have capacity for five DG starts without recharging their tanks.	3. Tests on the as-built DG Systems will be conducted by starting the DGs five times.	3. As-built DGs start five times without recharging their air start receiver tanks.
4. A LOPP signal (bus under-voltage) from an EPD System medium voltage divisional bus automatically starts its respective DG, and initiates automatic load shedding and connection of the DG to its divisional bus. A DG automatically connects to its respective bus when DG required voltage and frequency conditions are established and required motor loads are tripped. After a DG connects to its respective bus, the non-accident loads are automatically sequenced onto the bus.	4. Tests on the as-built DG Systems will be conducted by providing a simulated LOPP signal.	4. As-built DGs automatically start on receiving a LOPP signal and attain a voltage and frequency in ≤ 20 seconds which assures an operating voltage and frequency at the terminals of the Class1E utilization equipment that is within the tolerance limits of the utilization equipment, automatically connect to their respective divisional bus, after required motor loads are tripped, and sequence their non-accident loads onto the bus.

Table 2.12.13 Emergency Diesel Generator System (Continued)

Inspections, Tests, Analyses and Acceptance Criteria		
Design Commitment	**Inspections, Tests, Analyses**	**Acceptance Criteria**
5. LOCA signals from the RHR (Division I) and HPCF (Divisions II and III) System automatically start their respective divisional DG. After starting, the DGs remain in a standby mode (i.e. running at required voltage and frequency, but not connected to their busses), unless a LOPP signal exists.	5. Tests on the as-built DG Systems will be conducted by providing a simulated LOCA signal, without a LOPP signal.	5. As-built DGs automatically start on receiving a LOCA signal and attain a voltage and frequency in ≤ 20 seconds which assures an operating voltage and frequency at the terminals of the Class 1E utilization equipment that is within the tolerance limits of the utilization equipment, and remain in the standby mode.
6. When LOCA and LOPP signals exist, load shedding occurs, and required motor loads are tripped, the DG automatically connects to its respective divisional bus. After a DG connects to its respective bus, the LOCA loads are automatically sequenced onto the bus.	6. Tests on the as-built DG Systems will be conducted by providing simulated LOCA and LOPP signals.	6. In the as-built DG Systems, when LOCA and LOPP signals exist, the DG automatically connects to its respective divisional bus. The automatic load sequence begins at ≤ 20 seconds. Following application of each load, the bus voltage does not drop more than 25% measured at the bus. Frequency is restored to within 2% of nominal, and voltage is restored to within 10% of nominal within 60% of each load sequence time interval. The HPCF and RHR pump motor loads are sequenced on to the bus in ≤ 36 seconds for design basis events.

Table 2.12.13 Emergency Diesel Generator System (Continued)

Inspections, Tests, Analyses and Acceptance Criteria		
Design Commitment	**Inspections, Tests, Analyses**	**Acceptance Criteria**
7. A manual start signal from the MCR or from the local control station in the DG area starts a DG. After starting, the DG remains in a standby mode (i.e. running at required voltage and frequency, but not connected to its bus), unless a LOPP signal exists.	7. Tests on the as-built DG Systems will be conducted by providing a manual start signal from the MCR and from the local control station, without a LOPP signal.	7. As-built DGs automatically start on receiving a manual start signal from the MCR or from the local control station and attain a voltage and frequency in ≤ 20 seconds which assures an operating voltage and frequency at the terminals of the Class 1E utilization equipment that is within the tolerance limits of the utilization equipment and remain in the standby mode.
8. When a DG is operating in parallel (test mode) with offsite power, a loss of the offsite power source used for testing or a LOCA signal overrides the test mode by disconnecting the DG from its respective divisional bus.	8. Tests on the as-built DG Systems will be conducted by providing simulated loss of offsite power and LOCA signals while operating the DGs in the test mode.	8. When the as-built DG Systems are operating in the test mode with offsite power and a loss of offsite power or a LOCA signal is received, DGs automatically disconnect from their respective divisional buses.
9. In the DG system, Class 1E DG unit auxiliary systems are supplied electrical power from the same Class 1E division as the DG unit. Independence is provided between Class 1E divisions and between Class 1E divisions and non-Class 1E equipment.	9. a. Tests will be conducted in the as-built DG Systems by providing a test signal in only one Class 1E division at a time. b. Inspections of the as-built Class 1E divisions in the DG systems will be conducted.	9. a. The test signal exists in only the Class 1E division under test in the DG System. b. In the DG systems, physical separation or electrical isolation exists between Class 1E divisions. Physical separation or electrical isolation exists between these Class 1E divisions and non-Class 1E equipment.
10. Each divisional DG (Divisions I, II, and III) with its auxiliary systems is physically separated from the other divisions.	10. Inspections of the as-built DG Systems will be conducted.	10. Each DG with its auxiliary systems is physically separated from the other divisions by structural and/or fire barriers.

Table 2.12.13 Emergency Diesel Generator System (Continued)

Inspections, Tests, Analyses and Acceptance Criteria		
Design Commitment	**Inspections, Tests, Analyses**	**Acceptance Criteria**
11. MCR displays and controls provided for the DG System are as defined in Section 2.12.13	11. Inspections will be conducted on the MCR displays and controls for the as-built DG Systems.	11. Displays and controls exist or can be retrieved in the MCR as defined in Section 2.12.13.
12. RSS displays provided for the DG System are as defined in Section 2.12.13	12. Inspections will be conducted on the RSS displays for the as-built DG Systems.	12. Displays exist or can be retrieved on the RSS as defined in Section 2.12.13.

2.12.14 Vital AC Power Supply

Design Description

The Vital AC Power Supply consists of Class 1E and non-Class 1E uninterruptible power supplies, and their respective alternating current (AC) distribution panels, power, and instrumentation and control cables to the distribution system loads. The AC distribution system also includes the protection equipment provided to protect the AC distribution equipment. The Class 1E Vital AC Power Supply connections to the Electrical Power Distribution (EPD) System and the Direct Current Power Supply are shown on Figure 2.12.14.

The Class 1E Vital AC Power Supply consists of four divisions (Division I, II, III, and IV) of uninterruptible power supplies with their respective distribution panels. Each Class 1E power supply provides uninterruptible, regulated AC power to Class 1E circuits which require continuity of power during a loss of preferred power (LOPP). Each Class 1E Vital AC Power Supply is a constant voltage constant frequency (CVCF) inverter power supply unit.

The non-Class 1E Vital AC Power Supply consists of uninterruptible power supplies with their respective distribution panels. Each non-Class 1E power supply provides uninterruptible, regulated AC power to non-Class 1E circuits which require continuity of power during a LOPP. Each non-Class 1E Vital AC Power Supply is a CVCF inverter power supply unit.

Each Class 1E CVCF unit has three input power sources. Except for the Division IV CVCF unit, the normal power to each Class 1E CVCF unit is supplied from an AC motor control center (MCC) in the same Class 1E division as the CVCF unit. The Division IV Class 1E CVCF unit is supplied AC power from a Division II AC MCC. The backup power for each Class 1E CVCF unit is supplied from the direct current (DC) battery in the same Class 1E division as the CVCF unit. In addition, each Class 1E CVCF unit contains an alternate power supply. The alternate power supply is supplied power from the same AC power source as the normal power supply.

Each Class 1E CVCF normal and backup power supply is synchronized, in both frequency and phase, with its alternate power supply and maintains continuity of power during transfer from the inverter to the alternate supply. Automatic transfer between each Class 1E CVCF unit's three power sources is provided. Manual transfer between each Class 1E CVCF unit power source is also provided.

Each Class 1E CVCF unit is sized to provide output power to its respective distribution panel loads. There are no automatic connections between Class 1E divisions.

Class 1E CVCF units and their respective distribution panels are identified according to their Class 1E division and are located in Seismic Category I structures and in their respective divisional areas. Independence is provided between Class 1E divisions, and also between Class 1E divisions and non-Class 1E equipment.

Class 1E Vital AC Power Supply system distribution panels and their circuit breakers and fuses are sized to supply their load requirements. Distribution panels are rated to withstand fault currents for the time required to clear the fault from its power source. Circuit breakers and fuses are rated to interrupt fault currents.

Class 1E Vital AC Power Supply system interrupting devices (circuit breakers and fuses) are coordinated so that the circuit interrupter closest to the fault opens before other devices.

Class 1E Vital AC Power Supply system cables are sized to supply their load requirements and are rated to withstand fault currents for the time required to clear the fault from its power source.

The Class 1E Vital AC Power Supply system supplies an operating voltage at the terminals of the Class 1E utilization equipment that is within the utilization equipment's voltage tolerance limits.

Class 1E Vital AC Power Supply system cables and raceways are identified according to their Class 1E division. Class 1E divisional cables are routed in Seismic Category I structures and in their respective divisional raceways.

The Class 1E Vital AC Power Supply has alarms for high and low CVCF unit output voltage and frequency in the main control room (MCR).

Class 1E equipment is classified as Seismic Category I.

Class 1E equipment which is located in areas designated as harsh environment areas is qualified for harsh environments.

Inspections, Tests, Analyses and Acceptance Criteria

Table 2.12.14 provides a definition of the inspections, tests, and/or analyses, together with associated acceptance criteria, which will be undertaken for the Vital AC Power Supply.

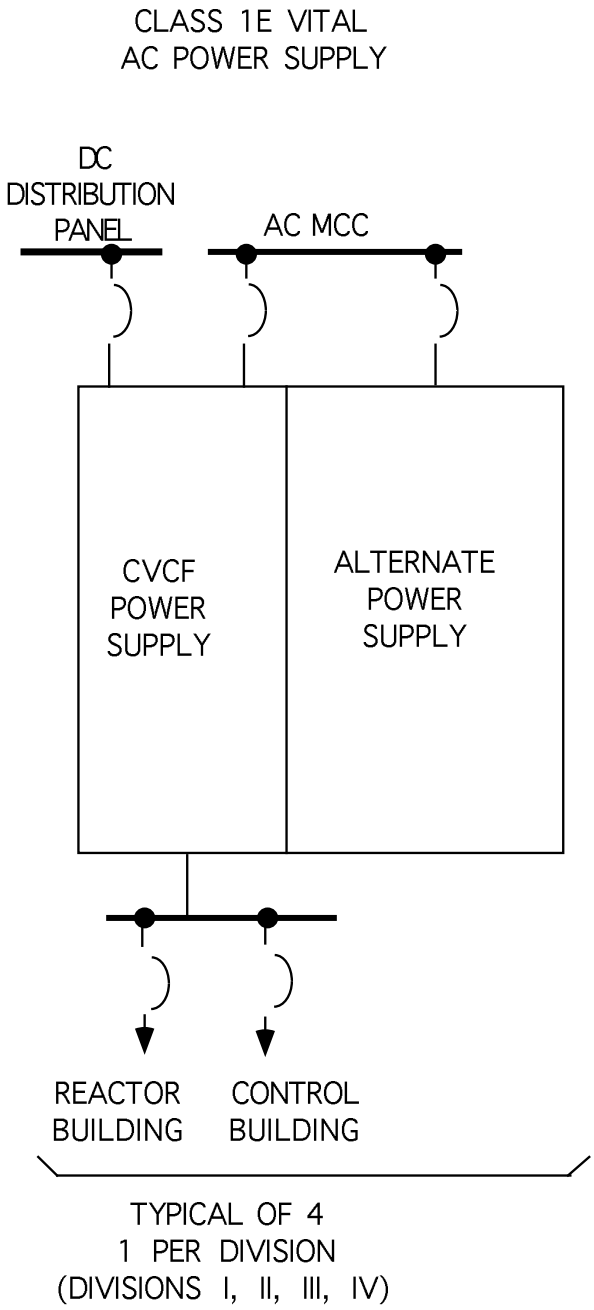

NOTES:
1. THE DIVISION IV CLASS 1E CVCF UNIT IS SUPPLIED BY AC POWER FROM A DIVISION II AC MCC.

Figure 2.12.14 Vital AC Power Supply

Table 2.12.14 Vital AC Power Supply

Inspections, Tests, Analyses and Acceptance Criteria		
Design Commitment	**Inspections, Tests, Analyses**	**Acceptance Criteria**
1. The basic configuration of the Vital AC Power Supply is described in Section 2.12.14.	1. Inspections of the as-built system will be conducted.	1. The as-built Vital AC Power Supply conforms with the basic configuration described in Section 2.12.14.
2. Each Class 1E CVCF unit has three input power sources. Except for the Division IV CVCF unit, the normal power to each Class 1E CVCF unit is supplied from an AC MCC in the same Class 1E division as the CVCF unit. The Division IV Class 1E CVCF unit is supplied AC power from a Division II AC MCC. The backup power for each Class 1E CVCF unit is supplied from the DC battery in the same Class 1E division as the CVCF unit. In addition, each Class 1E CVCF unit contains an alternate power supply. The alternate power supply is supplied power from the same AC power source as the normal power supply.	2. Inspections of the as-built Class 1E Vital AC Power Supply system will be conducted.	2. Each as-built CVCF unit has three input power sources. Except for the Division IV CVCF unit, the normal power to each CVCF unit is supplied from an AC MCC in the same Class 1E division as the CVCF unit. The Division IV CVCF unit is supplied AC power from a Division II AC MCC. The backup power for each CVCF unit is supplied from the DC battery in the same Class 1E division as the CVCF unit. In addition, each Class 1E CVCF unit contains an alternate power supply. The alternate power supply is supplied power from the same AC power source as the normal power supply.
3. Automatic transfer between each Class 1E CVCF unit's three power sources is provided and maintains continuity of power during transfer from the inverter to the alternate supply. Manual transfer between each Class 1E CVCF unit power source is also provided.	3. Tests on each as-built Class 1E CVCF unit will be conducted by providing a test signal in one power source at a time. A test of the manual transfer will also be conducted.	3. Each as-built Class 1E CVCF unit automatically and manually transfers between the unit's three power sources and maintains continuity of power during transfer from the inverter to the alternate supply.
4. Each Class 1E CVCF unit is sized to provide output power to its respective distribution panel loads.	4. Analyses for each as-built Class 1E CVCF unit to determine the power requirements of its loads will be performed.	4. Analyses for each as-built Class 1E CVCF unit exist and conclude that each CVCF unit's capacity, as determined by its nameplate rating, exceeds its analyzed load requirements.

Table 2.12.14 Vital AC Power Supply (Continued)

Inspections, Tests, Analyses and Acceptance Criteria		
Design Commitment	**Inspections, Tests, Analyses**	**Acceptance Criteria**
5. Class 1E CVCF units and their respective distribution panels are identified according to their Class 1E division and are located in Seismic Category I structures and in their respective divisional areas.	5. Inspections of the as-built Class 1E CVCF units and their respective distribution panels will be conducted.	5. The as-built Class 1E CVCF units and their respective distribution panels are identified according to their Class 1E division and are located in Seismic Category I structures and in their respective divisional areas.
6. In the Vital AC Power Supply, independence is provided between Class 1E divisions, and between Class 1E divisions and non-Class 1E equipment.	6. a. Tests on the Vital AC Power Supply will be conducted by providing a test signal in only one Class 1E division at a time. b. Inspections of the as-built Class 1E divisions in the Vital AC Power Supply will be conducted.	6. a. A test signal exists only in the Class 1E division under test in the Vital AC Power Supply. b. In the Vital AC Power Supply, physical separation or electrical isolation exists between the Class 1E divisions. Physical separation or electrical isolation exists between these Class 1E divisions and non-Class 1E equipment.
7. Class 1E Vital AC Power Supply system distribution panels and their respective circuit breakers and fuses are sized to supply their load requirements.	7. Analyses for the as-built distribution panels and their respective circuit breakers and fuses to determine their load requirements will be performed.	7. Analyses for the as-built Class 1E Vital AC Power Supply system distribution panels and their respective circuit breakers and fuses exist and conclude that the capacities of the distribution panels, circuit breakers, and fuses exceed, as determined by their nameplate ratings, their analyzed load requirements.

Table 2.12.14 Vital AC Power Supply (Continued)

Inspections, Tests, Analyses and Acceptance Criteria		
Design Commitment	**Inspections, Tests, Analyses**	**Acceptance Criteria**
8. Class 1E Vital AC Power Supply system distribution panels are rated to withstand fault currents for the time required to clear the fault from its power source.	8. Analyses for the as-built Class 1E distribution system to determine fault currents will be performed.	8. Analyses for the as-built Class 1E Vital AC Power Supply system distribution panels exist and conclude that the current capacities of the distribution panels, exceed their analyzed fault currents for the time required, as determined by the circuit interrupting device coordination analyses, to clear the fault from its power source.
9. Class 1E Vital AC Power Supply system distribution panel circuit breakers and fuses are rated to interrupt fault currents.	9. Analyses for the as-built Class 1E distribution system to determine fault currents will be performed.	9. Analyses for the as-built Class 1E Vital AC Power Supply distribution system exist and conclude that the analyzed fault currents do not exceed the distribution system circuit breakers and fuses interrupt capabilities, as determined by their nameplate ratings.
10. Class 1E Vital AC Power Supply system interrupting devices (circuit breakers and fuses) are coordinated so that the circuit interrupter closest to the fault opens before other devices.	10. Analyses for the as-built Class 1E distribution system to determine circuit interrupting device coordination will be performed.	10. Analyses for the as-built Class 1E Vital AC Power Supply system circuit interrupting devices (circuit breakers and fuses) coordination exist and conclude that the analyzed circuit interrupter closest to the fault will open before other devices.
11. Class 1E Vital AC Power Supply system cables are sized to supply their load requirements.	11. Analyses for the as-built Class 1E distribution system cables to determine their load requirements will be performed.	11. Analyses for the as-built Class 1E Vital AC Power Supply system cables exist and conclude that the capacities of the distribution system cables exceed, as determined by their cable ratings, their analyzed load requirements.

Table 2.12.14 Vital AC Power Supply (Continued)

Inspections, Tests, Analyses and Acceptance Criteria		
Design Commitment	**Inspections, Tests, Analyses**	**Acceptance Criteria**
12. Class 1E Vital AC Power Supply system cables are rated to withstand fault currents for the time required to clear the fault from its power source.	12. Analyses for the as-built Class 1E distribution system to determine fault currents will be performed.	12. Analyses for the as-built Class 1E Vital AC Power Supply system cables exist and conclude that the distribution system cable current capacities exceed their analyzed fault currents for the time required, as determined by the circuit interrupting device coordination analyses, to clear the fault from its power source.
13. The Class 1E Vital AC Power Supply system supplies an operating voltage at the terminals of the Class 1E utilization equipment that is within the utilization equipment's voltage tolerance limits.	13. Analyses for the as-built Class 1E Vital AC Power Supply system to determine voltage drops will be performed.	13. Analyses for the as-built Class 1E Vital AC Power Supply system exist and conclude that the analyzed operating voltage supplied at the terminals of the Class 1E utilization equipment is within the utilization equipment's voltage tolerance limits, as determined by their nameplate ratings.
14. Class 1E Vital AC Power Supply system cables and raceways are identified according to their Class 1E division. Class 1E divisional cables are routed in Seismic Category I structures and in their respective divisional raceways.	14. Inspections of the as-built Class 1E Vital AC Power Supply system cables and raceways will be conducted.	14. As-built Class 1E Vital AC Power Supply system cables and raceways are identified according to their Class 1E division. Class 1E divisional cables are routed in Seismic Category I structures and in their respective divisional raceways.
15. MCR alarms provided for the Class 1E Vital AC Power Supply are as defined in Section 2.12.14.	15. Inspections will be conducted on the MCR alarms for the as-built Class 1E Vital AC Power Supply.	15. Alarms exist or can be retrieved in the MCR as defined in Section 2.12.14.

2.12.15 Instrument and Control Power Supply

Design Description

The Instrument and Control Power Supply consists of Class 1E and non-Class 1E interruptible power supplies and their respective alternating current (AC) distribution panels, power, and instrumentation and control cables to the distribution system loads. The AC distribution system also includes the protection equipment provided to protect the AC distribution equipment. The Class 1E Instrument and Control Power Supply connections to the Electrical Power Distribution (EPD) System are shown on Figure 2.12.15.

The Class 1E Instrument and Control Power Supply consists of three divisions (Division I, II, and III) of interruptible power supplies with their respective distribution panels. Each Class 1E power supply provides interruptible, regulated AC power to Class 1E circuits which do not require continuity of power during a loss of preferred power (LOPP).

The non-Class 1E Instrument and Control Power Supply consists of an interruptible power supply with its respective distribution panel. The non-Class 1E power supply provides interruptible, regulated AC power to non-Class 1E circuits which do not require continuity of power during a LOPP.

Each Class 1E Instrument and Control Power Supply is a voltage regulating device. The power to each Class 1E Instrument and Control Power Supply voltage regulating device is supplied from an AC MCC in the same Class 1E division as the device.

Each Class 1E Instrument and Control Power Supply is sized to provide output power to its respective distribution panel loads.There are no automatic connections between Class 1E divisions.

Class 1E Instrument and Control Power Supplies and their respective distribution panels are identified according to their Class 1E division and are located in Seismic Category I structures and in their respective divisional areas. Independence is provided between Class 1E divisions, and also between Class 1E divisions and non-Class 1E equipment.

Class 1E Instrument and Control Power Supply system distribution panels and their circuit breakers and fuses are sized to supply their load requirements. Distribution panels are rated to withstand fault currents for the time required to clear the fault from its power source. Circuit breakers and fuses are rated to interrupt fault currents.

Class 1E Instrument and Control Power Supply system interrupting devices (circuit breakers and fuses) are coordinated so that the circuit interrupter closest to the fault opens before other devices.

Class 1E Instrument and Control Power Supply system cables are sized to supply their load requirements and are rated to withstand fault currents for the time required to clear the fault from its power source.

The Class 1E Instrument and Control Power Supply system supplies an operating voltage at the terminals of the Class 1E utilization equipment that is within the utilization equipment's voltage tolerance limits.

Class 1E Instrument and Control Power Supply system cables and raceways are identified according to their Class 1E division. Class 1E divisional cables are routed in Seismic Category I structures and in their respective divisional raceways.

Class 1E equipment is classified as Seismic Category I.

Class 1E equipment which is located in areas designated as harsh environment areas is qualified for harsh environments.

Inspections, Tests, Analyses and Acceptance Criteria

Table 2.12.15 provides a definition of the inspections, tests, and/or analyses, together with associated acceptance criteria, which will be undertaken for the Instrument and Control Power Supply.

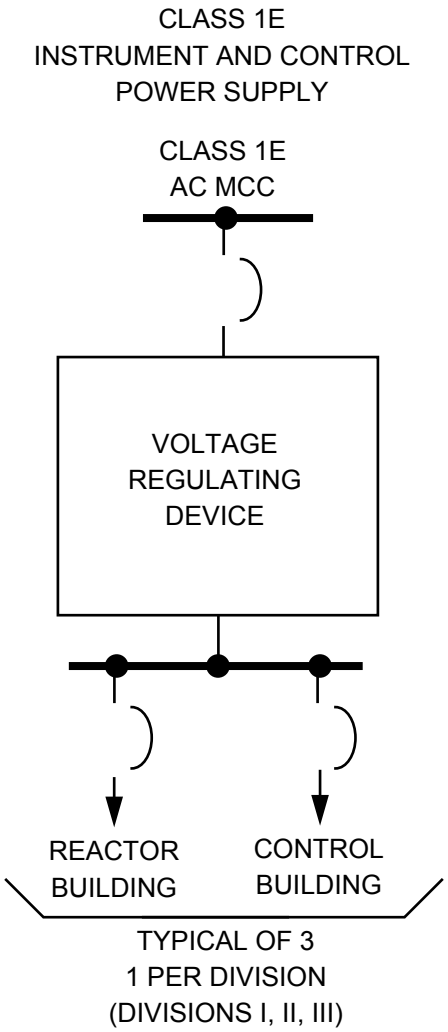

Figure 2.12.15 Instrument and Control Power Supply

Table 2.12.15 Instrument and Control Power Supply

Inspections, Tests, Analyses and Acceptance Criteria		
Design Commitment	**Inspections, Tests, Analyses**	**Acceptance Criteria**
1. The basic configuration of the Instrument and Control Power Supply is described in Section 2.12.15.	1. Inspections of the as-built system will be conducted.	1. The as-built Instrument and Control Power Supply conforms with the basic configuration described in Section 2.12.15.
2. The power to each Class 1E Instrument and Control Power Supply voltage regulating device is supplied from an AC MCC in the same Class 1E division as the device.	2. Inspections of the as-built Class 1E Instrument and Control Power Supply will be conducted.	2. The power to each as-built Class 1E Instrument and Control Power Supply voltage regulating device is supplied from an AC MCC in the same Class 1E division as the device.
3. Each Class 1E AC Instrument and Control Power Supply is sized to provide output power to its respective distribution panel loads.	3. Analyses for each as-built Class 1E Instrument and Control Power Supply to determine the power requirements of its loads will be performed.	3. Analyses for each as-built Class 1E Instrument and Control Power Supply exist and conclude that each Instrument and Control Power Supply capacity, as determined by its nameplate rating, exceeds its analyzed load requirements.
4. Class 1E Instrument and Control Power Supplies and their respective distribution panels are identified according to their Class 1E division and are located in Seismic Category I structures and in their respective divisional areas.	4. Inspections of the as-built Class 1E Instrument and Control Power Supplies and their respective distribution panels will be conducted.	4. The as-built Class 1E Instrument and Control Power Supplies and their respective distribution panels are identified according to their Class 1E division and are located in Seismic Category I structures and in their respective divisional areas.

Table 2.12.15 Instrument and Control Power Supply (Continued)

Inspections, Tests, Analyses and Acceptance Criteria		
Design Commitment	**Inspections, Tests, Analyses**	**Acceptance Criteria**
5. In the Instrumentation and Control Power Supply, independence is provided between Class 1E divisions, and between Class 1E divisions and non-Class 1E equipment.	5. a. Tests on the Instrumentation and Control Power Supply will be conducted by providing a test signal in only one Class 1E division at a time. b. Inspections of the as-built Class 1E divisions in the Instrumentation and Control Power Supply will be conducted.	5. a. A test signal exists only in the Class 1E division under test in the Instrumentation and Control Power Supply. b. In the Instrumentation and Control Power Supply, physical separation or electrical isolation exists between the Class 1E divisions. Physical separation or electrical isolation exists between these Class 1E divisions and non-Class 1E equipment.
6. Class 1E Instrument and Control Power Supply system distribution panels and their respective circuit breakers and fuses are sized to supply their load requirements.	6. Analyses for the as-built distribution panels and their respective circuit breakers and fuses to determine their load requirements will be performed.	6. Analyses for the as-built Class 1E Instrument and Control Power Supply system distribution panels and their respective circuit breakers and fuses exist and conclude that the capacities of the distribution panels, circuit breakers, and fuses exceed, as determined by their nameplate ratings, their analyzed load requirements.
7. Class 1E Instrument and Control Power Supply system distribution panels are rated to withstand fault currents for the time required to clear the fault from its power source.	7. Analyses for the as-built Class 1E distribution system to determine fault currents will be performed.	7. Analyses for the as-built Class 1E Instrument and Control Power Supply system distribution panels exist and conclude that the current capacities of the distribution panels exceed their analyzed fault currents for the time required, as determined by the circuit interrupting device coordination analyses, to clear the fault from its power source.

Table 2.12.15 Instrument and Control Power Supply (Continued)

Inspections, Tests, Analyses and Acceptance Criteria		
Design Commitment	**Inspections, Tests, Analyses**	**Acceptance Criteria**
8. Class 1E Instrument and Control Power Supply system distribution panel circuit breakers and fuses are rated to interrupt fault currents.	8. Analyses for the as-built Class 1E distribution system to determine fault currents will be performed.	8. Analyses for the as-built Class 1E Instrument and Control Power Supply distribution system exist and conclude that the analyzed fault currents do not exceed the distribution system circuit breakers and fuses interrupt capabilities, as determined by their nameplate ratings.
9. Class 1E Instrument and Control Power Supply system interrupting devices (circuit breakers and fuses) are coordinated so that the circuit interrupter closest the fault opens before other devices.	9. Analyses for the as-built Class 1E distribution system to determine circuit interrupting device coordination will be performed.	9. Analyses for the as-built Class 1E Instrument and Control Power Supply system circuit interrupting devices (circuit breakers and fuses) coordination exist and conclude that the analyzed circuit interrupter closest to the fault will open before other devices.
10. Class 1E Instrument and Control Power Supply system cables are sized to supply their load requirements.	10. Analyses for the as-built Class 1E distribution system cables to determine their load requirements will be performed.	10. Analyses for the as-built Class 1E Instrument and Control Power Supply system cables exist and conclude that the capacities of the distribution system cables exceed, as determined by their cable ratings, their analyzed load requirements.
11. Class 1E Instrument and Control Power Supply system cables are rated to withstand fault currents for the time required to clear the fault from its power source.	11. Analyses for the as-built Class 1E distribution system to determine fault currents will be performed.	11. Analyses for the as-built Class 1E Instrument and Control Power Supply system cables exist and conclude that the distribution system cable current capacities exceed their analyzed fault currents for the time required, as determined by the circuit interrupting device coordination analyses, to clear the fault from its power source.

Table 2.12.15 Instrument and Control Power Supply (Continued)

Inspections, Tests, Analyses and Acceptance Criteria		
Design Commitment	**Inspections, Tests, Analyses**	**Acceptance Criteria**
12. The Class 1E Instrument and Control Power Supply system supplies an operating voltage at the terminals of the Class 1E utilization equipment that is within the utilization equipment's voltage tolerance limits.	12. Analyses for the as-built Class 1E Instrument and Control Power Supply system to determine voltage drops will be performed.	12. Analyses for the as-built Class 1E Instrument and Control Power Supply system exist and conclude that the analyzed operating voltage supplied at the terminals of the Class 1E utilization equipment is within the utilization equipment's voltage tolerance limits, as determined by their nameplate ratings.
13. Class 1E Instrument and Control Power Supply system cables and raceways are identified according to their Class 1E division. Class 1E divisional cables are routed in Seismic Category I structures and in their respective divisional raceways.	13. Inspections of the as-built Class 1E Instrument and Control Power Supply system cables and raceways will be conducted.	13. As-built Class 1E Instrument and Control Power Supply system cables and raceways are identified according to their Class 1E division. Class 1E divisional cables are routed in Seismic Category I structures and in their respective divisional raceways.

2.12.16 Communication System

Design Description

The parts of the plant Communication System within the Certified Design consist of a power-actuated paging and broadcasting system and a separate sound-powered telephone system. The parts of the Communication System associated with off-site communications are not within the Certified Design.

The power-actuated paging system provides intraplant station to station communications and area broadcasting in buildings and outside areas. The system consists of at least two channels, with one channel allowing access from the plant telephone system. Each channel is provided with an amplifier and a distribution frame. Handsets and speakers are provided. The power-actuated paging system is powered from plant power supply and is backed by its own battery.

The sound-powered communication system consists of a main communication patch panel, a set of communication stations and a system of cables and jacks. This system provides communication capability between the main control room (MCR), Remote Shutdown System (RSS) panel, electrical equipment area and diesel generator areas. The patch panel is located outside the MCR. The sound-powered communication system does not require any electrical power source for its operation.

The plant Communication System is classified as non-safety related.

Interface Requirements

The parts of the Communication System which are not within the Certified Design shall meet the following requirements:

> An emergency communication system for off-site communication shall be provided.

Inspections, Tests, Analyses and Acceptance Criteria

Table 2.12.16 provides a definition of the inspections, tests, and/or analyses, together with the associated acceptance criteria, which will be undertaken for the Communication System.

Table 2.12.16 Communication System

Inspections, Tests, Analyses and Acceptance Criteria		
Design Commitment	**Inspections, Tests, Analyses**	**Acceptance Criteria**
1. The basic configuration of the plant Communication System is described in Section 2.12.16.	1. Inspections of the as-built plant Communication System will be conducted.	1. The as-built plant Communication System conforms with the basic configuration described in Section 2.12.16.
2. The power actuated paging system provides intraplant, station to station communications and area broadcasting in buildings and outside areas.	2. Tests of the as-built power actuated paging system will be conducted.	2. The power actuated paging system provides intraplant, station to station communications and area broadcasting in buildings and outside areas.
3. The sound-powered communications system provides communication capability between the main control room, remote shutdown panel, electrical equipment area and the diesel generator areas.	3. Tests of the as-built sound-powered communications system will be conducted.	3. The sound-powered communications system provides communication capability between the main control room, remote shutdown panel, electrical equipment area and the diesel generator areas.

2.12.17 Lighting and Servicing Power Supply

Design Description

The Lighting and Servicing Power Supply (LSPS) consists of multiple lighting systems and a non-Class 1E service power supply system. The non-Class 1E service power supply system supplies power to non-Class 1E loads which are not required for plant power operation.

There are four lighting systems: the normal alternating current (AC) lighting system, the standby AC lighting system, the emergency direct current (DC) lighting system, and the guide lamp lighting system.

The normal AC lighting system provides lighting needed for operation, inspection, and repairs during normal plant operation in areas containing non-safety related equipment. The normal lighting system is part of the plant's non-safety-related systems and is supplied by the non-Class 1E power system buses.

The AC standby lighting system is comprised of the non-Class 1E AC standby lighting system and the associated AC standby lighting system. The non-Class 1E AC standby lighting system serves both safety-related and non-safety-related areas and their passageways and stairwells and is powered by the plant investment protection (PIP) busses. The associated AC standby lighting system serves the safety-related divisional areas and the passageways and stairwells leading to the divisional areas.

Each division of associated AC standby lighting is supplied power from its respective Class 1E division (Division I, II, and III). The associated AC standby lighting in the main control room (MCR) is supplied from divisions II and III. The associated AC standby lighting in the division IV battery room and other division IV instrumentation and control areas is supplied from division II.

The DC emergency lighting system is comprised of the non-Class 1E DC emergency lighting system and the associated DC emergency lighting system. The DC emergency lighting system provides DC backup lighting, when AC lighting is lost, until the normal or standby lighting systems are energized. The non-Class 1E DC emergency lighting system supplies the lighting needed in plant areas containing non-safety-related equipment and is supplied by the non-Class 1E DC system. The associated DC emergency lighting system supplies the lighting needed in plant areas containing safety-related equipment.

Each division of associated DC emergency lighting is supplied by power from its respective Class 1E division (Divisions I, II, III, and IV).The associated DC emergency lighting in the MCR is supplied from divisions II and III.

The guide lamp light system serves stairways, exit routes, and major control areas (MCR and Remote Shutdown System (RSS) areas). Each Class 1E guide lamp unit is a self-contained battery pack unit containing a rechargeable battery with a minimum 8-hour capacity. The Class 1E guide lamp units are supplied AC power from the same power source that supplies the associated AC standby lighting system in the area in which they are located. The non-Class 1E guide lamp units in non-safety-related plant areas are supplied power by the non-Class 1E system.

Lighting circuits, excluding lighting fixtures, that are connected to a Class 1E power source are identified as associated circuits and are treated as Class 1E circuits. In the LSPS, independence is provided between Class 1E divisions, and also between Class 1E divisions and non-Class 1E equipment.

Class 1E or associated lighting distribution system equipment is identified according to its Class 1E division and is located in Seismic Category I structures, and in its respective divisional areas.

Class 1E or associated lighting system cables and raceways are identified according to their Class 1E division. Class 1E or associated lighting system cables are routed in their respective divisional raceways and in Seismic Category I structures. Associated DC emergency lighting system cables are not routed with any other cables and are specifically identified as DC lighting.

Class 1E equipment is classified as Seismic Category I.

Inspections, Tests, Analyses and Acceptance Criteria

Table 2.12.17 provides a definition of the inspections, tests, and/or analyses, together with associated acceptance criteria, which will be undertaken for the Lighting and Servicing Power Supply.

Table 2.12.17 Lighting and Servicing Power Supply

Inspections, Tests, Analyses and Acceptance Criteria		
Design Commitment	**Inspections, Tests, Analyses**	**Acceptance Criteria**
1. The basic configuration of the LSPS is described in Section 2.12.17.	1. Inspections of the as-built system will be conducted.	1. The as-built LSPS conforms with the basic configuration described in Section 2.12.17.
2. Each division of associated AC standby lighting is supplied power from its respective Class 1E division.	2. Tests on the associated AC standby lighting will be conducted by providing a test signal in only one Class 1E division at a time.	2. The as-built associated AC standby lighting is supplied power only from its respective Class 1E division.
3. The associated AC standby lighting in the MCR is supplied from Divisions II and III.	3. Tests on the associated AC standby lighting will be conducted by providing a test signal in only one Class 1E division at a time.	3. The as-built associated AC standby lighting in the MCR is supplied from Divisions II and III.
4. The associated AC standby lighting in the Division IV battery room and other Division IV instrumentation and control areas is supplied from Division II.	4. Tests on the associated AC standby lighting will be conducted by providing a test signal in only one Class 1E division at a time.	4. The as-built associated AC standby lighting in the Division IV battery room and other Division IV instrumentation and control areas is supplied from Division II.
5. Each division of associated DC emergency lighting is supplied power from its respective Class 1E division.	5. Tests on the associated DC emergency lighting will be conducted by providing a test signal in only one Class 1E division at a time.	5. The as-built associated DC emergency lighting is supplied power from its respective Class 1E division.
6. The associated DC emergency lighting in the MCR is supplied from Divisions II and III.	6. Tests on the associated DC emergency lighting will be conducted by providing a test signal in only one Class 1E division at a time.	6. The as-built associated DC emergency lighting in the MCR is supplied from Divisions II and III.

Table 2.12.17 Lighting and Servicing Power Supply (Continued)

Inspections, Tests, Analyses and Acceptance Criteria		
Design Commitment	**Inspections, Tests, Analyses**	**Acceptance Criteria**
7. Each Class 1E guide lamp unit is a self-contained, battery pack unit containing a rechargeable battery with a minimum 8-hour capacity. The Class 1E guide lamp units are supplied AC power from the same power source that supplies the associated AC standby lighting system in the area in which they are located.	7. a. Inspections of the as-built Class 1E guide lamp units will be conducted. b. Tests on the as-built Class 1E guide lamp units will be conducted by providing a test signal in only one Class 1E division at a time.	7. a. The Class 1E guide lamp units are self-contained, battery pack units containing a rechargeable battery with a minimum 8-hour capacity. b. The Class 1E guide lamp units are supplied AC power from the same power source that supplies the associated AC standby lighting system in the area in which it is located. The Class 1E guide lamp units are turned on when the associated AC standby lighting system in the area in which they are located is lost.
8. Lighting circuits, excluding lighting fixtures, that are connected to a Class 1E power source are identified as associated circuits and treated as Class 1E circuits.	8. Inspections of the associated lighting circuits will be conducted.	8. The as-built associated lighting circuits are identified as associated circuits and treated as Class 1E circuits.
9. In the LSPS, independence is provided between Class 1E divisions, and between Class 1E divisions and non-Class 1E equipment.	9. a. Tests on the LSPS will be conducted by providing a test signal in only one Class 1E division at a time. b. Inspections of the as-built Class 1E divisions in the LSPS will be conducted.	9. a. A test signal exists in only the Class 1E division under test in the LSPS. b. In the LSPS, physical separation or electrical isolation exists between Class 1E divisions. Physical separation or electrical isolation exists between these Class 1E divisions and non-Class 1E equipment.

Table 2.12.17 Lighting and Servicing Power Supply (Continued)

Inspections, Tests, Analyses and Acceptance Criteria		
Design Commitment	**Inspections, Tests, Analyses**	**Acceptance Criteria**
10. Class 1E or associated lighting distribution system equipment is identified according to its Class 1E division and is located in Seismic Category I structures, and in its respective divisional areas (except for features in design commitment No. 3, 4 and 6).	10. Inspections of the as-built Class 1E and associated lighting systems will be conducted.	10. The as-built Class 1E and associated lighting distribution system equipment is identified according to its Class 1E division and is located in Seismic Category I structures, and in its respective divisional areas (except for features in design commitment No. 3, 4 and 6).
11. Class 1E or associated lighting system cables and raceways, are identified according to their Class 1E division.	11. Inspections of the as-built Class 1E and associated lighting system cables and raceways will be conducted.	11. The as-built Class 1E and associated lighting system cables and raceways are identified according to their Class 1E division.
12. Class 1E or associated lighting system cables are routed in their respective divisional raceways and in Seismic Category I structures.	12. Inspections of the as-built Class 1E and associated lighting system cables and raceways will be conducted.	12. The as-built Class 1E and associated lighting system cables are routed in their respective divisional raceways and in Seismic Category I structures.
13. Associated DC emergency lighting system cables are not routed with any other cables and are specifically identified as DC lighting.	13. Inspections of the as-built associated DC emergency lighting system cables will be conducted.	13. Associated DC emergency lighting system cables are not routed with any other cables and are specifically identified as DC lighting.

2.13.1 Reserve Auxiliary Transformer

No entry. Covered in Section 2.12.1.

2.14.1 Primary Containment System

Design Description

The Primary Containment System (PCS) encompasses:

(1) A reinforced concrete containment vessel (RCCV) with an internal steel liner. The structure includes various penetrations, equipment hatches and personnel access locks. This structure provides an essentially leaktight barrier against the uncontrolled release of radioactivity to the environment as long as postulated accident conditions require.

(2) Structures inside the primary containment which partition the containment into drywell and wetwell regions, provide equipment support, radiation protection, and components for operation of the ABWR pressure suppression containment.

Figure 2.14.1 shows the basic configuration and scope.

The steel-lined reinforced concrete containment structure supported by a reinforced concrete basemat provides the primary containment pressure barrier of the RCCV and is classified as ASME Code Section III. The reactor pressure vessel (RPV) support pedestal and a diaphragm floor partition the containment volume into drywell and wetwell regions. The RPV support pedestal is a double shell steel structure filled with concrete. The diaphragm floor is a reinforced concrete structure. Other major internal structures within the containment are the reactor shield wall, lower drywell personnel and equipment access tunnels and the drywell equipment and piping support structure (DEPSS). These internal structures are steel fabrications.

Penetrations through the containment pressure boundary include the drywell head closure, equipment hatches to both upper and lower drywell regions, personnel locks into upper and lower drywells, a combined personnel access and equipment hatch into the wetwell, and piping and electrical penetration sleeves. These pressure boundary appurtenances are steel structures classified as ASME Code Section III, Division 1, Class MC. Furthermore, the drywell head closure thickness is equal to or greater than 31.7 mm.

The containment design pressure is 309.9 kPaG. The design temperatures for the drywell and the wetwell are 171°C and 104°C, respectively. The maximum calculated pressures and temperatures for the design basis accident are less than these design conditions. The primary containment pressure boundary including penetrations and isolation valves, has a leak rate equal to or less than 0.5% per day (excluding MSIV leakage) of the containment gas mass at the maximum calculated containment pressure for the design basis accident.

The reinforced concrete diaphragm floor, separating the upper drywell and the wetwell gas spaces, has a steel liner plate on the underside. The design differential pressure of the diaphragm floor between drywell and wetwell is 172.6 kPa in the downward direction.

The RPV pedestal forms the lower drywell region and consists of a cylindrical double shell composite steel structure. It is anchored to the basemat and supports the RPV through a support ring girder. The pedestal also supports the reactor shield wall. The pedestal consists of two concentric steel cylinders joined together radially by vertical steel diaphragms and filled with concrete. The pressure suppression venting paths are an integral part of the pedestal structure, which includes (1) the ducts which interconnect the lower and upper drywell regions, (2) the vertical downcomers from the interconnecting ducts to the horizontal vents, and (3) the horizontal vents that direct steam into the suppression pool. The horizontal vents consist of 30 pipes uniformly spaced around the perimeter of the pedestal in ten stacks of three each. The total horizontal vent area is greater or equal to 11.55 m^2. The distance from the pedestal containing these horizontal vents to the outer suppression pool wall is greater than 7.4m. All HVAC ducts, cabling and piping between the upper and lower drywells are routed through the interconnecting ducts.

Vacuum relief between the drywell volumes and the wetwell gas space is provided by vacuum breaker valves on piping sleeves penetrating the pedestal wall. Eight normally closed swing check valves with a total flow area of at least 1.53 m^2 are provided. Each vacuum breaker has two position indication switches that provide position indication and an alarm in the main control room (MCR). The positon switches have adequate sensitivity to detect the allowable suppression pool (S/P) bypass capability of the containment.

The water volume in the suppression pool including the vents is equal to or greater than 3,580 cubic meters. The safety relief valve (SRV) discharge lines terminate in standard “X” type quenchers. The horizontal center line of the safety relief valve discharge line (SRVDL) quencher arms are located at or below the elevation of the center layer of horizontal vents in the suppression pool. The quenchers are placed in the suppression pool in two radial rings. Eighteen of 10 equally spaced locations in each radial ring have quenchers installed.

Water return paths connect the region within the pedestal to the vertical downcomers and horizontal vent paths. The lower drywell floor is provided with corium protection fill of at least 1.5 meters thickness and a minimum 79 m^2 area clear of obstructions to debris spreading. The corium protection fill contains less than 4% of calcium carbonate material by weight. Sumps imbedded in the concrete are protected by corium shields. Thermally activated flooding valves are also located in this region.

The following PCS components are classified as Seismic Category I; the reinforced concrete containment structure, the drywell head, equipment hatches to both upper and lower drywell regions, personnel locks into upper and lower drywells, the combined personnel access and equipment hatch into the wetwell, the basemat, the reactor pedestal, the reactor shield wall, the DEPSS, and containment piping and electrical penetration sleeves.

The containment internal structures designated Seismic Category I, are designed and constructed to accommodate the dynamic and static load conditions and load combinations associated with the containment design basis accident. The loads to be applied to these structures are associated with:

(1) Live loads, dead loads, temperature effects and building vibration loads from normal plant operation.

(2) Earthquakes loads from safe shutdown earthquake.

(3) Blowdown pressures and temperature from design basis loss-of-coolant accidents.

(4) Hydrodynamic loads and structural vibrations resulting from steam discharges into the suppression pool.

(5) Reaction forces on structures resulting from pipe break jets or fluid impacts.

Inspections, Tests, Analyses and Acceptance Criteria

Table 2.14.1 provides a definition of the inspections, tests, and/or analyses, together with associated acceptance criteria, which will be undertaken for the Primary Containment System.

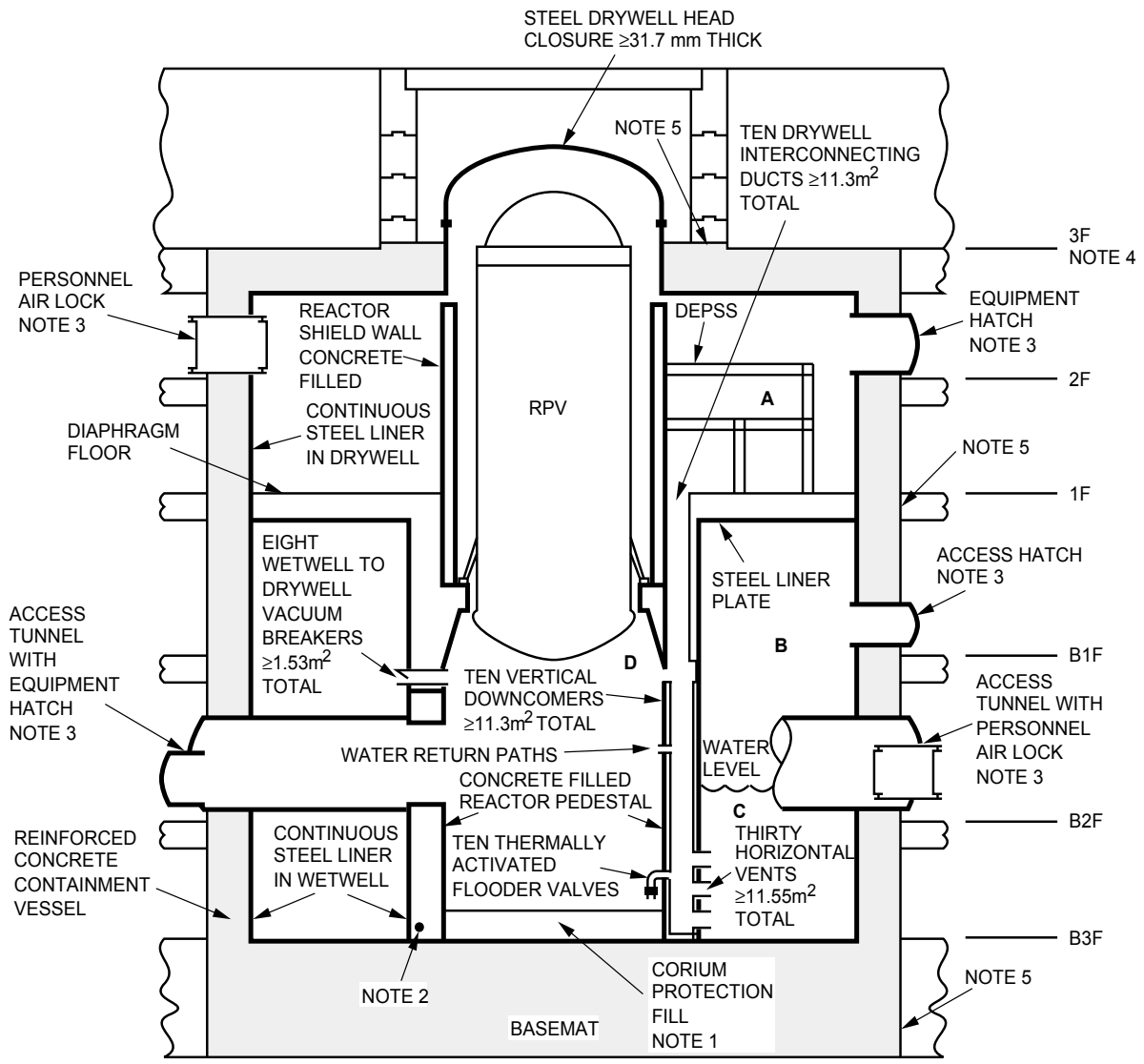

AREAS:

A. UPPER DRYWELL

B. WETWELL GAS SPACE

C. SUPPRESSION POOL

D. LOWER DRYWELL

NOTES:

1. CORIUM PROTECTION FILL DEPTH IS ≥1.5m AND UNOBSTRUCTED SURFACE AREA IS ≥ 79m^2.
2. RPV PEDESTAL IN THE LOWER DRYWELL REGION HAS ≥1.64m CONCRETE THICKNESS (EXCEPT ADJACENT TO VERTICAL DOWNCOMERS).
3. PERSONNEL AND EQUIPMENT ACCESS POINTS ARE AT VARIOUS CIRCUMFERENTIAL LOCATIONS.
4. R/B FLOOR DESIGNATIONS, NOT PART OF PCS; SHOWN HERE FOR REFERENCE ONLY.
5. LINES BETWEEN (a) RCCV WALL AND R/B FLOOR SLABS, (b) RCCV TOP SLAB AND R/B POOL GATES AND (c) RCCV BASEMAT AND R/B BASEMAT SHOW CODE BOUNDARY OF RCCV (ASME CODE SECTION III DIVISION 2 STRUCTURE).

Figure 2.14.1 Primary Containment System

Table 2.14.1 Primary Containment System

Inspections, Tests, Analyses and Acceptance Criteria		
Design Commitment	**Inspections, Tests, Analyses**	**Acceptance Criteria**
1. The basic configuration of the PCS is as shown on Figure 2.14.1.	1. Inspections of the as-built system will be conducted.	1. The as-built PCS conforms with the basic configuration shown on Figure 2.14.1.
2. The primary containment pressure boundary defined in Section 2.14.1 is designed to meet ASME Code, Section III requirements.	2. Inspections of ASME Code required documents will be conducted.	2. An ASME Code Certified Stress Report exists for the pressure boundary components.
3. The ASME Code pressure boundary components of the PCS retain their integrity under internal pressures that will be experienced during service.	3. A structural integrity test (SIT) will be conducted on the pressure boundary components of the PCS per ASME Code requirements.	3. The results of the SIT of the pressure boundary components conform with the requirements of the ASME Code.
4. The maximum calculated pressures and temperatures for the design basis accident are less than design conditions.	4. Analyses of the design basis accident will be performed using as-built PCS data.	4. The maximum calculated pressures and temperatures are less than design conditions.
5. The primary containment pressure boundary including penetrations and isolation valves has a leak rate equal to or less than 0.5% per day (excluding MSIV leakage) of containment gas mass at the maximum calculated containment pressure for the design basis accident.	5. An integrated leak rate test of the primary containment will be conducted.	5. The primary containment pressure boundary including penetrations and isolation valves has a leak rate equal to or less than 0.5% per day (excluding MSIV leakage) of containment gas mass at the maximum calculated containment pressure for the design basis accident.
6. The design differential pressure of the diaphragm floor between the drywell and wetwell is 172.6 kPa in the downward direction.	6. An SIT will be conducted of the diaphragm floor with the drywell pressure greater than wetwell pressures by 1.0 times the design differential pressure.	6. An SIT report exists concluding that the diaphragm floor is able to withstand the design differential pressure.
7. The horizontal vent system consists of 30 vents configured as described in Section 2.14.1.	7. Inspection of the installed horizontal vent system will be conducted.	7. Confirmation that horizontal vent system is configured as described in Section 2.14.1.
8. MCR displays and alarms provided for the PCS are as defined in Section 2.14.1.	8. Inspections will be performed on the MCR displays and alarms for the PCS.	8. Displays and alarms exist or can be retrieved in the MCR as defined in Section 2.14.1.

Table 2.14.1 Primary Containment System (Continued)

Inspections, Tests, Analyses and Acceptance Criteria		
Design Commitment	**Inspections, Tests, Analyses**	**Acceptance Criteria**
9. The vacuum breaker position switches have adequate sensitivity to detect the allowable S/P bypass capability of the containment.	9. Analysis of the as-built vacuum breakers will be performed. These analyses will determine the maximum vacuum breaker flow area (drywell-to-wetwell) which could exist undetected by the as-installed position switches. The loss coefficients associated with the flow area will be evaluated on the basis of the drywell-to-wetwell flow path geometric details. The flow area and loss coefficients will be combined into an overall drywell- to-wetwell $A\sqrt{K}$ factor which will be compared to the allowable value.	9. The vacuum breaker position switches have adequate sensitivity to detect the allowable S/P bypass capability of the containment.
10. The water volume in the suppression pool including the vents is equal to or greater than 3580 m^3.	10. Analyses of the as-built PCS will be performed.	10. The water volume in the suppression pool including the vents is equal to or greater than 3580 m^3.
11. The SRVDL quencher arms are located at or below the elevation of the center layer of horizontal vents in the suppression pool. The quenchers are placed in the suppression pool in two radial ring. Eighteen of 10 equally spaced locations in each radial ring have quenchers installed.	11. Inspection of the installed SRVDL quenchers will be conducted.	11. The SRVDL quenchers are located within the suppression pool as described in Section 2.14.1.
12. The corium protection fill contains less than 4% of calcium carbonate material by weight.	12. Tests will be performed on corium protection fill materials to determine the calcium carbonate content in a test facility	12. Corium protection fill contains less than 4% of calcium carbonate material by weight.
13. Lower drywell imbedded sumps are protected by corium shields.	13. Inspections of the lower drywell sump corium protection shields will be performed.	13. Lower drywell imbedded sumps are protected by corium shields.

Table 2.14.1 Primary Containment System (Continued)

Inspections, Tests, Analyses and Acceptance Criteria		
Design Commitment	**Inspections, Tests, Analyses**	**Acceptance Criteria**
14. The containment internal structures are able to withstand the structural design basis loads as defined in Section 2.14.1.	14. A structural analysis will be performed which reconciles the as-built data with al design as defined in Section	14. A structural analysis report exists which concludes that the as-built internal structures are able to withstand the design basis loads as defined in Section 2.14.1.

2.14.2 Containment Internal Structures

No entry. Covered in Section 2.14.1.

2.14.3 Reactor Pressure Vessel Pedestal

No entry. Covered in Section 2.14.1.

2.14.4 Standby Gas Treatment System

Design Description

The Standby Gas Treatment System (SGTS) is used to filter the gaseous effluent from either the primary or secondary containment. The purpose of the SGTS is to limit the discharge of radioactivity to the environment on receipt of a signal from the Leak Detection System (LDS). SGTS consists of two redundant divisions. Figure 2.14.4 shows the basic system configuration and scope.

The SGTS is classified as safety-related.

Each division of the SGTS (except cooling fan and associated damper) is automatically initiated by signals from the LDS. Each SGTS division can be manually initiated from Main Control Room (MCR).

The SGTS maintains a negative pressure of 6.4 mm water gauge or greater in the secondary containment relative to the outdoor atmosphere within 20 minutes when the secondary containment is isolated. Each SGTS process fan capacity is at least 6800 m^3/h (21°C and 1 atmosphere abs.) with the secondary containment not isolated. The absorber efficiency for removal of all forms of iodine (elemental, organic, particulate, and hydrogen iodide) from the influent stream is at least 99%.

After SGTS initiation, each cooling fan starts automatically when a signal indicates that the process fan in that division is not operating.

The SGTS has four safety-related differential pressure sensors for monitoring secondary containment pressure with respect to ambient pressure outside. One sensor is located on each of the four sides of the Reactor Building.

The SGTS is classified as Seismic Category I.

The SGTS is located in the Reactor Building.

The SGTS Division B is powered from Class 1E Division II, except for the cooling fan and associated damper, which is powered by Class 1E Division III. The SGTS Division C is powered from Class 1E Division III, except for the cooling fan and associated damper, which is powered by Class 1E Division II. Each of the four differential pressure sensors is powered from its respective Class 1E division. In the SGTS, independence is provided between Class 1E divisions and also between the Class 1E divisions and non-Class 1E equipment.

Except for the common connection to the plant stack, each mechanical division of the SGTS (Divisions B and C) is physically separated from the other division.

The SGTS has the following displays and controls in the main control room:

(1) Parameter displays for the instruments shown on Figure 2.14.4.

(2) Controls and status indication for the active safety-related components shown on Figure 2.14.4.

(3) Manual system level initiation capability.

The safety-related electrical equipment is shown on Figure 2.14.4 and located in the Reactor Building is qualified for a harsh environment.

Inspections, Tests, Analyses and Acceptance Criteria

Table 2.14.4 provides a definition of the inspections, tests, and/or analyses, together with associated acceptance criteria, that will be undertaken for the SGTS.

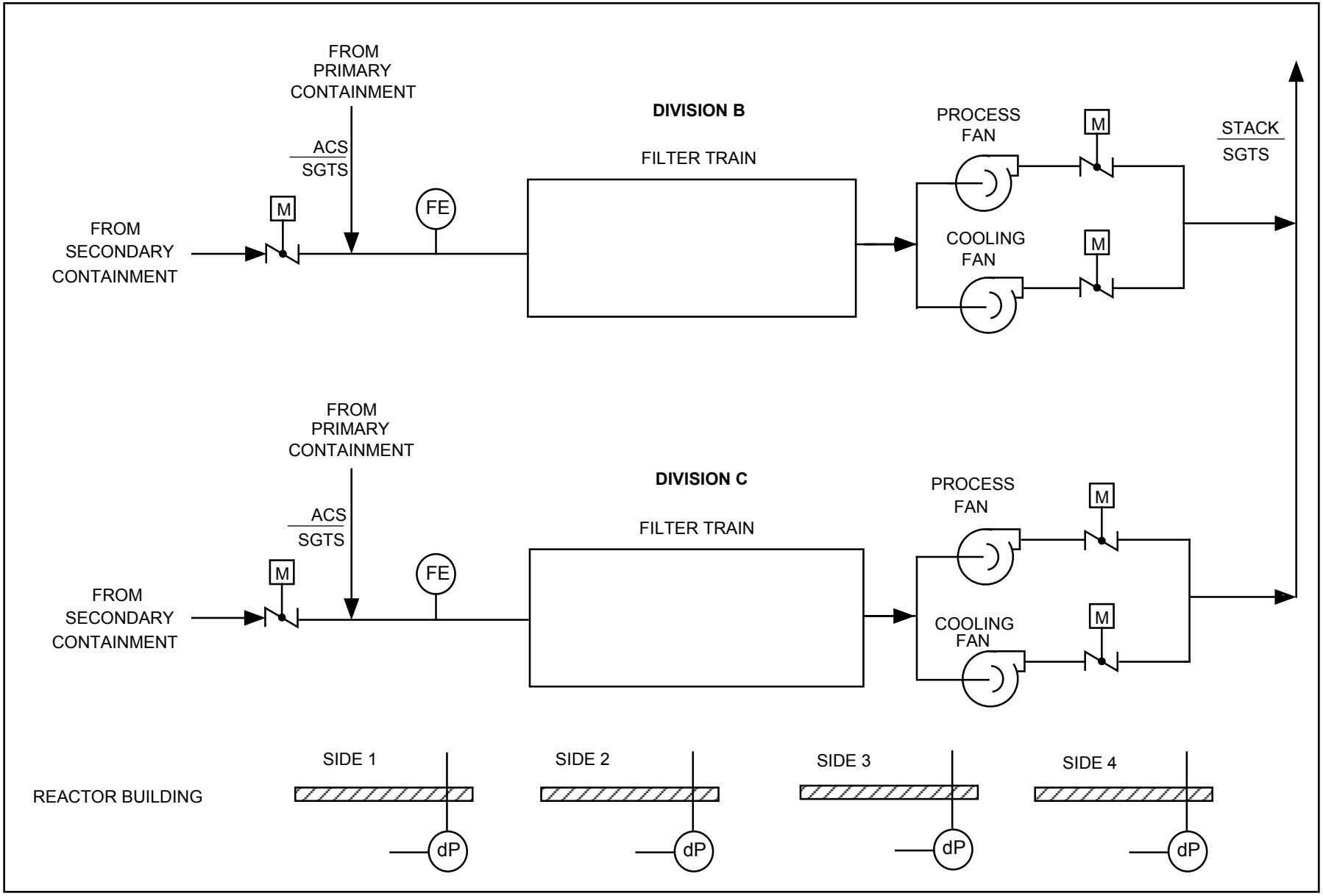

Figure 2.14.4 Standby Gas Treatment System

Table 2.14.4 Standby Gas Treatment System

Inspections, Tests, Analyses and Acceptance Criteria		
Design Commitment	**Inspections, Tests, Analyses**	**Acceptance Criteria**
1. The basic configuration of the SGTS is as shown on Figure 2.14.4.	1. Inspections of the as-built system will be conducted.	1. The as-built SGTS conforms with the basic configuration shown on Figure 2.14.4.
2. Each division of the SGTS (except cooling fan and associated damper) is automatically initiated by signals from the LDS.	2. Tests will be conducted on each as-built SGTS division using simulated initiation signals.	2. The process fan starts and dampers open to allow process flow.
3. Each SGTS division can be manually initiated from the MCR.	3. Tests will be conducted by initiating each division manually.	3. Each division of the SGTS receives an initiation signal.
4.	4.	4.
a. The SGTS maintains a negative pressure of 6.35 mm water gauge or greater in the secondary containment relative to the outdoor atmosphere within 20 minutes when the secondary containment is isolated.	a. Tests will be conducted on each as-built SGTS division.	a. The SGTS maintains a negative pressure of 6.35 mm water gauge or greater in the secondary containment relative to the outdoor atmosphere within 20 minutes when the secondary containment is isolated.
b. Each SGTS process fan capacity is at least 6800 m^3/h (at 21°C, 1 atmosphere abs.) with the secondary containment not isolated.	b. Tests will be conducted on each as-built SGTS division.	b. Each SGTS process fan capacity is at least 6800 m^3/h (at 21°C, 1 atmosphere abs.) with the secondary containment not isolated.
5. After SGTS initiation, each cooling fan starts automatically when a signal indicates that the process fan in that division is not operating.	5. Tests will be conducted on each division using signals indicating that the process fan is not operating.	5. The cooling fan starts automatically when a signal indicates that the process fan is not operating.
6. Each filter train will have at least 99% removal efficiency for all forms of iodine (elemental, organic, particulate and hydrogen iodide).	6.	6. Each filter train will have at least 99% removal efficiency for all forms of iodine (elemental, organic, particulate and hydrogen iodide).
	a. Tests will be conducted on each as-built filter train.	
	b. Tests in test facility will be conducted the iodine absorbing material.	

Table 2.14.4 Standby Gas Treatment System (Continued)

Inspections, Tests, Analyses and Acceptance Criteria		
Design Commitment	**Inspections, Tests, Analyses**	**Acceptance Criteria**
7. The SGTS Division B is powered from Class 1E Division II, except for the cooling fan and associated damper, which is powered by Class 1E Division III. The SGTS Division C is powered from Class 1E Division III, except for the cooling fan and associated damper, which is powered by Class 1E Division II. Each of the four differential pressure sensors is powered from its respective Class 1E division. In the SGTS, independence is provided between Class 1E divisions and also between the Class 1E divisions and non-Class 1E equipment.	7. a. Tests will be performed on the SGTS by providing a test signal in only one Class 1E division at a time. b. Inspections of the as-built Class 1E divisions in the SGTS will be performed.	7. a. The test signal exists only in the Class 1E division under test in the SGTS. b. In the SGTS, physical separation or electrical isolation exists between Class 1E divisions. Physical separation or electrical isolation exists between Class 1E divisions and non-Class 1E equipment.
8. Except for the common connection to the plant stack, each mechanical division of the SGTS (Divisions B and C) is physically separated from the other division.	8. Inspections of the as-built the SGTS will be performed.	8. Each mechanical division of the SGTS is physically separated from other mechanical division of the SGTS by structure and/or fire barriers.
9. MCR displays and controls provided for the SGTS are as defined in Section 2.14.4.	9. Inspections will be performed on the MCR displays and controls for the SGTS.	9. Displays and controls exist or can be retrieved in the MCR as defined in Section 2.14.4.

2.14.5 PCV Pressure and Leak Testing Facility

No entry for this system.

2.14.6 Atmospheric Control System

Design Description

The Atmospheric Control (AC) System consists of a nitrogen supply, injection lines, exhaust lines, bleed line, valves, controls, and instrumentation. The AC System also has the containment overpressure protection system (COPS). Figure 2.14.6 shows the basic system configuration and scope.

The AC System is capable of providing an inert atmosphere within the primary containment.

Except for the primary containment penetrations, isolation valves, and suppression pool level sensors, the AC System is classified as non-safety-related.

The outer rupture disk of the COPS has a rupture differential pressure of less than 0.03 MPa. The inner rupture disk of the COPS is selected such that the COPS has an actuation pressure of 0.72 MPa (absolute) ±5%. The COPS has the capacity to allow at least 28 kg/s steam flow when the containment is at the actuation pressure of the system.

The AC System primary containment penetrations, isolation valves, and suppression pool level sensors are classified as Seismic Category I. Figure 2.14.6 shows the ASME Code class for the AC System piping and components.

AC System components are located in the Reactor Building, except for the nitrogen supply.

Figure 2.14.6 shows the Class 1E divisional power assignments for the AC System components. In the AC System, independence is provided between the Class 1E divisions, and also between the Class 1E divisions and non-Class 1E equipment.

The main control room has control and open/close status indication for the containment isolation valves.

AC System components with display interfaces with the Remote Shutdown System (RSS) are shown on the Figure 2.14.6.

The safety-related electrical equipment located in the Reactor Building is qualified for a harsh environment.

The COPS pneumatic actuated valves shown on Figure 2.14.6 have active safety-related functions to both open and close, and perform these functions against a pressure of 0.72 MPa (absolute) ±5% and under fluid flow and temperature conditions.

The two valves in the containment overpressure protection system fail open on loss of

pneumatic pressure or loss of electrical power to the valve actuating solenoid. The other pneumatic valves shown on Figure 2.14.6 fail closed on loss of pneumatic pressure or loss of electrical power to the valve actuating solenoids.

Inspections, Tests, Analyses and Acceptance Criteria

Table 2.14.6 provides a definition of the inspections, tests and/or analyses, together with associated criteria, which will be undertaken for the AC System.

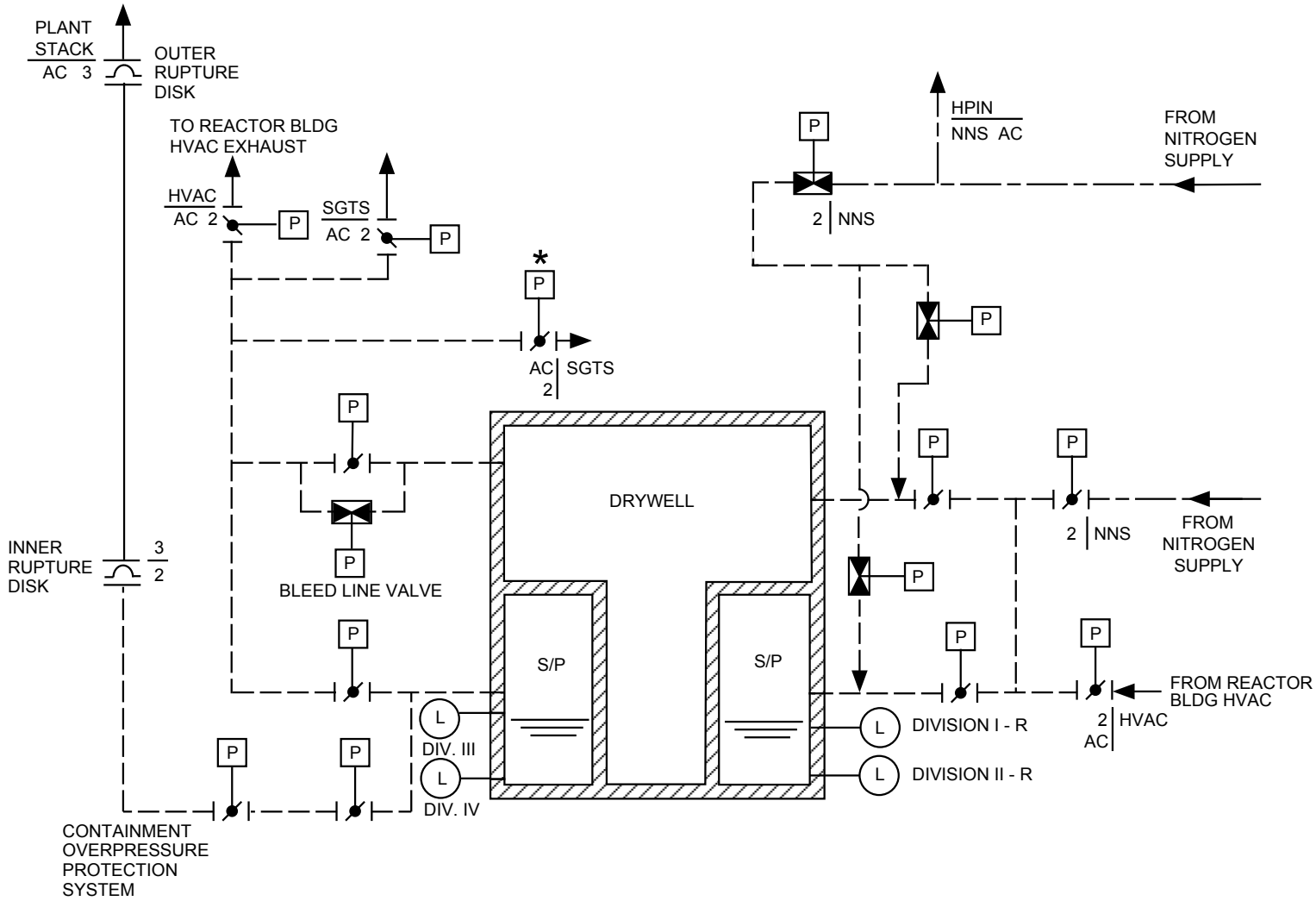

NOTES:
1. INBOARD CONTAINMENT ISOLATION VALVES ARE POWERED FROM CLASS 1E DIVISION II OUTBOARD CONTAINMENT ISOLATION VALVES ARE POWERED FROM CLASS 1E DIVISION I EXCEPT AS NOTED WITH " * ", WHICH IS POWERED FROM CLASS 1E DIVISION III.
2. THE COPS FLOW PATH FROM THE PRIMARY CONTAINMENT TO THE PLANT STACK HAS NO VALVES OTHER THAN THOSE SHOWN ON THE FIGURE.
3. THE ACS HAS PROVISIONS FOR SUPPLYING NITROGEN TO THE COPS PIPING BETWEEN THE INNER AND OUTER RUPTURE DISKS.

Figure 2.14.6 Atmospheric Control System

Table 2.14.6 Atmospheric Control System

Inspections, Tests, Analyses and Acceptance Criteria		
Design Commitment	**Inspections, Tests, Analyses**	**Acceptance Criteria**
1. The basic configuration of the AC System is as shown on Figure 2.14.6.	1. Inspections of the as-built AC System will be conducted.	1. The as-built AC System conforms with the basic configuration shown on Figure 2.14.6.
2. The ASME Code components of the AC System retain their pressure boundary integrity under internal pressures that will be experienced during service.	2. A pressure test will be conducted on those Code components of the AC System required to be pressure tested by the ASME Code.	2. The results of the pressure test of the ASME Code components of the AC System conform with the requirements in ASME Code Section III.
3. The outer rupture disk of the COPS has a rupture differential pressure of less than 0.03 MPa. The inner rupture disk of the COPS is selected such that the COPS has an actuation pressure of 0.72 MPa (absolute) ±5%.	3. Tests will be conducted in a test facility to determine rupture disk bursts conditions.	3. The outer rupture disk of the COPS has a rupture differential pressure of less than 0.03 MPa. The inner rupture disk of the COPS is selected such that the COPS has an actuation pressure of 0.72 MPa (absolute) ±5%.
4. The COPS has the capacity to allow at least 28 kg/s steam flow when the containment is at the actuation pressure of the system.	4. Analyses of the steam flow rate will be conducted for as-built system. These analyses will consider compressible steam flow and the as-built system loss coefficients.	4. The COPS has the capacity to allow at least 28 kg/s steam flow when the containment is at the actuation pressure of the system.
5. Figure 2.14.6 shows the Class 1E divisional power assignments for the AC System components. In the AC System, independence is provided between Class 1E divisions, and between Class 1E divisions and non-Class 1E equipment.	5. a. Tests will be performed in the AC System by providing a test signal in only one Class 1E division at a time. b. Inspections of the as-installed Class 1E divisions in the AC System will be performed.	5. a. The test signal exists only in the Class 1E division under test in the AC System. b. In the AC System physical separation or electrical isolation exists between Class 1E divisions. Physical separation or electrical isolation exists between these Class 1E divisions and non-Class 1E equipment.

Table 2.14.6 Atmospheric Control System (Continued)

Inspections, Tests, Analyses and Acceptance Criteria		
Design Commitment	**Inspections, Tests, Analyses**	**Acceptance Criteria**
6. Main control room displays and controls provided for the AC System are as defined in Section 2.14.6.	6. Inspections will be performed on the main control room displays and controls for the AC System.	6. Displays and controls exist or can be retrieved in the main control room as defined in Section 2.14.6.
7. RSS displays provided for the AC System are as defined in Section 2.14.6.	7. Inspections will be performed on the RSS displays for the AC System.	7. Displays exist on the RSS as defined in Section 2.14.6.
8. The COPS pneumatic actuated valves shown on Figure 2.14.6 have active safety-related functions to both open and close, and perform these functions against a pressure of 0.72 MPa (absolute) ±5% and under fluid flow and temperature conditions.	8. Tests will be conducted in a test facility for both opening and closing under differential pressure, fluid flow and temperature conditions.	8. Upon receipt of an actuating signal, each valve both opens and closes.
9. The two valves in the containment overpressure protection system fail open on loss of pneumatic pressure or loss of electrical power to the valve actuating solenoid. The other pneumatic valves shown on Figure 2.14.6 fail closed on loss of pneumatic pressure or loss of electrical power to the valve actuating solenoids.	9. Tests will be conducted on the as-built AC System pneumatic valves.	9. The two valves in the containment overpressure protection system fail open on loss of pneumatic pressure or loss of electrical power to the valve actuating solenoid. The other pneumatic valves shown on Figure 2.14.6 fail closed on loss of pneumatic pressure or loss of electrical power to the valve actuating solenoids.

2.14.7 Drywell Cooling System

Design Description

The Drywell Cooling (DWC) System circulates the drywell atmosphere through coolers, thus maintaining its temperature during plant operation. Figure 2.14.7 shows the basic system configuration and scope.

The DWC System consists of three fan coil units and two chilled water units. Each fan coil unit consists of a cooling coil and a fan. These units are cooled by the Reactor Building Cooling Water (RCW) System. Each chilled water unit consists of a cooling coil only. These units are cooled by the Heating Ventilating and Air Conditioning Normal Cooling (HNCW) System.

The DWC System is classified as non-safety-related.

The DWC System is located inside the drywell.

Inspections, Tests, Analyses and Acceptance Criteria

Table 2.14.7 provides a definition of the inspections, tests and/or analyses, together with associated acceptance criteria, which will be undertaken for the DWC System.

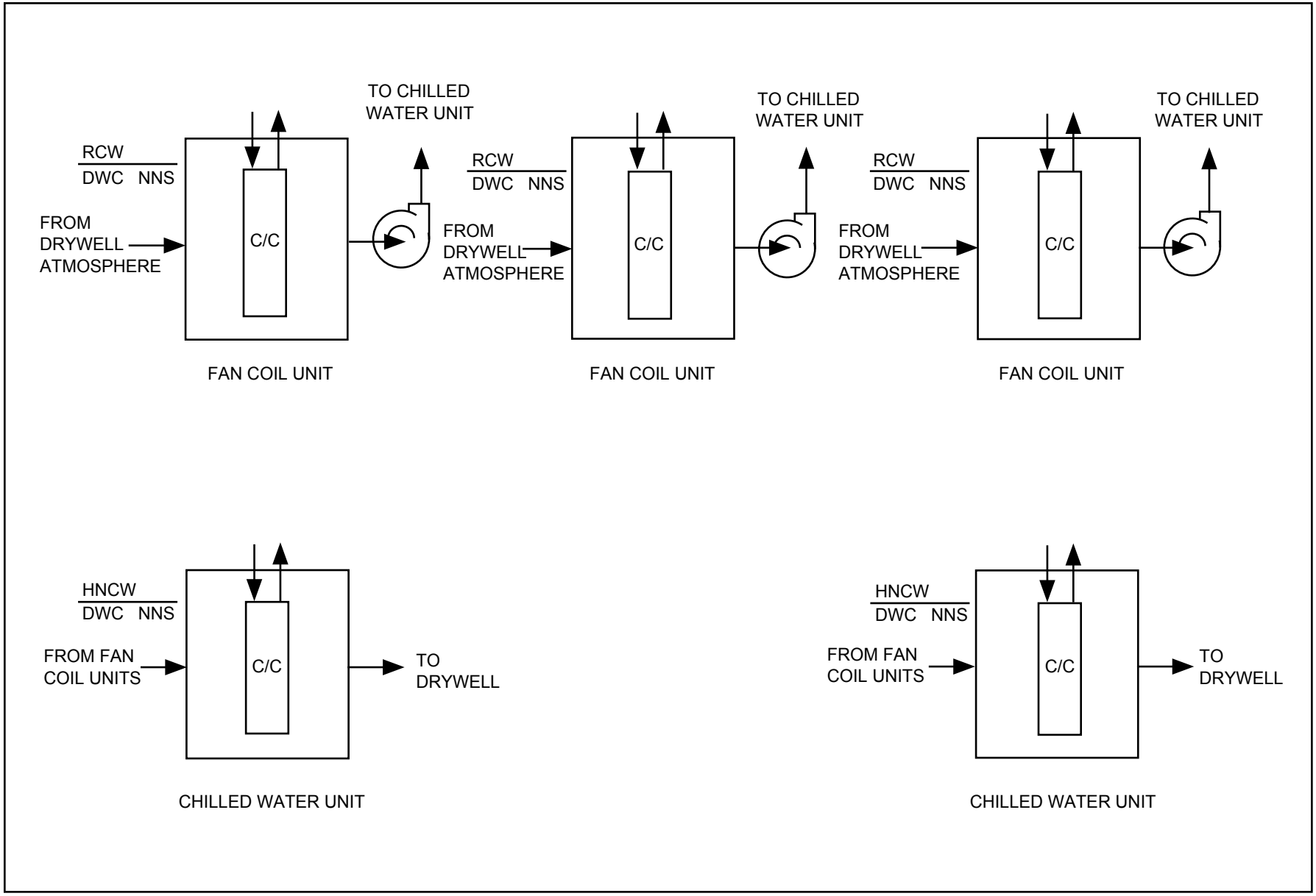

Figure 2.14.7 Drywell Cooling System

Table 2.14.7 Drywell Cooling System

Inspections, Tests, Analyses and Acceptance Criteria		
Design Commitment	**Inspections, Tests, Analyses**	**Acceptance Criteria**
1. The basic configuration of the DWC System is as shown on Figure 2.14.7.	1. Inspections of the as-built system configuration will be conducted.	1. The as-built DWC System conforms with the basic configuration shown in Figure 2.14.7.

2.14.8 Flammability Control System

Design Description

The Flammability Control System (FCS) is provided to control the potential buildup of hydrogen and oxygen in the containment from radiolysis of water after a design basis loss-of-coolant accident (LOCA). The system consists of two independent and redundant hydrogen and oxygen recombiners. Cooling water required for operation of the system after a LOCA is taken from the Residual Heat Removal (RHR) System. Figure 2.14.8 shows the basic system configuration and scope.

The FCS is classified as safety-related.

After a LOCA, the system can be manually actuated from the main control room if high oxygen concentrations exist in the primary containment. Each recombiner removes gas from the drywell, recombines the oxygen with hydrogen, and returns the gas mixture, along with the condensate to the wetwell.

The system is classified as Seismic Category I. Figure 2.14.8 shows ASME Code class for the FCS piping and components.

The FCS is located in the Reactor Building.

Each of the two FCS divisions is powered from the respective Class 1E division as shown on Figure 2.14.8. In the FCS, independence is provided between Class 1E divisions, and also between the Class 1E divisions and non-Class 1E equipment.

Each mechanical division of the FCS (Divisions B and C) is physically separated from the other division.

The FCS has the following displays and controls in the main control room:

(1) Controls and status indication for the valves shown on Figure 2.14.8.

(2) Controls and status indication for the recombiner unit.

FCS components with display and control interfaces with the Remote Shutdown System (RSS) is shown on Figure 2.14.8.

The safety-related electrical equipment shown on Figure 2.14.8, and included in the recombiner units, is qualified for a harsh environment.

The motor operated valves (MOVs) shown on Figure 2.14.8 and active safety-related MOVs in the recombiners, if any, have active safety-related functions to both open and close, and perform these functions under differential pressure, fluid flow, and temperature conditions.

The check valves (CVs) shown on Figure 2.14.8 have active safety-related functions to both open and closer under system pressure, fluid flow, and temperature conditions.

The pneumatic valves shown on Figure 2.14.8 fail to the closed position in the event of loss of pneumatic pressure or loss of electrical power to the valve actuating solenoids.

Inspections, Tests, Analyses and Acceptance Criterial

Table 2.14.8 provides a definition of the inspections, tests, and/or analyses, together with associated acceptance criteria, which will be undertaken for the FCS.

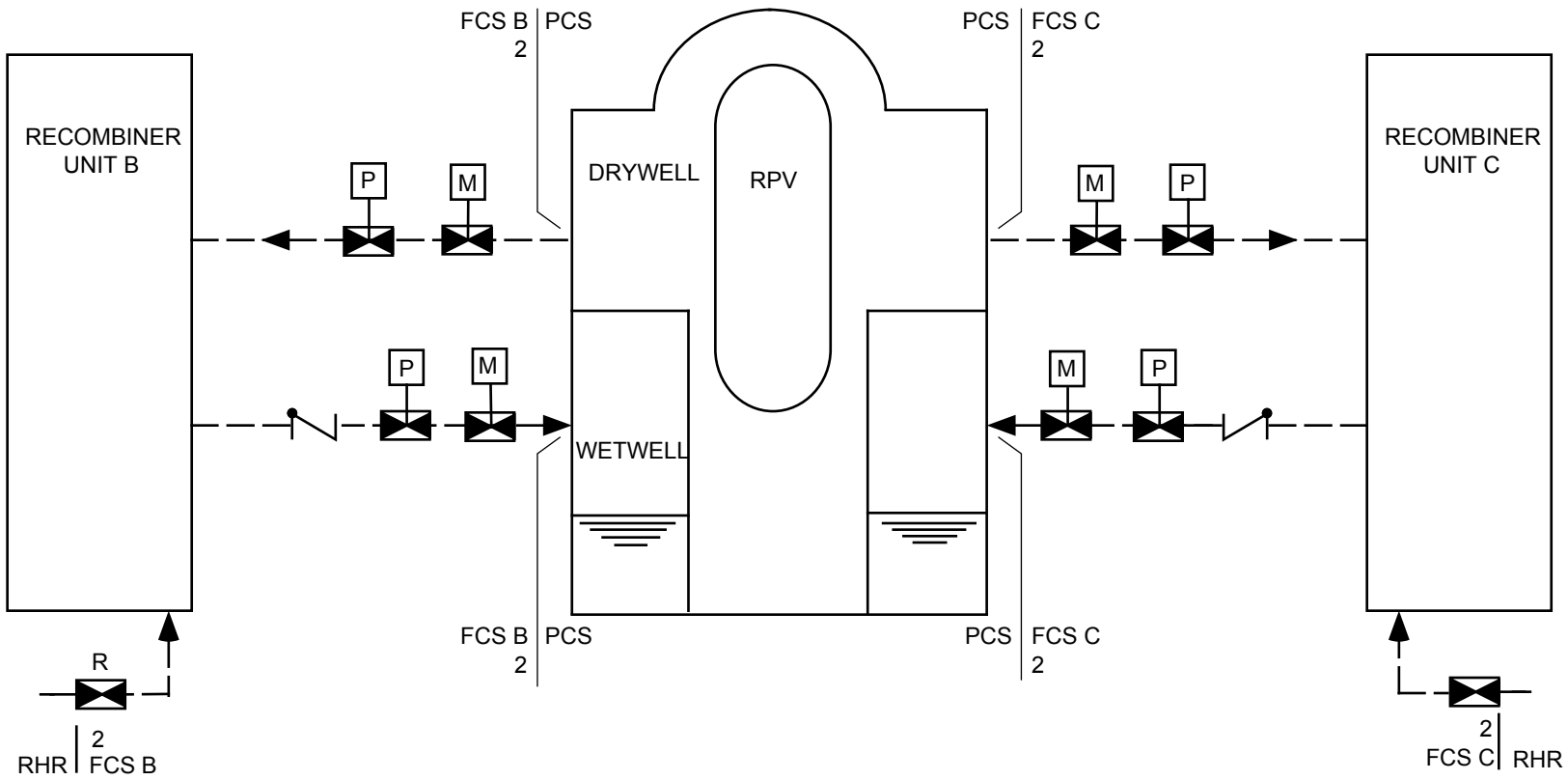

NOTE:
1. CLASS 1E ELECTRICAL POWER FOR FCS UNIT B IS SUPPLIED FROM DIVISION II EXCEPT FOR THE PNEUMATIC ISOLATION VALVE DUAL SOLENOIDS, WHICH IS DIVISIONS I AND III. UNIT C IS SUPPLIED FROM DIVISION III EXCEPT FOR THE OUTBOARD PNEUMATIC ISOLATION VALVE DUAL SOLENOIDS, WHICH ARE DIVISION I AND II.

Figure 2.14.8 Flammability Control System

Table 2.14.8 Flammability Control System

Inspections, Tests, Analyses and Acceptance Criteria		
Design Commitment	**Inspections, Tests, Analyses**	**Acceptance Criteria**
1. The basic configuration for the FCS is as shown on Figure 2.14.8.	1. Inspections of the as-built system will be conducted.	1. The as-built FCS conforms with the basic configuration shown on Figure 2.14.8.
2. The ASME Code components of the FCS retain their pressure boundary integrity under internal pressures that will be experienced during service.	2. A pressure test will be conducted on those Code components of the FCS required to be pressure tested by the ASME code.	2. The results of the pressure test of the ASME code components of the FCS conform with the requirements in the ASME Code, Section III.
3. Each of the two FCS divisions is powered from the respective Class 1E division as shown on Figure 2.14.8. In the FCS, independence is provided between Class 1E divisions, and between Class 1E divisions and non-Class 1E equipment.	3. a. Tests will be performed in the FCS by providing a test signal in only one Class 1E division at a time. b. Inspection of the as-installed Class 1E divisions in the FCS will be performed.	3. a. The test signal exists only in the Class 1E division under test in the FCS. b. Physical separation or electrical isolation exists between Class 1E divisions in the FCS. Physical separation or electrical isolation exists between Class 1E divisions and non-Class 1E equipment in the FCS.
4. Each mechanical division of the FCS (Divisions B, C) is physically separated from the other divisions.	4. Inspections of the as-built FCS will be conducted.	4. Each mechanical division of the FCS is physically separated from the other mechanical divisions of FCS by structural and/or fire barriers.
5. Main control room displays and controls provided for the FCS are as defined in Section 2.14.8.	5. Inspections will be performed on the main control room displays and controls for the FCS.	5. Displays and controls exist or can be retrieved in the main control room as defined in Section 2.14.8.
6. RSS display and control provided for the FCS are as defined in Section 2.14.8.	6. Inspections will be performed on the RSS display and control for the FCS.	6. Display and control exists on the RSS as defined in Section 2.14.8.
7. MOVs designated in Section 2.14.8 as having an active safety-related function open and close under differential pressure and fluid flow and temperature conditions.	7. Tests of installed valves for both opening and closing will be conducted under preoperational differential pressure, fluid flow, and temperature conditions.	7. Upon receipt of the actuating signal, each MOV both opens and closes, depending on the valve's safety function.

Table 2.14.8 Flammability Control System (Continued)

Inspections, Tests, Analyses and Acceptance Criteria		
Design Commitment	**Inspections, Tests, Analyses**	**Acceptance Criteria**
8. CVs designated in Section 2.14.8 as having an active safety-related function open and close under system pressure, fluid flow, and temperature conditions.	8. Tests of installed valves for both opening and closing will be conducted under preoperational system pressure, fluid flow, and temperature conditions.	8. Based on the direction of the differential pressure across the valve, each CV opens or closes depending upon the valve's safety functions.
9. The pneumatic valves shown on Figure 2.14.8 fail close in the event of loss of pneumatic pressure or loss of electrical power to the valve actuating solenoid.	9. Tests will be conducted on the as-built FCS pneumatic valves.	9. The pneumatic valves shown on Figure 2.14.8 fail close in the event of loss of pneumatic pressure or loss of electrical power to the valve actuating solenoid.

2.14.9 Suppression Pool Temperature Monitoring System

Design Description

The Suppression Pool Temperature Monitoring (SPTM) System monitors the suppression pool water temperature and provides signals for initiation of automatic scram on high suppression pool temperature. Figure 2.14.9 shows the SPTM System control interfaces.

The SPTM System is classified as a Class 1E safety-related system and consists of four Class 1E divisions (Division I, II, III, and IV) of temperature sensors and their respective logic processors.

The SPTM System temperature sensors are located in the suppression pool. There are four divisions of temperature sensors in each quadrant of the suppression pool.

In each SPTM System division, the suppression pool average temperature is calculated by corresponding divisional logic processors of Safety System Logic and Control (SSLC) using output signals from SPTM temperature sensors. In each SSLC SPTM division, a suppression pool average temperature trip signal is generated by the logic processor and sent to the Reactor Protection System (RPS) when the calculated divisional average temperature exceeds the high suppression pool average temperature setpoint.

Each of the four SPTM System divisional logic is powered from its respective divisional Class 1E power supply. Independence is provided between Class 1E divisions, and also between Class 1E divisions and non-Class 1E equipment.

The SPTM System temperature sensors are located in the suppression pool; the SPTM System logic processors are located in the Control Building.

The SPTM System has parameter displays for suppression pool temperatures in the main control room (MCR).

The SPTM System provides Division I and II suppression pool temperature displays to the Remote Shutdown System (RSS).

Inspections, Tests, Analyses and Acceptance Criteria

Table 2.14.9 provides a definition of the inspections, tests, and/or analyses, together with associated acceptance criteria, which will be undertaken for the SPTM System.

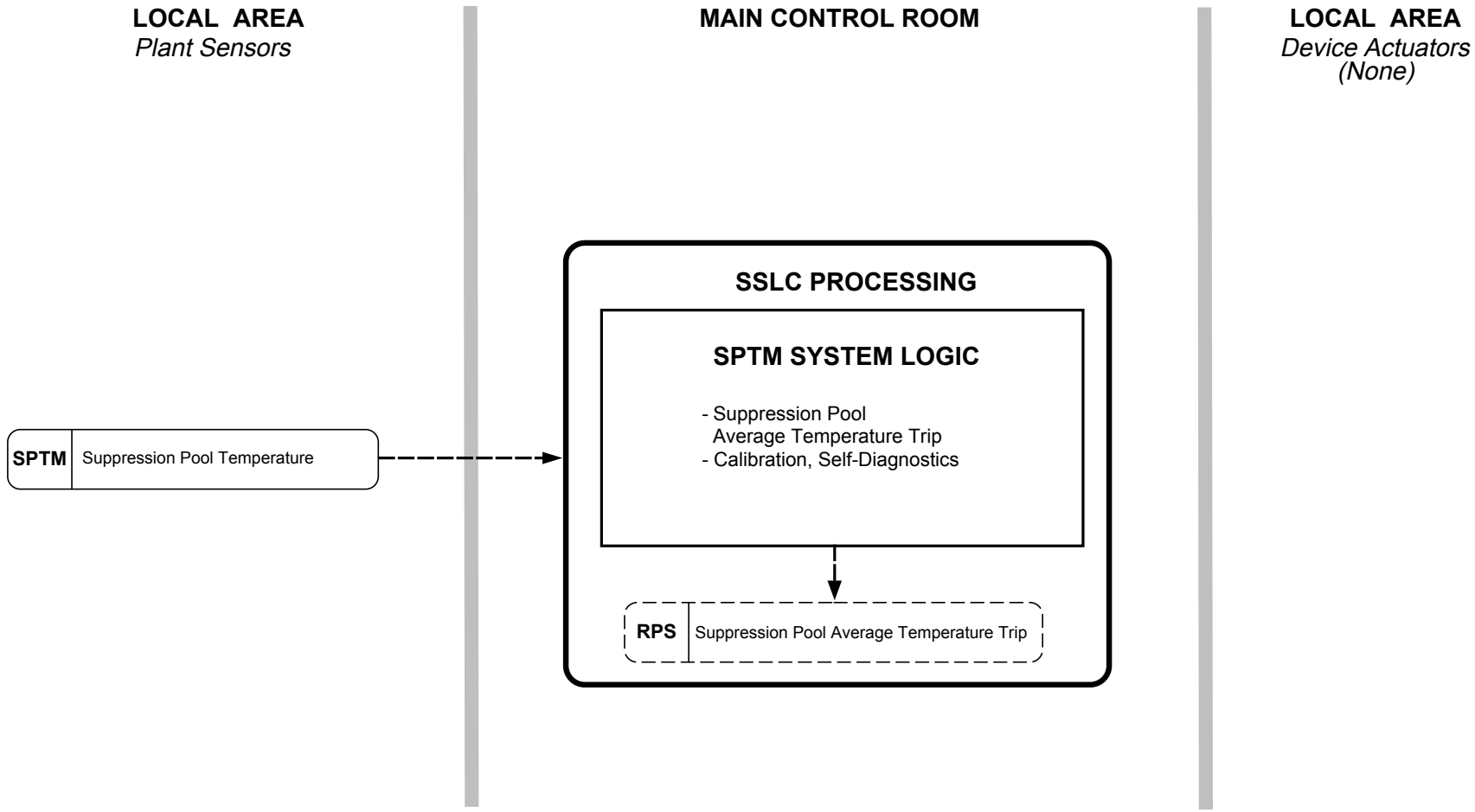

NOTES:
1. Diagram represents one of four divisions.
2. See Section 3.4, Figure 3.4b for SSLC processing.

Figure 2.14.9 Suppression Pool Temperature Monitoring System Control Interface Diagram

Table 2.14.9 Suppression Pool Temperature Monitoring System

Inspections, Tests, Analyses and Acceptance Criteria		
Design Commitment	**Inspections, Tests, Analyses**	**Acceptance Criteria**
1. The equipment comprising the SPTM System is defined in Section 2.14.9.	1. Inspection of the as-built system will be conducted.	1. The as-built SPTM System conforms with the description in Section 2.14.9.
2. In each SPTM System division, the suppression pool average temperature is calculated by the divisional SSLC logic processors using output signals from the temperature sensors. In each SPTM System division, a high suppression pool average temperature trip signal is generated by the SSLC logic processor and sent to the RPS when the respective calculated divisional average temperature exceeds the high suppression pool average temperature setpoint.	2. Tests will be conducted in each division of the SPTM System using simulated temperature sensor signals.	2. In each SPTM System division, a high suppression pool average temperature trip signal is generated by the SSLC logic processor and sent to the RPS when the calculated divisional average temperature exceeds the high suppression pool average temperature setpoint.
3. Each of the four SPTM System divisional logics is powered from its respective divisional Class 1E power supply. In the SPTM System, independence is provided between Class 1E divisions, and between Class 1E divisions and non-Class 1E equipment.	3. a. Tests will be performed on the SPTM System by providing a test signal in only one Class 1E division at a time. b. Inspections of the as-built Class 1E divisions in the SPTM System will be performed.	3. a. A test signal exists only in the Class 1E division under test in the SPTM System. b. In the SPTM System, physical separation or electrical separation exists between Class 1E divisions. Physical separation or electrical isolation exists between these Class 1E divisions and non-Class 1E equipment.
4. MCR displays provided for the SPTM System are as defined in Section 2.14.9.	4. Inspections will be conducted on the MCR displays for the SPTM System.	4. Displays exist or can be retrieved in the MCR as defined in Section 2.14.9.
5. RSS displays provided for the SPTM System are as defined in Section 2.14.9.	5. Inspections will be conducted on the RSS displays for the SPTM System.	5. Displays exist on the RSS as defined in Section 2.14.9.

2.15.1 Foundation Work

No entry. Covered in Section 2.15.10.

2.15.2 Turbine Pedestal

No entry. Covered in Section 2.15.11.

2.15.3 Cranes and Hoists

Design Description

Cranes and Hoists are used for maintenance and refueling tasks.

During refueling/servicing, the Reactor Building (R/B) crane handles the shield plugs, drywell and reactor vessel heads, and the steam dryer/separators. The minimum crane coverage includes the R/B refueling floor laydown area, and the R/B equipment storage pit. During plant operation, the crane handles new fuel shipping containers and the spent fuel shipping casks. For these activities, the minimum crane coverage includes the new fuel vault, the R/B equipment hatches, and the spent fuel cask loading and washdown pits.

The upper drywell hoists are used during outages to service valves and equipment inside the upper drywell.

The lower drywell hoists service valves and equipment inside the lower drywell during outages.

The Cranes and Hoists are classified as non-safety-related.

The R/B crane is interlocked to prevent movement of heavy loads over the spent fuel storage portion of the spent fuel storage pool. The hoisting and braking system of the R/B crane are redundant.

The R/B crane has a lifting capacity greater than or equal to the heaviest expected load.

The upper drywell hoists and lower drywell hoists are classified as Seismic Category I.

Inspections, Tests, Analyses and Acceptance Criteria

Table 2.15.3 provides a definition of the inspections, tests, and/or analyses, together with associated acceptance criteria, which will be undertaken for the Cranes and Hoists.

Table 2.15.3 Cranes and Hoists

Inspections, Tests, Analyses and Acceptance Criteria		
Design Commitment	**Inspections, Tests, Analyses**	**Acceptance Criteria**
1. The basic configuration of the Cranes and Hoists System is described in Section 2.15.3.	1. Inspection of the as-built system will be conducted.	1. The as-built Cranes and Hoists System conforms with the description in Section 2.15.3
2. The R/B crane is interlocked to prevent movement of heavy loads over the spent fuel storage portion of the spent fuel storage pool.	2. Tests will be conducted of the as-built R/B crane movement using a heavy load.	2. The R/B crane interlock prevents the carrying of a load greater than one fuel assembly and its associated handling devices over the spent fuel storage portion of the spent fuel storage pool.
3. The R/B crane has a lifting capacity greater than or equal to the heaviest expected load.	3. Analyses will be performed to determine the heaviest expected load. Load tests of the as-built R/B crane will be conducted.	3. The rated load for the as-built R/B crane equals or exceeds the heaviest expected load. The R/B crane carries: a. A static load at 125% of rated load. b. An operational load at 100% of rated load.

2.15.4 Elevators

No entry for this system.

2.15.5 Heating, Ventilating and Air Conditioning Systems

Design Description

Control Room Habitability Area HVAC System

The Control Room Habitability Area (CRHA) Heating, Ventilating and Air Conditioning (HVAC) System provides a controlled environment for personnel comfort and safety, and for the operation of equipment in the main control area envelope (MCAE). The system consists of two (redundant) divisions. Each division consists of an air conditioning unit with two supply fans, two exhaust fans, and an emergency filtration unit with two circulating fans. The emergency filtration unit will have at least 99% removal efficiency for all forms of iodine (elemental, organic, particulate, and hydrogen iodide) from the influent system.

Toxic gas monitors may be required in the outside air intakes of the CRHA HVAC System; these sensors are not in the Certified Design.

Figure 2.15.5a shows the basic configuration and scope for the CRHA HVAC System.

The CRHA HVAC System is classified as safety-related.

The CRHA HVAC System operates in the following modes:

(1) Normal operating.

(2) High radiation.

(3) Outside smoke.

(4) Smoke removal.

Normal Operating Mode

In the normal operating mode, one air conditioning unit, one supply fan, and one exhaust fan operate in each division. The exhaust fan automatically starts when the supply fan is started.

The MCAE is maintained at a minimum pressure of 3.2 mm water gauge above the outside atmosphere.

High Radiation Mode

On receipt of a Process Radiation Monitoring (PRM) System signal for high radiation in the outside air intake of the operating division, the normal outside air intake dampers close, the exhaust air dampers close, the exhaust fan stops, the minimum outside air intake dampers open, and one fan of the emergency filtration unit starts.

In the high radiation mode, a positive pressure of at least 3.2 mm water gauge is maintained in the MCAE relative to the outside atmosphere. Each emergency filtration unit treats a mixture of MCAE recirculated air and outside makeup air to maintain the positive pressure with not more than 3400 m^3 per hour (@ one atmosphere absolute pressure, 0°C) of outside air.

The redundant division of the CRHA HVAC System starts on a low flow signal from the operating emergency filtration unit. The redundant division is connected to an outside air intake, which is separated from the other intake by a minimum of 50m.

Outside Smoke Mode

When smoke detection sensors in the operating outside air intake detect smoke, a signal will initiate MCAE air recirculation by isolating the outside air intake, closing the exhaust damper and stopping the exhaust fan.

Smoke Removal Mode

The smoke removal mode is manually initiated by closing the recirculation damper and starting both exhaust fans at high speed in conjunction with a supply fan.

The remaining discussion in this section is not mode-specific and applies (unless stated otherwise) to the entire CRHA HVAC System.

MCAE temperature is maintained between 21°C and 26°C, with a relative humidity between 10% and 60%, except when in the smoke removal mode.

The CRHA HVAC System is classified as Seismic Category I. The CRHA HVAC System is located in the Control Building.

Each of the two CRHA HVAC System divisions, with the exception of the motor operated isolation dampers, is powered from the respective Class 1E division as shown on Figure 2.15.5a. Each pair of motor operated isolation dampers in series is powered from two independent Class 1E divisions (one damper is powered from Class 1E division II and the other damper is from Class 1E division III). In the CRHA HVAC System, independence is provided between Class 1E divisions, and also between the Class 1E divisions and non-Class 1E equipment.

Each mechanical division of the CRHA HVAC System (Divisions B and C) is physically separated from the other division, except for the common ducts in the MCAE.

Fire dampers with fusible links in HVAC duct work close under air flow conditions.

The CRHA HVAC System has the following displays and controls in the main control room:

(1) Controls and status indication for the active safety-related components shown on Figure 2.15.5a.

(2) Parameter displays for the instruments shown on Figure 2.15.5a, except for the smoke detectors.

Interface Requirements

Toxic gas monitors will be located in the outside air intakes of the CRHA HVAC System, if the site is adjacent to toxic gas sources with the potential for releases of significance to plant operating personnel in the MCAE. These monitors should have the following requirements:

(1) Be located in the outside air intakes of each division of the CRHA HVAC System.

(2) Be capable of detecting toxic gas concentrations at which personnel protective actions must be initiated.

Control Building Safety-Related Equipment Area HVAC System

The Control Building Safety-Related Equipment Area (CBSREA) HVAC System provides a controlled temperature environment for the operation of equipment in the Control Building, excluding the MCAE. The system also limits hydrogen concentration in the battery rooms. The CBSREA HVAC System consists of three independent safety-related divisions, each serving a designated area. Each division consists of an air conditioning unit with two supply fans, and two exhaust fans.

The CBSREA HVAC System also ventilates rooms that contain non-safety-related equipment and provides supplemental cooling in these rooms using non-safety-related fan coil units (FCUs).

The basic system configuration and scope for the CBSREA HVAC System is shown on Figures 2.15.5b, 2.15.5c and 2.15.5d.

The CBSREA HVAC System is classified as safety-related except for the FCUs.

The CBSREA HVAC System operates in the following modes:

(1) Normal operating mode, including accident conditions.

(2) Smoke removal mode.

Normal Operating Mode

In the normal operating mode, one air conditioning unit, one supply fan, and one exhaust fan of each division operate. The exhaust fan automatically starts when the supply fan is started.

In the areas served by the CBSREA HVAC System, the temperature is maintained below 40°C.

Hydrogen concentration is maintained at less than 2% by volume in the battery rooms.

Smoke Removal Mode

The smoke removal mode is manually initiated by closing the recirculation damper, and starting both exhaust fans in conjunction with a supply fan to allow outside air purging of the affected Control Building area. The normal operating mode is used to remove smoke from the battery rooms.

The remaining discussion in this section is not mode-specific and applies (unless stated otherwise) to the entire CBSREA HVAC System.

The CBSREA HVAC System is classified as Seismic Category I, except for the non-safety-related fan coil units. The CBSREA HVAC System is located in the Control Building.

Each of the three CBSREA HVAC System divisions is powered from the respective Class 1E division as shown on Figures 2.15.5b, 2.15.5c and 2.15.5d. In the CBSREA HVAC System, independence is provided between Class 1E divisions, and also between the Class 1E divisions and non-Class 1E equipment.

Each mechanical division of the CBSREA HVAC System (Divisions A, B and C) is physically separated from the other divisions. CBSREA HVAC System Division B duct penetrations of Division IV firewalls are provided with fire dampers.

Fire dampers with fusible links in HVAC duct work close under air flow conditions.

The CBSREA HVAC System has the following displays and controls in the main control room:

(1) Controls and status indication for the active safety-related components shown on Figures 2.15.5b, 2.15.5c and 2.15.5d.

(2) Parameter displays for the instruments shown on Figures 2.15.5b, 2.15.5c and 2.15.5d.

Reactor Building HVAC System

The Reactor Building (R/B) HVAC System provides a controlled environment for the operation of equipment in the Reactor Building.

The Reactor Building HVAC System consists of three independent safety-related divisions. Each division is composed of the following systems:

(1) R/B Safety-Related Equipment HVAC System.

(2) R/B Safety-Related Electrical Equipment HVAC System.

(3) R/B Safety-Related Diesel Generator HVAC System.

The Reactor Building HVAC System includes the following non-safety-related systems:

(1) R/B Secondary Containment HVAC System.

(2) R/B Primary Containment Supply/Exhaust System.

(3) R/B Main Steam Tunnel HVAC System.

(4) R/B Non-Safety-Related Equipment HVAC System.

(5) R/B Reactor Internal Pump (RIP) Adjustable Speed Drive (ASD) Control Panel HVAC System

R/B Safety-Related Equipment HVAC System

The R/B Safety-Related Equipment HVAC System provides cooling of safety-related equipment areas, and consists of independent fan coil units. Figure 2.15.5e shows the basic system configuration and scope.

The R/B Safety-Related Equipment HVAC System is classified as safety-related.

The Residual Heat Removal (RHR) System, High Pressure Core Flooder (HPCF) System and Reactor Core Isolation Cooling (RCIC) System pump room FCUs are automatically initiated upon startup of their respective room process pump. The Containment Atmospheric Monitoring System (CAMS) and Standby Gas Treatment System (SGTS) room FCUs are automatically initiated upon isolation of the Reactor Building Secondary Containment HVAC System.The Flammability Control System (FCS) room FCUs are also initiated upon a manual FCS start signal.

The temperature in the safety-related equipment areas is maintained below 40°C, except for the RHR, HPCF, and RCIC pump rooms, which are maintained below 66°C during pump operation.

The R/B Safety-Related Equipment HVAC System is classified as Seismic Category I. The R/B Safety-Related Equipment HVAC System is located in the Reactor Building.

Each of the three divisions of the R/B Safety-Related Equipment HVAC System is powered from the respective Class 1E division as shown on Figure 2.15.5e. In the R/B Safety-Related Equipment HVAC System, independence is provided between Class 1E divisions, and also between the Class 1E divisions and non-Class 1E equipment.

Each mechanical division (Divisions A, B, C) of the R/B Safety-Related Equipment HVAC System is physically separated from the other divisions.

The R/B Safety-Related Equipment HVAC System has the following displays and controls in the main control room:

(1) Controls and status indication for the FCUs shown on Figure 2.15.5e.

The safety-related electrical equipment shown on Figure 2.15.5e located in the Reactor Building is qualified for a harsh environment.

R/B Safety-Related Electrical Equipment HVAC System

The R/B Safety-Related Electrical Equipment HVAC System provides cooling of safety-related electrical equipment areas, and consists of three independent divisions. Each division consists of an air conditioning unit with two supply fans, and two exhaust fans. Figures 2.15.5f, 2.15.5g, and 2.15.5h show the basic system configuration and scope.

The R/B Safety-Related Electrical Equipment HVAC System is classified as safety-related.

Normal Operating Mode

In the normal operating mode, the air conditioning unit, one supply fan, and one exhaust fan of each division operate. The exhaust fan automatically starts when the supply fan is started.

In the areas served by the R/B Safety-Related Electrical Equipment HVAC System temperature is maintained below 40°C, except in the diesel generator (DG) engine rooms during DG operation.

Smoke Removal Mode

The smoke removal mode is manually initiated by closing the recirculation damper, stopping the exhaust fan, opening the exhaust fan bypass damper to allow outside air purging of the affected area, and starting the smoke removal fan in conjunction with the supply fan. The normal operating mode is used to remove smoke from the DG day tank rooms.

The R/B Safety-Related Electrical Equipment HVAC System is classified as Seismic Category I. The R/B Safety-Related Electrical Equipment HVAC System is located in the Reactor Building.

Each of the three divisions of the R/B Safety-Related Electrical Equipment HVAC System is powered from the respective Class 1E division as shown on Figures 2.15.5f, 2.15.5g, and 2.15.5h. In the R/B Safety-Related Electrical Equipment HVAC System, independence is provided between Class 1E divisions, and also between the Class 1E divisions and non-Class 1E equipment.

Each mechanical division of the R/B Safety-Related Electrical Equipment HVAC System (Divisions A, B, C) is physically separated from the other divisions.

Fire dampers with fusible links in HVAC duct work close under air flow conditions.

The R/B Safety-Related Electrical Equipment HVAC System has the following displays and controls in the main control rooms:

(1) Controls and status indication for the active safety-related components shown on Figures 2.15.5f, 2.15.5g, and 2.15.5h.

(2) Parameter displays for the instruments shown on Figures 2.15.5f, 2.15.5g and 2.15.5h.

R/B Safety-Related Diesel Generator HVAC System

The R/B Safety-Related DG HVAC System provides ventilation for the DG rooms when the DGs operate, and consists of three independent divisions. Each division consists of a filter unit and two supply fans. Figure 2.15.5i shows the basic system configuration and scope.

The R/B Safety-Related DG HVAC System is classified as safety-related.

On receipt of a DG start signal, both DG supply fans start. When the DG is operating, the R/B Safety-Related DG HVAC System and the R/B Safety-Related Electrical Equipment HVAC System maintain the temperature below 50°C.

The R/B Safety-Related DG HVAC System is classified as Seismic Category I. The R/B Safety-Related DG HVAC System is located in the Reactor Building.

Each of the three divisions of the R/B Safety-Related DG HVAC System is powered from the respective Class 1E division as shown on Figure 2.15.5i. In the R/B Safety-Related DG HVAC System, independence is provided between Class 1E divisions, and also between the Class 1E divisions and non-Class 1E equipment.

Each mechanical division of the R/B Safety-Related DG HVAC System (Divisions A, B, C) is physically separated from the other divisions.

The R/B Safety-Related DG HVAC System has the following displays and controls in the main control room:

(1) Controls and status indication for the active safety-related components shown on Figure 2.15.5i.

R/B Secondary Containment HVAC System

The R/B Secondary Containment HVAC System provides heating and cooling for the secondary containment. Figure 2.15.5j shows the basic system configuration and scope.

Except for the secondary containment isolation dampers, the R/B Secondary Containment HVAC System is classified as non-safety-related.

Normal Operating Mode

In the normal operating mode, two supply fans and two exhaust fans operate. The supply fans operate only when the exhaust fans are operating.

The R/B Secondary Containment HVAC System maintains a negative pressure in the secondary containment relative to the outside atmosphere.

The R/B Secondary Containment HVAC System isolation dampers are closed upon receipt of an isolation signal from the Leak Detection System (LDS) or a signal indicating loss of secondary containment supply and exhaust fans.

Smoke Removal Mode

The smoke removal mode is manually initiated by starting the standby exhaust and supply fans, opening the exhaust filter unit bypass dampers, and partially closing exhaust dampers for divisions not affected by fire.

The R/B Secondary Containment HVAC System penetrations of secondary containment and isolation dampers are classified as Seismic Category I. The R/B Secondary Containment HVAC System is located in the Reactor Building, except for some of the R/B secondary containment HVAC supply and exhaust air components which are located in the Turbine Building.

Each R/B Secondary Containment HVAC System isolation damper requiring electrical power is powered from the Class 1E division, as shown on Figure 2.15.5j. In the R/B Secondary Containment HVAC System, independence is provided between Class 1E divisions, and also between Class 1E divisions and non-Class 1E equipment.

Fire dampers with fusible links in HVAC duct work close under air flow conditions.

The R/B Secondary Containment HVAC System has the following displays and controls in the main control room:

(1) Control and status indication for the active components shown on Figure 2.15.5j.

(2) Parameter displays for the instruments shown on Figure 2.15.5j.

The exhaust duct secondary containment isolation dampers are located in the secondary containment and qualified for a harsh environment.

The pneumatically-operated secondary containment isolation dampers, shown on Figure 2.15.5j, fail to the closed position in the event of loss of pneumatic pressure or loss of electrical power to the valve actuating solenoids.

R/B Primary Containment Supply/Exhaust System

The R/B Primary Containment Supply/Exhaust System removes inert atmosphere and provides air for primary containment prior to personnel entry, and consists of a supply fan, a filter unit, and an exhaust fan as shown on Figure 2.15.5j.

The R/B Primary Containment Supply/Exhaust System is classified as non-safety-related. The R/B Primary Containment Supply/Exhaust System is located in the secondary containment

R/B Main Steam Tunnel HVAC System

The R/B Main Steam Tunnel HVAC System provides cooling to the main steam tunnel and consists of two FCUs. Each FCU has two fans. The FCUs are started manually.

The R/B Main Steam Tunnel HVAC System is classified as non-safety-related. The R/B Main Steam Tunnel HVAC System is located in the Reactor Building.

R/B Non-Safety-Related Equipment HVAC System

The R/B Non-Safety-Related Equipment HVAC System provides cooling to the non-safety-related equipment rooms. There are six air handling units in the system. Each consists of a cooling coil, fan(s), and filter, as required.

The R/B Non-Safety-Related Equipment HVAC System is classified as non-safety-related, and is located in the Reactor Building.

Reactor Internal Pump ASD HVAC System

The Reactor Internal Pump ASD HVAC System provides cooling to the RIP ASD power panels. The system consists of a two recirculating air conditioning units with cooling coils and four supply fans.

The RIP ASD HVAC System is classified as non-safety-related, and is located in the Reactor Building.

Turbine Island HVAC System

The Turbine Island HVAC System provides heating, cooling, and ventilation for the Turbine Island. The Turbine Island HVAC System consists of the following non-safety-related systems.

(1) Turbine Building (T/B) HVAC System.

(2) Electrical Building (E/B) HVAC System.

Turbine Building (T/B) HVAC System

The T/B HVAC System provides cooling and ventilation for the Turbine Building. The T/B HVAC System consists of:

(1) T/B supply system with an air conditioning unit and three supply fans.

(2) T/B exhaust system with three exhaust fans.

(3) T/B compartment exhaust system with two exhaust fans.

(4) T/B lube oil area exhaust system with two fans.

(5) T/B unit coolers and electric unit heaters.

The T/B HVAC System is classified as non-safety-related. The T/B HVAC System is located in the Turbine Building.

Electrical Building (E/B) HVAC System

The E/B HVAC System provides cooling and ventilation for the electrical equipment rooms. The system consists of two air conditioning units, supply fans, two exhaust fans, unit coolers and electric unit heaters.

The E/B HVAC System is classified as non-safety-related. The E/B HVAC System is located in the Electrical Building of the Turbine Island.

Radwaste Building HVAC System

The Radwaste Building HVAC System provides a controlled environment for personnel comfort and safety for the Radwaste Building areas. The system consists of:

(1) An air conditioning unit and two supply fans for the Radwaste Building control room

(2) An air conditioning unit with, two supply fans, and three exhaust fans for the process areas of the Radwaste Building.

The Radwaste Building HVAC System is classified as non-safety-related, and is located in the Radwaste Building.

Service Building HVAC System

The Service Building (S/B) HVAC System provides controlled environment for personnel comfort in the S/B.

The S/B HVAC System consists of two non-safety-related systems:

(1) Clean Area HVAC System.

(2) Controlled Area HVAC System.

The S/B HVAC System is classified as non-safety-related, and is located in the Service Building.

Clean Area HVAC System

The Clean Area HVAC System provides a controlled environment for personnel comfort and safety in the Clean Area for the duration of a design basis accident. The system consists of an air conditioning unit with two supply fans, two exhaust fans, and an emergency filtration unit with two circulating fans. The emergency filtration unit has at least 95% removal efficiency for all forms of iodine (elemental, organic, particulate, and hydrogen iodide) from the influent system.

Toxic gas monitors may be required in the outside air intake of the Clean Area HVAC System; these sensors are not in the Certified Design.

The Clean Area HVAC System is classified as non-safety-related. The Clean Area HVAC System is located in the S/B. The Clean Area HVAC System of the S/B serves the Technical Support Center (TSC) the Operational Support Center (OSC) and other clean areas inside the S/B.

On receipt of a signal from the TSC or main control room (MCR), the normal air intake damper closes, the minimum outside air intake damper opens and the ventilation air for the Clean Area is routed through the emergency filtration unit.

In the high radiation mode, a positive pressure is maintained in the Clean Area relative to the outside atmosphere.

Interface Requirements

Toxic gas monitors will be located in the outside air intakes of the Clean Area HVAC System, if the site is adjacent to toxic gas sources with the potential for releases of significance to plant operating personnel in the Clean Area. These monitors shall have the following requirements:

(1) Be located in the outside air intake of the Clean Area HVAC System.

(2) Be capable of detecting toxic gas concentrations at which personnel protective actions must be initiated.

Controlled Area HVAC System

The Controlled Area HVAC System serves the controlled access area, excluding the clean areas, and it consists of two exhaust fans. The Controlled Area HVAC System obtains its supply air from the Clean Area HVAC System. The Controlled Area HVAC System is located in the Service Building.

Inspections, Tests, Analyses and Acceptance Criteria

For portions of the CRHA HVAC system within the Certified Design, Table 2.15.5a provides a definition of the inspections, tests, and/or analyses, together with associated acceptance criteria, which will be undertaken for the CRHA HVAC Systems.

Table 2.15.5b provides a definition of the inspections, tests and/or analyses, together with associated acceptance criteria which will be under taken for the Control Building Safety-Related Equipment Area HVAC System.

Table 2.15.5c provides a definition of the inspections, tests, and/or analyses, together with associated acceptance criteria, which will be undertaken for the Reactor Building Safety-Related Equipment HVAC System.

Table 2.15.5d provides a definition of the inspections, tests, and/or analyses, together with associated acceptance criteria, which will be undertaken for the Reactor Building Safety-Related Electrical Equipment HVAC System.

Table 2.15.5e provides a definition of the inspections, tests, and/or analyses, together with associated acceptance criteria, which will be undertaken for the Reactor Building Safety-Related DG HVAC System.

Table 2.15.5f provides a definition of the inspections, tests, and/or analyses, together with associated acceptance criteria, which will be undertaken for the Reactor Building Secondary Containment HVAC System.

Table 2.15.5g provides a definition of the inspections, tests, and/or analyses, together with associated acceptance criteria, which will be undertaken for the Reactor Building Primary Containment Supply/Exhaust System.

Table 2.15.5h provides a definition of the inspections, tests, and/or analyses, together with associated acceptance criteria, which will be undertaken for the Reactor Building Main Steam Tunnel HVAC System.

Table 2.15.5i provides a definition of the inspections, tests, and/or analyses, together with associated acceptance criteria, which will be undertaken for the Reactor Building Non-Safety-Related Equipment HVAC System.

Table 2.15.5j provides a definition of the inspections, tests, and/or analyses, together with associated acceptance criteria, which will be undertaken for the Reactor Internal Pump ASD HVAC System.

Table 2.15.5k provides a definition of the inspections, tests, and/or analyses, together with associated acceptance criteria, which will be undertaken for the Turbine Island HVAC System.

Table 2.15.5l provides a definition of the inspections, tests, and/or analyses, together with associated acceptance criteria, which will be undertaken for the Radwaste Building HVAC System.

Table 2.15.5m provides a definition of the inspections, tests, and/or analyses, together with associated acceptance criteria, which will be undertaken for the Service Building HVAC System.

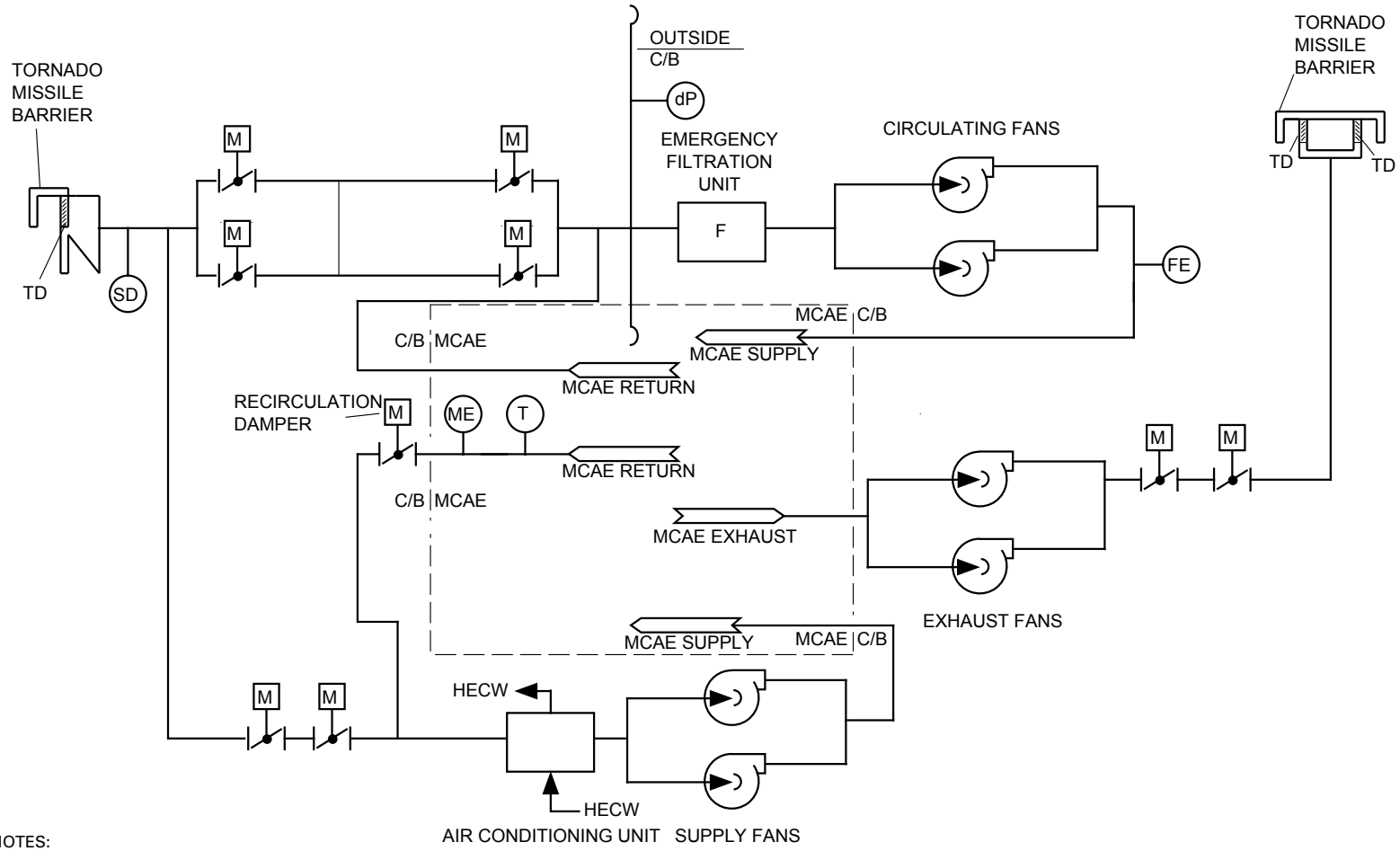

NOTES:

1. THIS FIGURE SHOWS ONE OF TWO IDENTICAL DIVISIONS. ELECTRICAL POWER LOADS FOR THE COMPONENTS OF DIVISION B EXCEPT MOTOR OPERATED ISOLATION DAMPERS ARE POWERED FROM CLASS 1E DIVISION II. ELECTRICAL POWER LOADS FOR THE COMPONENTS OF DIVISION C EXCEPT MOTOR OPERATED ISOLATION DAMPERS ARE POWERED FROM CLASS 1E DIVISION III.

2. EACH PAIR OF MOTOR OPERATED ISOLATION DAMPERS HAS ONE DAMPER POWERED FROM CLASS 1E DIVISION II AND THE OTHER DAMPER FROM CLASS 1E DIVISION III

Figure 2.15.5a Control Room Habitability Area HVAC System

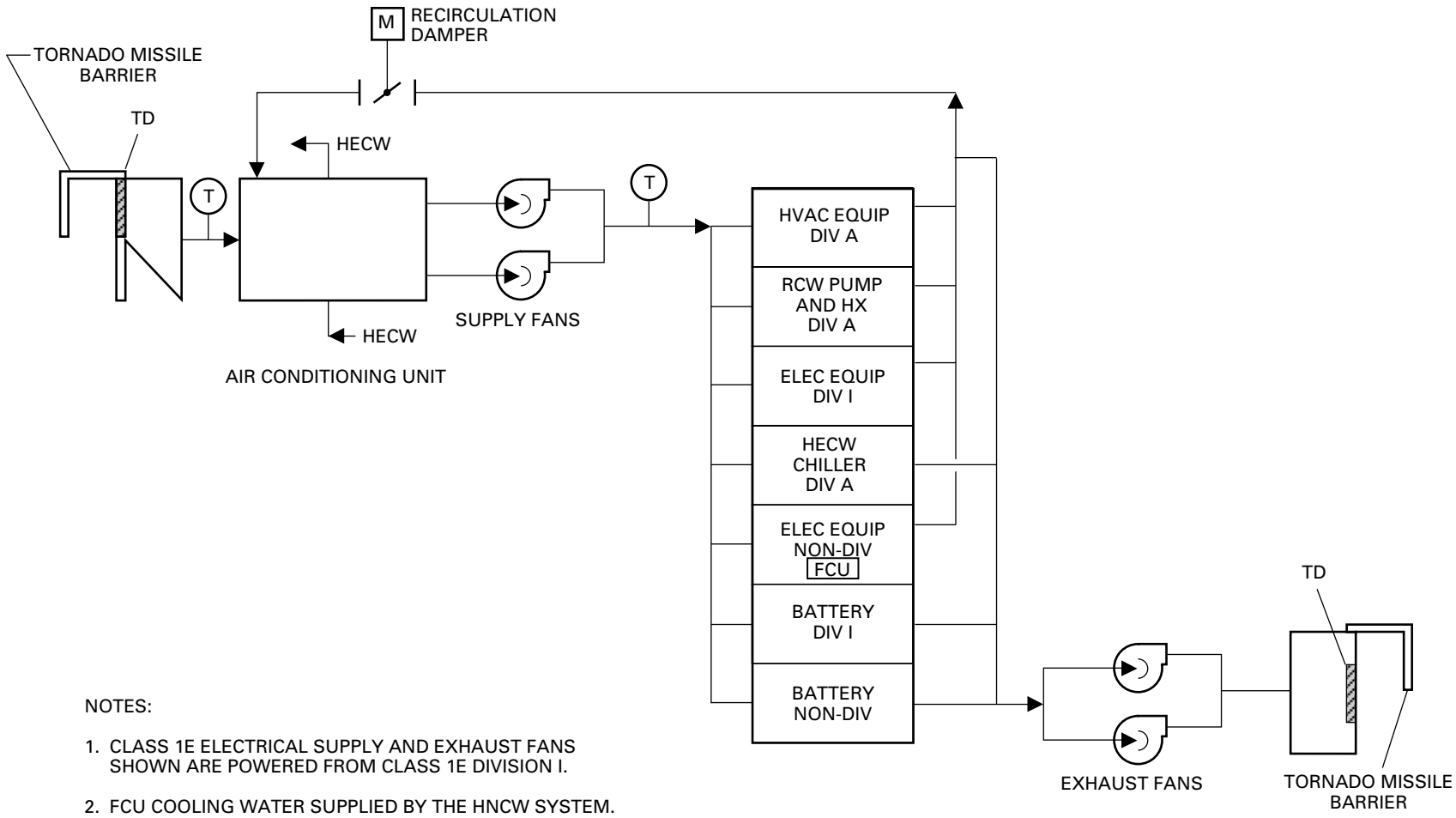

NOTES:

1. CLASS 1E ELECTRICAL SUPPLY AND EXHAUST FANS SHOWN ARE POWERED FROM CLASS 1E DIVISION I.
2. FCU COOLING WATER SUPPLIED BY THE HNCW SYSTEM.

Figure 2.15.5b Control Building Safety-Related Equipment Area HVAC System (Division A)

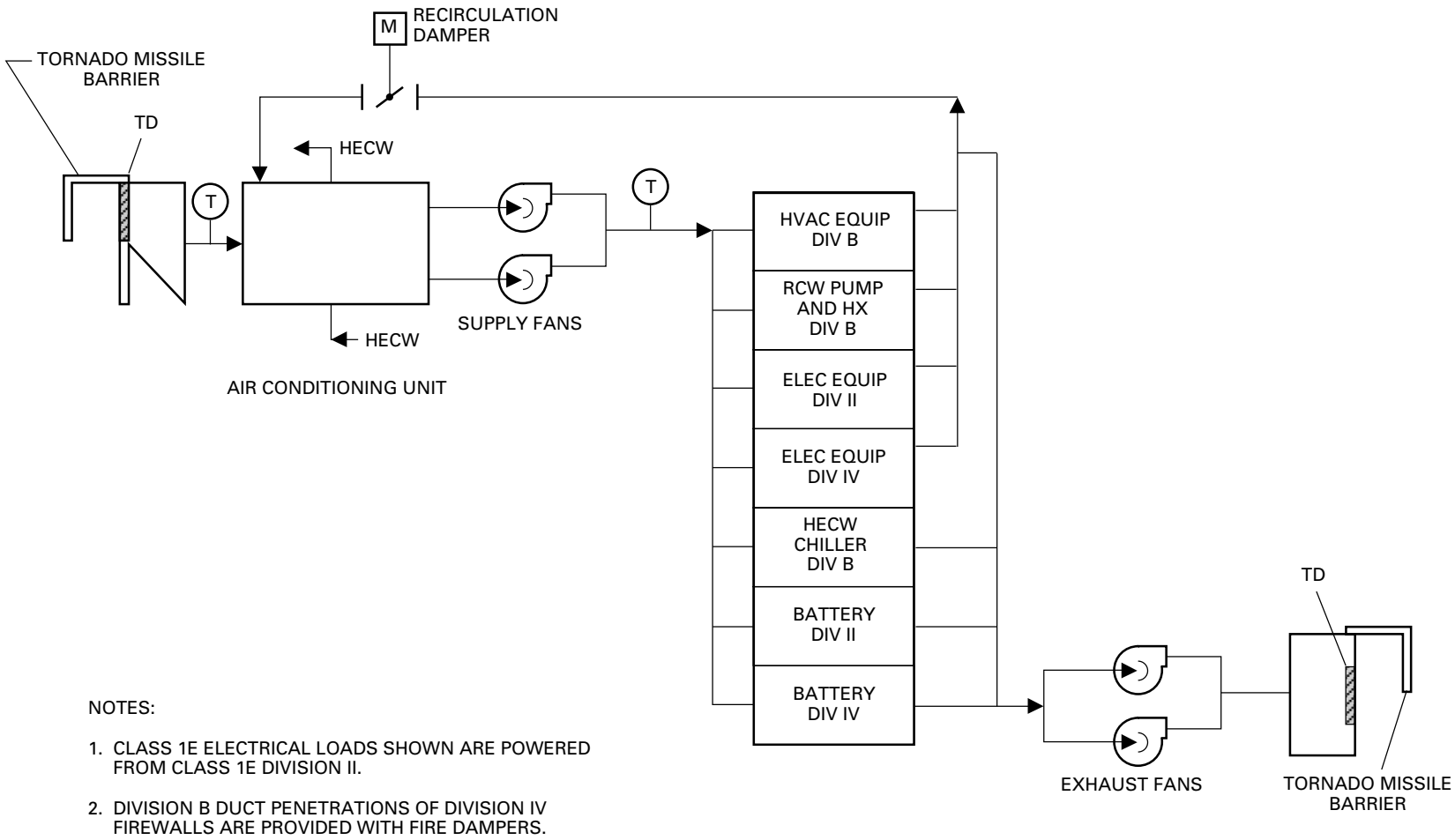

NOTES:

1. CLASS 1E ELECTRICAL LOADS SHOWN ARE POWERED FROM CLASS 1E DIVISION II.
2. DIVISION B DUCT PENETRATIONS OF DIVISION IV FIREWALLS ARE PROVIDED WITH FIRE DAMPERS.

Figure 2.15.5c Control Building Safety-Related Equipment Area HVAC System (Division B)

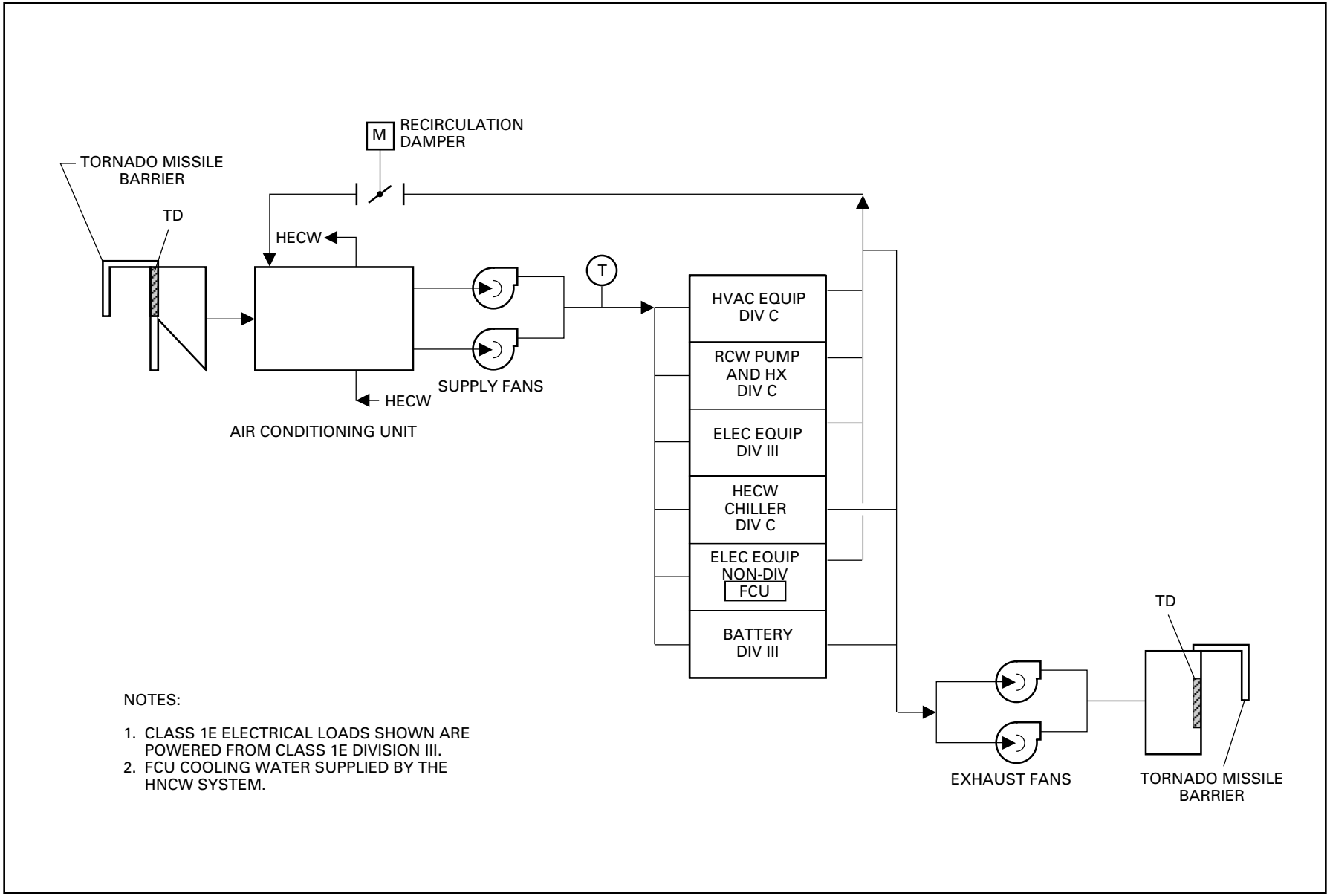

Figure 2.15.5d Control Building Safety-Related Equipment Area HVAC System (Division C)

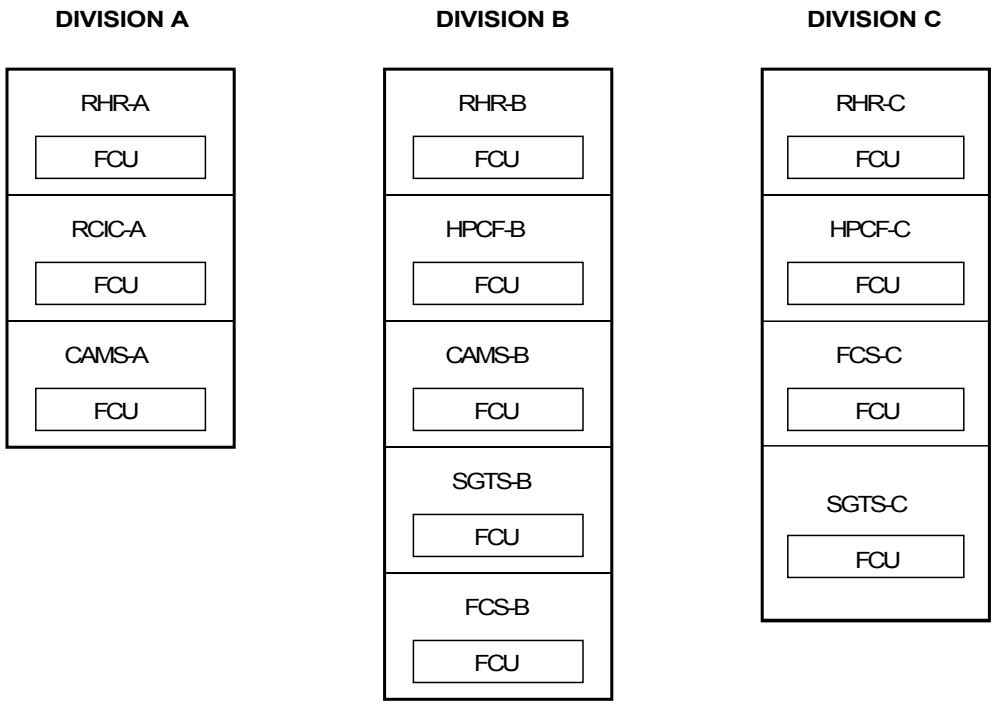

NOTES:

1. FCU COOLING WATER IS SUPPLIED BY THE RCW SYSTEM.
2. NORMAL VENTILATION AND SMOKE REMOVAL IS PROVIDED BY THE R/B SECONDARY CONTAINMENT HVAC SYSTEM.
3. ELECTRICAL POWER LOADS FROM DIVISIONS A, B, AND C ARE POWERED FROM CLASS 1E DIVISIONS I, II, AND III, RESPECTIVELY.

Figure 2.15.5e Reactor Building Safety-Related Equipment HVAC System

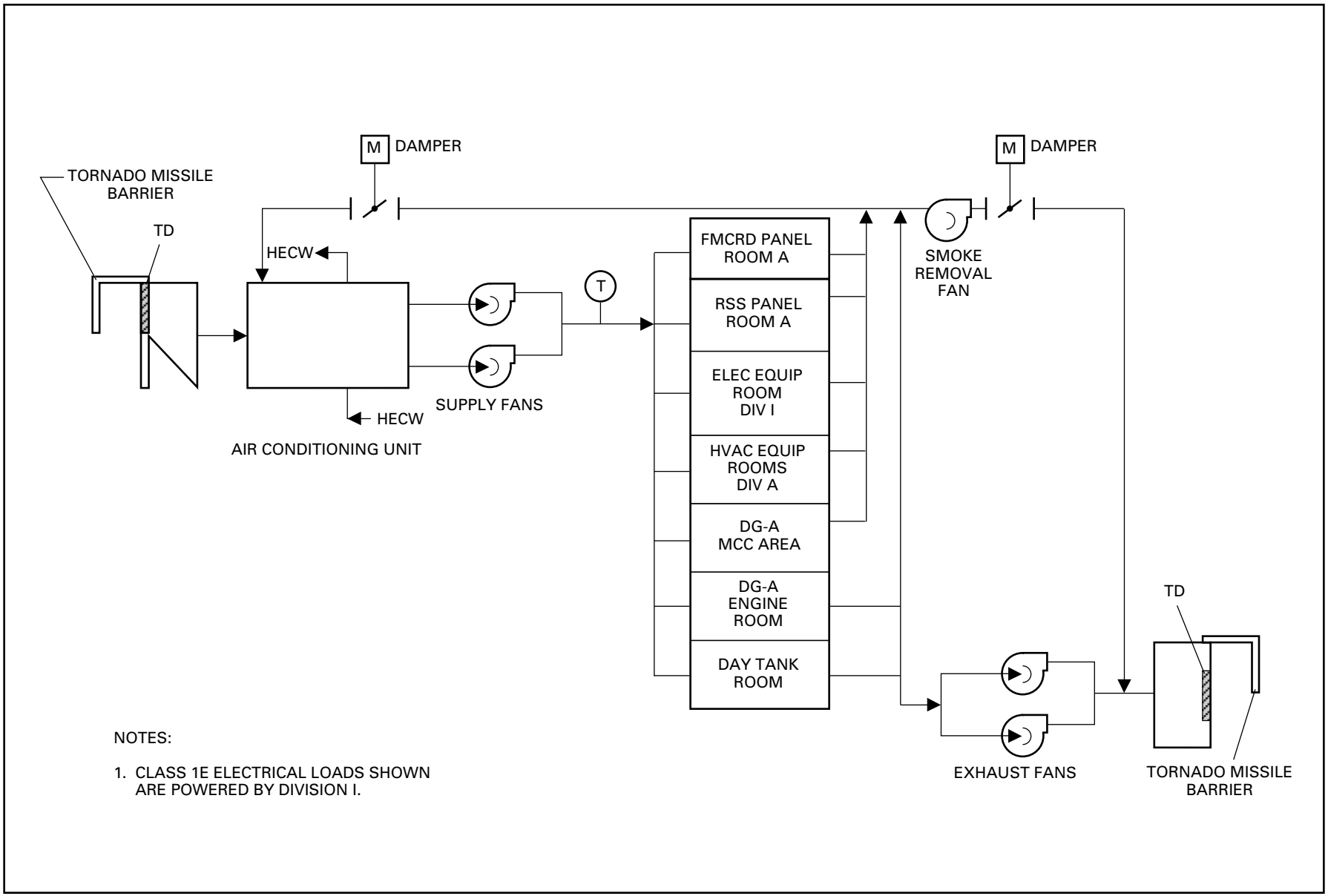

Figure 2.15.5f Reactor Building Safety-Related Electrical Equipment HVAC System (Division A)

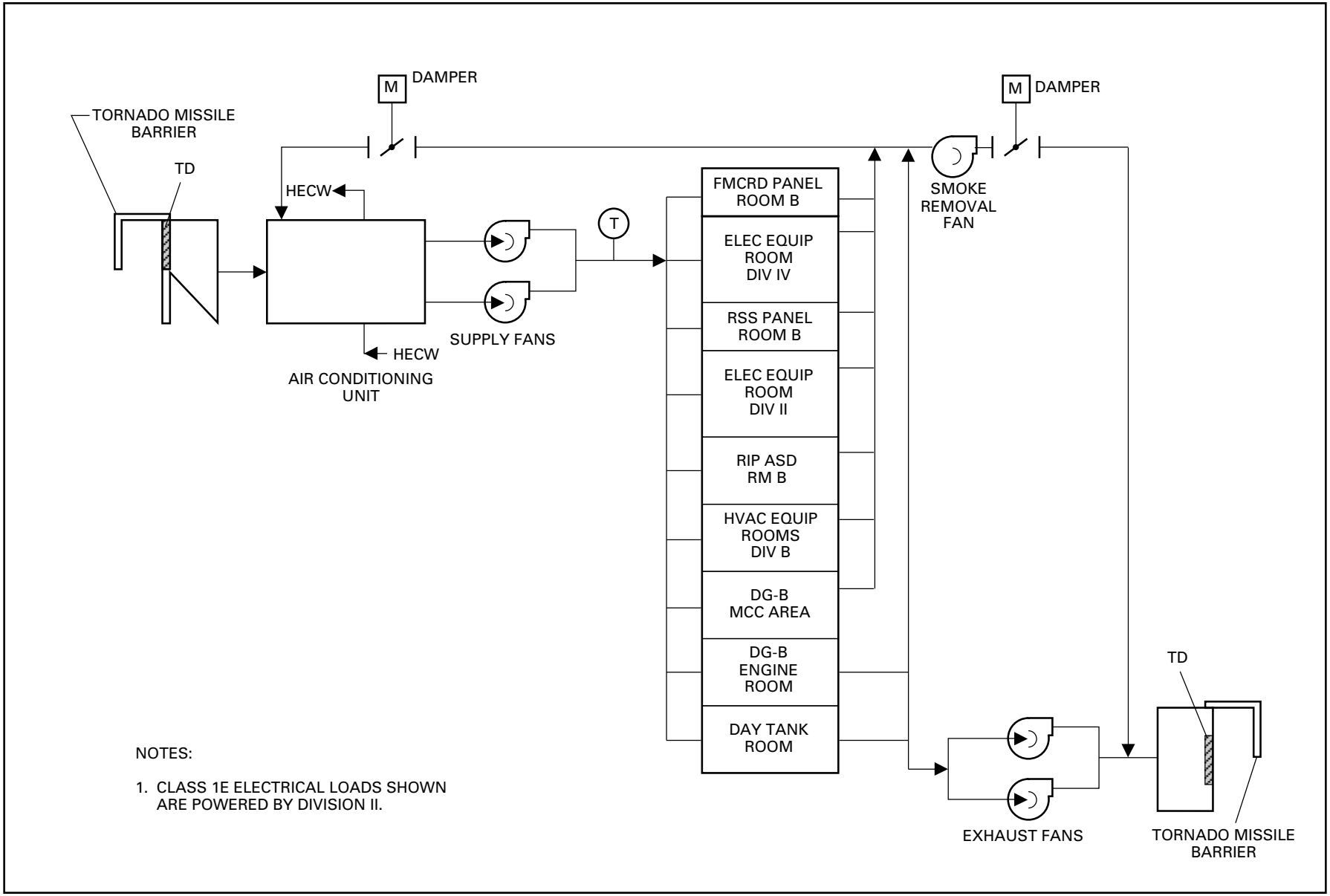

Figure 2.15.5g Reactor Building Safety-Related Electrical Equipment HVAC System (Division B)

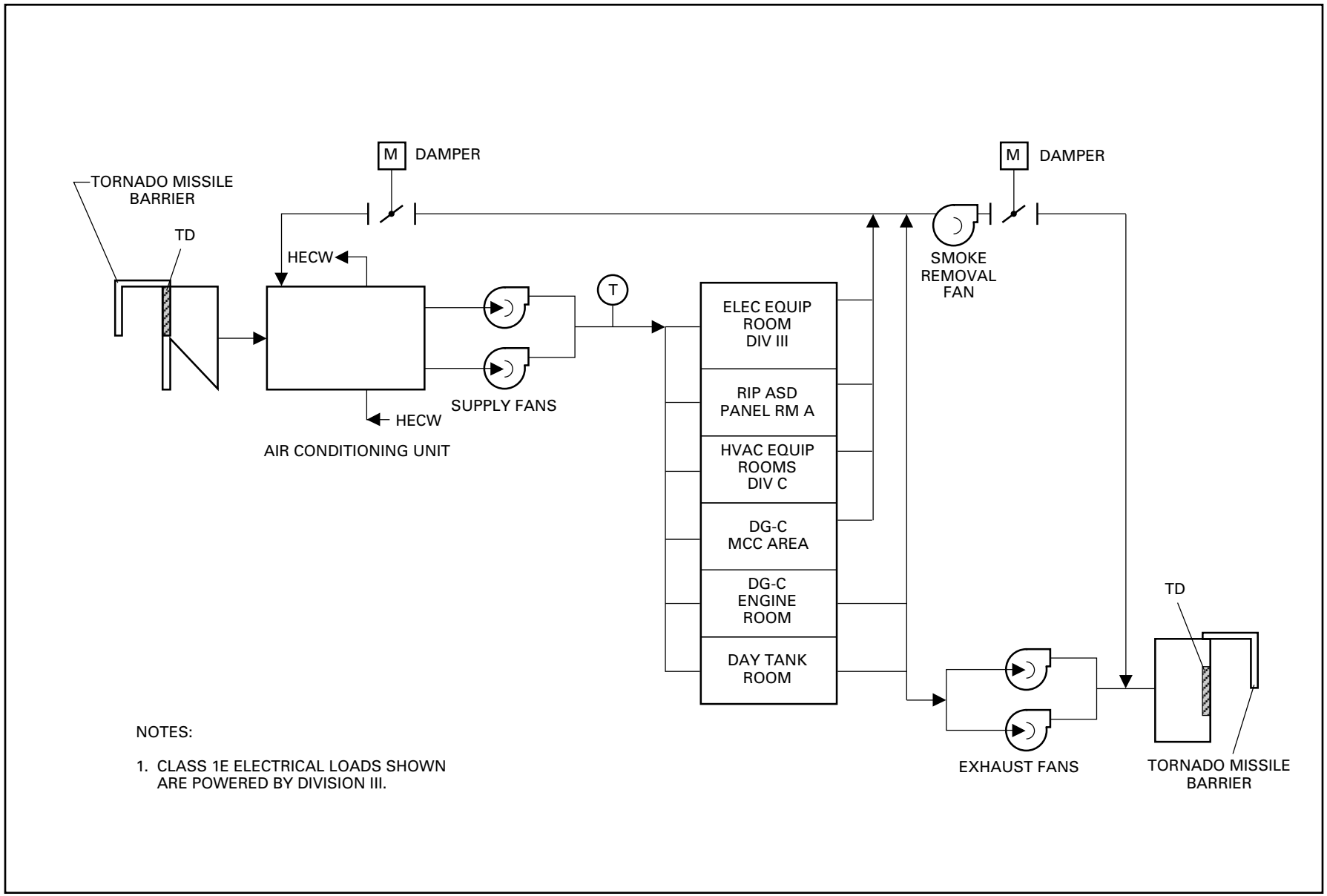

Figure 2.15.5h Reactor Building Safety-Related Electrical Equipment HVAC System (Division C)

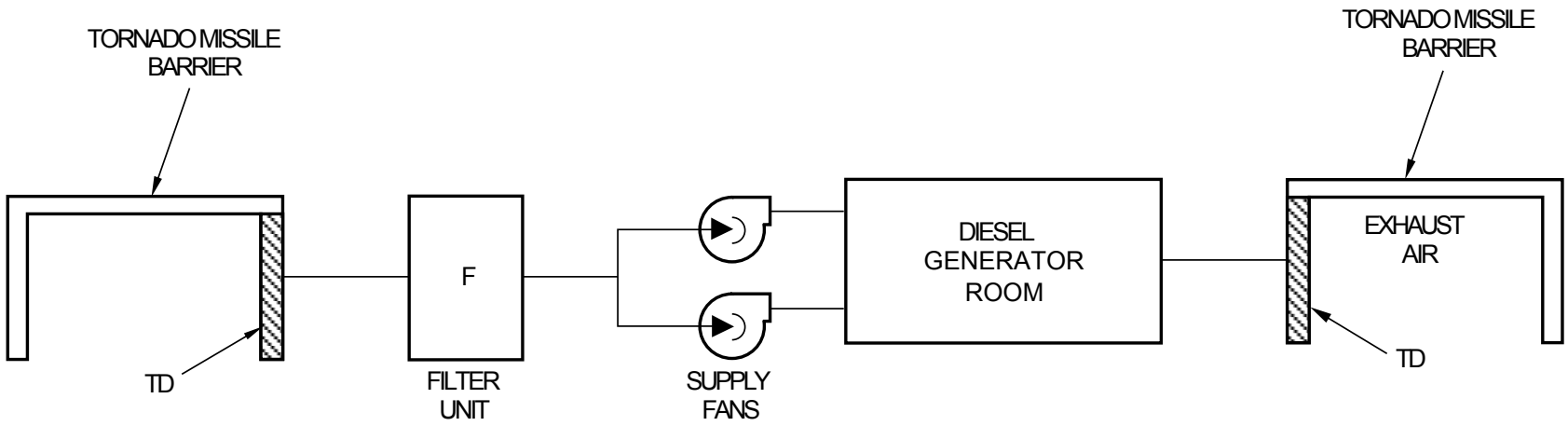

NOTES:

1. THIS FIGURE SHOWS ONE OF THREE IDENTICAL DIVISIONS. ELECTRICAL POWER LOADS FOR DIVISIONS A, B, AND C ARE POWERED FROM CLASS 1E DIVISIONS I, II, AND III, RESPECTIVELY.

Figure 2.15.5i Reactor Building Safety-Related Diesel Generator HVAC System

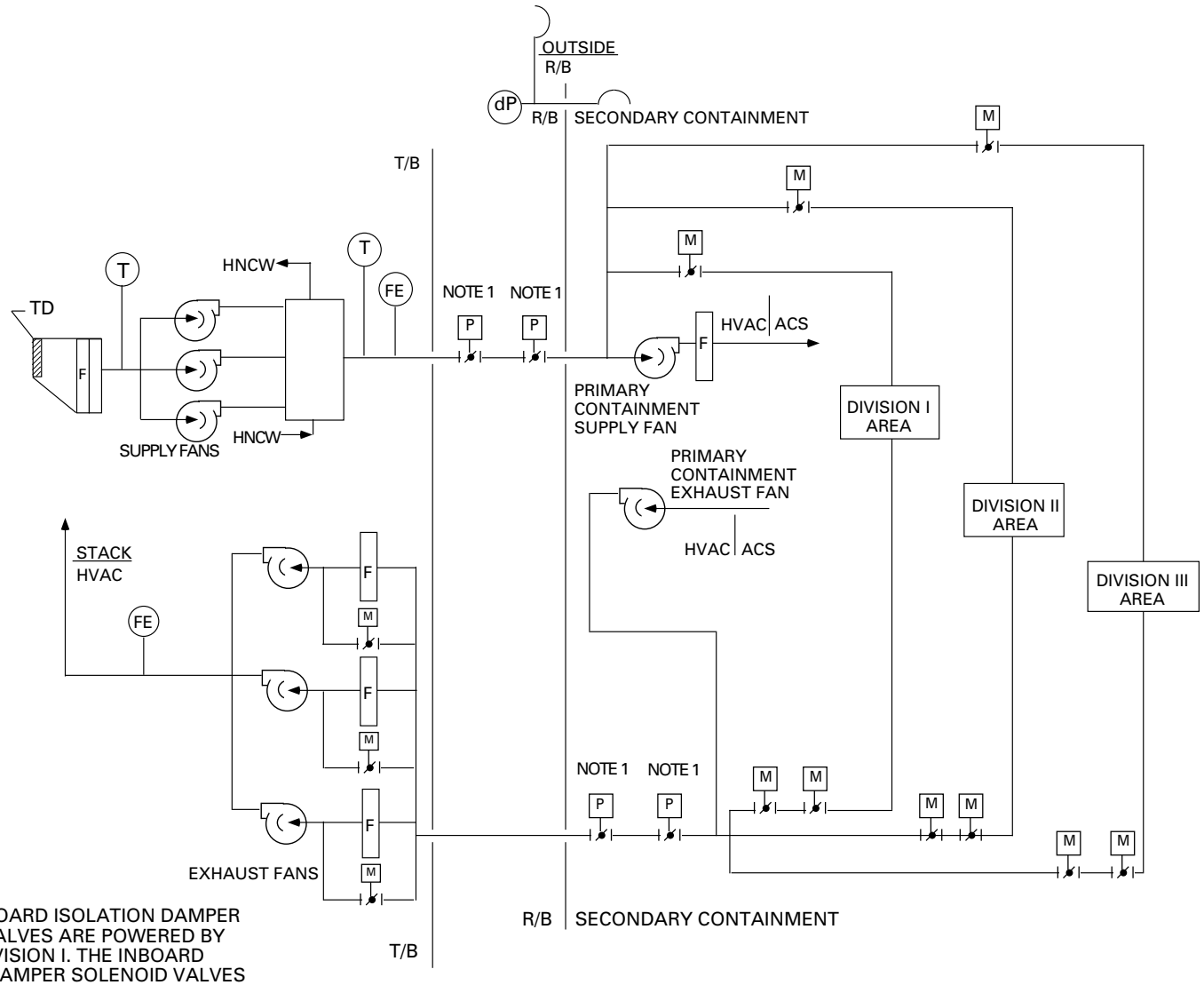

NOTES:
1. THE OUTBOARD ISOLATION DAMPER SOLENOID VALVES ARE POWERED BY CLASS 1E DIVISION I. THE INBOARD ISOLATION DAMPER SOLENOID VALVES ARE POWERED BY CLASS 1E DIVISION II.

Figure 2.15.5j Reactor Building Secondary Containment HVAC System

Table 2.15.5a Control Room Habitability Area HVAC System

Inspections, Tests, Analyses and Acceptance Criteria		
Design Commitment	**Inspections, Tests, Analyses**	**Acceptance Criteria**
1. The basic configuration of the CRHA HVAC System is as shown on Figure 2.15.5a.	1. Inspections of the as-built system will be conducted.	1. The as-built CRHA HVAC System conforms with the basic configuration shown on Figure 2.15.5a.
2. The emergency filtration unit have at least 99% removal efficiency for all forms of iodine (elemental organic, particulate, and hydrogen iodide).	2. a. Test will be conducted on each as-built emergency filtration unit. b. Tests in a test facility will be conducted on the iodine absorber material.	2. The emergency filtration unit iodine removal efficiency is at least 99%.
3. The exhaust fan automatically starts when the supply fan is started.	3. Tests will be conducted on each division of the CRHA HVAC System by starting the supply fan.	3. The exhaust fan automatically starts when the supply fan is started.
4. The MCAE is maintained at a minimum pressure of 3.2 mm water gauge above the outside atmosphere.	4. Tests will be conducted on the as-built CRHA HVAC System in the normal mode of operation.	4. The MCAE is maintained at a minimum pressure of 3.2 mm water gauge above the outside atmosphere.
5. a. On receipt of a PRM System signal for high radiation in the outside air intake of the operating division, the normal outside air intake dampers close, the exhaust air dampers close, the exhaust fan stops, the minimum outside air intake dampers open, and one fan of the emergency filtration unit starts.	5. a. Tests will be conducted on each CRHA HVAC System division using a simulated initiation signal.	5. a. Upon receipt of a simulated initiation signal the following occurs: (1) Normal outside air intake dampers are closed. (2) Exhaust air dampers are closed. (3) Exhaust fan is stopped. (4) Minimum outside air intake dampers are opened. (5) Emergency filtration unit fan is started.

Table 2.15.5a Control Room Habitability Area HVAC System (Continued)

Inspections, Tests, Analyses and Acceptance Criteria		
Design Commitment	**Inspections, Tests, Analyses**	**Acceptance Criteria**
b. In the high radiation mode, positive pressure of at least 3.2 mm water gauge is maintained in the MCAE relative to the outside atmosphere. Each emergency filtration unit treats a mixture of MCAE recirculated air and outside makeup air to maintain the positive pressure with not more than 3400 m^3/h (@ one atmosphere absolute pressure, 0°C) of outside air.	b. Tests will be conducted on each division of the as-built CRHA HVAC System in the high radiation mode.	b. The MCAE is maintained at a positive pressure of at least 3.2 mm water gauge relative to the outside atmosphere with outside makeup air of not more than 3400 m^3/h (@ one atmosphere absolute pressure, 0°C).
c. The redundant division of the CRHA HVAC System starts on a low flow signal from the operating emergency filtration unit.	c. Tests will be conducted on each division of the as-built CRHA HVAC System using simulated low flow signals.	c. The redundant division of the CRHA HVAC System starts on a low flow signal from the operating emergency filtration unit.
d. The redundant division of the CRHA HVAC System is connected to an outside air intake which is separated from the other by a minimum of 50m.	d. Inspections will be conducted on the CRHA HVAC System.	d. The CRHA HVAC System outside air intakes are at least 50m apart.
6. When smoke detection sensors in the operating outside air intake detects smoke, a signal will initiate MCAE air recirculation by isolating the outside air intake, closing the exhaust damper, and stopping the exhaust fan.	6. Tests will be conducted on each CRHA HVAC System division using a simulated smoke signal.	6. Upon receipt of a simulated initiation signal the following occurs: a. Outside air intake dampers are closed. b. Exhaust air dampers are closed. c. Exhaust fan is stopped.

Table 2.15.5a Control Room Habitability Area HVAC System (Continued)

Inspections, Tests, Analyses and Acceptance Criteria		
Design Commitment	**Inspections, Tests, Analyses**	**Acceptance Criteria**
7. Each of the two CRHA System divisions is powered from the respective Class 1E division as shown on Figure 2.15.5a. In the CRHA HVAC System, independence is provided between Class 1E divisions, and between Class 1E divisions and non-Class 1E equipment.	7. a. Tests will be performed on the CRHA HVAC System by providing a test signal in only one Class 1E division at a time. b. Inspection of the as-built Class 1E divisions in the CRHA HVAC System will be performed.	7. a. The test signal exists only in the Class 1E division under test in the CRHA HVAC System. b. In the CRHA HVAC System, physical separation or electrical isolation exists between Class 1E divisions. Physical separation or electrical isolation exists between these Class 1E divisions and non-Class equipment.
8. Each mechanical division of the CRHA HVAC System (Division B and C) is physically separated from the other division, except for the common ducts in the MCAE.	8. Inspections of the as-built CRHA HVAC System will be performed.	8. Each mechanical division of the CRHA HVAC System is physically separated from the other mechanical division of the CRHA HVAC System by structural and/or fire barriers.
9. Fire dampers with fusible links in HVAC duct work close under air flow conditions.	9. Type tests of fire dampers in a test facility will be performed for closure under system air flow conditions.	9. Fire dampers close under system air flow conditions.
10. Main control room displays and controls provided for CRHA HVAC System are as defined in Section 2.15.5.	10. Inspections will be performed on the main control room displays and controls for the CRHA HVAC System.	10. Displays and controls exist or can be retrieved in the main control room as defined in Section 2.15.5.

Table 2.15.5b Control Building Safety-Related Equipment Area HVAC System

Inspections, Tests, Analyses and Acceptance Criteria		
Design Commitment	**Inspections, Tests, Analyses**	**Acceptance Criteria**
1. The basic configuration of the CBSREA HVAC System is as shown on Figures 2.15.5b, 2.15.5c and 2.15.5d.	1. Inspections of the as-built system will be conducted.	1. The as-built CBSREA HVAC System conforms with the basic configuration shown on Figures 2.15.5b, 2.15.5c and 2.15.5d.
2. The exhaust fan automatically starts when the supply fan is started.	2. Tests will be conducted on each division of the as-built CBSREA HVAC System by starting the supply fan.	2. The exhaust fan automatically starts when the supply fan is started.
3. Hydrogen concentration is maintained at less than 2% by volume in the battery rooms.	3. Flow tests will be conducted on each battery room served by the CBSREA HVAC System. Hydrogen concentration analyses will be performed for each battery room using measured flow rates and maximum expected battery hydrogen evolution rates.	3. Hydrogen concentration is maintained at less than 2% by volume in the battery rooms.
4. Each of the three CBSREA HVAC System divisions is powered from the respective Class 1E division as shown on Figures 2.15.5b, 2.15.5c, and 2.15.5d. In the CBSREA HVAC System, independence is provided between Class 1E divisions, and between Class 1E divisions and non-Class 1E equipment.	4. a. Tests will be performed on the CBSREA HVAC System by providing a test signal in only one Class 1E division at a time. b. Inspection of the as-built Class 1E divisions in the CBSREA HVAC System will be performed.	4. a. The test signal exists only in the Class 1E division under test in the CBSREA HVAC System. b. In the CBSREA HVAC System, physical separation or electrical isolation exists between Class 1E divisions. Physical separation or electrical isolation exists between these Class 1E divisions and non-Class 1E equipment.
5. Each mechanical division of the CBSREA HVAC System (Divisions A, B and C) is physically separated from the other divisions.	5. Inspections of the as-built CBSREA HVAC System will be conducted.	5. Each mechanical division of the CBSREA HVAC System is physically separated from the other mechanical divisions of the CBSREA HVAC System by structural and/or fire barriers.

Table 2.15.5b Control Building Safety-Related Equipment Area HVAC System (Continued)

Inspections, Tests, Analyses and Acceptance Criteria		
Design Commitment	**Inspections, Tests, Analyses**	**Acceptance Criteria**
6. Fire dampers with fusible links in HVAC duct work close under air flow conditions.	6. Type tests of fire dampers in a test facility will be performed for closure under system air flow conditions.	6. Fire dampers close under system air flow conditions.
7. Main control room displays and controls provided for CBSREA HVAC System are as defined in Section 2.15.5.	7. Inspections will be performed on the main control room displays and controls for the CBSREA HVAC System.	7. Displays and controls exist or can be retrieved in the main control room as defined in Section 2.15.5.

Table 2.15.5c Reactor Building Safety-Related Equipment HVAC System

Inspections, Tests, Analyses and Acceptance Criteria		
Design Commitment	**Inspections, Tests, Analyses**	**Acceptance Criteria**
1. The basic configuration of the R/B Safety-Related Equipment HVAC System is as shown on Figure 2.15.5e.	1. Inspections of the as-built system will be conducted.	1. The as-built R/B Safety-Related Equipment HVAC System conforms with the basic configuration as shown on Figure 2.15.5e.
2. The RHR, HPCF, and RCIC pump room FCUs are automatically initiated upon start-up of their respective room process pumps.	2. Tests will be conducted on each pump room FCU using simulated signals indicating pump start-up.	2. Each pump room FCU starts when a signal indicates start-up of their respective room process pump.
3. The CAMS and SGTS room FCUs are automatically initiated upon isolation of the R/B Secondary Containment HVAC System.	3. Tests will be conducted on each as-built safety-related FCUs using simulated signals indicative isolation of the R/B Secondary Containment HVAC System.	3. The CAMS and SGTS room FCUs are automatically initiated upon isolation of the R/B Secondary Containment HVAC System.
4. The FCS room FCUs are initiated upon a manual FCS start signal.	4. Tests will be conducted on each as-built FCS room FCU using a simulated initiation signal.	4. The FCS room FCU starts upon receipt of a signal indicating FCS start.
5. Each of the three division of the R/B Safety-Related Equipment HVAC System is powered from the respective Class 1E division as shown on Figure 2.15.5e. In the R/B Safety-Related Equipment HVAC System, independence is provided between Class 1E divisions, and between Class 1E divisions and non-Class 1E equipment.	5. a. Tests will be performed on the R/B Safety-Related Equipment HVAC System by providing a test signal in only one Class 1E division at a time. b. Inspection of the as-built Class 1E divisions in the R/B Safety-Related Equipment HVAC System will be performed.	5. a. The test signal exists only in the Class 1E division under test in the in the R/B Safety-Related Equipment HVAC System. b. In the R/B Safety-Related Equipment HVAC System, physical separation or electrical isolation exists between Class 1E divisions. Physical separation or electrical isolation exists between these Class 1E divisions and non-class 1E equipment.

Table 2.15.5c Reactor Building Safety-Related Equipment HVAC System (Continued)

Inspections, Tests, Analyses and Acceptance Criteria		
Design Commitment	**Inspections, Tests, Analyses**	**Acceptance Criteria**
6. Each mechanical division (Divisions A, B, C) of the R/B Safety-Related Equipment HVAC System is physically separated from the other divisions.	6. Inspections of the as-built R/B Safety-Related Equipment HVAC System will be conducted.	6. Each mechanical division of the R/B Safety-Related Equipment HVAC System is physically separated from the other mechanical divisions of the R/B Safety-Related Equipment HVAC System by structural and/or fire barriers.
7. Main control room displays and controls provided for the R/B Safety-Related Equipment HVAC System are as defined in Section 2.15.5.	7. Inspections will be performed on the main control room displays and controls for the R/B Safety-Related Equipment HVAC System.	7. Displays and controls exist or can be retrieved in the main control room as defined in Section 2.15.5.

Table 2.15.5d Reactor Building Safety-Related Electrical Equipment HVAC System

Inspections, Tests, Analyses and Acceptance Criteria		
Design Commitment	**Inspections, Tests, Analyses**	**Acceptance Criteria**
1. The basic configuration of the R/B Safety-Related Electrical Equipment HVAC System is as shown on Figures 2.15.5f, 2.15.5g, and 2.15.5h.	1. Inspections of the as-built system will be conducted.	1. The as-built R/B Safety-Related Electrical Equipment HVAC System conforms with the basic configuration shown on Figures 2.15.5f, 2.15.5g, and 2.15.5h.
2. The exhaust fan automatically starts when the supply fan is started.	2. Tests will be conducted on each division of the as-built R/B Safety-Related Electrical Equipment HVAC System by starting the supply fan.	2. The exhaust fan automatically starts when the supply fan is started.
3. Each of the three division of the R/B Safety-Related Electrical Equipment HVAC System is powered from the respective Class 1E division as shown on Figures 2.15.5f, 2.15.5g, and 2.15.5h. In the R/B safety-related electrical equipment HVAC system, independence is provided between Class 1E divisions, and between Class 1E divisions and non-Class 1E equipment.	3. a. Tests will be performed on the R/B Safety-Related Electrical Equipment HVAC System by providing a test signal in only one Class 1E division at a time. b. Inspection of the as-built Class 1E divisions in the R/B Safety-Related Electrical Equipment HVAC System will be performed.	3. a. The test signal exists only in the Class 1E division under test in the R/B Safety-Related Electrical Equipment HVAC System. b. In the R/B Safety-Related Electrical Equipment HVAC System, physical separation or electrical isolation exists between Class 1E divisions. Physical separation or electrical isolation exists between these Class 1E divisions and non-Class 1E equipment.
4. Each mechanical division of the R/B Safety-Related Electrical Equipment HVAC System (Divisions A, B, and C) is physically separated from the other divisions.	4. Inspections of the as-built R/B Safety-Related Electrical Equipment HVAC System will be conducted.	4. Each mechanical division of the R/B Safety-Related Electrical Equipment HVAC System is physically separated from the other mechanical divisions of the R/B Safety-Related Electrical Equipment HVAC System by structural and/or fire barriers.
5. Fire dampers with fusible links in HVAC duct work close under air flow conditions.	5. Type tests of fire dampers in a test facility will be performed for closure under system air flow conditions.	5. Fire dampers close under system air flow conditions.

Table 2.15.5d Reactor Building Safety-Related Electrical Equipment HVAC System (Continued)

Inspections, Tests, Analyses and Acceptance Criteria		
Design Commitment	**Inspections, Tests, Analyses**	**Acceptance Criteria**
6. Main control room displays and controls provided for R/B Safety-Related Electrical Equipment HVAC System are as defined in Section 2.15.5.	6. Inspections will be performed on the main control room displays and controls for the R/B Safety-Related Electrical Equipment HVAC System.	6. Displays and controls exist or can be retrieved in the main control room as defined in Section 2.15.5.

Table 2.15.5e Reactor Building Safety-Related Diesel Generator HVAC System

Inspections, Tests, Analyses and Acceptance Criteria		
Design Commitment	**Inspections, Tests, Analyses**	**Acceptance Criteria**
1. The basic configuration of the R/B Safety-Related DG HVAC System is as shown on Figure 2.15.5i.	1. Inspections of the as-built system will be conducted.	1. The as-built R/B Safety-Related DG HVAC System conforms with the basic configuration shown on Figure 2.15.5i.
2. On receipt of a DG start signal, both DG supply fans start.	2. Tests will be conducted on each division of the as-built R/B Safety-Related DG HVAC System using a simulated DG start signal.	2. On receipt of a DG start signal, both DG supply fans start.
3. Each of the three divisions of the R/B Safety-Related DG HVAC System is powered from the respective Class 1E division as shown on Figure 2.15.5i. In the R/B safety-related DG HVAC system, independence is provided between Class 1E divisions, and between Class 1E divisions and non-Class 1E equipment.	3. a. Tests will be performed on the R/B Safety-related DG HVAC System by providing a test signal in only one Class 1E division at a time. b. Inspection of the as-built Class 1E divisions in the R/B Safety-Related DG HVAC System will be performed.	3. a. The test signal exists only in the Class 1E division under test in the R/B Safety-Related DG HVAC System. b. In the R/B Safety-Related DG HVAC System, physical separation or electrical isolation exists between Class 1E divisions. Physical separation or electrical isolation exists between these Class 1E divisions and non-Class 1E equipment
4. Each mechanical division of the R/B Safety-Related DG HVAC System (Divisions A, B and C) is physically separated from the other divisions.	4. Inspections of the as-built R/B Safety-Related DG HVAC System will be conducted.	4. Each mechanical division of the R/B Safety-Related DG HVAC System is physically separated from the other mechanical divisions of the R/B Safety-Related DG HVAC System by structural and/or fire barriers.
5. Main control room displays and controls provided for R/B Safety-Related DG HVAC System are as defined in Section 2.15.5.	5. Inspections will be performed on the main control room displays and controls for the R/B Safety-Related DG HVAC System.	5. Displays and controls exist or can be retrieved in the main control room as defined in Section 2.15.5.

Table 2.15.5f Reactor Building Secondary Containment HVAC System

Inspections, Tests, Analyses and Acceptance Criteria		
Design Commitment	**Inspections, Tests, Analyses**	**Acceptance Criteria**
1. The basic configuration of the R/B Secondary Containment HVAC System is as shown on Figure 2.15.5j.	1. Inspections of the as-built system will be conducted.	1. The as-built R/B Secondary Containment HVAC System conforms with the basic configuration shown on Figure 2.15.5j.
2. The R/B Secondary Containment HVAC System maintains a negative pressure in the secondary containment relative to the outside atmosphere.	2. Tests will be conducted on the R/B Secondary Containment HVAC System in the normal mode of operation.	2. The R/B Secondary Containment HVAC System maintains a negative pressure in the secondary containment relative to the outside atmosphere.
3. The R/B Secondary Containment HVAC System isolation dampers are closed upon receipt of an isolation signal from the LDS, or signal indicating loss of secondary containment supply and exhaust fans.	3. Tests will be conducted on the R/B Secondary Containment HVAC System using simulated LDS isolation and loss of secondary containment supply and exhaust fans signals.	3. Upon receipt of a simulated signal, isolation dampers are automatically closed.
4. The smoke removal mode is manually initiated by starting the standby exhaust and supply fans, operating the exhaust filter unit bypass dampers, and partially closing the exhaust dampers for divisions not affected by fire.	4. Tests will be conducted in the smoke removal mode.	4. On manual initiation of smoke removal mode the following occurs: a. The standby exhaust fan starts. b. The standby supply fan starts. c. The filter unit bypass damper opens. d. The exhaust dampers of divisions not affected by fire partially close to a predetermined position. e. The measured air flow rate and the pressure in the ducts are at least equal to the values of the as-built smoke removal analysis.

Table 2.15.5f Reactor Building Secondary Containment HVAC System (Continued)

Inspections, Tests, Analyses and Acceptance Criteria		
Design Commitment	**Inspections, Tests, Analyses**	**Acceptance Criteria**
5. Each R/B Secondary Containment HVAC System isolation damper requiring electrical power is powered from the Class 1E division, as shown on Figure 2.15.5j. In the R/B secondary containment HVAC system, independence is provided between Class 1E divisions, and between Class 1E divisions and non-Class 1E equipment.	5. a. Tests will be performed on the R/B Secondary Containment HVAC System by providing a test signal in only one Class 1E division at a time. b. Inspection of the as-built Class 1E divisions in the R/B Secondary Containment HVAC System will be performed.	5. a. The test signal exists only in the Class 1E division under test in the R/B Secondary Containment HVAC System. b. In the R/B Secondary Containment HVAC System, physical separation or electrical isolation exists between Class 1E divisions. Physical separation or electrical isolation exists between these Class 1E divisions and non-Class 1E equipment.
6. Fire dampers with fusible links in HVAC duct work close under air flow conditions.	6. Type tests of fire dampers in a test facility will be performed for closure under system air flow conditions.	6. Fire dampers close under system air flow conditions.
7. Main control room displays and controls provided for the R/B Secondary Containment HVAC System are as defined in Section 2.15.5.	7. Inspections will be performed on the main control room displays and controls for the R/B Secondary Containment HVAC System.	7. Displays and controls exist or can be retrieved in the main control room as defined in Section 2.15.5.
8. The pneumatically-operated secondary containment isolation dampers, shown on Figure 2.15.5j, fail to the closed position in the event of loss of pneumatic pressure or loss of electrical power to the valve actuating solenoids.	8. Tests will be conducted on the as-built R/B Secondary Containment HVAC System pneumatic isolation dampers.	8. The secondary containment isolation dampers shown on Figure 2.15.5j fail to the closed position on loss of pneumatic pressure or loss of electrical power to the valve actuating solenoids.

Table 2.15.5g Reactor Building Containment Supply/Exhaust System

Inspections, Tests, Analyses and Acceptance Criteria		
Design Commitment	**Inspections, Tests, Analyses**	**Acceptance Criteria**
1. The basic configuration of the R/B Primary Containment Supply/Exhaust HVAC System is as described in Section 2.15.5.	1. Inspections of the as-built system will be conducted.	1. The as-built R/B Primary Containment Supply/Exhaust HVAC System conforms with the basic configuration described in Section 2.15.5.

Table 2.15.5h Reactor Building Main Steam Tunnel HVAC System

Inspections, Tests, Analyses and Acceptance Criteria		
Design Commitment	**Inspections, Tests, Analyses**	**Acceptance Criteria**
1. The basic configuration of the R/B Main Steam Tunnel HVAC System is as described in Section 2.15.5.	1. Inspections of the as-built system will be conducted.	1. The as-built R/B Main Steam Tunnel HVAC System conforms with the basic configuration described in Section 2.15.5.

Table 2.15.5i Reactor Building Non-Safety-Related HVAC System

Inspections, Tests, Analyses and Acceptance Criteria		
Design Commitment	**Inspections, Tests, Analyses**	**Acceptance Criteria**
1. The basic configuration of the R/B Non-Safety-Related HVAC System is as described in Section 2.15.5.	1. Inspections of the as-built system will be conducted.	1. The as-built R/B Non-Safety-Related Equipment HVAC System conforms with the basic configuration described in Section 2.15.5.

Table 2.15.5j Reactor Internal Pump ASD Control Panel HVAC System

Inspections, Tests, Analyses and Acceptance Criteria		
Design Commitment	**Inspections, Tests, Analyses**	**Acceptance Criteria**
1. The basic configuration of the RIP ASD HVAC System is as described in Section 2.15.5.	1. Inspections of the as-built system will be conducted.	1. The as-built RIP ASD HVAC System conforms with the basic configuration described in Section 2.15.5.

Table 2.15.5k Turbine Island HVAC System

Inspections, Tests, Analyses and Acceptance Criteria		
Design Commitment	**Inspections, Tests, Analyses**	**Acceptance Criteria**
1. The basic configuration of the Turbine Island HVAC System is as described in Section 2.15.5.	1. Inspections of the as-built system will be conducted.	1. The as-built Turbine Island HVAC System conforms with the basic configuration described in Section 2.15.5.

Table 2.15.5l Radwaste Building HVAC System

Inspections, Tests, Analyses and Acceptance Criteria		
Design Commitment	**Inspections, Tests, Analyses**	**Acceptance Criteria**
1. The basic configuration of the Radwaste Building HVAC System is as described in Section 2.15.5.	1. Inspections of the as-built system will be conducted.	1. The as-built Radwaste Building HVAC System conforms with the basic configuration described in Section 2.15.5.

Table 2.15.5m Service Building HVAC System

Inspections, Tests, Analyses and Acceptance Criteria		
Design Commitment	**Inspections, Tests, Analyses**	**Acceptance Criteria**
1. The basic configuration of the S/B HVAC System is as described in Section 2.15.5.	1. Inspections of the as-built system will be conducted.	1. The as-built S/B HVAC System conforms with the basic configuration described in Section 2.15.5.
2. On receipt of a signal from the TSC or MCR, the normal air intake damper closes, the minimum outside air in take damper opens, and the ventilation air for the Clean Area is routed through the emergency filtration unit.	2. A test of the Clean Area HVAC System will be performed using a simulated isolation signal for the intake.	2. Upon receipt of a simulated isolation signal, the normal Clean Area air intake damper closes, the minimum outside air intake damper opens, and ventilation for the Clean Area is routed through the emergency filtration unit.
3. In the high radiation mode, a positive pressure is maintained in the Clean Area relative to the outside atmosphere.	3. A test will be conducted of the as-built Clean Area HVAC System in the simulated high radiation mode.	3. The Clean Area is maintained at a positive pressure relative to the outside atmosphere.
4. The emergency filtration unit for the Clean Area ventilation air has at least 95% removal efficiency for all forms of iodine (elemental, organic, particulate, and hydrogen iodide).	4. a. Tests will be conducted on each as-built emergency filtration unit. b. Tests in a test facility will be conducted of the iodine absorber material.	4. The emergency filtration unit efficiency is at least 95%.

2.15.6 Fire Protection System

Design Description

The Fire Protection System (FPS) detects, alarms and extinguishes fires. Fire detection and alarm systems are provided in all fire areas. The FPS consists of a motor driven pump, a diesel drive pump, sprinkler systems, standpipes and hose reels, and portable extinguishers. The foam systems are also used for special applications. The basic configuration of the FPS water supply system is shown on Figure 2.15.6. The FPS provides fire protection for the Reactor Building, Control Building, Turbine Building, Radwaste Building, and other plant buildings.

Areas covered by sprinklers or foam systems are also covered by the manual hose system. Areas covered only by manual hoses can be reached from at least two hose stations. A hose reel and fire extinguisher are located no greater than 30.5m from any location within the buildings.

The FPS is classified as non-safety-related. The sprinkler systems and the standpipe systems in the Reactor and Control Buildings and portions of the FPS water supply system identified in Figure 2.15.6 remain functional following a safe shutdown earthquake (SSE). These portions of the water supply are separated from the remainder of the system by valves as shown in Figure 2.15.6.

Fresh water is used for the water supply system. Two sources with a minimum capacity of 1140 m^3 for each source are provided. A minimum of 456 m^3 is reserved for use by the portion of the suppression system used for the Reactor and Control Buildings. Both the diesel driven pump and motor driven pump independently supply a minimum flow of 1893 liters/min at a pressure greater than 448.2 kPa at the most hydraulically remote hose connection in either the Reactor or Control Building. The two fire water pumps provide 5678 liters/min of flow each at a differential pressure of 863 kPa.

A fire water supply connection to the Residual Heat Removal System piping is provided from the portion of the FPS used for the Reactor and Control Buildings to provide an AC independent water addition system mode of the RHR System for reactor vessel injection or drywell sprays.

Automatic foam water extinguishing systems are provided for the diesel generator rooms and day tank rooms.

Fire detection and alarm systems are supplied with power from a non-Class 1E uninterruptible power supply.

The FPS has the following displays and alarms in the Main Control Room (MCR):

(1) Detection system fire alarms.

(2) Status of FPS pumps.

A plant fire hazards analysis considers potential fire hazards and assesses the effects of postulated fires on the ability to shutdown the reactor and to maintain the reactor in a safe, cold shutdown condition. Each postulated fire is documented in a Fire Hazards Report.

Inspections, Tests, Analyses and Acceptance Criteria

Table 2.15.6 provides a definition of the inspections, tests, and/or analyses, together with associated acceptance criteria, which will be undertaken for the Fire Protection System.

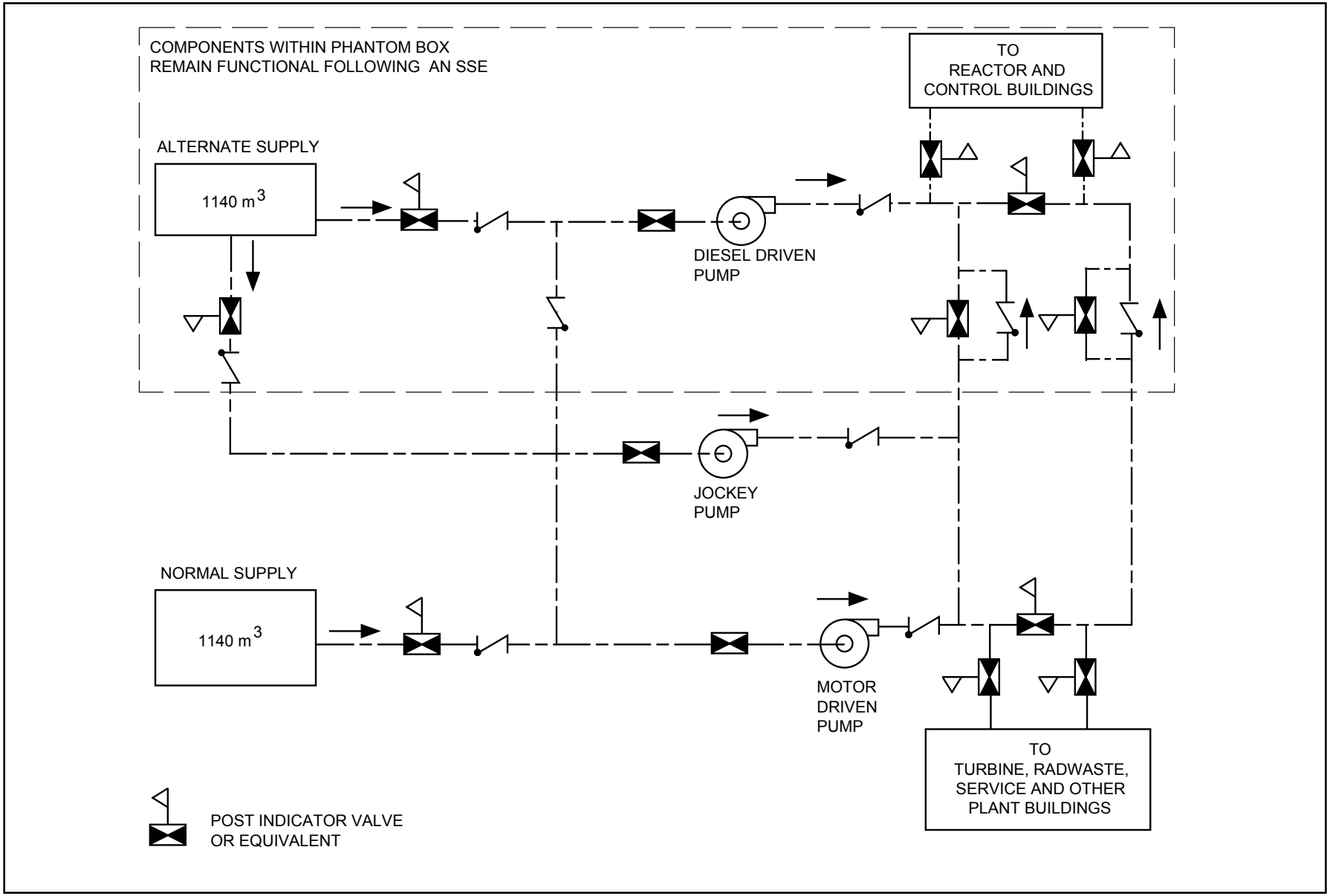

Figure 2.15.6 Fire Protection Water Supply System

Table 2.15.6 Fire Protection System

Inspections, Tests, Analyses and Acceptance Criteria		
Design Commitment	**Inspections, Tests, Analyses**	**Acceptance Criteria**
1. The basic configuration for the FPS is defined in Section 2.15.6	1. Inspections of the as-built FPS will be conducted.	1. The as-built configuration of the FPS is in accordance with Section 2.15.6.
2. Fire detection and alarm systems are provided in all fire areas.	2. Inspection and testing of the as-built detectors will be performed using simulated fire conditions.	2. The detectors respond to the simulated fire conditions.
3. The FPS for the Reactor and Control Buildings supplies a minimum flow of 1893 liters/min at a pressure greater than 448.2 kPa at the most hydraulically remote hose connection in either the Reactor or Control Building.	3. Tests will be conducted of the as-built FPS.	3. The FPS for the Reactor and Control Buildings supplies a minimum flow of 1893 liters/min at a pressure greater than 448.2 kPa at the most hydraulically remote hose connection in either the Reactor or Control Building.
4. Automatic foam-water extinguishing systems are provided for the diesel generator and day tank rooms.	4. Inspections of the as-built foam-water extinguishing systems will be conducted. The automatic logic will be tested using simulated fire conditions.	4. The automatic foam-water suppression systems are present and initiation logic is actuated under simulated fire conditions.
5. The sprinkler systems and the standpipe systems in the Reactor and Control Buildings and the portions of the FPS water supply system identified in Figure 2.15.6 remain functional following an SSE.	5. Seismic analyses of the as-built FPS will be performed.	5. An analysis report exists which concludes that as-built sprinkler systems and the standpipe systems in the Reactor and Control Buildings and the portions of the FPS water supply system identified in Figure 2.15.6 remain functional following an SSE.
6. The fire detection and alarm systems are supplied with power from a non-Class 1E uninterruptible power supply.	6. Inspections of the as-built FPS will be conducted.	6. The FPS is supplied with power from a non-Class 1E uninterruptible power supply.
7. MCR alarms and displays provided for the FPS are as defined in Section 2.15.6.	7. Inspections will be performed on the MCR alarms, and displays for the FPS.	7. Alarms and displays exist or can be retrieved in the MCR as defined in Section 2.15.6.

Table 2.15.6 Fire Protection System (Continued)

Inspections, Tests, Analyses and Acceptance Criteria		
Design Commitment	**Inspections, Tests, Analyses**	**Acceptance Criteria**
8. Two fire water supply system pumps provide 5678 liters/min of flow each at a differential pressure of 863 kPa.	8. Tests will be conducted of the as-built FPS pumps in a test facility.	8. Two fire water supply system pumps provide 5678 liters/min of flow each at a differential pressure of 863 kPa.
9. A plant fire hazards analysis considers potential fire hazards and assesses the effects of postulated fires on the ability to shutdown the reactor and to maintain the reactor in a safe, cold shutdown condition. Each postulated fire is documented in a Fire Hazards Report.	9. Inspections of the Fire Hazards Report will be conducted.	9. A Fire Hazards Report exists for the as-built plant and concludes that for each postulated fire, the plant can be shutdown and maintained in a safe, cold shutdown condition.

2.15.7 Floor Leakage Detection System

No entry for this system.

2.15.8 Vacuum Sweep System

No entry for this system.

2.15.9 Decontamination System

No entry for this system.

2.15.10 Reactor Building

Design Description

The Reactor Building (R/B) is a structure which houses and provides protection and support for the reactor primary systems, the primary containment and much of the plant safety-related equipment. Figures 2.15.10a through 2.15.10o show the basic configuration and scope of the R/B*.

The R/B is constructed of reinforced concrete and structural steel with a steel frame and reinforced concrete roof. The R/B encloses the primary containment. The R/B slabs and fuel pool girders are integrated with the reinforced concrete containment vessel (RCCV). The R/B slabs are supported by columns, shear walls and beams to carry vertical loads to the basemat and transfer horizontal loads through the RCCV and R/B shear walls to the basemat and R/B foundation. The R/B, together with the RCCV and the reactor pedestal, are supported by a common basemat. Inside the RCCV, the basemat is considered part of the Primary Containment System (PCS); outside the RCCV, the basemat is part of the R/B. The top of the R/B basemat is located 20.2m ± 0.3m below the finished grade elevation.

The R/B is divided into three separate divisional areas for mechanical and electrical equipment and four divisional areas for instrumentation racks. Inter-divisional boundaries have the following features:

(1) Inter-divisional walls, floors, doors and penetrations, and penetrations in the external R/B walls to connecting tunnels, which have three-hour fire rating.

(2) Watertight doors in the basement to prevent flooding in one division from propagating to other divisions.

(3) Divisional walls in the basement are 0.6 meters thick or greater.

Watertight doors on Emergency Core Cooling System rooms have open/close sensors with status indication and alarms in the main control room.

The R/B flooding that results from component failures in any of the R/B divisions does not prevent safe shutdown of the reactor. The basement floor is the collection location point for floods. The building configuration at this elevation is such that even for a flooding event involving release of either the suppression pool or the condensate storage tank (CST) water into the R/B, no more than one division of safety-related equipment is affected. Except for the basement area, safety-related electrical, instrumentation and control equipment is located at least 20 cm above the floor surface.

* The overall building dimensions provided in Figures 2.15.10a through 2.15.10o are provided for information only and are not intended to be part of the certified ABWR information.

The R/B is protected against external flood. The following design features are provided:

(1) External walls below flood level are equal to or greater than 0.6 meters thick to prevent ground water seepage.

(2) Penetrations in the external walls below flood level are provided with flood protection features.

(3) A tunnel connects the Radwaste Building, Turbine Building, Control Building and Reactor Building for the liquid radwaste system piping. The penetrations from the tunnel to the Reactor Building are watertight.

The R/B is protected against the pressurization effects associated with postulated rupture of pipes containing high-energy fluid that occur in subcompartments of the R/B.

There are three divisionally separated tunnels for routing Oil Storage and Transfer (OST) System piping and cable from the fuel oil storage tanks to the R/B. These tunnels are configured so that any fuel oil leakage does not accumulate at the R/B boundary. Tunnel flooding due to site flood conditions is precluded by protecting the entrances against water entry.

The R/B and oil transfer tunnels are classified as Seismic Category I. They are designed and constructed to accommodate the dynamic and static loading conditions associated with the various loads and load combinations which form the structural design basis. The loads are (as applicable) those associated with:

(1) Natural phenomena—wind, floods, tornados (including tornado missiles), earthquakes, rain and snow.

(2) Internal events—floods, pipe breaks and missiles.

(3) Normal plant operation—live loads, dead loads, temperature effects and building vibration loads.

Systems, structures, and components located in the R/B and classified as safety-related are protected against inter-divisional flooding that results from postulated failures in Seismic Category I or non-nuclear safety (NNS) components located in the R/B or from external flooding events. Each postulated flooding event is documented in a Flood Analysis Report which concludes the reactor can be shutdown safely and maintained in a safe, cold shutdown condition without offsite power.

Inspections, Tests, Analyses and Acceptance Criteria

Table 2.15.10 provides a definition of the inspections, tests, and/or analyses, together with associated acceptance criteria, which will be undertaken for the R/B.

Figure 2.15.10a Reactor Building Arrangement—Section A-A

Figure 2.15.10b Reactor Building Arrangement—Section B-B

Figure 2.15.10c Reactor Building Arrangement, Floor B3F with Divisional Boundary for Flood—Elevation –8200 mm

Figure 2.15.10d Reactor Building Arrangement, Floor B3F with Divisional Boundary for Fire—Elevation –8200 mm

Figure 2.15.10e Reactor Building Arrangement—Elevation –5100 mm

Figure 2.15.10f Reactor Building Arrangement, Floor B2F—Elevation –1700 mm

Figure 2.15.10g Reactor Building Arrangement—Elevation 1500 mm

Figure 2.15.10h Reactor Building Arrangement, Floor B1F—Elevation 4800 mm

Figure 2.15.10i Reactor Building Arrangement—Elevation 8500 mm

Figure 2.15.10j Reactor Building Arrangement, Floor 1F—Elevation 12300 mm

Figure 2.15.10k Reactor Building Arrangement, Floor 2F—Elevation 18100 mm

Figure 2.15.10l Reactor Building Arrangement, Floor 3F—Elevation 23500 mm

Figure 2.15.10m Reactor Building Arrangement—Elevation 27200 mm

Figure 2.15.10n Reactor Building Arrangement, Floor 4F—Elevation 31700 mm

Figure 2.15.10o Reactor Building Arrangement—Elevations 34500 mm and 38200 mm

Table 2.15.10 Reactor Building

Inspections, Tests, Analyses and Acceptance Criteria		
Design Commitment	**Inspections, Tests, Analyses**	**Acceptance Criteria**
1. The basic configuration of the R/B is shown on Figures 2.15.10a through 2.15.10o.	1. Inspections of the as-built structure will be conducted.	1. The as-built R/B conforms with the basic configuration shown in Figures 2.15.10a through 2.15.10o.
2. The top of the R/B basemat is located 20.2m ±0.3m below the finished grade elevation.	2. Inspections of the as-built structure will be conducted.	2. The top of the R/B basemat is located 20.2m ±0.3m below the finished grade elevation.
3. Inter-divisional walls, floors, doors and penetrations, and penetrations in the external R/B walls to connecting tunnels, have a three-hour fire rating.	3. Inspections of the as-installed inter-divisional boundaries and external wall penetrations to connecting tunnels will be conducted.	3. The as-installed walls, floors, doors and penetrations that form the inter-divisional boundaries and external wall penetrations to connecting tunnels have a three-hour fire rating.
4. The R/B has divisional areas with walls and watertight doors are as shown on Figures 2.15.10a through 2.15.10o.	4. Inspections of the as-built walls and watertight doors will be conducted.	4. The as-built R/B has walls and watertight doors as shown on Figures 2.15.10a through 2.15.10o.
5. Main control room displays and alarms provided for the R/B are as defined in Section 2.15.10.	5. Inspections will be performed on the main control room displays and alarms for the R/B.	5. Displays and alarms exist or can be retrieved in the main control room as defined in Section 2.15.10.
6. A flooding event involving release of either the suppression pool or the CST water does not affect more than one division of safety-related equipment.	6. Inspections will be conducted of the divisional boundaries shown on Figure 2.15.10c.	6. Penetrations (except for watertight doors) in the divisional walls are at least 2.5m above the floor level of -8200 mm.
7. Except for the basement area, safety-related electrical, instrumentation, and control equipment is located at least 20 cm above the floor surface.	7. Inspections will be conducted of the as-built equipment.	7. Except for the basement area, safety-related electrical, instrumentation, and control equipment is located at least 20 cm above the floor surface.

Table 2.15.10 Reactor Building (Continued)

Inspections, Tests, Analyses and Acceptance Criteria		
Design Commitment	**Inspections, Tests, Analyses**	**Acceptance Criteria**
8. The R/B is protected against external floods by having: a. External walls below flood level that are equal to or greater than 0.6m thick to prevent ground water seepage. b. Penetrations in the external walls below flood level provided with flood protection features. c. Watertight penetrations to the Reactor Building from the tunnel that connects the Radwaste Building, Turbine Building and Reactor Building for the liquid radwaste system piping.	8. Inspections of the as-built structure will be conducted.	8. a. External walls below flood level are equal to or greater than 0.6m thick to prevent ground water seepage. b. Penetrations in the external walls below flood level are provided with flood protection features. c. Penetrations from the tunnel to the Reactor Building are watertight.
9. There are three divisionally separated tunnels for routing OST system piping from the fuel storage tanks to the R/B. These tunnels are configured so that any fuel oil leakage does not accumulate at the R/B boundary. Tunnel flooding due to site flood conditions is precluded by protecting the entrances against water entry.	9. Inspections of the as-bulit tunnels will be conducted.	9. There are three divisionally separated tunnels for routing OST System piping from the fuel storage tanks to the R/B. These tunnels are configured so that any fuel oil leakage does not accumulate at the R/B boundary. Tunnel flooding due to site flood conditions is precluded by protecting the entrances against water entry.
10. The R/B and oil transfer tunnels are able to withstand the structural design basis loads as defined in Section 2.15.10.	10. A structural analysis will be performed which reconciles the as-built data with structural design basis as defined in Section 2.15.10.	10. A structural analysis report exists which concludes that the as-built R/B and oil tranfer tunnels are able to withstand the structural design basis loads as defined in Section 2.15.10.

Table 2.15.10 Reactor Building (Continued)

Inspections, Tests, Analyses and Acceptance Criteria		
Design Commitment	**Inspections, Tests, Analyses**	**Acceptance Criteria**
11. Systems, structures and components located in the R/B and classified as safety-related are protected against inter-divisional flooding that results from postulated failures in Seismic Category I or NNS related components located in the R/B or from external flooding events. Each postulated flooding event is documented in a Flood Analysis Report which concludes the reactor can be shutdown safely and maintained in a safe, cold shutdown condition without offsite power.	11. Inspections of the Flood Analysis Report and the as-built flood protection features will be conducted.	11. A Flood Analysis Report exists for the as-built R/B and concludes that for each postulated flooding event, the reactor can be shutdown safely and maintained in a safe, cold shutdown condition without offsite power. The Flood Analysis Report includes the results of inspections of the as-built flood protection features.

2.15.11 Turbine Building

Design Description

The Turbine Building (T/B) includes the electrical building and houses the main turbine generator and other power conversion cycle equipment and auxiliaries. The T/B is located adjacent to the safety-related Seismic Category I Control Building. With the exception of instrumentation associated with monitoring of condenser pressure, turbine first-stage pressure, turbine control valve oil pressure and stop valve position, there is no safety-related equipment in the T/B. The electrical building houses various plant support systems and equipment such as non-divisional switchgear and chillers.

A tunnel connects the Radwaste Building, Turbine Building, Control Building and Reactor Building for the liquid radwaste system piping. The penetrations from the tunnel to the Turbine Building are watertight and have a three hour fire rating.

Flood conditions in the T/B, except for the electrical building, are prevented from propagating into the Control Building (C/B) via the Service Building. This is achieved by locating the access from the T/B to the S/B at or above grade level and providing a flood control doorway at the access location.

The T/B is not classified as a Seismic Category I structure. However, the building is designed such that damage to safety-related functions does not occur under seismic loads corresponding to the safe shutdown earthquake (SSE) ground acceleration.

Inspections, Tests, Analyses and Acceptance Criteria

Table 2.15.11 provides a definition of the inspections, tests, and/or analyses, together with associated acceptance criteria, which will be undertaken for the Turbine Building.

Table 2.15.11 Turbine Building

Inspections, Tests, Analyses and Acceptance Criteria		
Design Commitment	**Inspections, Tests, Analyses**	**Acceptance Criteria**
1. The basic configuration of the T/B is described in Section 2.15.11.	1. Inspections of the as-built structure will be conducted.	1. The as-built T/B conforms with the basic configuration described in Section 2.15.11.
2. The T/B is designed such that damage to safety-related functions does not occur under seismic loads corresponding to the SSE ground acceleration.	2. A seismic analysis of the as-built T/B will be performed.	2. A structural analysis report exists which concludes that under seismic loads corresponding to the SSE ground acceleration the as-built T/B does not damage safety-related functions.

2.15.12 Control Building

Design Description

The Control Building (C/B) is a structure which houses and provides protection and support for plant control and electrical equipment, batteries, portions of the Reactor Building Cooling Water (RCW) System, and C/B heating, ventilating and air conditioning equipment. The C/B is located between the Reactor and Turbine Buildings. Figures 2.15.12a through 2.15.12h show the basic configuration and scope of the C/B.*

The C/B is constructed of reinforced concrete and structural steel. The C/B is a shear-wall structure (which accommodates seismic loads) consisting of the perimeter walls, the steam-tunnel walls and the connected supporting floors. Columns and walls carry vertical loads to the basemat. The top of the C/B basemat is located 20.2m ±0.3m below the finished grade elevation.

The C/B, except for the main control area envelope, is divided into three separate divisional areas for mechanical and electrical equipment and four divisional areas for instrumentation and control equipment (including batteries). Interdivisional boundaries have the following features:

(1) Inter-divisional walls, floors, doors and penetrations , and penetrations in the external C/B walls to connecting tunnels, which have three-hour fire rating.

(2) Watertight doors to prevent flooding in one division from propagating to other divisions.

(3) Divisional walls in the basement are 0.6m thick or greater.

The main control area envelope is separated from the rest of the C/B by walls, floors, doors and penetrations which have three-hour fire rating.

Watertight doors between flood divisions have open/close sensors with status indication and alarms in the main control room.

The C/B flooding that results from component failures in any of the C/B divisions does not prevent safe shutdown of the reactor. The basement floor is the collection point for floods. Except for the basement and main control area envelope, safety-related electrical equipment and instrumentation and control equipment is located at least 20 centimeters above the floor surface. Level sensors are located in the basement area of each of the three mechanical divisions. These sensors send signals to the corresponding

* The overall building dimensions provided in Figures 2.15.12a through 2.15.12h are for information only and are not intended to be part of the certified ABWR information.

divisions of the Reactor Service Water (RSW) System indicating flooding in that division of the C/B. These sensors are located no higher than 1500 mm above the C/B basement floor.

The basement area level sensors are powered from their respective divisional Class 1E power supply. Independence is provided between the Class 1E divisions for these sensors and also between the Class 1E divisions and non-Class 1E equipment.

To protect the C/B against an external flood the following design features are provided:

(1) External walls below flood level are equal to or greater than 0.6m thick to prevent ground water seepage.

(2) Penetrations in the external walls below flood level are provided with flood protection features.

Within the C/B, the steam tunnel has no penetrations from the steam tunnel into other areas of the C/B. The concrete thickness of the steam tunnel walls, floor and ceiling within the C/B is equal to or greater than 1.6m.

The C/B is classified as Seismic Category I. It is designed and constructed to accommodate the dynamic and static loading conditions associated with the various loads and load combinations which form the structural design basis. The loads are those associated with:

(1) Natural phenomena—wind, floods, tornadoes (including tornado missiles), earthquakes, rain and snow.

(2) Internal events—floods, pipe breaks and missiles.

(3) Normal plant operation—live loads, dead loads and temperature effects.

The steam tunnel is protected against pressurization effects that occur in the steam tunnel as a result of postulated rupture of pipes containing high energy fluid.

Systems, structures and components located in the C/B and classified as safety-related are protected against inter-divisional flooding that results from postulated failures in Seismic Category I or non-nuclear safety (NNS) components located in the C/B or from external flooding events. Each postulated flooding event is documented in a Flood Analysis Report which concludes the reactor can be shutdown safely and maintained in a safe, cold shutdown condition without offsite power.

Inspections, Tests, Analyses and Acceptance Criteria

Table 2.15.12 provides a definition of the inspections, tests, and/or analyses, together with associated acceptance criteria, which will be undertaken for the Control Building.

Figure 2.15.12a Control Building Arrangement, Section A-A

Figure 2.15.12b Control Building Arrangement, Section B-B

Figure 2.15.12c Control Building Arrangement, Floor B4F—Elevation –8200 mm

Figure 2.15.12d Control Building Arrangement, Floor B3F—Elevation –2150 mm

Figure 2.15.12e Control Building Arrangement, Floor B2F—Elevation 3500 mm

Figure 2.15.12f Control Building Arrangement, Floor B1F—Elevation 7900 mm

Figure 2.15.12g Control Building Arrangement, Floor 1F—Elevation 12300 mm

Figure 2.15.12h Control Building Arrangement, Floor 2F—Elevation 17150 mm

Table 2.15.12 Control Building

Inspections, Tests, Analyses and Acceptance Criteria		
Design Commitment	**Inspections, Tests, Analyses**	**Acceptance Criteria**
1. The basic configuration of the C/B is shown on Figures 2.15.12a through 2.15.12h.	1. Inspections of the as-built structure will be conducted.	1. The as-built C/B conforms with the basic configuration shown on Figures 2.15.12a through 2.15.12h.
2. The top of the C/B basemat is located 20.2m ±0.3m below the finished grade elevation.	2. Inspections of the as-built structure will be conducted.	2. The top of the C/B basemat is located 20.2m ±0.3m below the finished grade elevation.
3. Inter-divisional walls, floors, doors and penetrations, and penetrations in the external C/B walls to connecting tunnels, have a three-hour fire rating.	3. Inspections of the as-installed inter-divisional boundaries and external wall penetrations to connecting tunnels will be conducted.	3. The as-installed walls, floors, doors and penetrations that form the inter-divisional boundaries, and penetrations in the external C/B walls to connecting tunnels, have a three-hour fire rating.
4. The C/B has divisional areas with walls and watertight doors as shown on Figures 2.15.12a through 2.15.12h.	4. Inspections of the as-built walls, and doors will be conducted.	4. The as-built C/B has walls and watertight doors as shown on Figures 2.15.12a through 2.15.12h.
5. The main control area envelope is separated from the rest of the C/B by walls, floors, doors and penetrations which have a three-hour fire rating.	5. Inspections of the as-built structure will be conducted.	5. The as-built C/B has a main control area envelope separated from the rest of the C/B by walls, floors, doors and penetrations which have a three-hour fire rating.
6. Main control room displays and alarms provided for the C/B are as defined in Section 2.15.12.	6. Inspections will be performed on the main control room displays and alarms for the C/B.	6. Displays and alarms exist or can be retrieved in the main control room as defined in Section 2.15.12.
7. Except for the basemat and main control area envelope, safety-related electrical equipment and instrumentation, and control equipment is located at least 20 cm above the floor surface.	7. Inspections will be conducted of the as-built equipment.	7. Except for the basemat and main control area envelope, safety-related electrical equipment and instrumentation, and control equipment is located at least 20 cm above the floor surface.

Table 2.15.12 Control Building (Continued)

Inspections, Tests, Analyses and Acceptance Criteria		
Design Commitment	**Inspections, Tests, Analyses**	**Acceptance Criteria**
8. Level sensors are located in the basement area of each of the three mechanical divisions. These sensors are located no higher than 1500 mm above the C/B basement floor.	8. Inspections of the as-built equipment will be conducted.	8. Level sensors are located in the basement area of each of the three mechanical divisions. These sensors are located no higher than 1500 mm above the C/B basement floor.
9. The basement area level sensors are powered from their respective divisional Class 1E power supply. Independence is provided between the Class 1E divisions for these sensors and also between the Class 1E divisions and non-Class 1E equipment.	9. a. Tests will be conducted on the as-built sensors by providing a test signal in only one Class 1E division at a time. b. Inspections of the as-installed Class 1E divisions will be conducted.	9. a. The test signal exists only in the Class 1E division under test. b. Physical separation or electrical isolation exists between Class 1E divisions. Physical separation or electrical isolation exists between these Class 1E divisions and non-Class 1E equipment.
10. The C/B is protected against external floods by having: a. External walls below flood level equal to or greater than 0.6m thick to prevent ground water seepage. b. Penetrations in the external walls below flood level provided with flood protection features.	10. Inspections of the as-built structure will be conducted.	10. The C/B is protected against external floods by having: a. External walls below flood level equal to or greater than 0.6m thick to prevent ground water seepage. b. Penetrations in the external walls below flood level provided with flood protection features.
11. Within the C/B, the steam tunnel has no penetrations from the steam tunnel into other areas of the C/B.	11. Inspections of the as-built structure will be conducted.	11. Within the C/B, the steam tunnel has no penetrations from the steam tunnel into other areas of the C/B.
12. The concrete thickness of the steam tunnel walls, floor and ceiling within the C/B is equal to or greater than 1.6m.	12. Inspections of the as-built structure will be conducted.	12. The concrete thickness of the steam tunnel walls, floor and ceiling within the C/B is equal to or greater than 1.6m.

Table 2.15.12 Control Building (Continued)

Inspections, Tests, Analyses and Acceptance Criteria		
Design Commitment	**Inspections, Tests, Analyses**	**Acceptance Criteria**
13. The C/B is able to withstand the structural design basis loads as defined in Section 2.15.12.	13. A structural analysis will be performed which reconciles the as-built data with structural design basis as defined in Section 2.15.12.	13. A structural analysis report exists which concludes that the as-built C/B is able to withstand the structural design basis loads as defined in Section 2.15.12.
14. Systems, structures and components located in the C/B and classified as safety-related are protected against inter-divisional flooding that results from postulated failures in Seismic Category I or NNS related components located in the C/B or from external flooding events. Each postulated flooding event is documented in a Flood Analysis Report which concludes the reactor can be shutdown safely and maintained in a safe, cold shutdown condition without offsite power.	14. Inspections of the Flood Analysis Report and the as-built flood protection features will be conducted.	14. A Flood Analysis Report exists for the as-built C/B and concludes that for each postulated flooding event, the reactor can be shutdown safely and maintained in a safe, cold shutdown condition without offsite power. The Flood Analysis Report includes the results of inspections of the as-built flood protection features.

2.15.13 Radwaste Building

Design Description

The Radwaste Building (RW/B) is a structure which houses the solid and liquid radwaste treatment systems. The RW/B is classified as non-safety-related.

Flood conditions in the RW/B are prevented from propagating into the Reactor Building and Turbine Building by providing the penetrations in external walls below flood level with flood protection features.

A tunnel connects the Radwaste Building, Turbine Building, Control Building and Reactor Building for the liquid radwaste system piping. The penetrations from the tunnel to the Radwaste Building are watertight.

The external walls of the RW/B below grade and the basemat are classified as Seismic Category I. The exterior walls above grade, the floor slabs, the interior columns, and the roof are classified as non-seismic.

The external walls of the RW/B below grade and the basemat are designed and constructed to accommodate the dynamic and static loading conditions associated with the various loads and load combinations which form the structural design basis. The loads are those associated with:

(1) Natural phenomena—wind, floods, tornados, earthquakes, rain and snow.

(2) Internal event—floods.

(3) Normal plant operations—live loads, dead loads and temperature effects.

The exterior walls above grade, the floor slabs, the interior columns and the roof are designed such that damage to safety-related functions does not occur under seismic loads corresponding to the safe shutdown earthquake (SSE) ground acceleration.

The tunnel connecting the Radwaste Building, Turbine Building, Control Building and Reactor Building is designed such that damage to penetration seals at the interface with safety-related structures does not occur under siesmic loads corresponding to the safe shutdown earthqake (SSE) ground acceleration. Flooding of this tunnel during design basis site flood conditions is prevented.

Inspections, Tests, Analyses and Acceptance Criteria

Table 2.15.13 provides a definition of the inspections, tests, and/or analyses, together with associated acceptance criteria, which will be undertaken for the Radwaste Building.

Table 2.15.13 Radwaste Building

Inspections, Tests, Analyses and Acceptance Criteria		
Design Commitment	**Inspections, Tests, Analyses**	**Acceptance Criteria**
1. The basic configuration of the RW/B is described in Section 2.15.13.	1. Inspections of the as-built structure will be conducted.	1. The as-built RW/B conforms with the basic configuration in Section 2.15.13.
2. The external walls of the RW/B below grade and the basemat are able to withstand the design basis loadings as defined in Section 2.15.13.	2. A structural analysis will be performed which reconciles the as-built data with the structural design basis as defined in Section 2.15.13.	2. A structural analysis report exists which concludes that the as-built RW/B is able to withstand the structural design basis loads as defined in Section 2.15.13.
3. The exterior walls above grade, the floor slabs, the interior columns and the roof are designed such that damage to safety-related functions does not occur under seismic loads corresponding to the SSE ground acceleration.	3. A seismic analysis will be performed.	3. A structural analysis report exists which concludes that under seismic loads corresponding to the SSE ground acceleration, the as-built RW/B does not damage safety-related functions.
4. The tunnel connecting the Radwaste Building, Turbine Building, Control Building, and Reactor Building is designed such that damage to penetration seals at the interface with safety-related structures does not occur under seismic loads corresponding to the safe shutdown earthquake (SSE) ground acceleration.	4. A seismic analysis will be performed.	4. A structural analysis report exists which concludes that under seismic loads corresponding to the SSE ground acceleration, the tunnel does not damage penetration seals at the interface with safety-related structures.

2.15.14 Service Building

Design Description

The Service Building (S/B) is a structure which houses the Technical Support Center, Operational Support Center, and the counting room for analyzing post-accident samples. The S/B is classified as non-safety-related. It is located adjacent to the Control Building.

The S/B is not classified as a Seismic Category I structure.

Inspections, Tests, Analyses and Acceptance Criteria

Table 2.15.14 provides a definition of the inspections, tests, and/or analyses, together with associated acceptance criteria, which will be undertaken for the Service Building.

Table 2.15.14 Service Building

Inspections, Tests, Analyses and Acceptance Criteria		
Design Commitment	**Inspections, Tests, Analyses**	**Acceptance Criteria**
1. The basic configuration of the S/B is described in Section 2.15.14.	1. Inspections of the as-built structure will be conducted.	1. The as-built S/B conforms with the basic configuration described in Section 2.15.14.

2.16.1 Stack

No entry for this system.

2.16.2 Oil Storage and Transfer System

Design Description

The Oil Storage and Transfer (OST) System consists of three independent Emergency Diesel Generator (DG) fuel oil storage and transfer systems with their respective fuel storage tanks, transfer pumps, day tanks, and instrumentation and controls. Figure 2.16.2 shows the basic system configuration and scope.

The three divisions (Divisions I, II, and III) of the OST System provides fuel oil to their respective divisional DGs.

The OST System is classified as safety-related.

Each DG fuel oil storage tank provides a minimum seven (7) day fuel oil supply with its respective DG supplying its maximum lose-of-coolant accident (LOCA) load demand.

DG fuel oil is transferred automatically from the storage tanks to the day tanks by day tank low level signals. Manual control of DG fuel oil transfer is also provided. DG fuel oil is transferred from the storage tanks to the day tanks at a rate which exceeds the DG consumption rates while supplying their maximum LOCA load demand.

Each DG fuel oil day tank provides a minimum four (4) hour fuel oil supply with its respective DGs supplying its maximum LOCA load demand. Fuel oil is transferred from the day tanks to the engine fuel oil pumps by gravity flow.

The OST System, including the DG fuel oil storage and day tanks, is classified as Seismic Category I. Figure 2.16.2 shows the ASME Code class for the OST System.

Each of the three OST System Class 1E divisions is powered from its respective Class 1E division. In the OST System, independence is provided between Class 1E divisions, and also between the Class 1E divisions and non-Class 1E equipment.

The three DG fuel oil storage tanks are separately located underground outside of the Reactor Building. The oil storage tank external equipment is located above the maximum flood level and protected from missiles generated by the environment.

Within the Reactor Building, each mechanical division of the OST System is physically separated from the other divisions.

The OST System has the following displays and controls in the main control room (MCR):

(1) Parameter displays for DG fuel oil storage tank levels and day tank levels.

(2) Controls and status indication for DG fuel oil transfer pumps.

Inspections, Tests, Analyses and Acceptance Criteria

Table 2.16.2 provides the definition of the inspection, tests, and/or analyses, together with the associated acceptance criteria, which will be undertaken for the OST System.

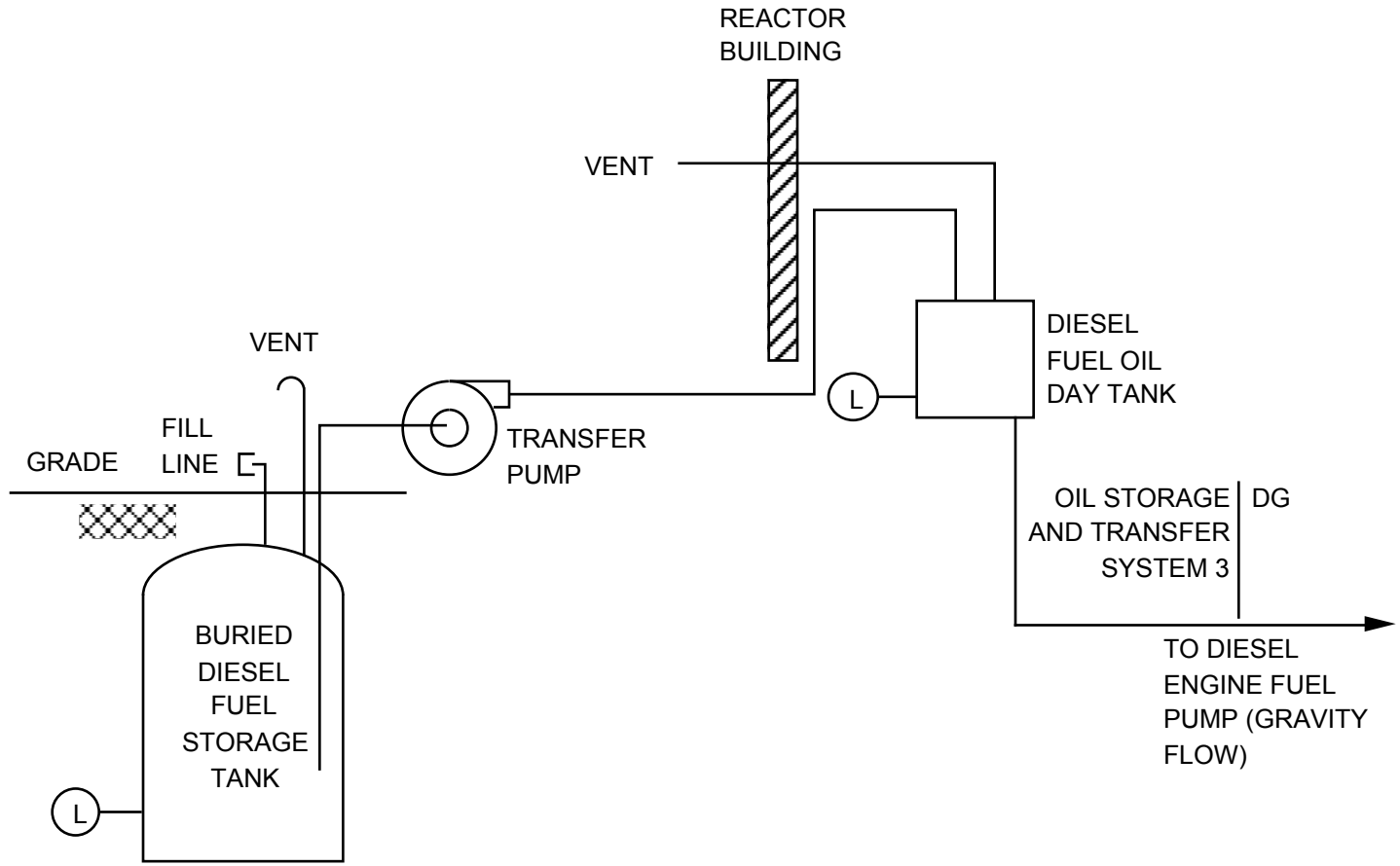

NOTES:

1. FIGURE REPRESENTS ONE OF THREE OIL STORAGE AND TRANSFER SYSTEM DIVISIONS.
2. EACH OF THE THREE DIVISIONS IS POWERED FROM ITS RESPECTIVE CLASS 1E DIVISION.

Figure 2.16.2 Oil Storage and Transfer System

Table 2.16.2 Oil Storage and Transfer System

Inspections, Tests, Analyses and Acceptance Criteria		
Design Commitment	**Inspections, Tests, Analyses**	**Acceptance Criteria**
1. The basic configuration of the OST System is as shown on Figure 2.16.2.	1. Inspections of the as-built system will be conducted.	1. The as-built OST system conforms with basic configuration shown on Figure 2.16.2.
2. The ASME Code components of the OST System retain their pressure boundary integrity under internal pressures that will be experienced during service.	2. A pressure test will be conducted on those code components of the OST System required to be pressure tested by the ASME Code.	2. The results of the pressure test of the ASME Code components of the OST System conform with the requirements in the ASME Code, Section III.
3. Each DG fuel oil storage tank provides a minimum seven (7) day fuel oil supply with its respective DG supplying its maximum LOCA load demand.	3. Analyses for the as-built DG fuel oil storage tanks to determine the required fuel oil storage volume based on DG fuel consumption data and LOCA load demand will be performed. Inspections of the as-built DG fuel oil storage tanks to determine usable fuel storage volume will be conducted.	3. Each as-built DG fuel oil storage tank provides a minimum seven (7) day fuel oil supply with its respective DG supplying its maximum LOCA load demand.
4. DG fuel oil is transferred automatically from the storage tanks to the day tanks by day tank low level signals. Manual control of DG fuel transfer is also provided.	4. Tests on the as-built DG fuel oil transfer systems will be conducted by simulating day tank low level signals, and by manual control.	4. The as-built DG fuel oil transfer system operation occurs automatically on the day tank low level signals, and when initiated manually.
5. DG fuel oil is transferred automatically from the storage tanks to the day tanks at a rate which exceeds the DG consumption rates while supplying their maximum LOCA load demand.	5. Tests on each division of the as-built DG fuel oil transfer systems will be conducted by transferring fuel oil while the DGs are supplying their maximum LOCA loads.	5. DG fuel oil is transferred automatically from the storage tanks to the day tanks at a rate which exceeds the DG consumption rates while supplying their maximum LOCA load demand.
6. Each DG fuel oil day tank provides a minimum four (4) hour fuel oil supply with its respective DG supplying its maximum LOCA load demand.	6. Analyses for the as-built DG oil day tanks to determine the required fuel oil volume using DG fuel consumption data and LOCA load demand will be performed. Inspections of the as-built DG fuel oil day tanks to determine usable fuel storage volume will be conducted.	6. Each DG fuel oil day tanks provides a minimum four (4) hour fuel oil supply with its respective DG supplying its maximum LOCA load demand.

Table 2.16.2 Oil Storage and Transfer System (Continued)

Inspections, Tests, Analyses and Acceptance Criteria		
Design Commitment	**Inspections, Tests, Analyses**	**Acceptance Criteria**
7. The DG fuel oil storage and day tanks are classified as Seismic Category I.	7. Seismic analyses on the fuel oil storage and day tanks will be performed.	7. Seismic analyses reports exist and conclude that the DG fuel oil and storage and day tanks are able to withstand Seismic loads.
8. Each of the three OST System divisions is powered from its respective Class 1E division. In the OST System, independence is provided between the Class 1E divisions, and between the Class 1E divisions and non-Class 1E equipment.	8. a. Tests will be conducted in the as-built OST System by providing a test signal in only one Class 1E division at a time. b. Inspections of the as-built Class 1E divisions in the OST System will be conducted.	8. a. The test signal exists only in the Class 1E division under test in the OST System. b. In the OST System, physical separation or electrical isolation exists between Class 1E divisions. Physical separation or electrical isolation exists between these Class 1E divisions and non-Class 1E equipment.
9. Within the Reactor Building, each mechanical division of the OST System is physically separated from the other divisions.	9. Inspections of the as-built OST System will be conducted.	9. Within the Reactor Building, each mechanical division of the OST System is physically separated from the other mechanical divisions by structural and/or fire barriers.
10. MCR displays and controls provided for the OST System are as defined in Section 2.16.2.	10. Inspections will be conducted on the MCR displays and controls for the OST System.	10. Displays and controls exist or can be retrieved in the MCR as defined in Section 2.16.2.

2.17.1 Emergency Response Facilities

Design Description

The Technical Support Center (TSC) and Operational Support Center (OSC) are the only emergency facilities within the scope of the ABWR Standard Plant.

The purpose of the TSC is to provide management and technical support to personnel in the Main Control Room during emergency conditions. The TSC is non-safety-related and is not Seismic Category I. The TSC is located in the Service Building and has sufficient space to accommodate at least 25 individuals. The TSC has voice communication equipment for communication with the Main Control Room, Emergency Operations Facility, OSC and NRC Headquarters Operation Center.

The TSC has displays for the plant parameters listed in Table 2.7.1a, Item B, Fixed Position Displays.

The purpose of the OSC is to provide an assembly area separate from the Main Control Room and TSC where licensee operations support personnel can report in an emergency. The OSC is non-safety-related and is not Seismic Category I. The OSC is located in the Service Building and has voice communication equipment for communication with the main control room and the TSC.

Inspections, Tests, Analyses and Acceptance Criteria

Table 2.17.1 provides a definition of the inspections, tests, and/or analyses, together with associated acceptance criteria, which will be performed for the Emergency Response Facilities.

Table 2.17.1 Emergency Response Facilities

Inspections, Tests, Analyses and Acceptance Criteria		
Design Commitment	**Inspections, Tests, Analyses**	**Acceptance Criteria**
1. The TSC and OSC are located in the Service Building.	1. An inspection will be performed for the location of the TSC and OSC.	1. The TSC and OSC are in different locations in the Service Building. The TSC is adjacent to the passage from the Service Building to the Control Building.
2. The TSC has sufficient space to accommodate at least 25 individuals.	2. An inspection will be performed of the floor space in the TSC.	2. The TSC has at least 175 m^2 of floor space.
3. The TSC has voice communication equipment for communication with the Main Control Room, Emergency Operations Facility, OSC, and NRC Headquarters Operation Center.	3. A test will be performed of the TSC voice communication equipment.	3. The TSC voice communication with the Main Control Room, Emergency Operations Facility, OSC, and NRC Headquarters Operation Center is audible and intelligible at each location.
4. The TSC has displays for the plant parameters listed in Table 2.7.1a, Item B, Fixed Position Displays.	4. An inspection will be conducted on the displays for the TSC.	4. Displays exist or can be retrieved in the TSC for the plant parameters listed in Table 2.7.1a, Item B.
5. The OSC has voice communication equipment for communication with the main control room and TSC.	5. A test will be performed of the OSC voice communication equipment.	5. The OSC voice communication with the Main Control Room and TSC is audible and intelligible at each location.

3.0 Additional Certified Design Material

This section provides additional certified design material for those aspects of the Certified Design that cannot be conveniently covered in the system-by-system information presented in Section 2.0. This additional material addresses plant-wide, multi-system issues; the extent to which the material applies to each of the individual Section 2.0 systems is defined by scope/application discussions in each of the Section 3.0 entries.

3.1 Human Factors Engineering

Design Description

The ABWR certified design's human-system interface (HSI) will be developed, designed, and evaluated based upon a human factors systems analysis and shall reflect human factors principles. The HSI scope applies to the main control room (MCR) and Remote Shutdown System (RSS). Further, within the MCR, the HSI scope includes that area which provides the displays, controls and alarms required for normal, abnormal and emergency plant operations.

The HSI design effort will be directed by a multi-disciplinary HFE Design Team comprised of personnel with expertise in human factors engineering (HFE) and in other technical areas relevant to the HSI design, evaluation and operations. The HFE Design Team shall develop a Program Plan to establish methods for implementing the HSI design through a process of human factor systems analysis as shown in Figure 3.1. Implementation of that process will be as follows:

(1) A System Functional Requirements Analysis Implementation Plan will be developed which establishes that plant system functional requirements will be analyzed to identify those functions which must be performed to satisfy the objectives of each functional area. System functional requirements analyses, as corrected to account for nonconformances, will be conducted in conformance with the provisions of this plan. The functional analyses will determine the objectives, performance requirements and constraints of the design, and establish the functions which must be accomplished to meet the objectives and required performance.

(2) An Allocation of Functions Implementation Plan will be developed to establish methods of allocating functions to personnel, system elements and personnel-system combinations. An analysis of the allocation of system functions, as corrected to account for nonconformances, will be conducted in conformance with the provisions of this Plan.

(3) A Task Analysis Implementation Plan will be developed to establish methods for conducting the task analysis. The task analysis, as corrected to account for nonconformances, will be conducted in conformance with the provisions of this Plan and will be used to identify the behavioral requirements of the tasks the personnel are required to perform in order to achieve the functions allocated to them. The task analysis will identify the information and control requirements that form the basis for specifying the requirements for the displays, data processing and controls needed to carry out the tasks. The task analysis will also be used to maintain human performance requirements within human capabilities, as an input for developing personnel skill,

personnel training, plant procedures and system communication requirements and as an input to the evaluation of established plant operations control room staffing levels.

(4) A Human-System Interface Design Implementation Plan will be developed to establish methods for applying human engineering principles in the design definition and evaluation of the HSI. HSI design definition and evaluation, as corrected to account for nonconformances, shall be conducted in conformance with the provisions of this plan.

(5) A Human Factors Verification and Validation Implementation Plan will be developed to establish methods for conducting an evaluation of the HSI design as an integral system using HFE evaluation principles, procedures and criteria. The HSI design, as corrected to account for nonconformances, will be evaluated as an integrated system in conformance with the provisions of this plan.

(6) The as-built configuration of the MCR and RSS shall be in conformance with the certified and validated MCR and RSS designs.

Inspections, Tests, Analyses and Acceptance Criteria

Table 3.1 provides a definition of the instructions, tests, and/or analyses, together with associated acceptance criteria, which will be undertaken to demonstrate compliance with the HFE commitments for the certified design.

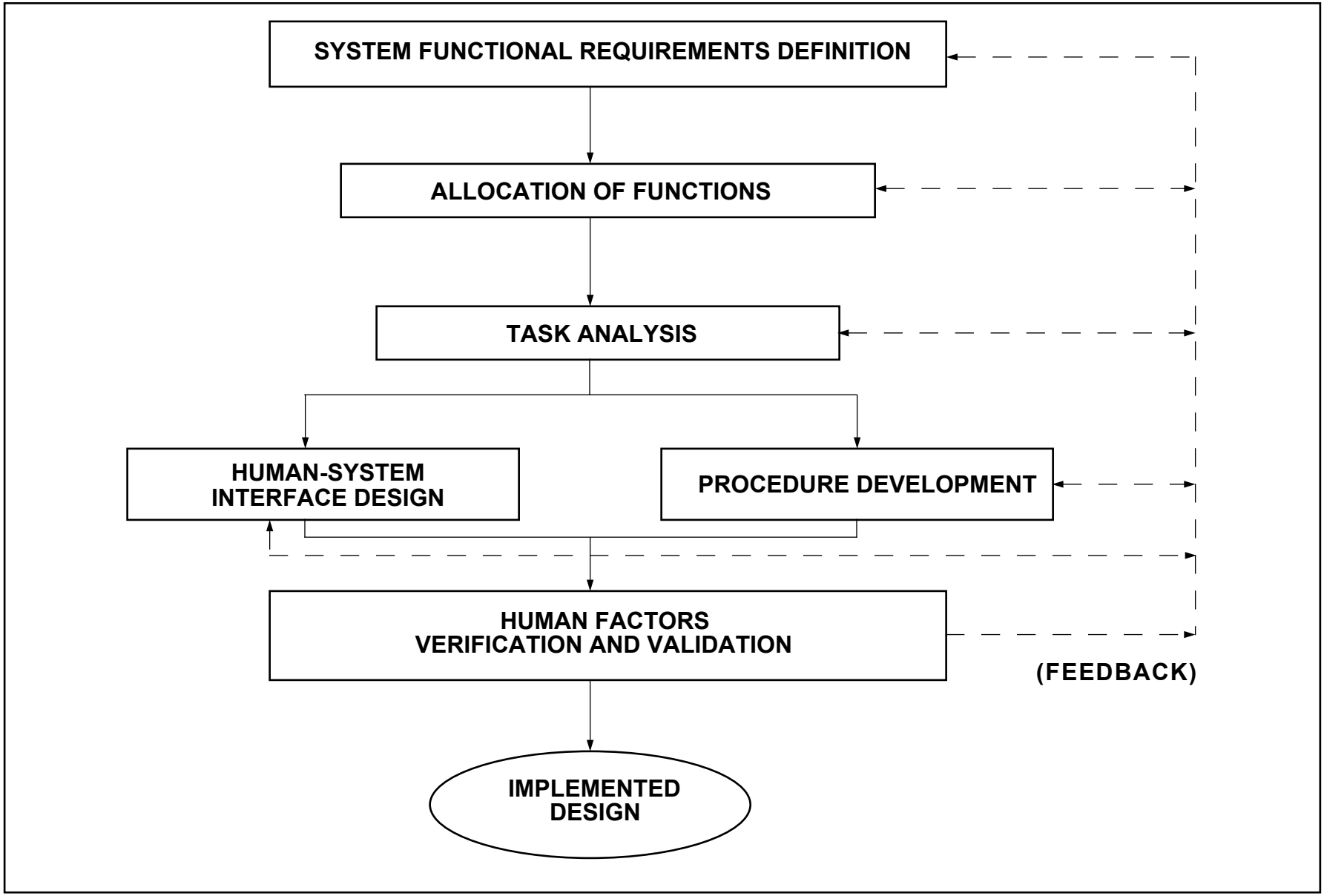

Figure 3.1 Human-System Interface Design Implementation Process

Table 3.1 Human Factors Engineering

Inspections, Tests, Analyses and Acceptance Criteria		
Design Commitment	**Inspections, Tests, Analyses**	**Design Acceptance Criteria**
1.	1.	1.
a. A multi-disciplinary HFE Design Team shall be established and be comprised of personnel with expertise in HFE and in other technical areas relevant to the HSI design, evaluation and operation.	a. The composition of the HFE Design Team shall be reviewed.	a. The HFE design team shall be comprised of the following expertise: (1) Technical Project Management (2) Systems Engineering (3) Nuclear Engineering (4) Control and Instrumentation Engineering (5) Architect Engineering (6) Human Factors (7) Plant Operations (8) Computer Systems Engineering (9) Plant Procedure Development (10) Personnel Training
b. An HFE Program Plan shall be developed which establishes that the human-system interfaces shall be developed, designed, and evaluated based upon human factors systems analysis and shall reflect human factors principles. The HSI scope shall apply to the MCR and RSS.	b. The HFE Program Plan shall be reviewed.	b. The HFE Program Plan shall establish: (1) Methods and criteria for the HSI development, design and evaluation in accordance with accepted human factors practices and principles. (2) Methods for addressing: (a) The ability of the operating personnel to accomplish assigned tasks. (b) Operator workload levels and vigilance.

Table 3.1 Human Factors Engineering (Continued)

Inspections, Tests, Analyses and Acceptance Criteria		
Design Commitment	**Inspections, Tests, Analyses**	**Design Acceptance Criteria**
1.b. Continued	1.b. Continued	1.b. Continued (c) Operating personnel "situation awareness." (d) The operators' information processing requirements. (e) Operator memory requirements. (f) The potential for operator error. (3) HSI design and evaluation scope which applies to the MCR and RSS. The HSI scope shall address normal, abnormal and emergency plant operations, and test and maintenance interfaces that impact the functions of the operations personnel. The HSI scope shall also address the development of operating technical procedures for normal, abnormal and emergency plant operations and the identification of personnel training needs applicable to the HSI design.

Table 3.1 Human Factors Engineering (Continued)

Inspections, Tests, Analyses and Acceptance Criteria		
Design Commitment	**Inspections, Tests, Analyses**	**Design Acceptance Criteria**
1.b. Continued	1.b. Continued	1.b. Continued (4) The HFE Design Team as being responsible for: (a) The development of HFE plans and procedures. (b) The oversight and review of HFE design, development, test, and evaluation activities. (c) The initiation, recommendation, and provision of solutions through designated channels for problems identified in the implementation of the HFE activities. (d) Verification of implemention of solutions to problems. (e) Assurance that HFE activities comply with the HFE plans and procedures. (f) Phasing of activities. (5) The methods for the identification, closure and documentation of human factors issues. (6) The HSI design configuration control procedures. (7) The methods for reviewing HSI operating experience.

Table 3.1 Human Factors Engineering (Continued)

Inspections, Tests, Analyses and Acceptance Criteria		
Design Commitment	**Inspections, Tests, Analyses**	**Design Acceptance Criteria**
2.	2.	2.
a. A System Functional Requirements Analysis Implementation Plan shall be developed which establishes that plant system requirements shall be analyzed to identify those functions which must be performed to satisfy the objectives of each functional area. System function analysis shall determine the objective, performance requirements, and constraints of the design, and establish the functions which must be accomplished to meet the objectives and required performance.	a. The System Functional Requirements Analysis Implementation Plan shall be reviewed.	a. The System Functional Requirements Analysis Implementation Plan shall establish: (1) Methods and criteria for conducting the System Functional Requirements Analysis in accordance with accepted human factors practices and principles. (2) That system requirements shall define the system functions and those system functions shall provide the basis for determining the associated HSI performance requirements. (3) That functions critical to safety shall be identified. (4) That descriptions shall be developed for each of the identified functions and for overall system configuration design itself. Each function shall be identified and described in terms of inputs (observable parameters which will indicate system status), functional processing (control process and performance measures required to achieve the function), functional operations (including detecting signals, measuring information, comparing one measurement with another, processing

Table 3.1 Human Factors Engineering (Continued)

Inspections, Tests, Analyses and Acceptance Criteria		
Design Commitment	**Inspections, Tests, Analyses**	**Design Acceptance Criteria**
2.a. Continued	2.a. Continued	information, and acting upon decisions to produce a desired condition or result such as a system or component operation actuation or trip), outputs, feedback (how to determine correct discharge of function), and interface requirements so that subfunctions are related to larger functional elements.
b. An analysis of system functional requirements shall be conducted.	b. The analysis of the system functional requirements shall be reviewed.	b. The system functional requirements analysis, as corrected to account for nonconformances, is conducted in accordance with the requirements of the Human Factors Engineering Program Plan and the System Functional Requirements Analysis Implementation Plan.

Table 3.1 Human Factors Engineering (Continued)

Inspections, Tests, Analyses and Acceptance Criteria		
Design Commitment	**Inspections, Tests, Analyses**	**Design Acceptance Criteria**
3.	3.	3.
a. An Allocation of Function Implementation Plan shall be developed which establishes the methods for allocating functions to personnel, system elements, and personnel-system combinations.	a. The Allocation of Function Implementation Plan shall be reviewed.	a. The Allocation of Function Implementation Plan shall establish: (1) The methods and criteria for the execution of function allocation in accordance with accepted human factors practices and principles. (2) That aspects of system and functions definition shall be analyzed in terms of resulting human performance requirements based on the user population. (3) That the allocation of functions to personnel, system elements, and personnel system combinations shall reflect: (a) Sensitivity, precision, time, and safety requirements. (b) Reliability of system performance. (c) The number and the necessary skills of the personnel required to operate and maintain the system. (4) That allocation criteria, rationale, analyses, and procedures shall be documented.

Table 3.1 Human Factors Engineering (Continued)

Inspections, Tests, Analyses and Acceptance Criteria		
Design Commitment	**Inspections, Tests, Analyses**	**Design Acceptance Criteria**
3.a. Continued	3.a. Continued	(5) That analyses shall confirm that the personnel can perform tasks allocated to them while maintaining operator situation awareness, acceptable personnel workload, and personnel vigilance.
b. A functional allocation analysis shall be conducted.	b. The functional allocation analysis shall be reviewed.	b. The functional allocation analysis, as corrected to account for nonconformances, is conducted in accordance with the requirements of the Human Factors Engineering Program Plan and the Allocation of Functions Implementation Plan.

Table 3.1 Human Factors Engineering (Continued)

Inspections, Tests, Analyses and Acceptance Criteria		
Design Commitment	**Inspections, Tests, Analyses**	**Design Acceptance Criteria**
4.	4.	4.
a. A Task Analysis Implementation Plan shall be developed which establishes that task analysis shall be conducted and used to identify the behavioral requirements of the tasks the personnel are required to perform in order to achieve the functions allocated to them. The task analysis shall be used to maintain human performance requirements within human capabilities; be used as an input for developing personnel skill, personnel training, and system communication requirements and as an input to the evaluation of established plant operations control room staffing levels; and form the basis for specifying the requirements for the displays, data processing and controls needed to carry out tasks.	a. The Task Analysis Implementation Plan shall be reviewed.	a. The Task Analysis Implementation Plan shall establish: (1) The methods and criteria for conduct of the task analyses in accordance with accepted human factors practices and principles. (2) The scope of the task analysis which shall include operations performed at the operator interface in the MCR and at the RSS. The analyses shall be directed to the range of plant operating modes, including startup, normal operations, abnormal operations, transient conditions, low power and shutdown conditions. The analyses shall also address operator interface operations during periods of maintenance, test and inspection of plant systems and equipment, including HSI equipment. (3) That the analysis shall be used to identify which tasks are critical to safety.

Table 3.1 Human Factors Engineering (Continued)

Inspections, Tests, Analyses and Acceptance Criteria		
Design Commitment	**Inspections, Tests, Analyses**	**Design Acceptance Criteria**
4.a. Continued	4.a. Continued	(4) That task analysis shall develop narrative descriptions of the personnel activities required for successful completion of the task. (5) That task analysis shall identify requirements for alarms, displays, data processing, and controls. (6) That task analysis results shall be made available as input to the personnel training programs.
b. A task analysis shall be conducted.	b. The task analysis shall be reviewed.	b. The task analysis, as corrected to account for nonconformances, is conducted in accordance with the requirements of the Human Factors Engineering Program Plan and the Task Analysis Implementation Plan.

Table 3.1 Human Factors Engineering (Continued)

Inspections, Tests, Analyses and Acceptance Criteria		
Design Commitment	**Inspections, Tests, Analyses**	**Design Acceptance Criteria**
5.	5.	5.
a. HSI Design Implementation Plan shall be developed which establishes that human engineering principles and criteria shall be applied in the design definition and evaluation of the HSI.	a. The HSI Design Implementation Plan shall be reviewed.	a. The HSI Design Implementation Plan shall establish: (1) The methods and criteria for HSI design in accordance with accepted human factors practices and principles. (2) That the HSI design shall implement the information and control requirements: (a) developed through the task analyses, including the displays, controls and alarms necessary for the execution of those tasks identified in the task analyses as being critical tasks and, (b) defined in Table 2.7.1.a. (3) The methods for comparing the consistency of the HSI human performance, equipment design and associated workplace factors with that modeled and evaluated in the completed task analysis. (4) The HSI design criteria and guidance for control room operations during periods of maintenance, test and inspection. (5) The test and evaluation methods for resolving HFE/HSI design issues. These test and evaluation methods shall include the criteria to be used in selecting HFE/HSI design and evaluation tools.

Table 3.1 Human Factors Engineering (Continued)

Inspections, Tests, Analyses and Acceptance Criteria		
Design Commitment	**Inspections, Tests, Analyses**	**Design Acceptance Criteria**
b. The HSI design shall be implemented.	b. The HSI design implementation shall be reviewed.	b. The HSI design implementation and analyses, as corrected to account for nonconformances, are conducted in accordance with the requirements of the Human Factors Engineering Program Plan and the HSI Design Implementation Plan,
6.	6.	6.
a. A Human Factors Verification and Validation (V&V) Implementation Plan shall be developed which establishes that the HSI design shall be evaluated as an integrated system using HFE evaluation principles, procedures and criteria.	a. The Human Factors V&V Plan shall be reviewed.	a. The Human Factors V&V Implementation Plan shall establish: (1) The methods and criteria for conducting the Human factors V&V in accordance with accepted human factors practices and principles. (2) That scope of the evaluations of the integrated HSI shall include: (a) The HSI (including both the interface of the operator with the HSI equipment hardware and the interface of the operator with the HSI equipment's software driven functions). (b) The Plant and Emergency Operating Procedures. (c) The HSI work environment.

Table 3.1 Human Factors Engineering (Continued)

Inspections, Tests, Analyses and Acceptance Criteria		
Design Commitment	**Inspections, Tests, Analyses**	**Design Acceptance Criteria**
6.a.Continued	6.a. Continued	6.a. Continued (3) That evaluations of the HSI equipment shall be conducted to confirm that the controls, displays, and data processing functions identified in the task analyses are provided. (4) That integration of HSI equipment with each other, with the operating personnel and with the Plant and Emergency Operating Procedures shall be evaluated through the conduct of dynamic task performance testing. The dynamic task performance tests and evaluations shall have as their objectives: (a) Confirmation that the identified critical functions can be achieved using the integrated HSI design. (b) Confirmation that the HSI design and configuration can be operated using the established MCR staffing levels.

Table 3.1 Human Factors Engineering (Continued)

Inspections, Tests, Analyses and Acceptance Criteria		
Design Commitment	**Inspections, Tests, Analyses**	**Design Acceptance Criteria**
6.a. Continued	6.a. Continued	6.a.(4) Continued (c) Confirmation that the Plant and Emergency Operating Procedures provide direction for completing the identified tasks associated with normal, abnormal and emergency operations. (d) Confirmation that the time dependent and interactive aspects of the HSI equipment performance allow for task accomplishment. (e) Confirmation that the allocation of functions is sufficient to enable task accomplishment. (5) That dynamic task performance test evaluations shall be conducted over the range of operational conditions and upsets.

Table 3.1 Human Factors Engineering (Continued)

Inspections, Tests, Analyses and Acceptance Criteria		
Design Commitment	**Inspections, Tests, Analyses**	**Design Acceptance Criteria**
6.a. Continued	6.a. Continued	6.a. Continued (6) The HFE performance measures to be used as the basis for evaluating the dynamic task performance test results. These performance measures shall address: (a) Operating crew primary task performance characteristics, such as task times and procedure compliance. (b) Operating crew errors and error rates. (c) Operating crew situation awareness. (d) Operating crew workload. (e) Operating crew communications and coordination. (f) Anthropometry evaluations. (g) HSI equipment performance measures. (7) The methods to confirm that HFE issues identified and documented have been resolved in the integrated HSI design.

Table 3.1 Human Factors Engineering (Continued)

Inspections, Tests, Analyses and Acceptance Criteria		
Design Commitment	**Inspections, Tests, Analyses**	**Design Acceptance Criteria**
6.a. Continued	6.a. Continued	6.a. Continued (8) The methods and criteria to be used to confirm that critical human tasks, as defined by the task analysis, have been addressed in the integrated HSI design.
b. A human factors engineering analysis of the integrated HSI design shall be conducted.	b. The analyses of the integrated HSI design shall be reviewed.	b. The human factors engineering analysis of the HSI design, as corrected to account for nonconformances, is conducted in accordance with the requirements of the Human Factors Engineering Program Plan and the Human Factors V&V Implementation Plan.
7. The as-built configuration of the MCR and RSS shall be in conformance with the certified and validated MCR and RSS designs.	7. Inspections of the as-built MCR and RSS will be conducted.	7. An as-built evaluation report exists which concludes that the as-built MCR and RSS conform to the certified and validated MCR and RSS configurations, including layouts, environmental characteristics, the HSI, alarms, displays and controls.

3.2 Radiation Protection

Design Description

The ABWR design provides radiation protection features to keep exposures for both plant personnel and the general public below allowable limits. This section applies to the radiological shielding and ventilation design of the Reactor Building, Turbine Building, Control Building, Service Building, and Radwaste Building.

The plant design provides radiation shielding for rooms, corridors and operating areas commensurate with their occupancy requirements. Shielded cubicles, labyrinth access and provisions for temporary shielding are used to reduce exposure. Under accident conditions, plant shielding designs permit operators to perform required safety functions in vital areas of the plant. A vital area is an area which will or may require occupancy to permit an operator to aid in the mitigation of or recovery from an accident. In addition to protection of operating personnel, the plant design provides radiation shielding to protect the general public.

Plant ventilation systems maintain concentrations of airborne radionuclides at levels consistent with personnel access requirements. In addition, airborne radioactivity monitoring is provided for those normally occupied areas of the plant in which there exists a significant potential (greater than 0.1 per year) for airborne contamination.

Inspections, Tests, Analyses and Acceptance Criteria

Tables 3.2a and 3.2b provide a definition of the inspections, tests, and/or analyses, together with associated acceptance criteria, which will be undertaken for the ABWR plant shielding, ventilation and airborne monitoring equipment.

Figure 3.2a Reactor Building Radiation Zone Map for Full Power and Shutdown Operations, Section A-A

Figure 3.2b Reactor Building Radiation Zone Map for Full Power and Shutdown Operations, Section B-B

Figure 3.2c Reactor Building Radiation Zone Map for Full Power and Shutdown Operations, Floor B3F—Elevation –8200 mm

Figure 3.2d Reactor Building Radiation Zone Map for Full Power and Shutdown Operations—Elevation –5100 mm

Figure 3.2e Reactor Building Radiation Zone Map for Full Power and Shutdown Operations, Floor B2F—Elevation –1700 mm

Figure 3.2f Reactor Building Radiation Zone Map for Full Power and Shutdown Operations—Elevation 1500 mm

Figure 3.2g Reactor Building Radiation Zone Map for Full Power and Shutdown Operations, Floor B1F—Elevation 4800 mm

Figure 3.2h Reactor Building Radiation Zone Map for Full Power and Shutdown Operations—Elevation 8500 mm

Figure 3.2i Reactor Building Radiation Zone Map for Full Power and Shutdown Operations, Floor 1F—Elevation 12300 mm

Figure 3.2j Reactor Building Radiation Zone Map for Full Power and Shutdown Operations, Floor 2F—Elevation 18100 mm

Figure 3.2k Reactor Building Radiation Zone Map for Full Power and Shutdown Operations, Floor 3F—Elevation 23500 mm

Figure 3.2l Reactor Building Radiation Zone Map for Full Power and Shutdown Operations—Elevation 27200 mm

Figure 3.2m Reactor Building Radiation Zone Map for Full Power and Shutdown Operations, Floor 4F—Elevation 31700mm

Figure 3.2n Reactor Building Radiation Zone Map for Full Power and Shutdown Operations—Elevations 34500 mm and 38200 mm

Figure 3.2o Control Building Radiation Zone Map for Full Power Operations, Section A-A

Figure 3.2p Control Building Radiation Zone Map for Full Power Operations, Section B-B

Figure 3.2q Control Building Radiation Zone Map for Full Power Operation, Floor B4F—Elevation –8200 mm

Figure 3.2r Control Building Radiation Zone Map for Full Power Operation, Floor B3F—Elevation –2150 mm

Figure 3.2s Control Building Radiation Zone Map for Full Power Operation, Floor B2F—Elevation 3500 mm

Figure 3.2t Control Building Radiation Zone Map for Full Power Operation, Floor B1F—Elevation 7900 mm

Figure 3.2u Control Building Radiation Zone Map for Full Power Operation, Floor 1F—Elevation 12300 mm

Figure 3.2v Control Building Radiation Zone Map for Full Power Operation, Floor 2F—Elevation 17150 mm

Table 3.2a Plant Shielding Design

Inspections, Tests, Analyses and Acceptance Criteria		
Design Commitment	**Inspections, Tests, Analyses**	**Acceptance Criteria**
1. The plant design shall provide radiation shielding for rooms, corridors and operating areas commensurate with their occupancy requirements.	1. An analysis of the expected radiation levels in each plant area will be performed to verify the adequacy of the shielding design. This analysis shall consider the following: a. Confirmatory calculations shall consider significant radiation sources (greater than 5% contribution) for an area. Radiation source strength in plant systems and components will be determined based upon an assumed source term of 3,700 MBq/s offgas release rate (after 30 minutes decay), a 11.1 MBq/gram-steam N-16 source term at the vessel exit nozzle, and a core inventory commensurate with a 4005 MW_t equilibrium core at 51.6 kW/liter. Source terms shall be adjusted for radiological decay and buildup of activated corrosion and wear products. b. Commonly accepted shielding codes, using nuclear properties derived from well known references (such as Vitamin C and ANSI/ANS-6.4) shall be used to model and evaluate plant radiation environments. (1) For non-complex geometries, point kernel shielding codes (such as QAD or GGG) shall be used.	1. Maximum expected radiation dose rates in each plant area (deep dose equivalent measured at 30 cm from the source of the radiation, not contact dose rates) are no greater than the dose rates specified for the following zones, based on the access requirements of that area for plant operation and maintenance. Zone / Dose Rate (μSv/h) / Access Requirements A / ≤6 / Uncontrolled, unlimited access. B / <10 / Controlled, unlimited access. C / <50 / Controlled, limited access 20 h/week. D / <250 / Controlled, limited access 4 h/week. E / <1000 / Controlled, limited access 1 h/week. F / ≥1000 / Restricted, infrequent access. Authorization required.

Table 3.2a Plant Shielding Design (Continued)

Inspections, Tests, Analyses and Acceptance Criteria		
Design Commitment	**Inspections, Tests, Analyses**	**Acceptance Criteria**
	(2) For complex geometries, more sophisticated two or three dimensional transport codes (such as DORT or TORT) shall be used.	Plant layout such that access to higher zones (areas with higher dose rates) is from lower zoned areas. Corridors and normal traffic areas are Zone C or less. Control rooms are Zone B or less. Radiation zones for the Reactor Building and Control Building are indicated in Figures 3.2a through 3.2v.
	c. A safety factor shall be applied based upon benchmark comparisons.	
2. The plant design shall provide shielded cubicles, labyrinth access, and space for temporary shielding to reduce radiation exposure from adjacent rooms.	2. Using the methods identified in (1) above, radiation levels present in rooms shall be evaluated for the contribution from adjacent rooms.	2. Shielding design of a room including any temporary shielding is such that radiation from adjacent rooms shall contribute no more than a small fraction (10% or less) of the dose rate or less than 0.6 μSv/h whichever is larger, in the room. For this purpose, the drywell shall be considered a room.
3. The plant radiation shielding design shall permit plant personnel to perform required safety functions in vital areas of the plant (including access and egress of these areas) under accident conditions.	3. An analysis of the expected high radiation levels in each area which will or may require occupancy to permit plant personnel to aid in the mitigation of or recovery from an accident (vital area) shall be performed to verify the adequacy of the plant shielding design. This analysis shall use calculational methods consistent with (1.b) above and a radiation source term (adjusted for radioactive decay) based on the following:	3. Under accident conditions, radiation shielding design allows access to occupancy and egress from areas required to maintain post-accident safety functions such that individual personnel radiation doses do not exceed 0.05 Sv to the whole body, or its equivalent, for the duration of the accident (based on the required frequency of access to each vital area).

Table 3.2a Plant Shielding Design (Continued)

Inspections, Tests, Analyses and Acceptance Criteria		
Design Commitment	**Inspections, Tests, Analyses**	**Acceptance Criteria**
3. (continued)	3. (continued) a. Liquid containing systems: 100% of the core equilibrium noble gas inventory, 50% of the core equilibrium halogen inventory and 1% of the equilibrium core inventory of the remaining radionuclides are assumed to be mixed in the reactor coolant and recirculation liquids recirculated by the Residual Heat Removal (RHR) System, the High Pressure Core Flooder (HPCF) System, and the Reactor Core Isolation Cooling (RCIC) System. b. Gas containing systems: 100% of the core equilibrium noble gas inventory and 25% of the core equilibrium halogen activity are assumed to be mixed in the containment atmosphere. For vapor containing systems (such as the main steam lines), these core inventory fractions are assumed to be contained in the reactor coolant vapor space.	3. (continued) For areas requiring continuous occupancy (such as the main control room, technical support center, and emergency operations support center), design dose rates shall not exceed 150 μSv/h (averaged over 30 days).
4. The plant design shall provide radiation shielding to protect the general public outside of the controlled area.	4. Using the methods identified in (1) above, the radiation dose to the maximally exposed member of the general public outside of the controlled area from direct and scattered radiation shine shall be determined.	4. As a result of normal operations, the radiation dose from direct and scattered radiation shine to the maximally exposed member of the public outside of the controlled area is equal to or less than 25 μSv/year.

Table 3.2b Ventilation and Airborne Monitoring

Inspections, Tests, Analyses and Acceptance Criteria		
Design Commitment	**Inspections, Tests, Analyses**	**Acceptance Criteria**
1. Plant design shall provide for containment of airborne radioactive materials and the ventilation system will maintain concentrations of airborne radionuclides at levels consistent with personnel access needs.	1. Expected concentrations of airborne radioactive material shall be calculated by radionuclide for normal plant operations and anticipated operational occurrences for each equipment cubicle, corridor, and operating area requiring personnel access. Calculations shall consider: a. Total ventilation flow rates for each area. b. Typical leakage characteristics for equipment located in each area. c. A radiation source term in each fluid system based upon an assumed offgas rate of 3,700 MBq/s (30 minute decay) appropriately adjusted for radiological decay and buildup of activated corrosion and wear products.	1. Calculation of radioactive airborne concentration shall demonstrate that: a. For normally occupied rooms and areas of the plant (i.e., those areas requiring routine access to operate and maintain the plant), equilibrium concentrations of airborne radionuclides will be a small fraction (10% or less) of the occupational concentration limits listed in 10CFR20 Appendix B, January 1994. b. For rooms that require infrequent access (such as for non-routine equipment maintenance), the ventilation system shall be capable of reducing radioactive airborne concentrations to (and maintaining them at) the occupational concentration limits listed in 10CFR20 Appendix B, January 1994,during the periods that occupancy is required. c. For rooms where access is not anticipated to perform scheduled maintenance or surveillance (such as the backwash receiving tank room), plant design shall provide containment and ventilation to reduce airborne contamination spread to other areas of lower contamination.

Table 3.2b Ventilation and Airborne Monitoring (Continued)

Inspections, Tests, Analyses and Acceptance Criteria		
Design Commitment	**Inspections, Tests, Analyses**	**Acceptance Criteria**
2. Airborne radioactivity monitoring shall be provided for those normally occupied areas of the plant in which there exists a significant potential for airborne contamination (greater than 0.1 per year). The airborne radioactivity system shall: a. Have the capability of detecting the time integrated concentrations of the most limiting internal dose particulate and iodine radionuclides in each area equivalent to the occupational concentration limits in 10CFR20, Appendix B, January 1994, for 10 hours. b. Provide a calibrated response, representative of the concentrations within the area (i.e., air sampling monitors in ventilation exhaust streams shall collect an isokinetic sample). c. Provide local audible alarms (visual alarms in high noise areas) with variable alarm setpoints, and readout/annunciation capability.	2. An analysis shall be performed to identify the plant areas that require airborne radioactivity monitoring.	2. Airborne radioactivity monitoring system shall be installed as defined in this certified design commitment.

3.3 Piping Design

Design Description

Piping associated with fluid systems is categorized as either nuclear safety-related (i.e., Seismic Category I) or non-nuclear safety (NNS) related (i.e., non-Seismic Category I). The piping shall be designed for a design life of 60 years. Piping systems that must remain functional during and following a safe shutdown earthquake (SSE) are designated as Seismic Category I and are further classified as American Society of Mechanical Engineers, Boiler and Pressure Vessel Code (ASME Code) Class 1, 2 or 3. The piping design requirements identified in this section encompass piping systems classified as nuclear safety-related and unless otherwise specified in this description, piping systems means nuclear safety-related piping systems. Piping systems and their components are designed and constructed in accordance with the ASME Code requirements identified in the individual system Design Descriptions.

Piping systems shall be designed to meet their ASME Code class and Seismic Category I requirements. The ASME Code Class 1, 2 and 3 piping systems shall be designed to retain their pressure integrity and functional capability under internal design and operating pressures and design basis loads. Piping stresses due to static and dynamic loads shall be combined and calculated in accordance with the ASME Code and shall be shown to be less than the ASME Code allowables for each service level.

For ASME Code Class 1 piping systems, a fatigue analysis shall be performed in accordance with the ASME Code Class 1 piping requirements. Environmental effects shall be included in the fatigue analysis. The Class 1 piping fatigue analysis shall show that the ASME Code Class 1 piping fatigue requirements have been met.

For ASME Code Class 2 and 3 piping systems, piping stress ranges due to thermal expansion shall be calculated in accordance with the ASME Code Class 2 and 3 piping requirements. The piping stress analysis shall show that the ASME Code Class 2 and 3 piping thermal expansion stress range requirements have been met. For the ASME Code Class 2 and 3 piping systems and their components which will be subjected to severe thermal transients, the effects of these transients shall be included in the design.

Feedwater lines shall be designed for thermal stratification loads.

Piping systems shall be designed to minimize the effects of erosion/corrosion.

For those piping systems using ferritic materials as permitted by the design specification, the ferritic materials and fabrication processes shall be selected to ensure that the piping system is not susceptible to brittle fracture under the expected service conditions.

For those piping systems using austenitic stainless steel materials as permitted by the design specification, the stainless steel piping material and fabrication process shall be selected to reduce the possibility of cracking during service. Chemical, fabrication, handling, welding, and examination requirements that reduce cracking shall be met.

Piping system supports shall be designed to meet the requirements of ASME Code Subsection NF.

For piping systems, the pipe applied loads on attached equipment shall be calculated and shown to be less than the equipment allowable loads.

Analytical methods and load combinations used for analysis of piping systems shall be referenced or specified in the ASME Code Certified Stress Report. Piping systems and their supports shall be mathematically modeled to provide results for piping system frequencies up to the analysis cutoff frequency. Computer programs used for piping system dynamic analysis shall be benchmarked.

Systems, structures and components that shall be required to be functional during and following an SSE shall be protected against the dynamic effects associated with postulated high energy pipe breaks in Seismic Category I and NNS piping systems. In addition, structures, systems, and components that shall be required to be functional during and following an SSE shall be protected against or qualified to withstand the environmental effects of spraying, flooding, pressure and temperature due to postulated pipe breaks and cracks in Seismic Category I and NNS piping systems. Each postulated piping failure shall be documented in a Pipe Break Analysis Report which concludes the reactor can be shut down safely and maintained in a safe, cold shutdown condition without offsite power. The Pipe Break Analyses Report shall specify the criteria used to postulate breaks and the analytical methods used to perform the pipe break analysis. For postulated pipe breaks, the Pipe Break Analysis Report shall confirm: (1) piping stresses in the containment penetration area shall be within their allowable stress limits, (2) pipe whip restraints and jet shield designs shall be capable of mitigating pipe break loads, (3) loads on safety-related systems, structures and components shall be within their design loads limits, and (4) safety-related piping required to be functional during and following an SSE are protected against or qualified to withstand the environmental conditions that would exist without loss of it's safety function for the time needed to be functional. Piping systems that are qualified for leak-before-break design may exclude design features to mitigate the dynamic effects from postulated high energy pipe breaks.

Piping systems shall be designed to provide clearance from structures, systems, and components where necessary for the accomplishment of the structure, system, or component's safety function as specified in the respective structure or system Design Description.

The as-built piping shall be reconciled with the piping design required by this section.

Inspections, Tests, Analyses and Acceptance Criteria

Table 3.3 provides a definition of the inspections, tests, analyses, and associated acceptance criteria, which will be performed for Advanced Boiling Water Reactor (ABWR) nuclear safety-related and NNS related piping systems, as specified in this design description. Piping classification information is provided in the individual Certified Design Material (CDM) entry for each of the piping systems. Furthermore, Table 3.3 may be completed on an individual system basis.

Table 3.3 Piping Design

Inspections, Tests, Analyses and Acceptance Criteria		
Design Commitment	**Inspections, Tests, Analyses**	**Acceptance Criteria**
1. The piping system shall be designed to meet its ASME Code Class and Seismic Category I requirements. The ASME Code Class 1, 2, and 3 piping system shall be designed to retain its pressure integrity and functional capability under internal design and operating pressures and design basis loads. Piping and piping components shall be designed to show compliance with the requirements of ASME Code Section III.	1. Inspections of ASME Code required documents will be conducted.	1. An ASME Code Certified Stress Report exists for the piping system and concludes that the design complies with the requirements of ASME Code, Section III.
2. Systems, structures, and components, that are required to be functional during and following an SSE, shall be protected against or qualified to withstand the dynamic and environmental effects associated with postulated failures in Seismic Category I and NNS piping systems. Each postulated piping failure shall be documented in a Pipe Break Analysis Report. Piping systems that are qualified for leak-before-break design may exclude design features to mitigate the dynamic effects from postulated high energy pipe breaks.	2. Inspections of the Pipe Break Analysis Report, or Leak-Before-Break Report (if applicable), will be conducted. An inspection of the as-built high and moderate energy pipe break mitigation features (including spatial separation) will be performed.	2. A Pipe Break Analysis Report and Leak-Before-Break Report (if applicable) exist for the as-built plant and concludes that for each postulated piping failure, the reactor can be shut down safely and maintained in a safe, cold shutdown condition without offsite power. The Pipe Break Analysis Report includes the results of inspections of high and moderate energy pipe break mitigation features including spatial separation.

Table 3.3 Piping Design

3. The as-built piping shall be reconciled with the piping design required in Section 3.3.	3. A reconciliation analysis using the as-designed and as-built information will be performed.	3. An as-built stress report exists and concludes that the as-built piping has been reconciled with the design documents used for design analysis. For ASME Code Class piping, the as-built stress report includes the ASME Code Certified Stress Report and documentation of the results of the as-built reconciliation analysis.

3.4 Instrumentation and Control

Introduction

Subsection A provides a description of the configuration of safety-related, digital instrumentation and control (I&C) equipment encompassed by Safety System Logic and Control (SSLC). Subsection B contains a description of the hardware and software development process used in the design, testing, and installation of I&C equipment. This includes descriptions of the processes used to establish programs that assess and mitigate the effects of electromagnetic interference, establish setpoints for instrument channels, and ensure the qualification of the installed equipment. Subsection C discusses the diverse features implemented in I&C system design to provide backup support for postulated worst-case common-mode failures of SSLC.

The devices addressed in this section are electronic components of the ABWR's I&C systems. These components are configured as real-time microcontrollers that use microprocessors and other programmable logic devices to perform data acquisition, data communications, and system logic processing. These components also contain automatic, on-line self-diagnostic features to monitor these tasks and off-line test capability to aid in maintenance and surveillance. The operating programs for these controllers are integrated into the hardware as firmware [software permanently stored in programmable read-only memory (PROM)]. A controller's operating system can permit field adjustment of selected parameters under proper change control. Adjustable parameters are stored in electrically-alterable read-only memory (EAROM) or equivalent.

A. Safety System Logic and Control

Design Description

Safety-related monitoring and trip logic for the plant protection systems resides in SSLC equipment. SSLC integrates the automatic decision-making and trip logic functions and manual operator initiation functions associated with the safety actions of the safety-related systems. SSLC generates the protective function signals that activate reactor trip and provide safety-related mitigation of reactor accidents. The relationship between SSLC and systems for plant protection is shown in Figure 3.4a.

SSLC equipment comprises microprocessor-based, software-controlled signal processors that perform signal conditioning, setpoint comparison, trip logic, system initiation and reset, self-test, calibration, and bypass functions. The signal processors associated with a particular safety-related system are an integral part of that system. Functions in common, such as self-test, calibration, bypass control, power supplies and certain switches and indicators, belong to SSLC. However, SSLC is not, by itself, a system; SSLC is the aggregate of signal processors for several safety-related systems. SSLC hardware and software are classified as Class 1E, safety-related.

Sensors used by the safety-related systems can be either analog, such as process control transmitters, or discrete, such as limit switches and other contact closures. While some sensor signals are hardwired directly to the SSLC processors, most sensor signals are transmitted from the instrument racks in the Reactor Building to the SSLC equipment in the Control Building via the Essential Multiplexing System (EMS). Both analog and discrete sensors are connected to remote multiplexing units (RMUs) in local areas, which perform signal conditioning, analog-to-digital conversion for continuous process inputs, change-of-state detection for discrete inputs, and message formatting prior to signal transmission. The RMUs are limited to acquisition of sensor data and the output of control signals. Trip decisions and other control logic functions are performed in SSLC processors in the main control room area.

The basic hardware configuration for one division of SSLC is shown in Figure 3.4b. Each division runs independently i.e., asynchronously) with respect to the other divisions. The following steps describe the processing sequence for incoming sensor signals and outgoing control signals. These steps are performed simultaneously and independently in each of the four divisions:

(1) The digitized sensor inputs from RMUs are received in the control room at control room multiplexing units (CMUs), which associate sensor signals with their logic processing channel. These sensor signals are decoded by a microprocessor-based function, the Digital Trip Module (DTM). For sensor signals hardwired to the control room, the DTM also performs digitizing and signal conditioning tasks. For each system function, the DTM then compares these inputs to preprogrammed threshold levels (setpoints) for possible trip action. The DTM provides a discrete trip decision for each setpoint comparison.

(2) For Reactor Protection System (RPS) trip and main steam isolation valve (MSIV) closure functions, trip outputs from the DTM are then compared, using a 2–out-of-4 coincidence logic format, with trip outputs from the DTMs of the other three divisions. The trip outputs are compared in the trip logic unit (TLU), another microprocessor-based device. The logic format for the DTM and TLU is fail-safe (i.e., de-energize-to-operate). Thus, a reactor trip or MSIV closure signal occurs on loss of input signal or power to the DTM, but, because of the 2–out-of-4 logic format in the TLU, a tripped state does not appear at the output of the TLU (for a single division loss of power). Loss of signal or power to a division's TLU also causes a tripped output state, but the 2–out-of-4 configuration of actuator load drivers prevents de-energization of the pilot valve solenoids.

(3) Trip outputs are sent from the TLU to the RPS and MSIV output logic units (OLUs). The OLUs use non-microprocessor circuitry to provide a diverse (i.e., not software-based) interface for the following manual functions:

(a) Manual reactor trip (per division: 2-out-of-4 for completion).

(b) MSIV closure (per division: 2-out-of-4 for completion).

(c) MSIV closure (eight individual control switches).

(d) RPS and MSIV trip reset.

(e) TLU output bypass

The OLUs distribute the automatic and manual trip outputs to the MSIV pilot valve and scram pilot valve actuating devices and provide control of trip seal-in, reset, and TLU output bypass (division-out-of-service bypass). Bypass inhibits automatic trip but has no effect on manual trip. The OLUs also provide a manual test input for de-energizing a division's parallel load drivers (part of the 2-out-of-4 output logic arrangement) so that scram or MSIV closure capability can be confirmed without solenoid de-energization. The OLUs are located external to the TLU so that manual MSIV closure or manual reactor trip (per division) can be performed either when a division's microprocessor logic is bypassed or when failure of sensors or microprocessor logic equipment causes trip to be inhibited.

(4) Trips are transmitted across divisions for 2–out-of-4 voting via fiber optic data links to preserve signal isolation among divisions. The TLU also receives inputs directly from the trip outputs of the Neutron Monitoring System, manual control switches, and contact closures from limit switches and position switches used for equipment interlocks. In addition, plant sensor signals and contact closures that do not require transmittal to other divisions for 2–out-of-4 trip comparison are provided as inputs directly to the TLU. In this case, the TLU also performs the trip setpoint comparison (DTM) function.

(5) For Leak Detection and Isolation System (LDS) functions (except MSIV), emergency core cooling system (ECCS) functions, other safety-related supporting functions, and Electrical Power Distribution System functions such as diesel generator start and load sequencing, logic processing is performed as above, but in DTMs separate from the RPS/MSIV DTMs and in Safety System Logic Units (SLUs). The SLUs are similar to TLUs, but are dual redundant in each processing channel for protection against inadvertent initiation. Dual SLUs both receive the same inputs from the DTM, manual control switch inputs, and contact closures. Both SLU outputs must agree before the final trip actuators are energized. The logic format for the DTM and SLUs is fail-as-is (i.e., energize-to-operate) for ECCS and other safety-related supporting

functions. Thus, loss of power or equipment failure does not cause a trip or initiation action. However, containment isolation signals are in fail-safe format and cause an isolation signal output on loss of power or signal. Besides performing 2-out-of-4 voting logic, the SLUs also provide interlock logic functions conforming to the logic diagram requirements of each supported safety system.

As shown in Figure 3.4b, a pair of SLU are located in each of two engineered safety feature (ESF) processing channels, ESF1 and ESF2. ESF1 processes initiation logic for functions which service the reactor vessel at low pressure (e.g. RHR), while ESF2 provides the same support for the vessel at high pressure (e.g. Reactor Core Isolation Cooling (RCIC) System and High Pressure Core Flooder (HPCF) System). Associated LDS and ESF functions are also allocated to these logic channels.

(6) For reactor trip or MSIV closure, if a 2–out-of-4 trip condition of sensors is satisfied, all four divisions' trip outputs produce a simultaneous coincident trip signal (e.g., reactor trip) and transmit the signal through hardwired connections (and isolators where necessary) to load drivers that control the protective action of the actuators. The load drivers are themselves arranged in a 2–out-of-4 configuration, so that at least two divisions must produce trip outputs for protective action to occur.

(7) For ESF functions, the trip signals in three divisions are transmitted by the Essential Multiplexing System to the RMUs, where a final 2–out-of-2 logic comparison is made prior to distribution of the control signals to the final actuators. ESF outputs do not exist in Division IV.

The DTM, TLU, and OLUs for RPS and MSIV in each of the four instrumentation divisions are powered from their respective divisional Class 1E AC sources. The DTMs and SLUs for ESF 1 and ESF 2 in Divisions I, II, and III are powered from their respective divisional Class 1E DC sources. In SSLC, independence is provided between Class 1E divisions, and also between Class 1E divisions, and also non-Class 1E equipment.

Bypassing of any single division of sensors (i.e., those sensors whose trip status is confirmed by 2–out-of-4 logic) is accomplished from each divisional SSLC cabinet by means of the manually-operated bypass unit. When such bypass is made, all four divisions of 2–out-of-4 input logic become 2–out-of-3 while the bypass state is maintained. During bypass, if any two of the remaining three divisions reach trip level for any sensed input parameter, then the output logic of all four divisions' trips (for RPS and MSIV functions) or the three ECCS divisions initiate the appropriate safety system equipment.

Bypassing of any single division of output trip logic (i.e., taking a logic channel out of service) is also accomplished by means of the bypass unit. This type of bypass is limited to the fail-safe (de-energize-to-operate) reactor trip and MSIV closure functions, since removal of power from energize-to-operate signal processors is sufficient to remove that channel from service.

When a trip logic output bypass is made, the TLU trip output in a division is inhibited from affecting the output load drivers by maintaining that division's load drivers in an energized state. Thus, the 2–out-of-4 logic arrangement of output load drivers for the RPS and MSIV functions effectively becomes 2-out-of-3 while the bypass is maintained.

Bypass status is indicated in the main control room until the bypass condition is removed. An electrical interlock rejects attempts to remove more than one SSLC division from service at a time.

ESF1 and ESF2 logic are each processed in two redundant channels within each divisional train of ESF equipment. In order to prevent spurious actuation of ESF equipment, final output signals are voted 2-out-of-2 at the remote multiplexing units by means of series-connected load drivers at the RMU outputs. However, in the event of a failure detected by self-test within either processing channel, a bypass (ESF output channel bypass) is applied automatically (with manual backup) such that the failed channel is removed from service. The remaining channel provides 1-out-of-1 operation to maintain availability during the repair period. Channel failures are alarmed in the main control room. If a failed channel is not automatically bypassed, the operator is able to manually bypass the channel by a hardwired connection from the main control room.

A portion of the anticipated transient without scram (ATWS) mitigation features is provided by SSLC circuitry, with initiating conditions as follows:

(1) Initiation of automatic Standby Liquid Control System (SLCS) injection: High dome pressure and startup range neutron monitor (SRNM) ATWS permissive for 3 minutes or greater, or low reactor water level and SRNM ATWS permissive for 3 minutes or greater.

(2) Initiation of feedwater runback: High dome pressure and SRNM ATWS permissive for 2 minutes or greater. Reset permitted only when both signals drop below the setpoints.

These ATWS features are implemented in four divisions of SSLC control circuitry that are functionally independent and diverse from the circuitry used for the Reactor Protection System (Figure 3.4c).

SSLC has the following alarms, displays, and controls in the main control room:

(1) SSLC signal processor inoperative (INOP).

(2) SSLC manual controls for bypass as described above.

(3) Displays for bypass status.

(4) Divisional flat display panels that provide display and control capability for manual ESF functions.

(5) Display and control of calibration and off-line self-test functions.

Inspections, Tests, Analyses and Acceptance Criteria

Table 3.4, Items 1 through 6, provides a definition of the inspections, tests and analyses, together with associated acceptance criteria, which will be undertaken for SSLC.

B. I & C Development and Qualification Processes

Hardware and Software Development Process

The ABWR design uses programmable digital equipment to implement operating functions of instrumentation and control (I&C) systems. The equipment is in the form of embedded controllers (i.e., a control program developed in software is permanently stored in PROM, and thus becomes part of the controller's hardware).

A quality assurance program encompassing software is employed as a controlled process for software development, hardware integration, and final product and system testing. The development process for safety-related hardware and software includes a verification and validation (V&V) program. Non-safety-related hardware and software will be developed using a planned design process similar to the safety-related development program, but with periodic design reviews rather than formal V&V.

System functional performance testing for each system using the software-based controllers discussed herein is addressed in Section 2 system entries.

An overall software development plan establishes the requirements and methodology for software design and development. The plan also defines methods for auditing and testing software during the design, implementation, and integration phases. These phases are part of the software life cycle, a planned development method to ensure the quality of software throughout its period of usage. The relationship between components of the plan and I&C design activities is shown in Figure 3.4d.

As part of the design of software for safety-related applications, the software development plan, at each defined phase of the software life cycle, addresses software requirements that have been defined as safety-critical. Safety-critical is defined as those computer software components (processes, functions, values or computer program states) in which errors (inadvertent or unauthorized occurrence, failure to occur when required, occurrence out of sequence, occurrence in combination with other functions,

or erroneous values) can result in a potential hazard or loss of predictability or control of a system. Potential hazards are failure of a safety-related function to occur on demand and spurious occurrence of a safety-related function in an unsafe direction.

The overall software development plan comprises the following plans:

(1) A Software Management Plan (SMP) that establishes standards, conventions and design processes for I&C software.

A SMP shall be instituted which establishes that software for embedded control hardware shall be developed, designed, evaluated, and documented per a design development process that addresses, for safety-related software, software safety issues at each defined life-cycle phase of the software development.

The SMP defines the following software life-cycle phases:

(a) Planning

(b) Design definition

(c) Software design

(d) Software coding

(e) Integration

(f) Validation

(g) Change control

The SMP shall state that the output of each defined life-cycle phase shall be documents that define the current state of that design phase and the design input for the next design phase and the software products are developed using the SMP.

(2) A Configuration Management Plan (CMP) that establishes the standards and procedures controlling software design and documentation.

A CMP shall be instituted that establishes the methods for maintaining, throughout the software design process, the design documentation, procedures, evaluated software, and the resultant as-installed software.

The CMP addresses:

(a) Identification of CMP software documentation.

(b) Management of software change control.

(c) Control and traceability of software changes.

(d) Verification of software to design requirements.

(e) Dedication of commercial software.

(3) A V&V plan that establishes verification reviews and validation testing procedures.

A V&V plan shall be developed which establishes that developed software shall be subjected to structured and documented verification reviews and validation testing, including testing of the software integrated into the target hardware.

The V&V plan addresses:

(a) Independent design verification.

(b) Baseline software reviews.

(c) Testing.

(d) Procedure for software revisions.

Electromagnetic Compatibility

Electromagnetic compatibility (EMC) is the ability of equipment to function properly when subjected to an electromagnetic environment. An EMC compliance plan to confirm the level of immunity to electrical noise is part of the design, installation, and pre-operational testing of I&C equipment.

Electrical and electronic components in the systems listed below are qualified according to the established plan for the anticipated levels of electrical interference at the installed locations of the components:

(1) Safety System Logic and Control.

(2) Essential Multiplexing System.

(3) Non-Essential Multiplexing System.

(4) Other microprocessor-based, software controlled systems or equipment.

The plan is structured on the basis that EMC of I&C equipment is verified by factory testing and site testing of both individual components and interconnected systems to meet electromagnetic compatibility requirements for protection against the effects of:

(1) Electromagnetic Interference (EMI).

(2) Radio Frequency Interference (RFI).

(3) Electrostatic Discharge (ESD).

(4) Electrical surge [Surge Withstand Capability (SWC)].

To be able to predict the degree of electromagnetic compatibility of a given equipment design, the following information is developed:

(1) Characteristics of the sources of electrical noise.

(2) Means of transmission of electrical noise.

(3) Characteristics of the susceptibility of the system.

(4) Techniques to attenuate electrical noise.

After these characteristics of the equipment are identified, noise susceptibility is tested for four different paths of electrical noise entry:

(1) Power feed lines.

(2) Input signal lines.

(3) Output signal lines.

(4) Radiated electromagnetic energy.

Instrument Setpoint Methodology

Setpoints for initiation of safety-related functions are determined, documented, installed and maintained using a process that establishes a general program for:

(1) Specifying requirements for documenting the bases for selection of trip setpoints.

(2) Accounting for instrument inaccuracies, uncertainties, and drift.

(3) Testing of instrumentation setpoint dynamic response.

(4) Replacement of setpoint-related instrumentation.

The determination of nominal trip setpoints includes consideration of the following factors:

Design Basis Analytical Limit

In the case of setpoints that are directly associated with an abnormal plant transient or accident analyzed in the safety analysis, a design basis analytical limit is established as part of the safety analysis. The design basis analytical limit is the value of the sensed process variable prior to or at the point which a desired action is to be initiated. This limit is set so that associated licensing safety limits are not exceeded, as confirmed by plant design basis performance analysis.

Allowable Value

An allowable value is determined from the analytical limit by providing allowances for the specified or expected calibration capability, the accuracy of the instrumentation, and the measurement errors. The allowable value is the limiting value of the sensed process variable at which the trip setpoint may be found during instrument surveillance.

Nominal Trip Setpoint

The nominal trip setpoint value is calculated from the analytical limit by taking into account instrument drift in addition to the instrument accuracy, calibration capability, and the measurement errors. The nominal trip setpoint value is the limiting value of the sensed process variable at which a trip action will be set to operate at the time of calibration.

Signal Processing Devices in the Instrument Channel

Within an instrument channel, there may exist other components or devices that are used to further process the electrical signal provided by the sensor (e.g., analog-to-digital converters, signal conditioners, temperature compensation circuits, and multiplexing and demultiplexing components). The worst-case instrument accuracy, calibration accuracy, and instrument drift contributions of each of these additional signal conversion components are separately or jointly accounted for when determining the characteristics of the entire instrument loop.

Not all parameters have an associated design basis analytical limit (e.g., main steamline radiation monitoring). An allowable value may be defined directly based on plant licensing requirements, previous operating experience or other appropriate criteria. The nominal trip setpoint is then calculated from this allowable value, allowing for instrument drift. Where appropriate, a nominal trip setpoint may be determined directly based on operating experience.

Procedures will be used that provide a method for establishing instrument nominal trip setpoint and allowable value. Because of the general characteristics of the instrumentation and processes involved, two different methods are applied:

(1) Computational

(2) Historical data

The computational method is used when sufficient information is available regarding a dynamic process and the associated instrumentation. The procedure takes into account channel instrument accuracy, calibration accuracy, process measurement accuracy, primary element accuracy, and instrument drift. If the resulting nominal trip setpoint and allowable value are not acceptable when checked to ensure that they will not result in an unacceptable level of trips caused by normal operational transients, then more rigorous statistical evaluation or the use of actual operational data may be considered.

Some setpoint values have been historically established as acceptable, both for regulatory and operational requirements. These setpoints have non-critical functions or are intended to provide trip actions related to gross changes in the process variable. The continued recommendation of these historically accepted setpoint values is another method for establishing nominal trip setpoint and allowable values. This approach is only valid where the governing conditions remain essentially unaltered from those imposed previously and where the historical values have been adequate for their intended functions.

The setpoint methodology plan requires that activities related to instrument setpoints be documented and stored in retrievable, auditable files.

Equipment Qualification (EQ)

Qualification of safety-related instrumentation and control equipment is implemented by a program that assures this equipment is able to complete its safety-related function under the environmental conditions that exist up to and including the time the equipment has finished performing that function. Qualification specifications consider conditions that exist during normal, abnormal, and design basis accident events in terms of their cumulative effect on equipment performance for the time period up to the end of equipment life.

The material discussed herein identifies an EQ program that addresses the spectrum of design basis environmental conditions that may occur in plant areas where I&C equipment is installed. Not all safety-related I&C equipment will experience all of these conditions; the intent is that qualification be performed by selecting the conditions applicable to each particular piece of equipment and performing the necessary qualification.

As-built I&C components are environmentally qualified if they can withstand the environmental conditions associated with design basis events without loss of their safety functions for the time needed to be functional. Safety-related I&C components are designed to continue normal operation after loss of HVAC. The environmental conditions are as follows, as applicable to the bounding design basis events: Expected time-dependent temperature and pressure profiles, humidity, chemical effects, radiation, aging, seismic events, submergence, and synergistic effects which have a significant effect on equipment performance.

I&C equipment environmental qualification is demonstrated through analysis of the environmental conditions that would exist in the location of the equipment during and following a design basis accident and through a determination that the equipment is qualified to withstand those conditions for the time needed is functional. This determination may be demonstrated by:

(1) Type testing of an identical item of equipment under identical or similar conditions with a supporting analysis to show that the equipment to be qualified.

(2) Type testing of a similar item of equipment with a supporting analysis to show that the equipment is qualified.

(3) Experience with identical or similar equipment under similar conditions with a supporting analysis to show that the equipment is qualified.

(4) Analysis in combination with partial type test data that supports the analytical assumptions and conclusions to show that the equipment is qualified.

The installed condition of safety-related I&C equipment is assured by a program whose objective is to verify that the installed configuration is bounded by the test configuration and test conditions.

Inspections, Tests, Analyses and Acceptance Criteria

Table 3.4, Items 7 through 15, provides a definition of the inspections, tests and analyses, together with associated acceptance criteria, which will be used to demonstrate compliance with the above commitments for hardware and software development, electromagnetic compatibility, instrument setpoint methodology, and equipment qualification.

C. Diversity and Defense-in-Depth Considerations

Subsection B discusses processes for developing hardware and software qualification programs that will assure a low probability of occurrence of both random and common-mode system failures for the installed ABWR I&C equipment. However, to address the

concern that software design faults or other initiating events common to redundant, multi-divisional logic channels could disable significant portions of the plant's automatic standby safety functions (the reactor protection system and engineered safety features systems) at the moment when these functions are needed to mitigate an accident, several diverse backup features are provided for the primary automatic logic:

- Manual scram and isolation by the operator in the main control room in response to diverse parameter indications.
- Core makeup water capability from the feedwater system, Control Rod Drive (CRD) System, and condensate system, which are diverse from SSLC and the EMS.
- Availability of manual high pressure injection capability.
- Long term shutdown capability provided in a conventionally hardwired, 2-division, analog Remote Shutdown System (RSS); local displays of process variables in RSS are continuously powered and so are available for monitoring at any time.

Thus, to maintain protection system defense-in-depth in the presence of a postulated worst-case event (i.e., undetected, 4-division common mode failure of protection system communications or logic processing functions in conjunction with a large break LOCA), diversity is provided in the form of hardwired backup of reactor trip, diverse display of important process parameters, defense-in-depth arrangement of equipment, and other equipment diversity as outlined in the following table:

Diverse Backup Support for SSLC Equipment

Diverse Features of Protection System	Functional Diversity in Protection System	Defense-in-Depth Configuration	Equipment Diversity
(1) 2-button scram	H		
(2) Manual division trip	H		
(3) Reactor mode switch placed in shutdown mode.	H		
(4) Manual MSIV closure	H		
(5) ATWS mitigation	D		

Diverse Backup Support for SSLC Equipment (Continued)

Diverse Features of Protection System	Functional Diversity in Protection System	Defense-in-Depth Configuration	Equipment Diversity
(6) Fail-safe RPS and fail-as-is ESF in separate processing channels		D	
(7) Non-Essential Multiplexing System (NEMS) independent and diverse from EMS		D	
(8) OLUs diverse from software-based logic			H
(9) Independent Displays			H
(a) Reactor water level			
(b) Reactor water level low alarm			
(c) Drywell pressure			
(d) Drywell pressure high alarm			
(e) Reactor Water Cleanup System (CUW) isolation valve status			
(f) RCIC stream line isolation valve status			

Diverse Backup Support for SSLC Equipment (Continued)

Diverse Features of Protection System	Functional Diversity in Protection System	Defense-in-Depth Configuration	Equipment Diversity
(g) HPCF flow			
(10) Containment Isolation			H
(a) CUW line inboard isolation valve			
(b) RCIC steam line inboard isolation valve manual initiation			
(11) HPCF manual start in loop C (Division III)			H
(12) RSS with continuous display of monitored process parameters			H

H = Function hardwired (not multiplexed) from sensor or control switch to actuator; control logic, if needed, is diverse from that of the primary protection system.

D = Function uses logic diverse from primary protection system but is not necessarily hardwired.

Diverse equipment can be in the form of digital devices, digital software-based devices, or non-digital as long as these devices are not subject to the same common mode failure as the primary protection system components.

Inspections, Tests, Analyses and Acceptance Criteria

Table 3.4, Item 16, provides a definition of the inspection, tests and analyses, together with associated acceptance criteria, which will be used to demonstrate compliance with the above commitments for diverse backup support SSLC.

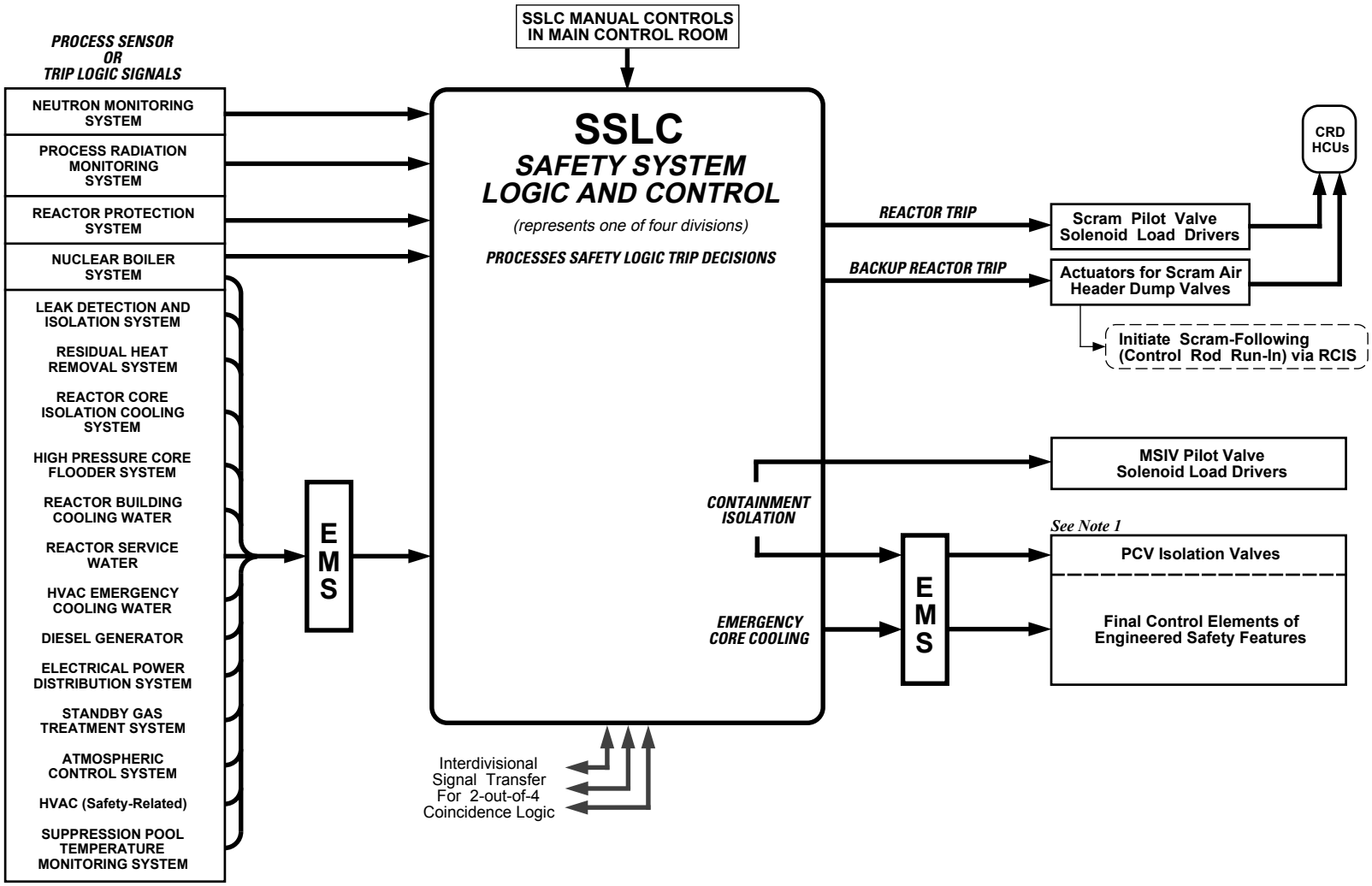

Notes:
1. No PCV isolation trips or ECCS initiation outputs in Division IV.

Figure 3.4a Safety System Logic and Control (SSLC) Control Interface Diagram

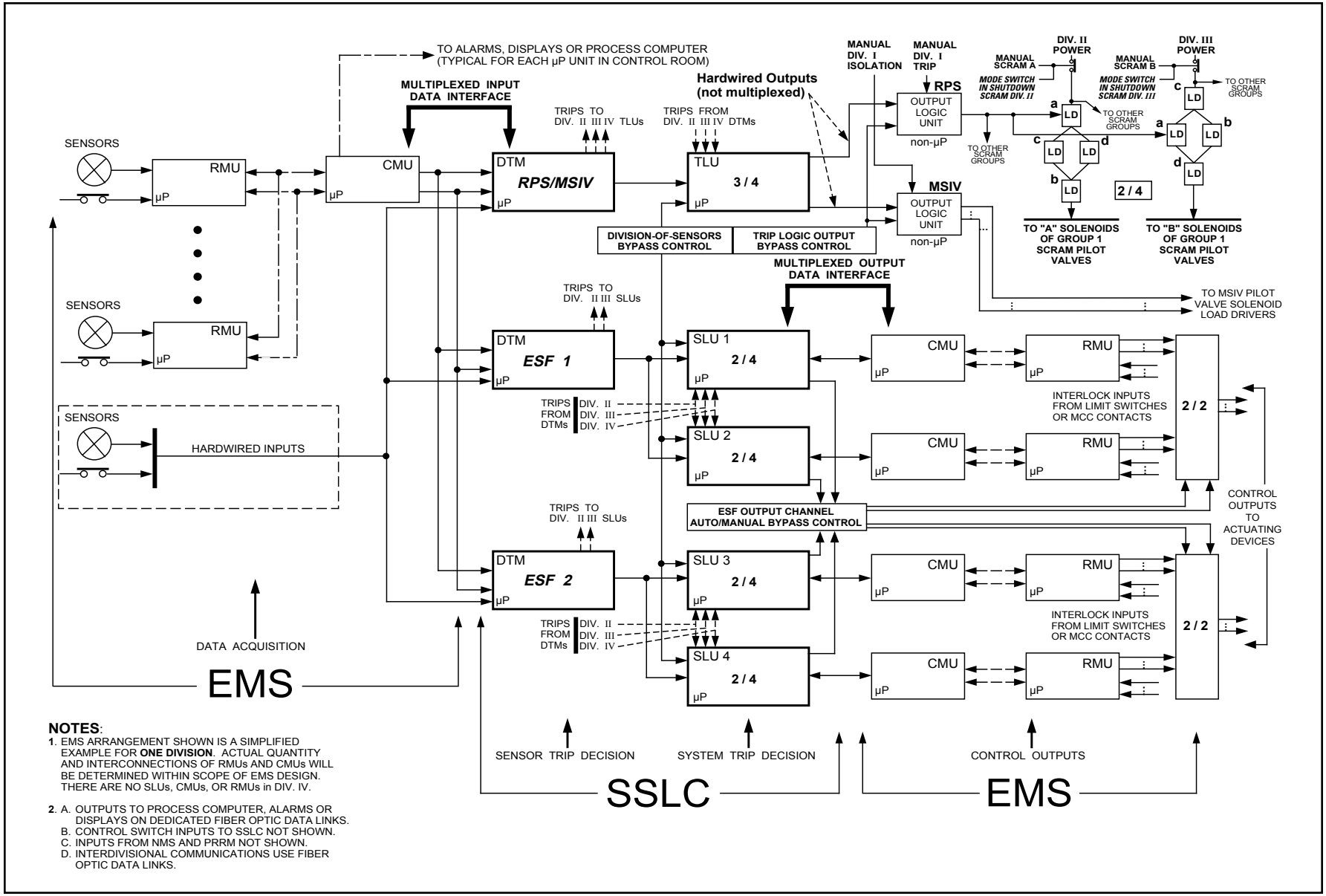

NOTES:

1. EMS ARRANGEMENT SHOWN IS A SIMPLIFIED EXAMPLE FOR **ONE DIVISION**. ACTUAL QUANTITY AND INTERCONNECTIONS OF RMUs AND CMUs WILL BE DETERMINED WITHIN SCOPE OF EMS DESIGN. THERE ARE NO SLUs, CMUs, OR RMUs in DIV. IV.

2. A. OUTPUTS TO PROCESS COMPUTER, ALARMS OR DISPLAYS ON DEDICATED FIBER OPTIC DATA LINKS.
   B. CONTROL SWITCH INPUTS TO SSLC NOT SHOWN.
   C. INPUTS FROM NMS AND PRRM NOT SHOWN.
   D. INTERDIVISIONAL COMMUNICATIONS USE FIBER OPTIC DATA LINKS.

Figure 3.4b Safety System Logic & Control Block Diagram

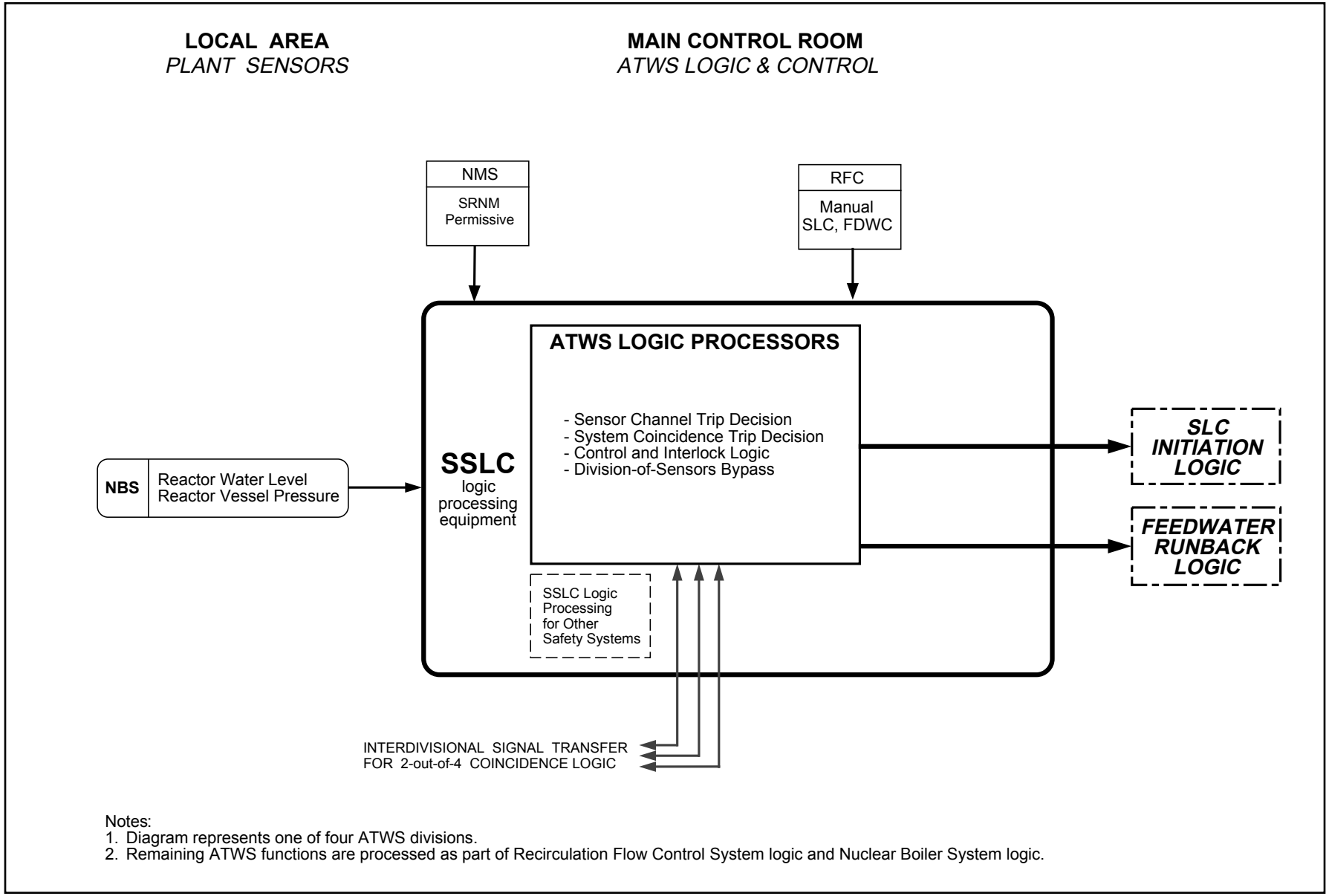

Notes:
1. Diagram represents one of four ATWS divisions.
2. Remaining ATWS functions are processed as part of Recirculation Flow Control System logic and Nuclear Boiler System logic.

Figure 3.4c Anticipated Transient Without Scram (ATWS) Control Interface Diagram

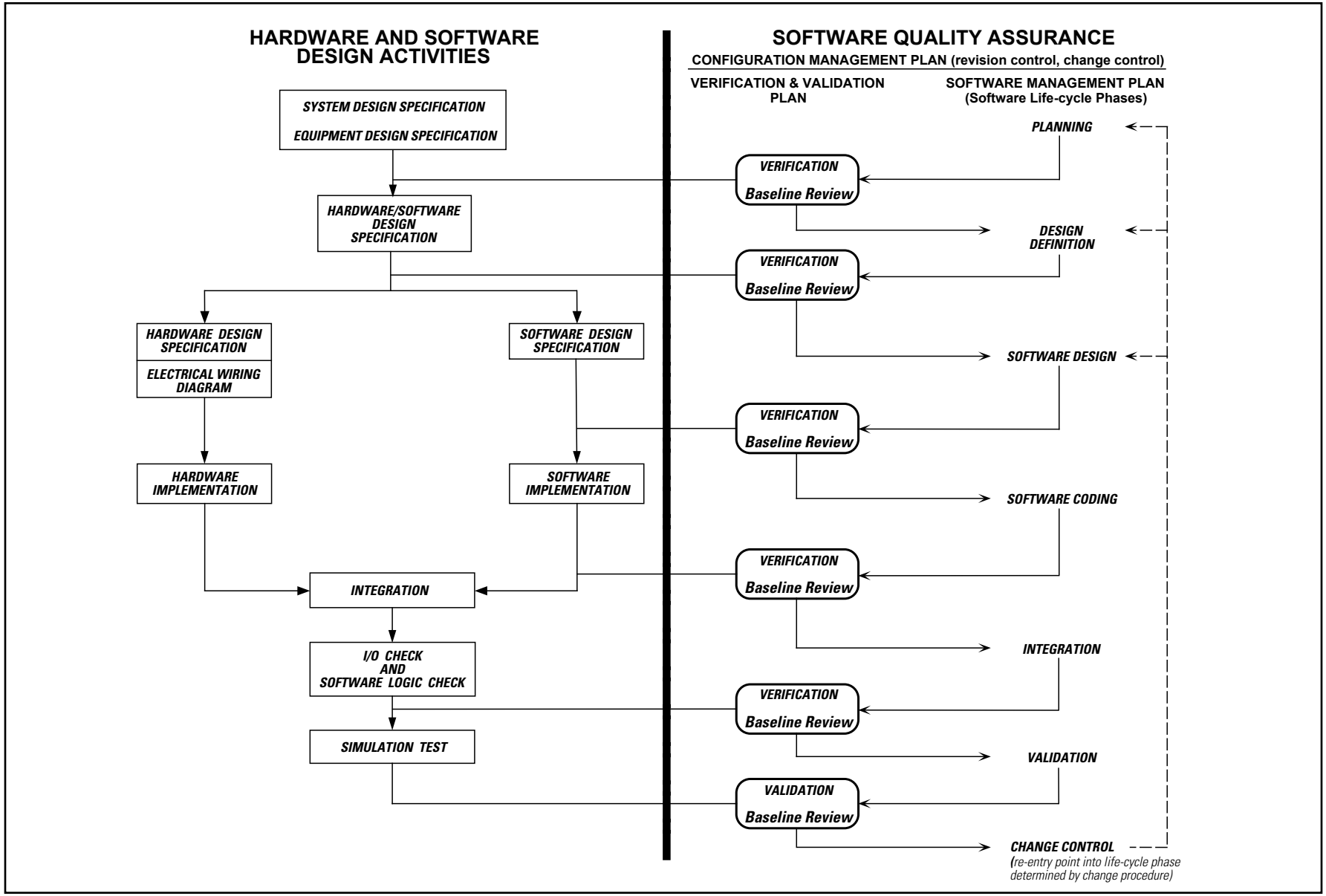

Figure 3.4d Integrated Hardware/Software Development Process

Table 3.4 Instrumentation and Control

Inspections, Tests, Analyses and Acceptance Criteria

Design Commitment	Inspections, Tests, Analyses	Acceptance Criteria
Safety System Logic and Control		
1. The equipment comprising SSLC is defined in Section 3.4(A). The equipment comprising diverse backup support functions for SSLC is defined in Section 3.4 (C).	1. Inspections of the as-built SSLC will be conducted.	1. The as-built SSLC conforms with the description in Section 3.4(A). Diverse backup support equipment for SSLC conforms with the description in Section 3.4 (C).
2. Safety-related monitoring and trip logic for the plant protection systems resides in SSLC equipment. SSLC integrates the automatic decision-making and trip logic functions and manual operator initiation functions associated with the safety actions of the safety-related systems. SSLC generates the protective function signals that activate reactor trip and provide safety-related mitigation of reactor accidents.	2. Tests will be performed on as-installed SSLC using simulated input signals. System outputs will be monitored to determine operability of safety-related functions.	2. A test report exists which concludes that the SSLC design basis performance requirements are met.
3. The DTM, TLU, and OLUs for RPS and MSIV in each of the four instrumentation divisions are powered from their respective divisional Class 1E AC sources. The DTMs and SLUs for ESF 1 and ESF 2 in Divisions I, II, and III are powered from their respective divisional Class 1E DC sources, as are the ESF DTMs in Division IV. In SSLC, independence is provided between Class 1E divisions and between Class 1E divisions and non-Class 1E equipment.	3. a. Tests will be performed on SSLC by providing a test signal to the I&C equipment in only one Class 1E division at a time. b. Inspection of the as-installed Class 1E divisions in SSLC will be performed.	3. a. The test signal exists only in the Class 1E division under test in SSLC. b. In SSLC, physical separation or electrical isolation exists between Class 1E divisions. Physical separation or electrical isolation exists between these Class 1E divisions and non-Class 1E equipment.

Table 3.4 Instrumentation and Control (Continued)

Inspections, Tests, Analyses and Acceptance Criteria		
Design Commitment	**Inspections, Tests, Analyses**	**Acceptance Criteria**
Safety System Logic and Control		
4. SSLC provides the following bypass functions: a. Division-of-sensors bypass b. Trip logic output bypass c. ESF output channel bypass	4. Tests will be performed on the as-built SSLC as follows: a(1) Place one division of sensors in bypass. Apply a trip test signal in place of each sensed parameter that is bypassed. At the same time, apply a redundant trip signal for each parameter in each other division, one division at a time. Monitor the voted trip output at each TLU and SLU. Repeat for each division. a(2) For each division in bypass, attempt to place each other division in division-of-sensors bypass, one at a time.	4. Results of bypass tests are as follows: a(1) No trip change occurs at the voted trip output of each TLU and SLU. Bypass status is indicated in main control room. a(2) Each division not bypassed cannot be placed in bypass, as indicated at OLU output; bypass status in main control room indicates only one division of sensors is bypassed.

Table 3.4 Instrumentation and Control (Continued)

Inspections, Tests, Analyses and Acceptance Criteria		
Design Commitment	**Inspections, Tests, Analyses**	**Acceptance Criteria**
Safety System Logic and Control		
4. (continued)	4. (continued)	4. (continued)
	b(1) Place one division in trip-logic-output bypass. Operate manual auto-trip test switch. Monitor the trip output at the RPS OLU. Operate manual auto-isolation test switch. Monitor the trip output at the MSIV OLU. Repeat for each division.	b(1) No trip change occurs at the trip output of the RPS OLU or MSIV OLU, respectively. Bypass status is indicated in main control room.
	b(2) For each division in bypass, attempt to place the other divisions in trip-logic-output bypass, one at a time.	b(2) Each division not bypassed cannot be placed in bypass, as indicated at OLU output; bypass status in main control room indicates only one trip logic output is bypassed.
	c(1) Apply common test signal to any one pair of dual-SLU signal inputs. Monitor test signal at voted 2-out-of-2 output in RMU area. Remove power from one SLU, restore power, then remove power from other SLU. Repeat test for all pairs of dual SLUs in each division.	c(1) Monitored test output signal does not change state when power is removed from either SLU. Bypass status and loss of power to SLU are indicated in main control room.
	c(2) Disable auto-bypass circuit in bypass unit. Repeat test c(1), but operate manual ESF loop bypass switch for each affected loop.	c(2) Monitored test output signal is lost when power is removed from either SLU, but is restored when manual bypass switch is operated. Bypass status, auto-bypass inoperable, and loss of power to SLU are indicated in main control room.

Table 3.4 Instrumentation and Control (Continued)

Inspections, Tests, Analyses and Acceptance Criteria		
Design Commitment	**Inspections, Tests, Analyses**	**Acceptance Criteria**
Safety System Logic and Control		
5. A portion of the anticipated transient without scram (ATWS) mitigation features is provided by SSLC circuitry, with initiating conditions as follows: a. Initiation of automatic SLCS injection on high dome pressure and SRNM ATWS permissive for 3 minutes or greater, or low reactor water level and SRNM ATWS permissive for 3 minutes or greater. b. Initiation of feedwater runback on high dome pressure and SRNM ATWS permissive for 2 minutes or greater. Reset is permitted only when both signals drop below the setpoints.	5. Tests will be conducted using simulated input signals for the process variables used by the ATWS logic. For feedwater runback logic, reset attempts will be made before initiating test signals drop below setpoints.	5. Four redundant output signals occur for each of the following ATWS mitigating functions (one set in each of the four divisions of ATWS outputs) that lead to initiation of these functions: a. Initiation of automatic SLCS injection on high dome pressure and SRNM ATWS permissive for 3 minutes or greater, or low reactor water level and SRNM ATWS permissive for 3 minutes or greater. b. Initiation of feedwater runback on high dome pressure and SRNM ATWS permissive for 2 minutes or greater. Reset is permitted only when both signals drop below the setpoints.
6. Main control room alarms, displays and controls provided for SSLC are as defined in Section 3.4.	6. Inspections will be performed on the main control room alarms, displays and controls for SSLC	6. Alarms, displays and controls exist or can be retrieved in the main control room as defined in Section 3.4.

Table 3.4 Instrumentation and Control (Continued)

Inspections, Tests, Analyses and Acceptance Criteria		
Design Commitment	**Inspections, Tests, Analyses**	**Acceptance Criteria**
Hardware/Software Development		
7. A quality assurance program encompassing software is employed as a controlled process for software development hardware integration, and final product and system testing.	7. The program for quality assurance that encompasses software shall be reviewed.	7. A quality assurance program is in place that defines controlled processes for software development, hardware integration, and final product and system testing. As a minimum, the program requires a Software Management Plan, Configuration Management Plan and Verification and Validation Plan as described in the following items.
8. A Software Management Plan (SMP) shall be instituted which establishes that software for embedded control hardware shall be developed, designed, evaluated, and documented per a design development process that addresses, for safety-related software, software safety issues at each defined life-cycle phase of the software development. The SMP shall state that the output of each defined life-cycle phase shall be documents that define the current state of that design phase and the design input for the next design phase.	8. The Software Management Plan shall be reviewed.	8. The Software Management Plan shall define: a. The organization and responsibilities for development of the software design; the procedures to be used in the software development; the interrelationships between software design activities; and the methods for conducting software safety analyses. b. That the software safety analyses to be conducted for safety-related software applications shall: (1) Identify software requirements having safety-related implications. (2) Document the identified safety-critical software requirements in the software requirements specification for the design.

Table 3.4 Instrumentation and Control (Continued)

Inspections, Tests, Analyses and Acceptance Criteria		
Design Commitment	**Inspections, Tests, Analyses**	**Acceptance Criteria**
Hardware/Software Development		
8. (continued)	8. (continued)	8b. (continued) (3) Incorporate into the software design the safety-critical software functions specified in the software requirements specification. (4) Identify in the coding and test of the developed software, those software modules which are safety-critical. (5) Evaluate the performance of the developed safety-critical software modules when operated within the constraints (including the effects of potential unintended functions) imposed by the established system requirements, software design, and computer hardware requirements. (6) Evaluate software interfaces of safety-critical software modules. (7) Perform equipment integration and validation testing that demonstrate that safety-related functions identified in the design input requirements are operational.

Table 3.4 Instrumentation and Control (Continued)

Inspections, Tests, Analyses and Acceptance Criteria		
Design Commitment	**Inspections, Tests, Analyses**	**Acceptance Criteria**
Hardware/Software Development		
8. (continued)	8. (continued)	8. (continued) c. The software engineering process, which is composed of the following life-cycle phases: (1) Planning (2) Design Definition (3) Software Design (4) Software Coding (5) Integration (6) Validation (7) Change control d. The Planning phase design activities, which shall address the following system design requirements and software development plans: (1) Software Management Plan. (2) Software Configuration Management Plan. (3) Verification and Validation Plan. (4) Equipment design requirements. (5) Safety analysis of design requirements. (6) Disposition of design and/or documentation nonconformances identified during this phase.

Table 3.4 Instrumentation and Control (Continued)

Inspections, Tests, Analyses and Acceptance Criteria		
Design Commitment	**Inspections, Tests, Analyses**	**Acceptance Criteria**
Hardware/Software Development		
8. (continued)	8. (continued)	8. (continued) e. The Design Definition phase design activities, which shall address the development of the following implementing equipment design and configuration requirements: (1) Equipment schematic. (2) Equipment hardware and software performance specification. (3) Equipment user's manual. (4) Data communications protocol, including timing analysis and test methods. (5) Safety analysis of the developed design definition. (6) Disposition of design and/or documentation nonconformances identified during this phase.

Table 3.4 Instrumentation and Control (Continued)

Inspections, Tests, Analyses and Acceptance Criteria		
Design Commitment	**Inspections, Tests, Analyses**	**Acceptance Criteria**
Hardware/Software Development		
8. (continued)	8. (continued)	8. (continued) f. The Software Design phase, which shall address the design of the software architecture and program structure elements, and the definition of software module functions: (1) Software Design Specification. (2) Safety analysis of the software design. (3) Disposition of design and/or documentation nonconformances identified during this phase. g. The Software Coding phase, which shall address the following software coding and testing activities of individual software modules: (1) Software source code. (2) Software module test reports. (3) Safety analysis of the software coding. (4) Disposition of nonconformances identified in this phase's design documentation and test results.

Table 3.4 Instrumentation and Control (Continued)

Inspections, Tests, Analyses and Acceptance Criteria		
Design Commitment	**Inspections, Tests, Analyses**	**Acceptance Criteria**
Hardware/Software Development		
8. (continued)	8. (continued)	8. (continued) h. The Integration phase, which shall address the following equipment testing activities that evaluate the performance of the software when installed in hardware prototypical of that defined in the Design Definition phase: (1) Integration test reports. (2) Safety analysis of the integration test results. (3) Disposition of nonconformances identified in this phase's design documentation and test results. i. The Validation phase, which comprises the development and implementation of the following documented test plans and procedures: (1) Validation test plans and procedures. (2) Validation test reports. (3) Description of as-tested software. (4) Safety analysis of the validation test results. (5) Disposition of nonconformances identified in this phase's design documentation and test results

Table 3.4 Instrumentation and Control (Continued)

Inspections, Tests, Analyses and Acceptance Criteria		
Design Commitment	**Inspections, Tests, Analyses**	**Acceptance Criteria**
Hardware/Software Development		
8. (continued)	8. (continued)	8i. (continued) (6) Software change control procedures. j. The Change Control phase, which begins with the completion of validation testing, and addresses changes to previously validated software and the implementation of the established software change control procedures.
9. A Configuration Management Plan (CMP) shall be instituted that establishes the methods for maintaining, throughout the software design process, the design documentation, procedures, evaluated software, and the resultant as-installed software.	9. The Configuration Management Plan shall be reviewed.	9. The Configuration Management Plan shall define: a. The specific product or system scope to which it is applicable. b. The organizational responsibilities for software configuration management. c. Methods to be applied to: (1) Identify design interfaces. (2) Produce software design documentation. (3) Process changes to design interface documentation and software design documentation.

Table 3.4 Instrumentation and Control (Continued)

Inspections, Tests, Analyses and Acceptance Criteria		
Design Commitment	**Inspections, Tests, Analyses**	**Acceptance Criteria**
Hardware/Software Development		
9. (continued)	9. (continued)	9c. (continued) (4) Process corrective actions to resolve deviations identified in software design and design documentation, including notification to end user of errors discovered in software development tools or other software. (5) Maintain status of design interface documentation and developed software design documentation. (6) Designate and control software revision status. Such methods shall require that software code listings present direct indication of the software code revision status. d. Methods for, and the sequencing of, reviews to evaluate the compliance of software design activities with the requirements of the CMP. e. The configuration management of tools (such as compilers) and software development procedures. f. Methods for the dedication of commercial software for safety-related usage.

Table 3.4 Instrumentation and Control (Continued)

Inspections, Tests, Analyses and Acceptance Criteria		
Design Commitment	**Inspections, Tests, Analyses**	**Acceptance Criteria**
Hardware/Software Development		
9. (continued)	9. (continued)	9. (continued) g. Methods for tracking error rates during software development, such as the use of software metrics. h. The methods for design record collection and retention.
10. A Verification and Validation Plan (V&VP) shall be developed which establishes that developed software shall be subjected to structured and documented verification reviews and validation testing, including testing of the software integrated into the target hardware.	10. The Verification and Validation Plan shall be reviewed.	10. The Verification and Validation Plan shall define: a. That baseline reviews of the software development process are to be conducted during each phase of the software development life cycle. b. The scope and methods to be used in the baseline reviews to evaluate the implemented design, design documentation, and compliance with the requirements of the Software Management Plan and Configuration Management Plan. c. The requirements for use of commercial software and commercial development tools for safety-related applications and that such use is a controlled and documented procedure.

Table 3.4 Instrumentation and Control (Continued)

Inspections, Tests, Analyses and Acceptance Criteria		
Design Commitment	**Inspections, Tests, Analyses**	**Acceptance Criteria**
Hardware/Software Development		
10. (continued)	10. (continued)	10. (continued) d. That verification shall be performed as a controlled and documented evaluation of the conformity of the developed design to the documented design requirements at each phase of baseline review. e. That validation shall be performed through controlled and documented testing of the developed software as installed in the target hardware that demonstrates compliance of the software with the software requirements specifications and compliance of the device(s) under test with the system design specifications. f. That for safety-related software, verification reviews and validation testing are to be conducted by personnel who are knowledgeable in the technologies and methods used in the design, but who did not develop the software design to be reviewed and tested.

Table 3.4 Instrumentation and Control (Continued)

Inspections, Tests, Analyses and Acceptance Criteria		
Design Commitment	**Inspections, Tests, Analyses**	**Acceptance Criteria**
Hardware/Software Development		
10. (continued)	10. (continued)	10. (continued) g. That for safety-related software, design verification reviews shall be conducted as part of the baseline reviews of the design material developed during the Planning through Integration phases of the software development life-cycle (as defined in Criterion 8b, above), and that validation testing shall be conducted as part of the baseline review of the Validation phase of the software development life-cycle. h. That validation testing shall be conducted per a documented test plan and procedure. i. That for non-safety-related software development, verification and validation shall be performed through design reviews conducted as part of the baseline reviews completed at the end of the phases in the software development life cycle. These design reviews shall be performed by personnel knowledgeable in the technologies and methods used in the design development.

Table 3.4 Instrumentation and Control (Continued)

Inspections, Tests, Analyses and Acceptance Criteria		
Design Commitment	**Inspections, Tests, Analyses**	**Acceptance Criteria**
Hardware/Software Development		
10. (continued)	10. (continued)	10. (continued) j. The products which shall result from the baseline reviews conducted at each phase of the software development life-cycle; and that the defined products of the baseline reviews and the V&V Plan shall be documented and maintained under configuration management. k. The methods for identification, closure, and documentation of design and/or design documentation nonconformances. l. That the software development is not complete until the specified V&V activities are complete and design documentation is consistent with the developed software.
11. Software development shall be performed in accordance with the software management plan, configuration management plan, and V&V plan.	11. Review software development results.	11. Software development has been completed as defined in the SMP, CMP, and V&V plan. Noncompliance with the SMP, CMP, and V&V plan may occur during implementation of these plans, provided that corrective action is taken for any such noncompliances.

Table 3.4 Instrumentation and Control (Continued)

Inspections, Tests, Analyses and Acceptance Criteria		
Design Commitment	**Inspections, Tests, Analyses**	**Acceptance Criteria**
Electromagnetic Compatibility		
12. Electrical and electronic components in the systems listed below are qualified for the anticipated levels of electrical interference at the installed locations of the components according to an established plan: a. Safety System Logic and Control b. Essential Multiplexing System c. Non-Essential Multiplexing System d. Other microprocessor-based, software controlled systems or equipment The plan is structured on the basis that electromagnetic compatibility (EMC) of I&C equipment is verified by factory testing and site testing of both individual components and interconnected systems to meet EMC requirements for protection against the effects of: a. Electromagnetic Interference (EMI) b. Radio Frequency Interference (RFI) c. Electrostatic Discharge (ESD) d. Electrical surge [Surge Withstand Capability (SWC)]	12. The EMC compliance plan will be reviewed.	12. An EMC compliance plan is in place. The plan requires, for each system qualified, system documentation that includes confirmation of component and system testing for the effects of high electrical field conditions and current surges. As a minimum, the following information is documented in a qualification file and subject to audit: a. Expected performance under test conditions for which normal system operation is to be ensured. b. Normal electrical field conditions at the locations where the equipment must perform as above. c. Testing methods used to qualify the equipment, including: (1) Types of test equipment. (2) Range of normal test conditions. (3) Range of abnormal test conditions for expected transient environment.

Table 3.4 Instrumentation and Control (Continued)

Inspections, Tests, Analyses and Acceptance Criteria		
Design Commitment	**Inspections, Tests, Analyses**	**Acceptance Criteria**
Electromagnetic Compatibility		
12. (continued)	12. (continued)	12.(continued) (4) Location of testing and exact configuration of tested components and systems, including interconnecting cables, connections to electrical power distribution system, and connections to interfacing devices used during normal plant operation. d. Test results that show the component or system is qualified for its application and remains qualified after being subjected to the range of normal and abnormal test conditions specified above. The plan establishes separate test regimes for each element of EMC, using the following approaches: a. EMI and RFI Protection. An EMC compliance plan for each component or system identified in the design commitment includes tests to ensure that equipment performs its functions in the presence of the specified EMI/RFI electrical noise environment, including the low range of the EMI spectrum, without equipment damage, spurious actuation, or inhibition of functions.

Table 3.4 Instrumentation and Control (Continued)

Inspections, Tests, Analyses and Acceptance Criteria		
Design Commitment	**Inspections, Tests, Analyses**	**Acceptance Criteria**
Electromagnetic Compatibility		
12. (continued)	12. (continued)	12a. (continued) As part of the pre-operational test program, the EMC compliance plan calls for each system to be subjected to EMI/RFI testing. Tests cover potential EMI and RFI susceptibility over four different paths: (1) Power feed lines (2) Input signal lines (3) Output signal lines (4) Radiation The test program includes sensitivity of components identified in the design commitment to radiation from plant communication transmitters and receivers. b. ESD Protection. An EMC compliance plan for each component or system identified in the design commitment includes tests to ensure that equipment performs its functions in the presence of the specified ESD environment without equipment damage, spurious actuation, or inhibition of functions.

Table 3.4 Instrumentation and Control (Continued)

Inspections, Tests, Analyses and Acceptance Criteria		
Design Commitment	**Inspections, Tests, Analyses**	**Acceptance Criteria**
Electromagnetic Compatibility		
12. (continued)	12. (continued)	12b. (continued) The plan is structured on the basis that ESD protection is confirmed by factory tests that determine the susceptibility of instrumentation and control equipment to electrostatic discharges. The EMC compliance plan includes standards, conventions, design considerations, and test procedures to ensure ESD protection of the plant instrumentation and control equipment. The plan requires test documentation confirming that, for each component tested, the following conditions have been met: (1) No change in output signal status was observed during the test. (2) The equipment performed its normal functions after the test.

Table 3.4 Instrumentation and Control (Continued)

Inspections, Tests, Analyses and Acceptance Criteria		
Design Commitment	**Inspections, Tests, Analyses**	**Acceptance Criteria**
Electromagnetic Compatibility		
12.(continued)	12. (continued)	c. SWC Protection. An EMC compliance plan for each component or system identified in the design commitment includes tests to ensure that equipment performs its functions for the specified SWC environment without equipment damage, spurious actuation, or inhibition of functions. The EMC compliance plan includes standards, conventions, design considerations, and test procedures to ensure SWC protection of the plant instrumentation and control equipment. The plan is structured on the basis that SWC protection is confirmed by factory tests that determine the surge withstand capability of the plant instrumentation and control equipment. The plan documents the level of compliance of each system with the grounding and shielding practices of the standards specified under this certified design commitment.

Table 3.4 Instrumentation and Control (Continued)

Inspections, Tests, Analyses and Acceptance Criteria		
Design Commitment	**Inspections, Tests, Analyses**	**Acceptance Criteria**
Setpoint Methodology		
13. Setpoints for initiation of safety-related functions are determined, documented, installed and maintained using a process that establishes a plan for: a. Specifying requirements for documenting the bases for selection of trip setpoints. b. Accounting for instrument inaccuracies, uncertainties, and drift. c. Testing of instrumentation setpoint dynamic response. d. Replacement of setpoint-related instrumentation. The setpoint methodology plan requires that activities related to instrument setpoints be documented and stored in retrievable, auditable files.	13. Inspections will be performed of the setpoint methodology plan used to determine, document, install, and maintain instrument setpoints.	13. The setpoint methodology plan is in place. The plan generates requirements for: a. Documentation of data, assumptions, and methods used in the bases for selection of trip setpoints. b. Consideration of instrument channel inaccuracies (including those due to analog-to-digital converters, signal conditioners, temperature compensation circuits, and multiplexing and demultiplexing components), instrument calibration uncertainties, instrument drift, and uncertainties due to environmental conditions (temperature, humidity, pressure, radiation, EMI, power supply variation), measurement errors, and the effect of design basis event transients are included in determining the margin between the trip setpoint and the safety limit. c. The methods used for combining uncertainties. d. Use of written procedures for preoperational testing and tests performed to satisfy the Technical Specifications.

Table 3.4 Instrumentation and Control (Continued)

Inspections, Tests, Analyses and Acceptance Criteria		
Design Commitment	**Inspections, Tests, Analyses**	**Acceptance Criteria**
Setpoint Methodology		
13. (continued)	13. (continued)	13. (continued) e. Documented evaluation of replacement instrumentation which is not identical to the original equipment.
14. Qualification of safety-related I&C equipment is implemented by a program that assures this equipment is able to complete its safety-related function under the environmental conditions that exist up to and including the time the equipment has finished performing that function. Qualification specifications consider conditions that exist during normal, abnormal, and design basis accident events in terms of their cumulative effect on equipment performance for the time period up to the end of equipment life.	14. A review will be conducted of the equipment qualification program.	14. An I&C equipment qualification program is in place. Documentation for the I&C EQ program is recorded in a product qualification file that includes a list of safety-related I&C equipment accompanied by the following I&C equipment information: a. Performance specifications under conditions existing during and after design basis accidents. These include voltage, frequency, load, and other electrical characteristics that assure specified equipment performance. b. Environmental conditions at the location where the equipment is installed. These conditions include: (1) Number and /or duration of equipment functional and test cycles/events. (2) Process fluid conditions (where applicable to the I&C equipment)

Table 3.4 Instrumentation and Control (Continued)

Inspections, Tests, Analyses and Acceptance Criteria		
Design Commitment	**Inspections, Tests, Analyses**	**Acceptance Criteria**
Equipment Qualification		
14. (continued)	14. (continued)	14. (continued) (3) Voltage, frequency, load, and other electrical characteristics of the equipment. (4) Dynamic loads associated with seismic events. (5) Dynamic loads associated with hydrodynamic conditions. (6) System transients and other vibration inducing events. (7) Pressure, temperature, humidity. (8) Chemical and radiation environments. (9) Electromagnetic compatibility (10) Aging. (11) Submergence (if any). (12) Consideration of synergistic effects that have significant effect on equipment performance. (13) Consideration of margins for unquantified uncertainty. c. One (or a combination) of the following testing methods used to qualify the equipment:

Table 3.4 Instrumentation and Control (Continued)

Inspections, Tests, Analyses and Acceptance Criteria		
Design Commitment	**Inspections, Tests, Analyses**	**Acceptance Criteria**
Equipment Qualification		
14. (continued)	14. (continued)	14.(continued) (1) Type testing of an identical item of equipment under identical or similar conditions with a supporting analysis to show that the equipment to be qualified is acceptable. (2) Type testing of a similar item of equipment with a supporting analysis to show that the equipment to be qualified is acceptable. (3) Experience with identical or similar equipment under similar conditions with a supporting analysis to show that the equipment to be qualified is acceptable. (4) Analysis in combination with partial type test data that supports the analytical assumptions and conclusions. d. Documented results of the qualification that show the equipment performs its safety function when subjected to the conditions predicted to be present when it must perform its safety function up to the end of its qualified life.

Table 3.4 Instrumentation and Control (Continued)

Inspections, Tests, Analyses and Acceptance Criteria		
Design Commitment	**Inspections, Tests, Analyses**	**Acceptance Criteria**
Equipment Qualification		
15. A program exists whose objective is to verify that the installed configuration of safety-related I&C equipment is bounded by the test configuration and test conditions or that an analysis exists which concludes that any differences will not affect the safety function of the I&C equipment.	15. A review will be conducted of the program established for as-built verification of safety-related I&C equipment.	15. A program for as-built verification of safety-related I&C equipment is in place and contains requirements for a documented evaluation that the installed configuration is bounded by the test configuration and conditions or that an analysis exists which concludes that any differences will not affect the safety function of the I&C equipment.
16. Diversity is provided, as described in Section 3.4C, in the form of hardwired backup of reactor trip, diverse display of important process parameters, defense-in-depth arrangement of equipment, and equipment diversity.	16. a. Tests will be performed using simulated input signals for items 5, 9, and 11 in Section 3.4C. For items 9 and 11 only, turn off power to SSLC equipment in four divisions. b. Inspection of the as-installed configuration of items 1,2, 3, 4, 6, 7, 8, 10, and 12 in Section 3.4C, will be performed.	16. a. Item 5, Section 3.4C: Refer to Item 4 of Table 3.4 for results of ATWS tests. Item 9, Section 3.4C: Each independent display indicates its specified parameter or responds to its specified alarm setpoint as tabulated in Section 3.4C. Item 11, Section 3.4C: HPCF system initiation signals that duplicate those produced by SSLC are produced at the outputs of the hardwired, diverse signal path. b. The features listed as items 1, 2, 3, 4, 6, 7, 8, 10, and 12 in Section 3.4C, are implemented as hardwired, diverse, and independent of SSLC, as specified in the table.

3.5 Initial Test Program

Design Description

The ABWR Initial Test Program (ITP)is a program that will be conducted following completion of construction and construction-related inspections and tests and extends to commercial operation. The test program will be composed of preoperational and startup test phases. The general objective of the ITP is to confirm that performance of the as-built facility is in compliance with the design characteristics used for SSAR safety evaluations.

The preoperational test phase of the ITP will consist of those test activities conducted prior to fuel loading. Preoperational testing will be conducted to demonstrate proper performance of structures, systems, components, and design features in the assembled plant. Tests will include, as appropriate, logic and interlocks test, control and instrumentation functional tests, equipment functional tests, system operational test, and system vibration and expansion measurements.

The startup test phase of the ITP will begin with fuel loading and extends to commercial operation. The primary objective of the startup phase testing will be to confirm integrated plant performance with the nuclear fuel in the reactor pressure vessel and the plant at various power levels. Startup phase testing will be conducted at five test conditions during power ascension: open vessel, heatup, low power, mid-power, and high power. The following tests will be conducted during power operation testing:

(1) Core performance analysis.

(2) Steady-state testing.

(3) Control system tuning and demonstration.

(4) Minor and major transients.

Testing during all phases of the ITP will be conducted using step by step written procedures to control the conduct of each test. Such test procedures will delineate established test methods and applicable acceptance criteria. The test procedures will be developed from preoperational and startup test specifications. Approved test procedures will be made available to the NRC approximately 60 days prior to their intended use for preoperational tests and 60 days prior to scheduled fuel loading for startup phase tests. The preoperational and startup test specifications will also be made available to the NRC. Administratively, the ITP will be controlled in accordance with a startup administrative manual. This manual will contain the administrative requirements that govern the conduct of test program, review, evaluation and approval of test results, and test records retention.

Inspections, Tests, Analyses and Acceptance Criteria

This section represents a commitment that combined operating license applicants referencing the certified design will implement an ITP that meets the objectives presented above. Inspections, tests, analyses and acceptance criteria (ITAAC) aimed at verification of ITP implementation are neither necessary nor required.

3.6 Design Reliability Assurance Program

Design Description

The Design Reliability Assurance Program (D-RAP) is a program that will be performed during the detailed design and equipment specification phase prior to initial fuel load. The D-RAP evaluates and prioritizes the structures, systems and components (SSCs) in the design, based on their degree of risk significance. The D-RAP will identify the dominant failure modes for the risk-significant SSCs. The D-RAP will also identify the key assumptions and risk insights for the risk-significant SSCs.

The D-RAP scope includes risk-significant SSCs as determined by probabilistic, deterministic, or other methods used for design certification to identify and prioritize risk-significant SSCs.

The D-RAP purpose is to provide reasonable assurance that the plant design proceeds in a manner that is consistent with the original bases and design assumptions for the risk insights for the risk-significant SSCs.

The D-RAP objectives are to provide reasonable assurance that the plant is designed such that: (1) it is consistent with the assumptions and risk insights for these risk-significant SSCs, (2) the risk-significant SSCs will not degrade to an unacceptable level during their design life, (3) the frequency of transients that challenge these SSCs will be acceptably low, and (4) these SSCs will function reliably when challenged.

Inspections, Tests, Analyses and Acceptance Criteria

Table 3.6 provides a definition of the inspections, tests, analyses, and associated acceptance criteria, which will be performed for Advanced Boiling Water Reactor (ABWR) D-RAP.

Table 3.6 Design Reliability Assurance Program

Inspections, Tests, Analyses and Acceptance Criteria		
Design Commitment	**Inspections, Tests, Analyses**	**Acceptance Criteria**
1. The Design Reliability Assurance Program (D-RAP) includes: scope, purpose, objectives; the process used to evaluate and prioritize the structures, systems and components (SSCs); and the list of SSCs designated as risk-significant. For those SSCs designated as risk-significant, the process used to determine dominant failure modes considered industry experience, analytical models, and applicable requirements. Also, for those SSCs designated as risk-significant, the key assumptions and risk insights considered operations, maintenance, and monitoring activities.	1. Inspections of the design reliability assurance program will be conducted.	1. a. Documentation exists that describes the scope, purpose, and objectives of D-RAP used during plant design, and concludes that the detailed design of risk-significant SSCs is consistent with the D-RAP Design Description. b. Documentation exists and concludes that the process (probabilistic, deterministic, or other methods) used to evaluate and prioritize the SSCs in the design is based on the risk–significance of the SSCs. c. A list of SSCs exists that is based on the risk-significance of SSCs. d. For those SSCs designated as risk significant: i) Documentation exists and concludes that the process to determine dominant failure modes considered industry experience, analytical models, and applicable requirements. ii) Documentation exists and concludes that the key assumptions and risk insights from probabilistic, deterministic, or other methods considered operations, maintenance, and monitoring activities.

4.0 Interface Requirements

The interface requirements defined in this section are similar in nature to the Design Commitments identified in the tables of Inspections, Tests, Analyses, and Acceptance Criteria (ITAAC) provided in Section 2.0 above. In particular, the following matters are addressed in one or more of the interface requirements: supply of cooling and makeup water, heat removal for water-cooled systems, separation and independance of divisions, Remote Shutdown System (RSS) controls for system operation, seismic capability, criteria for electrical power systems monitors, automatic initiation of system operation, and flood limiting features. Each of these design features/design characteristics is also discussed in one or more of the Design Commitments and their corresponding ITAAC in Section 2.0.

An applicant for a combined operating license (COL) that references the ABWR Certified Design must provide design features or characteristics that comply with the interface requirements for the ABWR design and ITAAC for the site-specific portions of the facility design, in accordance with 10 CFR 52.79 (c). Because the interface requirements for the ABWR design are similar to the ABWR Design Descriptions in Section 2.0, for which ITAAC have been developed, compliance with the interface requirements is verifiable through inspection, testing, or analysis. Therefore,there is justification that a COL applicant will be able to develop ITAAC to verify compliance with the design features or characteristics that implement the interface requirements.

4.1 Ultimate Heat Sink

Interface Requirements

The Ultimate Heat Sink (UHS)removes the heat load of the Reactor Service Water (RSW) System during of plant operation. The UHS is not within the Certified Design. The UHS will meet the following requirements:

(1) Provide cooling water to the RSW System for normal plant operation and to permit safe shutdown and cooldown of the plant and maintain the plant in a safe shutdown condition for design basis events.

(2) Makeup water for the UHS shall not be required for at least 30 days following a design basis accident.

(3) Any active safety-related system, structure, or components within the UHS shall have three divisions powered by their respective Class 1E divisions. Each division shall be physically separated and electrically independent of the other divisions.

(4) UHS System Divisions A and B components shall have control interfaces with the Remote Shutdown System (RSS) as required to support UHS operation during RSS design basis conditions.

(5) Be classified as Seismic Category I.

4.2 Offsite Power System

Interface Requirements

No entry. Covered in Section 2.12.1.

4.3 Makeup Water Preparation System

Interface Requirements

The Makeup Water Preparation (MWP) System provides makeup water to the plant via the Makeup Water (purified) (MUWP) System and the Potable and Sanitary Water System. The MWP System is not within the Certified Design. A site-specific MWP System will be designed for any facility which has adopted the Certified Design to provide demineralized water to the MUWP System.

4.4 Potable and Sanitary Water System

Interface Requirements

Covered in Section 2.11.23.

4.5 Reactor Service Water System

Interface Requirements

No entry. Covered in Section 2.11.9.

4.6 Turbine Service Water System

Interface Requirements

Covered in Section 2.11.10.

4.7 Communication System

Interface Requirements

Covered in Section 2.12.16.

4.8 Site Security

Provisions for site security are not within the Certified Design and will be provided by each licensee on a site-specific basis.

4.9 Circulating Water System

Covered in Section 2.10.23.

4.10 Heating, Ventilating and Air Conditioning System

Covered in Section 2.15.5.

5.0 Site Parameters

This section provides a definition of the site parameters used as the basis for the Certified Design.

Table 5.0 ABWR Site Parameters

Maximum Ground Water Level:
61.0 cm below grade

Maximum Flood (or Tsunami) Level:
30.5 cm below grade

Precipitation (for Roof Design):
- Maximum rainfall rate: 49.3 cm/h(3)
- Maximum snow load: 2.394 kPa

Ambient Design Temperature:
1% Exceedance Values
- Maximum: 37.8°C dry bulb
  25°C wet bulb (coincident)
  26.7°C wet bulb (non-coincident)
- Minimum: –23.3°C–

0% Exceedance Values (Historical Limit)
- Maximum: 46.1°C dry bulb
  26.7°C wet bulb (coincident)
  27.2°C wet bulb (non-coincident)
- Minimum: –40°C

Exclusion Area Boundary (EAB): An area whose boundary has a Chi/Q less than or equal to 1.37×10^{-3} s/m^3.

Extreme Wind: Basic Wind Speed:
177 km/h(1)/197 km/h(2)

Tornado
- Maximum tornado wind speed: 483 km/h
- Maximum pressure drop: 13.827 kPaD
- Missile spectra: Spectrum I(4)

Soil Properties:
- Minimum static bearing capacity: 718.20 kPa
- Minimum shear wave velocity: 305 m/s(6)
- Liquefaction potential: None at plant site resulting from site specific SSE ground motion

Seismology:
- SSE response spectra: See Figures 5.0a and 5.0b(7)

Meteorological Dispersion (Chi/Q):
- Maximum 2-hour 95% EAB 1.37×10^{-3} s/m^3
- Maximum 2-hour 95% LPZ 4.11×10^{-4} s/m^3
- Maximum annual average (8760 hour) LPZ 1.17×10^{-6} s/m^3

(1) 50-year recurrence interval; value to be utilized for design of non-safety-related structures only.

(2) 100-year recurrence interval; value to be utilized for design for safety-related structures only.

(3) Maximum value for 1 hour over 2.6 km^2 probable maximum precipitation (PMP) with ratio of 5 minutes to 1 hour PMP of 0.32. Maximum short-term rate: 15.7cm/5 min.

(4) Spectrum I missiles consist of a massive high kinetic energy missile which deforms on impact, a rigid missile to test penetration resistance, and a small rigid missile of a size sufficient to just pass through any openings in protective barriers. These missiles consists of an 1800 kg automobile, a 125 kg, 20 cm diameter armor piercing artillery shell, and a 2.54 cm diameter solid steel sphere, all impacting at 35% of the maximum horizontal windspeed of the design basis tornado. The first two missiles are assumed to impact at normal incidence, the last to impinge upon barrier openings in the most damaging directions.

(5) At foundation level of the reactor and control buildings.

(6) This is the minimum shear wave velocity at low strains after the soil property uncertainties have been applied.

(7) Free-field, at plant grade elevation.

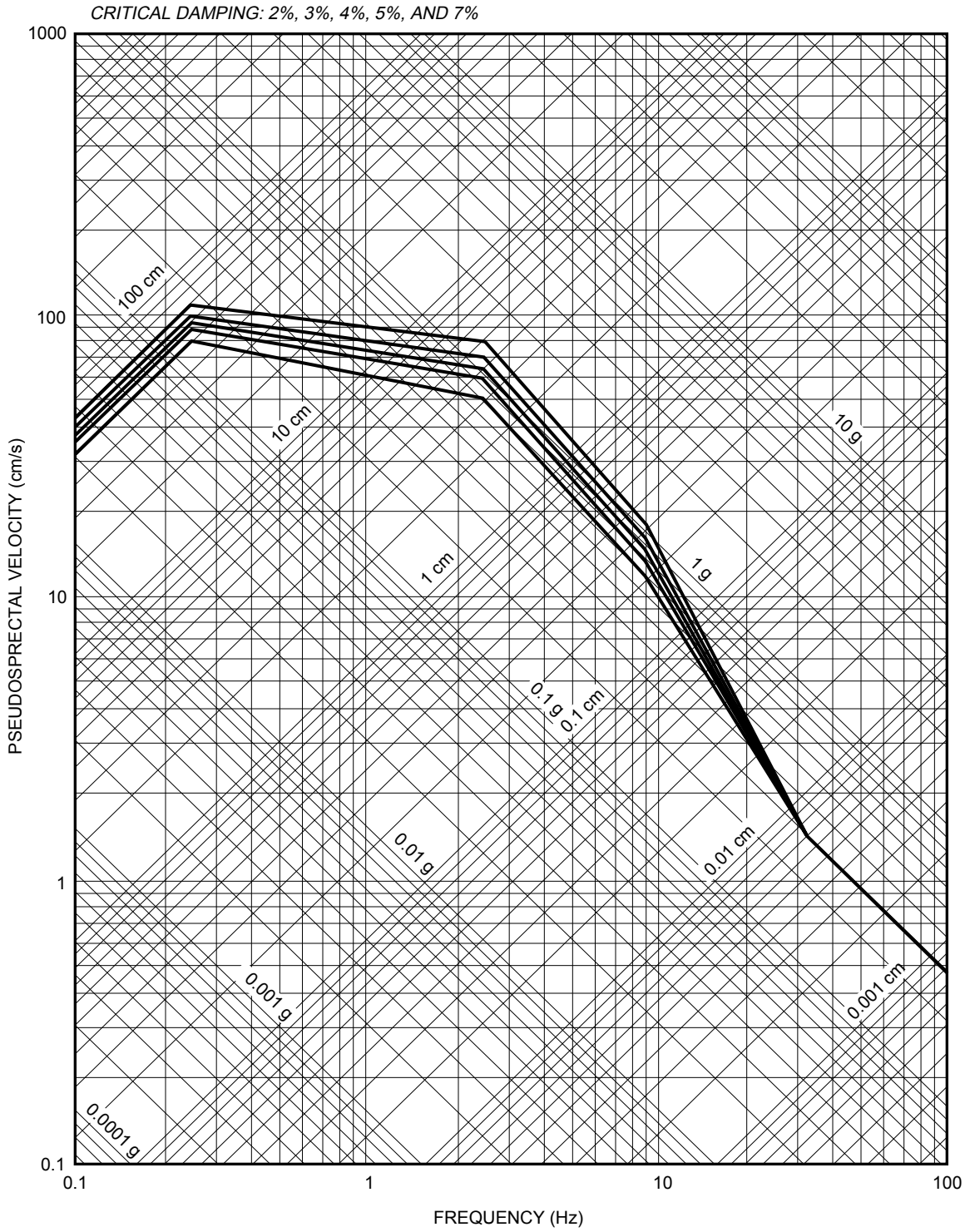

Figure 5.0a Horizontal Safe Shutdown Earthquake Design Spectra

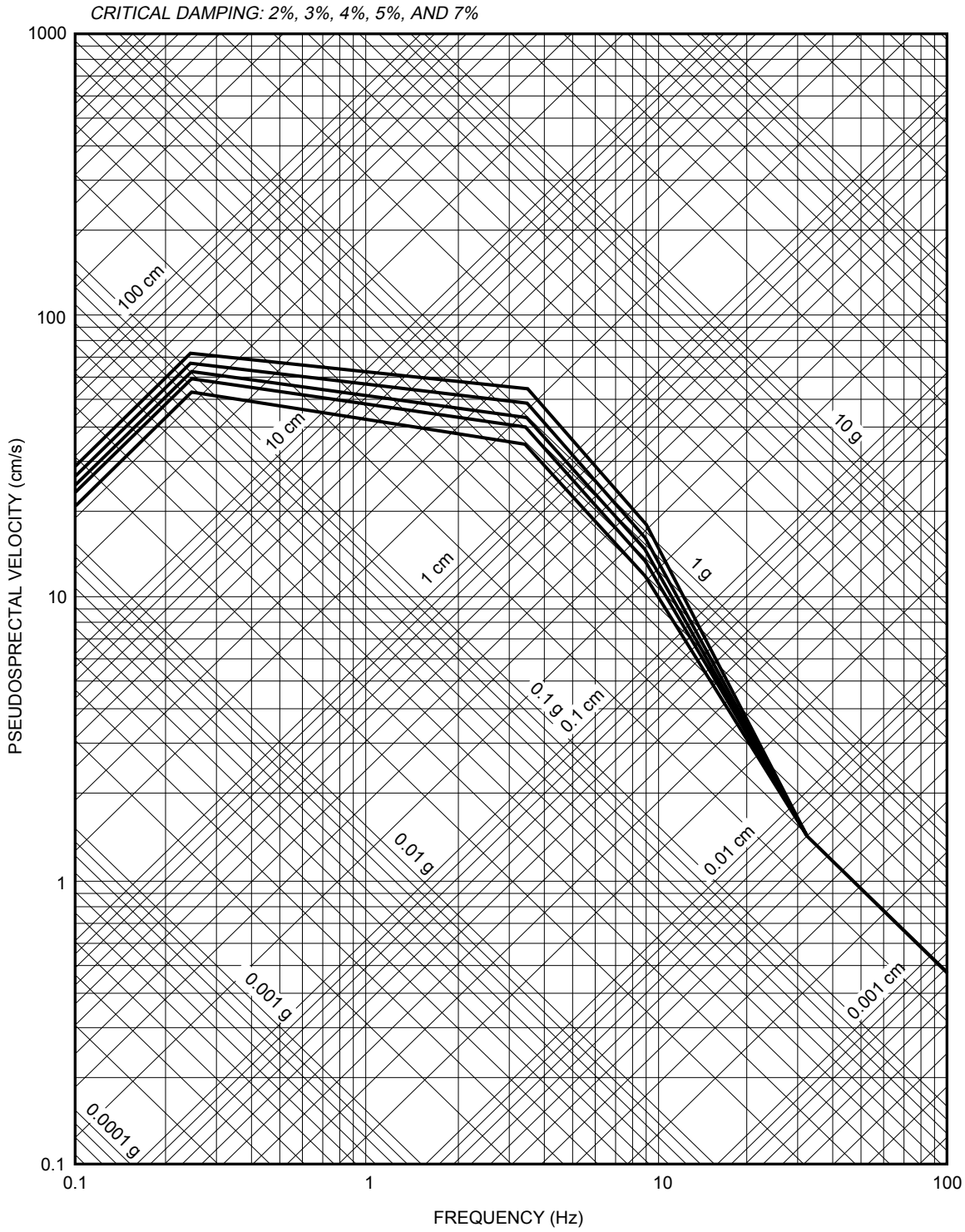

Figure 5.0b Vertical Safe Shutdown Earthquake Design Spectra

Appendix A Legend for Figures

For a number of the systems presented in Section 2, figures depicting the Basic Configuration of the systems have been provided to help facilitate the Design Description. For I&C systems, the figures represent a diagram of significant aspects of the logic of the system. For other systems and buildings, these figures represent a functional diagram, representation, or illustration of design-related information. Unless otherwise specified explicitly, these figures are not necessarily indicative of the scale, location, dimensions, shape, or spatial relationships of as-built structures, systems, and components. In particular, the as-built attributes of structures, systems and components may vary from the attributes depicted on these figures, provided that those safety functions discussed in the Design Description are not adversely affected.

The figures contain information that uses the following conventions:

Mechanical Equipment

Line classification:

		Figure Designation
ASME Code Class 1		1
ASME Code Class 2		2
ASME Code Class 3		3
Non-ASME Code/ Non-Nuclear Safety		NNS
Other Line Type:		This legend can be used for pneumatic lines when needed for clarity. ASME Code class for such lines is defined on the system figure.

Classification/System Boundaries:

The following is a self-explanatory example of how ASME Code class change and system boundary are identified on the figures:

RPV|NBS 1|2

Instrumentation:

Conductivity monitor	CM
Differential pressure indicator	dP
Display and/or control interface with RSS	R
Flow element	FE
Hydrogen analyzer	HE
Level controller	LC
Level detector	L
Moisture element	ME
Pressure element	P
Radiation element	RE
Speed detector	S
Temperature element	T
Vibration detector	V

Note:
Instrumentation should be shown as:(lines connecting the instruments do not indicate ASME Code classes or wire type)

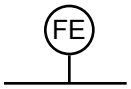

Equipment:

Annunciator (H=high, L=low)	A H L	Relief valve	
Butterfly valve		Plug or Ball valve	
Check valve		Probe	
Damper		Pump	
Fan, Blower		Solenoid	
Filter	F	Strainer	S
Flow restrictor		Three way valve	
Gate valve		Vacuum breaker	VB
Globe valve		Valve type not specified	
Main Turbine Stop Valve		Water trap	TR

Notes: 1. Valves shown do not denote either open or closed position.
2. Valves shown without operators may be local manual valves.
3. Components shown in phantom are not part of the system on the figure it appears.

Valve Operators:

Motor M

Pneumatic P

Electrical Equipment

Cable or conduit

Cable connection

Connection to bus

Circuit Interrupting Device

Transformer

Battery

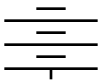

Note 1: Devices shown do not denote either open or closed position.

Note 2: Circuit Interrupting Devices may consist of circuit breakers, fuses or a combination of breakers and fuses.

Building

Divisional Barrier (Note 2)

Door (Note 1 & 3)

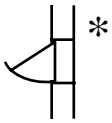

Door (Note 3)

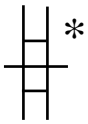

Door (Note 3)

Elevator

Grating Floor

Grid line identifier (for information only)

Grid line intersection (for information only)

Hatch 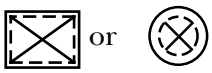

Opening 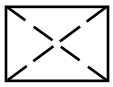

Removable block wall 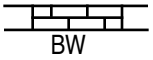

Secondary containment barrier for R/B and MCAE for C/B (Note 2), or radiation zone boundary

Sliding door

Stairway 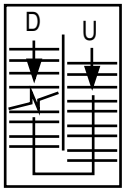

Sump pit

Typical floor designation:
B3F-Basement, 3rd floor

NOTES:

1. Swing of door can be either way.
2. Divisional and secondary containment barriers and MCAE are fire barriers unless specified otherwise.
3. "*" Denotes watertight door.

Control and Instrumentation

Cables: Fiber-optic

Metallic

Fiber-optic or metallic

Cables not connected

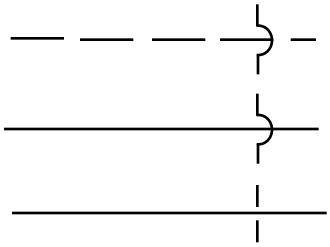

Sensor

Switch

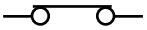

Appendix B Abbreviations and Acronyms Used in the ABWR Certified Design Material

ABS	Absolute
AC	Alternating Current
AC	Atmospheric Control
ADS	Automatic Depressurization System
AFPC	Augmented Fuel Pool Cooling
AMB	Ambient
ATLM	Automated Thermal Limit Monitor
APR	Automatic Power Regulator
APRM	Average Power Range Monitor
ARD	Anti-Rotation Device
ARI	Alternate Rod Insertion
ARM	Area Radiation Monitoring
AS	Turbine Auxiliary Steam System
ASD	Adjustable Speed Drive
ASME Code	American Society of Mechanical Engineers, Boiler and Pressure Vessel Code
ATWS	Anticipated Transient Without Scram
BLDG	Building
C&I	Control and Instrumentation
C/B	Control Building
CBSREA	Control Building Safety-Related Equipment Area
C/C	Cooling Coil
CAMS	Containment Atmospheric Monitoring System
CFCAE	Condensate Feedwater and Condensate Air Extraction
CFS	Condensate and Feedwater System
CID	Control Interface Diagram
CIV	Combined Intermediate Valve
CMP	Configuration Management Plan
CMU	Control Room Multiplexing Unit
COL	Combined Operating License
CPS	Condensate Purification System
CRD	Control Rod Drive
CRDHS	Control Rod Drive Hydraulic System
CRGT	Control Rod Guide Tube
CRHA	Control Room Habitability Area
CS	Containment Spray
CST	Condensate Storage Tank
CTG	Combustion Turbine Generator
CUW	Reactor Water Cleanup
CV	Check Valve
CV	Control Valve
CVCF	Constant Voltage Constant Frequency
CW	Circulating Water
DC	Direct Current
DEPSS	Drywell Equipment and Piping Support Structure
DG	Diesel Generator, Emergency
DIV	Division
D/S	Dryer and Separator
DTM	Digital Trip Modules
DWC	Drywell Cooling
E/B	Electrical Building
EAB	Exclusion Area Boundary
EAROM	Electrically-Alterable Read-Only Memory
ECCS	Emergency Core Cooling System
EDG	Emergency Diesel Generator
EMC	Electromagnetic Compatibility
EMI	Electromagnetic Interference
EMS	Essential Multiplexing System
EPD	Electrical Power Distribution
ESD	Electrostatic Discharge
ESF	Engineered Safety Feature
FCS	Flammability Control System
FCU	Fan Coil Unit
FDWC	Feedwater Control
FIV	Flow-Induced Vibration
FMCRD	Fine Motion Control Rod Drive
FP	Fire Protection

FPC	Fuel Pool Cooling and Cleanup
FPS	Fire Protection System
FW	Feedwater
GL	Grade Level
GSC	Gland Seal Condenser
HAZ	Heat-Affected Zone
HCU	Hydraulic Control Unit
HCW	High Conductivity Waste
HECW	HVAC Emergency Cooling Water
HEPA	High Efficiency Particulate Air
HFE	Human Factors Engineering
HNCW	HVAC Normal Cooling Water
HPCF	High Pressure Core Flooder
HPIN	High Pressure Nitrogen Gas Supply
HSI	Human-System Interfaces
HVAC	Heating, Ventilating, and Air Conditioning
HWH	Hot Water Heating
HX	Heat Exchanger
IA	Instrument Air
ICGT	In-Core Guide Tube
I&C	Instrumentation and Control
INST	Instrumentation
ISLOCA	Intersystem Loss-of-Coolant Accident
ISI	In-Service Inspection
ITAAC	Inspection, Tests, Analyses, and Acceptance Criteria
ITP	Initial Test Program
IV	Intercept Valve
ISV	Intercept Stop Valve
LCP	Local Control Panels
LCW	Low Conductivity Waste
LD	Load Driver
LDS	Leak Detection and Isolation System
LOCA	Loss-of-Coolant Accident
LOPP	Loss of Preferred Power
LPFL	Low Pressure Core Flooder
LPMS	Loose Parts Monitoring System
LPRM	Local Power Range Monitor
LPZ	Low Population Zone
LSPS	Lighting and Servicing Power Supply
MC	Main Condenser
M/C	Metal-Clad
MCAE	Main Control Area Envelope
MCC	Motor Control Center
MCES	Main Condenser Evacuation System
MCR	Main Control Room
MCRP	Main Control Room Panels
MG	Motor Generator
MOV	Motor-Operated Valve
MPT	Main Power Transformer
MRBM	Multi-Channel Rod Block Monitor
MS	Main Steam
MSIV	Main Steam Isolation Valve
MSL	Main Steamline
MTSV	Main Turbine Stop Valve
MT	Main Turbine
MUWC	Make Up Water (Condensate)
MUWP	Make Up Water (Purified)
MWP	Makeup Water Preparation
NBS	Nuclear Boiler System
NEMS	Non-Essential Multiplexing System
NMS	Neutron Monitoring System
NPSH	Net Positive Suction Head
NRHX	Non-Regenerative HX
NSD	Non-Radioactive Storm Drain
OGS	Off-Gas System
OLU	Output Logic Unit
OPRM	Oscillating Power Range Monitor
OSC	Operational Support Center
OST	Oil Storage and Transfer
P/C	Power Center
PASS	Post-Accident Sampling System
PCHS	Power Cycle Heat Sink
PCS	Primary Containment System
PIP	Plant Investment Protection
PMG	Plant Main Generator
PRM	Process Radiation Monitoring
PROM	Programmable Read-Only Memory

PS	Pipe Space
PSW	Potable and Sanitary Water
R/B	Reactor Building
RAT	Reserve Auxiliary Transformer
RCCV	Reinforced Concrete Containment Vessel
RCIC	Reactor Core Isolation Cooling
RCIS	Rod Control and Information System
RCPB	Reactor Coolant Pressure Boundary
RCW	Reactor Building Cooling Water
RFC	Recirculation Flow Control
RFI	Radio Frequency Interference
RHR	Residual Heat Removal
RHX	Regenerative HX
RIP	Reactor Internal Pump
RMU	Remote Multiplexing Unit
RPS	Reactor Protection System
RPV	Reactor Pressure Vessel
RRS	Reactor Recirculation System
RSS	Remote Shutdown System
RSW	Reactor Service Water
RW/B	Radwaste Building
RX	Reactor
S/B	Service Building
S/P	Suppression Pool
SA	Service Air
SAM	Sampling System
SB&PC	Steam Bypass and Pressure Control
SC	Shutdown Cooling
SCRRI	Selected Control Rod Run-In
SD	Storm Drain
SD	Smoke Detector
SDC	Shutdown Cooling
SGTS	Standby Gas Treatment System
SJAE	Steam Jet Air Ejectors
SIT	Structural Integrity Test
SLC	Standby Liquid Control
SLU	Safety System Logic Unit
SMP	Software Management Plan
S/P	Suppression Pool
SPC	Suppression Pool Cooling
SPCU	Suppression Pool Cleanup
SPTM	Suppression Pool Temperature Monitoring
SRNM	Startup Range Neutron Monitor
SRV	Safety/Relief Valve
SSE	Safe Shutdown Earthquake
SSLC	Safety System Logic and Control
SSPV	Scram Solenoid Pilot Valve
STP	Simulated Thermal Power
SWC	Surge Withstand Capability
T/B	Turbine Building
TB	Turbine Bypass
TBS	Turbine Bypass System
TCW	Turbine Building Cooling Water
TD	Tornado Damper
TDH	Total Developed Head
TGS	Turbine Gland Seal
TLU	Trip Logic Unit
TMSL	Typical Mean Sea Level Elevation
TN	Transmission Network
TSC	Technical Support Center
TSW	Turbine Service Water
UAT	Unit Auxiliary Transformers
UHS	Ultimate Heat Sink
USE	Upper-Shelf Energy
V&V	Verification and Validation

Note: These abbreviations and acronyms apply to the ABWR Certified Design Material. Other documents may use different abbreviations or acronyms.

Appendix C Conversion to ASME Standard Units

	From	To convert to	Divide by
(1)	**Pressure/Stress**		
	kilopascal	1 Pound/Square Inch	6.894757
	kilopascal	1 Atmosphere (STD)	101.325
	kilopascal	1 Foot of Water (39.2°F)	2.98898
	kilopascal	1 Inch of Water (60°F)	0.24884
	kilopascal	1 Inch of HG (32°F)	3.38638
(2)	**Force/Weight**		
	newton	1 Pound - force	4.448222
	kilogram	1 Ton (Short)	907.1847
	kilogram	1 Tons (Long)	1016.047
(3)	**Heat/Energy/Power**		
	joule	1 Btu	1055.056
	joule	1 Calorie	4.1868
	kilowatt-hour	1 Btu	0.0002930711
	kilowatt	1 Horsepower(U.K.)	0.7456999
	kilowatt-hour	1 Horsepower-Hour	0.7456999
	kilowatt	1 Btu/Min	0.0175725
	joule/gram	1 Btu/Pound	2.326
(4)	**Length**		
	millimeter	1 Inch	25.4
	centimeter	1 Inch	2.54
	meter	1 Inch	0.0254
	meter	1 Foot	0.3048
	centimeter	1 Foot	30.48
	meter	1 Mile	1609.344
	kilometer	1 Mile	1.609344
(5)	**Volume**		
	liter	1 Cubic Inch	0.01638706
	cubic centimeter	1 Cubic Inch	16.38706

	From	To convert to	Divide by
	cubic meter	1 Cubic Foot	0.02831685
	cubic centimeter	1 Cubic Foot	28316.85
	liter	1 Cubic Foot	28.31685
	cubic meter	1 Cubic Yard	0.7645549
	liter	1 Gallon (US)	3.785412
	cubic centimeter	1 Gallon (US)	3785.412
	E-03 cubic centimeter	1 Gallon (US)	3.785412
(6)	**Volume Per Unit Time**		
	cubic centimeter/s	1 Cubic Foot/Min	471.9474
	cubic meter/h	1 Cubic Foot/Min	1.69901
	liter/s	1 Cubic Foot/Min	0.4719474
	cubic meter/s	1 Cubic Foot/Sec	0.02831685
	E-05 cubic meter/s	1 Gallon/Min (US)	6.30902
	cubic meter/h	1 Gallon/Min (US)	0.22712
	liter/s (101.325 kPaA,15.56°C)	1 STD CFM (14.696 psia, 60°F)	0.4474
	cubic meter/h (101.325 kPaA,15.56°C)	1 STD CFM (14.696 psia, 60°F)	1.608
(7)	**Velocity**		
	centimeter/s	1 Foot/Sec	30.48
	centimeter/s	1 Foot/Min	0.508
	meter/s	1 Foot/Min	0.00508
	meter/min	1 Foot/Min	0.3048
	centimeter/s	1 Inches/Sec	2.54
(8)	**Area**		
	square centimeter	1 Square Inch	6.4516
	E-04 square meter	1 Square Inch	6.4516
	square centimeter	1 Square Foot	929.0304
	E-02 square meter	1 Square Foot	9.290304
(9)	**Torque**		
	newton-meter	1 Foot Pound	1.355818
(10)	**Mass Per Unit Time**		
	kilogram/s	1 Pound/Sec	0.4535924

	From	To Convert to	Divide by
	kilogram/min	1 Pound/Min	0.4535924
	kilogram/h	1 Pound/Min	27.215544
(11)	**Mass Per Unit Volume**		
	kilogram/cubic meter	1 Pound/Cubic Inch	27679.90
	kilogram/cubic meter	1 Pound/Cubic Foot	16.01846
	kilogram/cubic centimeter	1 Pound/Cubic Inch	0.0276799
	liter/s	1 Gallon/Min	0.0630902
(12)	**Dynamic Viscosity**		
	Pa•s	1 Pound-Sec/Sq Ft	47.88026
(13)	**Specific Heat/Heat Transfer**		
	joule/kilogram kelvin	1 Btu/Pound-Deg F	4186.8
	watt/square meter kelvin	1 Btu/Hr-Sq Ft-Deg F	5.678263
	watt/square meter kelvin	1 Btu/Sec-Sq Ft-Deg F	2.044175E+4
	watt/square meter	1 Btu/Hr-Sq Ft	3.154591
(14)	**Temperature**		
	degree celsius	Degrees Fahrenheit	$T_{\circ F} = T_{\circ C} x 1.8+32$
	degree C increment	1 Degree F Increment	0.555556
(15)	**Electricity**		
	coulomb	1 ampere hour	3600
	siemens/meter	1 mho/centimeter	100
(16)	**Light**		
	candels/square meter	1 candela/square inch	1550.003
	lux	1 footcandle	10.76391
(17)	**Radiation**		
	megabequerel	1 curie	37,000
	gray	1 rad	0.01
	sievert	1 rem	0.01

Note:

Rounding of Caculated values per Appendix C of ANSI/IEEE Std. 268.