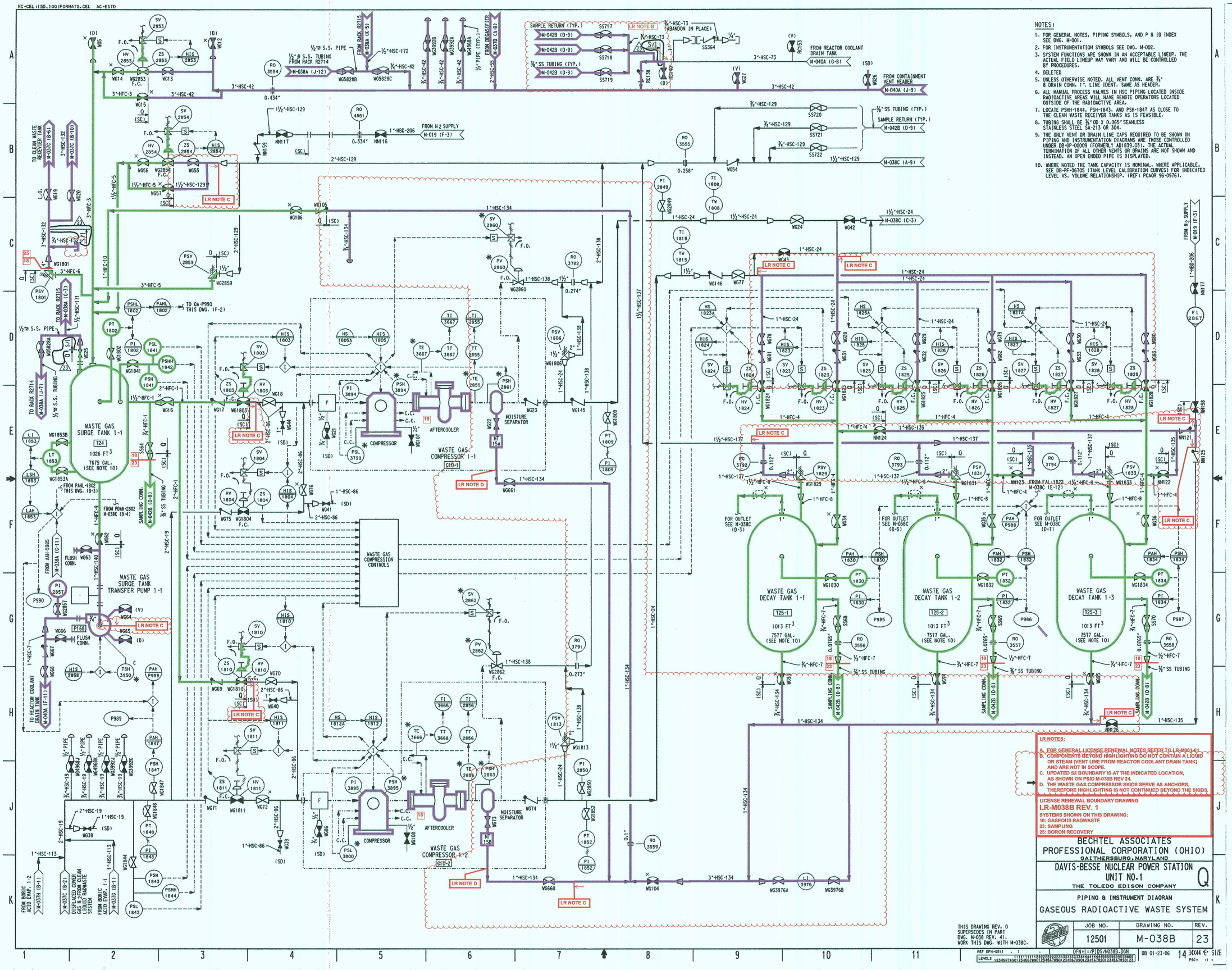

NOTES:

1. FOR GENERAL NOTES, PIPING SYMBOLS, AND P & ID INDEX SEE DWG. M-001.
2. FOR INSTRUMENTATION SYMBOLS SEE DWG. M-002.
3. SYSTEM FUNCTIONS ARE SHOWN IN AN ACCEPTABLE LINEUP. THE ACTUAL FIELD LINEUP MAY VARY AND WILL BE CONTROLLED BY PROCEDURES.
4. DELETED
5. UNLESS OTHERWISE NOTED, ALL VENT CONN. ARE ¾" & DRAIN CONN. 1". LINE IDENT. SAME AS HEADER.
6. ALL MANUAL PROCESS VALVES IN HSC PIPING LOCATED INSIDE RADIOACTIVE AREAS WILL HAVE REMOTE OPERATORS LOCATED OUTSIDE OF THE RADIOACTIVE AREA.
7. LOCATE PSHH-1844, PSH-1843, AND PSH-1847 AS CLOSE TO THE CLEAN WASTE RECEIVER TANKS AS IS FEASIBLE.
8. TUBING SHALL BE ⅜" OD X 0.065" SEAMLESS STAINLESS STEEL SA-213 GR 304.
9. THE ONLY VENT OR DRAIN LINE CAPS REQUIRED TO BE SHOWN ON PIPING AND INSTRUMENTATION DIAGRAMS ARE THOSE CONTROLLED UNDER DB-OP-00009 (FORMERLY AD1839.03). THE ACTUAL TERMINATION OF ALL OTHER VENTS OR DRAINS ARE NOT SHOWN AND INSTEAD, AN OPEN ENDED PIPE IS DISPLAYED.
10. WHERE NOTED THE TANK CAPACITY IS NOMINAL. WHERE APPLICABLE, SEE DB-PF-06705 (TANK LEVEL CALIBRATION CURVES) FOR INDICATED LEVEL VS. VOLUME RELATIONSHIP. (REF: PCAQR 96-0976).

LR NOTES:

A. FOR GENERAL LICENSE RENEWAL NOTES REFER TO LR-M001-01.
B. COMPONENTS BEYOND HIGHLIGHTING DO NOT CONTAIN A LIQUID OR STEAM (VENT LINE FROM REACTOR COOLANT DRAIN TANK) AND ARE NOT IN SCOPE.
C. UPDATED 3A BOUNDARY IS AT THE INDICATED LOCATION, AS SHOWN ON PAID M-038B REV 24.
D. THE WASTE GAS COMPRESSOR SKIDS SERVE AS ANCHORS, THEREFORE HIGHLIGHTING IS NOT CONTINUED BEYOND THE SKIDS.

LICENSE RENEWAL BOUNDARY DRAWING
LR-M038B REV. 1
SYSTEMS SHOWN ON THIS DRAWING:
18: GASEOUS RADWASTE
23: SAMPLING
25: BORON RECOVERY

BECHTEL ASSOCIATES PROFESSIONAL CORPORATION (OHIO)
GAITHERSBURG, MARYLAND

DAVIS-BESSE NUCLEAR POWER STATION
UNIT NO.1
THE TOLEDO EDISON COMPANY

Q

PIPING & INSTRUMENT DIAGRAM
GASEOUS RADIOACTIVE WASTE SYSTEM

JOB NO.	DRAWING NO.	REV.
12501	M-038B	23

THIS DRAWING REV. 0 SUPERSEDES IN PART DWG. M-038 REV. 41. WORK THIS DWG. WITH M-038C.

DFN=I:/PIDS/M038B.DGN DB 01-23-06 14 34X44 "E" SIZE

01253