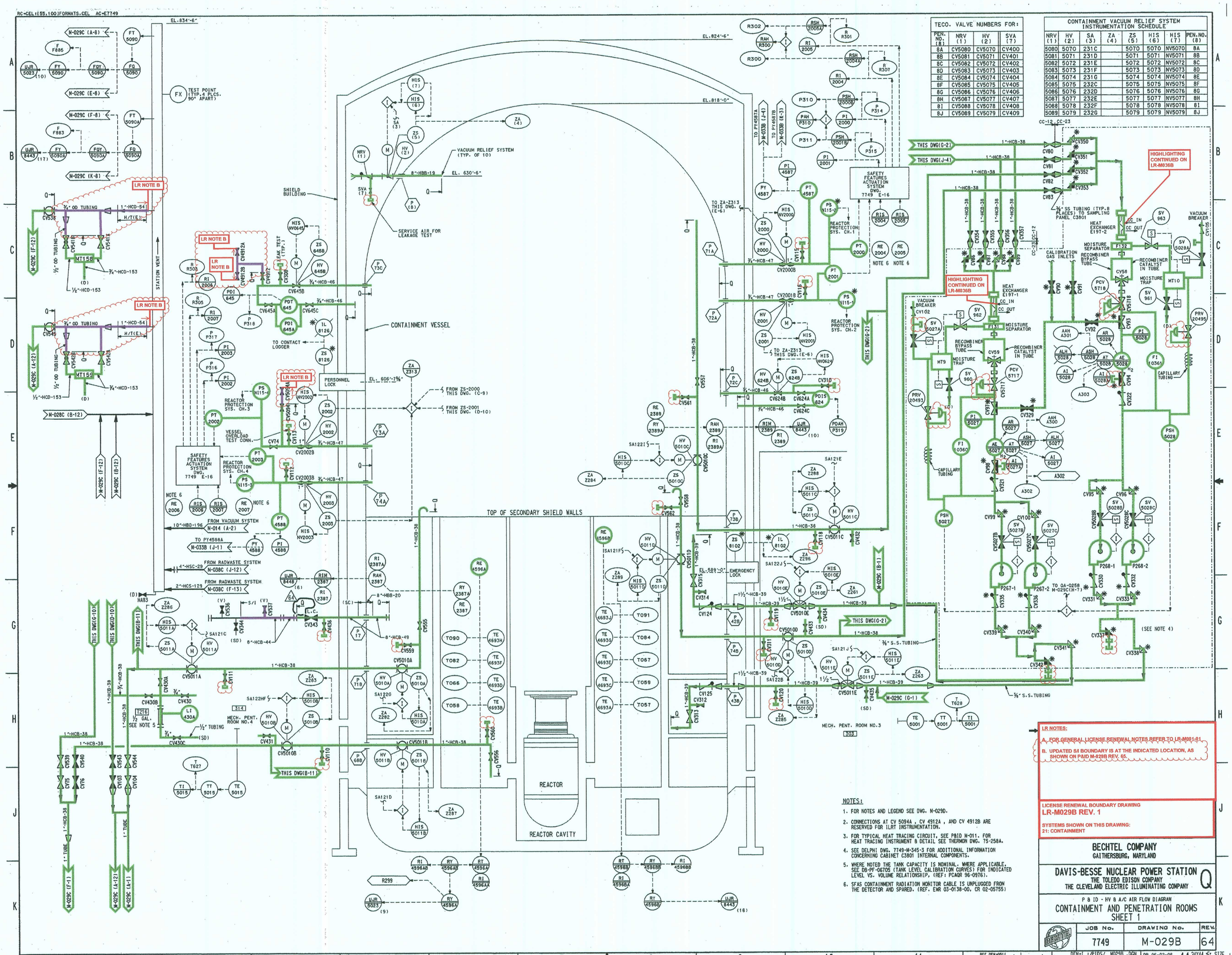

TECO. VALVE NUMBERS FOR:			
PEN. NO. (8)	NRV (1)	HV (2)	SVA (7)
8A	CV5080	CV5070	CV400
8B	CV5081	CV5071	CV401
8C	CV5082	CV5072	CV402
8D	CV5083	CV5073	CV403
8E	CV5084	CV5074	CV404
8F	CV5085	CV5075	CV405
8G	CV5086	CV5076	CV406
8H	CV5087	CV5077	CV407
8I	CV5088	CV5078	CV408
8J	CV5089	CV5079	CV409

CONTAINMENT VACUUM RELIEF SYSTEM INSTRUMENTATION SCHEDULE							
NRV (1)	HV (2)	SA (3)	ZA (4)	ZS (5)	HIS (6)	HIS (7)	PEN.NO. (8)
5080	5070	231C		5070	5070	NV5070	8A
5081	5071	231D		5071	5071	NV5071	8B
5082	5072	231E		5072	5072	NV5072	8C
5083	5073	231F		5073	5073	NV5073	8D
5084	5074	231G		5074	5074	NV5074	8E
5085	5075	232C		5075	5075	NV5075	8F
5086	5076	232D		5076	5076	NV5076	8G
5087	5077	232E		5077	5077	NV5077	8H
5088	5078	232F		5078	5078	NV5078	8I
5089	5079	232G		5079	5079	NV5079	8J

NOTES:

1. FOR NOTES AND LEGEND SEE DWG. M-029D.
2. CONNECTIONS AT CV 5094A , CV 4912A , AND CV 4912B ARE RESERVED FOR ILRT INSTRUMENTATION.
3. FOR TYPICAL HEAT TRACING CIRCUIT, SEE P&ID M-011. FOR HEAT TRACING INSTRUMENT & DETAIL SEE THERMON DWG. 75-258A.
4. SEE DELPHI DWG. 7749-M-345-3 FOR ADDITIONAL INFORMATION CONCERNING CABINET C3801 INTERNAL COMPONENTS.
5. WHERE NOTED THE TANK CAPACITY IS NOMINAL. WHERE APPLICABLE, SEE DB-PF-06705 (TANK LEVEL CALIBRATION CURVES) FOR INDICATED LEVEL VS. VOLUME RELATIONSHIP. (REF: PCAQR 96-0976).
6. SFAS CONTAINMENT RADIATION MONITOR CABLE IS UNPLUGGED FROM THE DETECTOR AND SPARED. (REF. EWR 03-0138-00, CR 02-05755)

LR NOTES:

A. FOR GENERAL LICENSE RENEWAL NOTES REFER TO LR-M001-01.

B. UPDATED S/I BOUNDARY IS AT THE INDICATED LOCATION, AS SHOWN ON P&ID M-029B REV. 68.

LICENSE RENEWAL BOUNDARY DRAWING
LR-M029B REV. 1

SYSTEMS SHOWN ON THIS DRAWING:
21: CONTAINMENT

BECHTEL COMPANY
GAITHERSBURG, MARYLAND

DAVIS-BESSE NUCLEAR POWER STATION
THE TOLEDO EDISON COMPANY
THE CLEVELAND ELECTRIC ILLUMINATING COMPANY

P & ID - HV & A/C AIR FLOW DIAGRAM
CONTAINMENT AND PENETRATION ROOMS
SHEET 1

JOB No.	DRAWING No.	REV.
7749	M-029B	64

01031