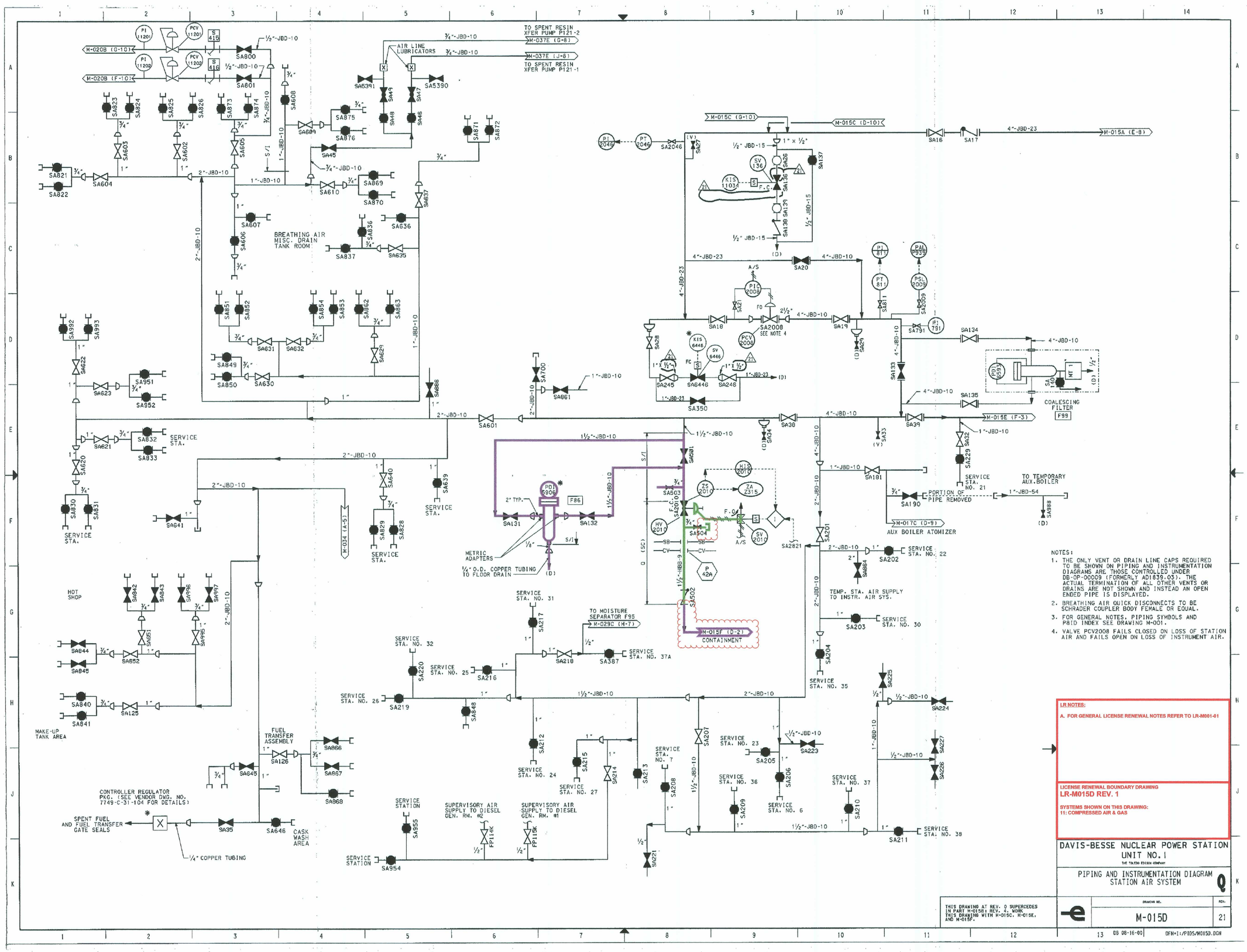

NOTES:

1. THE ONLY VENT OR DRAIN LINE CAPS REQUIRED TO BE SHOWN ON PIPING AND INSTRUMENTATION DIAGRAMS ARE THOSE CONTROLLED UNDER DB-OP-00009 (FORMERLY AD1839.03). THE ACTUAL TERMINATION OF ALL OTHER VENTS OR DRAINS ARE NOT SHOWN AND INSTEAD AN OPEN ENDED PIPE IS DISPLAYED.
2. BREATHING AIR QUICK DISCONNECTS TO BE SCHRADER COUPLER BODY FEMALE OR EQUAL.
3. FOR GENERAL NOTES, PIPING SYMBOLS AND P&ID INDEX SEE DRAWING M-001.
4. VALVE PCV2008 FAILS CLOSED ON LOSS OF STATION AIR AND FAILS OPEN ON LOSS OF INSTRUMENT AIR.

LR NOTES:

A. FOR GENERAL LICENSE RENEWAL NOTES REFER TO LR-M001-01

LICENSE RENEWAL BOUNDARY DRAWING
LR-M015D REV. 1

SYSTEMS SHOWN ON THIS DRAWING:
11: COMPRESSED AIR & GAS

DAVIS-BESSE NUCLEAR POWER STATION
UNIT NO. 1
THE TOLEDO EDISON COMPANY

PIPING AND INSTRUMENTATION DIAGRAM
STATION AIR SYSTEM

Q

THIS DRAWING AT REV. 0 SUPERCEDES IN PART M-015B; REV. 4. WORK THIS DRAWING WITH M-015C, M-015E, AND M-015F.

DRAWING NO. M-015D REV. 21

DB 08-16-00 DFN=I:/PIDS/M015D.DGN

01819