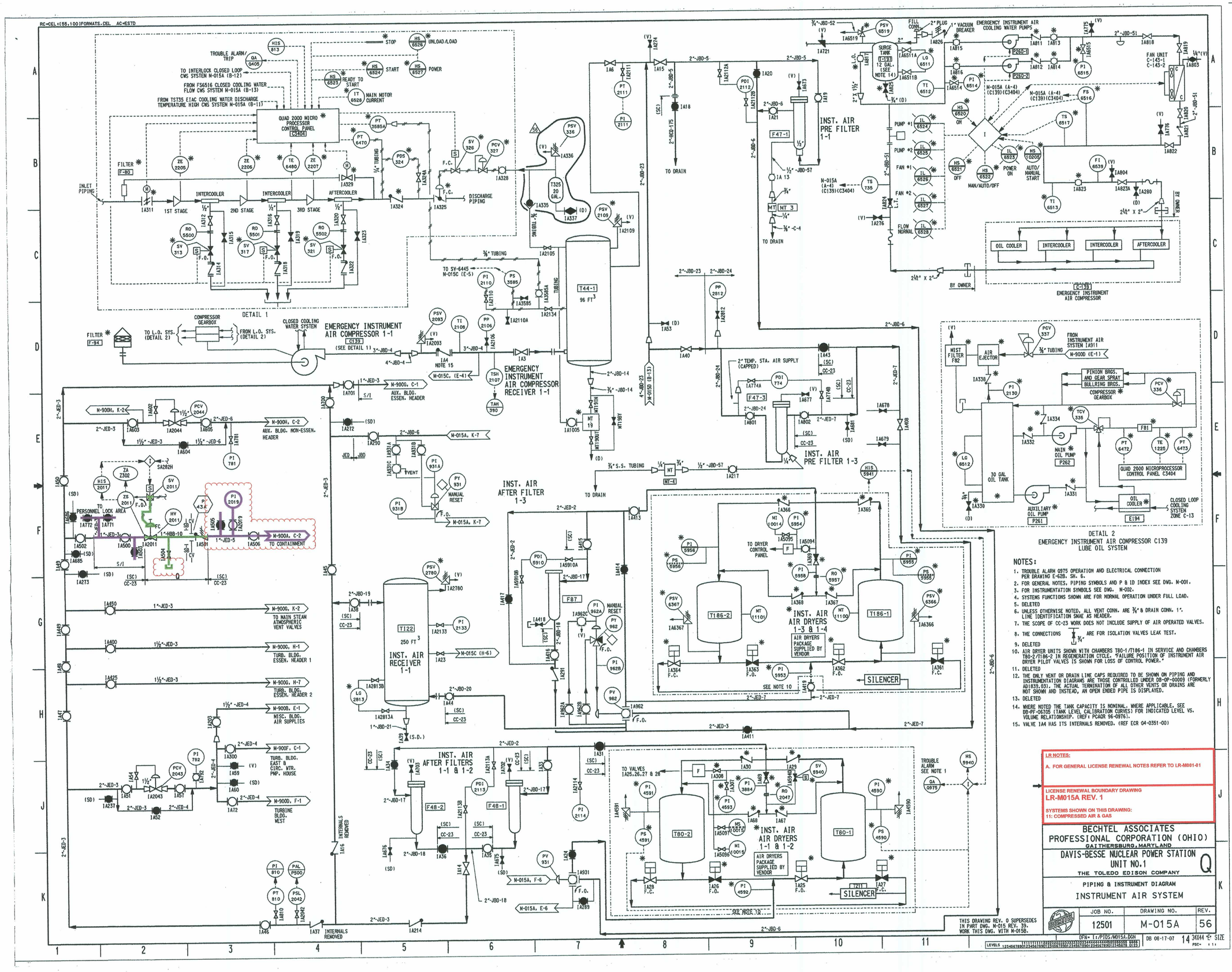

DETAIL 2
EMERGENCY INSTRUMENT AIR COMPRESSOR C139
LUBE OIL SYSTEM

NOTES:

1. TROUBLE ALARM Q975 OPERATION AND ELECTRICAL CONNECTION PER DRAWING E-62B, SH. 6.
2. FOR GENERAL NOTES, PIPING SYMBOLS AND P & ID INDEX SEE DWG. M-001.
3. FOR INSTRUMENTATION SYMBOLS SEE DWG. M-002.
4. SYSTEMS FUNCTIONS SHOWN ARE FOR NORMAL OPERATION UNDER FULL LOAD.
5. DELETED
6. UNLESS OTHERWISE NOTED, ALL VENT CONN. ARE ¾" & DRAIN CONN. 1". LINE IDENTIFICATION SHAE AS HEADER.
7. THE SCOPE OF CC-23 WORK DOES NOT INCLUDE SUPPLY OF AIR OPERATED VALVES.
8. THE CONNECTIONS ¾" ARE FOR ISOLATION VALVES LEAK TEST.
9. DELETED
10. AIR DRYER UNITS SHOWN WITH CHAMBERS T80-1/T186-1 IN SERVICE AND CHAMBERS T80-2/T186-2 IN REGENERATION CYCLE. "FAILURE POSITION OF INSTRUMENT AIR DRYER PILOT VALVES IS SHOWN FOR LOSS OF CONTROL POWER."
11. DELETED
12. THE ONLY VENT OR DRAIN LINE CAPS REQUIRED TO BE SHOWN ON PIPING AND INSTRUMENTATION DIAGRAMS ARE THOSE CONTROLLED UNDER DB-OP-00009 (FORMERLY AD1839.03). THE ACTUAL TERMINATION OF ALL OTHER VENTS OR DRAINS ARE NOT SHOWN AND INSTEAD, AN OPEN ENDED PIPE IS DISPLAYED.
13. DELETED
14. WHERE NOTED THE TANK CAPACITY IS NOMINAL. WHERE APPLICABLE, SEE DB-PF-06705 (TANK LEVEL CALIBRATION CURVES) FOR INDICATED LEVEL VS. VOLUME RELATIONSHIP. (REF: PCAQR 96-0976).
15. VALVE IA4 HAS ITS INTERNALS REMOVED. (REF ECR 04-0351-00)

LR NOTES:

A. FOR GENERAL LICENSE RENEWAL NOTES REFER TO LR-M001-01

LICENSE RENEWAL BOUNDARY DRAWING
LR-M015A REV. 1

SYSTEMS SHOWN ON THIS DRAWING:
11: COMPRESSED AIR & GAS

BECHTEL ASSOCIATES
PROFESSIONAL CORPORATION (OHIO)
GAITHERSBURG, MARYLAND

DAVIS-BESSE NUCLEAR POWER STATION
UNIT NO.1
THE TOLEDO EDISON COMPANY

PIPING & INSTRUMENT DIAGRAM
INSTRUMENT AIR SYSTEM

JOB NO.	DRAWING NO.	REV.
12501	M-015A	56

THIS DRAWING REV. 0 SUPERSEDES IN PART DWG. M-015 REV. 39. WORK THIS DWG. WITH M-015B.

DFN= I:/PIDS/M015A.DGN DB 08-17-07 14 34X44 SIZE

01D13