ORIGINAL DRAWING MADE ON DU PONT POLYESTER FILM

➡ ANALYZE FOR SAFETY, ECOLOGY, AND MINIMUM ESSENTIAL DESIGN ⬅

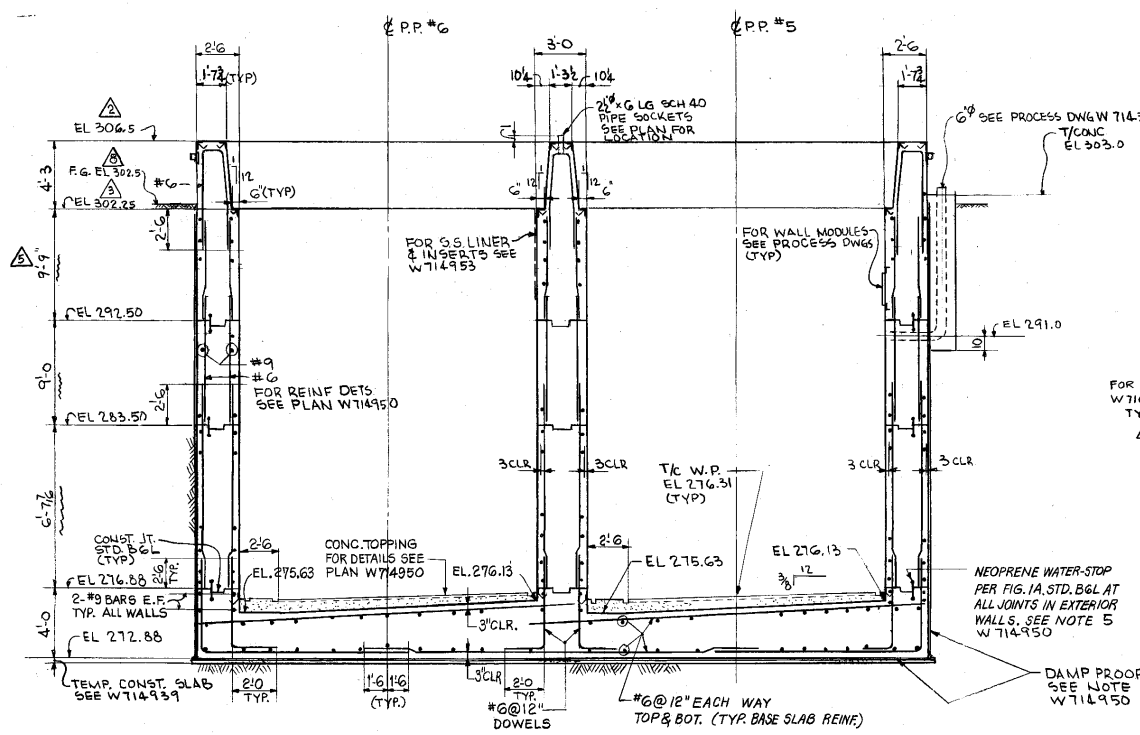

SECTION B-B (W714950)

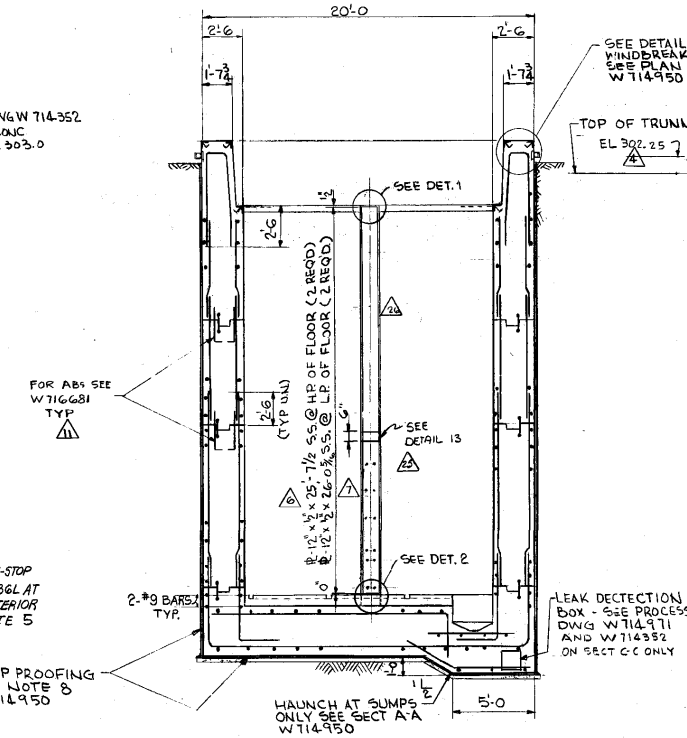

SECTION C-C (W714950)

SECTION F-F (W714950)

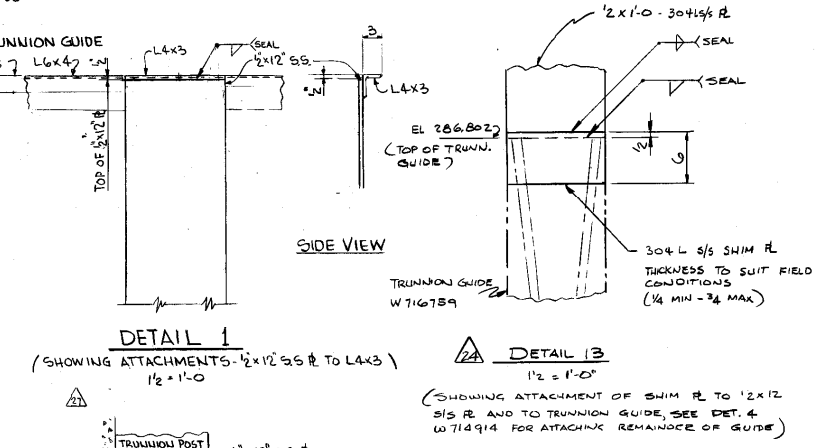

DETAIL 1 (SHOWING ATTACHMENTS - 1/2"x12" S.S. PL TO L4x3) 1 1/2" = 1'-0

DETAIL 13 1"/2 = 1'-0"

(SHOWING ATTACHMENT OF SHIM PL TO 12"x12" S/S PL AND TO TRUNNION GUIDE, SEE DET. 4 W714914 FOR ATTACHING REMAINDER OF GUIDE)

DETAIL 2 (SHOWING ATTACHMENT 1/2"x12" PL TO LINER PL ON BOTT. OF PIT) 1" = 1'-0

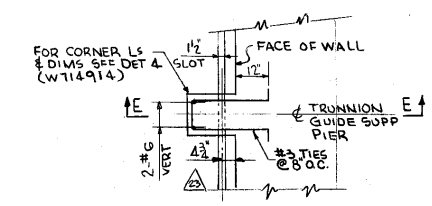

DETAIL 3 (W714950) (TYPICAL 4 PLACES) N.T.S.

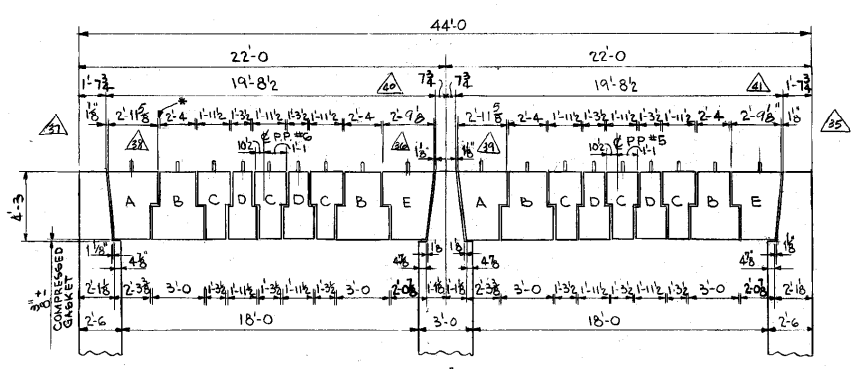

SECTION D-D (W714950)

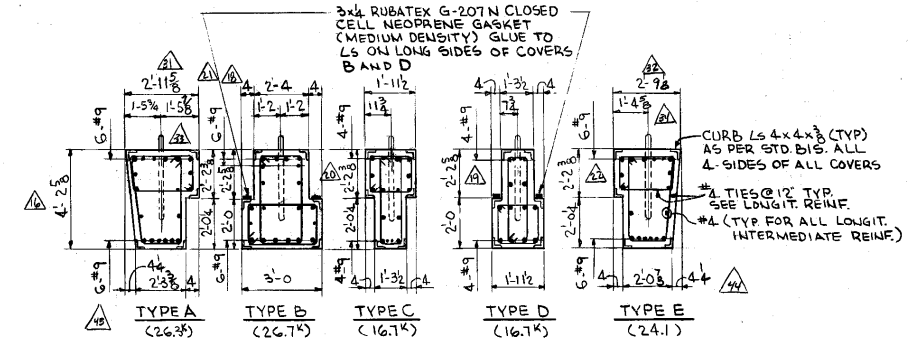

PUMP PIT COVER REINF DETAILS

TRANSVERSE SECTIONS

(FOR PORT LOCATIONS SEE PLAN) 3/8" = 1'-0

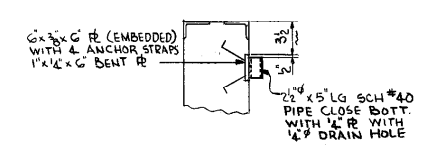

DETAIL 4 (WINDBREAKER SUPPORT) 3/4" = 1'-0

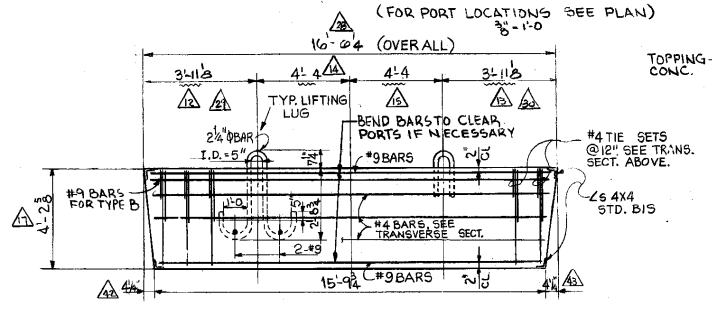

TYP. LONGITUDINAL SECTION

PIT COVER DETAILS

3/8" = 1'-0

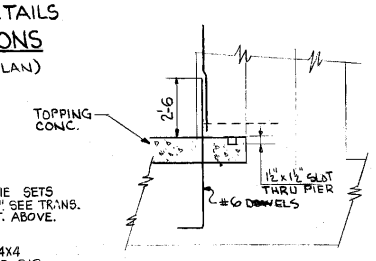

SECTION E-E N.T.S.

1 FOR GENERAL NOTES SEE DWG W714950

2 MAXIMUM COVER WEIGHT = 26,700#
MAX. CAPACITY OF MC 504W CRANE WITH OUTRIGGERS AND WITH 30' BOOM = 27600# AT RADIUS = 17'-6 3/8" (BACK OF CRANE FLUSH WITH OUTSIDE FACE OF PIT WALL)
MAX. ALLOWED WEIGHT OF LIFTING YOKE AND OTHER LOAD HANDLING DEVICES MUST NOT EXCEED 900# TOTAL.
THE 27600# CAPACITY OF MC 504W CRANE ALSO REQUIRES THAT TURNTABLE BE IN FRONT POSITION (ON 2 POSITION MOUNTING PL) RATHER THAN REAR POSITION FOR SHOVEL OPERATION

3. COVER WEIGHT WITHSTANDS 1.5PSI UPLIFT

4. PIPE TO BE ASTM A 134 GALVANIZED

5. MISC STEEL & EMBEDDED ANGLES TO BE A-36 GALVANIZED.

THIS DOCUMENT CONTAINS INFORMATION RELATING TO ACTIVITIES OF THE U.S. DEPARTMENT OF ENERGY. NOT TO BE REPRODUCED OR RELEASED WITHOUT PRIOR APPROVAL.

M/F	BLDG.	PROJ.	DA	TYPE		LAST
	241 H	951965	Y 820 S 821	4.3	W 714951	46 REV.

ENGINEERING DOC. CONTROL - SRS DD115399

SAVANNAH RIVER PLANT
BLDG. 241-H
REPLACE WASTE HEADERS
PUMP PIT 5&6 SECTS. & DETS. SHEET-2
CONCRETE

RMD REVIEWED AT REV. 46 DATE NOVEMBER 8, 1989

PROJ	NO.	REVISION	RVSD	CHKD	APPD	DATE
951965	46	WAS W714850	RWK 1-14-81	VM 1-15-81	VM	1-22-81
951965	10-21 22	2'-2 3/8" WAS 1'-11 3/8"	RWK 8-14-80	VM 9-2-80		
951965	23	DIM. WAS TO EDGE OF SLOT				
951965	24,25	ADDED DETAIL 13				
951965	26	DELETED BOLTS				
951965	27	DELETED SHIM NOTE				
	28-30	16'-6 1/4 WAS 16'-5 3/4", 3'-11 3/8" WAS 3'-10 3/8"				
	31-32	2'-11 3/8" WAS 2'-11 3/8", 2'-9 3/8" WAS 2'-8 3/8"				
	33-34	1'-5 7/8" WAS 1'-5 3/8", 1'-4 5/8" WAS 1'-4 1/8"				
	38-39	1'-8 WAS 1'-8 1/8", 2'-11 3/8" WAS 2'-11 3/8"				
951965	40-45	2'-9 3/8" WAS 2'-8 3/8" - 4'-4" WAS 4'				

PROJ	NO.	REVISION	RVSD	CHKD	APPD	DATE
951965	1	GENERAL REVISIONS TO ACCOMMODATE NEW PROCESS LAYOUT	2-20-80 8-15-80	2-11-80 8-16-80	VM	2-28-80 8-28-80
	2	306.5 WAS 305.38 & 302.25 WAS 299.13				
	5	8'-9 WAS 6'-7 1/16" & 25'-7 1/2 WAS 22'-6 1/16"				
	7	26'-0 5/16 WAS 22'-10 7/8" & ADD FIN GRD				
	9-10	ADD SECT F-F				
	11	ADD ANCHOR BOLTS				
	12-13	3'-10 7/8 WAS 3'-9 7/8				
	14-15	4'-4 WAS 4'-5				
	16-17	4'-2 3/8 WAS 4'-0				
	18-19	2'-2 3/8 WAS 2'-0				

STANDARDS	
BGL	
B2L	

REFERENCE DRAWINGS	
W714950	CONC. PLANS
W714939	CIVIL
W714971	PROCESS
W714332	PROCESS
W716681	CONC. DETS

THIS DRAWING HAS BEEN FURNISHED BY E. I. DU PONT DE NEMOURS & CO. THE INFORMATION AND KNOW-HOW THEREON MAY NOT BE USED NOR THE DRAWING REPRODUCED WITHOUT THE WRITTEN PERMISSION OF DU PONT. ALL REPRODUCTIONS IN WHOLE OR IN PART, INCLUDING VENDOR'S SHOP DRAWINGS, SHALL BEAR OR REFER TO THIS STAMP.

		DATE
PROJECT	951965	
SCALE	1/4"=1'-0 U.N.	
DRAWN	R.R. RIEDEL	1-12-80
CHECKED	B.P.	1/14/80
APPROVED-I.C.R.		2/4/80
APPROVED-FINAL		5-22-80

E. I. DU PONT DE NEMOURS & CO., INC.
WILMINGTON, DELAWARE
ENGINEERING DEPARTMENT

W714951