Omaha Public Power District
Fort Calhoun Station Unit No. 1

Annual Report
For
Technical Specification
Section 5.9.4.a

January 1, 2010 to December 31, 2010

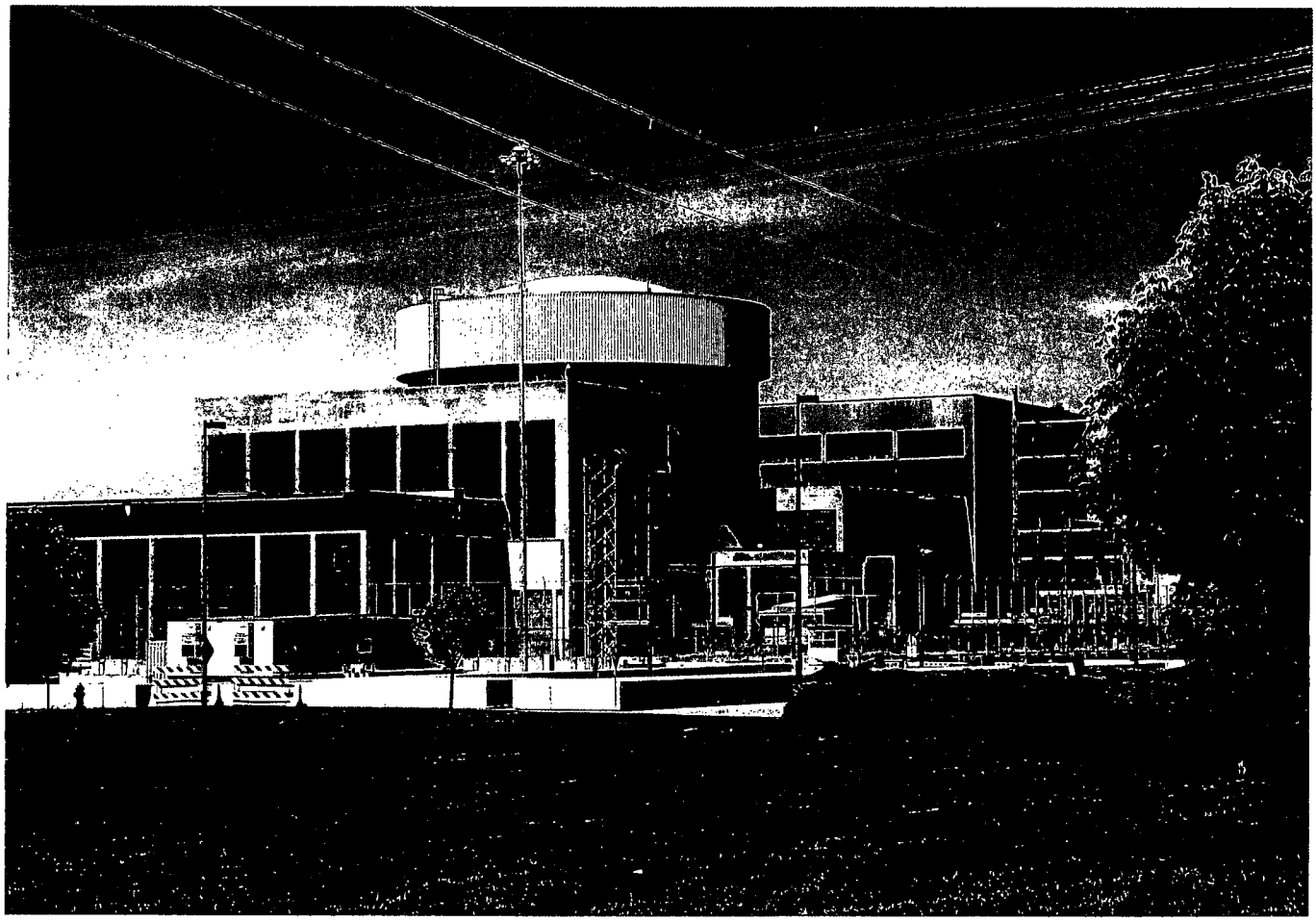

DOCKET NO. 50-285 OPERATING LICENSE DPR-40

Omaha Public Power District
Fort Calhoun Station Unit No. 1

Annual Report
For
Technical Specifications,
Section 5.9.4.a

January 1, 2010 to December 31, 2010

DOCKET NO. 50-285 OPERATING LICENSE DPR-40

Annual Radiological Effluent Release Report

This report is submitted in accordance with Section 5.9.4.a of the Technical Specifications of Fort Calhoun Station Unit No. 1, Facility Operating License DPR-40 for the period January 1, 2010 through December 31, 2010. The Effluent Report is presented in the format outlined in Regulatory Guide 1.21, Revision 1.

In addition, this report provides the results of quarterly dose calculations performed in accordance with the Offsite Dose Calculation Manual. Results are presented by quarter for the period January 1, 2010 through December 31, 2010.

Descriptions of any changes made during the preceding twelve months to the Offsite Dose Calculation Manual and/or the Process Control Program for the Fort Calhoun Station are presented.

PRC RECOMMENDS APPROVAL

MAR 3 0 2011

PRC MTG. MINUTES

Timothy Nellenbach
Division Manager Nuclear Operations/Plant Manager

TABLE OF CONTENTS

Section	Section Title	
I.	1.0	**Introduction**
		1.1 Executive Summary
	2.0	**Supplemental Information**
		2.1 Regulatory Limits
		2.2 Effluent Concentration Limits
		2.3 Measurements and Approximations of Total Radioactivity
		2.4 Estimation of Total Percent Error
		2.5 Batch Releases
		2.6 Abnormal Releases
	3.0	**Gaseous Effluents**
	4.0	**Liquid Effluents**
	5.0	**Solid Wastes**
	6.0	**Related Information**
		6.1 Operability of Liquid and Gaseous Monitoring Instrumentation
		6.2 Changes to Offsite Dose Calculation Manual (ODCM) or Process Control Program (PCP)
		6.3 New Locations or Modifications for Dose Calculations or Environmental Monitoring
		6.4 Noncompliance with Radiological Effluent Control Requirements
		6.5 Modifications to Liquid and Gaseous Waste Treatment and Ventilation Exhaust Systems
		6.6 Meteorological Monitoring Program
		6.7 Assessment of Doses
		6.8 Groundwater Monitoring Program and Observations
II.	**Quarterly Doses from Effluents, Offsite Dose Calculation Manual**	

TABLE OF CONTENTS

III. Radiological Effluent Releases, Technical Specification (5.9.4.a)

Table III.1; Batch Liquid and Gas Release Summary
Table III.2; Abnormal Batch Liquid and Gaseous Release Summary
Table III.3; Gaseous Effluents - Summation of All Releases
Table III.4; Gaseous Effluent Releases - Batch Mode
Table III.5; Gaseous Effluent Releases - Continuous Mode
Table III.6; Liquid Effluents - Summation of All Releases
Table III.7; Liquid Effluent Releases - Batch Mode
Table III.8; Liquid Effluent Releases - Continuous Mode
Table III.9; Groundwater Analysis Results

IV. Dose From Gaseous Effluents - GASPAR II Output

Tables IV-A-1 through IV-A-39 - Receptor Dose Projections
Table IV-B-1 - Dose Contributions at Unrestricted Area Boundary
Table IV-C-1 - ALARA Annual Integrated Dose Summary

V. Dose From Liquid Effluents - LADTAP II Output

Summary Dose Projections from Liquid Effluent Releases

VI. Radioactive Effluent Releases-Solid Radioactive Waste, Technical Specification (5.9.4.a)

VII. ATTACHMENTS

1. Joint Frequency Distribution Wind Direction vs. Wind Speed by Stability Class and Meteorological Data

1.0 INTRODUCTION

This Annual Radiological Effluent Release Report, for Fort Calhoun Station Unit No. 1, is submitted as required by Technical Specification 5.9.4.a for the period January 1, 2010 through December 31, 2010.

1.1 Executive Summary

The Radioactive Effluent Monitoring program for the year 2010 was conducted as described in the following report. Major efforts were made to maintain the release of radioactive effluents to the environment as low as reasonably achievable.

The total airborne activity released from noble gas was 2.02 curies. This was a decrease from the 2009 activity of 3.50 curies. This decrease is attributed to 2010 being a non-refueling outage year.

There was no release of airborne activity from I-131, I-133, and particulates with half lives > 8 days in 2010. This was a decrease from the 2009 activity of 4.35E-05 curies. This decrease is attributed to 2010 being a non-refueling outage year.

The total airborne activity from Tritium was 2.5 curies. This was a decrease from the 2009 activity of 6.53 curies. This decrease is attributed to 2010 being a non-refueling outage year.

A total airborne activity of 2.36 curies from C-14 was included in the 2010 annual report, per Regulatory Guide 1.21, Revision 2. This is a calculated value based on power generation and days of operation. Critical organ doses from C-14 were calculated using a ratio of 15% as CO_2. This ratio was determined during an NRC in-plant source term study conducted at the Fort Calhoun Station between 1976 and 1977, NUREG/CR-0140.

Dose contributions from airborne effluents at the unrestricted area boundary were; 3.36-03 mRad gamma air dose,1.60E-03 mRad beta air dose, 1.58E-01 mRem total body dose, and 7.72E-01 mRem critical organ dose. All doses were a decrease from 2009, except for critical organ dose, which increased from 1.37E-02 mRem, due to the addition of C-14.

Total water activity (excluding tritium, dissolved gases, and alpha) released in 2010 in liquid effluents was 1.98E-03 curies. This was a decrease from the 2009 activity of 2.67E-03 curies. This decrease is attributed to improved waste management and that 2010 was a non-refueling outage year.

The total water tritium activity released in 2010 in liquid effluents was 178.3 curies. This was a decrease from the 2009 activity of 221.0 curies. This decrease is attributed to 2010 being a non-refueling outage year.

The calculated whole body dose due to liquid effluents at the site discharge from all sources in 2010 was 2.35E-02 mRem. This was a decrease from the 2009 dose of 2.80E-02 mRem due to improved waste management.

The calculated critical organ dose due to liquid effluents at the site discharge from all sources in 2010 was 3.18E-02 mRem. This was an increase from the 2009 dose of 3.06E-02 mRem due to an increase of Cs-134 and Cs-137 in liquid discharges caused by degraded process resin performance.

The Fort Calhoun Station meteorological system achieved a cumulative availability rate of 94.52% for the joint frequency parameters required by Regulatory Guide 1.23 of wind speed, wind direction, and delta temperature.

There were no abnormal releases during 2010.

During 2010 there were was one change to the Offsite Dose Calculations Manual (ODCM) and no changes to the Process Control Program (PCP).

A revision to the PCP that was not reported in the 2006 Annual Report was added to the 2010 Annual Report.

For 2010, the total volume of buried solid radwaste was 64.22 cubic meters. This was a decrease from the 75.44 cubic meters of solid waste buried in 2009.

The total buried activity for 2010 was 3.50 curies, 2.17 curies from spent resin and 1.33 curies from dry compressables. This was a decrease from the 2009 value of 5.39 curies. Overall, the radioactive effluent monitoring program was conducted in a manner to ensure the activity released and associated dose to the public were maintained as low as reasonably achievable.

2.0 SUPPLEMENTAL INFORMATION

2.1 Regulatory Limits

The ODCM Radiological Effluent Control Specifications applicable to the release of radioactive material in liquid and gaseous effluents are described in the following sections.

2.1.1 Fission and Activation Gases (Noble Gases)

The release rate of radioactive material in airborne effluents shall be controlled such that the instantaneous concentrations of radionuclides do not exceed the values specified in 10 CFR 20 for airborne effluents at the unrestricted area boundary. To support plant operations, Supervisor - System Chemistry may increase this limit up to the limits specified in Technical Specification 5.16.1.g.

Technical Specification 5.16.1.g establishes the administrative control limit on the concentration resulting from radioactive material, other than noble gases, released in gaseous effluents to unrestricted areas conforming to ten times 10 CFR 20.1001-20.2401, Appendix B, Table 2, Column 1. For noble gases, the concentration shall be limited to five times 10 CFR 20.1001-20.2401, Appendix B, Table 2, Column 1.

The air dose due to noble gases released in gaseous effluents to areas at or beyond the unrestricted area boundary shall be limited to the following:

a. During any calendar quarter: Less than or equal to 5 mRad for gamma radiation and less than or equal to 10 mRad for beta radiation, and

b. During any calendar year: Less than or equal to 10 mRad for gamma radiation and less than or equal to 20 mRad for beta radiation.

2.1.2 Doses from I-131, I-133, C-14, Tritium, and Radioactive Material in Particulate Form with Half Lives Greater than 8 Days (Other than Noble Gases).

a. The dose to an individual or dose commitment to any organ of an individual in unrestricted areas due to the release of I-131, I-133, C-14, H-3, and radioactive

material in particulate form with half-lives greater than eight days (other than noble gases) in airborne effluents shall not exceed 7.5 millirem from all exposure pathways during any calendar quarter.

b. The dose to an individual or dose commitment to any organ of an individual in unrestricted areas due to the release of I-131, I-133, C-14, H-3, and radioactive materials in particulate form with half-lives greater than eight days (other than noble gases) in airborne effluents shall not exceed 15 millirem from all exposure pathways during any calendar year.

2.1.3 Liquid Effluents

The release rate of radioactive material in liquid effluents shall be controlled such that the instantaneous concentrations for radionuclides, other than dissolved or entrained noble gases, do not exceed the values specified in 10 CFR 20 for liquid effluents at site discharge. To support plant operations, the Supervisor - System Chemistry may increase this limit up to the limit specified in Technical Specifications 5.16.1.b.

Technical Specification 5.16.1.b establishes the administrative control limit on concentration of radioactive material, other than dissolved or entrained noble gases, released in liquid effluents to unrestricted areas conforming to ten times 10 CFR 20.1001-20.2401, Appendix B, Table 2, Column 2. For dissolved or entrained noble gases, the concentration shall be limited to 2.0E-04 µCi/mL total activity.

The dose or dose commitment to a MEMBER OF THE PUBLIC from radioactive materials in liquid effluents released to unrestricted areas shall be limited to:

a. During any calendar quarter: Less than or equal to 1.5 mRem to the whole body and less than or equal to 5 mRem to any organ, and

b. During any calendar year: Less than or equal to 3 mRem to the whole body and less than or equal to 10 mRem to any organ.

2.1.4 Total Dose-Uranium Fuel Cycle

The dose to any individual from uranium fuel cycle sources shall be limited to ≤ 25 mRem to the total body or any organ (except the thyroid, which shall be limited to ≤ 75 mRem) during each calendar year.

2.2 Effluent Concentration Limits (ECL)

2.2.1 Liquid Effluents

The values specified in 10 CFR Part 20, Appendix B, Column 2 are used as the ECL for liquid radioactive effluents released to unrestricted areas. A value of 2.0E-04 µCi/mL is used as the ECL for dissolved and entrained noble gases in liquid effluents.

2.2.2 Gaseous Effluents

The values specified in 10 CFR Part 20, Appendix B, Column 1 are used as the ECL for gaseous radioactive effluents released to unrestricted areas.

2.3 Measurements and Approximations of Total Radioactivity

Measurements of total radioactivity in liquid and gaseous radioactive effluents were accomplished in accordance with the sampling and analysis requirements of Tables 3.1 and 3.2 of Part I of the ODCM.

2.3.1 Liquid Radioactive Effluents

Each batch was sampled and analyzed for gamma emitting radionuclides using gamma spectroscopy, prior to release. Composite samples were analyzed monthly and quarterly for the Monitor and Hotel Waste Tanks. Composite samples were analyzed monthly in the onsite laboratory for tritium and gross alpha radioactivity, using liquid scintillation and proportional counting techniques respectively. Composite samples were analyzed quarterly for Sr-89, Sr-90, Fe-55, Ni-63, and Gross Alpha by a contract laboratory (Teledyne Brown Engineering, Inc.). A software program was used to project the total body and critical organ dose contribution at the unrestricted area boundary for each release and the percent contribution to the annual objective dose.

For continuous releases from the Steam Generator blowdown, daily grab samples were obtained for weekly, monthly and quarterly composites, in proportion to the rate of blowdown. Samples were analyzed using gamma spectroscopy techniques weekly. Composites were also analyzed monthly in the onsite laboratory for tritium and gross alpha radioactivity using liquid scintillation and proportional counting techniques, respectively. Composite samples were analyzed quarterly for Sr-89, Sr-90, Fe-55, and Gross Alpha by a contract laboratory (Teledyne Brown Engineering, Inc.).

2.3.2 Gaseous Radioactive Effluents

Each gaseous batch release was sampled and analyzed for radioactivity prior to release. For release of Waste Gas Decay Tanks, noble gas grab samples were analyzed for gamma emitting radionuclides using gamma spectroscopy. For releases from the Containment Building, samples were taken using charcoal and particulate filters, in addition to noble gas and Tritium grab samples, and analyzed for gamma emitting radionuclides prior to each release. The results of the analysis and the total volume of effluent released were used to determine the total amount of radioactivity released in the batch mode. A software program was developed and installed that can project the total body and critical organ dose contribution at the unrestricted area boundary for each release and the percent contribution to the annual objective dose. This program also adds the projected dose to the current actual dose totals in a temporary file, until it is updated with actual release data at the completion of a purge.

Continuous release effluent pathways were continuously sampled using charcoal and particulate filters and analyzed weekly for gamma emitting radionuclides using gamma spectroscopy. Weekly particulate filters were analyzed for gross alpha radioactivity in the onsite laboratory using proportional counting techniques. Quarterly composites of particulate filters were analyzed for Sr-89, Sr-90, and Gross Alpha by a contract laboratory (Teledyne Brown Engineering, Inc.).

2.4 Estimation of Total Percent Error

The estimated total percent error is calculated as follows:

Total Percent Error = $(E_1^2 + E_2^2 + E_3^2 + ... + E_n^2)^{0.5}$
Where E_n = percent error associated with each contributing parameter.

Sample counting error is estimated by the Canberra Genie System Software for samples analyzed by gamma spectroscopy. This calculation can include the error associated with peak area determination, gamma ray abundance, efficiency and half-life. Systematic error is estimated for gaseous and liquid effluent analyses and dilution and wastewater volume.

2.5 Batch Releases

A summary of information for liquid and gaseous batch releases is included in Table III.1.

2.6 Abnormal Releases

Abnormal Releases are defined as unplanned and unmonitored releases of radioactive material from the site.

A summary of information for liquid and gaseous abnormal releases is included in Table III.2.

3.0 GASEOUS EFFLUENTS

The quantities of radioactive material released in gaseous effluents are summarized in Tables III.3, III.4 and III.5. All radioactive materials released in gaseous form are considered to be ground level releases.

4.0 LIQUID EFFLUENTS

The quantities of radioactive material released in liquid effluents are summarized in Tables III.6, III.7 and III.8.

5.0 SOLID WASTES

The quantities of radioactive material released as solid effluents are summarized in Section VI.

6.0 RELATED INFORMATION

6.1 Operability of Liquid and Gaseous Monitoring Instrumentation

During the reporting period there were no instruments used to monitor radioactive effluent releases that failed to meet the reportable instrument operability requirements listed in the ODCM during the reporting period.

6.2 Changes to the Offsite Dose Calculation Manual (ODCM) and/or Process Control Program (PCP)

During 2010, the following changes were made to the ODCM:

- Updated definitions and guidance of reporting of Abnormal releases and discharges per Revision 2 of Regulatory Guide 1.21.
- Added basis for regulatory exemptions for reduced frequency of the Land Use Survey.
- Updated the Annual Average D/Q value used for highest resident pathway dose projections.
- Revised the definition of the term "Operable" to be consistent with Tech Specs, as part of Tech Spec Amendment No. 264 (NRC-10-0033).
- Added new environmental TLD locations for inner and outer rings all sectors, per guidance in NUREG 1301.

During 2010, there were no changes made to the PCP.

During 2006 the following change was made to the PCP:

- Provided requirements for Dry Fuel Storage implementation.

6.3 New Locations or Modifications for Dose Calculations or Environmental Monitoring

- 32 TLD locations were added to the environmental monitoring program.

6.4 Noncompliance with Radiological Effluent Control Requirements

This section provides a list of any event that did not comply with the applicable requirements of the Radiological Effluent Controls given in the Offsite Dose Calculation Manual (ODCM). Detailed documentation concerning the evaluations and corrective actions is maintained onsite.

6.4.1 Abnormal Gaseous and Liquid Releases

No abnormal releases were made during the calendar year of 2010.

6.4.2 Failure to Meet Specified Sampling Requirements

During 2010, there were no instances in which specified sampling requirements were not met.

6.5 Modifications to Liquid and Gaseous Waste Treatment and Ventilation Exhaust Systems

During the reporting period no design modifications were approved nor implemented involving major changes to the Liquid and Gaseous Waste Treatment Systems.

6.6 Meteorological Monitoring Program

A summary of hourly meteorological data, collected during 2010, is retained onsite. This data is available for review by the Nuclear Regulatory Commission upon request. Joint Frequency tables are included in Section VII, Attachment 2.

Real time hourly meteorological data is used to calculate the annual air effluent dose to individuals. For quarterly estimates during the year an annual average X/Q is used, which is an average of the highest X/Q's calculated for each of the previous two years.

6.7 Assessment of Doses

6.7.1 Doses Due to Liquid Effluents

Total body, skin, and organ dose for liquid releases were calculated in mRem for all significant liquid pathways using the annual configuration of the LADTAP II program. The site discharge location was chosen to present a most

conservative estimate of dose for an average adult, teenager, child, and infant. A conservative approach is also presented by the assumption that Omaha and Council Bluffs receive all drinking water from the Missouri River.

The LADTAP II program in its annual configuration was also used to calculate the total body and organ doses for the population of 853,274 within a 50-mile radius of the plant (based on the 2000 census). The results of the calculations are listed in Section V.

The doses due to liquid effluents for total body and critical organ are also calculated quarterly using the methods in the ODCM. The results are listed in Section II.

6.7.2 Doses Due to Gaseous Effluents

Total body, skin and organ doses from ground releases were calculated in mRem to an average adult, teenager, child, and infant in each receptor using the annual configuration of the GASPAR II program. Also, the doses to the same groups, in units of mRad due to gamma and beta radiation carried by air, were computed using GASPAR II.
The GASPAR II program in its annual configuration was also used to calculate the ALARA integrated population dose summary for the total body, skin and organ doses in person-rem for all individuals within a 50-mile radius. The results of the calculations are shown in Section IV.

The doses due to gaseous effluents for total body gamma and beta noble gas air dose are calculated quarterly using the methods in the ODCM with an annual average X/Q. The results are listed in Section II.

6.7.3 Doses Due to I-131, I-133, C-14, H-3, and Particulates with Half Lives Greater than 8 days.

The doses due to I-131, I-133, C-14, H-3, and Particulates with half lives greater than 8 days for total body and critical organ dose are calculated quarterly using the highest of infant or child dose factors and an annual average X/Q. The results are listed in Section II for inhalation, ground and food.

6.7.4 Direct Radiation Dose to Individuals and Populations

Direct radiation doses attributed to the gamma radiation emitted from the containment structure were not observed above local background at any TLD sample locations for this annual period.

6.7.5 40 CFR 190 Dose Evaluation

ODCM Radiological Effluent Controls require dose evaluations to demonstrate compliance with 40 CFR Part 190 only if calculated yearly doses exceed two times the annual design objectives for liquid and/or gaseous effluents. At no time during 2010 were any of these limits exceeded; therefore, no evaluations were required.

6.8 Groundwater Monitoring Program and Observations

- OPPD conducted groundwater sampling from 19 wells, 2 surface water sites, and 2 storm water headers within the site property per NEI 07-07.

- No new monitoring wells were added to the sampling program during 2010.

- Well MW-4A identified Sr-90 activity in excess of the vendor's Minimum Detectable Activity (MDA) in the 1st quarter as shown on Table III.9. All other Table III.9 Sr-90 reported concentrations represent values greater than a 2 sigma threshold but less than MDA, which are evaluated by the plant staff as required by the site groundwater monitoring program. EPRI Report No. 1011730, Groundwater Monitoring Guidance for Nuclear Power Plants, documents plant shallow monitoring well Sr-90 results as typically showing a positive bias toward detection (i.e. background greater than zero). The Fort Calhoun Station Sr-90 results reflect this same bias. Although the data set is too small to perform a complete statistical analysis, the measured values have not exceeded a threshold by which the results could be called "significantly different" from a true background value and therefore cannot be attributed to a plant environmental impact. The results are all below NRC, EPA, NEI and FCS groundwater protection program administrative reporting limits.

- Tritium activity was identified in MW-6, which is located in close proximity to the riverbank, downstream of the plant discharge tunnel, during the first and second quarters. During high river conditions, bank recharge occurs. This recharge impacts the hydro-geologic conditions at this well and is the suspected cause of the positive results.

- The Fort Calhoun REMP sampling showed no detected tritium within the Missouri River downstream at the sight boundary or at the nearest municipal drinking water facility. No groundwater drinking pathway exists on site. No state or federal drinking water limits, and no site groundwater protection program administrative limits were exceeded. A bounding dose calculation using EPA and Fort Calhoun ODCM methodology was performed using the highest tritium results from MW-6 as if that result were being consumed for a year even though no pathway exists. The results (0.104 mrem/yr and 0.022 mrem/yr) are well below NRC and federal limits.

- The second round of semiannual storm water sampling was not performed due to high river levels submerging the sampling locations.

SECTION II

QUARTERLY DOSES FROM EFFLUENTS

Offsite Dose Calculation Manual

January 1, 2010 - December 31, 2010

Quarterly Dose Calculation Results

January 1, 2010 through December 31, 2010

With the implementation of the Fort Calhoun Station Radiological Effluent Technical Specifications (RETS) on October 1, 1985, radiation doses in the unrestricted area from liquid and gaseous effluents must be calculated on a quarterly basis in accordance with the Offsite Dose Calculation Manual (ODCM). These calculations are performed to ensure the annual dose limits delineated in Appendix I of 10 CFR 50 and implemented by RETS are not exceeded. If the results of the quarterly calculations exceed fifty percent (50%) of the annual limits of Appendix I, actions are taken to reduce effluents so that the resultant doses do not exceed the annual limits during the remainder of the year and a special report is submitted to the Nuclear Regulatory Commission. No special reports were required for 2010 calculated doses.

This section presents the results of the quarterly dose calculations performed during the period January 1, 2010 through December 31, 2010. Details are shown as to the types, sources and resultant doses from the effluents, the annual limits and a comparison to the annual limits.

QUARTERLY CUMULATIVE DOSE CONTRIBUTION FROM RADIOACTIVE EFFLUENTS
FORT CALHOUN FIRST QUARTER 2010 DOSE PROJECTIONS

I. Liquid Effluents:	Total Body Dose (mrem)	Critical Organ Dose (mrem)
Batch:	9.82E-04	1.27E-03
Continuous:	0.00E+00	0.00E+00
Totals:	9.82E-04	1.27E-03
ODCM Quarterly Objective:	1.50E+00	5.00E+00
Percent of Quarterly Obj:	0.07 %	0.03 %
ODCM Annual Objective:	3.00E+00	1.00E+01
YTD Percent of Annual Obj:	0.03 %	0.01 %

II. Gaseous Effluents:	Total Body Gamma Dose (mrad)	Total Body Beta Dose (mrad)
A. Noble Gas Air Dose:	9.31E-04	4.37E-04
ODCM Quarterly Objective:	5.00E+00	1.00E+01
Percent of Quarterly Obj:	0.02 %	0.00 %
ODCM Annual Objective:	1.00E+01	2.00E+01
YTD Percent of Annual Obj:	0.01 %	0.00 %

B. I-131, I-133, Tritium, C-14, and Particulates with Half-Lives > 8 Days:	Total Body Dose (mrem)	Critical Organ Dose (mrem)
Inhalation:	2.10E-04	2.10E-04
Ground and Food:	4.89E-02	2.40E-01
Totals:	4.91E-02	2.40E-01
ODCM Quarterly Objective:	7.50E+00	7.50E+00
Percent of Quarterly Obj:	0.65 %	3.20 %
ODCM Annual Objective:	1.50E+01	1.50E+01
YTD Percent of Annual Obj:	0.33 %	1.60 %

Reviewed by: _____

QUARTERLY CUMULATIVE DOSE CONTRIBUTION FROM RADIOACTIVE EFFLUENTS
FORT CALHOUN SECOND QUARTER 2010 DOSE PROJECTIONS

I. Liquid Effluents:	Total Body Dose (mrem)	Critical Organ Dose (mrem)
Batch:	7.04E-03	7.32E-03
Continuous:	0.00E+00	0.00E+00
Totals:	7.04E-03	7.32E-03
ODCM Quarterly Objective:	1.50E+00	5.00E+00
Percent of Quarterly Obj:	0.47 %	0.15 %
ODCM Annual Objective:	3.00E+00	1.00E+01
YTD Percent of Annual Obj:	0.27 %	0.09 %

II. Gaseous Effluents:	Total Body Gamma Dose (mrad)	Total Body Beta Dose (mrad)
A. Noble Gas Air Dose:	9.81E-04	4.66E-04
ODCM Quarterly Objective:	5.00E+00	1.00E+01
Percent of Quarterly Obj:	0.02 %	0.00 %
ODCM Annual Objective:	1.00E+01	2.00E+01
YTD Percent of Annual Obj:	0.02 %	0.00 %

B. I-131, I-133, Tritium, C-14, and Particulates with Half-Lives > 8 Days:	Total Body Dose (mrem)	Critical Organ Dose (mrem)
Inhalation:	1.93E-04	1.93E-04
Ground and Food:	4.64E-02	2.27E-01
Totals:	4.66E-02	2.27E-01
ODCM Quarterly Objective:	7.50E+00	7.50E+00
Percent of Quarterly Obj:	0.62 %	3.03 %
ODCM Annual Objective:	1.50E+01	1.50E+01
YTD Percent of Annual Obj:	0.64 %	3.11 %

Reviewed by: _____

QUARTERLY CUMULATIVE DOSE CONTRIBUTION FROM RADIOACTIVE EFFLUENTS
FORT CALHOUN THIRD QUARTER 2010 DOSE PROJECTIONS

I. Liquid Effluents:	Total Body Dose (mrem)	Critical Organ Dose (mrem)
Batch:	4.38E-03	4.67E-03
Continuous:	0.00E+00	0.00E+00
Totals:	4.38E-03	4.67E-03
ODCM Quarterly Objective:	1.50E+00	5.00E+00
Percent of Quarterly Obj:	0.29 %	0.09 %
ODCM Annual Objective:	3.00E+00	1.00E+01
YTD Percent of Annual Obj:	0.41 %	0.13 %

II. Gaseous Effluents:	Total Body Gamma Dose (mrad)	Total Body Beta Dose (mrad)
A. Noble Gas Air Dose:	1.14E-03	5.45E-04
ODCM Quarterly Objective:	5.00E+00	1.00E+01
Percent of Quarterly Obj:	0.02 %	0.01 %
ODCM Annual Objective:	1.00E+01	2.00E+01
YTD Percent of Annual Obj:	0.03 %	0.01 %

B. I-131, I-133, Tritium, C-14, and Particulates with Half-Lives > 8 Days:	Total Body Dose (mrem)	Critical Organ Dose (mrem)
Inhalation:	2.62E-04	2.62E-04
Ground and Food:	4.56E-02	2.22E-01
Totals:	4.58E-02	2.22E-01
ODCM Quarterly Objective:	7.50E+00	7.50E+00
Percent of Quarterly Obj:	0.61 %	2.96 %
ODCM Annual Objective:	1.50E+01	1.50E+01
YTD Percent of Annual Obj:	0.94 %	4.60 %

Reviewed by: _____

QUARTERLY CUMULATIVE DOSE CONTRIBUTION FROM RADIOACTIVE EFFLUENTS
FORT CALHOUN FOURTH QUARTER 2010 DOSE PROJECTIONS

I. Liquid Effluents:	Total Body Dose (mrem)	Critical Organ Dose (mrem)
Batch:	1.03E-02	1.43E-02
Continuous:	0.00E+00	0.00E+00
Totals:	1.03E-02	1.43E-02
ODCM Quarterly Objective:	1.50E+00	5.00E+00
Percent of Quarterly Obj:	0.69 %	0.29 %
ODCM Annual Objective:	3.00E+00	1.00E+01
YTD Percent of Annual Obj:	0.68 %	0.28 %

II. Gaseous Effluents:	Total Body Gamma Dose (mrad)	Total Body Beta Dose (mrad)
A. Noble Gas Air Dose:	9.52E-04	4.56E-04
ODCM Quarterly Objective:	5.00E+00	1.00E+01
Percent of Quarterly Obj:	0.02 %	0.00 %
ODCM Annual Objective:	1.00E+01	2.00E+01
YTD Percent of Annual Obj:	0.04 %	0.01 %

B. I-131, I-133, Tritium, C-14, and Particulates with Half-Lives > 8 Days:	Total Body Dose (mrem)	Critical Organ Dose (mrem)
Inhalation:	1.58E-04	1.58E-04
Ground and Food:	4.69E-02	2.30E-01
Totals:	4.71E-02	2.31E-01
ODCM Quarterly Objective:	7.50E+00	7.50E+00
Percent of Quarterly Obj:	0.63 %	3.07 %
ODCM Annual Objective:	1.50E+01	1.50E+01
YTD Percent of Annual Obj:	1.26 %	6.14 %

Reviewed by: _____

SECTION III
RADIOLOGICAL EFFLUENT RELEASES
Technical Specification (5.9.4.a)

Table III.1 Batch Liquid and Gas Release Summary
Table III.2 Abnormal Batch Liquid and Gaseous Release Summary
Table III.3 Gaseous Effluents - Summation of all Releases
Table III.4 Gaseous Effluent Releases - Batch Mode
Table III.5 Gaseous Effluent Releases - Continuous Mode
Table III.6 Liquid Effluents - Summation of all Releases
Table III.7 Liquid Effluent Releases - Batch Mode
Table III.8 Liquid Effluent Releases - Continuous Mode
Table III.9 Groundwater Tritium Results

January 1, 2010 - December 31, 2010

TABLE III.1

BATCH LIQUID AND GASEOUS RELEASE SUMMARY

JANUARY THROUGH DECEMBER 2010

A. Liquid Releases All Sources	1st Quarter	2nd Quarter	3rd Quarter	4th Quarter
1. Number of Batch Releases:	21	28	23	39
2. Total Time Period for Batch Releases(min):	2,500	2,998	2,618	4,180
3. Maximum Time Period for Batch Releases(min):	240	144	171	123
4. Average Time Period for Batch Releases(min):	119	107	114	107
5. Minimum Time Period for Batch Releases(min):	90	68	97	90
6. Average Dilution Stream Flow During Periods of Release into the Missouri River(mls/min):	9.087E+08	9.898E+08	9.087E+08	8.854E+08

B. Gaseous Releases All Sources	1st Quarter	2nd Quarter	3rd Quarter	4th Quarter
1. Number of Batch Releases:	15	15	17	18
2. Total Time Period for Batch Releases(min):	93,402	101,125	110,521	99,051
3. Maximum Time Period for Batch Releases(min):	7,947	7,975	9,222	7,932
4. Average Time Period for Batch Releases(min):	6,227	6,742	6,501	5,503
5. Minimum Time Period for Batch Releases(min):	118	354	164	132

TABLE III.2

ABNORMAL BATCH LIQUID AND GASEOUS RELEASE SUMMARY

JANUARY THROUGH DECEMBER 2010

A. Liquid Releases All Sources	1st Quarter	2nd Quarter	3rd Quarter	4th Quarter
Number of Releases:	0	0	0	0
Total Activity Releases(Ci):	0.00E+00	0.00E+00	0.00E+00	0.00E+00

B. Gaseous Releases All Sources				
Number of Releases:	0	0	0	0
Total Activity Releases (Ci):	0.00E+00	0.00E+00	0.00E+00	0.00E+00

TABLE III.3

GASEOUS EFFLUENTS--SUMMATION OF ALL RELEASES

JANUARY THROUGH DECEMBER 2010

	1st Quarter	2nd Quarter	3rd Quarter	4th Quarter
A. Fission & Activation Gases				
Total Release (Ci):	4.57E-01	4.93E-01	5.83E-01	4.89E-01
Avg. Release Rate for period (uCi/sec):	5.94E-02	6.35E-02	7.42E-02	6.22E-02
Total Error (%): 27.28				
B. Iodines				
Total Release (Ci):	0.00E+00	0.00E+00	0.00E+00	0.00E+00
Avg. Release Rate for period (uCi/sec):	0.00E+00	0.00E+00	0.00E+00	0.00E+00
Total Error (%): 21.2				
C. Particulates				
Total Release (Ci):	0.00E+00	0.00E+00	0.00E+00	0.00E+00
Avg. Release Rate for period (uCi/sec):	0.00E+00	0.00E+00	0.00E+00	0.00E+00
Total Error (%): 20.62				
Gross Alpha:	0.00E+00	0.00E+00	0.00E+00	0.00E+00
Total Error (%): 20.62				
D. Tritium				
Total Release (Ci):	6.40E-01	5.86E-01	7.96E-01	4.80E-01
Avg. Release Rate for period (uCi/sec):	8.32E-02	7.54E-02	1.01E-01	6.11E-02
Total Error (%): 25.08				
E. Carbon-14				
Total Release (Ci):	6.15E-01	5.83E-01	5.69E-01	5.92E-01
Avg. Release Rate for period (uCi/sec):	8.00E-02	7.50E-02	7.24E-02	7.53E-02
Total Error (%): 25.08				

NOTE: Values reported as zero are determined to be below the Lower Limit of Detection (LLD).

TABLE III.4

GASEOUS EFFLUENTS--GROUND LEVEL RELEASES

JANUARY THROUGH DECEMBER 2010

Batch Mode

Nuclides(Ci)	1st Quarter	2nd Quarter	3rd Quarter	4th Quarter
Fission & Activation Gases				
XE-133	2.36E-01	2.60E-01	3.14E-01	2.64E-01
XE-135	1.16E-02	1.27E-02	1.39E-02	1.24E-02
KR-85	3.28E-04	0.00E+00	0.00E+00	0.00E+00
XE-133M	0.00E+00	5.87E-04	0.00E+00	0.00E+00
AR-41	2.09E-01	2.20E-01	2.56E-01	2.13E-01
Totals for Period:	4.57E-01	4.93E-01	5.83E-01	4.89E-01
Iodines				
Totals for Period:	0.00E+00	0.00E+00	0.00E+00	0.00E+00
Particulates				
Totals for Period:	0.00E+00	0.00E+00	0.00E+00	0.00E+00
Tritium and Gross Alpha				
H-3	8.32E-02	1.33E-01	2.42E-01	6.66E-02

NOTE: Values reported as zero are determined to be below the Lower Limit of Detection (LLD).

TABLE III.5

GASEOUS EFFLUENTS--GROUND LEVEL RELEASES

JANUARY THROUGH DECEMBER 2010

Continuous Mode

Nuclides(Ci)	1st Quarter	2nd Quarter	3rd Quarter	4th Quarter
Fission & Activation Gases				
Totals for Period:	0.00E+00	0.00E+00	0.00E+00	0.00E+00
Iodines				
Totals for Period:	0.00E+00	0.00E+00	0.00E+00	0.00E+00
Particulates				
C-14	6.15E-01	5.83E-01	5.69E-01	5.92E-01
Totals for Period:	6.15E-01	5.83E-01	5.69E-01	5.92E-01
Tritium and Gross Alpha				
H-3	5.57E-01	4.53E-01	5.54E-01	4.13E-01

NOTE: Values reported as zero are determined to be below the Lower Limit of Detection (LLD).

TABLE III.6

LIQUID EFFLUENTS--SUMMATION OF ALL RELEASES

JANUARY THROUGH DECEMBER 2010

	1st Quarter	2nd Quarter	3rd Quarter	4th Quarter
A. Fission & Activiation Products				
Total Release (No Tritium, Gas, Alpha) (Ci):	7.77E-04	1.61E-04	8.54E-05	9.54E-04
Avg Diluted Concentration (uCi/mL):	3.42E-10	5.47E-11	3.59E-11	2.58E-10
10 CFR 20, App. B Limit 1.00E-06 uCi/mL Percent of Limit (%):	3.42E-02	5.47E-03	3.59E-03	2.58E-02
Total Error (%): 45.88				
B. Tritium				
Total Release (Ci):	8.64E+00	6.52E+01	4.04E+01	6.41E+01
Avg Diluted Concentration (uCi/mL):	3.80E-06	2.21E-05	1.70E-05	1.73E-05
10 CFR 20, App. B Limit 1.00E-03 uCi/mL Percent of Limit (%):	3.80E-01	2.21E+00	1.70E+00	1.73E+00
Total Error (%): 25.08				
C. Dissolved & Entrained Gases				
Total Release (Ci)	1.56E-05	8.81E-05	7.64E-06	1.29E-04
Avg Diluted Concentration (uCi/mL):	6.88E-12	2.99E-11	3.21E-12	3.49E-11
ODCM Limit 2.00E-04 Percent of Limit (%):	3.44E-06	1.49E-05	1.60E-06	1.74E-05
Total Error (%): 44.74				
D. Gross Alpha Radioactivity				
Total Release (Ci):	0.00E+00	0.00E+00	0.00E+00	0.00E+00
Total Error (%): 27.22				
E. Volume of Waste Released Prior to Dilution (Liters):	4.35E+05	5.68E+05	4.73E+05	7.91E+05
F. Volume of Dilution Water During Releases (Liters):	2.34E+11	2.83E+11	3.84E+11	3.40E+11

NOTE: Values reported as zero are determined to be below the Lower Limit of Detection (LLD).

TABLE III.7

LIQUID EFFLUENTS

JANUARY THROUGH DECEMBER 2010

Batch Mode

Nuclides(Ci)	1st Quarter	2nd Quarter	3rd Quarter	4th Quarter
Fission & Activation Gases				
FE-55	5.92E-04	0.00E+00	0.00E+00	0.00E+00
BE-7	0.00E+00	0.00E+00	0.00E+00	9.56E-07
NB-95	0.00E+00	4.61E-07	0.00E+00	0.00E+00
CS-137	4.09E-05	4.06E-05	4.12E-05	8.74E-04
CS-134	1.12E-06	1.00E-06	5.85E-07	4.25E-05
CO-58	7.33E-05	3.03E-05	1.10E-05	1.02E-05
AG-110M	0.00E+00	4.03E-06	1.11E-06	1.45E-06
BA-140	0.00E+00	0.00E+00	7.67E-07	6.73E-07
SB-125	1.73E-05	3.18E-05	3.40E-06	1.54E-06
SB-124	1.22E-06	0.00E+00	0.00E+00	0.00E+00
CO-60	5.11E-05	5.33E-05	2.72E-05	2.32E-05
Totals for Period:	7.77E-04	1.61E-04	8.54E-05	9.54E-04
Dissolved & Entrained Gases				
XE-133	1.56E-05	8.77E-05	7.43E-06	1.27E-04
XE-135	0.00E+00	4.09E-07	2.01E-07	2.05E-06
Totals for Period:	1.56E-05	8.81E-05	7.64E-06	1.29E-04
Tritium and Gross Alpha				
H-3	8.64E+00	6.52E+01	4.04E+01	6.41E+01

NOTE: Values reported as zero are determined to be below the Lower Limit of Detection (LLD) values.

TABLE III.8
LIQUID EFFLUENTS
JANUARY THROUGH DECEMBER 2010
Continuous Mode

Nuclides(Ci)	1st Quarter	2nd Quarter	3rd Quarter	4th Quarter
Fission & Activation Products				
Totals for Period:	0.00E+00	0.00E+00	0.00E+00	0.00E+00
Dissolved & Entrained Gases				
Totals for Period:	0.00E+00	0.00E+00	0.00E+00	0.00E+00
Tritium and Gross Alpha				
H-3	0.00E+00	0.00E+00	0.00E+00	0.00E+00

NOTE: Values reported as zero are determined to be below the Lower Limit of Detection (LLD).

TABLE III.9

GROUNDWATER ANALYSIS RESULTS

pCi/L

JANUARY THROUGH DECEMBER 2010

		1st Quarter	2nd Quarter	3rd Quarter	4th Quarter
MW-1A					
	Tritium	0.00E+00	0.00E+00	0.00E+00	0.00E+00
	FE-55	0.00E+00	0.00E+00	0.00E+00	0.00E+00
	NI-63	0.00E+00	0.00E+00	0.00E+00	0.00E+00
	Sr-90	0.00E+00	0.00E+00	6.58E-01	0.00E+00
	Total Gamma	0.00E+00	0.00E+00	0.00E+00	0.00E+00
MW-1B					
	Tritium	0.00E+00	0.00E+00	0.00E+00	0.00E+00
	FE-55	0.00E+00	0.00E+00	0.00E+00	0.00E+00
	NI-63	0.00E+00	0.00E+00	0.00E+00	0.00E+00
	Sr-90	0.00E+00	0.00E+00	0.00E+00	0.00E+00
	Total Gamma	0.00E+00	0.00E+00	0.00E+00	0.00E+00
MW-2					
	Tritium	0.00E+00	0.00E+00	0.00E+00	0.00E+00
	FE-55	0.00E+00	0.00E+00	0.00E+00	0.00E+00
	NI-63	0.00E+00	0.00E+00	0.00E+00	0.00E+00
	Sr-90	0.00E+00	0.00E+00	0.00E+00	0.00E+00
	Total Gamma	0.00E+00	0.00E+00	0.00E+00	0.00E+00
MW-2A					
	Tritium	0.00E+00	0.00E+00	0.00E+00	0.00E+00
	FE-55	0.00E+00	0.00E+00	0.00E+00	0.00E+00
	NI-63	0.00E+00	0.00E+00	0.00E+00	0.00E+00
	Sr-90	0.00E+00	0.00E+00	3.72E-01	0.00E+00
	Total Gamma	0.00E+00	0.00E+00	0.00E+00	0.00E+00
MW-2B					
	Tritium	0.00E+00	0.00E+00	0.00E+00	0.00E+00
	FE-55	0.00E+00	0.00E+00	0.00E+00	0.00E+00
	NI-63	0.00E+00	0.00E+00	0.00E+00	0.00E+00
	Sr-90	0.00E+00	0.00E+00	0.00E+00	0.00E+00
	Total Gamma	0.00E+00	0.00E+00	0.00E+00	0.00E+00
MW-3					
	Tritium	0.00E+00	0.00E+00	0.00E+00	0.00E+00
	FE-55	0.00E+00	0.00E+00	0.00E+00	0.00E+00
	NI-63	0.00E+00	0.00E+00	0.00E+00	0.00E+00
	Sr-90	0.00E+00	0.00E+00	0.00E+00	0.00E+00
	Total Gamma	0.00E+00	0.00E+00	0.00E+00	0.00E+00
MW-3A					
	Tritium	0.00E+00	0.00E+00	0.00E+00	0.00E+00
	FE-55	0.00E+00	0.00E+00	0.00E+00	0.00E+00
	NI-63	0.00E+00	0.00E+00	0.00E+00	0.00E+00
	Sr-90	0.00E+00	0.00E+00	0.00E+00	0.00E+00
	Total Gamma	0.00E+00	0.00E+00	0.00E+00	0.00E+00
MW-3B					
	Tritium	0.00E+00	0.00E+00	1.40E+02	0.00E+00
	FE-55	0.00E+00	0.00E+00	0.00E+00	0.00E+00
	NI-63	0.00E+00	0.00E+00	0.00E+00	0.00E+00
	Sr-90	0.00E+00	0.00E+00	0.00E+00	0.00E+00
	Total Gamma	0.00E+00	0.00E+00	0.00E+00	0.00E+00
MW-4A					
	Tritium	0.00E+00	0.00E+00	0.00E+00	0.00E+00
	FE-55	0.00E+00	0.00E+00	0.00E+00	0.00E+00
	NI-63	0.00E+00	0.00E+00	0.00E+00	0.00E+00
	Sr-90	1.00E+00	4.67E-01	4.31E-01	6.56E-01
	Total Gamma	0.00E+00	0.00E+00	0.00E+00	0.00E+00

TABLE III.9

GROUNDWATER ANALYSIS RESULTS

pCi/L

JANUARY THROUGH DECEMBER 2010

		1st Quarter	2nd Quarter	3rd Quarter	4th Quarter
MW-4B					
	Tritium	0.00E+00	0.00E+00	0.00E+00	0.00E+00
	FE-55	0.00E+00	0.00E+00	0.00E+00	0.00E+00
	NI-63	0.00E+00	0.00E+00	0.00E+00	0.00E+00
	Sr-90	0.00E+00	0.00E+00	0.00E+00	0.00E+00
	Total Gamma	0.00E+00	0.00E+00	0.00E+00	0.00E+00
MW-5A					
	Tritium	0.00E+00	0.00E+00	0.00E+00	0.00E+00
	FE-55	0.00E+00	0.00E+00	0.00E+00	0.00E+00
	NI-63	0.00E+00	0.00E+00	0.00E+00	0.00E+00
	Sr-90	0.00E+00	0.00E+00	3.83E-01	8.48E-01
	Total Gamma	0.00E+00	0.00E+00	0.00E+00	0.00E+00
MW-5B					
	Tritium	0.00E+00	0.00E+00	0.00E+00	0.00E+00
	FE-55	0.00E+00	0.00E+00	0.00E+00	0.00E+00
	NI-63	0.00E+00	0.00E+00	0.00E+00	0.00E+00
	Sr-90	0.00E+00	0.00E+00	0.00E+00	0.00E+00
	Total Gamma	0.00E+00	0.00E+00	0.00E+00	0.00E+00
MW-6					
	Tritium	5.20E+02	3.01E+02	0.00E+00	0.00E+00
	FE-55	0.00E+00	0.00E+00	0.00E+00	0.00E+00
	NI-63	0.00E+00	0.00E+00	0.00E+00	0.00E+00
	Sr-90	0.00E+00	0.00E+00	0.00E+00	6.70E-01
	Total Gamma	0.00E+00	0.00E+00	0.00E+00	0.00E+00
MW-7					
	Tritium	0.00E+00	0.00E+00	0.00E+00	0.00E+00
	FE-55	0.00E+00	0.00E+00	0.00E+00	0.00E+00
	NI-63	0.00E+00	0.00E+00	0.00E+00	0.00E+00
	Sr-90	0.00E+00	0.00E+00	7.25E-01	0.00E+00
	Total Gamma	0.00E+00	0.00E+00	0.00E+00	0.00E+00
MW-9					
	Tritium	0.00E+00	0.00E+00	0.00E+00	0.00E+00
	FE-55	0.00E+00	0.00E+00	0.00E+00	0.00E+00
	NI-63	0.00E+00	0.00E+00	0.00E+00	0.00E+00
	Sr-90	0.00E+00	0.00E+00	0.00E+00	0.00E+00
	Total Gamma	0.00E+00	0.00E+00	0.00E+00	0.00E+00
MW-10					
	Tritium	0.00E+00	0.00E+00	0.00E+00	0.00E+00
	FE-55	0.00E+00	0.00E+00	0.00E+00	0.00E+00
	NI-63	0.00E+00	0.00E+00	0.00E+00	0.00E+00
	Sr-90	0.00E+00	0.00E+00	0.00E+00	0.00E+00
	Total Gamma	0.00E+00	0.00E+00	0.00E+00	0.00E+00
MW-11					
	Tritium	0.00E+00	0.00E+00	0.00E+00	0.00E+00
	FE-55	0.00E+00	0.00E+00	0.00E+00	0.00E+00
	NI-63	0.00E+00	0.00E+00	0.00E+00	0.00E+00
	Sr-90	0.00E+00	0.00E+00	0.00E+00	0.00E+00
	Total Gamma	0.00E+00	0.00E+00	0.00E+00	0.00E+00
MW-12A					
	Tritium		0.00E+00	0.00E+00	0.00E+00
	FE-55		0.00E+00	0.00E+00	0.00E+00
	NI-63		0.00E+00	0.00E+00	0.00E+00
	Sr-90		0.00E+00	0.00E+00	7.43E-01
	Total Gamma		0.00E+00	0.00E+00	0.00E+00

TABLE III.9

GROUNDWATER ANALYSIS RESULTS

pCi/L

JANUARY THROUGH DECEMBER 2010

	1st Quarter	2nd Quarter	3rd Quarter	4th Quarter
MW-12B				
Tritium	0.00E+00	0.00E+00	0.00E+00	0.00E+00
FE-55	0.00E+00	0.00E+00	0.00E+00	0.00E+00
NI-63	0.00E+00	0.00E+00	0.00E+00	0.00E+00
Sr-90	0.00E+00	0.00E+00	4.64E-01	0.00E+00
Total Gamma	0.00E+00	0.00E+00	0.00E+00	0.00E+00
EAST LAGOON				
Tritium	0.00E+00	0.00E+00	0.00E+00	0.00E+00
FE-55				
NI-63				
Sr-90				
Total Gamma	0.00E+00	0.00E+00	0.00E+00	0.00E+00
WEST LAGOON				
Tritium	0.00E+00	0.00E+00	0.00E+00	0.00E+00
FE-55				
NI-63				
Sr-90				
Total Gamma	0.00E+00	0.00E+00	0.00E+00	0.00E+00
NORTH STORMWATER HDR				
Tritium		0.00E+00		
FE-55				
NI-63				
Sr-90				
Total Gamma		0.00E+00		
SOUTH STORMWATER HDR				
Tritium		0.00E+00		
FE-55				
NI-63				
Sr-90				
Total Gamma		0.00E+00		

NOTE: Values reported as zero are determined to be below the Lower Limit of Detection (LLD).

SECTION IV

DOSE FROM GASEOUS EFFLUENTS

Technical Specification 5.9.4.a

GASPAR II OUTPUT

January 1, 2010 - December 31,2010

Radioactive Effluent Releases - First, Second, Third and Fourth Quarters 2010

GASEOUS EFFLUENTS

Radioactive gaseous releases for the reporting period totaled 2.02E+00 curies of inert gas. The gross gaseous activity release rates were 5.94E-02 µCi/sec for the first quarter, 6.35E-02 µCi/sec for the second quarter, 7.42E-02 µCi/sec for the third quarter, and 6.22E-02 µCi/sec for the fourth quarter.

No radioactive halogens were released during the reporting period from gaseous effluent discharges.

No radioactive particulates with half-lives greater that eight days were released during the reporting period from gaseous effluent discharges.

Radioactive tritium released during the reporting period totaled 2.5 curies.

Carbon-14 released for the reporting period totaled 2.36 curies, This is a calculated value based on reactor power and days of operation.

Off-site vendor analysis of weekly composite samples indicated that no gross alpha radioactivity was released during the reporting period.

POTENTIAL DOSES TO INDIVIDUALS AND POPULATIONS

A. Potential Annual Doses to Individuals from Gaseous Releases

Total body, skin, and organ doses from ground releases were calculated in mRem to an average adult, teenager, child, and infant using the annual configuration of the GASPAR II program. Results to each receptor are shown in Tables IV-A-1 through IV-A-39. Also, the doses to the same groups, Table IV-B-1, in units of mRad, due to gamma and beta radiation carried by air, were computed using GASPAR II. In its annual configuration, GASPAR II assumes that all release rates are entered in curies per year (Ci/yr).

The inputs to GASPAR II for the annual period from January 1, 2010 through December 31, 2010 were as follows:

(1) All gaseous effluents

(2) Entrained gases (Ar-41, Xe-131M, Xe-133M, Xe-133, Xe-135M, Xe-135, Kr-85M, Kr-87, and Kr-88) from liquid effluents.

(3) Annual X/Q at the actual receptor locations, which are corrected for open terrain and plume depletion, are calculated according to Regulatory Guide 1.111. Also included are annual deposition rates corrected for the open terrain factor.

(4) The production, intake and grazing fractions were as follows: 1.0 for leafy vegetables grown in garden of interest, 0.76 for produce grown in garden of interest, 0.5 for the pasture grazing season of the milk animal, 1.0 for pasture grazing season of the meat animal, and 8 g/m^3 for the air water (humidity) concentrations.

(5) All dose factors, transport times from receptor to individual, and usage factors are defined by Regulatory Guide 1.109 and NUREG-0172.

(6) Site specific information, within a five-mile radius of the plant, on types of receptors located in each sector was used. That is, if a cow was not present in a sector, then the milk pathway for that sector was not considered. If it was present, then the actual sector distance was used.

These inputs introduce a most conservative approach for the following reasons:

(1) The open terrain and deposition corrections increase annual X/Q by a factor ranging between 1.0 and 4.0

(2) The production, intake, and grazing fractions, as defined in the input definition statement, represent the environment in an extremely conservative manner.

B. Potential Semiannual Doses to Population from Gaseous Releases

The GASPAR II program in its annual configuration was also used to calculate the ALARA integrated population dose summary for the total body, skin, and organ doses in man-rem for all individuals within a 50-mile radius. The population-integrated dose is the summation of the dose received by all individuals and has units of man-thyroid-rem when applied to the summation of thyroid doses. The same inputs were used as in the individual case with the addition of the following:

(1) A total population of 853,274 (based on the 2000 census) was used to define the sector segments within a 50-mile radius of the plant.

(2) Production of milk, meat, and vegetation is based on 1973 annual data for Nebraska as recommended by the Nuclear Regulatory Commission for use in GASPAR II.

TABLE IV-A- 1

FORT CALHOUN ANNUAL 2010, DOSE PROJECTIONS
SPECIAL LOCATION NO. 1 RES
AT 4.36 MILES N

ANNUAL_BETA_AIR_DOSE = 5.04E-06 MILLRADS
ANNUAL_GAMMA_AIR_DOSE = 2.13E-06 MILLRADS

PATHWAY	T.BODY	GI-TRACT	BONE	LIVER	KIDNEY	THYROID	LUNG	SKIN
PLUME	1.29E-06	1.29E-06	1.29E-06	1.29E-06	1.29E-06	1.29E-06	1.34E-06	3.30E-06
GROUND	0.00E+00	0.00E+00	0.00E+00	0.00E+00	0.00E+00	0.00E+00	0.00E+00	0.00E+00
INHAL								
ADULT	7.98E-06	7.98E-06	0.00E+00	7.98E-06	7.98E-06	7.98E-06	7.98E-06	7.98E-06
TEEN	8.05E-06	8.05E-06	0.00E+00	8.05E-06	8.05E-06	8.05E-06	8.05E-06	8.05E-06
CHILD	7.11E-06	7.11E-06	0.00E+00	7.11E-06	7.11E-06	7.11E-06	7.11E-06	7.11E-06
INFANT	4.09E-06	4.09E-06	0.00E+00	4.09E-06	4.09E-06	4.09E-06	4.09E-06	4.09E-06

TABLE IV-A- 2

FORT CALHOUN ANNUAL 2010, DOSE PROJECTIONS
SPECIAL LOCATION NO. 2 RES
AT 1.93 MILES NNE

ANNUAL_BETA_AIR_DOSE = 3.70E-05 MILLRADS
ANNUAL_GAMMA_AIR_DOSE = 4.08E-05 MILLRADS

PATHWAY	T.BODY	GI-TRACT	BONE	LIVER	KIDNEY	THYROID	LUNG	SKIN
PLUME	2.65E-05	2.65E-05	2.65E-05	2.65E-05	2.65E-05	2.65E-05	2.67E-05	4.92E-05
GROUND	0.00E+00	0.00E+00	0.00E+00	0.00E+00	0.00E+00	0.00E+00	0.00E+00	0.00E+00
INHAL								
ADULT	3.93E-05	3.93E-05	0.00E+00	3.93E-05	3.93E-05	3.93E-05	3.93E-05	3.93E-05
TEEN	3.97E-05	3.97E-05	0.00E+00	3.97E-05	3.97E-05	3.97E-05	3.97E-05	3.97E-05
CHILD	3.50E-05	3.50E-05	0.00E+00	3.50E-05	3.50E-05	3.50E-05	3.50E-05	3.50E-05
INFANT	2.02E-05	2.02E-05	0.00E+00	2.02E-05	2.02E-05	2.02E-05	2.02E-05	2.02E-05

TABLE IV-A- 3

FORT CALHOUN ANNUAL 2010, DOSE PROJECTIONS
SPECIAL LOCATION NO. 3 RES
AT 1.52 MILES NE

ANNUAL_BETA_AIR_DOSE = 5.95E-05 MILLRADS
ANNUAL_GAMMA_AIR_DOSE = 4.98E-05 MILLRADS

PATHWAY	T.BODY	GI-TRACT	BONE	LIVER	KIDNEY	THYROID	LUNG	SKIN
PLUME	3.19E-05	3.19E-05	3.19E-05	3.19E-05	3.19E-05	3.19E-05	3.24E-05	6.36E-05
GROUND	0.00E+00	0.00E+00	0.00E+00	0.00E+00	0.00E+00	0.00E+00	0.00E+00	0.00E+00
INHAL								
ADULT	7.41E-05	7.41E-05	0.00E+00	7.41E-05	7.41E-05	7.41E-05	7.41E-05	7.41E-05
TEEN	7.47E-05	7.47E-05	0.00E+00	7.47E-05	7.47E-05	7.47E-05	7.47E-05	7.47E-05
CHILD	6.60E-05	6.60E-05	0.00E+00	6.60E-05	6.60E-05	6.60E-05	6.60E-05	6.60E-05
INFANT	3.80E-05	3.80E-05	0.00E+00	3.80E-05	3.80E-05	3.80E-05	3.80E-05	3.80E-05

TABLE IV-A- 4

FORT CALHOUN ANNUAL 2010, DOSE PROJECTIONS
SPECIAL LOCATION NO. 4 RES
AT 4.79 MILES ENE

ANNUAL_BETA_AIR_DOSE = 4.26E-06 MILLRADS
ANNUAL_GAMMA_AIR_DOSE = 1.49E-06 MILLRADS

PATHWAY	T.BODY	GI-TRACT	BONE	LIVER	KIDNEY	THYROID	LUNG	SKIN
PLUME	8.78E-07	8.78E-07	8.78E-07	8.78E-07	8.78E-07	8.78E-07	9.20E-07	2.46E-06
GROUND	0.00E+00	0.00E+00	0.00E+00	0.00E+00	0.00E+00	0.00E+00	0.00E+00	0.00E+00
INHAL								
ADULT	7.41E-06	7.41E-06	0.00E+00	7.41E-06	7.41E-06	7.41E-06	7.41E-06	7.41E-06
TEEN	7.47E-06	7.47E-06	0.00E+00	7.47E-06	7.47E-06	7.47E-06	7.47E-06	7.47E-06
CHILD	6.60E-06	6.60E-06	0.00E+00	6.60E-06	6.60E-06	6.60E-06	6.60E-06	6.60E-06
INFANT	3.80E-06	3.80E-06	0.00E+00	3.80E-06	3.80E-06	3.80E-06	3.80E-06	3.80E-06

TABLE IV-A- 5

FORT CALHOUN ANNUAL 2010, DOSE PROJECTIONS
SPECIAL LOCATION NO. 5 RES
AT 4.67 MILES E

ANNUAL_BETA_AIR_DOSE = 6.69E-06 MILLRADS
ANNUAL_GAMMA_AIR_DOSE = 2.64E-06 MILLRADS

PATHWAY	T.BODY	GI-TRACT	BONE	LIVER	KIDNEY	THYROID	LUNG	SKIN
PLUME	1.58E-06	1.58E-06	1.58E-06	1.58E-06	1.58E-06	1.58E-06	1.65E-06	4.19E-06
GROUND	0.00E+00	0.00E+00	0.00E+00	0.00E+00	0.00E+00	0.00E+00	0.00E+00	0.00E+00
INHAL								
ADULT	1.08E-05	1.08E-05	0.00E+00	1.08E-05	1.08E-05	1.08E-05	1.08E-05	1.08E-05
TEEN	1.09E-05	1.09E-05	0.00E+00	1.09E-05	1.09E-05	1.09E-05	1.09E-05	1.09E-05
CHILD	9.65E-06	9.65E-06	0.00E+00	9.65E-06	9.65E-06	9.65E-06	9.65E-06	9.65E-06
INFANT	5.55E-06	5.55E-06	0.00E+00	5.55E-06	5.55E-06	5.55E-06	5.55E-06	5.55E-06

TABLE IV-A- 6

FORT CALHOUN ANNUAL 2010, DOSE PROJECTIONS
SPECIAL LOCATION NO. 6 RES
AT 4.22 MILES ESE

ANNUAL_BETA_AIR_DOSE = 7.52E-06 MILLRADS
ANNUAL_GAMMA_AIR_DOSE = 4.35E-06 MILLRADS

PATHWAY	T.BODY	GI-TRACT	BONE	LIVER	KIDNEY	THYROID	LUNG	SKIN
PLUME	2.71E-06	2.71E-06	2.71E-06	2.71E-06	2.71E-06	2.71E-06	2.78E-06	6.11E-06
GROUND	0.00E+00	0.00E+00	0.00E+00	0.00E+00	0.00E+00	0.00E+00	0.00E+00	0.00E+00
INHAL								
ADULT	1.08E-05	1.08E-05	0.00E+00	1.08E-05	1.08E-05	1.08E-05	1.08E-05	1.08E-05
TEEN	1.09E-05	1.09E-05	0.00E+00	1.09E-05	1.09E-05	1.09E-05	1.09E-05	1.09E-05
CHILD	9.65E-06	9.65E-06	0.00E+00	9.65E-06	9.65E-06	9.65E-06	9.65E-06	9.65E-06
INFANT	5.55E-06	5.55E-06	0.00E+00	5.55E-06	5.55E-06	5.55E-06	5.55E-06	5.55E-06

TABLE IV-A- 7

FORT CALHOUN ANNUAL 2010, DOSE PROJECTIONS
SPECIAL LOCATION NO. 7 RES
AT 1.67 MILES SE

ANNUAL_BETA_AIR_DOSE = 1.73E-04 MILLRADS
ANNUAL_GAMMA_AIR_DOSE = 3.64E-04 MILLRADS

PATHWAY	T.BODY	GI-TRACT	BONE	LIVER	KIDNEY	THYROID	LUNG	SKIN
PLUME	2.41E-04	2.41E-04	2.41E-04	2.41E-04	2.41E-04	2.41E-04	2.41E-04	4.00E-04
GROUND	0.00E+00	0.00E+00	0.00E+00	0.00E+00	0.00E+00	0.00E+00	0.00E+00	0.00E+00
INHAL								
ADULT	7.41E-05	7.41E-05	0.00E+00	7.41E-05	7.41E-05	7.41E-05	7.41E-05	7.41E-05
TEEN	7.47E-05	7.47E-05	0.00E+00	7.47E-05	7.47E-05	7.47E-05	7.47E-05	7.47E-05
CHILD	6.60E-05	6.60E-05	0.00E+00	6.60E-05	6.60E-05	6.60E-05	6.60E-05	6.60E-05
INFANT	3.80E-05	3.80E-05	0.00E+00	3.80E-05	3.80E-05	3.80E-05	3.80E-05	3.80E-05

TABLE IV-A- 8

FORT CALHOUN ANNUAL 2010, DOSE PROJECTIONS
SPECIAL LOCATION NO. 8 RES
AT 0.65 MILES SSE

ANNUAL_BETA_AIR_DOSE = 1.33E-03 MILLRADS
ANNUAL_GAMMA_AIR_DOSE = 2.80E-03 MILLRADS

PATHWAY	T.BODY	GI-TRACT	BONE	LIVER	KIDNEY	THYROID	LUNG	SKIN
PLUME	1.85E-03	1.85E-03	1.85E-03	1.85E-03	1.85E-03	1.85E-03	1.86E-03	3.08E-03
GROUND	0.00E+00	0.00E+00	0.00E+00	0.00E+00	0.00E+00	0.00E+00	0.00E+00	0.00E+00
INHAL								
ADULT	5.70E-04	5.70E-04	0.00E+00	5.70E-04	5.70E-04	5.70E-04	5.70E-04	5.70E-04
TEEN	5.75E-04	5.75E-04	0.00E+00	5.75E-04	5.75E-04	5.75E-04	5.75E-04	5.75E-04
CHILD	5.08E-04	5.08E-04	0.00E+00	5.08E-04	5.08E-04	5.08E-04	5.08E-04	5.08E-04
INFANT	2.92E-04	2.92E-04	0.00E+00	2.92E-04	2.92E-04	2.92E-04	2.92E-04	2.92E-04

TABLE IV-A- 9

FORT CALHOUN ANNUAL 2010, DOSE PROJECTIONS
SPECIAL LOCATION NO. 9 RES
AT 0.73 MILES S

ANNUAL_BETA_AIR_DOSE = 3.32E-04 MILLRADS
ANNUAL_GAMMA_AIR_DOSE = 5.59E-04 MILLRADS

PATHWAY	T.BODY	GI-TRACT	BONE	LIVER	KIDNEY	THYROID	LUNG	SKIN
PLUME	3.68E-04	3.68E-04	3.68E-04	3.68E-04	3.68E-04	3.68E-04	3.70E-04	6.31E-04
GROUND	0.00E+00	0.00E+00	0.00E+00	0.00E+00	0.00E+00	0.00E+00	0.00E+00	0.00E+00
INHAL								
ADULT	2.28E-04	2.28E-04	0.00E+00	2.28E-04	2.28E-04	2.28E-04	2.28E-04	2.28E-04
TEEN	2.30E-04	2.30E-04	0.00E+00	2.30E-04	2.30E-04	2.30E-04	2.30E-04	2.30E-04
CHILD	2.03E-04	2.03E-04	0.00E+00	2.03E-04	2.03E-04	2.03E-04	2.03E-04	2.03E-04
INFANT	1.17E-04	1.17E-04	0.00E+00	1.17E-04	1.17E-04	1.17E-04	1.17E-04	1.17E-04

TABLE IV-A-10

FORT CALHOUN ANNUAL 2010, DOSE PROJECTIONS
SPECIAL LOCATION NO. 10 RES
AT 0.65 MILES SSW

ANNUAL_BETA_AIR_DOSE = 7.72E-04 MILLRADS
ANNUAL_GAMMA_AIR_DOSE = 1.62E-03 MILLRADS

PATHWAY	T.BODY	GI-TRACT	BONE	LIVER	KIDNEY	THYROID	LUNG	SKIN
PLUME	1.07E-03	1.07E-03	1.07E-03	1.07E-03	1.07E-03	1.07E-03	1.08E-03	1.78E-03
GROUND	0.00E+00	0.00E+00	0.00E+00	0.00E+00	0.00E+00	0.00E+00	0.00E+00	0.00E+00
INHAL								
ADULT	3.30E-04	3.30E-04	0.00E+00	3.30E-04	3.30E-04	3.30E-04	3.30E-04	3.30E-04
TEEN	3.33E-04	3.33E-04	0.00E+00	3.33E-04	3.33E-04	3.33E-04	3.33E-04	3.33E-04
CHILD	2.94E-04	2.94E-04	0.00E+00	2.94E-04	2.94E-04	2.94E-04	2.94E-04	2.94E-04
INFANT	1.69E-04	1.69E-04	0.00E+00	1.69E-04	1.69E-04	1.69E-04	1.69E-04	1.69E-04

TABLE IV-A-11

FORT CALHOUN ANNUAL 2010, DOSE PROJECTIONS
SPECIAL LOCATION NO. 11 RES
AT 0.73 MILES SW

ANNUAL_BETA_AIR_DOSE = 6.52E-04 MILLRADS
ANNUAL_GAMMA_AIR_DOSE = 1.37E-03 MILLRADS

PATHWAY	T.BODY	GI-TRACT	BONE	LIVER	KIDNEY	THYROID	LUNG	SKIN
PLUME	9.08E-04	9.08E-04	9.08E-04	9.08E-04	9.08E-04	9.08E-04	9.10E-04	1.51E-03
GROUND	0.00E+00	0.00E+00	0.00E+00	0.00E+00	0.00E+00	0.00E+00	0.00E+00	0.00E+00
INHAL								
ADULT	2.79E-04	2.79E-04	0.00E+00	2.79E-04	2.79E-04	2.79E-04	2.79E-04	2.79E-04
TEEN	2.82E-04	2.82E-04	0.00E+00	2.82E-04	2.82E-04	2.82E-04	2.82E-04	2.82E-04
CHILD	2.49E-04	2.49E-04	0.00E+00	2.49E-04	2.49E-04	2.49E-04	2.49E-04	2.49E-04
INFANT	1.43E-04	1.43E-04	0.00E+00	1.43E-04	1.43E-04	1.43E-04	1.43E-04	1.43E-04

TABLE IV-A-12

FORT CALHOUN ANNUAL 2010, DOSE PROJECTIONS
SPECIAL LOCATION NO. 12 RES
AT 1.06 MILES WSW

ANNUAL_BETA_AIR_DOSE = 1.55E-04 MILLRADS
ANNUAL_GAMMA_AIR_DOSE = 2.15E-04 MILLRADS

PATHWAY	T.BODY	GI-TRACT	BONE	LIVER	KIDNEY	THYROID	LUNG	SKIN
PLUME	1.40E-04	1.40E-04	1.40E-04	1.40E-04	1.40E-04	1.40E-04	1.41E-04	2.49E-04
GROUND	0.00E+00	0.00E+00	0.00E+00	0.00E+00	0.00E+00	0.00E+00	0.00E+00	0.00E+00
INHAL								
ADULT	1.37E-04	1.37E-04	0.00E+00	1.37E-04	1.37E-04	1.37E-04	1.37E-04	1.37E-04
TEEN	1.38E-04	1.38E-04	0.00E+00	1.38E-04	1.38E-04	1.38E-04	1.38E-04	1.38E-04
CHILD	1.22E-04	1.22E-04	0.00E+00	1.22E-04	1.22E-04	1.22E-04	1.22E-04	1.22E-04
INFANT	7.01E-05	7.01E-05	0.00E+00	7.01E-05	7.01E-05	7.01E-05	7.01E-05	7.01E-05

TABLE IV-A-13

FORT CALHOUN ANNUAL 2010, DOSE PROJECTIONS
SPECIAL LOCATION NO. 13 RES
AT 1.20 MILES W

ANNUAL_BETA_AIR_DOSE = 2.00E-04 MILLRADS
ANNUAL_GAMMA_AIR_DOSE = 4.20E-04 MILLRADS

PATHWAY	T.BODY	GI-TRACT	BONE	LIVER	KIDNEY	THYROID	LUNG	SKIN
PLUME	2.78E-04	2.78E-04	2.78E-04	2.78E-04	2.78E-04	2.78E-04	2.79E-04	4.61E-04
GROUND	0.00E+00	0.00E+00	0.00E+00	0.00E+00	0.00E+00	0.00E+00	0.00E+00	0.00E+00
INHAL								
ADULT	8.55E-05	8.55E-05	0.00E+00	8.55E-05	8.55E-05	8.55E-05	8.55E-05	8.55E-05
TEEN	8.62E-05	8.62E-05	0.00E+00	8.62E-05	8.62E-05	8.62E-05	8.62E-05	8.62E-05
CHILD	7.62E-05	7.62E-05	0.00E+00	7.62E-05	7.62E-05	7.62E-05	7.62E-05	7.62E-05
INFANT	4.38E-05	4.38E-05	0.00E+00	4.38E-05	4.38E-05	4.38E-05	4.38E-05	4.38E-05

TABLE IV-A-14

FORT CALHOUN ANNUAL 2010, DOSE PROJECTIONS
SPECIAL LOCATION NO. 14 RES
AT 2.27 MILES WNW

ANNUAL_BETA_AIR_DOSE = 4.27E-05 MILLRADS
ANNUAL_GAMMA_AIR_DOSE = 7.52E-05 MILLRADS

PATHWAY	T.BODY	GI-TRACT	BONE	LIVER	KIDNEY	THYROID	LUNG	SKIN
PLUME	4.96E-05	4.96E-05	4.96E-05	4.96E-05	4.96E-05	4.96E-05	4.98E-05	8.44E-05
GROUND	0.00E+00	0.00E+00	0.00E+00	0.00E+00	0.00E+00	0.00E+00	0.00E+00	0.00E+00
INHAL								
ADULT	2.73E-05	2.73E-05	0.00E+00	2.73E-05	2.73E-05	2.73E-05	2.73E-05	2.73E-05
TEEN	2.76E-05	2.76E-05	0.00E+00	2.76E-05	2.76E-05	2.76E-05	2.76E-05	2.76E-05
CHILD	2.44E-05	2.44E-05	0.00E+00	2.44E-05	2.44E-05	2.44E-05	2.44E-05	2.44E-05
INFANT	1.40E-05	1.40E-05	0.00E+00	1.40E-05	1.40E-05	1.40E-05	1.40E-05	1.40E-05

TABLE IV-A-15

FORT CALHOUN ANNUAL 2010, DOSE PROJECTIONS
SPECIAL LOCATION NO. 15 RES
AT 2.40 MILES NW

ANNUAL_BETA_AIR_DOSE = 4.69E-05 MILLRADS
ANNUAL_GAMMA_AIR_DOSE = 7.33E-05 MILLRADS

PATHWAY	T.BODY	GI-TRACT	BONE	LIVER	KIDNEY	THYROID	LUNG	SKIN
PLUME	4.82E-05	4.82E-05	4.82E-05	4.82E-05	4.82E-05	4.82E-05	4.84E-05	8.36E-05
GROUND	0.00E+00	0.00E+00	0.00E+00	0.00E+00	0.00E+00	0.00E+00	0.00E+00	0.00E+00
INHAL								
ADULT	3.59E-05	3.59E-05	0.00E+00	3.59E-05	3.59E-05	3.59E-05	3.59E-05	3.59E-05
TEEN	3.62E-05	3.62E-05	0.00E+00	3.62E-05	3.62E-05	3.62E-05	3.62E-05	3.62E-05
CHILD	3.20E-05	3.20E-05	0.00E+00	3.20E-05	3.20E-05	3.20E-05	3.20E-05	3.20E-05
INFANT	1.84E-05	1.84E-05	0.00E+00	1.84E-05	1.84E-05	1.84E-05	1.84E-05	1.84E-05

TABLE IV-A-16

FORT CALHOUN ANNUAL 2010, DOSE PROJECTIONS
SPECIAL LOCATION NO. 16 RES
AT 2.08 MILES NNW

ANNUAL_BETA_AIR_DOSE = 4.86E-05 MILLRADS
ANNUAL_GAMMA_AIR_DOSE = 6.81E-05 MILLRADS

PATHWAY	T.BODY	GI-TRACT	BONE	LIVER	KIDNEY	THYROID	LUNG	SKIN
PLUME	4.46E-05	4.46E-05	4.46E-05	4.46E-05	4.46E-05	4.46E-05	4.49E-05	7.89E-05
GROUND	0.00E+00	0.00E+00	0.00E+00	0.00E+00	0.00E+00	0.00E+00	0.00E+00	0.00E+00
INHAL								
ADULT	4.22E-05	4.22E-05	0.00E+00	4.22E-05	4.22E-05	4.22E-05	4.22E-05	4.22E-05
TEEN	4.25E-05	4.25E-05	0.00E+00	4.25E-05	4.25E-05	4.25E-05	4.25E-05	4.25E-05
CHILD	3.76E-05	3.76E-05	0.00E+00	3.76E-05	3.76E-05	3.76E-05	3.76E-05	3.76E-05
INFANT	2.16E-05	2.16E-05	0.00E+00	2.16E-05	2.16E-05	2.16E-05	2.16E-05	2.16E-05

TABLE IV-A-17

FORT CALHOUN ANNUAL 2010, DOSE PROJECTIONS
SPECIAL LOCATION NO. 17 VEG
AT 1.59 MILES NE

ANNUAL_BETA_AIR_DOSE = 5.27E-05 MILLRADS
ANNUAL_GAMMA_AIR_DOSE = 4.03E-05 MILLRADS

PATHWAY	T.BODY	GI-TRACT	BONE	LIVER	KIDNEY	THYROID	LUNG	SKIN
PLUME	2.57E-05	2.57E-05	2.57E-05	2.57E-05	2.57E-05	2.57E-05	2.61E-05	5.25E-05
GROUND	0.00E+00	0.00E+00	0.00E+00	0.00E+00	0.00E+00	0.00E+00	0.00E+00	0.00E+00
VEGET								
ADULT	2.56E-03	2.56E-03	1.22E-02	2.56E-03	2.56E-03	2.56E-03	2.56E-03	2.56E-03
TEEN	4.09E-03	4.09E-03	1.98E-02	4.09E-03	4.09E-03	4.09E-03	4.09E-03	4.09E-03
CHILD	9.74E-03	9.74E-03	4.76E-02	9.74E-03	9.74E-03	9.74E-03	9.74E-03	9.74E-03

TABLE IV-A-18

FORT CALHOUN ANNUAL 2010, DOSE PROJECTIONS
SPECIAL LOCATION NO. 18 VEG
AT 4.79 MILES ENE

ANNUAL_BETA_AIR_DOSE = 4.26E-06 MILLRADS
ANNUAL_GAMMA_AIR_DOSE = 1.49E-06 MILLRADS

PATHWAY	T.BODY	GI-TRACT	BONE	LIVER	KIDNEY	THYROID	LUNG	SKIN
PLUME	8.78E-07	8.78E-07	8.78E-07	8.78E-07	8.78E-07	8.78E-07	9.20E-07	2.46E-06
GROUND	0.00E+00	0.00E+00	0.00E+00	0.00E+00	0.00E+00	0.00E+00	0.00E+00	0.00E+00
VEGET								
ADULT	2.77E-04	2.77E-04	1.32E-03	2.77E-04	2.77E-04	2.77E-04	2.77E-04	2.77E-04
TEEN	4.43E-04	4.43E-04	2.14E-03	4.43E-04	4.43E-04	4.43E-04	4.43E-04	4.43E-04
CHILD	1.06E-03	1.06E-03	5.16E-03	1.06E-03	1.06E-03	1.06E-03	1.06E-03	1.06E-03

TABLE IV-A-19

FORT CALHOUN ANNUAL 2010, DOSE PROJECTIONS
SPECIAL LOCATION NO. 19 VEG
AT 1.74 MILES SE

ANNUAL_BETA_AIR_DOSE = 1.60E-04 MILLRADS
ANNUAL_GAMMA_AIR_DOSE = 3.36E-04 MILLRADS

PATHWAY	T.BODY	GI-TRACT	BONE	LIVER	KIDNEY	THYROID	LUNG	SKIN
PLUME	2.22E-04	2.22E-04	2.22E-04	2.22E-04	2.22E-04	2.22E-04	2.23E-04	3.69E-04
GROUND	0.00E+00	0.00E+00	0.00E+00	0.00E+00	0.00E+00	0.00E+00	0.00E+00	0.00E+00
VEGET								
ADULT	2.56E-03	2.56E-03	1.22E-02	2.56E-03	2.56E-03	2.56E-03	2.56E-03	2.56E-03
TEEN	4.09E-03	4.09E-03	1.98E-02	4.09E-03	4.09E-03	4.09E-03	4.09E-03	4.09E-03
CHILD	9.74E-03	9.74E-03	4.76E-02	9.74E-03	9.74E-03	9.74E-03	9.74E-03	9.74E-03

TABLE IV-A-20

FORT CALHOUN ANNUAL 2010, DOSE PROJECTIONS
SPECIAL LOCATION NO. 20 VEG
AT 0.94 MILES SSE

ANNUAL_BETA_AIR_DOSE = 4.03E-04 MILLRADS
ANNUAL_GAMMA_AIR_DOSE = 7.03E-04 MILLRADS

PATHWAY	T.BODY	GI-TRACT	BONE	LIVER	KIDNEY	THYROID	LUNG	SKIN
PLUME	4.63E-04	4.63E-04	4.63E-04	4.63E-04	4.63E-04	4.63E-04	4.65E-04	7.90E-04
GROUND	0.00E+00	0.00E+00	0.00E+00	0.00E+00	0.00E+00	0.00E+00	0.00E+00	0.00E+00
VEGET								
ADULT	9.82E-03	9.82E-03	4.67E-02	9.82E-03	9.82E-03	9.82E-03	9.82E-03	9.82E-03
TEEN	1.57E-02	1.57E-02	7.57E-02	1.57E-02	1.57E-02	1.57E-02	1.57E-02	1.57E-02
CHILD	3.73E-02	3.73E-02	1.83E-01	3.73E-02	3.73E-02	3.73E-02	3.73E-02	3.73E-02

TABLE IV-A-21

FORT CALHOUN ANNUAL 2010, DOSE PROJECTIONS
SPECIAL LOCATION NO. 21 VEG
AT 2.60 MILES S

ANNUAL_BETA_AIR_DOSE = 2.26E-05 MILLRADS
ANNUAL_GAMMA_AIR_DOSE = 4.76E-05 MILLRADS

PATHWAY	T.BODY	GI-TRACT	BONE	LIVER	KIDNEY	THYROID	LUNG	SKIN
PLUME	3.15E-05	3.15E-05	3.15E-05	3.15E-05	3.15E-05	3.15E-05	3.16E-05	5.23E-05
GROUND	0.00E+00	0.00E+00	0.00E+00	0.00E+00	0.00E+00	0.00E+00	0.00E+00	0.00E+00
VEGET								
ADULT	3.63E-04	3.63E-04	1.73E-03	3.63E-04	3.63E-04	3.63E-04	3.63E-04	3.63E-04
TEEN	5.80E-04	5.80E-04	2.80E-03	5.80E-04	5.80E-04	5.80E-04	5.80E-04	5.80E-04
CHILD	1.38E-03	1.38E-03	6.75E-03	1.38E-03	1.38E-03	1.38E-03	1.38E-03	1.38E-03

TABLE IV-A-22

FORT CALHOUN ANNUAL 2010, DOSE PROJECTIONS
SPECIAL LOCATION NO. 22 VEG
AT 0.65 MILES SSW

ANNUAL_BETA_AIR_DOSE = 7.72E-04 MILLRADS
ANNUAL_GAMMA_AIR_DOSE = 1.62E-03 MILLRADS

PATHWAY	T.BODY	GI-TRACT	BONE	LIVER	KIDNEY	THYROID	LUNG	SKIN
PLUME	1.07E-03	1.07E-03	1.07E-03	1.07E-03	1.07E-03	1.07E-03	1.08E-03	1.78E-03
GROUND	0.00E+00	0.00E+00	0.00E+00	0.00E+00	0.00E+00	0.00E+00	0.00E+00	0.00E+00
VEGET								
ADULT	1.24E-02	1.24E-02	5.89E-02	1.24E-02	1.24E-02	1.24E-02	1.24E-02	1.24E-02
TEEN	1.98E-02	1.98E-02	9.55E-02	1.98E-02	1.98E-02	1.98E-02	1.98E-02	1.98E-02
CHILD	4.71E-02	4.71E-02	2.30E-01	4.71E-02	4.71E-02	4.71E-02	4.71E-02	4.71E-02

TABLE IV-A-23

FORT CALHOUN ANNUAL 2010, DOSE PROJECTIONS
SPECIAL LOCATION NO. 23 VEG
AT 0.73 MILES SW

ANNUAL_BETA_AIR_DOSE = 6.52E-04 MILLRADS
ANNUAL_GAMMA_AIR_DOSE = 1.37E-03 MILLRADS

PATHWAY	T.BODY	GI-TRACT	BONE	LIVER	KIDNEY	THYROID	LUNG	SKIN
PLUME	9.08E-04	9.08E-04	9.08E-04	9.08E-04	9.08E-04	9.08E-04	9.10E-04	1.51E-03
GROUND	0.00E+00	0.00E+00	0.00E+00	0.00E+00	0.00E+00	0.00E+00	0.00E+00	0.00E+00
VEGET								
ADULT	1.05E-02	1.05E-02	4.98E-02	1.05E-02	1.05E-02	1.05E-02	1.05E-02	1.05E-02
TEEN	1.67E-02	1.67E-02	8.07E-02	1.67E-02	1.67E-02	1.67E-02	1.67E-02	1.67E-02
CHILD	3.98E-02	3.98E-02	1.94E-01	3.98E-02	3.98E-02	3.98E-02	3.98E-02	3.98E-02

TABLE IV-A-24

FORT CALHOUN ANNUAL 2010, DOSE PROJECTIONS
SPECIAL LOCATION NO. 24 VEG
AT 1.21 MILES WSW

ANNUAL_BETA_AIR_DOSE = 2.13E-04 MILLRADS
ANNUAL_GAMMA_AIR_DOSE = 4.48E-04 MILLRADS

PATHWAY	T.BODY	GI-TRACT	BONE	LIVER	KIDNEY	THYROID	LUNG	SKIN
PLUME	2.96E-04	2.96E-04	2.96E-04	2.96E-04	2.96E-04	2.96E-04	2.97E-04	4.92E-04
GROUND	0.00E+00	0.00E+00	0.00E+00	0.00E+00	0.00E+00	0.00E+00	0.00E+00	0.00E+00
VEGET								
ADULT	3.41E-03	3.41E-03	1.62E-02	3.41E-03	3.41E-03	3.41E-03	3.41E-03	3.41E-03
TEEN	5.46E-03	5.46E-03	2.63E-02	5.46E-03	5.46E-03	5.46E-03	5.46E-03	5.46E-03
CHILD	1.30E-02	1.30E-02	6.35E-02	1.30E-02	1.30E-02	1.30E-02	1.30E-02	1.30E-02

TABLE IV-A-25

FORT CALHOUN ANNUAL 2010, DOSE PROJECTIONS
SPECIAL LOCATION NO. 25 VEG
AT 1.30 MILES W

ANNUAL_BETA_AIR_DOSE = 1.60E-04 MILLRADS
ANNUAL_GAMMA_AIR_DOSE = 3.36E-04 MILLRADS

PATHWAY	T.BODY	GI-TRACT	BONE	LIVER	KIDNEY	THYROID	LUNG	SKIN
PLUME	2.22E-04	2.22E-04	2.22E-04	2.22E-04	2.22E-04	2.22E-04	2.23E-04	3.69E-04
GROUND	0.00E+00	0.00E+00	0.00E+00	0.00E+00	0.00E+00	0.00E+00	0.00E+00	0.00E+00
VEGET								
ADULT	2.56E-03	2.56E-03	1.22E-02	2.56E-03	2.56E-03	2.56E-03	2.56E-03	2.56E-03
TEEN	4.09E-03	4.09E-03	1.98E-02	4.09E-03	4.09E-03	4.09E-03	4.09E-03	4.09E-03
CHILD	9.74E-03	9.74E-03	4.76E-02	9.74E-03	9.74E-03	9.74E-03	9.74E-03	9.74E-03

TABLE IV-A-26

FORT CALHOUN ANNUAL 2010, DOSE PROJECTIONS
SPECIAL LOCATION NO. 26 VEG
AT 2.27 MILES WNW

ANNUAL_BETA_AIR_DOSE = 4.27E-05 MILLRADS
ANNUAL_GAMMA_AIR_DOSE = 7.52E-05 MILLRADS

PATHWAY	T.BODY	GI-TRACT	BONE	LIVER	KIDNEY	THYROID	LUNG	SKIN
PLUME	4.96E-05	4.96E-05	4.96E-05	4.96E-05	4.96E-05	4.96E-05	4.98E-05	8.44E-05
GROUND	0.00E+00	0.00E+00	0.00E+00	0.00E+00	0.00E+00	0.00E+00	0.00E+00	0.00E+00
VEGET								
ADULT	1.02E-03	1.02E-03	4.87E-03	1.02E-03	1.02E-03	1.02E-03	1.02E-03	1.02E-03
TEEN	1.64E-03	1.64E-03	7.90E-03	1.64E-03	1.64E-03	1.64E-03	1.64E-03	1.64E-03
CHILD	3.90E-03	3.90E-03	1.90E-02	3.90E-03	3.90E-03	3.90E-03	3.90E-03	3.90E-03

TABLE IV-A-27

FORT CALHOUN ANNUAL 2010, DOSE PROJECTIONS
SPECIAL LOCATION NO. 27 VEG
AT 2.40 MILES NW

ANNUAL_BETA_AIR_DOSE = 4.69E-05 MILLRADS
ANNUAL_GAMMA_AIR_DOSE = 7.33E-05 MILLRADS

PATHWAY	T.BODY	GI-TRACT	BONE	LIVER	KIDNEY	THYROID	LUNG	SKIN
PLUME	4.82E-05	4.82E-05	4.82E-05	4.82E-05	4.82E-05	4.82E-05	4.84E-05	8.36E-05
GROUND	0.00E+00	0.00E+00	0.00E+00	0.00E+00	0.00E+00	0.00E+00	0.00E+00	0.00E+00
VEGET								
ADULT	1.34E-03	1.34E-03	6.40E-03	1.34E-03	1.34E-03	1.34E-03	1.34E-03	1.34E-03
TEEN	2.15E-03	2.15E-03	1.04E-02	2.15E-03	2.15E-03	2.15E-03	2.15E-03	2.15E-03
CHILD	5.12E-03	5.12E-03	2.50E-02	5.12E-03	5.12E-03	5.12E-03	5.12E-03	5.12E-03

TABLE IV-A-28

FORT CALHOUN ANNUAL 2010, DOSE PROJECTIONS
SPECIAL LOCATION NO. 28 VEG
AT 2.08 MILES NNW

ANNUAL_BETA_AIR_DOSE = 4.86E-05 MILLRADS
ANNUAL_GAMMA_AIR_DOSE = 6.81E-05 MILLRADS

PATHWAY	T.BODY	GI-TRACT	BONE	LIVER	KIDNEY	THYROID	LUNG	SKIN
PLUME	4.46E-05	4.46E-05	4.46E-05	4.46E-05	4.46E-05	4.46E-05	4.49E-05	7.89E-05
GROUND	0.00E+00	0.00E+00	0.00E+00	0.00E+00	0.00E+00	0.00E+00	0.00E+00	0.00E+00
VEGET								
ADULT	1.58E-03	1.58E-03	7.51E-03	1.58E-03	1.58E-03	1.58E-03	1.58E-03	1.58E-03
TEEN	2.52E-03	2.52E-03	1.22E-02	2.52E-03	2.52E-03	2.52E-03	2.52E-03	2.52E-03
CHILD	6.01E-03	6.01E-03	2.94E-02	6.01E-03	6.01E-03	6.01E-03	6.01E-03	6.01E-03

TABLE IV-A-29

FORT CALHOUN ANNUAL 2010, DOSE PROJECTIONS
SPECIAL LOCATION NO. 29 BEEF
AT 4.91 MILES E

ANNUAL_BETA_AIR_DOSE = 6.27E-06 MILLRADS
ANNUAL_GAMMA_AIR_DOSE = 2.40E-06 MILLRADS

PATHWAY	T.BODY	GI-TRACT	BONE	LIVER	KIDNEY	THYROID	LUNG	SKIN
PLUME	1.43E-06	1.43E-06	1.43E-06	1.43E-06	1.43E-06	1.43E-06	1.49E-06	3.85E-06
GROUND	0.00E+00	0.00E+00	0.00E+00	0.00E+00	0.00E+00	0.00E+00	0.00E+00	0.00E+00
MEAT								
ADULT	1.38E-04	1.38E-04	6.79E-04	1.38E-04	1.38E-04	1.38E-04	1.38E-04	1.38E-04
TEEN	1.16E-04	1.16E-04	5.73E-04	1.16E-04	1.16E-04	1.16E-04	1.16E-04	1.16E-04
CHILD	2.17E-04	2.17E-04	1.08E-03	2.17E-04	2.17E-04	2.17E-04	2.17E-04	2.17E-04

TABLE IV-A-30

FORT CALHOUN ANNUAL 2010, DOSE PROJECTIONS
SPECIAL LOCATION NO. 30 BEEF
AT 2.60 MILES S

ANNUAL_BETA_AIR_DOSE = 2.26E-05 MILLRADS
ANNUAL_GAMMA_AIR_DOSE = 4.76E-05 MILLRADS

PATHWAY	T.BODY	GI-TRACT	BONE	LIVER	KIDNEY	THYROID	LUNG	SKIN
PLUME	3.15E-05	3.15E-05	3.15E-05	3.15E-05	3.15E-05	3.15E-05	3.16E-05	5.23E-05
GROUND	0.00E+00	0.00E+00	0.00E+00	0.00E+00	0.00E+00	0.00E+00	0.00E+00	0.00E+00
MEAT								
ADULT	1.31E-04	1.31E-04	6.41E-04	1.31E-04	1.31E-04	1.31E-04	1.31E-04	1.31E-04
TEEN	1.10E-04	1.10E-04	5.41E-04	1.10E-04	1.10E-04	1.10E-04	1.10E-04	1.10E-04
CHILD	2.05E-04	2.05E-04	1.02E-03	2.05E-04	2.05E-04	2.05E-04	2.05E-04	2.05E-04

TABLE IV-A-31

FORT CALHOUN ANNUAL 2010, DOSE PROJECTIONS
SPECIAL LOCATION NO. 31 BEEF
AT 0.65 MILES SSW

ANNUAL_BETA_AIR_DOSE = 7.72E-04 MILLRADS
ANNUAL_GAMMA_AIR_DOSE = 1.62E-03 MILLRADS

PATHWAY	T.BODY	GI-TRACT	BONE	LIVER	KIDNEY	THYROID	LUNG	SKIN
PLUME	1.07E-03	1.07E-03	1.07E-03	1.07E-03	1.07E-03	1.07E-03	1.08E-03	1.78E-03
GROUND	0.00E+00	0.00E+00	0.00E+00	0.00E+00	0.00E+00	0.00E+00	0.00E+00	0.00E+00
MEAT								
ADULT	4.46E-03	4.46E-03	2.19E-02	4.46E-03	4.46E-03	4.46E-03	4.46E-03	4.46E-03
TEEN	3.75E-03	3.75E-03	1.85E-02	3.75E-03	3.75E-03	3.75E-03	3.75E-03	3.75E-03
CHILD	7.01E-03	7.01E-03	3.47E-02	7.01E-03	7.01E-03	7.01E-03	7.01E-03	7.01E-03

TABLE IV-A-32

FORT CALHOUN ANNUAL 2010, DOSE PROJECTIONS
SPECIAL LOCATION NO. 32 BEEF
AT 0.73 MILES SW

ANNUAL_BETA_AIR_DOSE = 6.52E-04 MILLRADS
ANNUAL_GAMMA_AIR_DOSE = 1.37E-03 MILLRADS

PATHWAY	T.BODY	GI-TRACT	BONE	LIVER	KIDNEY	THYROID	LUNG	SKIN
PLUME	9.08E-04	9.08E-04	9.08E-04	9.08E-04	9.08E-04	9.08E-04	9.10E-04	1.51E-03
GROUND	0.00E+00	0.00E+00	0.00E+00	0.00E+00	0.00E+00	0.00E+00	0.00E+00	0.00E+00
MEAT								
ADULT	3.77E-03	3.77E-03	1.85E-02	3.77E-03	3.77E-03	3.77E-03	3.77E-03	3.77E-03
TEEN	3.16E-03	3.16E-03	1.56E-02	3.16E-03	3.16E-03	3.16E-03	3.16E-03	3.16E-03
CHILD	5.92E-03	5.92E-03	2.93E-02	5.92E-03	5.92E-03	5.92E-03	5.92E-03	5.92E-03

TABLE IV-A-33

FORT CALHOUN ANNUAL 2010, DOSE PROJECTIONS
SPECIAL LOCATION NO. 33 BEEF
AT 2.42 MILES WSW

ANNUAL_BETA_AIR_DOSE = 1.56E-05 MILLRADS
ANNUAL_GAMMA_AIR_DOSE = 1.57E-05 MILLRADS

PATHWAY	T.BODY	GI-TRACT	BONE	LIVER	KIDNEY	THYROID	LUNG	SKIN
PLUME	1.01E-05	1.01E-05	1.01E-05	1.01E-05	1.01E-05	1.01E-05	1.02E-05	1.93E-05
GROUND	0.00E+00	0.00E+00	0.00E+00	0.00E+00	0.00E+00	0.00E+00	0.00E+00	0.00E+00
MEAT								
ADULT	2.38E-04	2.38E-04	1.17E-03	2.38E-04	2.38E-04	2.38E-04	2.38E-04	2.38E-04
TEEN	2.00E-04	2.00E-04	9.87E-04	2.00E-04	2.00E-04	2.00E-04	2.00E-04	2.00E-04
CHILD	3.75E-04	3.75E-04	1.86E-03	3.75E-04	3.75E-04	3.75E-04	3.75E-04	3.75E-04

TABLE IV-A-34

FORT CALHOUN ANNUAL 2010, DOSE PROJECTIONS
SPECIAL LOCATION NO. 34 BEEF
AT 3.25 MILES W

ANNUAL_BETA_AIR_DOSE = 7.42E-06 MILLRADS
ANNUAL_GAMMA_AIR_DOSE = 7.22E-06 MILLRADS

PATHWAY	T.BODY	GI-TRACT	BONE	LIVER	KIDNEY	THYROID	LUNG	SKIN
PLUME	4.66E-06	4.66E-06	4.66E-06	4.66E-06	4.66E-06	4.66E-06	4.71E-06	8.92E-06
GROUND	0.00E+00	0.00E+00	0.00E+00	0.00E+00	0.00E+00	0.00E+00	0.00E+00	0.00E+00
MEAT								
ADULT	1.15E-04	1.15E-04	5.66E-04	1.15E-04	1.15E-04	1.15E-04	1.15E-04	1.15E-04
TEEN	9.69E-05	9.69E-05	4.78E-04	9.69E-05	9.69E-05	9.69E-05	9.69E-05	9.69E-05
CHILD	1.81E-04	1.81E-04	8.98E-04	1.81E-04	1.81E-04	1.81E-04	1.81E-04	1.81E-04

TABLE IV-A-35

FORT CALHOUN ANNUAL 2010, DOSE PROJECTIONS
SPECIAL LOCATION NO. 35 BEEF
AT 2.27 MILES WNW

ANNUAL_BETA_AIR_DOSE = 4.27E-05 MILLRADS
ANNUAL_GAMMA_AIR_DOSE = 7.52E-05 MILLRADS

PATHWAY	T.BODY	GI-TRACT	BONE	LIVER	KIDNEY	THYROID	LUNG	SKIN
PLUME	4.96E-05	4.96E-05	4.96E-05	4.96E-05	4.96E-05	4.96E-05	4.98E-05	8.44E-05
GROUND	0.00E+00	0.00E+00	0.00E+00	0.00E+00	0.00E+00	0.00E+00	0.00E+00	0.00E+00
MEAT								
ADULT	3.69E-04	3.69E-04	1.81E-03	3.69E-04	3.69E-04	3.69E-04	3.69E-04	3.69E-04
TEEN	3.10E-04	3.10E-04	1.53E-03	3.10E-04	3.10E-04	3.10E-04	3.10E-04	3.10E-04
CHILD	5.80E-04	5.80E-04	2.87E-03	5.80E-04	5.80E-04	5.80E-04	5.80E-04	5.80E-04

TABLE IV-A-36

FORT CALHOUN ANNUAL 2010, DOSE PROJECTIONS
SPECIAL LOCATION NO. 36 COW
AT 3.44 MILES S

ANNUAL_BETA_AIR_DOSE = 7.43E-06 MILLRADS
ANNUAL_GAMMA_AIR_DOSE = 1.18E-05 MILLRADS

PATHWAY	T.BODY	GI-TRACT	BONE	LIVER	KIDNEY	THYROID	LUNG	SKIN
PLUME	7.73E-06	7.73E-06	7.73E-06	7.73E-06	7.73E-06	7.73E-06	7.77E-06	1.34E-05
GROUND	0.00E+00	0.00E+00	0.00E+00	0.00E+00	0.00E+00	0.00E+00	0.00E+00	0.00E+00
COW MILK								
ADULT	8.40E-05	8.40E-05	4.03E-04	8.40E-05	8.40E-05	8.40E-05	8.40E-05	8.40E-05
TEEN	1.53E-04	1.53E-04	7.43E-04	1.53E-04	1.53E-04	1.53E-04	1.53E-04	1.53E-04
CHILD	3.73E-04	3.73E-04	1.83E-03	3.73E-04	3.73E-04	3.73E-04	3.73E-04	3.73E-04
INFANT	7.75E-04	7.75E-04	3.58E-03	7.75E-04	7.75E-04	7.75E-04	7.75E-04	7.75E-04

TABLE IV-A-37

FORT CALHOUN ANNUAL 2010, DOSE PROJECTIONS
SPECIAL LOCATION NO. 37 COW
AT 0.65 MILES SSW

ANNUAL_BETA_AIR_DOSE = 7.72E-04 MILLRADS
ANNUAL_GAMMA_AIR_DOSE = 1.62E-03 MILLRADS

PATHWAY	T.BODY	GI-TRACT	BONE	LIVER	KIDNEY	THYROID	LUNG	SKIN
PLUME	1.07E-03	1.07E-03	1.07E-03	1.07E-03	1.07E-03	1.07E-03	1.08E-03	1.78E-03
GROUND	0.00E+00	0.00E+00	0.00E+00	0.00E+00	0.00E+00	0.00E+00	0.00E+00	0.00E+00
COW MILK								
ADULT	4.97E-03	4.97E-03	2.39E-02	4.97E-03	4.97E-03	4.97E-03	4.97E-03	4.97E-03
TEEN	9.06E-03	9.06E-03	4.40E-02	9.06E-03	9.06E-03	9.06E-03	9.06E-03	9.06E-03
CHILD	2.21E-02	2.21E-02	1.08E-01	2.21E-02	2.21E-02	2.21E-02	2.21E-02	2.21E-02
INFANT	4.59E-02	4.59E-02	2.12E-01	4.59E-02	4.59E-02	4.59E-02	4.59E-02	4.59E-02

TABLE IV-B-1

FORT CALHOUN 1 DOSE CONTRIBUTIONS FROM GASEOUS EFFLUENTS
UNRESTRICTED AREA BOUNDARY
REQUIRED BY TECHNICAL SPECIFICATION 5.9.4.a.
JANUARY 1, 2010 TO DECEMBER 31, 2010

MAXIMUM SITE BOUNDARY GAMMA AIR DOSE - 3.36E-03 MILLRADS

MAXIMUM SITE BOUNDARY BETA AIR DOSE - 1.60E-03 MILLRADS

TABLE IV-C-1

FORT CALHOUN ANNUAL 2010, DOSE PROJECTIONS
ALARA ANNUAL INTEGRATED POPULATION DOSE SUMMARY (PERSON-REM)

PATHWAY	T.BODY	GI-TRACT	BONE	LIVER	KIDNEY	THYROID	LUNG	SKIN
PLUME	1.89E-04	1.89E-04	1.89E-04	1.89E-04	1.89E-04	1.89E-04	1.94E-04	4.62E-04
	0.41%	0.41%	0.09%	0.41%	0.41%	0.41%	0.42%	1.00%
INHAL	8.55E-04	8.55E-04	0.00E+00	8.55E-04	8.55E-04	8.55E-04	8.55E-04	8.55E-04
	1.87%	1.87%	0.00%	1.87%	1.87%	1.87%	1.87%	1.85%
VEGET	2.53E-02	2.53E-02	1.22E-01	2.53E-02	2.53E-02	2.53E-02	2.53E-02	2.53E-02
	55.15%	55.15%	56.02%	55.15%	55.15%	55.15%	55.15%	54.82%
COW MILK	7.12E-03	7.12E-03	3.46E-02	7.12E-03	7.12E-03	7.12E-03	7.12E-03	7.12E-03
	15.54%	15.54%	15.90%	15.54%	15.54%	15.54%	15.54%	15.45%
MEAT	1.24E-02	1.24E-02	6.10E-02	1.24E-02	1.24E-02	1.24E-02	1.24E-02	1.24E-02
	27.03%	27.03%	27.99%	27.03%	27.03%	27.03%	27.03%	26.87%
TOTAL	4.58E-02	4.58E-02	2.18E-01	4.58E-02	4.58E-02	4.58E-02	4.58E-02	4.61E-02

SECTION V

DOSE FROM LIQUID EFFLUENTS

LADTAP II OUTPUT

Technical Specification 5.9.4.a

January 1, 2010 - December 31, 2010

Radioactive Effluent Releases - First, Second, Third, and Fourth Quarters 2010

LIQUID EFFLUENTS

During the reporting period, a total of 1.98E-03 curies of radioactive liquid materials less tritium, dissolved noble gases, and alpha were released to the Missouri River at an average concentration of 5.12E-11 µCi/mL. This represents 5.12E-03 percent of the limits specified in Appendix B to 10 CFR 20 (1.0E-06 µCi/mL for unrestricted areas), 178 curies of tritium were discharged at an average diluted concentration of 1.63E-05 µCi/mL or 1.63 percent of ECL (1.0E-03 µCi/mL).

No gross alpha radioactivity was identified by Off-site vendor analysis of quarterly liquid composites for the reporting period.

Dilution water during the period amounted to 1.13E+10 liters, while liquid waste discharges consisted of 2.27E+06 liters of radioactive liquid waste.

A. Potential Annual Doses to Individuals from Liquid Releases

Total body, skin, and organ mRem for liquid releases were calculated for all significant liquid pathways using the annual configuration of the LADTAP II program.

The inputs to LADTAP II for the annual period from January 1, 2010 through December 31, 2010 were as follows:

(1) All liquid effluents were as described in Section IV except for entrained noble gases (Ar-41, Xe-131M, Xe-133M, Xe-133, Xe-135M, Xe-135, Kr-85M, Kr-87, and Kr-88).

(2) An average plant discharge rate of 697.5 cubic feet per second (CFS) was utilized for 2010. The average discharge rate during releases was 542.0 cubic feet per second (CFS).

(3) Dilution factors (inverse of the mixing ratios) were computed based on Regulatory Guide 1.113 (equation 7 in Section 2.a.1 of Appendix A) for a one dimensional transport model.

(4) Drinking water transport times of 6.6 hours to the Omaha intake and 7.0 hours to the Council Bluffs intake were used for dose calculations.

(5) A shorewidth factor of 0.2 was used.

(6) All dose factors, transport times from receptor to individual, and usage factors are defined by Regulatory Guide 1.109 and NUREG-0172.

The discharge site was chosen to present the most conservative estimate of mRem dose for an average adult, teenager, child, and infant. A conservative approach is also presented by the assumption that Omaha and Council Bluffs receive all drinking water from the Missouri River.

B. Potential Annual Doses to Population from Liquid Releases

The LADTAP II program in its annual configuration was also used to calculate to total body and organ doses for the population of 853,274 within a 50-mile radius of the plant (based on the 2000 census). The same input was used as in the individual cases with the addition of the following:

(1) Dilution factors and transport times for the pathways of sport fish, commercial fish, recreation and biota were calculated based on a distance of two miles downstream as approximately the distance to the nearest recreation facility - DeSoto National Wildlife Preserve.

(2) The total fish harvest for both sport and commercial purposes was calculated using an average commercial fish catch for Nebraska.

```
L      AAA   DDDD   TTTTT   AAA   PPPP     IIIII IIIII
L     A   A  D   D    T    A   A  P   P      I     I
L     A   A  D   D    T    A   A  P   P      I     I
L     AAAAA  D   D    T    AAAAA  PPPP       I     I
L     A   A  D   D    T    A   A  P          I     I
LLLLL A   A  DDDD     T    A   A  P        IIIII IIIII
```

EVALUATION OF RADIATION DOSES FROM RELEASES OF RADIACTIVITY

IN NUCLEAR POWER PLANTS LIQUID EFFLUENTS

REVISION DATE: PNL VAX - OCTOBER 1985

FORT CALHOUN ANNUAL 2010, DOSE PROJECTIONS

RADIOLOGICAL ASSESSMENT BRANCH

DIVISION OF SYSTEMS INTEGRATION

U. S. NUCLEAR REGULATORY COMMISSION

WASHINGTON, D. C.

LOCATION FRESHWATER INTAKE

ADULT DOSES

PATHWAY	SKIN	BONE	LIVER	TOTAL BODY	THYROID	KIDNEY	LUNG	GI-LLI
	DOSE (MREM PER YEAR INTAKE)							
FISH		9.78E-04	1.43E-03	9.67E-04	5.71E-05	5.21E-04	2.12E-04	8.79E-05
DRINKING		4.11E-06	5.28E-04	5.26E-04	5.22E-04	5.24E-04	5.23E-04	5.23E-04
SHORELINE	1.77E-06	1.52E-06	1.52E-06	1.52E-06	1.52E-06	1.52E-06	1.52E-06	1.52E-06
SWIMMING		7.28E-09	7.28E-09	7.28E-09	7.28E-09	7.28E-09	7.28E-09	7.28E-09
BOATING		3.64E-09	3.64E-09	3.64E-09	3.64E-09	3.64E-09	3.64E-09	3.64E-09
TOTAL	1.77E-06	9.83E-04	1.96E-03	1.50E-03	5.81E-04	1.05E-03	7.36E-04	6.13E-04

	USAGE (KG/YR,HR/YR)	DILUTION	TIME(HR)
FISH	21.0	7.3	24.00
DRINKING	730.0	30.8	18.60
SHORELINE	12.0	7.3	0.00
SWIMMING	12.0	7.3	0.00
BOATING	12.0	7.3	0.00

SHOREWIDTH FACTOR=0.2

TEENAGER DOSES

PATHWAY	SKIN	BONE	LIVER	TOTAL BODY	THYROID	KIDNEY	LUNG	GI-LLI
	DOSE (MREM PER YEAR INTAKE)							
FISH		1.05E-03	1.47E-03	5.50E-04	4.38E-05	5.27E-04	2.32E-04	6.71E-05
DRINKING		4.03E-06	3.74E-04	3.70E-04	3.68E-04	3.70E-04	3.69E-04	3.68E-04
SHORELINE	9.89E-06	8.46E-06	8.46E-06	8.46E-06	8.46E-06	8.46E-06	8.46E-06	8.46E-06
SWIMMING		4.06E-08	4.06E-08	4.06E-08	4.06E-08	4.06E-08	4.06E-08	4.06E-08
BOATING		2.03E-08	2.03E-08	2.03E-08	2.03E-08	2.03E-08	2.03E-08	2.03E-08
TOTAL	9.89E-06	1.06E-03	1.85E-03	9.28E-04	4.20E-04	9.05E-04	6.09E-04	4.44E-04

	USAGE (KG/YR,HR/YR)	DILUTION	TIME(HR)
FISH	16.0	7.3	24.00
DRINKING	510.0	30.8	18.60
SHORELINE	67.0	7.3	0.00
SWIMMING	67.0	7.3	0.00
BOATING	67.0	7.3	0.00

SHOREWIDTH FACTOR=0.2

C H I L D D O S E S

PATHWAY	SKIN	BONE	LIVER	TOTAL BODY	THYROID	KIDNEY	LUNG	GI-LLI
	DOSE__(MREM PER YEAR INTAKE)							
FISH		1.31E-03	1.32E-03	2.31E-04	3.63E-05	4.54E-04	1.87E-04	4.54E-05
DRINKING		1.17E-05	7.18E-04	7.09E-04	7.07E-04	7.11E-04	7.08E-04	7.07E-04
SHORELINE	2.07E-06	1.77E-06	1.77E-06	1.77E-06	1.77E-06	1.77E-06	1.77E-06	1.77E-06
SWIMMING		8.49E-09	8.49E-09	8.49E-09	8.49E-09	8.49E-09	8.49E-09	8.49E-09
BOATING		4.25E-09	4.25E-09	4.25E-09	4.25E-09	4.25E-09	4.25E-09	4.25E-09
TOTAL	2.07E-06	1.33E-03	2.04E-03	9.41E-04	7.45E-04	1.17E-03	8.97E-04	7.54E-04

	USAGE (KG/YR,HR/YR)	DILUTION	TIME(HR)
FISH	6.9	7.3	24.00
DRINKING	510.0	30.8	18.60
SHORELINE	14.0	7.3	0.00
SWIMMING	14.0	7.3	0.00
BOATING	14.0	7.3	0.00

SHOREWIDTH FACTOR=0.2

I N F A N T D O S E S

PATHWAY	SKIN	BONE	LIVER	TOTAL BODY	THYROID	KIDNEY	LUNG	GI-LLI
	DOSE__(MREM PER YEAR INTAKE)							
FISH		0.00E+00	0.00E+00	0.00E+00	0.00E+00	0.00E+00	0.00E+00	0.00E+00
DRINKING		1.21E-05	7.08E-04	6.95E-04	6.94E-04	6.98E-04	6.96E-04	6.94E-04
SHORELINE	0.00E+00	0.00E+00	0.00E+00	0.00E+00	0.00E+00	0.00E+00	0.00E+00	0.00E+00
TOTAL	0.00E+00	1.21E-05	7.08E-04	6.95E-04	6.94E-04	6.98E-04	6.96E-04	6.94E-04

	USAGE (KG/YR,HR/YR)	DILUTION	TIME(HR)
FISH	0.0	7.3	24.00
DRINKING	330.0	30.8	18.60

SHOREWIDTH FACTOR=0.2

LOCATION IS SITE DISCHG.

A D U L T D O S E S

PATHWAY	SKIN	BONE	LIVER	TOTAL BODY	THYROID	KIDNEY	LUNG	GI-LLI
				DOSE (MREM PER YEAR INTAKE)				
FISH		7.14E-03	1.04E-02	7.06E-03	4.17E-04	3.80E-03	1.54E-03	6.42E-04
DRINKING		1.27E-04	1.63E-02	1.62E-02	1.61E-02	1.62E-02	1.61E-02	1.61E-02
SHORELINE	1.29E-05	1.11E-05	1.11E-05	1.11E-05	1.11E-05	1.11E-05	1.11E-05	1.11E-05
SWIMMING		5.31E-08	5.31E-08	5.31E-08	5.31E-08	5.31E-08	5.31E-08	5.31E-08
BOATING		2.66E-08	2.66E-08	2.66E-08	2.66E-08	2.66E-08	2.66E-08	2.66E-08
TOTAL	1.29E-05	7.27E-03	2.67E-02	2.33E-02	1.65E-02	2.00E-02	1.77E-02	1.68E-02

	USAGE (KG/YR,HR/YR)	DILUTION	TIME(HR)
FISH	21.0	1.0	24.00
DRINKING	730.0	1.0	12.00
SHORELINE	12.0	1.0	0.00
SWIMMING	12.0	1.0	0.00
BOATING	12.0	1.0	0.00

SHOREWIDTH FACTOR=0.2

T E E N A G E R D O S E S

PATHWAY	SKIN	BONE	LIVER	TOTAL BODY	THYROID	KIDNEY	LUNG	GI-LLI
				DOSE (MREM PER YEAR INTAKE)				
FISH		7.63E-03	1.07E-02	4.01E-03	3.20E-04	3.84E-03	1.69E-03	4.90E-04
DRINKING		1.24E-04	1.15E-02	1.14E-02	1.13E-02	1.14E-02	1.14E-02	1.13E-02
SHORELINE	7.22E-05	6.18E-05	6.18E-05	6.18E-05	6.18E-05	6.18E-05	6.18E-05	6.18E-05
SWIMMING		2.97E-07	2.97E-07	2.97E-07	2.97E-07	2.97E-07	2.97E-07	2.97E-07
BOATING		1.48E-07	1.48E-07	1.48E-07	1.48E-07	1.48E-07	1.48E-07	1.48E-07
TOTAL	7.22E-05	7.82E-03	2.23E-02	1.55E-02	1.17E-02	1.53E-02	1.31E-02	1.19E-02

	USAGE (KG/YR,HR/YR)	DILUTION	TIME(HR)
FISH	16.0	1.0	24.00
DRINKING	510.0	1.0	12.00
SHORELINE	67.0	1.0	0.00
SWIMMING	67.0	1.0	0.00
BOATING	67.0	1.0	0.00

SHOREWIDTH FACTOR=0.2

C H I L D D O S E S

PATHWAY	DOSE (MREM PER YEAR INTAKE) SKIN	BONE	LIVER	TOTAL BODY	THYROID	KIDNEY	LUNG	GI-LLI
FISH		9.59E-03	9.65E-03	1.68E-03	2.65E-04	3.31E-03	1.36E-03	3.32E-04
DRINKING		3.62E-04	2.21E-02	2.18E-02	2.18E-02	2.19E-02	2.18E-02	2.18E-02
SHORELINE	1.51E-05	1.29E-05	1.29E-05	1.29E-05	1.29E-05	1.29E-05	1.29E-05	1.29E-05
SWIMMING		6.20E-08	6.20E-08	6.20E-08	6.20E-08	6.20E-08	6.20E-08	6.20E-08
BOATING		3.10E-08	3.10E-08	3.10E-08	3.10E-08	3.10E-08	3.10E-08	3.10E-08
TOTAL	1.51E-05	9.97E-03	3.18E-02	2.35E-02	2.21E-02	2.52E-02	2.32E-02	2.21E-02

	USAGE (KG/YR,HR/YR)	DILUTION	TIME(HR)
FISH	6.9	1.0	24.00
DRINKING	510.0	1.0	12.00
SHORELINE	14.0	1.0	0.00
SWIMMING	14.0	1.0	0.00
BOATING	14.0	1.0	0.00

SHOREWIDTH FACTOR=0.2

I N F A N T D O S E S

PATHWAY	DOSE (MREM PER YEAR INTAKE) SKIN	BONE	LIVER	TOTAL BODY	THYROID	KIDNEY	LUNG	GI-LLI
FISH		0.00E+00	0.00E+00	0.00E+00	0.00E+00	0.00E+00	0.00E+00	0.00E+00
DRINKING		3.72E-04	2.18E-02	2.14E-02	2.14E-02	2.15E-02	2.14E-02	2.14E-02
SHORELINE	0.00E+00	0.00E+00	0.00E+00	0.00E+00	0.00E+00	0.00E+00	0.00E+00	0.00E+00
TOTAL	0.00E+00	3.72E-04	2.18E-02	2.14E-02	2.14E-02	2.15E-02	2.14E-02	2.14E-02

	USAGE (KG/YR,HR/YR)	DILUTION	TIME(HR)
FISH	0.0	1.0	24.00
DRINKING	330.0	1.0	12.00

SHOREWIDTH FACTOR=0.2

* * * FISH CONSUMPTION POPULATION DOSES * * *
PERSON-REM

SPORT HARVEST

PATHWAY	AGE GROUP	USAGE	DOSE (PERSON-REM) BONE	LIVER	TOTAL BODY	THYROID	KIDNEY	LUNG	GI-LLI
FISH	ADULT	6.10E+04	2.84E-03	4.14E-03	2.81E-03	1.65E-04	1.51E-03	6.14E-04	2.54E-04
FISH	TEENAGER	7.12E+03	4.65E-04	6.53E-04	2.44E-04	1.95E-05	2.34E-04	1.03E-04	2.98E-05
FISH	CHILD	4.93E+03	9.38E-04	9.43E-04	1.65E-04	2.59E-05	3.24E-04	1.33E-04	3.24E-05
FISH	TOTAL	7.30E+04	4.24E-03	5.74E-03	3.21E-03	2.11E-04	2.07E-03	8.50E-04	3.16E-04

LOCATION	DILUTION	CATCH	TIME(HR)-INCLUDES FOOD PROCESSING TIME OF 1.68E+02 HR	POPULATION=1.24E+04
7.30E+00	7.30E+04	1.69E+02		

AVERAGE INDIVIDUAL CONSUMPTION (KG/YR) ADULT=6.90E+00 TEEN=5.20E+00 CHILD=2.20E+00

* * * FISH CONSUMPTION POPULATION DOSES * * *
PERSON-REM

COMMERCIAL HARVEST

PATHWAY	AGE GROUP	USAGE	DOSE (PERSON-REM) BONE	LIVER	TOTAL BODY	THYROID	KIDNEY	LUNG	GI-LLI
FISH	ADULT	4.18E+06	3.23E-04	4.71E-04	3.19E-04	1.88E-05	1.72E-04	6.98E-05	2.89E-05
FISH	TEENAGER	4.88E+05	5.29E-05	7.43E-05	2.78E-05	2.22E-06	2.66E-05	1.17E-05	3.38E-06
FISH	CHILD	3.38E+05	1.07E-04	1.07E-04	1.87E-05	2.95E-06	3.68E-05	1.52E-05	3.68E-06
FISH	TOTAL	5.01E+06	4.82E-04	6.52E-04	3.66E-04	2.40E-05	2.35E-04	9.67E-05	3.60E-05

LOCATION	DILUTION	CATCH	TIME(HR)-INCLUDES FOOD PROCESSING TIME OF 2.40E+02 HR	POPULATION=8.53E+05
7.30E+00	7.30E+04	2.41E+02		

AVERAGE INDIVIDUAL CONSUMPTION (KG/YR) ADULT=6.90E+00 TEEN=5.20E+00 CHILD=2.20E+00

* * * POPULATION WATER CONSUMPTION DOSES * * *

SUPPLIER-OMAHA

PATHWAY	AGE GROUP	USAGE	BONE	LIVER	TOTAL BODY	THYROID	KIDNEY	LUNG	GI-LLI
			DOSE (PERSON-REM)						
DRINKING	ADULT	1.39E+08	7.82E-04	1.01E-01	1.00E-01	9.95E-02	9.98E-02	9.96E-02	9.96E-02
DRINKING	TEENAGER	1.51E+07	1.19E-04	1.11E-02	1.10E-02	1.09E-02	1.10E-02	1.09E-02	1.09E-02
DRINKING	CHILD	2.48E+07	5.70E-04	3.49E-02	3.44E-02	3.43E-02	3.45E-02	3.44E-02	3.43E-02
DRINKING	TOTAL	1.79E+08	1.47E-03	1.46E-01	1.46E-01	1.45E-01	1.45E-01	1.45E-01	1.45E-01

POPULATION=5.29E+05 DILUTION=3.08E+01 TRANSIT TIME=3.06E+01 HR (INCLUDING 24 HR FOR TREATMENT FACILITY)

AVERAGE INDIVIDUAL CONSUMPTION (L/YR) ADULT=3.70E+02 TEEN=2.60E+02 CHILD=2.60E+02

SUPPLIER-COUNCIL BLUFFS

PATHWAY	AGE GROUP	USAGE	BONE	LIVER	TOTAL BODY	THYROID	KIDNEY	LUNG	GI-LLI
			DOSE (PERSON-REM)						
DRINKING	ADULT	2.29E+07	1.27E-04	1.63E-02	1.62E-02	1.61E-02	1.62E-02	1.61E-02	1.61E-02
DRINKING	TEENAGER	2.49E+06	1.93E-05	1.79E-03	1.78E-03	1.77E-03	1.78E-03	1.77E-03	1.77E-03
DRINKING	CHILD	4.07E+06	9.23E-05	5.64E-03	5.57E-03	5.55E-03	5.58E-03	5.56E-03	5.56E-03
DRINKING	TOTAL	2.94E+07	2.38E-04	2.37E-02	2.36E-02	2.34E-02	2.35E-02	2.34E-02	2.34E-02

POPULATION=8.70E+04 DILUTION=3.13E+01 TRANSIT TIME=3.10E+01 HR (INCLUDING 24 HR FOR TREATMENT FACILITY)

AVERAGE INDIVIDUAL CONSUMPTION (L/YR) ADULT=3.70E+02 TEEN=2.60E+02 CHILD=2.60E+02

-----CUMULATIVE TOTAL-----

PATHWAY	AGE GROUP	USAGE	BONE	LIVER	TOTAL BODY	THYROID	KIDNEY	LUNG	GI-LLI
DRINKING	CUMUL TOTAL	2.08E+08	1.71E-03	1.70E-01	1.69E-01	1.68E-01	1.69E-01	1.68E-01	1.68E-01

_____NEPA DOSES_____

NOTE--TOTAL NEPA DOSE INCLUDES SPORT CATCH

PATHWAY	AGE GROUP	USAGE	BONE	LIVER	TOTAL BODY	THYROID	KIDNEY	LUNG	GI-LLI
			DOSE (PERSON-REM)						
FISH	ADULT	1.22E+05	5.67E-03	8.28E-03	5.61E-03	3.31E-04	3.02E-03	1.23E-03	5.08E-04
FISH	TEENAGER	1.42E+04	9.29E-04	1.31E-03	4.88E-04	3.90E-05	4.68E-04	2.06E-04	5.95E-05
FISH	CHILD	9.85E+03	1.88E-03	1.89E-03	3.29E-04	5.18E-05	6.48E-04	2.67E-04	6.47E-05
FISH	TOTAL	1.46E+05	8.48E-03	1.15E-02	6.43E-03	4.22E-04	4.14E-03	1.70E-03	6.32E-04

_____HYDROSPHERE TRITIUM DOSE_____

AVERAGE INDIVIDUAL WATER CONSUMPTION = 3.0 L/DAY

PATHWAY	AGE GROUP	USAGE	BONE	LIVER	TOTAL BODY	THYROID	KIDNEY	LUNG	GI-LLI
WATER	TOTAL	2.86E+11	0.00E+00	1.36E-03	1.36E-03	1.36E-03	1.36E-03	1.36E-03	1.36E-03

* * * RECREATION POPULATION DOSES * * *

LOCATION- DOWN STREAM SWIMMING
DILUTION= 7.30E+00 TRANSIT TIME= 6.70E-01 HR SWF= 0.2

PATHWAY	AGE GROUP	USAGE	DOSE (PERSON-REM) SKIN	TOTAL BODY	THYROID
SHORELINE	TOTAL POPUL	4.10E+07	6.05E-03	5.18E-03	5.18E-03
SWIMMING	TOTAL POPUL	4.10E+07		2.49E-05	2.49E-05

LOCATION- DOWN STREAM BOATING
DILUTION= 7.30E+00 TRANSIT TIME= 6.70E-01 HR

PATHWAY	AGE GROUP	USAGE	DOSE (PERSON-REM) SKIN	TOTAL BODY	THYROID
BOATING	TOTAL POPUL	4.10E+07		1.24E-05	1.24E-05

* * * DOSE TO BIOTA * * *

MRADS PER YEAR

DILUTION= 1.00E+00 TRANSIT TIME= 0.00E+00 HR

BIOTA	INTERNAL	EXTERNAL	TOTAL
FISH	2.79E-02	4.04E-02	6.83E-02
INVERTEBRATE	1.79E-02	8.08E-02	9.87E-02
ALGAE	1.26E-02	3.88E-05	1.26E-02
MUSKRAT	1.70E-01	2.69E-02	1.97E-01
RACCOON	5.35E-02	2.02E-02	7.37E-02
HERON	7.59E-01	2.69E-02	7.86E-01
DUCK	1.59E-01	4.04E-02	2.00E-01

SECTION VI

RADIOACTIVE EFFLUENT RELEASES - SOLID RADIOACTIVE WASTE

Technical Specifications 5.9.4.a

January 1, 2010 - December 31, 2010

III. RADIOACTIVE EFFLUENT RELEASES-SOLID RADIOACTIVE WASTE EFFLUENT AND WASTE DISPOSAL REPORT

January 1, 2010 through December 31, 2010

SOLID WASTE AND IRRADIATED FUEL SHIPMENTS

A. SOLID WASTE SHIPPED OFFSITE FOR BURIAL OR DISPOSAL (NOT IRRADIATED)

1. Type of Waste	Month Shipped	Number of Shipments	Volume Cu.Meter	Curie Content	Est.Total % Error
a. Spent resins, filter sludges, evaporator bottoms, etc.	January	0	0.00E+00	0.00E+00	N/A
	February	0	0.00E+00	0.00E+00	N/A
	March	0	0.00E+00	0.00E+00	N/A
	April	2	2.62E+00	2.17E+00	20
	May	0	0.00E+00	0.00E+00	N/A
	June	0	0.00E+00	0.00E+00	N/A
	July	0	0.00E+00	0.00E+00	N/A
	August	0	0.00E+00	0.00E+00	N/A
	September	0	0.00E+00	0.00E+00	N/A
	October	0	0.00E+00	0.00E+00	N/A
	November	0	0.00E+00	0.00E+00	N/A
	December	0	0.00E+00	0.00E+00	N/A
Total (Type a)		2	2.62E+00	2.17E+00	20
b. Dry compressable, contaminated equipment, etc.	January	4	1.30E+01	1.25E-01	20
	February	1	3.43E+00	4.32E-02	20
	March	3	4.16E+00	2.88E-02	20
	April	4	4.96E+00	6.78E-01	20
	May	2	1.37E+01	8.12E-02	20
	June	1	5.86E+00	1.10E-01	20
	July	0	0.00E+00	0.00E+00	N/A
	August	0	0.00E+00	0.00E+00	N/A
	September	0	0.00E+00	0.00E+00	N/A
	October	2	6.10E-01	2.15E-01	20
	November	0	0.00E+00	0.00E+00	N/A
	December	2	1.59E+01	5.27E-02	20
Total (Type b)		19	6.16E+01	1.33E+00	20

III. RADIOACTIVE EFFLUENT RELEASES-SOLID RADIOACTIVE

(Continued)

1. Type of Waste	Month Shipped	Number of Shipments	Volume Cu.Meter	Curie Content	Est.Total % Error
c. Irradiated components and other categories.	January	0	0	0	N/A
	February	0	0	0	N/A
	March	0	0	0	N/A
	April	0	0	0	N/A
	May	0	0	0	N/A
	June	0	0	0	N/A
	July	0	0	0	N/A
	August	0	0	0	N/A
	September	0	0	0	N/A
	October	0	0	0	N/A
	November	0	0	0	N/A
	December	0	0	0	N/A
Total (Type c)		0	0	0	N/A
d. Other	January	0	0	0	N/A
	February	0	0	0	N/A
	March	0	0	0	N/A
	April	0	0	0	N/A
	May	0	0	0	N/A
	June	0	0	0	N/A
	July	0	0	0	N/A
	August	0	0	0	N/A
	September	0	0	0	N/A
	October	0	0	0	N/A
	November	0	0	0	N/A
	December	0	0	0	N/A
Total (Type d)		0	0	0	N/A

III. RADIOACTIVE EFFLUENT RELEASES-SOLID RADIOACTIVE

(Continued)

B. ESTIMATE OF MAJOR NUCLIDE COMPOSITION (By Type of Waste)

1. *Percentage of Curies from Represented Isotopes*

	Isotope	Percent	Curies	
a.	Ni-63	38.2%	8.27E-01	All other nuclides
	Co-60	26.1%	5.64E-01	constitute less
	Fe-55	9.8%	2.12E-01	than 1%
	Nb-95	8.6%	1.86E-01	
	H-3	5.6%	1.22E-01	
	Co-58	5.3%	1.15E-01	
	Cs-137	1.7%	3.60E-02	
	Zr-95	1.5%	3.20E-02	
b.	Co-58	41.5%	5.53E-01	All other nuclides
	Nb-95	15.4%	2.05E-01	constitute less
	Cs-137	9.8%	1.30E-01	than 1%
	Co-60	9.6%	1.28E-01	
	Fe-55	6.8%	9.01E-02	
	Zr-95	5.0%	6.68E-02	
	Cr-51	2.6%	3.44E-02	
	Ni-63	2.5%	3.38E-02	
	Ag-110m	2.2%	2.93E-02	
	Mn-54	1.5%	2.02E-02	
	Sb-125	1.1%	1.46E-02	
c.	N/A	N/A	N/A	
d.	N/A	N/A	N/A	

C. SOLID WASTE (DISPOSITION)

Number of Shipments	Transportation Mode	Destination
0	Closed Sole Use Vehicle Barnwell,S.C.	
21	Closed Sole Use Vehicle	Clive Utah.

D. IRRADIATED FUEL SHIPMENTS (DISPOSITION)

Number of Shipments	Transportation Mode	Destination
N/A	N/A	N/A

SECTION VII

ATTACHMENT 1

ODCM and PCP revisions for the period January 1, 2010 through December 31, 2010 in accordance with Technical Specification 5.17.d and 5.18.d, the radioactive effluent release report shall include any revisions to the Offsite Dose Calculation Manual (ODCM) and the Process Control Program (PCP).

___1___ revision(s) made to the Offsite Dose Calculation Manual (ODCM).

___0___ revision(s) made to the Process Control Program (PCP).

___1___ revision(s) made to the Process Control Program (PCP) for the period January 1, 2006 and December 31, 2006

Fort Calhoun Station
Unit No. 1

CH-ODCM-0001

OFF-SITE DOSE CALCULATION MANUAL

OFF-SITE DOSE CALCULATION MANUAL (ODCM)

Change No.	EC 49383, 45573
Reason for Change	Added definitions of Abnormal release and discharge and Residual radioactivity per Reg. 1.21, Rev. 2. Changed Table 4.1 REMP to match guidance in NUREG 1301 as required by the new revision of Reg. Guide 4.1. Updated Table 4.2 with new TLD locations added in Table 4.1. Added new guidance on reporting abnormal releases and discharges, per Reg. Guide 1.21, Rev. 2. Placed regulatory exemptions (from RG 4.1) for reducing the frequency of Land Use Survey into the basis section. Update Table 4, to reflect higher D/Q Resident pathway for dose projections, the value is based on two year average. Revised the definition of the term "Operable" in Step 1, to be consistent with standard Tech Specs. This change is being implemented as part of Tech Spec Amendment No. 264 (NRC-10-0033).
Requestor	D. Lippy, J. Shipman
Preparer	D. Lippy, J. Shipman
Issue Date	09-09-10 3:00 pm

TABLE OF CONTENTS

PART I

1. DEFINITIONS 7
2. INSTRUMENTATION 11
   2.1 Radioactive Liquid Effluent Instrumentation 11
      2.1.1 Limiting Condition for Operation 11
      2.1.2 Surveillance Requirements 11
   2.2 Radioactive Gaseous Effluent Instrumentation 15
      2.2.1 Limiting Condition for Operation 15
      2.2.2 Surveillance Requirements 15
3. RADIOACTIVE EFFLUENTS 21
   3.1 Radioactive Liquid Effluents 21
      3.1.1 Concentration 21
      3.1.2 Dose from Radioactive Liquid Effluents 24
      3.1.3 Liquid Radwaste Treatment 25
      3.1.4 Liquid Holdup Tanks 26
   3.2 Radioactive Gaseous Effluents 27
      3.2.1 Concentration 27
      3.2.2 Dose - Noble Gases 31
      3.2.3 Dose - I-131, I-133, Tritium, and Radioactive Material in Particulate Form with Half-Lives Greater than 8 Days (Other than Noble Gases) 32
      3.2.4 Gaseous Radwaste Treatment 33
   3.3 Uranium Fuel Cycle 35
      3.3.1 Total Dose-Uranium Fuel Cycle 35
4. RADIOLOGICAL ENVIRONMENTAL MONITORING PROGRAM (REMP) 36
   4.1 Monitoring Program 36
      4.1.1 Limiting Condition for Operation 36
      4.1.2 Surveillance Requirements 37
   4.2 Land Use Survey 49
      4.2.1 Limiting Condition for Operation 49
      4.2.2 Surveillance Requirements 50
   4.3 Interlaboratory Comparison Program 50
      4.3.1 Limiting Condition for Operation 50
      4.3.2 Surveillance Requirements 50
5. ADMINISTRATIVE CONTROLS 50
   5.1 Responsibilities 50
      5.1.1 FCS Chemistry Department is responsible for the implementation and maintenance of the ODCM. 50
      5.1.2 FCS Operations Department is responsible for the compliance with the ODCM in the operation of Fort Calhoun Station. 50

5.2 Radioactive Effluent Reporting Requirements....50
5.2.1 Annual Radioactive Effluent Release Report....51
5.2.2 Annual Radiological Environmental Operating Report....52
5.2.3 Special Report....53
5.2.4 EPA 40 CFR Part 190 Reporting Requirements....53
5.3 Change Mechanism....53
5.4 Meteorological Data....54
5.5 References....54
6. BASIS....55
6.1 Instrumentation....55
6.1.1 Radioactive Liquid Effluent Instrumentation....55
6.1.2 Radioactive Gaseous Effluent Instrumentation....56
6.2 Radioactive Effluents....56
6.2.1 Radioactive Liquid Effluents....56
6.2.2 Radioactive Gaseous Effluents....58
6.3 Radiological Environmental Monitoring....63
6.3.1 Monitoring Program....63
6.3.2 Land Use Survey....64
6.3.3 Interlaboratory Comparison Program....64

LIST OF TABLES

PART I

Table 1.2 - Frequency Notation 9
Table 1.3 - Radiological Effluent Controls Program Technical Specification Implementation 10
Table 2.1.1 - Radioactive Liquid Effluent Monitoring Instrumentation 12
Table 2.1.2 - Radioactive Liquid Effluent Monitoring Instrumentation Surveillance Requirements 14
Table 2.2.1 - Radioactive Gaseous Effluent Monitoring Instrumentation 16
Table 2.2.2 - Radioactive Gaseous Effluent Monitoring Instrumentation Surveillance Requirements 20
Table 3.1 - Radioactive Liquid Effluent Sampling And Analysis 23
Table 3.2 - Radioactive Airborne Effluent Sampling And Analysis 28
Table 3.3 - Sampler Deposition/transportation Correction Factors 30
Table 4.1 - Radiological Environmental Monitoring Program 38
Table 4.2 - Radiological Environmental Sampling Locations And Media 41
Table 4.3 - Detection Capabilities For Environmental Sample Analysis Lower Limit of Detection (LLD) [1, 2, 3] 47
Table 4.4 - Reporting Levels for Radioactivity Concentrations in Environmental Samples [1] 48

LIST OF FIGURES

PART I

Figure 1 - Environmental Radiological Sampling Points 43

TABLE OF CONTENTS

PART II

1. EFFLUENT MONITOR SETPOINTS 68
   1.1 Liquid Effluents 68
      1.1.1 Liquid Effluent Radiation Monitors 69
   1.2 Airborne Effluents 73
      1.2.1 Airborne Effluent Radiation Monitors 74
2. EFFLUENT CONCENTRATIONS 86
   2.1 Liquid Effluent Concentrations 86
   2.2 Airborne Effluent Concentrations 87
3. RADIOACTIVE EFFLUENT DOSE CALCULATIONS 88
   3.1 Liquid Effluent Dose Calculations 88
      3.1.1 Doses from Liquid Effluent Pathways 89
   3.2 Airborne Effluent Dose Calculations 92
      3.2.1 Noble Gas 92
      3.2.2 Radioiodine, Tritium, and Particulates 94
      3.2.3 Concentrations of Radionuclides in Foods and Vegetation from Atmospheric Releases 96
      3.2.4 Parameters for Calculating Radionuclide Concentration in Cow and Goat Milk 99
      3.2.5 Parameters for Calculating Radionuclide Concentration in Cow Meat, excluding Tritium 100
      3.2.6 Parameters for Calculating Tritium Concentrations in Vegetation 100
      3.2.7 Annual Dose from Atmospherically Released Radionuclides in Foods 101
4. LOWER LIMIT OF DETECTION (LLD) 103

LIST OF TABLES

PART II

Table 1 - Allocation Factors for Simultaneous Releases 80
Table 2 - Dose Factors for Exposure to a Semi-Infinite Cloud of Noble Gases 104
Table 3 - Bioaccumulation Factors 105
Table 4 - Highest Potential Exposure Pathways for Estimating Dose 106
Table 5 - Stable Element Transfer Data 107
Table 6 - Recommended Values for U_{ap} to Be Used for the Maximum Exposed Individual in Lieu of Site Specific Data 108
Table 7 - Animal Consumption Rates 108
Table 8 - External Dose Factors for Standing on Contaminated Ground 109
Table 9 - Inhalation Dose Factors for Adult 111
Table 10 - Inhalation Dose Factors for Teenager 113
Table 11 - Inhalation Dose Factors for Child 115
Table 12 - Inhalation Dose Factors for Infant 117
Table 13 - Ingestion Dose Factors for Adult 120
Table 14 - Ingestion Dose Factors for Teenager 122
Table 15 - Ingestion Dose Factors for Child 124
Table 16 - Ingestion Dose Factors for Infant 126
Table 17 - Recommended Values for Other Parameters 128
Table 18 - Estimated Doses Received by the General Public from On-Site Exposure 130

LIST OF FIGURES

PART II

Figure 1 - Exclusion and Site Boundary Map 81
Figure 2 - Liquid Radioactive Discharge Pathways 82
Figure 3 - Liquid Radioactive Waste Disposal System 83
Figure 4 - Airborne Effluent Discharge Pathways 84
Figure 5 - Airborne Radioactive Waste Disposal System 85

OFF-SITE DOSE CALCULATION MANUAL (ODCM)

1. DEFINITIONS

Abnormal Discharge

The unplanned or uncontrolled emission of an effluent (i.e., containing plant-related, licensed radioactive material) into the unrestricted area.

Abnormal Release

The unplanned or uncontrolled emission of an effluent (i.e., containing plant-related, licensed radioactive material).

Effluent Concentration Limit (ECL)

Radionuclide limits listed in 10 CFR Part 20, Appendix B, Table 2, Column 1.

Channel Check

A CHANNEL CHECK shall be the qualitative assessment of channel behavior during operation by observation. This determination shall include, where possible, comparison of the channel indication and/or status with other indications and/or status derived from independent instrument channels measuring the same parameter.

Channel Function Test

Injection of a simulated signal into the channel to verify that it is operable, including any alarm and/or trip initiating action.

Member(s) of the Public

Member(s) of the Public means any individual except when that individual is receiving occupational dose.

Operable - Operability

A system, subsystem, train, component or device shall be OPERABLE or have OPERABILITY when it is capable of performing its specified safety function(s) and when all necessary attendant instrumentation, controls, normal or emergency electrical power sources, cooling and seal water, lubrication, and other auxiliary equipment that are required for the system, subsystem, train, component, or device to perform its specified safety function(s) are also capable of performing their related support function(s).

Purge-Purging

PURGE or PURGING shall be any controlled process of discharging air or gas from a confinement to maintain temperature, pressure, humidity, concentration or other operating condition, in such a manner that replacement air or gas is required to purify the confinement.

1. DEFINITIONS (continued)

Residual Radioactivity

Residual radioactivity means radioactivity in structures, materials, soils, ground water, and other media at a site resulting from activities under the licensee's control. This includes radioactivity from all licensed and unlicensed sources used by the licensee, but it excludes background radiation. It also includes radioactive materials remaining at the site as a result of routine or accidental releases of radioactive material at the site and previous burials at the site, even if those burials were made in accordance with the provisions of 10 CFR Part 20.

Source Check

A SOURCE CHECK shall be the qualitative assessment of channel response when the channel sensor is exposed to a source of increased radioactivity.

Venting

VENTING shall be the controlled process of discharging air or gas from a confinement to maintain temperature, pressure, humidity, concentration, or other operating condition, in such a manner that replacement air or gas is not provided or required during VENTING. Vent, used in system names, does not imply a VENTING process.

Site Boundary

The Site Boundary is the line beyond which the land is neither owned, or leased, nor controlled by the licensee.

Unrestricted Area

An UNRESTRICTED AREA shall be any area at or beyond the SITE BOUNDARY access to which is not controlled by the licensee for purposes of protection of individuals from exposure to radiation and radioactive materials, or any area within the SITE BOUNDARY used for residential quarters or for industrial, commercial, institutional, and/or recreational purposes.

Water Effluent Concentration (WEC)

Radionuclide limits listed in 10 CFR Part 20, Appendix B, Table 2, Column 2.

Table 1.2 - Frequency Notation

The surveillance intervals are defined as follows:

NOTATION	TITLE	FREQUENCY
S	Shift	At least once per 12 hours
D	Daily	At least once per 24 hours
W	Weekly	At least once per 7 days
BW	Biweekly	At least once per 14 days
M	Monthly	At least once per 31 days
Q	Quarterly	At least once per 92 days
SA	Semiannual	At least once per 184 days
A	Annually	At least once per 366 days
R	Refueling	At least once per 18 months
P	Prior to	Prior to each release [1]

1 Performance within 24 hrs.

Table 1.3 - Radiological Effluent Controls Program Technical Specification Implementation

Technical Specification	ODCM Implementing Step
5.16.1.a	2.1.1, 2.2.1
5.16.1.b	3.1.1
5.16.1.c	Table 3.1, Table 3.2
5.16.1.d	3.1.2
5.16.1.e	3.1.2.B.1), 3.2.2.B.1)
5.16.1.f	3.1.3.1), 3.2.4.1)
5.16.1.g	3.2.1
5.16.1.h	3.2.2
5.16.1.i	3.2.3
5.16.1.j	3.3.1
5.16.2.a	4.1.1
5.16.2.b	4.2.1
5.16.2.c	4.3.1
5.17	5.3, 5.2.1.D
5.18	5.2.1.D

2. INSTRUMENTATION

2.1 Radioactive Liquid Effluent Instrumentation

2.1.1 Limiting Condition for Operation

A. The radioactive liquid effluent monitoring instrumentation channels shown in Table 2.1.1 shall be OPERABLE with their alarm/trip setpoints set to ensure that the limits of Specification 3.1.1 are not exceeded. The alarm/trip setpoints of these channels shall be determined in accordance with Section II of the Off-site Dose Calculation Manual.

APPLICABILITY: At all times

ACTION:

1) With a radioactive liquid effluent monitoring instrumentation channel alarm/trip setpoint less conservative than required by the above specification, immediately suspend the releases of radioactive liquid effluents monitored by the affected channel or declare the channel inoperable.

2) With less than the minimum number of radioactive liquid effluent monitoring instrumentation channels operable, take the action shown in Table 2.1.1. Restore inoperable effluent monitoring instrumentation to OPERABLE status within 30 days and, if unsuccessful, explain in the next Annual Radiological Effluent Release Report why this inoperability was not corrected in a timely manner. The reporting requirement is limited to the following instrumentation that monitors effluent streams: RM-055, RM-054A, and RM-054B.

2.1.2 Surveillance Requirements

A. Each radioactive liquid effluent monitoring instrumentation channel shall be demonstrated OPERABLE by performance of the CHANNEL CHECK, SOURCE CHECK, CALIBRATION, and CHANNEL FUNCTIONAL TEST at the frequencies shown in Table 2.1.2.

Table 2.1.1 - Radioactive Liquid Effluent Monitoring Instrumentation

INSTRUMENT	MINIMUM CHANNELS OPERABLE	ACTION
1. Radioactivity Monitors Providing Alarm and Automatic Termination of Release.		
a. Liquid Radwaste Effluent Line (RM-055)	1	1, 5
b. Steam Generator Blowdown Effluent Line (RM-054 A and B)	1 [1]	2, 5
2. Flow Rate Measurement Devices		
a. Liquid Radwaste Effluent Line	1	3
b. Steam Generator Blowdown Effluent Line	1	3
3. Radioactivity Recorders		
a. Liquid Radwaste Effluent Line	1	4
b. Steam Generator Blowdown Effluent Line	1	4

1 If one of the two radiation monitors is inoperable, the activity of both blowdown lines shall be monitored by the operable monitor within 2 hours of the declaration of inoperability by the Shift Manager, or the action steps of ACTION 2, Table 2.1.1 should be performed on the Steam Generator that is not being monitored.

Table 2.1.1 (continued)

TABLE NOTATION

ACTION 1 With the number of channels OPERABLE less than required by the Minimum Channels OPERABLE requirement, effluent releases may continue provided that prior to initiating a release:

1. At least two independent samples are analyzed in accordance with applicable chemistry procedures.

2. At least two qualified individuals independently verify the release rate calculations.

ACTION 2 With the number of channels OPERABLE less than required by the Minimum Channels OPERABLE requirement, effluent releases may continue provided that grab samples are analyzed for principal gamma emitters at a sensitivity of 5.0E-07 μCi/gram:

1. At least once per 12 hours when the specific activity of the secondary coolant is greater than 0.01 μCi/gram dose equivalent I-131.

2. At least daily when the specific activity of the secondary coolant is less than or equal to 0.01 μCi/gram equivalent I-131. Otherwise, suspend release of radioactive effluents via this pathway.

ACTION 3 With the number of channels OPERABLE less than required by the Minimum Channels OPERABLE requirement, effluent releases may continue provided the flow rate is determined at least once per four hours during the actual release.

ACTION 4 With the number of channels OPERABLE less than required by the Minimum Channels OPERABLE requirement, effluent releases may continue provided the radioactivity is recorded manually at least once per four hours during the actual release.

ACTION 5 During the performance of source checks the effluent radiation monitor is unable to respond, hence is considered inoperable. Effluent releases may continue uninterrupted during the performance of source checks provided the operator is stationed at the monitor during the check. If the effluent radiation monitor fails the source check, carryout the action(s) of the ODCM for the inoperable monitor or terminate the effluent release.

Table 2.1.2 - Radioactive Liquid Effluent Monitoring Instrumentation Surveillance Requirements

INSTRUMENT	CHANNEL CHECK	CHANNEL		SOURCE CHECK
		CALIBRATION	FUNCTION TEST	
1. Radioactivity Monitors Providing Alarm and Automatic Isolation				
a. RM-054A/054B	D [1]	R	Q	M
b. RM-055	----	R	Q	P
2. Flowrate Monitors				
a. Steam Generator Blowdown	D	R	Q	----

1 Visual Flowcheck Daily

2.2 Radioactive Gaseous Effluent Instrumentation

2.2.1 Limiting Condition for Operation

A. The radioactive gaseous effluent monitoring instrumentation channels shown in Table 2.2.1 shall be OPERABLE with their alarm/trip setpoints set to ensure that the limits of Specification 3.2.1 are not exceeded. The alarm/trip setpoints of these channels shall be determined in accordance with Section II of the Off-site Dose Calculation Manual.

APPLICABILITY: At all times

ACTION:

1) With a radioactive gaseous effluent monitoring instrumentation channel alarm/trip setpoint less conservative than required by the above specification, immediately suspend the releases of radioactive gaseous effluents monitored by the affected channel or declare the channel inoperable.

2) With less than the minimum number of radioactive gaseous effluent monitoring instrumentation channels operable, take the action shown in Table 2.2.1. Restore inoperable effluent monitoring instrumentation to OPERABLE status within 30 days and, if unsuccessful, explain in the next Annual Radiological Effluent Release Report why this inoperability was not corrected in a timely manner. The reporting requirement is limited to the following instrumentation that monitors effluent streams: RM-057, RM-043, RM-062, RM-063, and RM-052.

2.2.2 Surveillance Requirements

A. Each radioactive gaseous effluent monitoring instrumentation channel shall be demonstrated OPERABLE by performance of the CHANNEL CHECK, SOURCE CHECK, CALIBRATION, and CHANNEL FUNCTIONAL TEST at the frequencies shown in Table 2.2.2.

Table 2.2.1 - Radioactive Gaseous Effluent Monitoring Instrumentation

INSTRUMENT	MINIMUM CHANNELS OPERABLE	ACTION
1. Auxiliary Bldg. Exhaust Stack (RM-052, RM-062)		
a. Noble Gas	1	1, 9, 11
b. Iodine and Particulate	1	2, 9, 11
2. Laboratory and Radwaste Processing Building Stack (RM-043)		
a. Noble Gas	1	3, 9
b. Iodine and Particulate	1	4, 9
3. Condenser Off Gas (RM-057)		
a. Noble Gas	1	5, 9
4. Containment Purge Line (RM-050/51)		
a. Noble Gas	1	1, 6, 9, 11, 12
b. Iodine and Particulate	1	2, 9, 11, 12
5. Containment Pressure Relief Line (RM-050/51)		
a. Noble Gas	1	1, 9, 11
b. Iodine and Particulate	1	2, 9, 11
6. Containment Penetrations M72 and M74 (Integrated Leak Rate Test Depressurization Vent Path)	N/A	10

Table 2.2.1 (continued)

INSTRUMENT	MINIMUM CHANNELS OPERABLE	ACTION
7. Flow Rate Measurement Devices		
a. Waste Gas Discharge Header	1	7
b. Auxiliary Building Stack	1	7
c. Laboratory and Radwaste Processing Building Stack	1	7
d. Containment Purge Line	1	7
e. Containment Pressure Relief Line Annubar D/P	1	7
8. Radioactivity Chart Recorders		
a. Auxiliary Building Exhaust Stack	1	8

Table 2.2.1 (continued)

TABLE NOTATION

ACTION 1 If the Auxiliary Building Exhaust Stack Noble Gas Monitor is inoperable, releases from the containment pressure relief line and the containment purge line are to be secured in the most expeditious manner. Ventilation of the auxiliary building via the Auxiliary Building Exhaust Stack may continue provided grab samples are taken once per 12 hours. (See Table 3.2)

ACTION 2 If the Auxiliary Building Exhaust Stack Iodine and Particulate Sampler is inoperable, ventilation of the Auxiliary Building and releases from the gaseous waste discharge header, containment pressure relief line or the containment purge line may continue through the Auxiliary Building Exhaust Stack provided sample collection in accordance with Table 3.2 using auxiliary sample collection equipment is initiated within 2 hours of the declaration of inoperability by the Shift Manager.

ACTION 3 If the Noble Gas Monitor is inoperable, ventilation of the LRWPB may continue via the LRWPB stack provided grab samples are taken at least once per 12 hours. (See Table 3.2)

ACTION 4 If the Iodine and Particulate Sampler is inoperable, ventilation of the LRWPB may continue via the LRWPB Stack provided sample collection using auxiliary sample collection equipment is initiated within 2 hours of the declaration of inoperability, by the Shift Manager, in accordance with Table 3.2.

ACTION 5 During power operation, when the condenser air ejector is in service, the condenser off gas discharge shall be monitored for gross radioactivity. If this monitor is inoperable, grab samples are taken at least once per 12 hours. (See Table 3.2)

ACTION 6 The release of airborne effluents from the Containment purge line will be secured if a noble gas monitor is unavailable to monitor the containment building atmosphere.

ACTION 7 With the number of channels OPERABLE less than required by the Minimum Channels OPERABLE requirement, effluent releases may continue provided the flowrate is estimated or recorded manually at least once per four hours during the actual release.

ACTION 8 With the number of channels OPERABLE less than required by the Minimum Channels OPERABLE requirement, effluent releases may continue provided the radioactivity level is recorded manually at least once per four hours during the actual release.

Table 2.2.1 (continued)

TABLE NOTATION

ACTION 9 During the performance of source checks the effluent radiation monitor is unable to respond, hence is considered inoperable. Effluent releases may continue uninterrupted during the performance of source checks provided the operator is stationed at the monitor during the check. If the effluent radiation monitor fails the source check, carryout the Action(s) of the ODCM for the inoperable monitor or terminate the effluent release.

ACTION 10 Automatic release termination capability is not required provided manual isolation can be accomplished in accordance with the requirements of SE-ST-ILRT-0001, Containment Integrated Leakage Rate Test (CILRT) or SE-ST-CST-3001, Containment Structural Test (CST).

ACTION 11 During the ventilation of airborne effluents from the Auxiliary Building Stack at least one Auxiliary Building Exhaust fan shall be in operation.

ACTION 12 IF containment purges are made without processing through at least one of the Containment Air Cooling and Filtering Units, and it is confirmed that one half of the annual dose objective listed in Section 3.2.2 will be exceeded during the calender quarter, a special report shall be submitted to the NRC as defined in Section 3.2.4.

Table 2.2.2 - Radioactive Gaseous Effluent Monitoring Instrumentation Surveillance Requirements

INSTRUMENT	CHANNEL CHECK	CALIBRATION	CHANNEL FUNCTION TEST	SOURCE CHECK
1. Radioactivity Monitors Providing Alarm and Automatic Isolation				
a. RM-043	D	R	Q	M
b. RM-057	D	R	Q	M
c. RM-062	D	R	Q	M, P
d. RM-052 [1]	D	R	Q	M, P[1]
2. Flowrate Monitors				
a. RM-043 Sampler	D	R	Q	----
b. RM-062 Sampler	D	R	Q	----
c. RM-052 Sampler	D	R	Q	----
d. Auxiliary Bldg Exhaust Stack	D	R	Q	----
e. Laboratory and Radwaste Process Bldg Exhaust Stack	D	R	Q	----
	Operations Check		Air Flow Calibration	
3. Environmental Monitors				
a. RM-023 - Sample Station #40	M		A	
b. RM-024 - Sample Station #41	M		A	
c. RM-025 - Sample Station #28	----		----	
d. RM-026 - Sample Station #36	----		----	
e. RM-027 - Sample Station #37	M		A	
f. RM-028 - Sample Station #38	----		----	
g. RM-029 - Sample Station #39	----		----	
h. RM-035 - Sample Station #1	----		----	
i. RM-036 - Sample Station #2	M		A	
j. RM-037 - Sample Station #3	----		----	
k. RM-038 - Sample Station #4	M		A	
l. RM-039 - Sample Station #5	----		----	
m. RM-040 - Sample Station #32	M		A	

1 Required when RM-052 is sampling the Auxiliary Building Exhaust Stack.

3. RADIOACTIVE EFFLUENTS

3.1 Radioactive Liquid Effluents

3.1.1 Concentration

A. Limiting Condition for Operation

1) The release rate of radioactive material in liquid effluents shall be controlled such that the instantaneous concentrations for radionuclides, other than dissolved or entrained noble gases, do not exceed the values specified in 10 CFR Part 20 for liquid effluents at site discharge. To support plant operations, Supervisor-System Chemistry may increase this limit up to the limit specified in Technical Specifications 5.16.1.b. For dissolved or entrained noble gases, the concentration shall be limited to 2.0E-04 μCi/ml, total activity.

2) Technical Specification 5.16.1.b establishes the administrative control limit on concentration of radioactive material, other than dissolved or entrained noble gases, released in liquid effluents to unrestricted areas conforming to ten times 10 CFR Part 20.1001-20.2401, Appendix B, Table 2, Column 2. For dissolved or entrained noble gases, the concentration shall be limited to 2.0E-04 μCi/ml total activity.

APPLICABILITY: At all times

ACTION:

a) When the concentration of radioactive material released at site discharge exceeds the above limits, appropriate corrective actions shall be taken immediately to restore concentrations within the above limits.

B. Surveillance Requirements

1) Radioactive liquid waste shall be sampled and analyzed according to the sampling and analysis program in Table 3.1.

2) The results of the radioactivity analysis shall be used with the calculational methods in Part II of the ODCM to assure that the concentration at the point of release is maintained within the limits of Technical Specification 5.16.1.b.

3.1.1.B

3) Records shall be maintained of the radioactive concentrations and volume before dilution of each batch of liquid effluent released and of the average dilution flow and length of time over which each discharge occurred. Analytical results shall be submitted to the Commission in accordance with Part I, Section 5.

Table 3.1 - Radioactive Liquid Effluent Sampling And Analysis

A. Monitor, Hotel Waste Tanks & Special Liquid, Releases

Sampling Frequency	Type of Activity Analysis	Lower Limit of Detection (LLD) (μCi/ml) [1]
Each Batch	Principal Gamma Emitters [2]	5.0E-07
Each Batch	I-131	1.0E-06
Each Batch	Dissolved Noble Gases (Gamma Emitters) [2]	1.0E-05
Monthly Composite [4]	H-3	1.0E-05
Monthly Composite [4]	Gross Alpha	1.0E-07
Quarterly Composite [4]	Sr-89, Sr-90	5.0E-08
Quarterly Composite [4]	Fe-55	1.0E-06

B. Steam Generator Blowdown

Sampling Frequency	Type of Activity Analysis	Lower Limit of Detection (LLD) (μCi/ml) [1]
Weekly Composite [4]	Principal Gamma Emitters [2]	5.0E-07
Weekly Composite [4]	I-131 [3]	1.0E-06
Weekly Composite [4]	Dissolved Noble Gases (Gamma Emitters) [2]	1.0E-05
Monthly Composite [4]	H-3	1.0E-05
Monthly Composite [4]	Gross Alpha	1.0E-07
Quarterly Composite [4]	Sr-89, Sr-90	5.0E-08
Quarterly Composite [4]	Fe-55	1.0E-06

NOTES:

1 LLD is defined in Part II of the ODCM.

2 The principal gamma emitters for which the LLD specification applies exclusively are the following radionuclides: Kr-87, Kr-88, Xe-133, Xe-133m, Xe-135, and Xe-138 for dissolved or entrained gases and Mn-54, Fe-59, Co-58, Co-60, Zn-65, Mo-99, Cs-134, Cs-137, and Ce-141 for fission and corrosion products. Ce-144 shall also be measured, but with a LLD of 5.0E-06.

3 A weekly grab sample and analyses program including gamma isotopic identification will be initiated for the turbine building sump effluent when the steam generator blowdown water composite analysis indicates the I-131 concentration is greater than 1.0E-06 μCi/ml.

4 To be representative of the average quantities and concentrations of radioactive materials in liquid effluents, samples should be collected in proportion to the rate of flow of the effluent stream. Prior to analyses, all samples taken for the composite should be mixed in order for the composite sample to be representative of the average effluent release.

3.1.2 Dose from Radioactive Liquid Effluents

A. Limiting Condition for Operation

1) The dose or dose commitment to an individual in unrestricted areas from radioactive materials in liquid effluents shall be limited to the following:

a) During any calendar quarter: Less than or equal to 1.5 mrem to the total body and 5 mrem to any organ; and

b) During any calendar year: Less than or equal to 3 mrem to the total body and 10 mrem to any organ.

APPLICABILITY: At all times

ACTION:

a) If the dose contribution, due to the cumulative release of radioactive materials in liquid effluents, exceeds the annual or quarterly dose objectives, submit a Special Report to the NRC, per Section 5.2.3, within 30 days.

B. Surveillance Requirements

1) Cumulative dose contributions from liquid effluents for the current calender quarter and the current calendar year shall be determined in accordance with the methodology and parameters in Part II of the ODCM at least once per quarter.

3.1.3 Liquid Radwaste Treatment

A. Limiting Condition for Operation

1) The Liquid Radwaste Treatment System shall be OPERABLE, and appropriate portions of these systems shall be used to reduce releases of radioactivity when the projected doses due to the liquid effluent, from each unit, to UNRESTRICTED AREAS would exceed 0.06 mrem to the whole body or 0.2 mrem to any organ in a 31-day period.

APPLICABILITY: At all times

ACTION:

a) With radioactive liquid waste being discharged without treatment and in excess of the above limits and any portion of the Liquid Radwaste Treatment System not in operation, prepare and submit to the Nuclear Regulatory Commission within 30 days, pursuant to 10 CFR 50, Appendix I, a Special Report that includes the following information:

1) Explanation of why liquid radwaste was being discharged without treatment, identification of equipment or subsystem(s) not operable and reasons for inoperability.

2) Action(s) taken to restore the inoperable equipment to operable status.

3) Summary description of action(s) taken to prevent a recurrence.

B. Surveillance Requirements

1) Dose due to liquid releases shall be projected frequently and at least once per quarter, in accordance with the methodology and parameters in Part II of the ODCM, when Liquid Radwaste Treatment Systems are not fully OPERABLE.

3.1.3B

2) OPERABLE is defined as follows:

A filtration/ion exchange (FIX) system will be utilized for processing liquid radwaste. The system consists of a booster pump, charcoal pretreatment filter, and pressure vessels containing organic/inorganic resins, which can be configured for optimum performance. The effluent from the FIX system is directed to the monitor tanks for release.

Waste filters (WD-17A and WD-17B) are used only on those occasions when considered necessary, otherwise the flows from the low activity fluids may bypass the filters. No credit for decontamination factors (iodines, Cs, Rb, others) was taken for these filters during the 10 CFR Part 50 Appendix I dose design objective evaluation; therefore, the inoperability of these filters does not affect the dose contributions to any individual in the unrestricted areas via liquid pathways. The inoperability of waste filters will not be considered a reportable event in accordance with the Action listed above.

3.1.4 Liquid Holdup Tanks

Tanks included in this Specification are those outdoor tanks that are not surrounded by liners, dikes, or walls capable of holding the tanks contents and that do not have tank overflows and surrounding area drains connected to the liquid radwaste treatment system.

A. Limiting Condition for Operation

1) The quantity of radioactive material contained in each unprotected outdoor liquid holdup tank shall not exceed 10 curies, excluding tritium and dissolved or entrained noble gases.

APPLICABILITY: At all times

ACTION:

a) When the quantity of radioactive material in any unprotected outdoor liquid holdup tank exceeds 10 curies, excluding tritium and dissolved or entrained noble gasses, immediately suspend all additions of radioactive material to the tank and within 48 hours reduce the tank contents to within the limit.

3.1.4

B. Surveillance Requirements

1) The quantity of radioactive material contained in each outdoor liquid holdup tank shall be determined to be within the above limit by analyzing a representative sample of the tank's contents at least once per 7 days when radioactive material is being added to the tank.

3.2 Radioactive Gaseous Effluents

3.2.1 Concentration

A. Limiting Condition for Operation

1) The release rate of radioactive material in airborne effluents shall be controlled such that the instantaneous concentrations of radionuclides does not exceed the values specified in 10 CFR Part 20 for airborne effluents at the unrestricted area boundary. To support plant operations, Supervisor-System Chemistry may increase this limit up to the limits specified in Technical Specification 5.16.1.g.

2) Technical Specification 5.16.1.g establishes the administrative control limit on the concentration resulting from radioactive material, other than noble gases, released in gaseous effluents to unrestricted areas conforming to ten times 10 CFR Part 20.1001-20.2401, Appendix B, Table 2, Column 1. For noble gases, the concentration shall be limited to five times 10 CFR Part 20.1001-20.2401, Appendix B, Table 2, Column 1.

APPLICABILITY: At all times

ACTION:

a) When the concentration of radioactive material released to unrestricted areas exceeds the above limits, appropriate corrective actions shall be taken immediately to restore concentrations within the above limits.

B. Surveillance Requirements

1) Radioactive gaseous wastes shall be sampled and analyzed according to the sampling and analysis program of Table 3.2. The results of the radioactivity analysis shall be used to assure the limits in 3.2.1.A are not exceeded.

Table 3.2 - Radioactive Airborne Effluent Sampling And Analysis

A. Gas Decay Tank Releases

Sampling Frequency	Type of Activity Analysis	Lower Limit of Detection (LLD) (µCi/ml) [1]
Prior to each release	Principal Gamma Emitters [2]	1.0E-04

B. Containment Purge Releases or Containment Pressure Relief Line Releases [5]

Sampling Frequency	Type of Activity Analysis	Lower Limit of Detection (LLD) (µCi/ml)1
Prior to each release	Principal Gamma Emitters [2]	1.0E-04
Prior to each release	H-3	1.0E-06

C. Condenser Off Gas Releases [5]

Sampling Frequency	Type of Activity Analysis	Lower Limit of Detection (LLD) (µCi/ml) [1]
Monthly [3]	Tritium (H-3)	1.0E-06
Monthly	Principal Gamma Emitters [2]	1.0E-04

D. Auxiliary Building Exhaust Stack [5]

Sampling Frequency	Type of Activity Analysis	Lower Limit of Detection (LLD) (µCi/ml) [1]
Weekly (Charcoal Sample)	I-131	1.0E-12
Weekly (Particulate Sample)	Principal Gamma Emitters [2]	1.0E-11
Weekly (Noble Gases)	Principal Gamma Emitters [2]	1.0E-4
Weekly	Tritium (H-3)	1.0E-06
Monthly Composite [4]	Gross Alpha	1.0E-11
Quarterly Composite (Particulate Samples)	Sr-89, Sr-90	1.0E-11

Table 3.2 (continued)

E. Laboratory and Radwaste Building Exhaust Stack [5]

Sampling Frequency	Type of Activity Analysis	Lower Limit of Detection (LLD) (μCi/ml) [1]
Weekly (Charcoal Sample)	I-131	1.0E-12
Weekly (Particulate Sample)	Principal Gamma Emitters [2]	1.0E-11
Weekly (Noble Gases)	Principal Gamma Emitters [2]	1.0E-4
Monthly Composite [4]	Gross Alpha	1.0E-11
Quarterly Composite (Particulate Sample)	Sr-89, Sr-90	1.0E-11

NOTES:

1 LLD is defined in Part II of the ODCM.

2 The principal gamma emitters for which the LLD specification applies exclusively are the following radionuclides: Kr-87, Kr-88, Xe-133, Xe-133m, Xe-135, and Xe-138 for noble gas releases and Mn-54, Fe-59, Co-58, Co-60, Zn-65, Mo-99, Cs-134, Cs-137, and Ce-141 for Iodine and particulate releases. Ce-144 shall also be measured, but with a LLD of 5.0E-06.

3 Required only when steam generator blowdown radioactivity for tritium (Table 3.1, Item B) exceeds 3.0E-03 μCi/milliliter.

4 Frequency requirement may be satisfied using weekly gross alpha results from particulate sampling media.

5 Particulate and Iodine samples shall be corrected for sampler deposition/transportation efficiency by using the approved software programs or by multiplying the activity obtained by the associated sampler multiplication factor (See Table 3.3).

Table 3.3 - Sampler Deposition/transportation Correction Factors

SAMPLER	SAMPLE	PARTICULATE		IODINE	
		DF	ACTMULT[1]	DF	ACTMULT[1]
RM-062	AB	0.411	2.433	0.669	1.495
RM-052 [2]	AB	0.638	1.567	0.653	1.531
RM-052 [2]	CONT	0.525	1.905	0.688	1.453
RM-051	CONT	0.624	1.603	0.714	1.401
RM-043	LRWPB	0.809	1.236	0.873	1.236
PORTABLE	CONT	1.000	1.000	0.950	1.053

ACRONYM DEFINITIONS:

AB - Auxiliary Building Exhaust Stack
CONT - Containment Building
LRWPB - Laboratory and Rad Waste Processing Building
DF - Deposition Factor
ACTMULT - Activity multiplication factor to correct for sample loss.

1 ACTMULT factors are automatically determined using the appropriate analysis sequence file for the sample type.
2 Sampler can be used to monitor either the Containment or Auxiliary Building.

3.2.2 Dose - Noble Gases

A. Limiting Condition for Operation

1) The dose or dose commitment to an individual in unrestricted areas from release of noble gases in airborne effluents shall be limited to the following:

a) During any calendar quarter: Less than or equal to 5 mrads for gamma radiation and less than or equal to 10 mrads for beta radiation; and

b) During any calendar year: Less than or equal to 10 mrads for gamma radiation and less than or equal to 20 mrads for beta radiation.

APPLICABILITY: At all times

ACTION:

a) If the dose contribution, due to the cumulative release of noble gases in airborne effluents, exceeds the annual or quarterly dose objectives, submit a Special Report to the NRC, per Section 5.2.3, within 30 days.

B. Surveillance Requirements

1) The radiation dose contributions from radioactive noble gases in airborne effluents shall be determined, in accordance with the methodologies and parameters of Part II of the ODCM, on a quarterly basis.

3.2.3 Dose - I-131, I-133, Tritium, and Radioactive Material in Particulate Form with Half-Lives Greater than 8 Days (Other than Noble Gases)

A. Limiting Condition for Operation

1) The dose to an individual or dose commitment to any organ of an individual in unrestricted areas due to the release of I-131, I-133 Tritium, and radioactive materials in particulate form with half-lives greater than eight days (excluding noble gases) in airborne effluents shall be limited to the following:

a) During any calendar quarter: Less than or equal to 7.5 mrem to any organ; and

b) During any calendar year: Less than or equal to 15 mrem to any organ.

APPLICABILITY: At all times

ACTION:

a) If the dose contribution, due to the cumulative release of I-131, I-133, Tritium, and radioactive materials in particulate form with half-lives greater than eight days, exceeds the annual or quarterly dose objectives, submit a Special Report to the NRC per Section 5.2.3, within 30 days.

B. Surveillance Requirements

1) The radiation dose contributions from I-131, Tritium, and radioactive materials in particulate form with half-lives greater than eight days (excluding noble gases) in airborne effluents shall be determined, in accordance with the methodologies and parameters of Part II of the ODCM, on a quarterly basis.

3.2.4 Gaseous Radwaste Treatment

A. Limiting Condition for Operation

1) In accordance with Technical specification 5.16.1.f, the Waste Gas System and the Ventilation Exhaust Systems shall be OPERABLE, and appropriate portions of these systems shall be used to reduce the releases of radioactivity when the projected doses in 31 days due to gaseous effluent releases to areas at and beyond the SITE BOUNDARY would exceed:

a) 0.2 mrad to air from gamma radiation, or

b) 0.4 mrad to air from beta radiation, or

c) 0.3 mrem to any organ of a MEMBER OF THE PUBLIC

APPLICABILITY: At all times

ACTION:

a) With radioactive gaseous waste being discharged without treatment and in excess of the above limits, prepare and submit a report to the Nuclear Regulatory Commission within 30 days, pursuant to 10 CFR 50, Appendix I, a special report that includes the following information:

1) Identification of equipment or subsystem(s) not operable and reasons for inoperability.

2) Action(s) taken to restore the inoperable equipment to operable status.

3) Summary description of action(s) taken to prevent a recurrence.

B. Surveillance Requirements

1) Dose due to gaseous releases shall be projected frequently and at least once per quarter, in accordance with the methodology and parameters in Part II of the ODCM, when Waste Gas Systems and Ventilation Exhaust Systems are not fully OPERABLE.

3.2.4.B

2) OPERABLE is defined as follows:

a) Waste Gas System

The waste airborne radioactive material at Fort Calhoun Station is collected in the vent header where the gas compressors take suction, compress the gas and deliver it to one of the four gas decay tanks. The waste airborne radioactive material is treated in these gas decay tanks by holding for radioactive decay prior to final controlled release to the environs. In order to provide conformance with the dose design objectives, gas decay tanks are normally stored for approximately 30 days and thus achieve decay of short half-life radioactive materials, e.g., I-131, Xe-133. Earlier release is allowed when a plant need exists and analytical results are in accordance with ALARA release objectives. If the radioactive airborne wastes from the gas decay tanks are discharged without processing in accordance with the above conditions, and it is confirmed that one half of the annual dose objective will be exceeded during the calendar quarter, a special report shall be submitted to the Commission pursuant to Section 3.2.4A.

b) Ventilation Exhaust Systems

The radioactive effluents from the controlled access area of the auxiliary building are filtered by the HEPA filters in the auxiliary building ventilation system. If the radioactive effluents are discharged without the HEPA filters, a special report shall be submitted to the NRC as defined in Action a) above.

The discharge from the gas decay tanks is routed through charcoal and HEPA filter unit VA-82. No credit was taken for the operation of hydrogen purge filters during the 10 CFR Part 50, Appendix I dose design evaluation and doses through the airborne effluent pathways were well below the design objectives. The unavailability of hydrogen purge filters will not be considered a reportable event.

The containment air is processed through at least one of the redundant containment HEPA and charcoal filters in the Containment Air Cooling and Filtering Units prior to purging. If the containment purges are made without processing through one of the Containment Air Cooling and Filtering Units, and it is confirmed that one half of the annual dose objective will be exceeded during the calendar quarter, a special report shall be submitted to the NRC as defined in Action a) above.

3.3 Uranium Fuel Cycle

3.3.1 Total Dose-Uranium Fuel Cycle

A. Limiting Condition for Operation

1) The dose to any real individual from uranium fuel cycle sources shall be limited to ≤ 25 mrem to the total body or any organ (except the thyroid, which shall be limited to ≤ 75 mrem) during each calendar year.

APPLICABILITY: At all times

ACTION:

a) With the calculated dose from the release of radioactive materials in liquid or gaseous effluents exceeding twice the limits of Specifications 3.1.2.A, 3.2.2.A, or 3.2.3.A, calculations shall be made including direct radiation contribution from the plant and outside storage tanks to determine whether the above limits have been exceeded. If such is the case, in lieu of any other report required by Section 5.2, prepare and submit a Special Report to the Commission pursuant to Technical Specification 5.16 that defines the corrective action to be taken to reduce subsequent releases to prevent recurrence of exceeding the above limits and includes the schedule for achieving conformance with the above limits. This Special Report , as defined in 10 CFR Part 20.2203(a)(4) and 20.2203(b), shall include an analysis that estimates the radiation exposure (dose) to a MEMBER OF THE PUBLIC from uranium fuel cycle sources, including all effluent pathways and direct radiation, for the calender year that includes the release(s) covered by this report. It shall also describe levels of radiation and concentration of radioactive material involved, and the cause of exposure levels or concentrations. If the estimated dose(s) exceeds the above limits, and if the release condition resulting in the violation of 40 CFR Part 190 has not already been corrected, the Special Report shall include a request for a variance in accordance with the provisions of 40 CFR Part 190. Submittal of the report is considered a timely request, and a variance is granted until staff action on the request is complete.

3.3.1

B. Surveillance Requirements

Cumulative dose contributions from liquid and gaseous effluents shall be determined in accordance with Surveillance requirements 3.1.2.B, 3.2.2.B and 3.2.3.B and in accordance with the methodology and parameters in Part II of the ODCM.

4. RADIOLOGICAL ENVIRONMENTAL MONITORING PROGRAM (REMP)

4.1 Monitoring Program

4.1.1 Limiting Condition for Operation

A. The Radiological Environmental Monitoring Program shall be conducted as specified in Table 4.1.

APPLICABILITY: At all times

ACTION:

1) Analytical results of this program and deviations from the sampling schedule shall be reported to the Nuclear Regulatory Commission in the Annual Radiological Environmental Operating Report (Section 5.2).

2) If the level of radioactivity from calculated doses leads to a higher exposure pathway to individuals, this pathway shall be added to the Radiological Environmental Monitoring Program. Modifications to the program shall be reported in the Annual Radiological Environmental Operating Report to the Nuclear Regulatory Commission.

3) If the level of radioactivity in an environmental sampling medium exceeds the reporting level specified in Table 4.4, and the activity is attributable to plant operation, a Special Report shall be prepared and submitted to the Nuclear Regulatory Commission within 30 days (Section 5.2.3). The detection capabilities of the equipment used for the analysis of environmental samples must meet the requirements of Table 4.3 for Lower Level of Detection (LLD).

4.1.1.A

4) If the level of radioactivity in a sample from either an onsite or offsite well, performed per the Site Groundwater Protection Program, exceeds the reporting level specified in Table 4.4, and the activity is attributable to plant operation, a Special Report shall be prepared and submitted to the Nuclear Regulatory Commission within 30 days (Section 5.2.3). The detection capabilities of the equipment used for the analysis of environmental samples must meet the requirements of Table 4.3 for Lower Level of Detection (LLD). Copies of the Special Report will be forwarded to State/Local authorities. **[AR 39127]**

5) If the level of radioactivity from either an onsite or offsite well, performed per the Site Groundwater Protection Program exceeds the reporting level specified in Table 4.4, and the activity is attributable to plant operations, state and local authorities shall be notified by the end of the next business day. NRC shall be notified per SO-R-1, Reportability Determinations. **[AR 39127]**

6) Radiological environmental sampling locations and the media that is utilized for analysis are presented in Table 4.2. Sampling locations are also illustrated on the map, Figure 1. Details of the emergency TLD locations are contained in surveillance test CH-ST-RV-0009, Environmental Sample Collection - Emergency Planning Zone Dosimeters.

7) Deviations from the monitoring program, presented in this section and detailed in Table 4.2, are permitted if specimens are unobtainable due to mitigating circumstances such as hazardous conditions, seasonal unavailability, malfunction of equipment, or if a person discontinues participation in the program, etc. If the equipment malfunctions, corrective actions will be completed as soon as practicable. If a person no longer supplies samples, a replacement will be made if possible. All deviations from the sampling schedule will be described in the Annual Radiological Environmental Operating Report, pursuant to Section 5.2.

4.1.2 Surveillance Requirements

The Radiological Environmental Monitoring Program (REMP) samples shall be collected and analyzed in accordance with Tables 4.1, 4.2, and 4.3.

Table 4.1 - Radiological Environmental Monitoring Program

Exposure Pathway and/or Sample	Collection Site [1]	Type of Analysis [2]	Frequency
1. Direct Radiation	A. Fourteen TLD indicator stations, one background station[6], total of 15.	Gamma dose	Quarterly
	B. An inner-ring of 16 stations, one in each cardinal sector in the general area of the unrestricted area boundary and within 2.5 miles.	Gamma dose	Quarterly
	C. An outer-ring of 16 stations, 1 in each cardinal sector located outside of the inner-ring, but no more distant than approximately 5 miles.	Gamma dose	Quarterly
2. Air Monitoring	A. Indicator Stations 1. 3 stations in the general area of the unrestricted area boundary 2. City of Blair 3. Desoto Township B. One background station [6]	Filter for Gross Beta [3] Charcoal for I-131 Filter for Gamma Isotopic	Weekly Weekly Quarterly composite of weekly filters
3. Water	A. Missouri River at nearest downstream drinking water intake. B. Missouri River downstream near the mixing zone. C. Missouri River upstream of Plant intake (background)[6].	Gamma Isotopic, H-3 I^{131} analysis on each composite when the dose calculated for the consumption of water is > 1 mrem/year[7]	Composite sample over 2 week period when I^{131} analysis is performed, monthly otherwise for Gamma isotopic analysis. Quarterly composite for H-3 Analysis

Table 4.1 - Radiological Environmental Monitoring Program

Exposure Pathway and/or Sample	Collection Site [1]	Type of Analysis [2]	Frequency
4. Milk [4]	A. Nearest milk animal (cow or goat) within 5 miles B. Milk animal (cow or goat) between 5 miles and 18.75 miles (background)[6].	Gamma Isotopic and I-131	Biweekly grazing season (May to October), monthly at other times
5. Fish	A. Four fish samples within vicinity of Plant discharge. B. One background sample upstream of Plant discharge.	Gamma Isotopic	Once per season (May to October)
6. Sediment	A. One sample from downstream area on the station side of the Missouri River. B. One sample from upstream of Plant Intake (background)[6].	Gamma Isotopic	Semiannually
7. Vegetables or Food Products [5]	A. One sample in the highest exposure pathway. B. One sample from onsite crop field C. One sample outside of 5 miles (background)[6].	Gamma Isotopic	Once per season (May to October)
8. Groundwater	A. Three samples from sources potentially affected by plant operations. B. One sample outside of 5 miles (background)[6].	H_3, Gross Beta, Gamma Isotopic, Sr-90	Quarterly

NOTES:
1 See Table 4.3 for required detection limits.
2 The Lower Limit of Detection (LLD) for analysis is defined in the ODCM in accordance with the wording of NUREG-1301.
3 When a gross beta count indicates radioactivity greater than 2.5E-13 µCi/ml or 0.25 pCi/m3, (ten times the yearly mean), a gamma spectral analysis will be performed.
4 If milk samples are temporarily not available at a sampling site due to mitigating circumstances, then vegetation (broadleaf, pasture grass, etc.) shall be collected as an alternate sample at the site. If there are no milk producers within the entire 5-mile radius of the plant, then vegetation shall be collected monthly at two offsite location having the highest calculated annual average ground level D/Q and a background locale. (Reference ODCM Part 2, Table 4 "Highest Potential Exposure Pathways for Estimating Dose")
5 Samples should be collected from garden plots of 500 ft2 or more. (Reference Reg. Guide 4.8 "Environmental Technical Specifications for Nuclear Power Plants," Dec. 1975).

6 This sample may not be located in the least prevalent wind direction. The Branch Technical Position paper, Table 1, subnote "d" says this regarding background information, or control locations. **"The purpose of this sample is to obtain background information. If it is not practical to establish control locations in accordance with the distance and wind direction criteria, other sites which provide valid background data may be substituted".**

7 The dose shall be calculated for the maximum organ and age group, using methodology and parameters in the ODCM.

Table 4.2 - Radiological Environmental Sampling Locations And Media

Sample Station No.	Approximate Collection Sites	Approximate Distance from Center of Containment (miles)	Approximate Direction (degrees from true north)	Sector	Air Monitoring		TLD	Water	Milk	Sedi-ment	Fish	Vegetables and Food Products	Ground-water
					Airborne Particulate	Airborne Iodine							
1	Onsite Station, 110-meter weather tower	0.53	293°/WNW	P			X						
2[3,5]	Onsite Station, adjacent to old plant access road	0.59	207°/SSW	K	X	X	X						
3	Offsite Station, Intersection of Hwy. 75 and farm access road	0.94	145°/SE	G			X						
4	Blair OPPD office	2.86	305°/NW	Q	X	X	X						
5[1]													
6	Fort Calhoun, NE City Hall	5.18	150°/SSE	H			X						
7	Fence around intake gate, Desoto Wildlife Refuge	2.07	102°/ESE	F			X						
8	Onsite Station, entrance to Plant Site from Hwy. 75	0.55	191°/S	J			X						
9	Onsite Station, NW of Plant	0.68	305°/NW	Q			X						
10	Onsite Station, WSW of Plant	0.61	242°/WSW	M			X						
11	Offsite Station, SE of Plant	1.07	39°/SE	G			X						

Table 4.2 - Radiological Environmental Sampling Locations And Media

Sample Station No.	Approximate Collection Sites	Approximate Distance from Center of Containment (miles)	Approximate Direction (degrees from true north)	Sector	Air Monitoring		TLD	Water	Milk	Sedi-ment	Fish	Vegetables and Food Products	Ground-water
					Airborne Particulate	Airborne Iodine							
12	Metropolitan Utilities Dist., Florence Treatment Plant North Omaha, NE	14.3	154°/SSE	H				X					
13	West bank Missouri River, downstream from Plant discharge	0.45	108°/ESE	F				X		X			
14[4]	Upstream from Intake Bldg, west bank of river	0.09	4°/N	A				X		X			
15	Smith Farm	1.99	134°/SE	G									X
16[1]													
17[1]													
18[1]													
19[1]													
20[4]	Mohr Dairy	9.86	186°/S	J					X[2]			X	X
21[1]													
22	Fish Sampling Area, Missouri River	0.08 (R.M. 645.0)	6°/N	A							X		
23[4]	Fish Sampling Area, Missouri River	17.9 (R.M. 666.0)	358°/N	A							X		
24[1]													
25[1]													
26[1]													
27[1]													
28	Alvin Pechnik Farm	0.94	163°/SSE	H								X	

R20

Table 4.2 - Radiological Environmental Sampling Locations And Media

Sample Station No.	Approximate Collection Sites	Approximate Distance from Center of Containment (miles)	Approximate Direction (degrees from true north)	Sector	Air Monitoring		TLD	Water	Milk	Sedi-ment	Fish	Vegetables and Food Products	Ground-water
					Airborne Particulate	Airborne Iodine							
29[1]													
30[1]													
31[1]													
32[4]	Valley Substation #902	19.6	221°/SW	L	X	X	X						
33[3]	Bansen Farm	0.65	203°/SSW	K					X[2]				X
34[1]													
35	Onsite Farm Field	0.52	118°/ESE	F								X	
36	Offsite Station Intersection Hwy 75/Co. Rd. P37	0.75	227°/SW	L			X						
37[3]	Offsite Station Desoto Township	1.57	144°/SE	G	X	X	X						
38[1]													
39[1]													
40[3]	Herber Acreage	0.65	163°/SSE	H	X	X	X						X
41[3]	Dowler Acreage	0.73	175°/S	J	X	X	X						
42	Sector A-1	1.94	0°/NORTH	A			X						
43	Sector B-1	1.97	16°/NNE	B			X						
44	Sector C-1	1.56	41°/NE	C			X						
45	Sector D-1	1.34	71°/ENE	D			X						
46	Sector E-1	1.54	90°/EAST	E			X						
47	Sector F-1	0.45	108°/ESE	F			X						
48	Sector G-1	1.99	134°/SE	G			X						

R20

Table 4.2 - Radiological Environmental Sampling Locations And Media

Sample Station No.	Approximate Collection Sites	Approximate Distance from Center of Containment (miles)	Approximate Direction (degrees from true north)	Sector	Air Monitoring		TLD	Water	Milk	Sedi-ment	Fish	Vegetables and Food Products	Ground-water
					Airborne Particulate	Airborne Iodine							
49	Sector H-1	1.04	159°/SSE	H			X						
50	Sector J-1	0.71	179°/SOUTH	J			X						
51	Sector K-1	0.61	205°/SSW	K			X						
52	Sector L-1	0.74	229°/SW	L			X						
53	Sector M-1	0.93	248°/WSW	M			X						
54	Sector N-1	1.31	266°/WEST	N			X						
55	Sector P-1	0.60	291°/WNW	P			X						
56	Sector Q-1	0.67	307°/NW	Q			X						
57	Sector R-1	2.32	328°/NNW	R			X						
58	Sector A-2	4.64	350°/NORTH	A			X						
59	Sector B-2	2.95	26°/NNE	B			X						
60	Sector C-2	3.32	50°/NE	C			X						
61	Sector D-2	3.11	75°/ENE	D			X						
62	Sector E-2	2.51	90°/EAST	E			X						
63	Sector F-2	2.91	110°/ESE	F			X						
64	Sector G-2	3.00	104°/SE	G			X						
65	Sector H-2	2.58	154°/SSE	H			X						
66	Sector J-2	3.53	181°/SOUTH	J			X						
67	Sector K-2	2.52	205°/SSW	K			X						
68	Sector L-2	2.77	214°/SW	L			X						
69	Sector M-2	2.86	243°/WSW	M			X						

Table 4.2 - Radiological Environmental Sampling Locations And Media

Sample Station No.	Approximate Collection Sites	Approximate Distance from Center of Containment (miles)	Approximate Direction (degrees from true north)	Sector	Air Monitoring		TLD	Water	Milk	Sedi-ment	Fish	Vegetables and Food Products	Ground-water
					Airborne Particulate	Airborne Iodine							
70	Sector N-2	2.54	263°/WEST	N			X						
71	Sector P-2	2.99	299°/WNW	P			X						
72	Sector Q-2	3.37	311°/NW	Q			X						
73	Sector R-2	3.81	328°/NNW	R			X						

NOTES:
(1) Location is either not in use or currently discontinued and is documented in the table for reference only.
(2) When a milk sample is not available at a location, a broad leaf (pasture grass) vegetation sample will be collected at that location as a substitute.
(3) Locations represent highest potential exposure pathways as determined by the biennial Land Use Survey, performed in accordance with Part 1, Section 6.3.2, and are monitored as such.
(4) Background location (control). All other locations are indicators.
(5) Location for monitoring Sector K High Exposure Pathway Resident Receptor for inhalation.

Figure 1 – Environmental Radiological Sampling Points

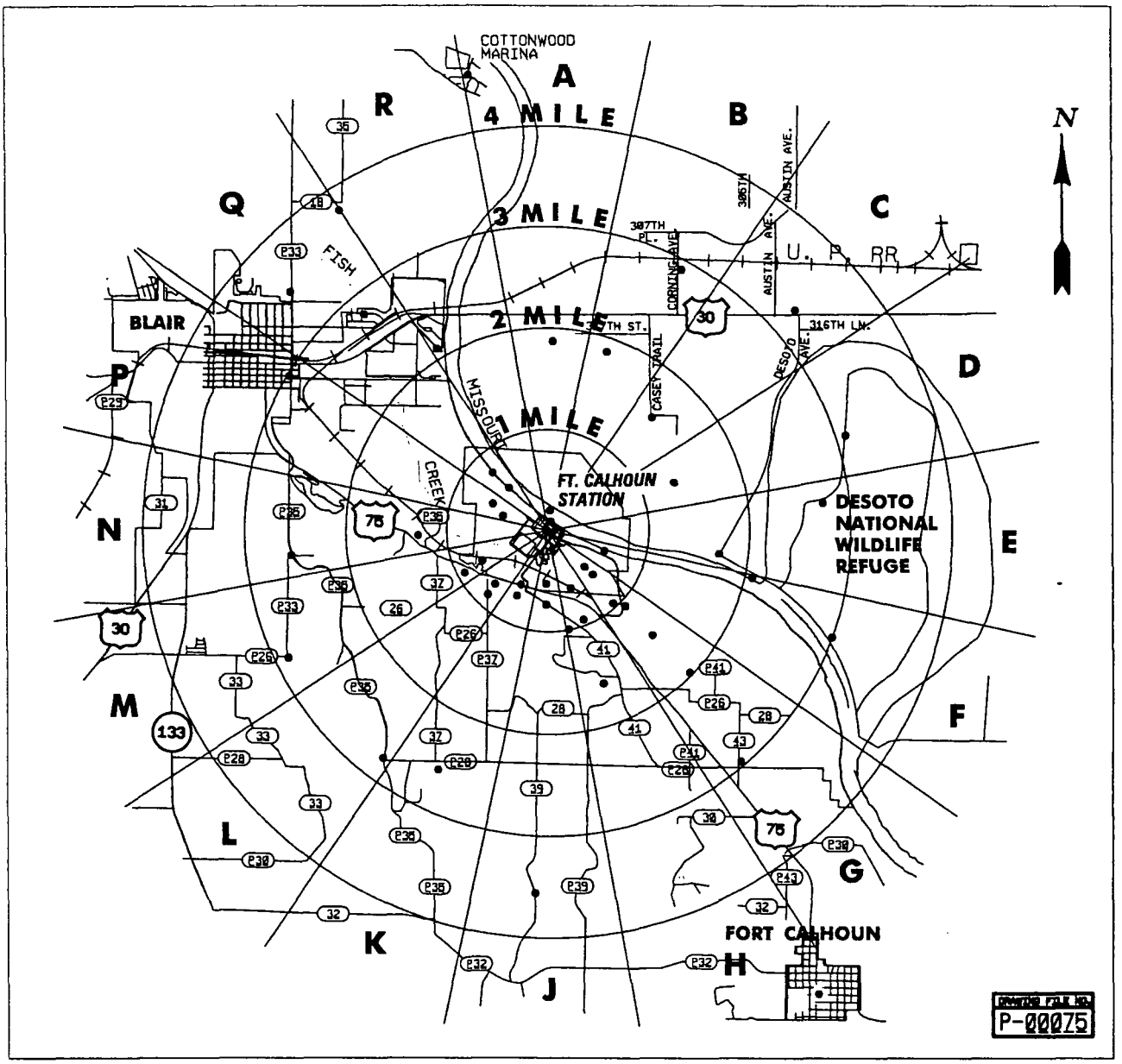

✶ Locations currently discontinued are not illustrated.

Table 4.3 - Detection Capabilities For Environmental Sample Analysis Lower Limit of Detection (LLD) [1, 2, 3]

Sample	Units	Gross Beta	H-3	Mn-54	Fe-59	Co-58, Co-60	Zn-65	Zr-95	Nb-95	I-131	Cs-134	Cs-137	Ba-140
Water	pCi/L	---	2.0E+03	1.5E+01	3.0E+01	1.5E+01	3.0E+01	1.5E+01	1.5E+01	1.0E+00[4]	1.5E+01	1.8E+01	1.5E+01
Fish	pCi/kg (wet)	---	---	1.3E+02	2.6E+02	1.3E+02	2.6E+02	---	---	---	1.3E+02	1.5E+02	---
Milk	pCi/L	---	---	---	---	---	---	---	---	1.0E+00	1.5E+01	1.8E+01	1.5E+01
Airborne Particulates or Gases	pCi/m^3	1.0E-02	---	---	---	---	---	---	---	7.0E-02	1.0E-02	1.0E-02	---
Sediment	pCi/kg (dry)	---	---	---	---	---	---	---	---	---	1.5E+02	1.8E+02	---
Grass or Broad Leaf Vegetation/ Vegetables or Food Products	pCi/kg (wet)	---	---	---	---	---	---	---	---	[5] 6.0E+01	[5] 6.0E+01	[5] 8.0E+01	---

1 This list does not mean that only these nuclides are to be considered. Other peaks that are identifiable as Plant effluents, together with those of the above nuclides, shall also be analyzed and reported in the Annual Radiological Environmental Operating Report pursuant to Part I, Section 5.2.

2 Required detection capabilities for thermoluminescent dosimeters used for environmental measurements shall be in accordance with the recommendations of Regulatory Guide 4.13.

3 The LLD is defined in Part II of the ODCM.

4 LLD for drinking water samples. If no drinking water pathway exists, the LLD of gamma isotopic analysis may be used.

5 I-131 analysis performed on broadleaf/pasture grass samples when milk is unavailable. Gamma isotopic analysis performed on food products/vegetables.

Table 4.4 - Reporting Levels for Radioactivity Concentrations in Environmental Samples [1]

Sample	Units	H-3	Mn-54	Fe-59	Co-58	Co-60	Zn-65	Zr-95	Nb-95	I-131	Cs-134	Cs-137	Ba-140
Water	pCi/L	2.0E+04	1.0E+03	4.0E+02	1.0E+03	3.0E+02	3.0E+02	4.0E+02	4.0E+02	2.0E+00[2]	3.0E+01	5.0E+01	2.0E+02
Fish	pCi/kg (wet)	---	3.0E+04	1.0E+04	3.0E+04	1.0E+04	2.0E+04	---	---	---	1.0E+03	2.0E+03	---
Milk	pCi/L	---	---	---	---	---	---	---	---	3.0E+00	6.0E+01	7.0E+01	3.0E+02
Airborne Particulates or Gases	pCi/m^3	---	---	---	---	---	---	---	---	9.0E-01	1.0E+01	2.0E+01	---
Grass or Broad Leaf Vegetation/ Vegetables or Food Products	pCi/kg (wet)	---	---	---	---	---	---	---	---	1.0E+02	1.0E+03	2.0E+03	---

1 A Non-routine report shall be submitted when more than one of the radionuclides listed above are detected in the sampling medium and:

$$\frac{Concentration\ 1}{Reporting\ Level\ 1} + \frac{Concentration\ 2}{Reporting\ Level\ 2} + \frac{Concentration\ 3}{Reporting\ Level\ 3} + \ldots \geq 1.0$$

When radionuclides other than those listed above are detected and are the result of Plant effluents, this report shall be submitted if the potential annual dose to a member of the general public is equal to or greater than the dose objectives of Part I, Section 3.1 and 3.2. This report is not required if the measured level of radioactivity was not the result of Plant effluents; however, in such an event, the condition shall be reported and described in the Annual Radiological Environmental Operating Report.

2 If no drinking water pathway exists, the LLD of gamma isotopic analysis may be used.

4.2 Land Use Survey

4.2.1 Limiting Condition for Operation

A. A Land Use Survey shall identify the location of the nearest milk animal, nearest meat animal, nearest vegetable garden, nearest groundwater source and the nearest residence in each of the 16 cardinal sectors within a distance of five miles. The survey shall be conducted under the following conditions:

1) Within a one-mile radius from the Plant site, enumeration by door-to-door or equivalent counting techniques.

2) Within a Five-mile radius, enumeration may be conducted door-to-door or by using referenced information from county agricultural agents or other reliable sources.

APPLICABILITY: At all times

ACTION:

a) If it is learned from this survey that milk animals, vegetable gardens and resident receptors are present at a location which yields a calculated dose greater than 20% from previously sampled location(s), the new location(s) shall be added to the monitoring program. Milk and vegetable garden sampling location(s) having the lowest calculated dose may then be dropped from the monitoring program at the end of the grazing and/or growing season during which the survey was conducted and the new location added to the monitoring program. Groundwater monitoring is based on a determination if source(s) are potentially affected by plant operations. Modifications to the air monitoring locations, vegetable garden sampling locations, and milk sampling locations will be made as soon as practicable. The Nuclear Regulatory Commission shall be notified of modifications to the program in the Annual Radiological Environmental Operating Report (Section 5.2).

b) If it is learned from this survey that a pathway for dose to a MEMBER OF THE GENERAL PUBLIC no longer exists, an additional pathway has been identified or site specific factors affecting the dose calculations for a pathway have changed, then this information should be documented in the Land Use Survey, the Annual Radiological Environmental Operating Report and the Annual Radioactive Effluent Release Report. This information can be used to increase the accuracy of the dose models for the Annual Radioactive Effluent Release Report as well as dose estimates performed during the reporting period (i.e., quarterly dose estimates).

4.2.2 Surveillance Requirements

A. A land use survey shall be conducted once per 24 months between the dates of June 1 and October 1. The results of the land use survey shall be submitted to the Nuclear Regulatory Commission in the Annual Radiological Environmental Operating Report (Section 5.2) for the year it was performed.

4.3 Interlaboratory Comparison Program

4.3.1 Limiting Condition for Operation

A. Analyses shall be performed on radioactive materials as part of an Interlaboratory Comparison Program that has been approved by the Nuclear Regulatory Commission.

APPLICABILITY: At all times

ACTION:

1) With analysis not being performed as required above, report the corrective actions taken to prevent a recurrence to the Commission in the Annual Radiological Environmental Operating Report (Section 5.2).

4.3.2 Surveillance Requirements

A. The results of these analyses shall be included in the Annual Radiological Environmental Operating Report (Section 5.2).

5. ADMINISTRATIVE CONTROLS

5.1 Responsibilities

5.1.1 FCS Chemistry Department is responsible for the implementation and maintenance of the ODCM.

5.1.2 FCS Operations Department is responsible for the compliance with the ODCM in the operation of Fort Calhoun Station.

5.2 Radioactive Effluent Reporting Requirements

The reporting requirements for radioactive effluents stated in this Section are to provide assurance that the limits set forth in Section I are complied with. These reports will meet the requirements for documentation of radioactive effluents contained in 10 CFR Part 50.36a; Reg. Guide 1.21, Rev. 1; Reg. Guide 4.8, Table 1; and Reg. Guide 1.109, Rev. 1.

5.2.1 Annual Radioactive Effluent Release Report

A report covering the operation of the Fort Calhoun Station during the previous calendar year shall be submitted prior to May 1 of each year per the requirements of Technical Specifications 5.9.4.a. and 10 CFR Part 50.

The Radioactive Effluent Release Report shall include:

A. A summary of the quantities of radioactive liquid and airborne effluents and solid waste released from the plant as outlined in Regulatory Guide 1.21, Revision 1.

B. A summary of the meteorological conditions concurrent with the release of airborne effluents during each quarter as outlined in Regulatory Guide 1.21, Revision 1.

C. An assessment of radiation doses from the radioactive liquid and airborne effluents released from the unit during each calendar quarter as outlined in Regulatory Guide 1.21, Revision 1. The assessment of radiation doses shall be performed in accordance with calculational methodology of the Regulatory Guide 1.109, Revision 1.

D. Changes to the Process Control Program (PCP) or to the Offsite Dose Calculation Manual (ODCM) made during the reporting period. Each change shall be identified by markings in the margin of the affected pages clearly indicating the area of the page that was changed and shall indicate the date the change was implemented.

E. A list and description of abnormal releases or abnormal discharges from the site to unrestricted areas of radioactive materials in gaseous and liquid effluents made during the reporting period.

F. An explanation of why instrumentation designated in the ODCM Part I, Sections 2.1.1 and 2.2.1 was not restored to OPERABLE status within 30 days.

G. A description of any major design changes or modifications made to the Liquid and/or Gaseous Radwaste Treatment Systems or Ventilation Exhaust Systems during the reporting period.

H. An explanation of why the liquid and/or gaseous radwaste treatment systems were not OPERABLE, causing the limits of Specifications 3.1.3.A and 3.2.4.A to be exceeded.

I. The results of sampling from offsite and onsite groundwater wells per the Site Groundwater Protection Plan. **[AR 39127]**

J. Non-routine planned discharges (e.g., discharges from remediation efforts like pumping contaminated groundwater from a leak).

5.2.2 Annual Radiological Environmental Operating Report

The Annual Radiological Environmental Operating Report for the previous one year of operation shall be submitted prior to May 1 of each year. This report contains the data gathered from the Radiological Environmental Monitoring Program. The content of the report shall include:

A. Summarized and tabulated results of the radiological environmental sampling/analysis activities following the format of Regulatory Guide 4.8, Table 1. In the event that some results are not available, the report shall be submitted noting and explaining the reasons for the missing results. The missing data shall be submitted as soon as possible in a supplementary report.

B. Interpretations and statistical evaluation of the results, including an assessment of the observed impacts of the plant operation and environment.

C. The results of participation in a NRC approved Interlaboratory Comparison Program.

D. The results of land use survey required by Section 4.2

E. The results of specific activity analysis in which the primary coolant exceeded the limits of Technical Specification 2.1.3. The following information shall be included:

1) Reactor power history starting 48 hours prior to the first sample in which the limit was exceeded.

2) Results of the last isotopic analysis for radioiodine performed prior to exceeding the limit, results of analysis while limit was exceeded and results of one analysis after the radioiodine activity was reduced to less than the limit. Each result should include date and time of sampling and the radioiodine concentrations.

3) Purification system flow history starting 48 hours prior to the first sample in which the limit was exceeded.

4) Graph of the I-131 concentration and one other radioiodine isotope concentration in micro-curies per gram as a function of time for the duration of the specific activity above the steadystate level, AND

5) The time duration when the specific activity of the primary coolant exceeded the radioiodine limit.

5.2.2

F. A map of the current environmental monitoring sample locations.

5.2.3 Special Report

If the limits or requirements of Sections 3.1.2A, 3.1.3A, 3.2.2A, 3.2.3A, 3.2.4A, 3.3.1A and/or 4.1.1A.3 and/or 4.1.1A.4) are exceeded, a Special Report shall be issued to the Commission, pursuant to Technical Specification 5.16. This report shall include: **[AR 39127]**

A. The results of an investigation to identify the causes for exceeding the specification.

B. Define and initiate a program of action to reduce levels to within the specification limits.

C. The report shall also include an evaluation of any release conditions, environmental factors, or other aspects necessary to explain the condition.

5.2.4 EPA 40 CFR Part 190 Reporting Requirements

With the calculated dose from the release of radioactive materials in liquid or gaseous effluents exceeding twice the limits of dose from Specifications 3.1.2.A, 3.2.2.A, or 3.2.3.A, calculations shall be made including direct radiation calculations, to prepare and submit a special report to the Commission within 30 days and limit the subsequent releases such that the dose to any real individual from uranium fuel cycle sources is limited to ≤ 25 mrem to the total body or any organ (except thyroid, which is limited to ≤ 75 mrem) over the calendar year. This special report shall include an analysis which demonstrates that radiation exposures to any member of the public from uranium fuel cycle sources (including all effluent pathways and direct radiation) are less than the 40 CFR Part 190 standard. Otherwise, obtain a variance from the Commission to permit releases which exceed the 40 CFR Part 190 standard. The submittal of the report is to be considered a timely request and a variance is granted pending the final action on the variance request from the Commission.

5.3 Change Mechanism

The ODCM is the controlling document for all radioactive effluent releases. It is defined as a procedure under the guidance of Technical Specification 5.8. It will be revised and reviewed by the Plant Review Committee and approved by the Plant Manager in accordance with Technical Specification 5.17. All changes to the ODCM will be forwarded to the Nuclear Regulatory Commission during the next reporting period for the Annual Radioactive Effluent Release Report in accordance with the requirements of Technical Specification 5.17.

5.4 Meteorological Data

The Annual Average χ/Q is utilized to determine the concentrations of radionuclides at the unrestricted area boundary. It is also the factor used in conjunction with the parameters and methodologies in Part II to determine unrestricted area dose on a quarterly bases or as needed. It is based on an average of the highest calculated sector χ/Q values, using all 16 sectors for each of the three previous year Annual Radioactive Effluent Release Reports, and the XOQDOQ plume trajectory model. An additional 10 percent will be added to the average for unrestricted area dose estimates performed quarterly or as needed for conservatism. When calculating χ/Q data for the Annual Radiological Effluent Release Report, if the highest calculated χ/Q for the reporting period is observed to be greater than ±10% of the Annual Average χ/Q previously calculated, contact the Supervisor-System Chemistry for further instructions. This model conforms with the Nuclear Regulatory Commissions Regulatory Guide 1.111.

Real time meteorological data will be utilized in the preparation of the Annual Radioactive Effluent Release Report. This data is used to calculate the joint frequency table, the dispersion coefficients and deposition factors in all 16 sectors. These are used in the calculation of doses to individuals in unrestricted areas as a result of the operation of Fort Calhoun Station. The models used, GASPAR 2 and LADTAP 2, meet the intent of Nuclear Regulatory Commissions Reg. Guide 1.109 and 1.21 for the reporting of doses due to routine radioactive effluent releases.

5.5 References

Regulatory Guide 1.109, Rev. 1 - Calculation of Annual Dose to man from Routine Releases of Reactor Effluents for the purpose of evaluation compliance with 10 CFR Part 50, Appendix I

Regulatory Guide 1.111, Rev. 1 - Methods for Estimating Atmospheric Transport and Dispersion of Gaseous Effluents in Routine Releases from Light-Water-Cooled Reactors.

Regulatory Guide 1.113, Rev. 1 - Estimating Aquatic Dispersion of Effluents from Accidental and Routine Releases for the purpose of Implementing Appendix I.

Regulatory Guide 4.8, Environmental Technical Specification for Nuclear Power Plants.

NRC Branch Technical Position, March 1978

NUREG-0133 - Preparation of Radiological Effluent Technical Specifications for Nuclear Power Plants.

NUREG-1301 - Offsite Dose Calculation Manual Guidance.

Regulatory Guide 1.21, Rev. 2 - Measuring, Evaluating, and Reporting Radioactivity in solid wastes and Releases of Radioactivity Materials in Liquid and Gaseous Effluents from Light-Water-Cooled Nuclear Power Plants.

Code of Federal Regulations, Title 10, Part 20

Code of Federal Regulations, Title 10, Part 50

Code of Federal Regulations, Title 40, Part 190

Fort Calhoun Revised Environmental Report (Unit No. 1)-1972

Fort Calhoun Technical Specifications (Unit No. 1)

Updated Safety Analysis Report

AR 12357, Implement Recommendations of Memo FC-0133-92, Part 1, Table 2.2.1 Action 4

AR 39127, NEI Industry Initiative on Groundwater Protection

Regulatory Guide 4.1, Rev. 2 – Radiological Environmental Monitoring for Nuclear Power Plants

6. BASIS

6.1 Instrumentation

6.1.1 Radioactive Liquid Effluent Instrumentation

The Radioactive liquid effluent instrumentation is provided to monitor and control, as applicable, the releases of radioactive material in liquid effluents during actual or potential releases of liquid effluents. The Alarm/Trip setpoints for these instruments shall be calculated in accordance with Part II of the Offsite Dose Calculation Manual (ODCM) to ensure that the alarm/trip will occur prior to exceeding the limits of 10 CFR Part 20. The OPERABILITY and use of this instrumentation is consistent with the requirements of General Design Criteria 60, 63 and 64 of Appendix A to 10 CFR Part 50.

6.1.2 Radioactive Gaseous Effluent Instrumentation

The Radioactive gaseous effluent instrumentation is provided to monitor and control, as applicable, the releases of radioactive material in gaseous effluents during actual or potential releases of liquid effluents. The Alarm/Trip setpoints for these instruments shall be calculated in accordance with Part II of the Offsite Dose Calculation Manual (ODCM) to ensure that the alarm/trip will occur prior to exceeding the limits of 10 CFR Part 20. The OPERABILITY and use of this instrumentation is consistent with the requirements of General Design Criteria 60, 63 and 64 of Appendix A to 10 CFR Part 50.

6.2 Radioactive Effluents

6.2.1 Radioactive Liquid Effluents

A. Concentration

This specification is provided to ensure that the concentration of radioactive materials released in liquid waste effluents from the site to unrestricted areas will be less than the concentration levels specified in 10 CFR Part 20, Appendix B, Table II, Column 2. This limitation provides additional assurance that the levels of radioactive materials in bodies of water outside the site will result in exposures within (1) the Section II.A design objectives of Appendix I, 10 CFR Part 50, and (2) the limits of 10 CFR Part 20.1001-20.2401 to the population. The concentration limit for dissolved or entrained noble gases is based upon the assumption that Xe-133 is the controlling isotope and its effluent concentration in air (submersion) was converted to an equivalent concentration in water.

6.2.1

B. Dose

This specification is provided to implement the requirements of Sections II.A, III.A and IV.A of Appendix I, 10 CFR Part 50. The Limiting Condition for Operation implements the guides set forth in Section II.A of Appendix I. The ACTION statements provide the required operating flexibility and at the same time implement the guides set forth in Section IV.A of Appendix I to assure that the releases of radioactive material in liquid effluents will be kept "as low as is reasonably achievable". Also, with fresh water sites with drinking water supplies which can be potentially affected by plant operations, there is reasonable assurance that the operation of the facility will not result in radionuclide concentrations in the finished drinking water that are in excess of the requirements of 40 CFR Part 141. The dose calculation methodology and parameters in Part II of the ODCM implement the requirements in Section III.A that conformance with the guides of Appendix I is to be shown by calculational procedures based on models and data such that the actual exposure of an individual through appropriate pathways is unlikely to be substantially underestimated. The equations specified in Part II of the ODCM for calculating the doses due to the actual release rates of radioactive material in liquid effluents are consistent with the methodology provided in Regulatory Guide 1.109, "Calculation of Annual Doses to Man from Routine Releases of Reactor Effluents for the Purpose of Evaluating Compliance with 10 CFR Part 50, Appendix I," Revision 1, October 1977, and Regulatory Guide 1.113, "Estimating Aquatic Dispersion of Effluents from Accidental and Routine Reactor Releases for the Purpose of Implementing Appendix I," April 1977.

C. Liquid Waste Treatment System

The OPERABILITY of the liquid radwaste treatment system ensures that this system will be available for use whenever liquid effluents require treatment prior to release to the environment. The requirement that appropriate portions of this system be used when specified provides assurance that the releases of radioactive materials in liquid effluents will be kept "as low as is reasonably achievable". This specification implements the requirements of 10 CFR Part 50.36a, General Design Criterion 60 of Appendix I to 10 CFR Part 50 and design objective and in Section II.D of Appendix A to 10 CFR Part 50. The specified limits governing the use of appropriate portions of the liquid radwaste treatment system were specified to ensure the design objectives set forth in Section II.A of Appendix I, 10 CFR Part 50 for liquid effluents are not exceeded.

6.2.1

D. Liquid Holdup Tanks

Restricting the quantity of radioactive material contained in the specified tanks provides assurance that in the event of an uncontrolled release of the tanks' contents, the resulting concentrations would be less than the limits of 10 CFR Part 20, Appendix B, Table II, Column 2, at the nearest potable water supply and the nearest surface water supply in an unrestricted area.

6.2.2 Radioactive Gaseous Effluents

A. Concentration

This specification, in conjunction with 3.2.2.A and 3.2.3.A, is provided to ensure that the dose at or beyond the Site Boundary from gaseous effluents will be within the annual dose limits of 10 CFR Part 20 for MEMBERS OF THE PUBLIC. The release rate of radioactive material in airborne effluents shall be controlled such that the instantaneous concentrations for these radionuclides do not exceed the values specified in 10 CFR Part 20 for airborne effluents at the unrestricted area boundary. To support plant operations, Supervisor-System Chemistry may increase this limit up to the limits specified in Technical Specifications 5.16.1.g. Technical Specification 5.16.1.g. establishes the administrative control limit on the concentration resulting from radioactive material, other than noble gases, released in gaseous effluents to unrestricted areas conforming to ten times 10 CFR Part 20.1001-20.2401, Appendix B, Table 2, Column 1. For noble gases, the concentration shall be limited to five times 10 CFR Part 20.1001-20.2401, Appendix B, Table 2, Column 1. Because these concentrations are applied on an instantaneous basis and because of the overriding 10 CFR Part 50 Appendix I cumulative dose limitations, these limits provide reasonable assurance that radioactive material discharged in gaseous effluents will not result in the exposure of a MEMBER OF THE PUBLIC either within or outside the Site Boundary, to annual average concentrations that would result in exceeding the annual total effective dose equivalent limit specified in 10 CFR Part 20.1301(a).

6.2.2

B. Dose - Noble Gases

This specification is provided to implement the requirements of Sections II.B, III.A and IV.A of Appendix I, 10 CFR Part 50. The Limiting Condition For Operation implements the guides set forth in Section II.B of Appendix I. The ACTION statements provide the required operating flexibility and at the same time implement the guides set forth in Section IV.A of Appendix I assure that the releases of radioactive material in gaseous effluents will be kept as low as is reasonably achievable. The surveillance requirements implement the requirements in Section III.A of Appendix I that conform with the guides of Appendix I to be shown by calculational procedures based on models and data such that the actual exposure of an individual through the appropriate pathways is unlikely to be substantially underestimated. The dose calculation methodology and parameters established in Part II of the ODCM for calculating the doses due to actual release rates of radioactive noble gases in gaseous effluents are consistent with the methodology provided in Regulatory Guide 1.109, Calculation of Annual Doses to Man from Routine Releases of Reactor Effluents for the Purpose of Evaluating Compliance with 10 CFR Part 50, Appendix I, Revision 1, October 1977 and Regulatory Guide 1.111, Methods for Estimating Atmospheric Transport and Dispersion of Gaseous Effluents in Routine Releases from Light-Water-Cooled Reactors, Revision 1, July 1977. The ODCM equations provided for determining the air doses at the site boundary are consistent with Regulatory Guides 1.109 and 1.111.

6.2.2

C. Dose - I-131, Radioactive Material in Particulate Form with Half-Lives Greater than Eight Days (Other than Noble Gases) and Tritium

This specification is provided to implement the requirements of Sections II.C, III.A and IV.A of Appendix I, 10 CFR Part 50. The Limiting Condition For Operation implements the guides set forth in Section II.C of Appendix I. The ACTION statements provide the required operating flexibility and at the same time implement the guides set forth in Section IV.A of Appendix I assure that the releases of radioactive material in gaseous effluents will be kept as low as is reasonably achievable. The surveillance requirements implement the requirements in Section III.A of Appendix I that conform with the guides of Appendix I to be shown by calculational procedures based on models and data such that the actual exposure of an individual through the appropriate pathways is unlikely to be substantially underestimated. The dose calculation methodology and parameters established in Part II of the ODCM for calculating the doses due to actual release rates of radioactive noble gases in gaseous effluents are consistent with the methodology provided in Regulatory Guide 1.109, Calculation of Annual Doses to Man from Routine Releases of Reactor Effluents for the Purpose of Evaluating Compliance with 10 CFR Part 50, Appendix I, Revision 1, October 1977 and Regulatory Guide 1.111, Methods for Estimating Atmospheric Transport and Dispersion of Gaseous Effluents in Routine Releases from Light-Water-Cooled Reactors, Revision 1, July 1977. The release rate specification for I-131, radioactive material in particulate form with half lives greater than eight days (other than noble gases) and tritium are dependant on the existing radionuclide pathways to man in the areas at or beyond the site boundary. The pathways that were examined in the development of these calculations were: 1) individual inhalation of airborne radionuclides, 2) deposition of radionuclides onto green leafy vegetation with subsequent consumption by man, 3) deposition onto grassy areas where milk animals and meat producing animals graze with consumption of the milk and meat by man, and 4) deposition on the ground with subsequent exposure of man.

6.2.2

D. Gaseous Waste Treatment

The OPERABILITY of the gaseous radwaste treatment system and the ventilation exhaust treatment systems ensures that the systems will be available for use whenever gaseous effluents require treatment prior to release to the environment. The requirement that appropriate portions of this system be used when specified provides assurance that the releases of radioactive materials in gaseous effluents will be kept as low as is reasonably achievable. This specification implements the requirements of 10 CFR Part 50.36a, General Design Criterion 60 of Appendix I to 10 CFR Part 50 and design objective and in Section II.D of Appendix A to 10 CFR Part 50. The specified limits governing the use of appropriate portions of the systems were specified to ensure the design objectives set forth in Section II.B and II.C of Appendix I, 10 CFR Part 50 for gaseous effluents are not exceeded.

6.2.2

E. Total Dose - Uranium Fuel Cycle

This specification is provided to meet the dose limitations of 40 CFR Part 190 that have been incorporated into 10 CFR Part 20.1301(d). This requires the preparation and submittal of a Special Report whenever the calculated doses due to releases of radioactivity and to radiation from uranium fuel cycle sources exceed 25 mRems to the total body or any organ, except the thyroid, which shall be limited to less than or equal to 75 mRems. It is highly unlikely that the resultant dose to a MEMBER OF THE PUBLIC will exceed the dose limits of 40 CFR Part 190 if the plant remains within twice the dose design objectives of Appendix I, 10 CFR Part 50, and if direct radiation doses (including outside storage tanks, etc.) are kept small. The Special Report shall describe a course of action that should result in the limitation of the annual dose to a MEMBER OF THE PUBLIC to within the 40 CFR Part 190 limits. For purposes of the Special Report, it may be assumed that the dose commitment to the MEMBER OF THE PUBLIC from other uranium fuel cycle sources is negligible, with the exception that dose contributions from other nuclear fuel cycle facilities at the same site or within a radius of 8 km must be considered. If the dose to any MEMBER OF THE PUBLIC is estimated to exceed the requirements of 40 CFR Part 190, the Special Report, with a request for a variance (provided the release conditions resulting in violation of 40 CFR Part 190 have not already been corrected), in accordance with the provisions of 40 CFR Part 190.11 and 10 CFR Part 20.2203(a)(4) and 20.2203(b) is considered to be a timely request and fulfills the requirements 40 CFR Part 190 until NRC staff action is completed. The variance only relates to the limits of 40 CFR Part 190, and does not apply in any way to the other requirements for dose limitation of 10 CFR Part 20. An individual is not considered a MEMBER OF THE PUBLIC during any period in which he/she is engaged in carrying out any operation that is part of the nuclear fuel cycle. Demonstration of compliance with the limits of 40 CFR Part 190 or with the design objectives of Appendix I to 10 CFR Part 50 will be considered to demonstrate compliance with the 0.1 rem limit of 10 CFR Part 20.1301.

6.3 Radiological Environmental Monitoring

6.3.1 Monitoring Program

The radiological environmental monitoring program required by this specification provides measurements of radiation and radioactive materials in those exposure pathways and for radionuclides which lead to the highest potential radiation exposures of individuals resulting from the station operation. This monitoring program thereby supplements the radiological effluent monitoring program by verifying that the measurable concentrations of radioactive materials and levels of radiation are not higher than expected on the basis of the effluent measurements and modeling of the environmental exposure pathways. The initially specified monitoring program was effective for at least the first three years of commercial operation. Following this period, program changes are initiated based on operational experience.

6.3.2 Land Use Survey

This specification is provided to ensure that changes in the use of unrestricted areas are identified and that modifications to the monitoring program are made if required by the results of this survey. The frequency of the Land Use Survey has been reduced to a biennial requirement in site procedures because persons knowledgeable in land use census monitor usage characteristics perform routine REMP sampling. This approach allows knowledge gained during sample collection to be integrated into the program, maintaining its effectiveness. The best survey information from door to door, aerial or consulting with local agricultural authorities, or equivalent, shall be used. This survey satisfies the requirements of Section IV.B.3 of Appendix I to 10 CFR Part 50. Restricting the survey to gardens of greater than 500 square feet provides assurance that significant exposure pathways via leafy vegetables will be identified and monitored since a garden of this size is the minimum required to produce the quantity (26 kg/year) of leafy vegetables assumed in Regulatory Guide 1.109 for consumption by a child. To determine this minimum garden size, the following assumptions were used, 1) that 20% of the garden was used for growing broad leaf vegetation (i.e., similar to lettuce and cabbage), and 2) a vegetation yield of 2 kg/m^2.

For milk, the survey is restricted to only milk animals (cow or goat) producing milk for human consumption. Air monitoring stations are strategically located to monitor the resident receptors who could potentially receive the highest doses from airborne radioactive material. For groundwater, samples shall be taken when sources are determined to potentially be affected by plant operations, and when sources are tapped for drinking or irrigation purposes in areas where the hydraulic gradient or recharge properties are suitable for contamination. Guidance provided in the Branch Technical Position and Technical Specification 5.16.2 is used to meet the intent of NUREG-1301.

6.3.3 Interlaboratory Comparison Program

The requirement for participation in an Interlaboratory Comparison Program is provided to ensure that independent checks on the precision and accuracy of the measurements of radioactive material in environmental sample matrices are performed as part of a quality assurance program for environmental monitoring in order to demonstrate that the results are reasonably valid for the purposes of Section IV.B.2 of Appendix I to 10 CFR Part 50.

6.4 Abnormal Release or Abnormal Discharge Reporting

6.4.1 Specific information should be reported concerning abnormal (airborne and/or liquid) releases on site and abnormal discharges to the unrestricted area. The report should describe each event in a way that would enable the NRC to adequately understand how the material was released and if there was a discharge to the unrestricted area. The report should describe the potential impact on the ingestion exposure pathway involving surface water and ground water, as applicable. The report should also describe the impact (if any) on other affected exposure pathways (e.g., inhalation from pond evaporation).

6.4.2 The following are the thresholds for reporting abnormal releases and abnormal discharges in the supplemental information section:

A. Abnormal release or Abnormal Discharges that are voluntarily reported to local authorities under NEI 07-07, Industry Ground Water Protection Initiative. **[AR 39127]**

B. Abnormal release or Abnormal discharges estimated to exceed 100 gallons of radioactive liquid where the presence of licensed radioactive material is positively identified (either in the on-site environs or in the source of the leak or spill) as greater than the minimum detectable activity for the laboratory instrumentation.

C. Abnormal releases to on-site areas that result in detectable residual radioactivity after remediation.

D. Abnormal releases that result in a high effluent radiation alarm without an anticipated trip occurring.

E. Abnormal discharges to an unrestricted area.

6.4.3 Information on Abnormal releases or Abnormal discharges should include the following, as applicable:

- Date and duration
- Location
- Volume
- Estimated activity of each radionuclide
- Effluent monitoring results (if any)
- On-site monitoring results (is any)
- Depth to the local water table
- Classification(s) of subsurface aquifer(s) (e.g., drinking water, unfit for drinking water, not used for drinking water)
- Size and extent of any ground water plume
- Expected movement/mobility of any ground water plume
- Land use characteristics (e.g., water used for irrigation)
- Remedial actions considered or taken and results obtained
- Calculated member of the public dose attributable to the release
- Calculated member of the public dose attributable to the discharge
- Actions taken to prevent recurrence, as applicable
- Whether the NRC was notified, the date(s), and the contact organization

PART II

CALCULATIONS

1. EFFLUENT MONITOR SETPOINTS

1.1 Liquid Effluents

There are two liquid discharge pathways to the Missouri River. These pathways originate with the radioactive liquid waste processing system (monitor or hotel tanks) and the steam generator blowdown system. Both of these pathways empty into the circulating water system which discharges to the Missouri River (see Figure 1). Figure 2 depicts the liquid discharge pathways and associated radiation monitors. Figure 3 depicts the methods of liquid effluent treatment.

The flowrate for dilution water varies with the number of circulating water pumps in service, the number of raw water pumps in service, and with the operation of the warm water recirculation. Some warm water from the condenser outlet is diverted from the circulating water discharge to upstream of the intake structure to help prevent ice from forming on the circulating water pump intakes during winter months. The varying dilution flowrate and utilization of warm water recirculation is accounted for in the dilution calculations for monitor tank and stream generation releases.

Technical Specification 5.16.1.b establishes the administrative control limit on concentration of radioactive material, other than dissolved or entrained noble gases, released in liquid effluents to unrestricted areas conforming to ten times 10 CFR Part 20.1001-20.2401, Appendix B, Table 2, Column 2. For dissolved or entrained noble gases, the concentration shall be limited to 2.0 E-04 μCi/ml total activity.

The liquid effluent monitoring instrumentation ALERT setpoints shall be established low enough to ensure that the concentration of radioactive material released in liquid effluents at site discharge will be less than the concentrations specified in 10 CFR Part 20, Appendix B, Table 2, Column 2.

The liquid effluent monitoring instrumentation HIGH ALARM setpoints shall be established low enough to ensure that the concentration of radioactive material released in liquid effluents at site discharge will be less than 10 times the concentrations specified in 10 CFR Part 20, Appendix B, Table 2, Column 2.

Cs-137 is used to calibrate the liquid effluent monitors.

NOTE: If the annual average χ/Q value exceeds 1.4E-04 sec/m^3, consideration should be given to basing liquid radiation monitor setpoints on an I-131 instantaneous limit of 2.0E-09 µCi/ml at the unrestricted area boundary with 10% vapor/liquid separation. Contact the Supervisor-System Chemistry for further instructions.

1.1.1 Liquid Effluent Radiation Monitors

A. Steam Generator Blowdown Monitors (RM-054A and B)

These process radiation detectors monitor the flow through the steam generator blowdown lines and automatically close the blowdown isolation valves if the monitor high alarm setpoint is reached. The monitor controls liquid effluent releases so that 10 times the 10 CFR Part 20 limit at the unrestricted area boundary of 1.0E-06 µCi/cc, is not exceeded at the site discharge.

The following calculations for maximum concentration and alarm setpoints are valid for simultaneous radioactive liquid releases of steam generator blowdown and monitor tank discharge.

The maximum allowable concentration in the blowdown line is calculated as follows:

$$C_{MAX} = \frac{(1.0E-05\ \mu Ci/ml)\ (F)}{f}$$

Where:

1.0E-05 µCi/ml = Ten times 10 CFR Part 20 Limit for unidentified radionuclides at site discharge (10 CFR Part 20, Appendix B, Note 2).

F = Total dilution flow in the discharge tunnel (gpm). (Normal flow is based on 1 circulating water pump at 120,000 gpm. Other flowrates may be used, as required.)

f = Blowdown flow rate (gpm). (Normal blowdown flow rate is based on 2 transfer pumps with a design flow of 135 gpm each, 270 gpm total. Other flow rates may be used, as required.)

C_{MAX} = Maximum allowable blowdown concentration (µCi/ml).

1.1.1.A

NOTE: Setpoints may be recalculated based on adjusted dilution flow and adjusted blowdown flow.

The **High Alarm Setpoint** (CPM):

$$Setpoint = 0.75\left[\left((K_4)(S_f)(C_{MAX})\right) + B\right]$$

Where:

0.75 = An administrative correction factor which includes the following:

15% tolerance to ensure radmonitor response in accordance with License Event Report 77-17, Docket Number 050-0285 and Telecon FC-472-77.

10% tolerance to account for the difference in detector sensitivity for the range of isotopes detected.

S_f = Detector sensitivity factor (CPM/μCi/ml). (Sensitivity based on Cs-137).

K_4 = Allocation factor for Individual Steam Generator Release (See Table 1)

B = Background (CPM)

C_{MAX} = Maximum allowable blowdown line activity (μCi/ml).

The **Alert Setpoint** will be chosen less than or equal to one tenth (1/10) the value of the high alarm setpoint value so that significant increases in activity will be identified prior to exceeding an Unrestricted Area fractional sum of 1.0. It will also provide additional time for corrective actions prior to exceeding the Alarm Setpoint.

B. Overboard Discharge Header Monitor (RM-055)

This process radiation monitor provides control of the waste monitor tank effluent by monitoring the overboard header prior to its discharge into the circulating water discharge tunnel. The concentration of activity at discharge is controlled below ten times the 10 CFR Part 20 limit of 1.0E-06 μCi/ml at site discharge for unidentified isotopes by the high alarm setpoint which closes the overboard flow control valve.

1.1.1.B

The following calculations for maximum concentration and alarm setpoints are valid for simultaneous radioactive liquid releases of monitor tank discharge and steam generator blowdown.

The maximum allowable concentration in the overboard discharge header is:

$$C_{MAX} = \frac{(1.0E-05\ \mu Ci/ml)\ (F)}{f}$$

Where:

1.0E-05 μCi/ml = Ten times 10 CFR Part 20 Limit for unidentified radionuclides at site discharge (10 CFR Part 20, Appendix B, Note 2).

F = Total dilution flow in the discharge tunnel (gpm). (Normal flow is based on 1 circulating water pump at 120,000 gpm. Other flowrates such as raw water pump(s) may be used, as required.)

f = Maximum monitor tank discharge flow rate (gpm). (Normal monitor tank maximum flow is 50 gpm. Other flow rates such as raw water pump(s) may be used, as required.)

C_{MAX} = Maximum allowable activity in discharge header (μCi/ml).

1.1.1.B

The **High Alarm Setpoint** (CPM):

$$Setpoint = 0.75 \left[\left((K_5)\ (S_f)\ (C_{MAX}) \right) + B \right]$$

Where:

0.75 = An administrative correction factor which includes the following:

15% tolerance to ensure radmonitor VIAS response in accordance with License Event Report 77-17, Docket Number 050-0285 and Telecon FC-472-77.

10% tolerance to account for the difference in detector sensitivity for the range of isotopes detected.

S_f = Detector sensitivity factor (CPM/μCi/ml). (Sensitivity based on Cs-137).

K_5 = Allocation factor for Waste Liquid Releases (See Table 1)

C_{MAX} = Maximum allowable concentration in discharge header (μCi/ml).

B = Background (CPM)

The **Alert Setpoint** will be chosen less than or equal to one tenth (1/10) the value of the high alarm setpoint value so that significant increases in activity will be identified prior to exceeding an Unrestricted Area fractional sum of 1.0. It will also provide additional time for corrective actions prior to exceeding the Alarm Setpoint.

1.2 Airborne Effluents

There are three air effluent discharge pathways at the Fort Calhoun Station: Condenser Offgas, Laboratory and Radioactive Waste Processing Building Exhaust Stack, and the Auxiliary Building Exhaust Stack. An airborne radioactive waste flow diagram with the applicable, associated radiation monitoring instrumentation and controls is presented as Figure 4. The airborne waste disposal system is presented in Figure 5.

- Auxiliary Building - The Auxiliary Building Exhaust Stack receives discharges from the waste gas decay tanks, containment purge, containment vent systems and the auxiliary building ventilation system. Radiation Monitor RM-062 provides noble gas monitoring and iodine and particulate sampling for the Auxiliary Building Exhaust Stack. Backup noble gas monitoring and iodine and particulate sampling is provided by RM-052. Ventilation Isolation Actuation Signal (VIAS) is actuated by exceeding a monitor's alarm setpoint. Actuation of VIAS will isolate releases from containment and waste gas decay tanks. The Auxiliary Building Exhaust fans will remain in operation.

- Laboratory and Radioactive Waste Processing Building (LRWPB) - Noble gas monitoring and particulate and iodine sampling is provided by RM-043. This radiation monitor/sampler does not serve a control function.

- Condenser Off-Gas Monitors - Noble gas activity is monitored by RM-057. The condenser off-gas is discharged directly to the environment. Exceeding the high alarm setpoint on RM-057 will activate isolation of main steam to the Auxiliary Steam System.

Technical Specification 5.16.1.g. establishes the administrative control limit on the concentration resulting from radioactive material, other than noble gases, released in gaseous effluents to unrestricted areas conforming to ten times 10 CFR Part 20.1001-20.2401, Appendix B, Table 2, Column 1. For noble gases, the concentration shall be limited to five times 10 CFR Part 20.1001-20.2401, Appendix B, Table 2, Column 1.

The airborne effluent monitoring instrumentation ALERT setpoints shall be established low enough to ensure that the concentration of radioactive material released in air effluents at site discharge will be less than the concentrations specified in 10 CFR Part 20, Appendix B, Table 2, Column 1.

The airborne effluent monitoring instrumentation HIGH ALARM setpoints shall be established low enough to ensure that the concentration of radioactive material released in air effluents at site discharge will be less than 5 times the concentrations specified in 10 CFR Part 20, Appendix B, Table 2, Column 1.

1.2.1 Airborne Effluent Radiation Monitors

A. Auxiliary Building Exhaust Stack Noble Gas Activity Monitor (RM-062/RM-052)

Either of these monitors may be used to measure the noble gas activity in the exhaust stack. The noble gas is monitored after passing through a particulate filter, and charcoal cartridge. The monitor controls airborne releases so that five times the 10 CFR Part 20 limit at the unrestricted area boundary of 5.0E-07 μCi/cc, based upon Xe-133, is not exceeded. The Ventilation Isolation Actuation Signal is initiated when the high alarm setpoint is reached.

The following calculations for maximum release rate and alarm setpoint are valid for simultaneous airborne releases from Auxiliary Building Exhaust Stack, Condenser Off-gas and the LRWPB Exhaust Stack.

The maximum allowable release rate for stack airborne activity is calculated as follows:

$$R_{MAX}\ \mu Ci/\sec = \left(\frac{2.5E-06\ \mu Ci/cc}{\chi/Q\sec/m^3}\right)\ 1.0E+06\ cc/m^3$$

Where:

2.5E-06 μCi/cc = 5 times the 10 CFR Part 20 Limit at the unrestricted area boundary (based upon Xe-133).

χ/Q sec/m^3 = Annual average dispersion factor at the unrestricted area boundary from ODCM Part II Table 4

1.0E+06 cc/m^3 = Constant of unit conversion.

1.2.1.A

The **High Alarm Setpoint** (CPM):

$$Setpoint = 0.75\left[K_1\left(\frac{(R_{MAX})\ (S_f)\ (60)}{(F_V)\ (28317)}\right) + B\right]$$

Where:

0.75 = An administrative correction factor which includes the following:

15% tolerance to ensure radmonitor VIAS response in accordance with License Event Report 77-17, Docket Number 050-0285 and Telecon FC-472-77.

10% tolerance to allow for the contribution of noble gases other than Xe-133 towards the total ECL fraction sum.

S_f = Detector sensitivity factor (CPM/μCi/cc). (Sensitivity based on Xe-133)

K_1 = Allocation factor for Auxiliary Building Exhaust Stack (See Table 1)

60 = Conversion (seconds to minutes).

28317 = Conversion factor (ft^3 to cc).

F_v = Auxiliary Building Exhaust stack flow rate (SCFM). (Default maximum flow rate is 122,500 cfm for 3 Auxiliary Building exhaust fans and 2 containment purge fans in operation. Other flow rates may be used, as required.)

R_{MAX} = Maximum Allowable Release Rate in μCi/sec

B = Background (CPM)

The **Alert Setpoint** will be chosen less than or equal to one fifth (1/5) the value of the high alarm setpoint value so that significant increases in activity will be identified, prior to exceeding an Unrestricted Area fractional sum of 1.0. It will also provide additional time for corrective actions prior to exceeding the Alarm Setpoint and VIAS actuation.

1.2.1

B. Condenser Off Gas Monitor (RM-057)

This monitor is located in the turbine building and monitors the condenser off-gas. The purpose of this monitor is to monitor the condenser off-gas discharges so that five times the 10 CFR Part 20 limit at the unrestricted area boundary of 5.0E-07 μCi/cc, based upon Xe-133, is not exceeded.

The following calculations for maximum release rate and alarm setpoint are valid for simultaneous airborne releases from condenser off-gas, Auxiliary Building Exhaust Stack, and the LRWPB Exhaust Stack.

The maximum allowable release rate for condenser air ejector monitor is as follows:

$$R_{MAX}\ \mu Ci/\sec = \left(\frac{2.5E-06\ \mu Ci/cc}{X/Q\sec/m^3}\right)\ 1.0E+06\ cc/m^3$$

Where:

2.5E-06 μCi/cc = 5 times the 10 CFR Part 20 Limit at the unrestricted area boundary (based upon Xe-133).

/Q sec/m^3= Annual average dispersion factor at the unrestricted area boundary from ODCM Part II, Table 4

1.0E+06 cc/m^3 = Constant of unit conversion.

1.2.1B

The **High Alarm Setpoint** (CPM):

$$Setpoint = 0.75\left[K_2\left(\frac{(R_{MAX})\,(S_f)\,(60)}{(F_V)\,(28317)}\right) + B\right]$$

Where:

0.75 = An administrative correction factor which includes the following:

15% tolerance to ensure radmonitor VIAS response in accordance with License Event Report 77-17, Docket Number 050-0285 and Telecon FC-472-77.

10% tolerance to allow for the contribution of noble gases other than Xe-133 towards the total ECL fraction sum.

S_f = Detector sensitivity factor (CPM/μCi/cc). (Sensitivity based on Xe-133)

K_2 = Allocation factor for Condenser Off Gas (See Table 1)

60 = Conversion (seconds to minutes).

28317 = Conversion factor (ft^3 to cc).

F_v = Vent stack flow rate (SCFM). Default maximum flow rate is 4,755 scfm (3 vacuum pumps in hogging mode. Other flow rates may be used, as required.)

R_{MAX} = Maximum Allowable Release Rate in μCi/sec.

B = Background (CPM)

The **Alert Setpoint** will be chosen less than or equal to one fifth (1/5) the value of the high alarm setpoint value so that significant increases in activity will be identified, prior to exceeding an Unrestricted Area fractional sum of 1.0. It will also provide additional time for corrective actions prior to exceeding the Alarm Setpoint and tripping of the auxiliary steam supply valve, RCV-978.

1.2.1

C. Laboratory and Radioactive Waste Processing Building Exhaust Stack Noble Gas Activity Monitor and Iodine and Particulate Sampler (RM-043)

RM-043 is located in the Radwaste Building and samples the LRWPB Exhaust Stack. The monitor alarm setpoint is based on five times the 10 CFR Part 20 limit for Xe-133 at the unrestricted area boundary.

The following calculations for maximum release rate and alarm setpoint are valid for simultaneous airborne releases from condenser off-gas, Auxiliary Building Exhaust Stack, and the LRWPB Exhaust Stack.

$$R_{MAX}\ \mu Ci/\sec = \left(\frac{2.5E-06\ \mu Ci/cc}{\chi/Q\sec/m^3}\right)\ 1.0E+06\ cc/m^3$$

The maximum allowable release rate for RM-043 is as follows:

Where:

2.5E-06 μCi/cc = 5 times the 10 CFR Part 20 Limit at the unrestricted area boundary (based upon Xe-133).

χ/Q = Annual average dispersion factor at the unrestricted area boundary from the ODCM Part II, Table 4

1.0E+06 cc/m^3 = Constant of unit conversion

1.2.1C **NOTE**: This monitor alarms in the Control Room. There are no automatic control functions associated with the actuation of the alarm.

The **High Alarm Setpoint** (CPM):

$$Setpoint = 0.75\left[K_3\left(\frac{(R_{MAX})\,(S_f)\,(60)}{(F_V)\,(28317)}\right) + B\right]$$

Where:

0.75	=	An administrative correction factor which includes the following: 15% tolerance to ensure radmonitor VIAS response in accordance with License Event Report 77-17, Docket Number 050-0285 and Telecon FC-472-77. 10% tolerance to allow for the contribution of noble gases other than Xe-133 towards the total ECL fraction sum.
S_f	=	Detector sensitivity factor (CPM/μCi/cc). (Sensitivity based on Xe-133)
K_3	=	Allocation factor for LRWPB Exhaust Stack (See Table 1)
60	=	Conversion (seconds to minutes).
28317	=	Conversion factor (ft^3 to cc).
F_v	=	LRWPB Exhaust stack flow rate (SCFM). (Default flow rate is 28,700 cfm. Other flow rates may be used if required.)
R_{MAX}	=	Maximum Allowable Release Rate in μCi/sec.
B	=	Background (CPM)

The **Alert Setpoint** will be chosen less than or equal to one fifth (1/5) the value of the high alarm setpoint value so that significant increases in activity will be identified, prior to exceeding an Unrestricted Area fractional sum of 1.0. It will also provide additional time for corrective actions prior to exceeding the Alarm Setpoint.

Table 1 - Allocation Factors for Simultaneous Releases

NOTE: The Fort Calhoun Station is capable of performing simultaneous airborne releases. The factors below may be adjusted to meet release requirements, provided that the sum of the Unrestricted Area Fraction Sum for all airborne releases remains less than or equal to 1.0.

A. Allocation Factors for Simultaneous Airborne Releases

1.	Auxiliary Building Exhaust Stack		Total:	0.80
	K_1 Noble Gases (RM-062 or RM-052)			0.70
	Iodine/Particulate/Tritium			0.10
	Contributing Pathways:			
	a) Auxiliary Building	0.10		
	b) Containment Building	0.65		
	c) Waste Gas Decay Tanks	0.05		
2.	Condenser/Off Gas		Total:	0.10
	K_2 Noble Gases (RM-057)			0.05
	Tritium			0.05
	Contributing Pathways:			
	a) Condenser Off Gas	0.10		
3.	Laboratory and Radioactive Waste Building Exhaust Stack		Total:	0.10
	K_3 Noble Gases (RM-043)			0.05
	Iodine/Particulate			0.05
	Contributing Pathways:			
	a) Laboratory and Radioactive Waste Building Exhaust Stack	0.10		
Airborne Release Total				**1.00**

NOTE: The Fort Calhoun Station is capable of performing simultaneous liquid releases. The factors below may be adjusted to meet release requirements provided that the sum of the Unrestricted Area Fraction Sum for all liquid releases remains less than or equal to 1.0.

B. Allocation Factors for Simultaneous Liquid Releases

1.	K_4 Steam Generator Releases (RM-054A/054B)		Total:	0.30
	Contributing Pathways:			
	a) Alpha Steam Generator (RM-054A)	0.15		
	b) Bravo Steam Generator (RM-054B)	0.15		
2.	K_5 Waste Liquid Releases (RM-055)			0.70
Liquid Release Total				**1.00**

Figure 1 - Exclusion and Site Boundary Map

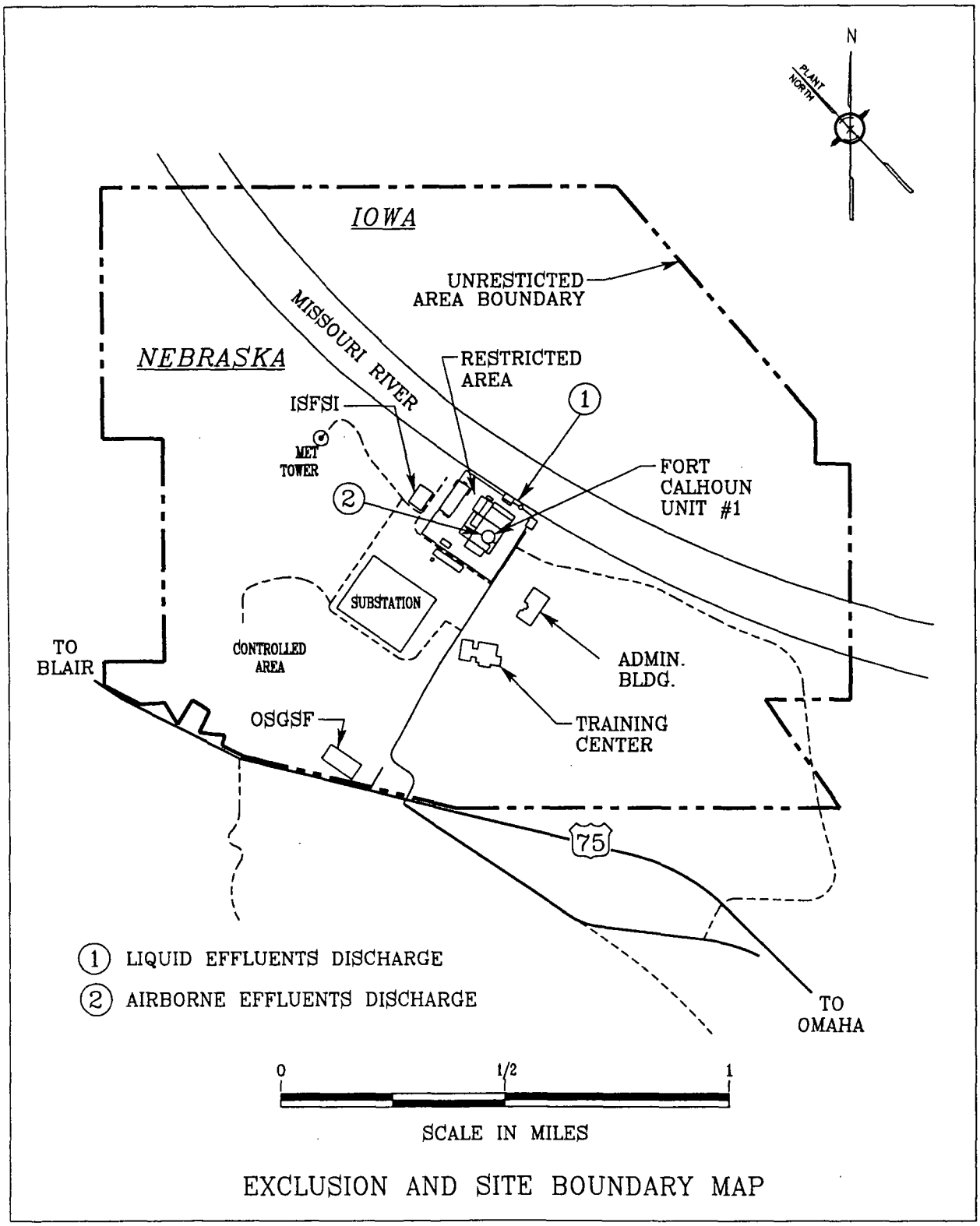

Figure 2 - Liquid Radioactive Discharge Pathways

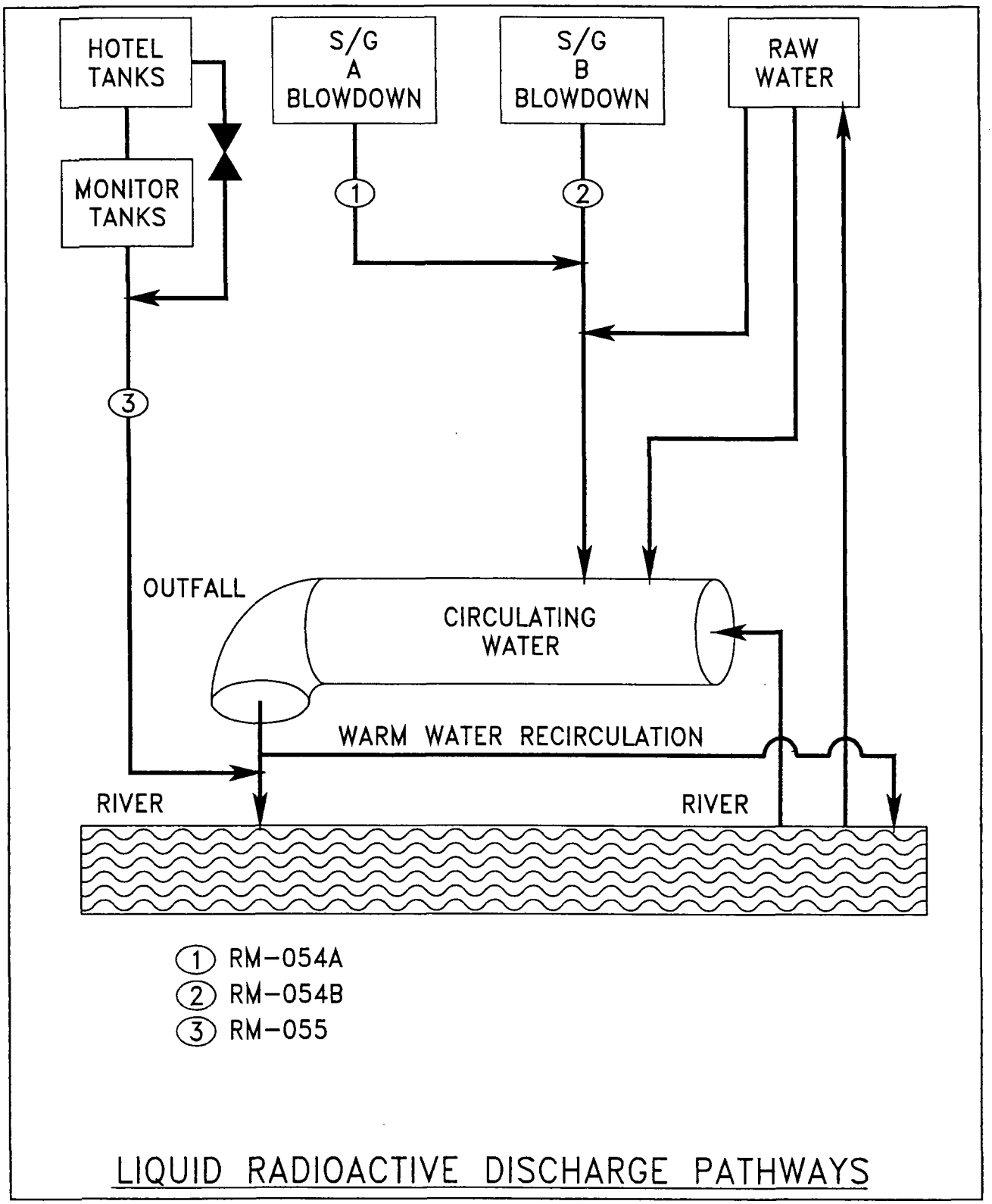

Figure 3 - Liquid Radioactive Waste Disposal System

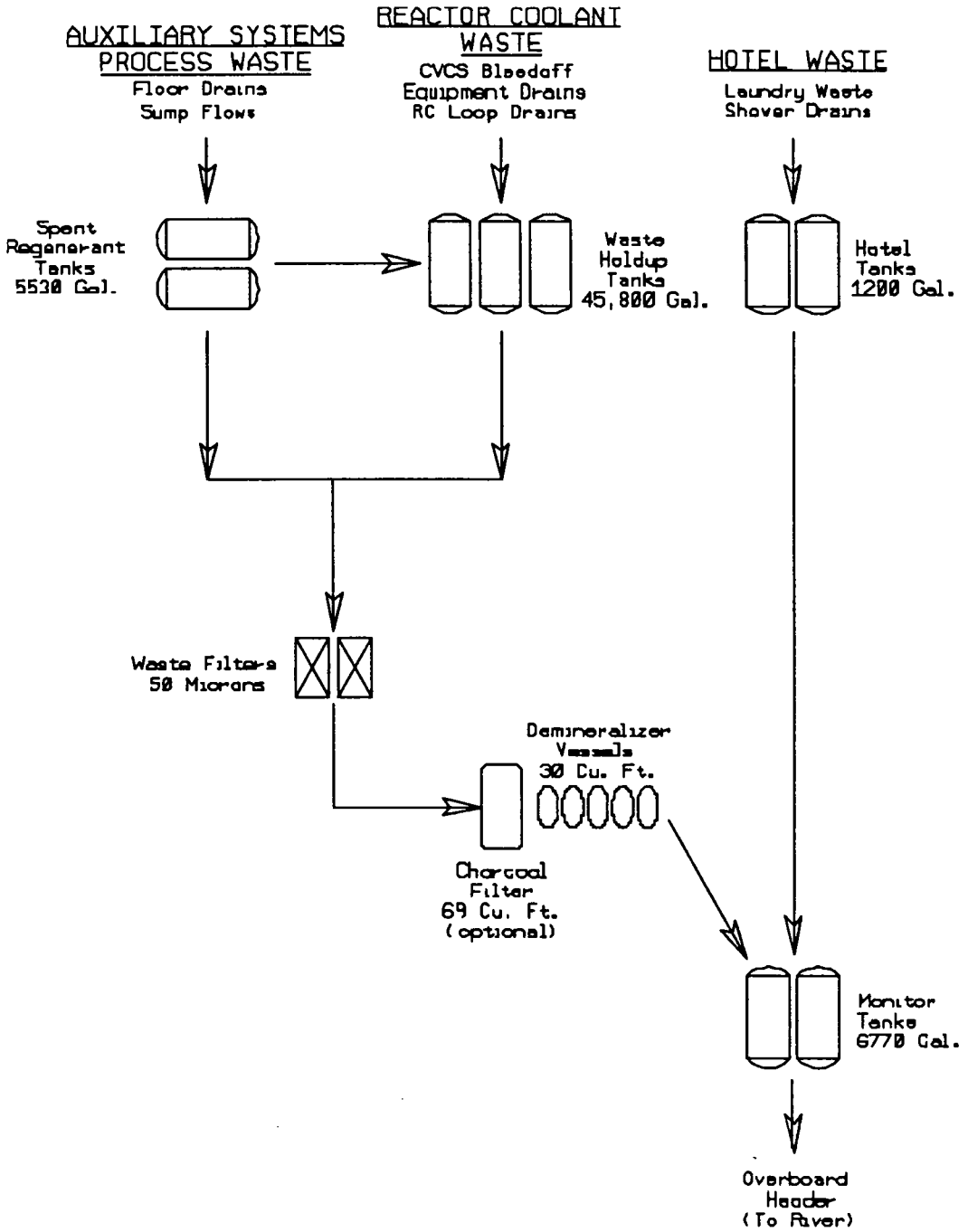

LIQUID RADIOACTIVE WASTE DISPOSAL SYSTEM

Figure 4 - Airborne Effluent Discharge Pathways

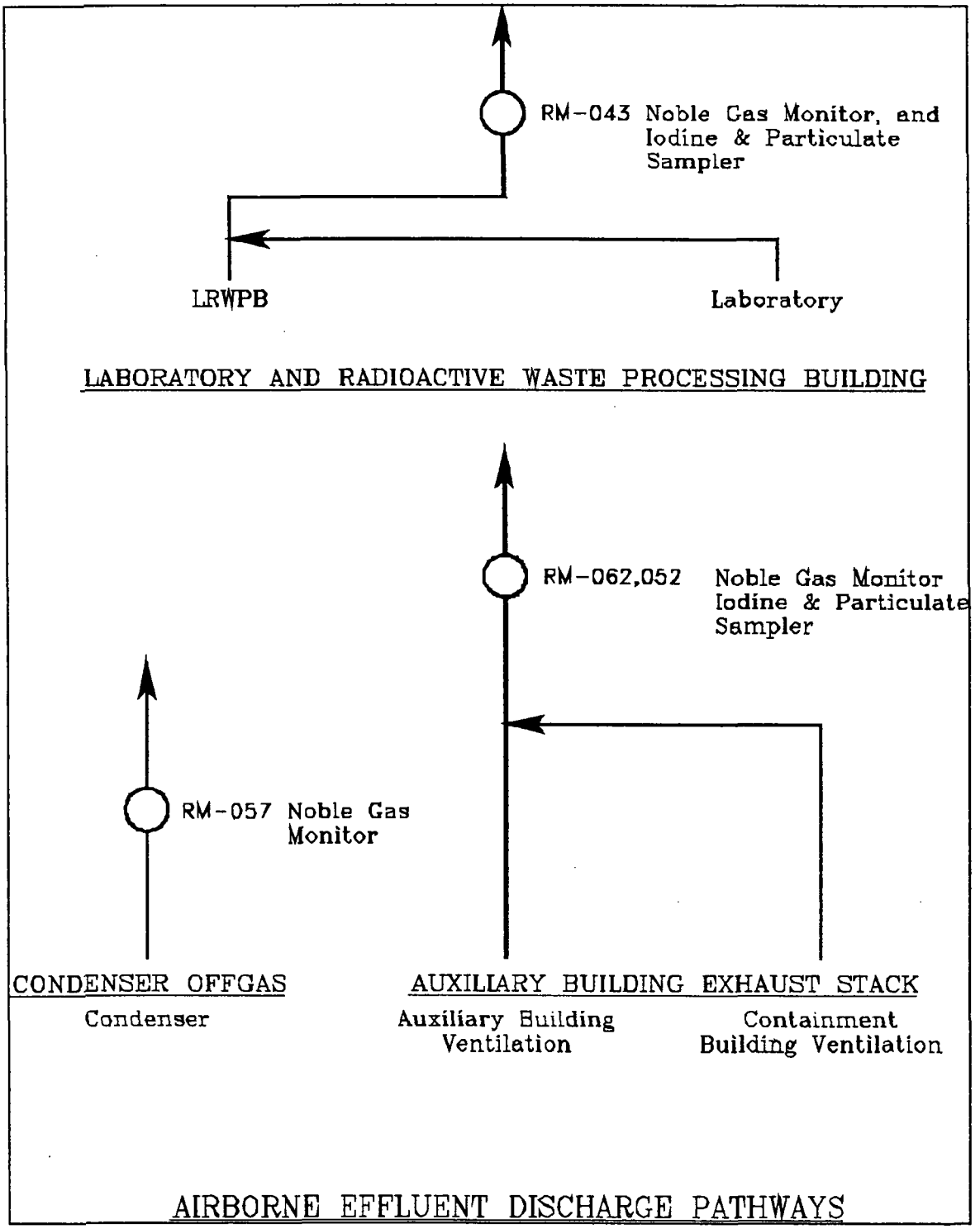

Figure 5 - Airborne Radioactive Waste Disposal System

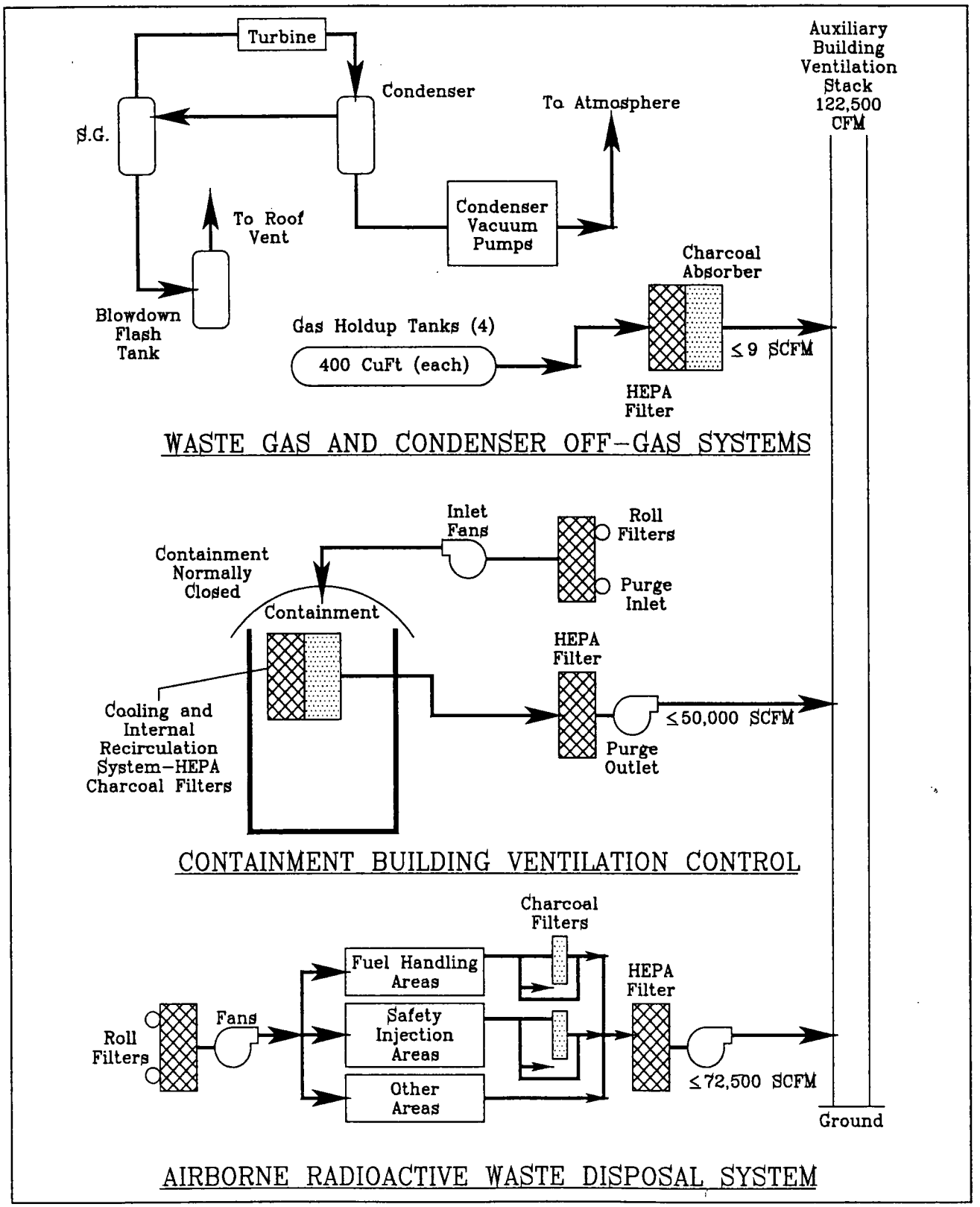

2. EFFLUENT CONCENTRATIONS

2.1 Liquid Effluent Concentrations

The concentration of radioactive material in liquid effluents (after dilution in the Circulating Water System) will be limited to the concentrations as specified in 10 CFR Part 20, Appendix B, Table 2, Column 2. For batch releases (Monitor and Hotel Waste Tanks and Steam Generators) and for continuous releases (Steam Generator Blowdown), the analyses will be performed in accordance with Part I, Table 3.1, and the concentration of each radionuclide at site discharge will be calculated, based on the following equation:

$$A_i = \frac{a_i f}{F + f}$$

$$\text{and} \sum_{i=1}^{n} \frac{A_i}{wec_i} \leq 1$$

Radionuclide concentration at site discharge:

Where:

A_i = concentration at site discharge for radionuclide (I), in μCi/ml.

a_i = concentration of radionuclide (I) in the undiluted effluent, in μCi/ml.

f = undiluted effluent flowrate, in gpm.

F = total diluted effluent flowrate in gpm.

wec_i = water effluent concentration limit for radionuclide (I) per 10 CFR Part 20, Appendix B, Table 2, Column 2.

NOTE: In addition to the above defined method, Notes 1 through 4 of 10 CFR Part 20, Appendix B, will also be applicable.

2.2 Airborne Effluent Concentrations

The concentration at the unrestricted area boundary, due to airborne effluent releases, will be limited to less than Appendix B, Table 2, Column 1, values. Radiation monitor alarm setpoints are established to ensure that these release limits are not exceeded. In the event an airborne effluent release from the station result in an alarm setpoint being exceeded, an evaluation of the unrestricted area boundary concentration resulting from the release will be performed:

To determine the concentration and air effluent concentration (aec) fraction summation at the unrestricted area boundary, the following equations will be used:

$$A_i = K_0 \, Q_i \, (\chi / Q)$$

$$\text{and} \sum_{i=1}^{n} \frac{A_i}{ECL_i} \leq 1$$

Where:

A_i = Concentration of radionuclide (I) at the unrestricted area boundary
K_0 = Constant of unit conversion. (1.0E-6 m^3/cc)
ECL_i = Effluent concentration limit (10 CFR Part 20, Appendix B, Table 2, Column 1 value for radionuclide(I))
Q_i = The release rate of radionuclide (I) in airborne effluents from all vent releases (in μCi/sec.)
(χ/Q) = Annual Average Dispersion Factor at the Unrestricted Area Boundary from ODCM Part II, Table 4

As appropriate, simultaneous releases from the Auxiliary Building Ventilation Stack, Laboratory and Radwaste Building Stack and condenser off gas will be considered in evaluating compliance with the release rate limits of 10 CFR Part 20. Monitor indications (readings) may be averaged over a time period not to exceed 15 minutes when determining noble gas release rate based on correlation of the monitor reading and monitor sensitivity. Historical annual average dispersion parameters, as presented in Table 4, may be used for evaluating the airborne effluent dose rate.

For administrative purposes, more conservative alarm setpoints than those as prescribed above may be imposed. However, conditions exceeding those more limiting alarm setpoints do not necessarily indicate radioactive material release rates exceeding 10 CFR Part 20 limits. Provided actual releases do not result in radiation monitor indications exceeding alarm setpoint values based upon the above criteria, no further analyses are required for demonstrating compliance with 10 CFR Part 20.

3. RADIOACTIVE EFFLUENT DOSE CALCULATIONS

3.1 Liquid Effluent Dose Calculations

Three pathways for human exposure to liquid releases from FCS to the Missouri River exists: 1) fish, 2) drinking water, and 3) Shoreline deposition. Fish are considered to be taken from the vicinity of the plant discharge. The drinking water for Omaha is located 19 miles downstream from FCS. The dilution factors for these pathways are derived from the Revised Environmental Report for FCS, (1974), (page 4-29 and 4-31). This report states that during Low-Low river conditions, the concentration at Omaha's water intake will be ≤14% of the concentration at discharge from FCS and will average 3%. This equates to a dilution factor of 7.14, which is used to calculate the maximum dose to an individual from liquid pathways and a dilution factor of 33.33, for calculating the average dose. All pathways combine to give the dose to an individual in unrestricted areas.

10 CFR Part 50, Appendix I restricts the dose to individuals in the unrestricted areas from radioactive materials in liquid effluents from the Fort Calhoun Station to the following limits:

- during any calendar quarter
  - ≤1.5 mrem to total body
  - ≤5.0 mrem to any organ

  and

- during any calendar year
  - ≤ 3.0 mrem to total body
  - ≤ 10.0 mrem to any organ

The following calculational methods shall be used for determining the dose or dose commitment from liquid effluents.

3.1.1 Doses from Liquid Effluent Pathways

A. Potable Water

$$R_{apj} = 1100 \frac{U_{ap} M_p}{F} \sum_{i=1}^{n} Q_i D_{aipj} \exp(-\lambda_i t_p)$$

Where:

R_{apj} = is the total annual dose to organ(j) of individuals of age group (a) from all of the radionuclides (I) in pathway (p), in mrem/yr.

U_{ap} = is a usage factor that specifies the intake rate for an individual of age group (a) associated with pathway (p), in ℓ/yr. (Table 6)

M_p = is the mixing ratio (reciprocal of the dilution factor) at the point of withdrawal of drinking water, dimensionless. (Table 17)

F = is the flow rate of the liquid effluent, in ft^3/ sec.

Q_i = is the annual release rate of radionuclide (I), in Ci/yr.

D_{aipj} = is the dose factor specific to a given age group (a), radionuclide (I), pathway (p), and organ (j) which can be used to calculate the radiation dose from an intake of a radionuclide, in mrem/pCi. (Tables 13-16)

λ_i = is the radiological decay constant of radionuclide (I), in hr^{1}.

t_p = is the average transit time required for radionuclides to reach the point of exposure. For internal dose, t_p is the total time elapsed between release of the radionuclides and ingestion of water, in hours. (Table 17)

1100 = Constant (pCi * yr * ft^3/Ci * sec * L)

3.1.1

B. Aquatic Foods

$$R_{apj} = 1100 \frac{U_{ap} M_p}{F} \sum_{i=1}^{n} Q_i B_{ip} D_{aipj} \exp(-\lambda_i t_p)$$

Where:

R_{apj} = is the total annual dose to organ (j) of individuals of age group (a) from all of the radionuclides (I) in pathway (p), in mrem/yr.

U_{ap} = is a usage factor that specifies the intake rate for an individual of age group (a) associated with pathway (p), in kg/yr. (Table 6)

M_p = is the mixing ratio (reciprocal of the dilution factor) at the point of harvest of aquatic food, dimensionless. (Table 17)

F = is the flow rate of the liquid effluent, in ft^3/sec.

Q_i = is the annual release rate of radionuclide (I), in Ci/yr.

B_{ip} = is the equilibrium bioaccumulation factor for radionuclide (I) in pathway (p) expressed as the ratio of the concentration in biota (in pCi/kg) to the radionuclide concentration in water (in pCi/liter), in (pCi/kg)/(pCi/liter). (Table 3)

D_{aipj} = is the dose factor specific to a given age group (a), radionuclide (I), pathway (p), and organ (j), which can be used to calculate the radiation dose from an intake of a radionuclide, in mrem/pCi. (Tables 13-16)

λ_i = is the radiological decay constant of radionuclide (I), in hr^{-1}.

t_p = is the average transit time required for radionuclides to reach the point of exposure. For internal dose, t_p is the total time elapsed between release of the radionuclides and ingestion of food, in hours. (Table 17)

1100 = Constant (pCi * yr * ft^3/Ci * sec * L)

3.1.1

C. Shoreline Deposits

$$R_{apj} = 110{,}000 \frac{U_{ap} M_p W}{F} \sum_{i=1}^{n} Q_i T_{ip} D_{aipj} \left[exp(-\lambda_i t_p)\right] \left[1 - exp(-\lambda_i t_b)\right]$$

Where:

R_{apj} = is the total annual dose to organ (j) of individuals of age group (a) from all of the radionuclides (I) in pathway (p), in mrem/yr.

U_{ap} = is a usage factor that specifies the exposure time for an individual of age group (a) associated with pathway (p), in hr/yr. (Table 6)

M_p = is the mixing ratio (reciprocal of the dilution factor) at the point of exposure, dimensionless. (Table 17)

W = is the shore-width factor, dimensionless. (Table 17)

F = is the flow rate of the liquid effluent, in ft^3/sec.

Q_i = is the annual release rate of radionuclide (I), in Ci/yr.

T_{ip} = is the radioactive half life of radionuclide (I), in days.

D_{aipj} = is the dose factor specific radionuclide (I) which can be used to calculate the radiation dose from exposure to a given concentration of a radionuclide in sediment, expressed as a ratio of the dose rate (in mrem/hr) and the real radionuclide concentration (in pCi/m^2). (Table 8)

λ_i = is the radiological decay constant of radionuclide (I), in hr^{-1}.

t_p = is the average transit time required for radionuclides to reach the point of exposure, in hours. (Table 17)

t_b = is the period of time for which sediment or soil is exposed to the contaminated water, in hours. (Table 17)

110,000 = Constant [(100 * pCi * yr * ft^3)/(Ci * sec * L)]

3.2 Airborne Effluent Dose Calculations

3.2.1 Noble Gas

10 CFR Part 50, Appendix I, restricts the dose to individuals in the unrestricted areas from noble gases in airborne effluents from the Fort Calhoun Station to the following limits:

- During any calendar quarter
  - ≤5 mrad-gamma air dose
  - ≤10 mrad-beta air dose

  and

- During any calendar year
  - ≤10 mrad-gamma air dose
  - ≤20 mrad-beta air dose

The following general equations shall be used to calculate the gamma-air and beta-air doses:

A. Doses from Noble Gases

1) Annual Gamma/Beta Air Dose from All Other Noble Gas Releases

$$D^{\gamma}(r,\theta) \text{ or } D^{\beta}(r,\theta) = 3.17 \times 10^{4} \sum_{i=1}^{n} Q_i \left[\chi / Q\right]^{D}(r,\theta)\,(DF_i^{\gamma} \text{ or } DF_i^{\beta})$$

Where:

$DF_i^{\gamma} DF_i^{\beta}$	=	are the gamma and beta air dose factors for a uniform semi-infinite cloud of radionuclide (I), in mrad-m^3/pCi-yr. (Table 2)
$D^{\gamma}(r,\theta)$ or $D^{\beta}(r,\theta)$	=	are the annual gamma and beta air doses at distance r, in the sector at angle θ, from the discharge point, in mrad/yr.
Q_i	=	is the annual release rate of radionuclide (I), in Ci/yr.
$[\chi/Q]^{D}(r,\theta)$	=	is the annual average gaseous dispersion factor at distance r, in the sector at angle θ, in sec/m^3. (Table 4)
3.17×10^4	=	is the number of pCi per Ci divided by the number of seconds per year.

3.2.1A

2) Annual Total Body Dose from All Other Noble Gas Releases

$$D_{\infty}^{T}(r,\theta) = S_f \sum_{i=1}^{n} X_i(r,\theta) DFB_i$$

Where:

DFB_i = is the total body dose factor for a semi-infinite cloud of the radionuclide (I), which includes the attenuation of 5 g/cm^2 of tissue, in mrem-m^3/pCi-yr. (Table 2)

$D^T_\infty(r,\theta)$ = is the annual total body dose due to immersion in a semi-infinite cloud at distance r, in the sector at angle θ, in mrem/yr.

$\chi_i(r,\theta)$ = is the annual average ground-level concentration of radionuclide (I) at distance r, in the sector at angle θ, in pCi/m^3. (Table 4)

S_f = Shielding Factor (Table 17)

3) Annual Skin Dose from All Other Noble Gas Releases

$$D_{\infty}^{T}(r,\theta) = 1.11\, S_f \sum_{i=1}^{n} X_i(r,\theta) DF_i^{\gamma} + \sum_{i=1}^{n} X_i(r,\theta) DFS_i$$

Where:

$D^T_\infty(r,\theta)$ = is the annual skin dose due to immersion in a semi-infinite cloud at distance r, in the sector at angle θ, in mrem/yr.

DFS_i = is the beta skin dose factor for a semiinfinite cloud of radionuclide (I), in mrem-m^3/pCi-yr. (Table 2)

1.11 = is the average ratio of tissue to air energy absorption coefficients.

3.2.2 Radioiodine, Tritium, and Particulates

10 CFR Part 50, Appendix I, restricts the dose to individuals in the unrestricted areas from radioactive materials in gaseous airborne from the Fort Calhoun Station to:

- During any calendar quarter
  ≤7.5 mrem to any organ

  and

- During any calendar year
  ≤15 mrem to any organ

The dose to an individual from radioiodines, radioactive materials in particulate form, and radionuclides other than noble gases with half-lives greater than 8 days in airborne effluents released to unrestricted areas should be determined by the following expressions:

Radioiodine, Tritium, and Particulates (continued)

NOTE: In all cases, for releases of tritium, use the dispersion parameter for inhalation (χ/Q).

A. Annual Organ Dose from External Irradiation from Radioactivity Deposited on the Ground Plane

The ground plane concentration of radionuclide (I) at distance r, in the sector at angle θ, with respect to the release point, may be determined by:

$$C_i^G\ (r,\theta) = \frac{[1.0x10^{12}]\,[\delta_i\,(r,\theta)Q_i]}{\lambda_i}\ [1 - exp(-\lambda_i t_b)]$$

Where:

C_I^G = is the ground plane concentration of the radionuclide (I) at distance r, in the sector at angle θ, from the release point, in pCi/m^2.

Q_i = is the annual release rate of radionuclide (I) to the atmosphere, in Ci/yr.

t_b = is the time period over which the accumulation is evaluated, which is assumed to be 15 years (mid-point of plant operating life). (Table 17)

$\delta_i(r,\theta)$ = is the annual average relative deposition of radionuclide (I) at distance r, in the sector at angle θ, considering depletion of the plume by deposition during transport, in m^{-2}. Table 4

λ_i = is the radiological decay constant for radionuclide (I), in yr^{-1}.

$1.0x10^{12}$ = is the number of pCi/Ci

3.2.2A The annual organ dose is then calculated using the following equation:

$$D_j^G\ (r,\theta) = 8760\ S_f \sum_{i=1}^{n} C_i^G\ (r,\theta) DFG_{ij}$$

Where:

$C_j^G(r,\theta)$ = is the ground plane concentration of radionuclide (i) at distance r, in the sector at angle θ, in pCi/m^2.

DFG_{ij} = is the open field ground plane dose conversion factor for organ (j) from radionuclide (i), in mrem-m^2/pCi-hr. (Table 8)

$D_j^G(r,\theta)$ = is the annual dose to the organ (j) at distance r, in the sector at angle θ, in mrem/yr.

S_f = is the shielding factor that accounts for the dose reduction due to shielding provided by residential structures during occupancy, dimensionless. (Table 17)

8760 = is the number of hours in a year

B. Annual Dose from Inhalation of Radionuclides in Air

The annual average airborne concentration of radionuclide (i) at distance r, in the sector at angle θ, with respect to the release point, may be determined as:

$$X_i\ (r,\theta) = 3.17 \times 10^4\ Q_i\ [\chi / Q]^D\ (r,\theta)$$

Where:

Q_i = is the annual release rate of radionuclide (i) to the atmosphere, in Ci/yr.

$\chi_i(r,\theta)$ = is the annual average ground-level concentration of radionuclide (i) in air at distance r, in the sector at angle θ, in pCi/m^3.

$[\chi/Q]^D\ (r,\theta)$ = is the annual average atmosphere dispersion factor, in sec/m^3 (see Reg Guide 1.111). This includes depletion (for radioiodines and particulates) and radiological decay of the plume. (Table 4)

3.17×10^4 = is the number of pCi/Ci divided by the number of sec/yr.

3.2.2B

The annual dose associated with inhalation of all radionuclides to organ (j) of an individual in age group (a), is then:

$$D_{ja}^{A}\ (r,\theta) = R_a \sum_{i=1}^{n} X_i\ (r,\theta)\ DFA_{ija}$$

Where:

$D_{ja}^{A}(r,\theta)$ = is the annual dose to organ (j) of an individual in the age group (a) at distance r, in the sector at angle θ, due to inhalation, in mrem/yr.

R_a = is the annual air intake for individuals in the age group (a), in m^3/yr. (Table 6)

DFA_{ija} = is the inhalation dose factor for radionuclide (i), organ (j), and age group (a), in mrem/pCi. (Tables 9-12)

3.2.3 Concentrations of Radionuclides in Foods and Vegetation from Atmospheric Releases

A. Parameters for Calculating Concentrations in Forage, Produce, and Leafy Vegetables, excluding Tritium

$$C_i^V\ (r,\theta) = d_i\ (r,\theta) \left[\frac{r\left[1 - exp(-\lambda_{Ei} t_e)\right]}{Y_v \lambda_{Ei}} + \frac{B_{iv}\left[1 - exp(-\lambda_i t_b)\right]}{P\lambda_i} \right] exp\,(-\lambda_i t_h)$$

Where:

$C_i^V(r,\theta)$ = is the concentration of radionuclide (i) in and on vegetation at distance r, in the sector at angle θ, in pCi/kg.

$d_i\,(r,\theta)$ = is the deposition rate of radionuclide (i) at distance r, in the sector at angle θ, in pCi/m^2 hr.

3.2.3A

The deposition rate from the plume is defined by (Reg. Guide 1.109, Rev. 1, Page 1.109-26, Equa. C-6):

$$d_i(r,\theta) = 1.1 \times 10^8 \, \delta_i \, (r,\theta) \, Q_i$$

Where:

$d_i(r,\theta)$ = is the deposition rate of radionuclide (i).

$\delta_i(r,\theta)$ = is the relative deposition of radionuclide (i), considering depletion and decay, in m^{-2} (see Reg Guide 1.111). (Table 4)

1.1×10^8 = is the number of pCi/Ci (10^{12}) divided by the number of hours per year (8760).

Q_i = is the annual release rate of radionuclide (i) to the atmosphere, in Ci/yr.

3.2.3

B. For radioiodines, the model considers only the elemental fraction of the effluent:

$$d_i(r,\theta) = 3.3 \times 10^7 \delta_i (r,\theta) Q_i$$

Where:

d_i (r, θ) = The deposition rate of radioiodine (i).
3.3×10^7 = The number of pCi/Ci (10^{12}) divided by the number of hours per year (8760), then multiplied by the amount of radioiodine emissions considered to be elemental (0.5).
δ_i (r, θ) = The relative deposition of radioiodine (i), considering depletion and decay, in m^{-2}. (Table 4)
Q_i = The total (elemental and nonelemental) radioiodine (i) emission rate.
r = is the fraction of deposited activity retained on crops, dimensionless. (Table 17)
λ_{Ei} = is the effective removal rate constant for radionuclide (i) from crops, in hr^{-1}.
$\lambda_{Ei} = \lambda_i + \lambda_w$
$\lambda_w = 0.0021/hr$. (Table 17)
t_e = is the time period that crops are exposed to contamination during the growing season, in hours. (Table 17)
Y_v = is the agricultural productivity (yield) in kg (wet weight)/m^2. (Table 17)
B_{iv} = is the concentration factor for uptake of radionuclide (i) from soil by edible parts of crops, in pCi/ kg (wet weight) per pCi/kg dry soil. (Table 5)
λ_i = is the radiological decay constant of radionuclide (I), in hr^{-1}
t_b = is the period of time for which sediment or soil is exposed to the contaminated water, in hours (mid-point of plant life). (Table 17)
P = is the effective "surface density" for soil, in kg (dry soil)/m^2. (Table 17)
t_h = is the holdup time that represents the time interval between harvest and consumption of the food, in hours. (Table 17)

Different values for the parameters t_e, Y_v, and t_h, may be used to allow the use of the Equation for different purposes: estimating concentrations in produce consumed by man; in leafy vegetables consumed by man; in forage consumed directly as pasture grass by dairy cows, beef cattle, or goats; and in forage consumed as stored feed by dairy cows, beef cattle or goats. See Table 17.

3.2.3

C. Parameters for Calculating the Concentration of Radionuclide (i) in the Animal's Feed (Milk Cow, Beef Cow, and Goat)

$$C_i^V\ (r,\theta) = f_p f_s C_i^P\ (r,\theta) + (1-f_p)\ C_i^S\ (r,\theta) + f_p\ (1-f_s)\ C_i^S\ (r,\theta)$$

Where:

$C_i^V(r,\theta)$ = is the concentration of radionuclide (i) in the animal's feed, in pCi/kg.

$C_i^P(r,\theta)$ = is the concentration of radionuclide (i) on pasture grass (calculated using Equation 3.2.3C with t_h=0), in pCi/kg.

$C_i^S(r,\theta)$ = is the concentration of radionuclide (i) in stored feeds (calculated using Equation 3.2.3C with t_h=90 days), in pCi/kg.

f_p = is the fraction of the year that animals graze on pasture. (Table 17)

f_s = is the fraction of daily feed that is pasture grass while the animal grazes on pasture. (Table 17)

3.2.4 Parameters for Calculating Radionuclide Concentration in Cow and Goat Milk

$$C_i^M\ (r,\theta) = F_m C_i^V\ (r,\theta)\ Q_F\ exp(-\lambda_i t_f)$$

Where:

$C_i^M(r,\theta)$ = is the concentration of radionuclide (i) in milk, in pCi/liter.

$C_i^V(r,\theta)$ = is the concentration of radionuclide (i) in the animal's feed, in pCi/kg.

F_m = is the average fraction of the animal's daily intake of radionuclide (i) which appears in each liter of milk, in days/liter. (Table 5)

Q_F = is the amount of feed consumed by the animal per day, in kg/day. (Table 7)

t_f = is the average transport time of the radionuclide (i) from the feed to the milk and to the receptor (a value of 2 days is assumed). (Table 17)

λ_i = is the radiological decay constant of radionuclide (i), in days^{-1}.

3.2.5 Parameters for Calculating Radionuclide Concentration in Cow Meat, excluding Tritium

$$C_i^F\ (r,\theta) = F_f C_i^V\ (r,\theta)\ Q_F\ exp\ (-\lambda_i t_f)$$

Where:

$C_i^F\ (r,\theta)$ = is the concentration of radionuclide (i) in meat, in pCi/liter.

F_f = is the average fraction of the animal's daily intake of radionuclide (i) which appears in each kilogram of flesh, in days/kilogram. (Table 5)

t_s = is the average time from slaughter to consumption. (Table 17)

3.2.6 Parameters for Calculating Tritium Concentrations in Vegetation

The concentration of tritium in vegetation is calculated from its concentration in the air surrounding the vegetation.

$$C_T^V\ (r,\theta) = 3.17 \times 10^7\ Q_T \frac{[\chi / Q]\ (r,\theta)\ (0.75)\ (0.5)}{H} = 1.2 \times 10^7\ Q_T \frac{[\chi / Q]\ (r,\theta)}{H}$$

Where:

$C_T^V(r, \theta)$ = is the concentration of tritium in vegetation grown at distance r, in the sector at angle θ, in pCi/kg.

H = is the absolute humidity of the atmosphere at distance r, in the sector at angle θ, in g/m^3. H=8 gm/kg.

Q_T = is the annual release rate of tritium, in Ci/yr.

$[\chi/Q](r,\theta)$ = is the atmospheric dispersion factor, in sec/m^3. (Table 4)

0.5 = is the ratio of tritium concentration in plant water to tritium concentration in atmospheric water, dimensionless.

0.75 = is the fraction of total plant mass that is water, dimensionless.

3.2.7 Annual Dose from Atmospherically Released Radionuclides in Foods

A. The total annual dose to organ (j) of an individual in age group (a) resulting from ingestion of all radionuclides in produce, milk, and leafy vegetables is given by:

$$D_{ja}^{D}(r,\theta) = \sum_{i} DFI_{ija}\left[U_a^V f_g C_i^V(r,\theta) + U_a^M C_i^M(r,\theta) + U_a^F C_i^F(r,\theta) + U_a^L f_\ell C_i^L(r,\theta)\right]$$

Where:

$D_{ja}^{D}(r,\theta)$ = is the annual dose to organ (j) of an individual in age group (a) from dietary intake of atmospherically released radionuclides, in mrem/yr.

DFI_{ija} = is the dose conversion factor for the ingestion of radionuclide (i), organ (j), and age group (a), in mrem/pCi. Tables13-16.

U_a^V, U_a^M = are the ingestion rates of produce (non-leafy vegetables, fruits, and grains); milk, meat, and leafy U_a^F, U_a^L vegetables, respectively for individuals in age group (a). (Table 6)

f_g = Fraction of ingested produce grown in garden of interest (Table 17)

f_l = Fraction of leafy vegetables grown in garden of interest (Table 17)

B. Calculating the Ingested Dose from Leafy and Non-Leafy (produce) Vegetation for Radionuclide (i) to Each Organ (j) and Age Group (a)

$$D_{ja}^{D}(r,\theta) = DFI_{ija}\left[U_a^L f_\ell C_i^L(r,\theta) + U_a^V f_g C_i^V(r,\theta)\right]$$

Where:

$D_{ja}^{D}(r,\theta)$ = is the annual dose from the ingestion of radionuclide (i) to organ (j) of an individual in age group (a) from dietary intake of atmospherically released radionuclides in vegetation, in mrem/yr.

DFI_{ija} = is the dose conversion factor for the ingestion of radionuclide (i), organ (j), and age group (a), in mrem/pci. Tables 13-16

U_a^L, U_a^V = are the ingestion rates of leafy vegetables and produce (non-leafy vegetables, fruits, and grains), for individuals in age group (a), in kg/yr. (Table 6)

C_i^L = is the concentration of radionuclide (i) in and on leafy vegetation, in pCi/kg.

C_i^V = is the concentration of radionuclide (i) in and on produce, in pCi/kg.

3.2.7

C. Calculation Determining the Ingested Dose from Cow Milk for Radionuclide (i), Organ (j), and Age Group (a)

$$D_{ja}^{D}\ (r,\theta) = DFI_{ija}\left[U_a^M\ C_i^M\ (r,\theta)\right]$$

Where:

$D_{ja}^{D}(r,\theta)$ = is the annual dose from the ingestion of radionuclide (i), organ (j) of an individual in age group (a) from dietary intake of atmospherically released radionuclides in cow milk, in mrem/yr.

DFI_{ija} = is the dose conversion factor for the ingestion of radionuclide (i), organ (j), and age group (a), in mrem/pCi. (Tables 13-16)

U_a^M = is the ingestion rate of cow milk for individuals in age group (a), in ℓ/yr. (Table 6)

C_i^M = is the radionuclide concentration in cow milk, in pCi/kg. Equation 3.2.4

D. Calculation Determining the Ingested Dose from Meat for Radionuclide (i) to Organ (j) and Age Group (a)

$$D_{ja}^{D}\ (r,\theta) = DFI_{ija}\left[U_a^F\ C_i^F\ (r,\theta)\right]$$

Where:

$D_{ja}^{d}(r,\theta)$ = is the annual dose from the ingestion of radionuclide (i), organ (j) of an individual in age group (a) from dietary intake of atmospherically released radionuclides in meat, in mrem/yr.

DFI_{ija} = is the dose conversion factor for the ingestion of radionuclide (i), organ (j), and age group (a), in mrem/pCi. (Tables 13-16)

U_a^F = is the ingestion rate of meat for individuals in age group (a), in kg/yr. (Table 6)

C_i^F = is the radionuclide (i) concentration in meat, in pCi/kg.

4. LOWER LIMIT OF DETECTION (LLD)

The lower limit of detection (LLD) for liquid and airborne effluent discharges and environmental samples referenced in Part I, Tables 3.1, 3.2, and 4.3 is defined as the smallest concentration of radioactive material in a sample that will yield a net count, above system background, that will be detected with 95 percent probability with only 5 percent probability of falsely concluding that a blank observation represents a "real" signal.

For a particular measurement system, which may include radiochemical separation:

$$LLD = \frac{4.66 * S_b}{E * V * D * Y * exp(-\lambda \Delta t)}$$

Where:

LLD = the lower limit of detection as defined above, in either picoCuries or microCuries, per unit mass or volume as a function of the value of D

Sb = the standard deviation of the background counting rate or of the counting rate of a blank sample, as appropriate, as counts per minute

E = the counting efficiency, as counts per disintegration

V = the sample size in units of mass or volume

D = 2.22E+06 of disintegrations per minute per microCurie or 2.22 disintegrations per minute per picoCurie

Y = the fractional radiochemical yield, when applicable

λ = the radioactive decay constant for the particular radionuclide

Δt = the elapsed time between the midpoint of sample collection and time of counting

Appropriate values of E, V, Y, and Δt should be used in the calculation.

It should be recognized that the LLD is defined as an A Priori limit representing the capability of a measurement system and not as a limit for a particular measurement.

LLD verifications will be performed on a periodic basis. This determination is to ensure that the counting system is able to detect levels of radiation at the LLD values for the specific type of analysis required. They will be performed with a blank (non-radioactive) sample in the same counting geometry as the actual sample.

Table 2 - Dose Factors for Exposure to a Semi-Infinite Cloud of Noble Gases

Nuclide	β-Air[1] (Df_i^{β})	β-Skin[2] (DFS_i)	γ-Air[1] (Df_i^{γ})	γ-Body[2] (DFB_i)
Kr-83m	2.88E-04	---	1.93E-05	7.56E-08
Kr-85m	1.97E-03	1.46E-03	1.23E-03	1.17E-03
Kr-85	1.95E-03	1.34E-03	1.72E-05	1.61E-05
Kr-87	1.03E-02	9.73E-03	6.17E-03	5.92E-03
Kr-88	2.93E-03	2.37E-03	1.52E-02	1.47E-02
Kr-89	1.06E-02	1.01E-02	1.73E-02	1.66E-02
Kr-90	7.83E-03	7.29E-03	1.63E-02	1.56E-02
Xe-131m	1.11E-03	4.67E-04	1.56E-04	9.15E-05
Xe-133m	1.48E-03	9.94E-04	3.27E-04	2.51E-04
Xe-133	1.05E-03	3.06E-04	3.53E-04	2.94E-04
Xe-135m	7.39E-04	7.11E-04	3.36E-03	3.12E-03
Xe-135	2.46E-03	1.86E-03	1.92E-03	1.81E-03
Xe-137	1.27E-02	1.22E-02	1.51E-03	1.42E-03
Xe-138	4.75E-03	4.13E-03	9.21E-03	8.83E-03
Ar-41	3.28E-03	2.69E-03	9.30E-03	8.84E-03

1 $\frac{mrad - m^3}{pCi - yr}$

2 $\frac{mrem - m^3}{pCi - r}$

3 $2.88E-04 = 2.88 \times 10^{-4}$

Table 3 - Bioaccumulation Factors
(pCi/kg per pCi/liter)

FRESHWATER

Element	Fish	Invertebrate
H	9.0E-01	9.0E-01
C	4.6E+03	9.1E+03
Na	1.0E+02	2.0E+02
P	1.0E+05	2.0E+04
Cr	2.0E+02	2.0E+03
Mn	4.0E+02	9.0E+04
Fe	1.0E+02	3.2E+03
Co	5.0E+01	2.0E+02
Ni	1.0E+02	1.0E+02
Cu	5.0E+01	4.0E+02
Zn	2.0E+03	1.0E+04
Br	4.2E+02	3.3E+02
Rb	2.0E+03	1.0E+03
Sr	3.0E+01	1.0E+02
Y	2.5E+01	1.0E+03
Zr	3.3E+00	6.7E+00
Nb	3.0E+04	1.0E+02
Mo	1.0E+01	1.0E+01
Tc	1.5E+01	5.0E+00
Ru	1.0E+01	3.0E+02
Rh	1.0E+01	3.0E+02
Te	4.0E+02	6.1E+03
I	1.5E+01	5.0E+00
Cs	2.0E+03	1.0E+03
Ba	4.0E+00	2.0E+02
La	2.5E+01	1.0E+03
Ce	1.0E+00	1.0E+03
Pr	2.5E+01	1.0E+03
Nd	2.5E+01	1.0E+03
W	1.2E+03	1.0E+01
Np	1.0E+01	4.0E+02

Table 4 - Highest Potential Exposure Pathways for Estimating Dose

NOTE: The Annual Radiological Effluent Report uses the highest calculated value from real time meteorological data obtained for the entire year for calculating dose.

Exposure Pathway	**Location** [2]	**Direction** [2]	**Distance from Containment (miles)** [2]	**X/Q** [1] **{χ/Q (r,θ)} (sec/m^3)**	**D/Q** [1] **{δ (r,θ)} (m^{-2})**
Direct Exposure	Site Boundary	WNW	0.70	1.30E-05	N/A
Inhalation	Site Boundary	WNW	0.70	1.30E-05	N/A
Ingestion	Residence	SSE	0.65	N/A	7.6E-08

1 These values are used for calculating quarterly dose estimates during the annual reporting period and are based on a 2 year average, updated only upon a +10% change from the previous value. At least ten percent (10%) should be added to these values for dose estimates during the reporting periods.

2 The location is subject to change based on an annual evaluation and is utilized only for ingestion exposure pathway dose estimates. This location may differ from the highest ingestion exposure pathway for offsite air monitoring locations as determined by the Land Use Survey performed biennially in accordance with Part 1, Section 6.3.2.

Table 5 - Stable Element Transfer Data

Element	B_{iv} Veg./Soil	F_m (cow) Milk (d/l)	F_f Meat (d/kg)
H	4.8E+00	1.0E-02	1.2E-02
C	5.5E+00	1.2E-02	3.1E-02
Na	5.2E-02	4.0E-02	3.0E-02
P	1.1E+00	2.5E-02	4.6E-02
Cr	2.5E-04	2.2E-03	2.4E-03
Mn	2.9E-02	2.5E-04	8.0E-04
Fe	6.6E-04	1.2E-03	4.0E-02
Co	9.4E-03	1.0E-03	1.3E-02
Ni	1.9E-02	6.7E-03	5.3E-02
Cu	1.2E-01	1.4E-02	8.0E-03
Zn	4.0E-01	3.9E-02	3.0E-02
Rb	1.3E-01	3.0E-02	3.1E-02
Sr	1.7E-02	8.0E-04	6.0E-04
Y	2.6E-03	1.0E-05	4.6E-03
Zr	1.7E-04	5.0E-06	3.4E-02
Nb	9.4E-03	2.5E-03	2.8E-01
Mo	1.2E-01	7.5E-03	8.0E-03
Tc	2.5E-01	2.5E-02	4.0E-01
Ru	5.0E-02	1.0E-06	4.0E-01
Rh	1.3E+1	1.0E-02	1.5E-03
Ag	1.5E-01	5.0E-02	1.7E-02
Te	1.3E+00	1.0E-03	7.7E-02
I	2.0E-02	6.0E-03	2.9E-03
Cs	1.0E-02	1.2E-02	4.0E-03
Ba	5.0E-03	4.0E-04	3.2E-03
La	2.5E-03	5.0E-06	2.0E-04
Ce	2.5E-03	1.0E-04	1.2E-03
Pr	2.5E-03	5.0E-06	4.7E-03
Nd	2.4E-03	5.0E-06	3.3E-03
W	1.8E-02	5.0E-04	1.3E-03
Np	2.5E-03	5.0E-06	2.0E-04

Table 6 - Recommended Values for U_{ap} to Be Used for the Maximum Exposed Individual in Lieu of Site Specific Data

Pathway	Infant	Child	Teen	Adult
Fruits, vegetables, & grain (kg/yr)	---	520	630	520
Leafy vegetables (kg/yr)	---	26	42	64
Milk (ℓ/yr)	330	330	400	310
Meat & poultry (kg/yr)	---	41	65	110
Fish (fresh or salt)(kg/yr)	---	6.9	16	21
Other Seafood (kg/yr)	---	1.7	3.8	5
Drinking water (ℓ/yr)	330	510	510	730
Shoreline recreation (hr/yr)	---	14	67	12
Inhalation (m^3/yr)	1400	3700	8000	8000

Table 7 - Animal Consumption Rates

Animal	Q_F Feed or Forage [Kg/day (wet weigh)]	Q_{AW} Water (ℓ/day)
Milk Cow	50	60
Beef Cattle	50	50
Goats	6	8

Table 8 - External Dose Factors for Standing on Contaminated Ground
(mrem/hr per pCi/m^2)

ELEMENT	TOTAL BODY	SKIN
H-3	---	---
C-14	---	---
Na-24	2.50E-08	2.90E-08
P-32	---	---
Cr-51	2.20E-10	2.60E-10
Mn-54	5.80E-09	6.80E-09
Mn-56	1.10E-08	1.30E-08
Fe-55	---	---
Fe-59	8.00E-09	9.40E-09
Co-58	7.00E-09	8.20E-09
Co-60	1.70E-08	2.00E-08
Ni-63	---	---
Nr-65	3.70E-09	4.30E-09
Cu-64	1.50E-09	1.70E-09
Zn-65	4.00E-09	4.60E-09
Zn-69	---	---
Br-83	6.40E-11	9.30E-11
Br-84	1.20E-08	1.40E-08
Br-85	---	---
Rb-86	6.30E-10	7.20E-10
Rb-88	3.50E-09	4.00E-09
Rb-89	1.50E-08	1.80E-08
Sr-89	5.60E-13	6.50E-13
Sr-91	7.10E-09	8.30E-09
Sr-92	9.00E-09	1.00E-08
Y-90	2.20E-12	2.60E-12
Y-91M	3.80E-09	4.40E-09
Y-91	2.40E-11	2.70E-11
Y-92	1.60E-09	1.90E-09
Y-93	5.70E-10	7.80E-10
Zr-95	5.00E-09	5.80E-09
Zr-97	5.50E-09	6.40E-09
Nb-95	5.10E-09	6.00E-09
Mo-99	1.90E-09	2.20E-09
Tc-99M	9.60E-10	1.10E-09
Tc-101	2.70E-09	3.00E-09
Ru-103	3.60E-09	4.20E-09
Ru-105	4.50E-09	5.10E-09

Table 8 - External Dose Factors for Standing on Contaminated Ground
(mrem/hr per pCi/m^2)

ELEMENT	TOTAL BODY	SKIN
Ru-106	1.50E-09	1.80E-09
Ag-110M	1.80E-08	2.10E-08
Te-125M	3.50E-11	4.80E-11
Te-127M	1.10E-12	1.30E-12
Te-127	1.00E-11	1.10E-11
Te-129M	7.70E-10	9.00E-10
Te-129	7.10E-10	8.40E-10
Te-131M	8.40E-09	9.90E-09
Te-131	2.20E-09	2.60E-06
Te-132	1.70E-09	2.00E-09
I-130	1.40E-08	1.70E-08
I-131	2.80E-09	3.40E-09
I-132	1.70E-08	2.00E-08
I-133	3.70E-09	4.50E-09
I-134	1.60E-08	1.90E-08
I-135	1.20E-08	1.40E-08
Cs-134	1.20E-08	1.40E-08
Cs-136	1.50E-08	1.70E-08
Cs-137	4.20E-09	4.90E-09
Cs-138	2.10E-08	2.40E-08
Ba-139	2.40E-09	2.70E-09
Ba-140	2.10E-09	2.40E-09
Ba-141	4.30E-09	4.90E-09
Ba-142	7.90E-09	9.00E-09
La-140	1.50E-08	1.70E-08
La-142	1.50E-08	1.80E-08
Ce-141	5.50E-10	6.20E-10
Ce-143	2.20E-09	2.50E-09
Ce-144	3.20E-10	3.70E-10
Pr-143	---	---
Pr-144	2.00E-10	2.30E-10
Nd-147	1.00E-09	1.20E-09
W-187	3.10E-09	3.60E-09
Np-239	9.50E-10	1.10E-09

Table 9 - Inhalation Dose Factors for Adult
(mrem per pCi Inhaled)

Nuclide	Bone	Liver	T. Body	Thyroid	Kidney	Lung	GI-LLI
H-3	---	8.98E-08	8.98E-08	8.98E-08	8.98E-08	8.98E-08	8.98E-08
C-14	2.27E-06	4.26E-07	4.26E-07	4.26E-07	4.26E-07	4.26E-07	4.26E-07
Na-24	1.28E-06	1.28E-06	1.28E-06	1.28E-06	1.28E-06	1.28E-06	1.28E-06
P-32	1.65E-04	9.64E-06	6.26E-06	---	---	---	1.08E-05
Cr-51	---	---	1.25E-08	7.44E-09	2.85E-09	1.80E-06	4.15E-07
Mn-54	---	4.95E-06	7.87E-07	---	1.23E-06	1.75E-04	9.67E-06
Mn-56	---	1.55E-10	2.29E-11	---	1.63E-10	1.18E-06	2.53E-06
Fe-55	3.07E-06	2.12E-06	4.93E-07	---	---	9.01E-06	7.54E-07
Fe-59	1.47E-06	3.47E-06	1.32E-06	---	---	1.27E-04	2.35E-05
Co-58	---	1.98E-07	2.59E-07	---	---	1.16E-04	1.33E-05
Co-60	---	1.44E-06	1.85E-06	---	---	7.46E-04	3.56E-05
Ni-63	5.40E-05	3.93E-06	1.81E-06	---	---	2.23E-05	1.67E-06
Ni-65	1.92E-10	2.62E-11	1.14E-11	---	---	7.00E-07	1.54E-06
Cu-64	---	1.83E-10	7.69E-11	---	5.78E-10	8.48E-07	6.12E-06
Zn-65	4.05E-06	1.29E-05	5.82E-06	---	8.62E-06	1.08E-04	6.68E-06
Zn-69	4.23E-12	8.14E-12	5.65E-13	---	5.27E-12	1.15E-07	2.04E-09
Br-83	---	---	3.01E-08	---	---	---	2.90E-08
Br-84	---	---	3.91E-08	---	---	---	2.05E-13
Br-85	---	---	1.60E-09	---	---	---	---
Rb-86	---	1.69E-05	7.37E-06	---	---	---	2.08E-06
Rb-88	---	4.84E-08	2.41E-08	---	---	---	4.18E-19
Rb-89	---	3.20E-08	2.12E-08	---	---	---	1.16E-21
Sr-89	3.80E-05	---	1.09E-06	---	---	1.75E-04	4.37E-05
Sr-90	3.59E-03	---	7.21E-05	---	---	1.20E-03	9.02E-05
Sr-91	7.74E-09	---	3.13E-10	---	---	4.56E-06	2.39E-05
Sr-92	8.43E-10	---	3.64E-11	---	---	2.06E-06	5.38E-06
Y-90	2.61E-07	---	7.01E-09	---	---	2.12E-05	6.32E-05
Y-91M	3.26E-11	---	1.27E-12	---	---	2.40E-07	1.66E-10
Y-91	5.78E-05	---	1.55E-06	---	---	2.13E-04	4.81E-05
Y-92	1.29E-09	---	3.77E-11	---	---	1.96E-06	9.19E-06
Y-93	1.18E-08	---	3.26E-10	---	---	6.06E-06	5.27E-05
Zr-95	1.34E-05	4.30E-06	2.91E-06	---	6.77E-06	2.21E-04	1.88E-05
Zr-97	1.21E-08	2.45E-09	1.13E-09	---	3.71E-09	9.84E-06	6.54E-05
Nb-95	1.76E-06	9.77E-07	5.26E-07	---	9.67E-07	6.31E-05	1.30E-05
Mo-99	---	1.51E-08	2.87E-09	---	3.64E-08	1.14E-05	3.10E-05
Tc-99M	1.29E-13	3.64E-13	4.63E-12	---	5.52E-12	9.55E-08	5.20E-07

Table 9 - Inhalation Dose Factors for Adult
(mrem per pCi Inhaled)

Nuclide	Bone	Liver	T. Body	Thyroid	Kidney	Lung	GI-LLI
Tc-101	5.22E-15	7.52E-15	7.38E-14	---	1.35E-13	4.99E-08	1.36E-21
Ru-103	1.91E-07	---	8.23E-08	---	7.29E-07	6.31E-05	1.38E-05
Ru-105	9.88E-11	---	3.89E-11	---	1.27E-10	1.37E-06	6.02E-06
Ru-106	8.64E-06	---	1.09E-06	---	1.67E-05	1.17E-03	1.14E-04
Ag-110M	1.35E-06	1.25E-06	7.43E-07	---	2.46E-06	5.79E-04	3.78E-05
Te-125M	4.27E-07	1.98E-07	5.84E-08	1.31E-07	1.55E-06	3.92E-05	8.83E-06
Te-127M	1.58E-06	7.21E-07	1.96E-07	4.11E-07	5.72E-06	1.20E-04	1.87E-05
Te-127	1.75E-10	8.03E-11	3.87E-11	1.32E-10	6.37E-10	8.14E-07	7.17E-06
Te-129M	1.22E-06	5.84E-07	1.98E-07	4.30E-07	4.57E-06	1.45E-04	4.79E-05
Te-129	6.22E-12	2.99E-12	1.55E-12	4.87E-12	2.34E-11	2.42E-07	1.96E-08
Te-131M	8.74E-09	5.45E-09	3.63E-09	6.88E-09	3.86E-08	1.82E-05	6.95E-05
Te-131	1.39E-12	7.44E-13	4.49E-13	1.17E-12	5.46E-12	1.74E-07	2.30E-09
Te-132	3.25E-08	2.69E-08	2.02E-08	2.37E-08	1.82E-07	3.60E-05	6.37E-05
I-130	5.72E-07	1.68E-06	6.60E-07	1.42E-04	2.61E-06	---	9.61E-07
I-131	3.15E-06	4.47E-06	2.56E-06	1.49E-03	7.66E-06	---	7.85E-07
I-132	1.45E-07	4.07E-07	1.45E-07	1.43E-05	6.48E-07	---	5.08E-08
I-133	1.08E-06	1.85E-06	5.65E-07	2.69E-04	3.23E-06	---	1.11E-06
I-134	8.05E-08	2.16E-07	7.69E-08	3.73E-06	3.44E-07	---	1.26E-10
I-135	3.35E-07	8.73E-07	3.21E-07	5.60E-05	1.39E-06	---	6.56E-07
Cs-134	4.66E-05	1.06E-04	9.10E-05	---	3.59E-05	1.22E-05	1.30E-06
Cs-136	4.88E-06	1.83E-05	1.38E-05	---	1.07E-05	1.50E-06	1.46E-06
Cs-137	5.98E-05	7.76E-05	5.35E-05	---	2.78E-05	9.40E-06	1.05E-06
Cs-138	4.14E-08	7.76E-08	4.05E-08	---	6.00E-08	6.07E-09	2.33E-13
Ba-139	1.17E-10	8.32E-14	3.42E-12	---	7.78E-14	4.70E-07	1.12E-07
Ba-140	4.88E-06	6.13E-09	3.21E-07	---	2.09E-09	1.59E-04	2.73E-05
Ba-141	1.25E-11	9.41E-15	4.20E-13	---	8.75E-15	2.42E-07	1.45E-17
Ba-142	3.29E-12	3.38E-15	2.07E-13	---	2.86E-15	1.49E-07	1.96E-26
La-140	4.30E-08	2.17E-08	5.73E-09	---	---	1.70E-05	5.73E-05
La-142	8.54E-11	3.88E-11	9.65E-12	---	---	7.91E-07	2.64E-07
Ce-141	2.49E-06	1.69E-06	1.91E-07	---	7.83E-07	4.52E-05	1.50E-05
Ce-143	2.33E-08	1.72E-08	1.91E-09	---	7.60E-09	9.97E-06	2.83E-05
Ce-144	4.29E-04	1.79E-04	2.30E-05	---	1.06E-04	9.72E-04	1.02E-04
Pr-143	1.17E-06	4.69E-07	5.80E-08	---	2.70E-07	3.51E-05	2.50E-05
Pr-144	3.76E-12	1.56E-12	1.91E-13	---	8.81E-13	1.27E-07	2.69E-18
Nd-147	6.59E-07	7.62E-07	4.56E-08	---	4.45E-07	2.76E-05	2.16E-05
W-187	1.06E-09	8.85E-10	3.10E-10	---	---	3.63E-06	1.94E-05
Np-239	2.87E-08	2.54E-08	1.55E-09	---	8.75E-09	4.70E-06	1.49E-05

Table 10 - Inhalation Dose Factors for Teenager
(mrem per pCi Inhaled)

Nuclide	Bone	Liver	T. Body	Thyroid	Kidney	Lung	GI-LLI
H-3	---	9.06E-08	9.06E-08	9.06E-08	9.06E-08	9.06E-08	9.06E-08
C-14	3.25E-06	6.09E-07	6.09E-07	6.09E-07	6.019E-07	6.09E-07	6.09E-07
Na-24	1.72E-06	1.72E-06	1.72E-06	1.72E-06	1.72E-06	1.72E-06	1.72E-06
P-32	2.36E-04	1.37E-05	8.95E-06	---	---	---	1.16E-05
Cr-51	---	---	1.69E-08	9.37E-09	3.84E-09	2.62E-06	3.75E-07
Mn-54	---	6.39E-06	1.05E-06	---	1.59E-06	2.48E-04	8.35E-06
Mn-56	---	2.12E-10	3.15E-11	---	2.24E-10	1.90E-06	7.18E-06
Fe-55	4.18E-06	2.98E-06	6.93E-07	---	---	1.55E-05	7.99E-07
Fe-59	1.99E-06	4.62E-06	1.79E-06	---	---	1.91E-04	2.23E-05
Co-58	---	2.59E-07	3.47E-07	---	---	1.68E-04	1.19E-05
Co-60	---	1.89E-06	2.48E-06	---	---	1.09E-03	3.24E-05
Ni-63	7.25E-05	5.43E-06	2.47E-06	---	---	3.84E-05	1.77E-06
Ni-65	2.73E-10	3.66E-11	1.59E-11	---	---	1.17E-06	4.59E-06
Cu-64	---	2.54E-10	1.06E-10	---	8.01E-10	1.39E-06	7.68E-06
Zn-65	4.82E-06	1.67E-05	7.80E-06	---	1.08E-05	1.55E-04	5.83E-06
Zn-69	6.04E-12	1.15E-11	8.07E-13	---	7.53E-12	1.98E-07	3.56E-08
Br-83	---	---	4.30E-08	---	---	---	---
Br-84	---	---	5.41E-08	---	---	---	---
Br-85	---	---	2.29E-09	---	---	---	---
Rb-86	---	2.38E-05	1.05E-05	---	---	---	2.21E-06
Rb-88	---	6.82E-08	3.40E-08	---	---	---	3.65E-15
Rb-89	---	4.40E-08	2.91E-08	---	---	---	4.22E-17
Sr-89	5.43E-05	---	1.56E-06	---	---	3.02E-04	4.64E-05
Sr-90	4.14E-03	---	8.33E-05	---	---	2.06E-03	9.56E-05
Sr-91	1.10E-08	---	4.39E-10	---	---	7.59E-06	3.24E-05
Sr-92	1.19E-09	---	5.08E-11	---	---	3.43E-06	1.49E-05
Y-90	3.73E-07	---	1.00E-08	---	---	3.66E-05	6.99E-05
Y-91M	4.63E-11	---	1.77E-12	---	---	4.00E-07	3.77E-09
Y-91	8.26E-05	---	2.21E-06	---	---	3.67E-04	5.11E-05
Y-92	1.84E-09	---	5.36E-11	---	---	3.35E-06	2.06E-05
Y-93	1.69E-08	---	4.65E-10	---	---	1.04E-05	7.24E-05
Zr-95	1.82E-05	5.73E-06	3.94E-06	---	8.42E-06	3.36E-04	1.86E-05
Zr-97	1.72E-08	3.40E-09	1.57E-09	---	5.15E-09	1.62E-05	7.88E-05
Nb-95	2.32E-06	1.29E-06	7.08E-07	---	1.25E-06	9.39E-05	1.21E-05
Mo-99	---	2.11E-08	4.03E-09	---	5.14E-08	1.92E-05	3.36E-05
Tc-99M	1.73E-13	4.83E-13	6.24E-12	---	7.20E-12	1.44E-07	7.66E-07

Table 10 - Inhalation Dose Factors for Teenager
(mrem per pCi Inhaled)

Nuclide	Bone	Liver	T. Body	Thyroid	Kidney	Lung	GI-LLI
Tc-101	7.40E-15	1.05E-14	1.03E-13	---	1.90E-13	8.34E-08	1.09E-16
Ru-103	2.63E-07	---	1.12E-07	---	9.29E-07	9.79E-05	1.36E-05
Ru-105	1.40E-10	---	5.42E-11	---	1.76E-10	2.27E-06	1.13E-05
Ru-106	1.23E-05	---	1.55E-06	---	2.38E-05	2.01E-03	1.20E-04
Ag-110M	1.73E-06	1.64E-06	9.99E-07	---	3.13E-06	8.44E-04	3.41E-05
Te-125M	6.10E-07	2.80E-07	8.34E-08	1.75E-07	---	6.70E-05	9.38E-06
Te-127M	2.25E-06	1.02E-06	2.73E-07	5.48E-07	8.17E-06	2.07E-04	1.99E-05
Te-127	2.51E-10	1.14E-10	5.52E-11	1.77E-10	9.10E-10	1.40E-06	1.01E-05
Te-129M	1.74E-06	8.23E-07	2.81E-07	5.72E-07	6.49E-06	2.47E-04	5.06E-05
Te-129	8.87E-12	4.22E-12	2.20E-12	6.48E-12	3.32E-11	4.12E-07	2.02E-07
Te-131M	1.23E-08	7.51E-09	5.03E-09	9.06E-09	5.49E-08	2.97E-05	7.76E-05
Te-131	1.97E-12	1.04E-12	6.30E-13	1.55E-12	7.72E-12	2.92E-07	1.89E-09
Te-132	4.50E-08	3.63E-08	2.74E-08	3.07E-08	2.44E-07	5.61E-05	5.79E-05
I-130	7.80E-07	2.24E-06	8.96E-07	1.86E-04	3.44E-06	---	1.14E-06
I-131	4.43E-06	6.14E-06	3.30E-06	1.83E-03	1.05E-05	---	8.11E-07
I-132	1.99E-07	5.47E-07	1.97E-07	1.89E-05	8.65E-07	---	1.59E-07
I-133	1.52E-06	2.56E-06	7.78E-07	3.65E-04	4.49E-06	---	1.29E-06
I-134	1.11E-07	2.90E-07	1.05E-07	4.94E-06	4.58E-07	---	2.55E-09
I-135	4.62E-07	1.18E-06	4.36E-07	7.76E-05	1.86E-06	---	8.69E-07
Cs-134	6.28E-05	1.41E-04	6.86E-05	---	4.69E-05	1.83E-05	1.22E-06
Cs-136	6.44E-06	2.42E-05	1.71E-05	---	1.38E-05	2.22E-06	1.36E-06
Cs-137	8.38E-05	1.06E-04	3.89E-05	---	3.80E-05	1.51E-05	1.06E-06
Cs-138	5.82E-08	1.07E-07	5.58E-08	---	8.28E-08	9.84E-09	3.38E-11
Ba-139	1.67E-10	1.18E-13	4.87E-12	---	1.11E-13	8.08E-07	8.06E-07
Ba-140	6.84E-06	8.38E-09	4.40E-07	---	2.85E-09	2.54E-04	2.86E-05
Ba-141	1.78E-11	1.32E-14	5.93E-13	---	1.23E-14	4.11E-07	9.33E-14
Ba-142	4.62E-12	4.63E-15	2.84E-13	---	3.92E-15	2.39E-07	5.99E-20
La-140	5.99E-08	2.95E-08	7.82E-09	---	---	2.68E-05	6.09E-05
La-142	1.20E-10	5.31E-11	1.32E-11	---	---	1.27E-06	1.50E-06
Ce-141	3.55E-06	2.37E-06	2.71E-07	---	1.11E-06	7.67E-05	1.58E-05
Ce-143	3.32E-08	2.42E-08	2.70E-09	---	1.08E-08	1.63E-05	3.19E-05
Ce-144	6.11E-04	2.53E-04	3.28E-05	---	1.51E-04	1.67E-03	1.08E-04
Pr-143	1.67E-06	6.64E-07	8.28E-08	---	3.86E-07	6.04E-05	2.67E-05
Pr-144	5.37E-12	2.20E-12	2.72E-13	---	1.26E-12	2.19E-07	2.94E-14
Nd-147	9.83E-07	1.07E-06	6.41E-08	---	6.28E-07	4.65E-05	2.28E-05
W-187	1.50E-09	1.22E-09	4.29E-10	---	---	5.92E-06	2.21E-05
Np-239	4.23E-08	3.60E-08	2.21E-09	---	1.25E-08	8.11E-06	1.65E-05

Table 11 - Inhalation Dose Factors for Child
(mrem per pCi Inhaled)

Nuclide	Bone	Liver	T. Body	Thyroid	Kidney	Lung	GI-LLI
H-3	---	1.73E-07	1.73E-07	1.73E-07	1.73E-07	1.73E-07	1.73E-07
C-14	9.70E-06	1.82E-06	1.82E-06	1.82E-06	1.82E-06	1.82E-06	1.82E-06
Na-24	4.35E-06	4.35E-06	4.35E-06	4.35E-06	4.35E-06	4.35E-06	4.35E-06
P-32	7.04E-04	3.09E-05	2.67E-05	---	---	---	1.14E-05
Cr-51	---	---	4.17E-08	2.31E-08	6.57E-09	4.59E-06	2.93E-07
Mn-54	---	1.16E-05	2.57E-06	---	2.71E-06	4.26E-04	6.19E-06
Mn-56	---	4.48E-10	8.43E-11	---	4.52E-10	3.55E-06	3.33E-05
Fe-55	1.28E-05	6.80E-06	2.10E-06	---	---	3.00E-05	7.75E-07
Fe-59	5.59E-06	9.04E-06	4.51E-06	---	---	3.43E-04	1.91E-05
Co-58	---	4.79E-07	8.55E-07	---	---	2.99E-04	9.29E-06
Co-60	---	3.55E-06	6.12E-06	---	---	1.91E-03	2.60E-05
Ni-63	2.22E-04	1.25E-05	7.56E-06	---	---	7.43E-05	1.71E-06
Ni-65	8.08E-10	7.99E-11	4.44E-11	---	---	2.21E-06	2.27E-05
Cu-64	---	5.39E-10	2.90E-10	---	1.63E-09	2.59E-06	9.92E-06
Zn-65	1.15E-05	3.06E-05	1.90E-05	---	1.93E-05	2.69E-04	4.41E-06
Zn-69	1.81E-11	2.61E-11	2.41E-12	---	1.58E-11	3.84E-07	2.75E-06
Br-83	---	---	1.28E-07	---	---	---	---
Br-84	---	---	1.48E-07	---	---	---	---
Br-85	---	---	6.84E-09	---	---	---	---
Rb-86	---	5.36E-05	3.09E-05	---	---	---	2.16E-06
Rb-88	---	1.52E-07	9.90E-08	---	---	---	4.66E-09
Rb-89	---	9.33E-08	7.85E-08	---	---	---	5.11E-10
Sr-89	1.62E-04	---	4.66E-06	---	---	5.83E-04	4.52E-05
Sr-90	1.04E-02	---	2.07E-04	---	---	3.99E-03	9.28E-05
Sr-91	3.28E-08	---	1.24E-09	---	---	1.44E-05	4.70E-05
Sr-92	3.54E-09	---	1.42E-10	---	---	6.49E-06	6.55E-05
Y-90	1.11E-06	---	2.99E-08	---	---	7.07E-05	7.24E-05
Y-91M	1.37E-10	---	4.98E-12	---	---	7.60E-07	4.64E-07
Y-91	2.47E-04	---	6.59E-06	---	---	7.10E-04	4.97E-05
Y-92	5.50E-09	---	1.57E-10	---	---	6.46E-06	6.46E-05
Y-93	5.04E-08	---	1.38E-09	---	---	2.01E-05	1.05E-04
Zr-95	5.13E-05	1.13E-05	1.00E-05	---	1.61E-05	6.03E-04	1.65E-05
Zr-97	5.07E-08	7.34E-09	4.32E-09	---	1.05E-08	3.06E-05	9.49E-05
Nb-95	6.35E-06	2.48E-06	1.77E-06	---	2.33E-06	1.66E-04	1.00E-05
Mo-99	---	4.66E-08	1.15E-08	---	1.06E-07	3.66E-05	3.42E-05
Tc-99M	4.81E-13	9.41E-13	1.56E-11	---	1.37E-11	2.57E-07	1.30E-06

Table 11 - Inhalation Dose Factors for Child
(mrem per pCi Inhaled)

Nuclide	Bone	Liver	T. Body	Thyroid	Kidney	Lung	GI-LLI
Tc-101	2.19E-14	2.30E-14	2.91E-13	---	3.92E-13	1.58E-07	4.41E-09
Ru-103	7.55E-07	---	2.90E-07	---	1.90E-06	1.79E-04	1.21E-05
Ru-105	4.13E-10	---	1.50E-10	---	3.63E-10	4.30E-06	2.69E-05
Ru-106	3.68E-05	---	4.57E-06	---	4.97E-05	3.87E-03	1.16E-04
Ag-110M	4.56E-06	3.08E-06	2.47E-06	---	5.74E-06	1.48E-03	2.71E-05
Te-125M	1.82E-06	6.29E-07	2.47E-07	5.20E-07	---	1.29E-04	9.13E-06
Te-127M	6.72E-06	2.31E-06	8.16E-07	1.64E-06	1.72E-05	4.00E-04	1.93E-05
Te-127	7.49E-10	2.57E-10	1.65E-10	5.30E-10	1.91E-09	2.71E-06	1.52E-05
Te-129M	5.19E-06	1.85E-06	8.22E-07	1.71E-06	1.36E-05	4.76E-04	4.91E-05
Te-129	2.64E-11	9.45E-12	6.44E-12	1.93E-11	6.94E-11	7.93E-07	6.89E-06
Te-131M	3.63E-08	1.60E-08	1.37E-08	2.64E-08	1.08E-07	5.56E-05	8.32E-05
Te-131	5.87E-12	2.28E-12	1.78E-12	4.59E-12	1.59E-11	5.55E-07	3.60E-07
Te-132	1.30E-07	7.36E-08	7.12E-08	8.58E-08	4.79E-07	1.02E-04	3.72E-05
I-130	2.21E-06	4.43E-06	2.28E-06	4.99E-04	6.61E-06	---	1.38E-06
I-131	1.30E-05	1.30E-05	7.37E-06	4.39E-03	2.13E-05	---	7.68E-07
I-132	5.72E-07	1.10E-06	5.07E-07	5.23E-05	1.69E-06	---	8.65E-07
I-133	4.48E-06	5.49E-06	2.08E-06	1.04E-03	9.13E-06	---	1.48E-06
I-134	3.17E-07	5.84E-07	2.69E-07	1.37E-05	8.92E-07	---	2.58E-07
I-135	1.33E-06	2.36E-06	1.12E-06	2.14E-04	3.62E-06	---	1.20E-06
Cs-134	1.76E-04	2.74E-04	6.07E-05	---	8.93E-05	3.27E-05	1.04E-06
Cs-136	1.76E-05	4.62E-05	3.14E-05	---	2.58E-05	3.93E-06	1.13E-06
Cs-137	2.45E-04	2.23E-04	3.47E-05	---	7.63E-05	2.81E-05	9.78E-07
Cs-138	1.71E-07	2.27E-07	1.50E-07	---	1.68E-07	1.84E-08	7.29E-08
Ba-139	4.98E-10	2.66E-13	1.45E-11	---	2.33E-13	1.56E-06	1.56E-05
Ba-140	2.00E-05	1.75E-08	1.17E-06	---	5.71E-09	4.71E-04	2.75E-05
Ba-141	5.29E-11	2.95E-14	1.72E-12	---	2.56E-14	7.89E-07	7.44E-08
Ba-142	1.35E-11	9.73E-15	7.54E-13	---	7.87E-15	4.44E-07	7.41E-10
La-140	1.74E-07	6.08E-08	2.04E-08	---	---	4.94E-05	6.10E-05
La-142	3.50E-10	1.11E-10	3.49E-11	---	---	2.35E-06	2.05E-05
Ce-141	1.06E-05	5.28E-06	7.83E-07	---	2.31E-06	1.47E-04	1.53E-05
Ce-143	9.89E-08	5.37E-08	7.77E-09	---	2.26E-08	3.12E-05	3.44E-05
Ce-144	1.83E-03	5.72E-04	9.77E-05	---	3.17E-04	3.23E-03	1.05E-04
Pr-143	4.99E-06	1.50E-06	2.47E-07	---	8.11E-07	1.17E-04	2.63E-05
Pr-144	1.61E-11	4.99E-12	8.10E-13	---	2.64E-12	4.23E-07	5.32E-08
Nd-147	2.92E-06	2.36E-06	1.84E-07	---	1.30E-06	8.87E-05	2.22E-05
W-187	4.41E-09	2.61E-09	1.17E-09	---	---	1.11E-05	2.46E-05
Np-239	1.26E-07	8.14E-08	6.35E-09	---	2.63E-08	1.57E-05	1.73E-05

Table 12 - Inhalation Dose Factors for Infant
(mrem per pCi Inhaled)

Nuclide	Bone	Liver	T. Body	Thyroid	Kidney	Lung	GI-LLI
H-3	---	2.63E-07	2.63E-07	2.63E-07	2.63E-07	2.63E-07	2.63E-07
C-14	1.89E-05	3.79E-06	3.79E-06	3.79E-06	3.79E-06	3.79E-06	3.79E-06
Na-24	7.54E-06	7.54E-06	7.54E-06	7.54E-06	7.54E-06	7.54E-06	7.54E-06
P-32	1.45E-03	8.03E-05	5.53E-05	---	---	---	1.15E-05
Cr-51	---	---	6.39E-08	4.11E-08	9.45E-09	9.17E-06	2.55E-07
Mn-54	---	1.81E-05	3.56E-06	---	3.56E-06	7.14E-04	5.04E-06
Mn-56	---	1.10E-09	1.58E-10	---	7.86E-10	8.95E-06	5.12E-05
Fe-55	1.41E-05	8.39E-06	2.38E-06	---	---	6.21E-05	7.82E-07
Fe-59	9.69E-06	1.68E-05	6.77E-06	---	---	7.25E-04	1.77E-05
Co-58	---	8.71E-07	1.30E-06	---	---	5.55E-04	7.95E-06
Co-60	---	5.73E-06	8.41E-06	---	---	3.22E-03	2.28E-05
Ni-63	2.42E-04	1.46E-05	8.29E-06	---	---	1.49E-04	1.73E-06
Ni-65	1.71E-09	2.03E-10	8.79E-11	---	---	5.80E-06	3.58E-05
Cu-64	---	1.34E-09	5.53E-10	---	2.84E-09	6.64E-06	1.07E-05
Zn-65	1.38E-05	4.47E-05	2.22E-05	---	2.32E-05	4.62E-04	3.67E-05
Zn-69	3.85E-11	6.91E-11	5.13E-12	---	2.87E-11	1.05E-06	9.44E-06
Br-83	---	---	2.72E-07	---	---	---	---
Br-84	---	---	2.86E-07	---	---	---	---
Br-85	---	---	1.46E-08	---	---	---	---
Rb-86	---	1.36E-04	6.30E-05	---	---	---	2.17E-06
Rb-88	---	3.98E-07	2.05E-07	---	---	---	2.42E-07
Rb-89	---	2.29E-07	1.47E-07	---	---	---	4.87E-08
Sr-89	2.84E-04	---	8.15E-06	---	---	1.45E-03	4.57E-05
Sr-90	1.11E-02	---	2.23E-04	---	---	8.03E-03	9.36E-05
Sr-91	6.83E-08	---	2.47E-09	---	---	3.76E-05	5.24E-05
Sr-92	7.50E-09	---	2.79E-10	---	---	1.70E-05	1.00E-04
Y-90	2.35E-06	---	6.30E-08	---	---	1.92E-04	7.43E-05
Y-91M	2.91E-10	---	9.90E-12	---	---	1.99E-06	1.68E-06
Y-91	4.20E-04	---	1.12E-05	---	---	1.75E-03	5.02E-05
Y-92	1.17E-08	---	3.29E-10	---	---	1.75E-05	9.04E-05
Y-93	1.07E-07	---	2.91E-09	---	---	5.46E-05	1.19E-04
Zr-95	8.24E-05	1.99E-05	1.45E-05	---	2.22E-05	1.25E-03	1.55E-05
Zr-97	1.07E-07	1.83E-08	8.36E-09	---	1.85E-08	7.88E-05	1.00E-04
Nb-95	1.12E-05	4.59E-06	2.70E-06	---	3.37E-06	3.42E-04	9.05E-06
Mo-99	---	1.18E-07	2.31E-08	---	1.89E-07	9.63E-05	3.48E-05

Table 12 - Inhalation Dose Factors for Infant
(mrem per pCi Inhaled)

Nuclide	Bone	Liver	T. Body	Thyroid	Kidney	Lung	GI-LLI
Tc-99M	9.98E-13	2.06E-12	2.66E-11	---	2.22E-11	5.79E-07	1.45E-06
Tc-101	4.65E-14	5.88E-14	5.80E-13	---	6.99E-13	4.17E-07	6.03E-07
Ru-103	1.44E-06	---	4.85E-07	---	3.03E-06	3.94E-04	1.15E-05
Ru-105	8.74E-10	---	2.93E-10	---	6.42E-10	1.12E-05	3.46E-05
Ru-106	6.20E-05	---	7.77E-06	---	7.61E-05	8.26E-03	1.17E-04
Ag-110M	7.13E-06	5.16E-06	3.57E-06	---	7.80E-06	2.62E-03	2.36E-05
Te-125M	3.40E-06	1.42E-06	4.70E-07	1.16E-06	---	3.19E-04	9.22E-06
Te-127M	1.19E-05	4.93E-06	1.48E-06	3.48E-06	2.68E-05	9.37E-04	1.95E-05
Te-127	1.59E-09	6.81E-10	3.40E-10	1.32E-09	3.47E-09	7.39E-06	1.74E-05
Te-129M	1.01E-05	4.35E-06	1.59E-06	3.91E-06	2.27E-05	1.20E-03	4.93E-05
Te-129	5.63E-11	2.48E-11	1.34E-11	4.82E-11	1.25E-10	2.14E-06	1.88E-05
Te-131M	7.62E-08	3.93E-08	2.59E-08	6.38E-08	1.89E-07	1.42E-04	8.51E-05
Te-131	1.24E-11	5.87E-12	3.57E-12	1.13E-11	2.85E-11	1.47E-06	5.87E-06
Te-132	2.66E-07	1.69E-07	1.26E-07	1.99E-07	7.39E-07	2.43E-04	3.15E-05
I-130	4.54E-06	9.91E-06	3.98E-06	1.14E-03	1.09E-05	---	1.42E-06
I-131	2.71E-05	3.17E-05	1.40E-05	1.06E-02	3.70E-05	---	7.56E-07
I-132	1.21E-06	2.53E-06	8.99E-07	1.21E-04	2.82E-06	---	1.36E-06
I-133	9.46E-06	1.37E-05	4.00E-06	2.54E-03	1.60E-05	---	1.54E-06
I-134	6.58E-07	1.34E-06	4.75E-07	3.18E-05	1.49E-06	---	9.21E-07
I-135	2.76E-06	5.43E-06	1.98E-06	4.97E-04	6.05E-06	---	1.31E-06
Cs-134	2.83E-04	5.02E-04	5.32E-05	---	1.36E-04	5.69E-05	9.53E-07
Cs-136	3.45E-05	9.61E-05	3.78E-05	---	4.03E-05	8.40E-06	1.02E-06
Cs-137	3.92E-04	4.37E-04	3.25E-05	---	1.23E-04	5.09E-05	9.53E-07
Cs-138	3.61E-07	5.58E-07	2.84E-07	---	2.93E-07	4.67E-08	6.26E-07
Ba-139	118.06E-09	7.03E-13	3.07E-11	---	4.23E-13	4.25E-06	3.64E-05
Ba-140	4.00E-05	4.00E-08	2.07E-06	---	9.59E-09	1.14E-03	2.74E-05
Ba-141	1.12E-10	7.70E-14	3.55E-12	---	4.64E-14	2.12E-06	3.39E-06
Ba-142	2.84E-11	2.36E-14	1.40E-12	---	1.36E-14	1.11E-06	4.95E-07
La-140	3.61E-07	1.43E-07	3.68E-08	---	---	1.20E-04	6.06E-05
La-142	7.36E-10	2.69E-10	6.46E-11	---	---	5.87E-06	4.25E-05
Ce-141	1.98E-05	1.19E-05	1.42E-06	---	3.75E-06	3.69E-04	1.54E-05
Ce-143	2.09E-07	1.38E-07	1.58E-08	---	4.03E-08	8.30E-05	3.55E-05
Ce-144	2.28E-03	8.65E-04	1.26E-04	---	3.84E-04	7.03E-03	1.06E-04
Pr-143	1.00E-05	3.74E-06	4.99E-07	---	1.41E-06	3.09E-04	2.66E-05
Pr-144	3.42E-11	1.32E-11	1.72E-12	---	4.80E-12	1.15E-06	3.06E-06
Nd-147	5.67E-06	5.81E-06	3.57E-07	---	2.25E-06	2.30E-04	2.23E-05

Table 12 - Inhalation Dose Factors for Infant
(mrem per pCi Inhaled)

Nuclide	Bone	Liver	T. Body	Thyroid	Kidney	Lung	GI-LLI
W-187	9.26E-09	6.44E-09	2.23E-09	---	---	2.83E-05	2.54E-05
Np-239	2.65E-07	2.13E-07	1.34E-08	---	4.73E-08	4.25E-05	1.78E-05

Table 13 - Ingestion Dose Factors for Adult
(mrem per pCi Ingested)

Nuclide	Bone	Liver	T. Body	Thyroid	Kidney	Lung	GI-LLI
H-3	---	5.99E-08	5.99E-08	5.99E-08	5.99E-08	5.99E-08	5.99E-08
C-14	2.84E-06	5.68E-07	5.68E-07	5.68E-07	5.68E-07	5.68E-07	5.68E-07
Na-24	1.70E-06	1.70E-06	1.70E-06	1.70E-06	1.70E-06	1.70E-06	1.70E-06
P-32	1.93E-04	1.20E-05	7.46E-06	---	---	---	2.17E-05
Cr-51	---	---	2.66E-09	1.59E-09	5.86E-10	3.53E-09	6.69E-07
Mn-54	---	4.57E-06	8.72E-07	---	1.36E-06	---	1.40E-05
Mn-56	---	1.15E-07	2.04E-08	---	1.46E-07	---	3.67E-06
Fe-55	2.75E-06	1.90E-06	4.43E-07	---	---	1.06E-06	1.09E-06
Fe-59	4.34E-06	1.02E-05	3.91E-06	---	---	2.85E-06	3.40E-05
Co-58	---	7.45E-07	1.67E-06	---	---	---	1.51E-05
Co-60	---	2.14E-06	4.72E-06	---	---	---	4.02E-05
Ni-63	1.30E-04	9.01E-06	4.36E-06	---	---	---	1.88E-06
Ni-65	5.28E-07	6.86E-08	3.13E-08	---	---	---	1.74E-06
Cu-64	---	8.33E-08	3.91E-08	---	2.10E-07	---	7.10E-06
Zn-65	4.84E-06	1.54E-05	6.96E-06	---	1.03E-05	---	9.70E-06
Zn-69	1.03E-08	1.97E-08	1.37E-09	---	1.28E-08	---	2.96E-09
Br-83	---	---	4.02E-08	---	---	---	5.79E-08
Br-84	---	---	5.21E-08	---	---	---	4.09E-13
Br-85	---	---	2.14E-09	---	---	---	---
Rb-86	---	2.11E-05	9.83E-06	---	---	---	4.16E-06
Rb-88	---	6.05E-08	3.21E-08	---	---	---	8.36E-19
Rb-89	---	4.01E-08	2.82E-08	---	---	---	2.33E-21
Sr-89	3.08E-04	---	8.84E-06	---	---	---	4.94E-05
Sr-90	8.71E-03	---	1.75E-04	---	---	---	2.19E-04
Sr-91	5.67E-06	---	2.29E-07	---	---	---	2.70E-05
Sr-92	2.15E-06	---	9.30E-08	---	---	---	4.26E-05
Y-90	9.62E-09	---	2.58E-10	---	---	---	1.02E-04
Y-91M	9.09E-11	---	3.52E-12	---	---	---	2.67E-10
Y-91	1.41E-07	---	3.77E-09	---	---	---	7.76E-05
Y-92	8.45E-10	---	2.47E-11	---	---	---	1.48E-05
Y-93	2.68E-09	---	7.40E-11	---	---	---	8.50E-05
Zr-95	3.04E-08	9.75E-09	6.60E-09	---	1.53E-08	---	3.09E-05
Zr-97	1.68E-09	3.39E-10	1.55E-10	---	5.12E-10	---	1.05E-04
Nb-95	6.22E-09	3.46E-09	1.86E-09	---	3.42E-09	---	2.10E-05
Mo-99	---	4.31E-06	8.20E-07	---	9.76E-06	---	9.99E-06
Tc-99M	2.47E-10	6.98E-10	8.89E-09	---	1.06E-08	3.42E-10	4.13E-07

Table 13 - Ingestion Dose Factors for Adult
(mrem per pCi Ingested)

Nuclide	Bone	Liver	T. Body	Thyroid	Kidney	Lung	GI-LLI
Tc-101	2.54E-10	3.66E-10	3.59E-09	---	6.59E-09	1.87E-10	1.10E-21
Ru-103	1.85E-07	---	7.97E-08	---	7.06E-07	---	2.16E-05
Ru-105	1.54E-08	---	6.08E-09	---	1.99E-07	---	9.42E-06
Ru-106	2.75E-06	---	3.48E-07	---	5.31E-06	---	1.78E-04
Ag-110M	1.60E-07	1.48E-07	8.79E-08	---	2.91E-07	---	6.04E-05
Te-125M	2.68E-06	9.71E-07	3.59E-07	8.06E-07	1.09E-05	---	1.07E-05
Te-127M	6.77E-06	2.42E-06	8.25E-07	1.73E-06	2.75E-05	---	2.27E-05
Te-127	1.10E-07	3.95E-08	2.38E-08	8.15E-08	4.48E-07	---	8.68E-06
Te-129M	1.15E-05	4.29E-06	1.82E-06	3.95E-06	4.80E-05	---	5.79E-05
Te-129	3.14E-08	1.18E-08	7.65E-09	2.41E-08	1.32E-07	---	2.37E-08
Te-131M	1.73E-06	8.46E-07	7.05E-07	1.34E-06	8.57E-06	---	8.40E-05
Te-131	1.97E-08	8.23E-09	6.22E-09	1.62E-08	8.63E-08	---	2.79E-09
Te-132	2.52E-06	1.63E-06	1.53E-06	1.80E-06	1.57E-05	---	7.71E-05
I-130	7.56E-07	2.23E-06	8.80E-07	1.89E-04	3.48E-06	---	1.92E-06
I-131	4.16E-06	5.95E-06	3.41E-06	1.95E-03	1.02E-05	---	1.57E-06
I-132	2.03E-07	5.43E-07	1.90E-07	1.90E-05	8.65E-07	---	1.02E-07
I-133	1.42E-06	2.47E-06	7.53E-07	3.63E-04	4.31E-06	---	2.22E-06
I-134	1.06E-07	2.88E-07	1.03E-07	4.99E-06	4.58E-07	---	2.51E-10
I-135	4.43E-07	1.16E-06	4.28E-07	7.65E-05	1.86E-06	---	1.31E-06
Cs-134	6.22E-05	1.48E-04	1.21E-04	---	4.79E-05	1.59E-05	2.59E-06
Cs-136	6.51E-06	2.57E-05	1.85E-05	---	1.43E-05	1.96E-06	2.92E-06
Cs-137	7.97E-05	1.09E-04	7.14E-05	---	3.70E-05	1.23E-05	2.11E-06
Cs-138	5.52E-08	1.09E-07	5.40E-08	---	8.01E-08	7.91E-09	4.65E-13
Ba-139	9.70E-08	6.91E-11	2.84E-09	---	6.46E-11	3.92E-11	1.72E-07
Ba-140	2.03E-05	2.55E-08	1.33E-06	---	8.67E-09	1.46E-08	4.18E-05
Ba-141	4.71E-08	3.56E-11	1.59E-09	---	3.31E-11	2.02E-11	2.22E-17
Ba-142	2.13E-08	2.19E-11	1.34E-09	---	1.85E-11	1.24E-11	3.00E-26
La-140	2.50E-09	1.26E-09	3.33E-10	---	---	---	9.25E-05
La-142	1.28E-10	5.82E-11	1.45E-11	---	---	---	4.25E-07
Ce-141	9.36E-09	6.33E-09	7.18E-10	---	2.94E-09	---	2.42E-05
Ce-143	1.65E-09	1.22E-06	1.35E-10	---	5.37E-10	---	4.56E-05
Ce-144	4.88E-07	2.04E-07	2.62E-08	---	1.21E-07	---	1.65E-04
Pr-143	9.20E-09	3.69E-09	4.56E-10	---	2.13E-09	---	4.03E-05
Pr-144	3.01E-11	1.25E-11	1.53E-12	---	7.05E-12	---	4.33E-18
Nd-147	6.29E-09	7.27E-09	4.35E-10	---	4.25E-09	---	3.49E-05
W-187	1.03E-07	8.61E-08	3.01E-08	---	---	---	2.82E-05
Np-239	1.19E-09	1.17E-10	6.45E-11	---	3.65E-10	---	2.40E-05

Table 14 - Ingestion Dose Factors for Teenager
(mrem per pCi Ingested)

Nuclide	Bone	Liver	T. Body	Thyroid	Kidney	Lung	GI-LLI
H-3	--	6.04E-08	6.04E-08	6.04E-08	6.04E-08	6.04E-08	6.04E-08
C-14	4.06E-06	8.12E-07	8.12E-07	8.12E-07	8.12E-07	8.12E-07	8.12E-07
Na-24	2.30E-06	2.30E-06	2.30E-06	2.30E-06	2.30E-06	2.30E-06	2.30E-06
P-32	2.76E-04	1.71E-05	1.07E-05	---	---	---	2.32E-05
Cr-51	---	---	3.60E-09	2.00E-09	7.89E-10	5.14E-09	6.05E-07
Mn-54	---	5.90E-06	1.17E-06	---	1.76E-06	---	1.21E-05
Mn-56	---	1.58E-07	2.81E-08	---	2.00E-07	---	1.04E-05
Fe-55	3.78E-06	2.68E-06	6.25E-07	---	---	1.70E-06	1.16E-06
Fe-59	5.87E-06	1.37E-05	5.29E-06	---	---	4.32E-06	3.24E-05
Co-58	---	9.72E-07	2.24E-06	---	---	---	1.34E-05
Co-60	---	2.81E-06	6.33E-06	---	---	---	3.66E-05
Ni-63	1.77E-04	1.25E-05	6.00E-06	---	---	---	1.99E-06
Ni-65	7.49E-07	9.57E-08	4.36E-08	---	---	---	5.19E-06
Cu-64	---	1.15E-07	5.41E-08	---	2.91E-07	---	8.92E-06
Zn-65	5.76E-06	2.00E-05	9.33E-06	---	1.28E-05	---	8.47E-06
Zn-69	1.47E-08	2.80E-08	1.96E-09	---	1.83E-08	---	5.16E-08
Br-83	---	---	5.74E-08	---	---	---	---
Br-84	---	---	7.22E-08	---	---	---	---
Br-85	---	---	3.05E-09	---	---	---	---
Rb-86	---	2.98E-05	1.40E-05	---	---	---	4.41E-06
Rb-88	---	8.52E-08	4.54E-08	---	---	---	7.30E-15
Rb-89	---	5.50E-08	3.89E-08	---	---	---	8.43E-17
Sr-89	4.40E-04	---	1.26E-05	---	---	---	5.24E-05
Sr-90	1.02E-02	---	2.04E-04	---	---	---	2.33E-04
Sr-91	8.07E-06	---	3.21E-07	---	---	---	3.66E-05
Sr-92	3.05E-06	---	1.30E-07	---	---	---	7.77E-05
Y-90	1.37E-08	---	3.69E-10	---	---	---	1.13E-04
Y-91M	1.29E-10	---	4.93E-12	---	---	---	6.09E-09
Y-91	2.01E-07	---	5.39E-09	---	---	---	8.24E-05
Y-92	1.21E-09	---	3.50E-11	---	---	---	3.32E-05
Y-93	3.83E-09	---	1.05E-10	---	---	---	1.17E-04
Zr-95	4.12E-08	1.30E-08	8.94E-09	---	1.91E-08	---	3.00E-05
Zr-97	2.37E-09	4.69E-10	2.16E-10	---	7.11E-10	---	1.27E-04
Nb-95	8.22E-09	4.56E-09	2.51E-09	---	4.42E-09	---	1.95E-05
Mo-99	---	6.03E-06	1.15E-06	---	1.38E-05	---	1.08E-05
Tc-99M	3.32E-10	9.26E-10	1.20E-08	---	1.38E-08	5.14E-10	6.08E-07

Table 14 - Ingestion Dose Factors for Teenager
(mrem per pCi Ingested)

Nuclide	Bone	Liver	T. Body	Thyroid	Kidney	Lung	GI-LLI
Tc-101	3.60E-10	5.12E-10	5.03E-09	---	9.26E-09	3.12E-10	8.75E-17
Ru-103	2.55E-07	---	1.09E-07	---	8.99E-07	---	2.13E-05
Ru-105	2.18E-08	---	8.46E-09	---	2.75E-07	---	1.76E-05
Ru-106	3.92E-06	---	4.94E-07	---	7.56E-06	---	1.88E-04
Ag-110M	2.05E-07	1.94E-07	1.18E-07	---	3.70E-07	---	5.45E-05
Te-125M	3.83E-06	1.38E-06	5.12E-07	1.07E-06	---	---	1.13E-05
Te-127M	9.67E-06	3.43E-06	1.15E-06	2.30E-06	3.92E-05	---	2.41E-05
Te-127	1.58E-07	5.60E-08	3.40E-08	1.09E-07	6.40E-07	---	1.22E-05
Te-129M	1.63E-05	6.05E-06	2.58E-06	5.26E-06	6.82E-05	---	6.12E-05
Te-129	4.48E-08	1.67E-08	1.09E-08	3.20E-08	1.88E-07	---	2.45E-07
Te-131M	2.44E-06	1.17E-06	9.76E-07	1.76E-06	1.22E-05	---	9.39E-05
Te-131	2.79E-08	1.15E-08	8.72E-09	2.15E-08	1.22E-07	---	2.29E-09
Te-132	3.49E-06	2.21E-06	2.08E-06	2.33E-06	2.12E-05	---	7.00E-05
I-130	1.03E-06	2.98E-06	1.19E-06	2.43E-04	4.59E-06	---	2.29E-06
I-131	5.85E-06	8.19E-06	4.40E-06	2.39E-03	1.41E-05	---	1.62E-06
I-132	2.79E-07	7.30E-07	2.62E-07	2.46E-05	1.15E-06	---	3.18E-07
I-133	2.01E-06	3.41E-06	1.04E-06	4.76E-04	5.98E-06	---	2.58E-06
I-134	1.46E-07	3.87E-07	1.39E-07	6.45E-06	6.10E-07	---	5.10E-09
I-135	6.10E-07	1.57E-06	5.82E-07	1.01E-04	2.48E-06	---	1.74E-06
Cs-134	8.37E-05	1.97E-04	9.14E-05	---	6.26E-05	2.39E-05	2.45E-06
Cs-136	8.59E-06	3.38E-05	2.27E-05	---	1.84E-05	2.90E-06	2.72E-06
Cs-137	1.12E-04	1.49E-04	5.19E-05	---	5.07E-05	1.97E-05	2.12E-06
Cs-138	7.76E-08	1.49E-07	7.45E-08	---	1.10E-07	1.28E-08	4.76E-11
Ba-139	1.39E-07	9.78E-11	4.05E-09	---	9.22E-11	6.74E-11	1.24E-06
Ba-140	2.84E-05	3.48E-08	1.83E-06	---	1.18E-08	2.34E-08	4.38E-05
Ba-141	6.71E-08	5.01E-11	2.24E-09	---	4.65E-11	3.43E-11	1.43E-13
Ba-142	2.99E-08	2.99E-11	1.84E-09	---	2.53E-11	1.99E-11	9.18E-20
La-140	3.48E-09	1.71E-09	4.55E-10	---	---	---	9.28E-05
La-142	1.79E-10	7.95E-11	1.98E-11	---	---	---	2.42E-06
Ce-141	1.33E-08	8.88E-09	1.02E-09	---	4.18E-09	---	2.54E-05
Ce-143	2.35E-09	1.71E-06	1.91E-10	---	7.67E-10	---	5.14E-05
Ce-144	6.96E-07	2.88E-07	3.74E-08	---	1.72E-07	---	1.75E-04
Pr-143	1.31E-08	5.23E-09	6.52E-10	---	3.04E-09	---	4.31E-05
Pr-144	4.30E-11	1.76E-11	2.18E-12	---	1.01E-11	---	4.74E-14
Nd-147	9.38E-09	1.02E-08	6.11E-10	---	5.99E-09	---	3.68E-05
W-187	1.46E-07	1.19E-07	4.17E-08	---	---	---	3.22E-05
Np-239	1.76E-09	1.66E-10	9.22E-11	---	5.21E-10	---	2.67E-05

Table 15 - Ingestion Dose Factors for Child
(mrem per pCi Ingested)

Nuclide	Bone	Liver	T. Body	Thyroid	Kidney	Lung	GI-LLI
H-3	---	1.16E-07	1.16E-07	1.16E-07	1.16E-07	1.16E-07	1.16E-07
C-14	1.21E-05	2.42E-06	2.42E-06	2.42E-06	2.42E-06	2.42E-06	2.42E-06
Na-24	5.80E-06	5.80E-06	5.80E-06	5.80E-06	5.80E-06	5.80E-06	5.80E-06
P-32	8.25E-04	3.86E-05	3.18E-05	---	---	---	2.28E-05
Cr-51	---	---	8.90E-09	4.94E-09	1.35E-09	9.02E-09	4.72E-07
Mn-54	---	1.07E-05	2.85E-06	---	3.00E-06	---	8.98E-06
Mn-56	---	3.34E-07	7.54E-08	---	4.04E-07	---	4.84E-05
Fe-55	1.15E-05	6.10E-06	1.89E-06	---	---	3.45E-06	1.13E-06
Fe-59	1.65E-05	2.67E-05	1.33E-05	---	---	7.74E-06	2.78E-05
Co-58	---	1.80E-06	5.51E-06	---	---	---	1.05E-05
Co-60	---	5.29E-06	1.56E-05	---	---	---	2.93E-05
Ni-63	5.38E-04	2.88E-05	1.83E-05	---	---	---	1.94E-06
Ni-65	2.22E-06	2.09E-07	1.22E-07	---	---	---	2.56E-05
Cu-64	---	2.45E-07	1.48E-07	---	5.92E-07	---	1.15E-05
Zn-65	1.37E-05	3.65E-05	2.27E-05	---	2.30E-05	---	6.41E-06
Zn-69	4.38E-08	6.33E-08	5.85E-09	---	3.84E-08	---	3.99E-06
Br-83	---	---	1.71E-07	---	---	---	---
Br-84	---	---	1.98E-07	---	---	---	---
Br-85	---	---	9.12E-09	---	---	---	---
Rb-86	---	6.70E-05	4.12E-05	---	---	---	4.31E-06
Rb-88	---	1.90E-07	1.32E-07	---	---	---	9.32E-09
Rb-89	---	1.17E-07	1.04E-07	---	---	---	1.02E-09
Sr-89	1.32E-03	---	3.77E-05	---	---	---	5.11E-05
Sr-90	2.56E-02	---	5.15E-04	---	---	---	2.29E-04
Sr-91	2.40E-05	---	9.06E-07	---	---	---	5.30E-05
Sr-92	9.03E-06	---	3.62E-07	---	---	---	1.71E-04
Y-90	4.11E-08	---	1.10E-09	---	---	---	1.17E-04
Y-91M	3.82E-10	---	1.39E-11	---	---	---	7.48E-07
Y-91	6.02E-07	---	1.61E-08	---	---	---	8.02E-05
Y-92	3.60E-09	---	1.03E-10	---	---	---	1.04E-04
Y-93	1.14E-08	---	3.13E-10	---	---	---	1.70E-04
Zr-95	1.16E-07	2.55E-08	2.27E-08	---	3.65E-08	---	2.66E-05
Zr-97	6.99E-09	1.01E-09	5.96E-10	---	1.45E-09	---	1.53E-04
Nb-95	2.25E-08	8.76E-09	6.26E-09	---	8.23E-09	---	1.62E-05
Mo-99	---	1.33E-05	3.29E-06	---	2.84E-05	---	1.10E-05
Tc-99M	9.23E-10	1.81E-09	3.00E-08	---	2.63E-08	9.19E-10	1.03E-06

Table 15 - Ingestion Dose Factors for Child
(mrem per pCi Ingested)

Nuclide	Bone	Liver	T. Body	Thyroid	Kidney	Lung	GI-LLI
Tc-101	1.07E-09	1.12E-09	1.42E-08	---	1.91E-08	5.92E-10	3.56E-09
Ru-103	7.31E-07	---	2.81E-07	---	1.84E-06	---	1.89E-05
Ru-105	6.45E-08	---	2.34E-08	---	5.67E-07	---	4.21E-05
Ru-106	1.17E-05	---	1.46E-06	---	1.58E-05	---	1.82E-04
Ag-110M	5.39E-07	3.64E-07	2.91E-07	---	6.78E-07	---	4.33E-05
Te-125M	1.14E-05	3.09E-06	1.52E-06	3.20E-06	---	---	1.10E-05
Te-127M	2.89E-05	7.78E-06	3.43E-06	6.91E-06	8.24E-05	---	2.34E-05
Te-127	4.71E-07	1.27E-07	1.01E-07	3.26E-07	1.34E-06	---	1.84E-05
Te-129M	4.87E-05	1.36E-05	7.56E-06	1.57E-05	1.43E-04	---	5.94E-05
Te-129	1.34E-07	3.74E-08	3.18E-08	9.56E-08	3.92E-07	---	8.34E-06
Te-131M	7.20E-06	2.49E-06	2.65E-06	5.12E-06	2.41E-05	---	1.01E-04
Te-131	8.30E-08	2.53E-08	2.47E-08	6.35E-08	2.51E-07	---	4.36E-07
Te-132	1.01E-05	4.47E-06	5.40E-06	6.51E-06	4.15E-05	---	4.50E-05
I-130	2.92E-06	5.90E-06	3.04E-06	6.50E-04	8.82E-06	---	2.76E-06
I-131	1.72E-05	1.73E-05	9.83E-06	5.72E-03	2.84E-05	---	1.54E-06
I-132	8.00E-07	1.47E-06	6.76E-07	6.82E-05	2.25E-06	---	1.73E-06
I-133	5.92E-06	7.32E-06	2.77E-06	1.36E-03	1.22E-05	---	2.95E-06
I-134	4.19E-07	7.78E-07	3.58E-07	1.79E-05	1.19E-06	---	5.16E-07
I-135	1.75E-06	3.15E-06	1.49E-06	2.79E-04	4.83E-06	---	2.40E-06
Cs-134	2.34E-04	3.84E-04	8.10E-05	---	1.19E-04	4.27E-05	2.07E-06
Cs-136	2.35E-05	6.46E-05	4.18E-05	---	3.44E-05	5.13E-06	2.27E-06
Cs-137	3.27E-04	3.13E-04	4.62E-05	---	1.02E-04	3.67E-05	1.96E-06
Cs-138	2.28E-07	3.17E-07	2.01E-07	---	2.23E-07	2.40E-08	1.46E-07
Ba-139	4.14E-07	2.21E-10	1.20E-08	---	1.93E-10	1.30E-10	2.39E-05
Ba-140	8.31E-05	7.28E-08	4.85E-06	---	2.37E-08	4.34E-08	4.21E-05
Ba-141	2.00E-07	1.12E-10	6.51E-09	---	9.69E-11	6.58E-10	1.14E-07
Ba-142	8.74E-08	6.29E-11	4.88E-09	---	5.09E-11	3.70E-11	1.14E-09
La-140	1.01E-08	3.53E-09	1.19E-09	---	---	---	9.84E-05
La-142	5.24E-10	1.67E-10	5.23E-11	---	---	---	3.31E-05
Ce-141	3.97E-08	1.98E-08	2.94E-09	---	8.68E-09	---	2.47E-05
Ce-143	6.99E-09	3.79E-06	5.49E-10	---	1.59E-09	---	5.55E-05
Ce-144	2.08E-06	6.52E-07	1.11E-07	---	3.61E-07	---	1.70E-04
Pr-143	3.93E-08	1.18E-08	1.95E-09	---	6.39E-09	---	4.24E-05
Pr-144	1.29E-10	3.99E-11	6.49E-12	---	2.11E-11	---	8.59E-08
Nd-147	2.79E-08	2.26E-08	1.75E-09	---	1.24E-08	---	3.58E-05
W-187	4.29E-07	2.54E-07	1.14E-07	---	---	---	3.57E-05
Np-239	5.25E-09	3.77E-10	2.65E-10	---	1.09E-09	---	2.79E-05

Table 16 - Ingestion Dose Factors for Infant
(mrem per pCi Ingested)

Nuclide	Bone	Liver	T. Body	Thyroid	Kidney	Lung	GI-LLI
H-3	---	1.76E-07	1.76E-07	1.76E-07	1.76E-07	1.76E-07	1.76E-07
C-14	2.37E-05	5.06E-06	5.06E-06	5.06E-06	5.06E-06	5.06E-06	5.06E-06
Na-24	1.01E-05	1.01E-05	1.01E-05	1.01E-05	1.01E-05	1.01E-05	1.01E-05
P-32	1.70E-03	1.00E-04	6.59E-05	---	---	---	2.30E-05
Cr-51	---	---	1.41E-08	9.20E-09	2.01E-09	1.79E-08	4.11E-07
Mn-54	---	1.99E-05	4.51E-06	---	4.41E-06	---	7.31E-06
Mn-56	---	8.18E-07	1.41E-07	---	7.03E-07	---	7.43E-05
Fe-55	1.39E-05	8.98E-06	2.40E-06	---	---	4.36E-06	1.14E-06
Fe-59	3.08E-05	5.38E-05	2.12E-05	---	---	1.59E-05	2.57E-05
Co-58	---	3.60E-06	8.98E-06	---	---	---	8.97E-06
Co-60	---	1.08E-05	2.55E-05	---	---	---	2.57E-05
Ni-63	6.34E-04	3.92E-05	2.20E-05	---	---	---	1.95E-06
Ni-65	4.70E-06	5.32E-07	2.42E-07	---	---	---	4.05E-05
Cu-64	---	6.09E-07	2.82E-07	---	1.03E-06	---	1.25E-05
Zn-65	1.84E-05	6.31E-05	2.91E-05	---	3.06E-05	---	5.33E-05
Zn-69	9.33E-08	1.68E-07	1.25E-08	---	6.98E-08	---	1.37E-05
Br-83	---	---	3.63E-07	---	---	---	---
Br-84	---	---	3.82E-07	---	---	---	---
Br-85	---	---	1.94E-08	---	---	---	---
Rb-86	---	1.70E-04	8.40E-05	---	---	---	4.35E-06
Rb-88	---	4.98E-07	2.73E-07	---	---	---	4.85E-07
Rb-89	---	2.86E-07	1.97E-07	---	---	---	9.74E-08
Sr-89	2.51E-03	---	7.20E-05	---	---	---	5.16E-05
Sr-90	2.83E-02	---	5.74E-04	---	---	---	2.31E-04
Sr-91	5.00E-05	---	1.81E-06	---	---	---	5.92E-05
Sr-92	1.92E-05	---	7.13E-07	---	---	---	2.07E-04
Y-90	8.69E-08	---	2.33E-09	---	---	---	1.20E-04
Y-91M	8.10E-10	---	2.76E-11	---	---	---	2.70E-06
Y-91	1.13E-06	---	3.01E-08	---	---	---	8.10E-05
Y-92	7.65E-09	---	2.15E-10	---	---	---	1.46E-04
Y-93	2.43E-08	---	6.62E-10	---	---	---	1.92E-04
Zr-95	2.06E-07	5.02E-08	3.56E-08	---	5.41E-08	---	2.50E-05
Zr-97	1.48E-08	2.54E-09	1.16E-09	---	2.56E-09	---	1.62E-04
Nb-95	4.20E-08	1.73E-08	1.00E-08	---	1.24E-08	---	1.46E-05
Mo-99	---	3.40E-05	6.63E-06	---	5.08E-05	---	1.12E-05
Tc-99M	1.92E-09	3.96E-09	5.10E-08	---	4.26E-08	2.07E-09	1.15E-06

Table 16 - Ingestion Dose Factors for Infant
(mrem per pCi Ingested)

Nuclide	Bone	Liver	T. Body	Thyroid	Kidney	Lung	GI-LLI
Tc-101	2.27E-09	2.86E-09	2.83E-08	---	3.40E-08	1.56E-09	4.86E-07
Ru-103	1.48E-06	---	4.95E-07	---	3.08E-06	---	1.80E-05
Ru-105	1.36E-07	---	4.58E-08	---	1.00E-06	---	5.41E-05
Ru-106	2.41E-05	---	3.01E-06	---	2.85E-05	---	1.83E-04
Ag-110M	9.96E-07	7.27E-07	4.81E-07	---	1.04E-06	---	3.77E-05
Te-125M	2.33E-05	7.79E-06	3.15E-06	7.84E-06	---	---	1.11E-05
Te-127M	5.85E-05	1.94E-05	7.08E-06	1.69E-05	1.44E-04	---	2.36E-05
Te-127	1.00E-06	3.35E-07	2.15E-07	8.14E-07	2.44E-06	---	2.10E-05
Te-129M	1.00E-04	3.43E-05	1.54E-05	3.84E-05	2.50E-04	---	5.97E-05
Te-129	2.84E-07	9.79E-08	6.63E-08	2.38E-07	7.07E-07	---	2.27E-05
Te-131M	1.52E-05	6.12E-06	5.05E-06	1.24E-05	4.21E-05	---	1.03E-04
Te-131	1.76E-07	6.50E-08	4.94E-08	1.57E-07	4.50E-07	---	7.11E-06
Te-132	2.08E-05	1.03E-05	9.61E-06	1.52E-05	6.44E-05	---	3.81E-05
I-130	6.00E-06	1.32E-05	5.30E-06	1.48E-03	1.45E-05	---	2.83E-06
I-131	3.59E-05	4.23E-05	1.86E-05	1.39E-02	4.94E-05	---	1.51E-06
I-132	1.66E-06	3.37E-06	1.20E-06	1.58E-04	3.76E-06	---	2.73E-06
I-133	1.25E-05	1.82E-05	5.33E-06	3.31E-03	2.14E-05	---	3.08E-06
I-134	8.69E-07	1.78E-06	6.33E-07	4.15E-05	1.99E-06	---	1.84E-06
I-135	3.64E-06	7.24E-06	2.64E-06	6.49E-04	8.07E-06	---	2.62E-06
Cs-134	3.77E-04	7.03E-04	7.10E-05	---	1.81E-04	7.42E-05	1.91E-06
Cs-136	4.59E-05	1.35E-04	5.04E-05	---	5.38E-05	1.10E-05	2.05E-06
Cs-137	5.22E-04	6.11E-04	4.33E-05	---	1.64E-04	6.64E-05	1.91E-06
Cs-138	4.81E-07	7.82E-07	3.79E-07	---	3.90E-07	6.09E-08	1.25E-06
Ba-139	8.81E-07	5.84E-10	2.55E-08	---	3.51E-10	3.54E-10	5.58E-05
Ba-140	1.71E-04	1.71E-07	8.81E-06	---	4.06E-08	1.05E-07	4.20E-05
Ba-141	4.25E-07	2.91E-10	1.34E-08	---	1.75E-10	1.77E-10	5.19E-06
Ba-142	1.84E-07	1.53E-10	9.06E-09	---	8.81E-11	9.26E-11	7.59E-07
La-140	2.11E-08	8.32E-09	2.14E-09	---	---	---	9.77E-05
La-142	1.10E-09	4.04E-10	9.67E-11	---	---	---	6.86E-05
Ce-141	7.87E-08	4.80E-08	5.65E-09	---	1.48E-08	---	2.48E-05
Ce-143	1.48E-08	9.82E-06	1.12E-09	---	2.86E-09	---	5.73E-05
Ce-144	2.98E-06	1.22E-06	1.67E-07	---	4.93E-07	---	1.71E-04
Pr-143	8.13E-08	3.04E-08	4.03E-09	---	1.13E-08	---	4.29E-05
Pr-144	2.74E-10	1.06E-10	1.38E-11	---	3.84E-11	---	4.93E-06
Nd-147	5.53E-08	5.68E-08	3.48E-09	---	2.19E-08	---	3.60E-05
W-187	9.03E-07	6.28E-07	2.17E-07	---	---	---	3.69E-05
Np-239	1.11E-08	9.93E-10	5.61E-10	---	1.98E-09	---	2.87E-05

Table 17 - Recommended Values for Other Parameters

Parameter Symbol	Definition	Values
f_g	Fraction of ingested produce grown in garden of interest.	0.76
f_ℓ	Fraction of leafy vegetables grown in garden of interest.	1.0
P	Effective surface density of soil (assumes a 15 cm plow layer, expressed in dry weight)	240 kg/m^2
r	Fraction of deposited activity retained on crops, leafy vegetables, or pasture grass	0.25 1.0 (iodines) 0.2 (other particulates)
S_f	Attenuation factor accounting for shielding provided by residential structures	0.7 (maximum individual) 0.5 (general population)
t_b	Period of long-term buildup for activity in sediment or soil (nominally 15 years)	1.31×10^5 hr
t_e	Period of crop, leafy vegetable, or pasture grass exposure during growing season	30 days (grass-cow-milk-man pathway) 60 days (crop/vegetation-man pathway)
t_f	Transport time from animal feed-milk-man provided by residential structures	2 days (maximum individual) 4 days (general population)
t_h	Time delay between harvest of vegetation or crops and ingestion:	
	• For ingestion of forage by animals	Zero (pasture grass) 90 days (stored feed)
	• For ingestion of crops by man	1 day (leafy vegetables and max. individual feed) 60 days (produce and max. individual) 14 days (general population)
f_s	The fraction of daily feed that is pasture grass while the animals graze on pasture.	1.0
M_p	The mixing ratio at the point of withdrawal of drinking water.	Site Discharge 7.14 M.U.D. Intake 30.8
f_p	Fraction of the year that animals graze on pasture.	0.5

Table 17 - Recommended Values for Other Parameters

Parameter Symbol	Definition	Values
t_p	Environmental transit time, release to receptor (add time from release to exposure individual point to minimums shown for distribution)	12 hrs. (maximum) 1 day (maximum individual) 1 day (general population) 7 days (population--sport fish doses) 10 days (population--commercial fish doses)
t_s	Average time from slaughter of meat animal to consumption	20 days
Y_v	Agricultural productivity by unit area (measured in wet weight)	0.7 kg/m^2 (grass-cow-milk-man pathway) 2.0 kg/m^2 (produce or leafy vegetable ingested by man)
W	Shore-width factor for river shoreline	0.2
λ_w	Rate constant for removal of activity on plant or leaf structures by weathering (corresponds to a 14-day half-life)	0.0021 hr^{-1}

Table 18 - Estimated Doses Received by the General Public from On-Site Exposure

NOTE: The Dose Estimates are based on normal public activities conducted within the Fort Calhoun Station Site Boundary.

Location	Direction	Distance from Containment (miles)	Estimated Individual Dose Rate (mR/hour)		Estimated Total Combined Annual Dose (mRem)[2]	
			Direct Exposure (Total Body)	Inhalation (Critical Organ[1])	Direct Exposure (Total Body)	Inhalation (Critical Organ[1])
Firing Range	200°	0.24	4.08E-05	9.67E-06	5.08E+00	1.20E+00
Burn Pad	241°	0.33	1.95E-05	4.63E-06	1.41E-01	3.34E-02
On-Site Farming	118°	0.52	2.12E-05	5.03E-06	2.38E-02	5.64E-03
On-Site Farming	200°	0.51	1.03E-05	2.45E-06	2.30E-02	5.50E-03
On-Site Farming	308°	0.50	2.77E-05	6.64E-06	4.66E-02	1.12E-02
Site Maintenance Admin Bldg	145°	0.20	1.18E-04	2.84E-05	5.50E-02	1.33E-02
Site Maintenance Training Center	180°	0.20	1.45E-04	3.50E-05	6.78E-02	1.64E-02

1 Critical organ doses are based on adult thyroid.
2 Estimated totals are based on summation of all individual doses for members of the General Public while within the Fort Calhoun Station site boundary.

Fort Calhoun Station
Unit No. 1

RW-200

RADIOACTIVE WASTE

PROCESS CONTROL PROGRAM

Change No.	EC 37731
Reason for Change	This change provides requirements for Dry Fuel Storage implementation.
Requestor	M. Weeks
Preparer	P. DeAngelis
Editorial Correction (a) (b) EC 48265	All Pages (11-13-08) Page 13 and 14(02-02-10)
Issue Date	03-22-06 3:00 pm

PROCESS CONTROL PROGRAM

1. PURPOSE

1.1 To provide guidance and boundary conditions for preparation of specific procedures for processing, sampling, analyzing, packaging and shipping solid radioactive waste in accordance with State and Federal regulatory requirements.

1.2 This program is applicable to the Fort Calhoun Station Unit No. 1 solid radwaste system. Wastes considered in this program are primary and radwaste liquid processing resins, oil and filters. Dry Active Waste is only included as it applies to assurance that packaged waste is suitable for shipment and burial in accordance with applicable State and Federal regulations. Concentrates and aqueous liquids are not considered due to the present decisions not to utilize the waste evaporator as a means for processing liquid wastes.

2. RESPONSIBILITIES

2.1 The Supervisor-Radioactive Waste Operations is responsible for:

2.1.1 Maintenance of and compliance with this Process Control Program;

2.1.2 Record keeping and document control of shipping and processing data; and

2.1.3 Assuring Radwaste Personnel are appropriately trained and qualified to perform waste processing and packaging activities.

2.2 The Supervisor-Operations is responsible for:

2.2.1 Providing trained personnel to operate appropriate radwaste process equipment; and

2.2.2 Defining those Operations positions which require training.

2.3 The Manager Training is responsible for:

Development and implementation of performance-based training for designated personnel in accordance with Training Division procedures.

2.4 All OPPD and OPPD contract personnel are responsible for:

Implementation of procedures and good practices so as to provide Quality Assurance and maintain exposures ALARA.

2.5 The Nuclear Quality Assurance Department is responsible for:

2.5.1 Establishment of a Quality Assurance Program addressing Radwaste processing and packaging; and

2.5.2 Performing audits of activities associated with this Process Control Program to assure compliance with the Quality Assurance Plan.

2.6 The Plant Review Committee is responsible for:

2.6.1 Reviewing and approving changes to this Process Control Program prior to implementation of the changes; and

2.6.2 Reviewing and approving engineering and 50.59 and/or 72.48 reviews performed in support of changes to this Process Control Program.

2.7 The Station Engineering Manager is responsible for:

2.7.1 Ensuring engineering and 50.59 and/or 72.48 reviews are performed for changes made to this Process Control Program; and

2.7.2 Submitting these reviews to the Plant Review Committee for review and approval prior to implementation of the changes evaluated.

3. DEFINITIONS

3.1 Batch - An isolated quantity of feed waste to be processed having essentially constant physical and chemical characteristics. For the purpose of resin type wastes a batch is defined as the volume of resins in the Spent Resin Storage Tank or in a vendor supplied system intended to process a quantity of feed waste.

3.2 Chelating Agent - For the purpose of this program CHELATING AGENTS are amine polycarboxylic acids (e.g., EDTA, DTPA), hydroxy-carboxylic acids, and polycarboxylic acids (e.g., citric acid, carbolic acid, picolanic acid and gluconic acid) as defined in 10CFR61.2.

3.3 Low-Level Radioactive Waste (LLW) - Those low-level radioactive wastes containing source, special nuclear, or by-product material that are acceptable for disposal in a land disposal facility. For the purposes of this definition, low-level radioactive waste has the same meaning as in the Low-Level Waste policy Act, that is radioactive waste not classified as high-level radioactive waste, transuranic waste, spent nuclear fuel, or by-product material as defined in Section 11e.(2) of the Atomic Energy Act (uranium or thorium tailings and waste).

3.4 Operable - A system, subsystem, train, component or device shall be OPERABLE or have OPERABILITY when it is capable of performing its specified function(s), and when all necessary attendant instrumentation, controls, electrical power, cooling or seal water, lubrication or other auxiliary equipment that are required for the system, subsystem, train, component, or device to perform its function(s) are also capable of performing their related support function(s).

3.5 Processing - Changing, modifying, and/or packaging plant generated radioactive waste into a form that is acceptable to a disposal facility.

3.6 Quality Assurance/Quality Control - As used in this document, "quality assurance" comprises those planned and systematic actions necessary to provide adequate confidence that a structure, system, or component will perform satisfactorily in service. Quality assurance includes quality control, which comprises those quality assurance actions related to the physical characteristics of a material, structure, component, or system which provide a means to control the quality of the material, structure, component, or system to predetermined requirements.

3.7 Sampling Plan - A sampling program implemented to ensure that representative samples from the feed waste and the final waste form are obtained and tested for conformance with parameters stated in the Process Control Program and waste form acceptance criteria.

3.8 Stability - As used in this program, STABILITY means structural stability. Stability requires that the waste form maintain its structural integrity under the expected disposal conditions.

3.9 Waste Container - A vessel of any shape, size, and composition used to contain the final processed waste.

3.10 Waste Form - Waste in a waste container acceptable for disposal at a licensed disposal facility.

4. APPARATUS

None

5. PREREQUISITES

5.1 All personnel performing activities under the control of and described by this Process Control Program shall have been successfully trained and qualified to perform the described activities before actually performing the activities.

5.2 Procedures shall have been developed for implementation of this Process Control Program and shall be reviewed and approved by the Plant Review Committee prior to performing activities described and required by this Process Control Program.

6. PRECAUTIONS

None

7. PROCEDURE

7.1 WASTE TYPES

7.1.1 Primary Resin

7.1.1.A The contaminated waste product generated as a result of reactor water purification and demineralization, cation ion exchange, deborating ion exchange and spent fuel pool demineralization.

7.1.1.B Waste consists of contaminated bead ion exchange resins at varying degrees of exhaustion, small concentrations of various solids, activated and non-activated corrosion products and fission products.

7.1.2 Radwaste Liquid Processing Resin

7.1.2.A The contaminated waste product generated as a result of processing radwaste liquids using a demineralization system. This system may be vendor supplied.

7.1.2.B Waste consists of contaminated bead ion exchange resins at varying degrees of exhaustion, small concentrations of various solids, activated and non-activated corrosion products and fission products.

7.1.3 Filters

7.1.3.A The contaminated waste product generated as a result of liquid processing activities and the removal of cartridge elements from the processing systems.

7.1.3.B Waste consists of contaminated mechanical filtration cartridges containing various amounts of particulate solids, corrosion products, activation and fission products.

7.1.4 Oil

7.1.4.A The contaminated waste product generated as a result of leakage or intentional drainage and replacement of various plant component lubricating and/or control fluids.

7.1.4.B Waste consists of contaminated oils and greases of various grades both synthetic and natural, in free form or containing various amounts of solid material.

7.1.5 Dry Active Waste

7.1.5.A The contaminated waste product generated as a result of plant maintenance and repair and routine plant operations.

7.1.5.B Waste generally consists of contaminated trash in the form of plastics, papers, wood, steel and cloth items with varying concentrations of corrosion, activation and fission products.

7.1.6 Non-Standard Wastes

7.1.6.A The contaminated waste product generated as a result of non-routine plant operation, maintenance and or repair activities.

7.1.6.B Waste consists of plant components, irradiated hardware and other specialty items contaminated with varying concentrations of corrosion, activation and fission products. The waste may also be those items which have become activated with contamination being a minimal fraction of the total radioactivity.

7.2 PROCESS DESCRIPTION

7.2.1 Primary Resin

7.2.1.A Primary resins are obtained from the demineralizer filtration system, purification ion exchangers, the cation ion exchanger, the deborating ion exchanger and the spent fuel storage pool demineralizer.

7.2.1.B The resins from the demineralizer filtration system are sluiced into a container for processing and shipment from the plant.

7.2.1.C The resins from other sources and their sluice water are collected in the spent resin storage tank.

7.2.1.D The contents of the spent resin storage tank are recirculated with sufficient liquid to keep resin flowing. Nitrogen gas is used to break up solid chunks during this recirculation process.

7.2.1.E The contents of the tank are pumped into a disposable container within a shielded shipping cask or process shield after which the contents are processed and shipped from the plant.

7.2.1.F Due to the infrequent need to dispose of spent primary resins (approximately every 2-3 years) the most efficient method of disposal is to use a vendor supplied processing system. A NRC approved container (e.g. high Integrity Container or HIC) or solidification process shall provide the required stability.

7.2.2 Radwaste Liquid Processing Resin

7.2.2.A Radwaste liquids are processed using a demineralization system in lieu of using the installed plant evaporator system.

7.2.2.B Radioactive liquids are normally transferred from the waste holdup tanks to the demineralization system using the waste holdup transfer pumps. Specific maintenance and/or decontamination activities may require the use of portable transfer pumps and hoses.

7.2.2.C The processed liquids are directed to the monitor tanks to be analyzed and discharged to the Missouri River through the overboard discharge piping.

7.2.2.D The depleted resins in the demineralization system vessels are sluiced from the demineralizer vessels into a container which will provide the required stability either through design (HIC) or by solidification.

7.2.2.E Multiple sluices may be performed to fill the container.

7.2.2.F Once the container is filled, processed and stabilized; the waste will be shipped for disposal.

7.2.3 Filters

7.2.3.A Used filter cartridges originate from the purification filters, the waste filters, the spent fuel pool cooling system filter, ultrasonic cleaning unit, laundry machines and various other decontamination equipment.

7.2.3.B Filters are removed from their respective system and permitted to drain excess liquids from the elements.

7.2.3.C The filters are then transferred in a container for disposal.

7.2.3.C.1) When stabilization is required, (i.e. Class B or C) the filters shall be disposed of in a HIC or shall be solidified.

7.2.4 Oil

7.2.4.A Oil generated during operation and maintenance is collected in containers in appropriate approved areas of the plant.

7.2.4.B The filled and labeled containers are sealed and moved to available areas for temporary storage.

7.2.4.C Oils may be shipped off site to a contracted and licensed vendor for processing or incineration.

7.2.5 Dry Active Waste

7.2.5.A Dry Active Wastes are collected from radiologically controlled areas throughout the plant.

7.2.5.B The waste is sorted to remove reusable and wet items.

7.2.5.C The contaminated waste material is then either compacted into metal 55 gallon drums in the waste baler, packaged in metal boxes, or placed into a seal/land container for shipment to a process facility. Contaminated waste will be disposed of by an approved burial site or processed (e.g. incinerated, etc.) by an approved vendor.

7.2.6 Non-Standard Waste

7.2.6.A Reactor components and irradiated hardware are waste which are not routinely generated.

7.2.6.B These types of non-standard waste will be handled on a case-by-case basis through the implementation of special procedures approved by the Plant Review Committee.

7.3 PROCESS CONTROL

7.3.1 Radioactive waste processing instrumentation and equipment shall be subject to formal calibration and preventative maintenance programs.

7.3.2 Primary and Radwaste Liquid Processing Resin

7.3.2.A Primary resins will be transferred into containers for processing using plant installed and vendor supplied equipment.

7.3.2.B Radwaste Liquid Processing will be performed using a vendor supplied system with transfer of depleted resins from the demineralizer vessels into a processing container by means of sluicing.

7.3.2.C Primary and Radwaste Liquid Processing Resin dewatering will be performed using an NRC and PRC approved Process Control Program.

7.3.2.D Referenced Radwaste Procedures controlling the processing, transfer and dewatering activities shall be observed.

7.3.2.E The Process Control Program which specifically controls processing of the waste (i.e. the vendors PCP) shall identify the mechanisms and frequency of test/measurements used to verify stability and free standing liquid requirements are satisfied.

7.3.2.F Successful completion of applicable portions of the vendor Process Control Program shall serve as an indicator of system operability.

7.3.2.G Containers used for dewatering and packaging for disposal at the Barnwell disposal facility shall be approved for use and disposal by the South Carolina Department of Health and Environmental Control.

7.3.2.H The vendor supplied system shall be operated in accordance with the system operating procedures and applicable station Radwaste Procedures.

7.3.2.I Station to vendor interfacing is addressed in the safety assessment for the processing and dewatering operations.

7.3.3 Filters

7.3.3.A Filter processing is controlled by referenced Radwaste Procedures.

7.3.3.B Filters requiring stability are packaged as described in Section 7.2.3. The containers and/or process used shall be approved by the South Carolina Department of Health and Control.

7.3.4 Oil

Processing of oil shall be performed in accordance with referenced Radwaste Procedures and applicable vendor procedures and topical reports for the methodology applied to the processing activity.

7.3.5 Dry Active Waste

Dry Active Waste is processed in accordance with referenced Radwaste Procedures.

7.3.6 Non-Standard Waste

Non-Standard Waste is processed in accordance with special Radwaste Procedures germane to the specific non-standard waste being processed.

7.4 PRODUCT CONTROL

7.4.1 A sample from each batch of waste shall be analyzed quantitatively for activity and isotopic identity as required in station procedures. If radionuclide distributions are shown to be consistent between similar batches, consideration may be given to decreasing the frequency of routine measurements. Frequency of sampling is as described in Radiation Protection Procedure RW-221, "10CFR61 Sampling". This constitutes the sampling plan.

7.4.2 Scaling factors for nuclides which are hard to identify are established for waste streams by using analyses performed and provided by an off-site vendor.

7.4.3 This frequency of sampling shall be raised or lowered based upon consideration of waste stream or radionuclide characteristics. Factors which would influence this consideration include the frequency of process vessel changeout or waste shipment, the difficulty (e.g. Costs, occupational exposures) in obtaining a representative sample of a particular waste stream, the variability of the radionuclide distribution within the waste stream over time, and the availability of analytical capability for particular radionuclides. If radionuclide distributions are shown to be consistent between similar batches, consideration may be given to decreasing the frequency of routine measurements. If onsite samples show a variation from presently used scaling factors by more than a factor of 10, samples will be sent offsite for analysis to establish new scaling factors.

7.4.4 Radionuclide concentrations and classification of future waste shipments are expected to be similar to those of previous shipments for each specific waste stream. Values are available from shipment manifest forms.

7.4.5 Administrative controls for preventing unsatisfactory waste forms from being released for shipment are described in referenced station procedures.

7.4.6 Referenced Radwaste Procedures ensure wastes shall have no detectable free standing liquids. No detectable free standing liquid is defined as low as practical but not more than 1% of the volume of the waste when the waste is in a disposable container designed to ensure stability or not more than 0.5% of the volume of the waste for waste processed in any other container.

7.4.7 Processed resin shall be sampled in accordance with regulatory guidance and referenced station procedures to verify that the free liquid content of the packaged product is within limits established by applicable regulatory agencies. Sampling and measurement of free liquid content shall be performed whenever process changes occur that may significantly alter system performance, until compliance with moisture content limits under these conditions can be demonstrated.

7.4.8 Each waste shipment shall be accompanied by a shipping manifest giving a physical description of the waste, the volume, the radionuclide identity and quantity, the total radioactivity, the principal chemical form and waste class, based on 10CFR61.55.

7.4.9 Sufficient analysis shall be performed to verify that the quality of waste forms prepared for disposal by vendor's onsite processing shall be similar to vendor's test results.

7.5 TRAINING

7.5.1 Processing of solid radioactive waste shall be performed by qualified and trained personnel.

7.5.2 Training records of processing personnel shall be maintained by the Training Division.

7.5.3 Training and qualification records for operators of mobile vendor processing units shall be maintained by the Supervisor-Radioactive Waste Operations while the vendor is active on site. These records shall be sent to the Nuclear Records Management System after the vendor has completed work on site.

7.6 PROCEDURE CONTROL

7.6.1 On site processing of radioactive waste shall be performed in accordance with approved station procedures.

7.6.2 Processing of radioactive waste by onsite vendors shall be performed in accordance with applicable Process Control Programs, procedures and applicable NRC guidance.

7.6.3 Procedures for processing, containerization and transport of wastes shall ensure that specific DOT, 10CFR and burial site requirements are satisfied.

7.6.4 Process Control Programs for specific radwaste systems supplied by vendors for on site processing shall be presented to the Plant Review Committee for review and approval prior to use of the system.

7.7 RECORDS

7.7.1 Waste classification records, waste form records and other records required for the preparation of the Fort Calhoun Station Unit No. 1 Annual Radioactive Effluent Release Report shall be prepared and retained in accordance with the requirements of 10CFR20, 10CFR71, 10CFR72, 49CFR170-178 and the Fort Calhoun Station Technical Specifications.

7.7.2 Records of processing data, test and analysis results and results of training, inspection and audits are retained in accordance with the Fort Calhoun Station Quality Assurance Plan and applicable station Administrative Procedures.

7.7.3 All certificates of compliance, licenses, criteria and regulations pertaining to processing, packaging, shipment and disposal of radioactive materials controlled under this Process Control Program shall be maintained in the most current status. OPPD, Fort Calhoun Station Unit No. 1 shall be currently registered, as necessary, to use applicable packagings.

7.7.4 Sufficient documentation shall be maintained to demonstrate compliance of solid radwaste processing with this Process Control Program.

7.8 QUALITY ASSURANCE

7.8.1 Quality Assurance shall be maintained as defined by the Fort Calhoun Station Quality Assurance Plan, Section 11.

7.8.2 The QA Plan shall ensure compliance with NRC and burial site criteria for waste classification and waste form.

7.8.3 Audits shall be conducted in accordance with NQA Audit Section Instructions.

7.8.4 The Topical Reports of vendor supplied radwaste processing systems shall undergo review either by the Supervisor-Radioactive Waste Operations or the Manager-Radiation Protection. The review shall ensure the vendor supplied system will be compatible with plant operations and that the Topical report has been submitted to the NRC for review. The review shall be documented by a memo addressed to file.

7.8.5 Audits of a sampling of implementing procedures shall be performed at least once every 24 months. Procedures should be reviewed to ensure continual compliance with the requirements and process parameters of this Process Control Program.

7.8.6 Radioactive wastes not described within this document must be evaluated and approved for inclusion in this Process Control Program or in a vendor Process Control Program prior to processing.

7.9 REVISIONS

7.9.1 Changes or modifications made to design and/or operation of radioactive waste processing, treatment and/or packaging systems or activities, as described within this Process Control Program, shall require formal engineering evaluation and performance of a 50.59 and/or 72.48 review in accordance with 10CFR50.59, 10CFR72 and USNRC IE Circular No. 80-18.

7.9.2 Changes made to this Process Control Program and supporting engineering, 50.59 and/or 72.48 reviews shall be reviewed and approved by the Plant review Committee prior to implementing the changes.

7.9.3 Changes to the Process Control Program approved by the Plant Review Committee shall be submitted to the Nuclear Engineer-In-Charge of Licensing, for input to the Annual Radioactive Effluent Release Report.

8. REFERENCES/COMMITMENT DOCUMENTS

8.1 RW-201, Control of Containers

8.2 RW-202, Collection/Sorting/Segregation of Dry Active Waste (DAW)

8.3 RW-204, Packaging Non-Compactable Dry Active Waste

8.4 RW-206, Transfer of Spent Primary Resin to Disposal Containers

8.5 RW-207, Operation of the Fix Radwaste Liquid Processing System

8.6 RW-208, Transfer of Spent Fix System Resin to Disposal Containers

8.7 RW-209, Dewatering Spent Radwaste Liquid Processing Resin and Primary Resin in Disposal Containers

8.8 RW-211, Storage of Filters From Radwaste Systems

8.9 RW-212, Loading HIC Overpacks

8.10 RW-214, Collection of Oils

8.11 RW-215, Processing of Contaminated Oils

8.12 RW-216, Testing of Sorbent Materials

8.13 RW-218, 10CFR61 Classification

8.14 RW-221, 10CFR61 Sampling

8.15 49CFR Parts 170 through 178

8.16 10CFR Parts 20, 50, 61, 71, and 72

8.17 USNRC IE Circular No. 80-18

8.18 USNRC Low Level Waste Licensing Branch; Technical Position on Radioactive Waste Classification, Current Revision

8.19 USNRC Low Level Waste Licensing Branch; Technical Position on Waste Form, Current Revision

8.20 South Carolina Department of Health and Environmental Control Radioactive Material License No. 097, Current Revision

8.21 Barnwell Special Nuclear Material License No. 12-13536-01, issued to Chem-Nuclear Systems, Inc.

8.22 Barnwell Site Disposal Criteria, (Chem-Nuclear Systems, Inc.) November 1982

8.23 Current Vendor Processing Topical Report

8.24 Current Vendor Operating Procedures as referenced in RW-207

8.25 FCS Quality Assurance Plan, Section 11.1 and 11.2

8.26 Fort Calhoun Station Unit No. 1, Updated Safety Analysis Report

8.27 Fort Calhoun Station Unit No. 1 Technical Specifications Sections 5.18 and 5.9.4

9. ATTACHMENTS

None

SECTION VII

ATTACHMENT 2

JOINT FREQUENCY DISTRIBUTION WIND DIRECTION VS. WIND SPEED
BY STABILITY CLASS AND METEOROLOGICAL DATA

(Regulatory Guide 1.21)

January 1, 2010 - December 31, 2010

JOINT FREQUENCY DISTRIBUTION WIND DIRECTION VS. WIND SPEED BY STABILITY CLASS AND METEOROLOGICAL DATA

A. Meteorological Data Recovery

Data availability from the on-site weather tower for the period January 1, 2010 through December 31, 2010 was less than the previous 12 months. The regulatory guide recovery was met with a cumulative recovery rate of 94.50% from the meteorological tower with the remaining 5.48% provided by the National Weather Service. The following table is a summary of the parameters and their respective recovery rates for the period.

Hourly meteorological data used to replace missing tower data for the period January 1, 2010 through December 31, 2010 originated at Eppley Airfield Weather Station, a branch of the National Weather Service. The hourly data was treated in accordance with monthly correction factors and a proceduralized Pasquill-Turner transformation which utilizes solar angle, time of day, cloud cover, and wind speed to determine the Pasquill Class.

The tabulations of the Weather Tower Data for the period January 1, 2010 through December 31, 2010 look appropriate for the season indicated. The Pasquill Classes observed for the twelve-month period are detailed below.

Pasquill Class	A	B	C	D	E	F	G	Total
% Obs.	7.88	6.39	5.34	33.40	31.08	9.74	6.16	100

On the basis of the data and its cross-checks, the weather data as amended is completely valid for use in tabulating atmospheric releases.

Omaha Public Power District
Fort Calhoun Nuclear Station
JOINT FREQUENCY DISTRIBUTION BY EVENTS
EXTREMELY UNSTABLE (delta T/ delta z < -1.9)
PERIOD OF RECORD: JAN 2010 - DEC 2010
PASQUILL A
WIND SPEED (m/s) AT 10-m LEVEL

Wind Direct	< 0.5	0.5-1.0	1.1-1.5	1.6-2.0	2.1-3.0	3.1-4.0	4.1-5.0	5.1-6.0	6.1-8.0	8.1-10.0	> 10.0	Total
N	0	0	2	4	18	18	4	3	1	0	0	50
NNE	0	0	1	2	7	5	1	0	0	0	0	16
NE	0	0	0	2	2	2	0	0	0	0	0	6
ENE	0	0	0	1	2	2	1	0	0	0	0	6
E	0	0	1	0	3	1	0	0	0	0	0	5
ESE	0	0	0	2	4	8	9	3	2	0	0	28
SE	0	0	0	1	6	4	10	5	1	0	0	27
SSE	0	0	0	1	7	7	19	20	30	3	3	90
S	0	0	0	1	6	7	20	18	25	5	0	82
SSW	0	0	0	1	9	9	10	11	19	2	0	61
SW	0	0	1	4	19	12	6	7	6	0	0	55
WSW	0	0	3	4	4	6	1	1	0	0	0	19
W	0	0	3	10	11	0	0	0	0	0	0	24
WNW	0	1	4	8	14	3	1	3	0	0	0	34
NW	0	0	4	12	26	24	11	6	6	0	0	89
NNW	0	1	0	6	34	33	15	6	3	0	0	98
Total	0	2	19	59	172	141	108	83	93	10	3	690

Number of Calms 0
Number of Invalid Hours 0
Number of Valid Hours 690

Omaha Public Power District
Fort Calhoun Nuclear Station
JOINT FREQUENCY DISTRIBUTION BY EVENTS
MODERATELY UNSTABLE (-1.9 <= delta T/ delta z <= -1.7)
PERIOD OF RECORD: JAN 2010 - DEC 2010
PASQUILL B
WIND SPEED (m/s) AT 10-m LEVEL

Wind Direct	< 0.5	0.5-1.0	1.1-1.5	1.6-2.0	2.1-3.0	3.1-4.0	4.1-5.0	5.1-6.0	6.1-8.0	8.1-10.0	> 10.0	Total
N	0	2	6	16	30	15	3	0	1	0	0	73
NNE	0	0	2	13	10	4	0	0	0	0	0	30
NE	0	0	4	3	6	2	0	0	0	0	0	15
ENE	0	0	2	3	2	1	2	0	0	0	0	10
E	0	2	0	2	12	5	0	1	0	0	0	22
ESE	0	0	0	4	6	5	3	2	0	0	0	20
SE	0	0	2	1	5	7	13	6	6	0	0	40
SSE	0	0	0	3	12	5	9	7	19	1	3	59
S	0	1	0	2	10	8	17	19	19	5	0	81
SSW	0	1	3	3	9	8	10	7	5	1	0	48
SW	0	1	2	3	2	5	4	3	1	0	0	21
WSW	0	0	2	4	1	1	0	0	0	0	0	8
W	0	3	2	4	3	0	1	2	0	0	0	15
WNW	0	1	2	0	2	3	0	2	0	0	0	10
NW	0	1	1	8	5	4	6	5	4	0	0	34
NNW	0	1	2	4	31	22	10	2	2	0	0	74
Total	0	13	30	73	146	95	78	56	57	7	3	558

Number of Calms 2
Number of Invalid Hours 0
Number of Valid Hours 560

Omaha Public Power District
Fort Calhoun Nuclear Station
JOINT FREQUENCY DISTRIBUTION BY EVENTS
SLIGHTLY UNSTABLE (-1.7 < delta T/ delta z <= -1.5)
PERIOD OF RECORD: JAN 2010 - DEC 2010
PASQUILL C
WIND SPEED (m/s) AT 10-m LEVEL

Wind Direct	< 0.5	0.5-1.0	1.1-1.5	1.6-2.0	2.1-3.0	3.1-4.0	4.1-5.0	5.1-6.0	6.1-8.0	8.1-10.0	> 10.0	Total
N	0	3	7	16	22	6	3	1	0	0	0	62
NNE	0	1	2	4	7	1	0	0	0	0	0	15
NE	0	0	3	7	4	0	0	0	0	0	0	14
ENE	0	0	2	4	2	1	1	0	0	0	0	10
E	0	0	2	5	14	1	3	0	0	0	0	25
ESE	0	0	3	6	6	4	4	2	0	0	0	29
SE	0	1	0	2	7	6	11	2	1	0	0	32
SSE	0	1	0	3	11	7	7	9	7	3	0	49
S	0	1	0	3	9	9	17	10	4	7	0	61
SSW	0	0	3	0	7	5	6	5	4	0	1	32
SW	0	0	0	0	3	2	4	0	1	0	0	10
WSW	0	0	0	3	2	0	0	0	0	0	0	5
W	0	1	5	1	2	3	4	0	0	0	0	16
WNW	0	0	3	1	0	2	2	1	1	0	0	10
NW	0	2	3	1	4	6	6	3	1	0	0	26
NNW	0	3	5	10	22	17	8	3	3	0	0	72
Total	0	13	38	66	122	70	76	36	22	10	1	454

Number of Calms 14
Number of Invalid Hours 0
Number of Valid Hours 468

Omaha Public Power District
Fort Calhoun Nuclear Station
JOINT FREQUENCY DISTRIBUTION BY EVENTS
NEUTRAL (-1.5 < delta T/ delta z <= -0.5)
PERIOD OF RECORD: JAN 2010 - DEC 2010
PASQUILL D
WIND SPEED (m/s) AT 10-m LEVEL

Wind Direct	< 0.5	0.5-1.0	1.1-1.5	1.6-2.0	2.1-3.0	3.1-4.0	4.1-5.0	5.1-6.0	6.1-8.0	8.1-10.0	> 10.0	Total
N	0	10	42	67	70	41	12	2	0	1	0	250
NNE	0	32	37	32	31	10	1	1	0	0	0	144
NE	1	20	32	31	30	7	2	1	0	0	0	124
ENE	2	13	26	31	47	14	4	0	0	0	0	137
E	1	6	11	30	31	15	2	1	0	0	0	97
ESE	0	9	9	25	68	28	14	8	2	0	0	164
SE	0	10	11	27	58	74	56	52	29	7	0	324
SSE	1	3	9	11	37	57	64	54	46	18	2	303
S	1	3	6	8	20	24	29	42	44	6	2	185
SSW	0	2	3	4	19	8	14	9	15	2	0	77
SW	0	4	5	7	7	5	6	1	2	1	0	38
WSW	0	3	4	2	5	3	4	2	0	0	0	23
W	2	8	8	5	8	6	2	0	1	0	0	40
WNW	0	8	12	8	19	21	14	1	4	0	0	87
NW	1	8	12	14	59	81	59	54	45	8	1	342
NNW	1	14	51	60	185	147	89	26	14	3	1	591
Total	10	153	278	362	694	541	372	254	202	46	6	2918

Number of Calms 8
Number of Invalid Hours 0
Number of Valid Hours 2926

Omaha Public Power District
Fort Calhoun Nuclear Station
JOINT FREQUENCY DISTRIBUTION BY EVENTS
SLIGHTLY STABLE (-0.5 < delta T/ delta z <= 1.5)
PERIOD OF RECORD: JAN 2010 - DEC 2010
PASQUILL E
WIND SPEED (m/s) AT 10-m LEVEL

Wind Direct	< 0.5	0.5-1.0	1.1-1.5	1.6-2.0	2.1-3.0	3.1-4.0	4.1-5.0	5.1-6.0	6.1-8.0	8.1-10.0	> 10.0	Total
N	0	22	25	12	15	9	2	0	0	0	0	85
NNE	7	25	12	9	8	1	0	0	0	0	0	62
NE	4	30	25	12	6	1	1	0	0	0	0	79
ENE	1	22	18	28	17	1	1	0	0	0	0	88
E	0	24	31	18	18	7	0	0	0	0	0	98
ESE	1	8	29	50	39	26	16	3	0	0	0	172
SE	4	24	40	46	102	73	51	19	10	2	0	371
SSE	1	16	9	19	75	90	67	53	47	8	0	385
S	4	11	16	14	35	48	59	52	47	6	2	294
SSW	0	7	10	8	17	18	14	8	21	2	0	105
SW	2	12	7	6	11	11	6	2	3	2	0	62
WSW	4	14	5	9	17	8	7	0	0	0	0	64
W	6	39	22	14	19	9	0	0	1	0	0	110
WNW	4	41	31	16	27	6	1	0	0	0	0	126
NW	3	60	48	55	90	32	10	0	5	0	0	303
NNW	2	41	49	57	107	43	16	4	0	0	0	319
Total	43	396	377	373	603	383	251	141	134	20	2	2723

Number of Calms 0
Number of Invalid Hours 0
Number of Valid Hours 2723

Omaha Public Power District
Fort Calhoun Nuclear Station
JOINT FREQUENCY DISTRIBUTION BY EVENTS
MODERATELY STABLE (1.5 < delta T/ delta z <= 4.0)
PERIOD OF RECORD: JAN 2010 - DEC 2010
PASQUILL F
WIND SPEED (m/s) AT 10-m LEVEL

Wind Direct	< 0.5	0.5-1.0	1.1-1.5	1.6-2.0	2.1-3.0	3.1-4.0	4.1-5.0	5.1-6.0	6.1-8.0	8.1-10.0	> 10.0	Total
N	1	10	6	2	0	0	0	0	0	0	0	32
NNE	3	4	2	0	0	0	0	0	0	0	0	9
NE	2	13	1	1	0	1	0	0	0	0	0	18
ENE	5	8	2	3	0	0	0	0	0	0	0	18
E	1	10	5	2	3	1	0	0	0	0	0	22
ESE	2	22	12	20	5	0	0	0	0	0	0	69
SE	4	20	19	15	30	13	3	3	0	0	0	109
SSE	5	22	13	7	30	9	3	1	0	0	0	92
S	7	17	6	4	4	9	3	0	1	0	0	53
SSW	7	14	0	1	4	4	4	4	0	0	0	38
SW	15	16	3	0	3	4	1	1	0	0	0	43
WSW	15	17	4	2	2	0	0	0	0	0	0	40
W	25	38	8	2	3	0	1	0	0	0	0	77
WNW	13	66	32	9	4	0	0	0	0	0	0	125
NW	6	30	21	16	9	1	0	0	0	0	0	83
NNW	5	14	3	2	1	0	0	0	0	0	0	25
Total	116	321	137	86	98	42	15	9	1	0	0	825

Number of Calms 28
Number of Invalid Hours 0
Number of Valid Hours 853

Omaha Public Power District
Fort Calhoun Nuclear Station
JOINT FREQUENCY DISTRIBUTION BY EVENTS
EXTREMELY STABLE (delta T/ delta z > 4.0)
PERIOD OF RECORD: JAN 2010 - DEC 2010
PASQUILL G
WIND SPEED (m/s) AT 10-m LEVEL

Wind Direct	< 0.5	0.5-1.0	1.1-1.5	1.6-2.0	2.1-3.0	3.1-4.0	4.1-5.0	5.1-6.0	6.1-8.0	8.1-10.0	> 10.0	Total
N	4	3	0	0	0	0	0	0	0	0	0	7
NNE	8	7	0	1	0	0	0	0	0	0	0	16
NE	8	12	1	0	0	0	0	0	0	0	0	21
ENE	10	12	1	0	0	0	0	0	0	0	0	23
E	11	21	1	1	0	0	0	0	0	0	0	34
ESE	9	28	21	7	5	1	0	0	0	0	0	71
SE	9	55	16	10	0	1	1	1	0	0	0	93
SSE	7	35	4	5	3	0	0	0	0	0	0	54
S	10	22	0	1	2	1	0	0	0	0	0	36
SSW	17	21	2	2	9	6	0	0	0	0	0	57
SW	19	9	1	0	0	0	0	0	0	0	0	29
WSW	17	13	0	0	0	0	0	0	0	0	0	30
W	14	10	0	0	0	0	0	0	0	0	0	24
WNW	6	12	4	4	0	0	0	0	0	0	0	26
NW	6	6	2	0	0	0	0	0	0	0	0	14
NNW	2	2	1	0	0	0	0	0	0	0	0	5
Total	157	268	54	31	19	9	1	1	0	0	0	540

Number of Calms 0
Number of Invalid Hours 0
Number of Valid Hours 540

Hours Accounted For: 8760

Omaha Public Power District
Fort Calhoun Nuclear Station
JOINT FREQUENCY DISTRIBUTION BY PERCENT
EXTREMELY UNSTABLE (delta T/ delta z < -1.9)
PERIOD OF RECORD: JAN 2010 - DEC 2010
PASQUILL A
WIND SPEED (m/s) AT 10-m LEVEL

Wind Direct	< 0.5	0.5-1.0	1.1-1.5	1.6-2.0	2.1-3.0	3.1-4.0	4.1-5.0	5.1-6.0	6.1-8.0	8.1-10.0	> 10.0	Total
N	0.00	0.00	0.02	0.05	0.21	0.21	0.05	0.03	0.01	0.00	0.00	0.57
NNE	0.00	0.00	0.01	0.02	0.08	0.06	0.01	0.00	0.00	0.00	0.00	0.18
NE	0.00	0.00	0.00	0.02	0.02	0.02	0.00	0.00	0.00	0.00	0.00	0.07
ENE	0.00	0.00	0.00	0.01	0.02	0.02	0.01	0.00	0.00	0.00	0.00	0.07
E	0.00	0.00	0.01	0.00	0.03	0.01	0.00	0.00	0.00	0.00	0.00	0.06
ESE	0.00	0.00	0.00	0.02	0.05	0.09	0.10	0.03	0.02	0.00	0.00	0.32
SE	0.00	0.00	0.00	0.01	0.07	0.05	0.11	0.06	0.01	0.00	0.00	0.31
SSE	0.00	0.00	0.00	0.01	0.08	0.08	0.22	0.23	0.34	0.03	0.03	1.03
S	0.00	0.00	0.00	0.01	0.07	0.08	0.23	0.21	0.29	0.06	0.00	0.94
SSW	0.00	0.00	0.00	0.01	0.10	0.10	0.11	0.13	0.22	0.02	0.00	0.70
SW	0.00	0.00	0.01	0.05	0.22	0.14	0.07	0.08	0.07	0.00	0.00	0.63
WSW	0.00	0.00	0.03	0.05	0.05	0.07	0.01	0.01	0.00	0.00	0.00	0.22
W	0.00	0.00	0.03	0.11	0.13	0.00	0.00	0.00	0.00	0.00	0.00	0.27
WNW	0.00	0.01	0.05	0.09	0.16	0.03	0.01	0.03	0.00	0.00	0.00	0.39
NW	0.00	0.00	0.05	0.14	0.30	0.27	0.13	0.07	0.07	0.00	0.00	1.02
NNW	0.00	0.01	0.00	0.07	0.39	0.38	0.17	0.07	0.03	0.00	0.00	1.12
Total	0.00	0.02	0.22	0.67	1.96	1.61	1.23	0.95	1.06	0.11	0.03	7.88

Percent of Calms 0.00
Percent of Invalid Hours 0.00
Percent of Valid Hours 7.88

Omaha Public Power District
Fort Calhoun Nuclear Station
JOINT FREQUENCY DISTRIBUTION BY PERCENT
MODERATELY UNSTABLE (-1.9 <= delta T/ delta z <= -1.7)
PERIOD OF RECORD: JAN 2010 - DEC 2010
PASQUILL B
WIND SPEED (m/s) AT 10-m LEVEL

Wind Direct	< 0.5	0.5- 1.0	1.1- 1.5	1.6- 2.0	2.1- 3.0	3.1- 4.0	4.1- 5.0	5.1- 6.0	6.1- 8.0	8.1- 10.0	> 10.0	Total
N	0.00	0.02	0.07	0.18	0.34	0.17	0.03	0.00	0.01	0.00	0.00	0.83
NNE	0.00	0.00	0.02	0.15	0.11	0.05	0.00	0.00	0.00	0.00	0.00	0.34
NE	0.00	0.00	0.05	0.03	0.07	0.02	0.00	0.00	0.00	0.00	0.00	0.17
ENE	0.00	0.00	0.02	0.03	0.02	0.01	0.02	0.00	0.00	0.00	0.00	0.11
E	0.00	0.02	0.00	0.02	0.14	0.06	0.00	0.01	0.00	0.00	0.00	0.25
ESE	0.00	0.00	0.00	0.05	0.07	0.06	0.03	0.02	0.00	0.00	0.00	0.23
SE	0.00	0.00	0.02	0.01	0.06	0.08	0.15	0.07	0.07	0.00	0.00	0.46
SSE	0.00	0.00	0.00	0.03	0.14	0.06	0.10	0.08	0.22	0.01	0.03	0.67
S	0.00	0.01	0.00	0.02	0.11	0.09	0.19	0.22	0.22	0.06	0.00	0.92
SSW	0.00	0.01	0.03	0.03	0.10	0.09	0.11	0.08	0.06	0.01	0.00	0.55
SW	0.00	0.01	0.02	0.03	0.02	0.06	0.05	0.03	0.01	0.00	0.00	0.24
WSW	0.00	0.00	0.02	0.05	0.01	0.01	0.00	0.00	0.00	0.00	0.00	0.09
W	0.00	0.03	0.02	0.05	0.03	0.00	0.01	0.02	0.00	0.00	0.00	0.17
WNW	0.00	0.01	0.02	0.00	0.02	0.03	0.00	0.02	0.00	0.00	0.00	0.11
NW	0.00	0.01	0.01	0.09	0.06	0.05	0.07	0.06	0.05	0.00	0.00	0.39
NNW	0.00	0.01	0.02	0.05	0.35	0.25	0.11	0.02	0.02	0.00	0.00	0.84
Total	0.00	0.15	0.34	0.83	1.67	1.08	0.89	0.64	0.65	0.08	0.03	6.37

Percent of Calms 0.02
Percent of Invalid Hours 0.00
Percent of Valid Hours 6.39

Omaha Public Power District
Fort Calhoun Nuclear Station
JOINT FREQUENCY DISTRIBUTION BY PERCENT
SLIGHTLY UNSTABLE (-1.7 < delta T/ delta z <= -1.5)
PERIOD OF RECORD: JAN 2010 - DEC 2010
PASQUILL C
WIND SPEED (m/s) AT 10-m LEVEL

Wind Direct	< 0.5	0.5-1.0	1.1-1.5	1.6-2.0	2.1-3.0	3.1-4.0	4.1-5.0	5.1-6.0	6.1-8.0	8.1-10.0	> 10.0	Total
N	0.00	0.03	0.08	0.18	0.25	0.07	0.03	0.01	0.00	0.00	0.00	0.71
NNE	0.00	0.01	0.02	0.05	0.08	0.01	0.00	0.00	0.00	0.00	0.00	0.17
NE	0.00	0.00	0.03	0.08	0.05	0.00	0.00	0.00	0.00	0.00	0.00	0.16
ENE	0.00	0.00	0.02	0.05	0.02	0.01	0.01	0.00	0.00	0.00	0.00	0.11
E	0.00	0.00	0.02	0.06	0.16	0.01	0.03	0.00	0.00	0.00	0.00	0.29
ESE	0.00	0.00	0.03	0.07	0.07	0.05	0.05	0.02	0.00	0.00	0.00	0.33
SE	0.00	0.01	0.00	0.02	0.08	0.07	0.13	0.02	0.01	0.00	0.00	0.37
SSE	0.00	0.01	0.00	0.03	0.13	0.08	0.08	0.10	0.08	0.03	0.00	0.56
S	0.00	0.01	0.00	0.03	0.10	0.10	0.19	0.11	0.05	0.08	0.00	0.70
SSW	0.00	0.00	0.03	0.00	0.08	0.06	0.07	0.06	0.05	0.00	0.01	0.37
SW	0.00	0.00	0.00	0.00	0.03	0.02	0.05	0.00	0.01	0.00	0.00	0.11
WSW	0.00	0.00	0.00	0.03	0.02	0.00	0.00	0.00	0.00	0.00	0.00	0.06
W	0.00	0.01	0.06	0.01	0.02	0.03	0.05	0.00	0.00	0.00	0.00	0.18
WNW	0.00	0.00	0.03	0.01	0.00	0.02	0.02	0.01	0.01	0.00	0.00	0.11
NW	0.00	0.02	0.03	0.01	0.05	0.07	0.07	0.03	0.01	0.00	0.00	0.30
NNW	0.00	0.03	0.06	0.11	0.25	0.19	0.09	0.03	0.03	0.00	0.00	0.82
Total	0.00	0.15	0.43	0.75	1.39	0.80	0.87	0.41	0.25	0.11	0.01	5.18

Percent of Calms 0.16
Percent of Invalid Hours 0.00
Percent of Valid Hours 5.34

Omaha Public Power District
Fort Calhoun Nuclear Station
JOINT FREQUENCY DISTRIBUTION BY PERCENT
NEUTRAL (-1.5 < delta T/ delta z <= -0.5)
PERIOD OF RECORD: JAN 2010 - DEC 2010
PASQUILL D
WIND SPEED (m/s) AT 10-m LEVEL

Wind Direct	< 0.5	0.5-1.0	1.1-1.5	1.6-2.0	2.1-3.0	3.1-4.0	4.1-5.0	5.1-6.0	6.1-8.0	8.1-10.0	> 10.0	Total
N	0.00	0.11	0.48	0.76	0.80	0.47	0.14	0.02	0.00	0.01	0.00	2.85
NNE	0.00	0.37	0.42	0.37	0.35	0.11	0.01	0.01	0.00	0.00	0.00	1.64
NE	0.01	0.23	0.37	0.35	0.34	0.08	0.02	0.01	0.00	0.00	0.00	1.42
ENE	0.02	0.15	0.30	0.35	0.54	0.16	0.05	0.00	0.00	0.00	0.00	1.56
E	0.01	0.07	0.13	0.34	0.35	0.17	0.02	0.01	0.00	0.00	0.00	1.11
ESE	0.00	0.10	0.10	0.29	0.78	0.32	0.16	0.09	0.02	0.00	0.00	1.87
SE	0.00	0.11	0.13	0.31	0.66	0.84	0.64	0.59	0.33	0.08	0.00	3.70
SSE	0.01	0.03	0.10	0.13	0.42	0.65	0.73	0.62	0.53	0.21	0.02	3.46
S	0.01	0.03	0.07	0.09	0.23	0.27	0.33	0.48	0.50	0.07	0.02	2.11
SSW	0.00	0.02	0.03	0.05	0.22	0.09	0.16	0.10	0.17	0.02	0.00	0.88
SW	0.00	0.05	0.06	0.08	0.08	0.06	0.07	0.01	0.02	0.01	0.00	0.43
WSW	0.00	0.03	0.05	0.02	0.06	0.03	0.05	0.02	0.00	0.00	0.00	0.26
W	0.02	0.09	0.09	0.06	0.09	0.07	0.02	0.00	0.01	0.00	0.00	0.46
WNW	0.00	0.09	0.14	0.09	0.22	0.24	0.16	0.01	0.05	0.00	0.00	0.99
NW	0.01	0.09	0.14	0.16	0.67	0.92	0.67	0.62	0.51	0.09	0.01	3.90
NNW	0.01	0.16	0.58	0.68	2.11	1.68	1.02	0.30	0.16	0.03	0.01	6.75
Total	0.11	1.75	3.17	4.13	7.92	6.18	4.25	2.90	2.31	0.53	0.07	33.31

Percent of Calms 0.09
Percent of Invalid Hours 0.00
Percent of Valid Hours 33.40

Omaha Public Power District
Fort Calhoun Nuclear Station
JOINT FREQUENCY DISTRIBUTION BY PERCENT
SLIGHTLY STABLE (-0.5 < delta T/ delta z <= 1.5)
PERIOD OF RECORD: JAN 2010 - DEC 2010
PASQUILL E
WIND SPEED (m/s) AT 10-m LEVEL

Wind Direct	< 0.5	0.5-1.0	1.1-1.5	1.6-2.0	2.1-3.0	3.1-4.0	4.1-5.0	5.1-6.0	6.1-8.0	8.1-10.0	> 10.0	Total
N	0.00	0.25	0.29	0.14	0.17	0.10	0.02	0.00	0.00	0.00	0.00	0.97
NNE	0.08	0.29	0.14	0.10	0.09	0.01	0.00	0.00	0.00	0.00	0.00	0.71
NE	0.05	0.34	0.29	0.14	0.07	0.01	0.01	0.00	0.00	0.00	0.00	0.90
ENE	0.01	0.25	0.21	0.32	0.19	0.01	0.01	0.00	0.00	0.00	0.00	1.00
E	0.00	0.27	0.35	0.21	0.21	0.08	0.00	0.00	0.00	0.00	0.00	1.12
ESE	0.01	0.09	0.33	0.57	0.45	0.30	0.18	0.03	0.00	0.00	0.00	1.96
SE	0.05	0.27	0.46	0.53	1.16	0.83	0.58	0.22	0.11	0.02	0.00	4.24
SSE	0.01	0.18	0.10	0.22	0.86	1.03	0.76	0.61	0.54	0.09	0.00	4.39
S	0.05	0.13	0.18	0.16	0.40	0.55	0.67	0.59	0.54	0.07	0.02	3.36
SSW	0.00	0.08	0.11	0.09	0.19	0.21	0.16	0.09	0.24	0.02	0.00	1.20
SW	0.02	0.14	0.08	0.07	0.13	0.13	0.07	0.02	0.03	0.02	0.00	0.71
WSW	0.05	0.16	0.06	0.10	0.19	0.09	0.08	0.00	0.00	0.00	0.00	0.73
W	0.07	0.45	0.25	0.16	0.22	0.10	0.00	0.00	0.01	0.00	0.00	1.26
WNW	0.05	0.47	0.35	0.18	0.31	0.07	0.01	0.00	0.00	0.00	0.00	1.44
NW	0.03	0.68	0.55	0.63	1.03	0.37	0.11	0.00	0.06	0.00	0.00	3.46
NNW	0.02	0.47	0.56	0.65	1.22	0.49	0.18	0.05	0.00	0.00	0.00	3.64
Total	0.49	4.52	4.30	4.26	6.88	4.37	2.87	1.61	1.53	0.23	0.02	31.08

Percent of Calms 0.00
Percent of Invalid Hours 0.00
Percent of Valid Hours 31.08

Omaha Public Power District
Fort Calhoun Nuclear Station
JOINT FREQUENCY DISTRIBUTION BY PERCENT
MODERATELY STABLE (1.5 < delta T/ delta z <= 4.0)
PERIOD OF RECORD: JAN 2010 - DEC 2010
PASQUILL F
WIND SPEED (m/s) AT 10-m LEVEL

Wind Direct	< 0.5	0.5-1.0	1.1-1.5	1.6-2.0	2.1-3.0	3.1-4.0	4.1-5.0	5.1-6.0	6.1-8.0	8.1-10.0	> 10.0	Total
N	0.01	0.11	0.07	0.02	0.00	0.00	0.00	0.00	0.00	0.00	0.00	0.37
NNE	0.03	0.05	0.02	0.00	0.00	0.00	0.00	0.00	0.00	0.00	0.00	0.10
NE	0.02	0.15	0.01	0.01	0.00	0.01	0.00	0.00	0.00	0.00	0.00	0.21
ENE	0.06	0.09	0.02	0.03	0.00	0.00	0.00	0.00	0.00	0.00	0.00	0.21
E	0.01	0.11	0.06	0.02	0.03	0.01	0.00	0.00	0.00	0.00	0.00	0.25
ESE	0.02	0.25	0.14	0.23	0.06	0.00	0.00	0.00	0.00	0.00	0.00	0.79
SE	0.05	0.23	0.22	0.17	0.34	0.15	0.03	0.03	0.00	0.00	0.00	1.24
SSE	0.06	0.25	0.15	0.08	0.34	0.10	0.03	0.01	0.00	0.00	0.00	1.05
S	0.08	0.19	0.07	0.05	0.05	0.10	0.03	0.00	0.01	0.00	0.00	0.61
SSW	0.08	0.16	0.00	0.01	0.05	0.05	0.05	0.05	0.00	0.00	0.00	0.43
SW	0.17	0.18	0.03	0.00	0.03	0.05	0.01	0.01	0.00	0.00	0.00	0.49
WSW	0.17	0.19	0.05	0.02	0.02	0.00	0.00	0.00	0.00	0.00	0.00	0.46
W	0.29	0.43	0.09	0.02	0.03	0.00	0.01	0.00	0.00	0.00	0.00	0.88
WNW	0.15	0.75	0.37	0.10	0.05	0.00	0.00	0.00	0.00	0.00	0.00	1.43
NW	0.07	0.34	0.24	0.18	0.10	0.01	0.00	0.00	0.00	0.00	0.00	0.95
NNW	0.06	0.16	0.03	0.02	0.01	0.00	0.00	0.00	0.00	0.00	0.00	0.29
Total	1.32	3.66	1.56	0.98	1.12	0.48	0.17	0.10	0.01	0.00	0.00	9.42

Percent of Calms 0.32
Percent of Invalid Hours 0.00
Percent of Valid Hours 9.74

Omaha Public Power District
Fort Calhoun Nuclear Station
JOINT FREQUENCY DISTRIBUTION BY PERCENT
EXTREMELY STABLE (delta T/ delta z > 4.0)
PERIOD OF RECORD: JAN 2010 - DEC 2010
PASQUILL G
WIND SPEED (m/s) AT 10-m LEVEL

Wind Direct	< 0.5	0.5-1.0	1.1-1.5	1.6-2.0	2.1-3.0	3.1-4.0	4.1-5.0	5.1-6.0	6.1-8.0	8.1-10.0	> 10.0	Total
N	0.05	0.03	0.00	0.00	0.00	0.00	0.00	0.00	0.00	0.00	0.00	0.08
NNE	0.09	0.08	0.00	0.01	0.00	0.00	0.00	0.00	0.00	0.00	0.00	0.18
NE	0.09	0.14	0.01	0.00	0.00	0.00	0.00	0.00	0.00	0.00	0.00	0.24
ENE	0.11	0.14	0.01	0.00	0.00	0.00	0.00	0.00	0.00	0.00	0.00	0.26
E	0.13	0.24	0.01	0.01	0.00	0.00	0.00	0.00	0.00	0.00	0.00	0.39
ESE	0.10	0.32	0.24	0.08	0.06	0.01	0.00	0.00	0.00	0.00	0.00	0.81
SE	0.10	0.63	0.18	0.11	0.00	0.01	0.01	0.01	0.00	0.00	0.00	1.06
SSE	0.08	0.40	0.05	0.06	0.03	0.00	0.00	0.00	0.00	0.00	0.00	0.62
S	0.11	0.25	0.00	0.01	0.02	0.01	0.00	0.00	0.00	0.00	0.00	0.41
SSW	0.19	0.24	0.02	0.02	0.10	0.07	0.00	0.00	0.00	0.00	0.00	0.65
SW	0.22	0.10	0.01	0.00	0.00	0.00	0.00	0.00	0.00	0.00	0.00	0.33
WSW	0.19	0.15	0.00	0.00	0.00	0.00	0.00	0.00	0.00	0.00	0.00	0.34
W	0.16	0.11	0.00	0.00	0.00	0.00	0.00	0.00	0.00	0.00	0.00	0.27
WNW	0.07	0.14	0.05	0.05	0.00	0.00	0.00	0.00	0.00	0.00	0.00	0.30
NW	0.07	0.07	0.02	0.00	0.00	0.00	0.00	0.00	0.00	0.00	0.00	0.16
NNW	0.02	0.02	0.01	0.00	0.00	0.00	0.00	0.00	0.00	0.00	0.00	0.06
Total	1.79	3.06	0.62	0.35	0.22	0.10	0.01	0.01	0.00	0.00	0.00	6.16

Percent of Calms 0.00
Percent of Invalid Hours 0.00
Percent of Valid Hours 6.16

Percent of Hours Accounted For: 100.00

Joint Frequency Distribution
2010 FCS Meterological Tower

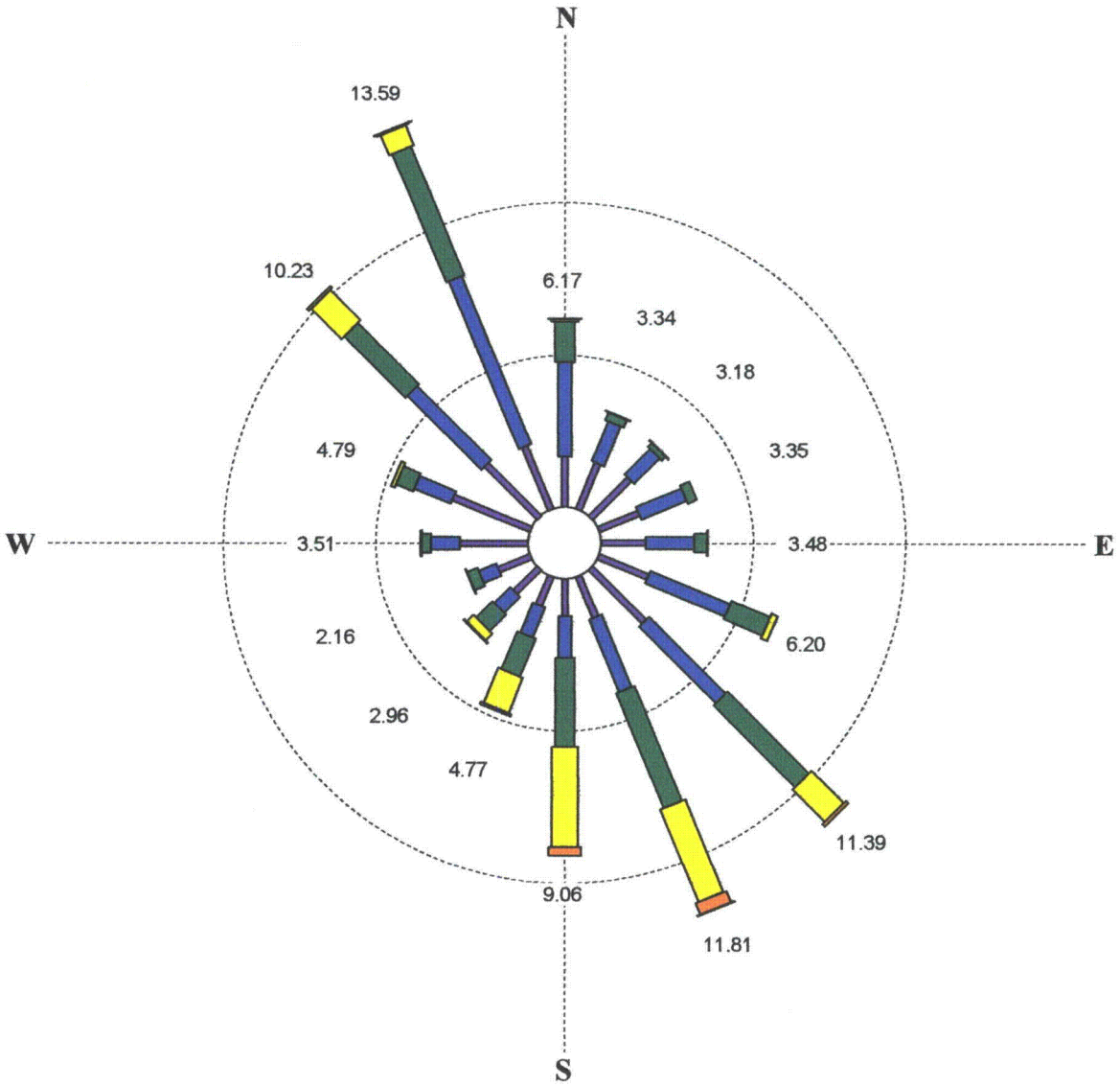

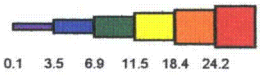

Wind Speed (Miles Per Hour)

Calms excluded.
Rings drawn at 5% intervals.
Wind flow is FROM the directions shown.
No observations were missing.