W163278

ANALYZE & MARK THIS PRINT FOR ALL SAFETY CONSIDERATIONS IN DESIGN OR CONSTRUCTION

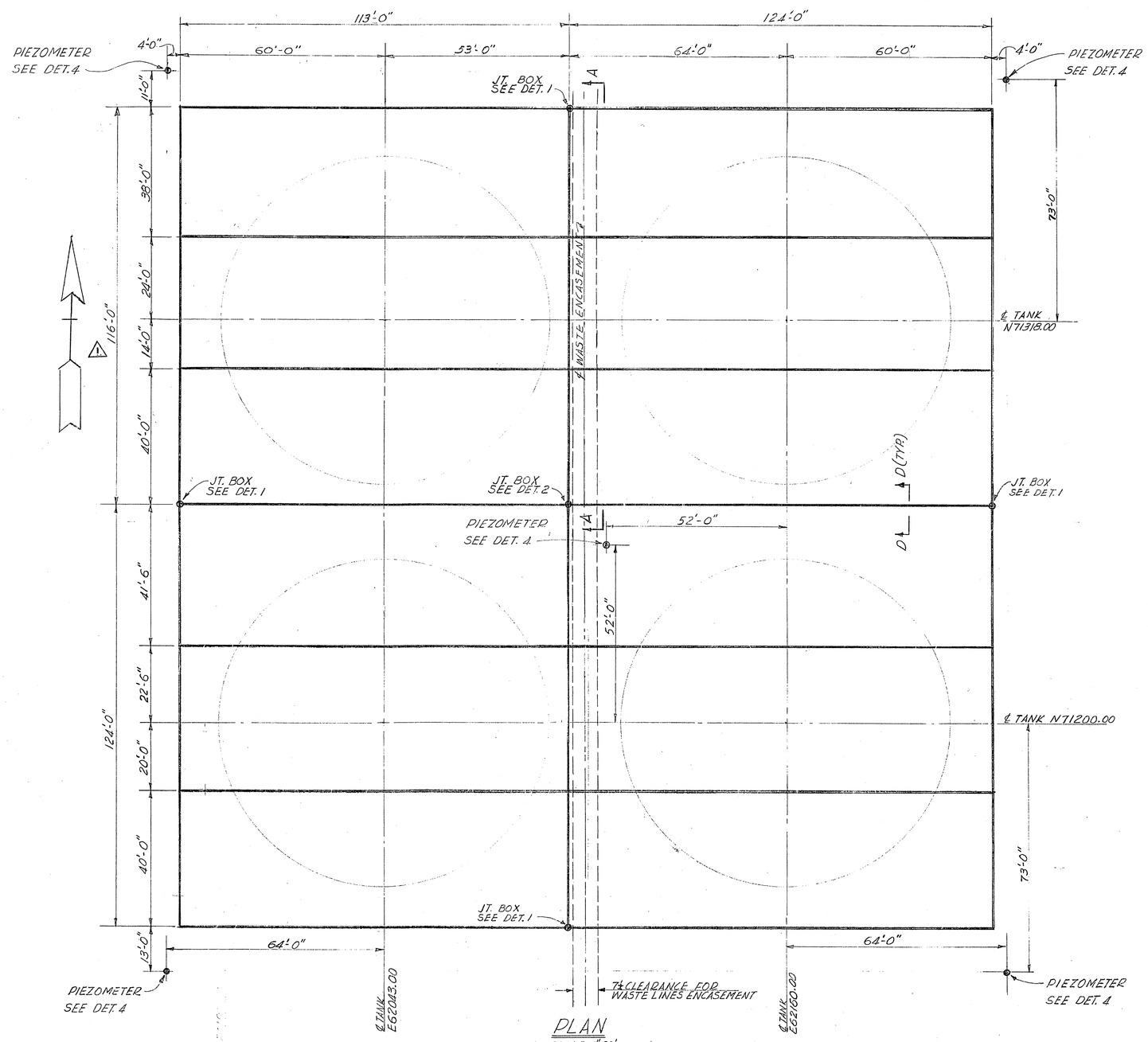

PLAN
SCALE-1"=20'

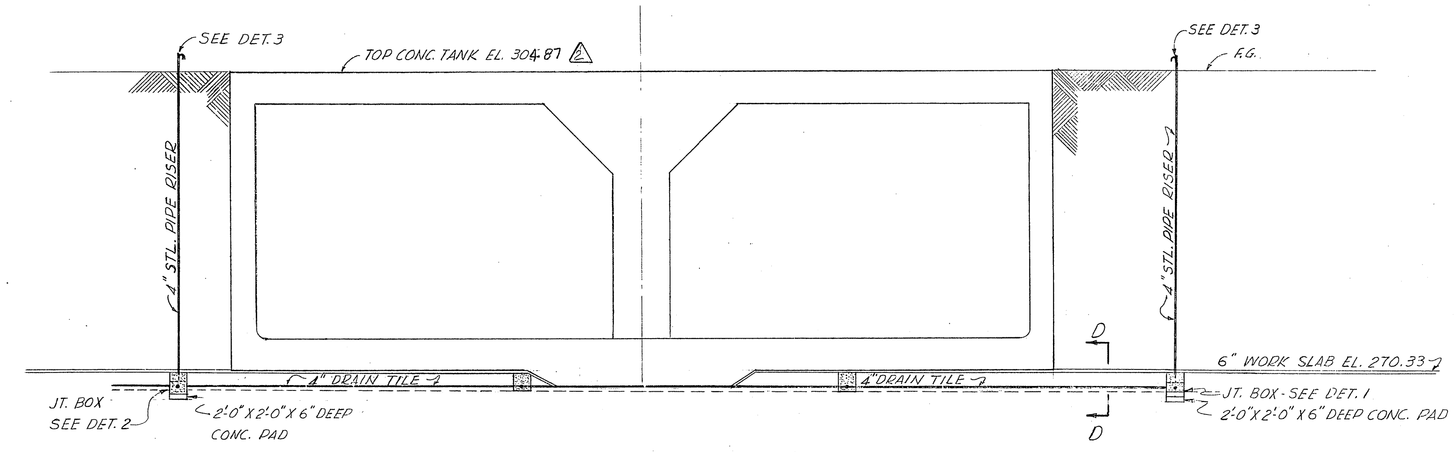

SECTION A-A
SCALE-1"=10'

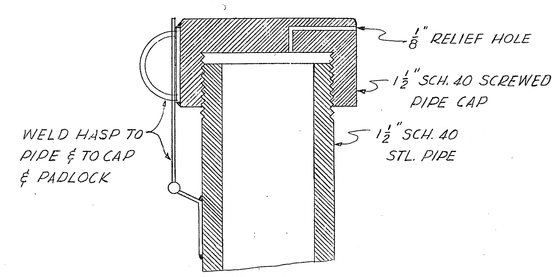

DETAIL 6

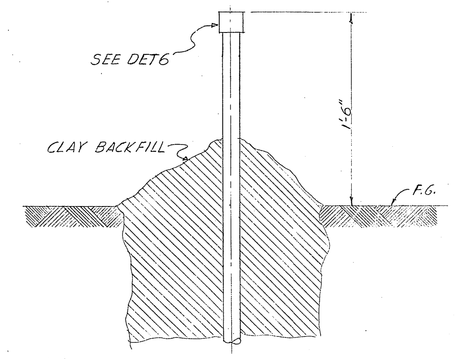

DETAIL 5
SCALE-1½"=1'-0"

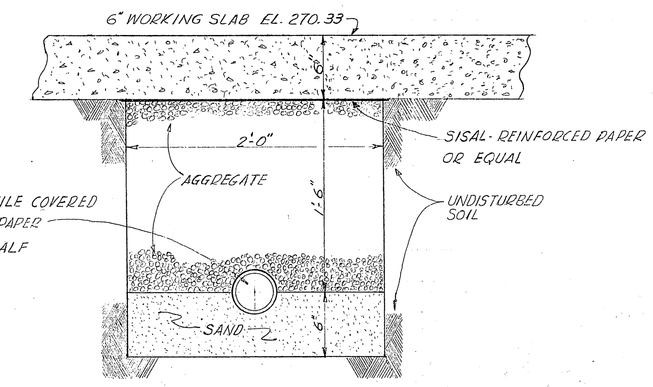

SECTION D-D
SCALE-1½"=1'-0"

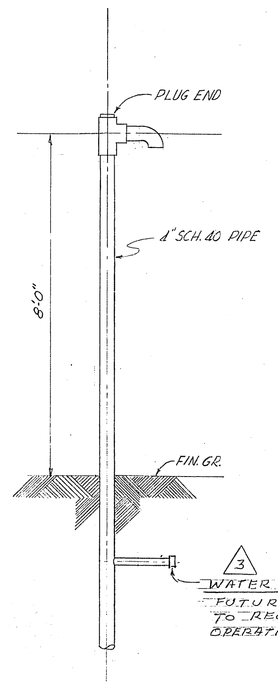

DETAIL 3
SCALE-½"=1'-0"
(5 REQ'D)

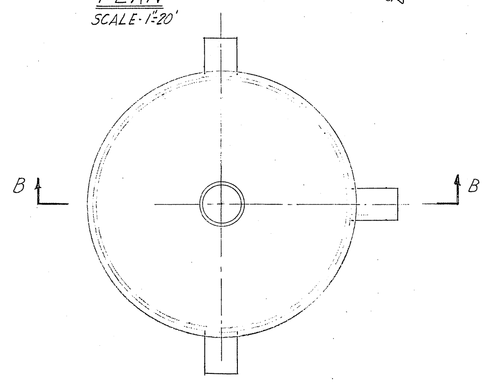

DETAIL 1
SCALE-1½"=1'-0"
(4 REQ'D)

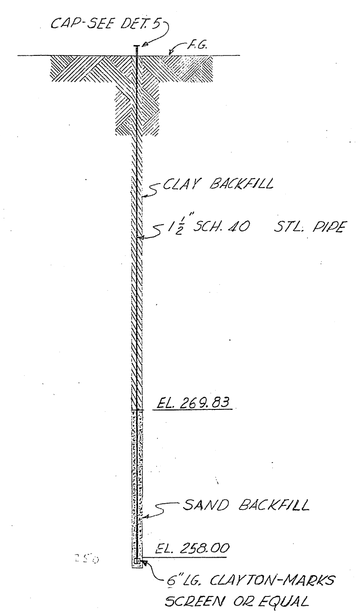

DETAIL 4
SCALE-½"=1'-0"
(5 REQ'D)

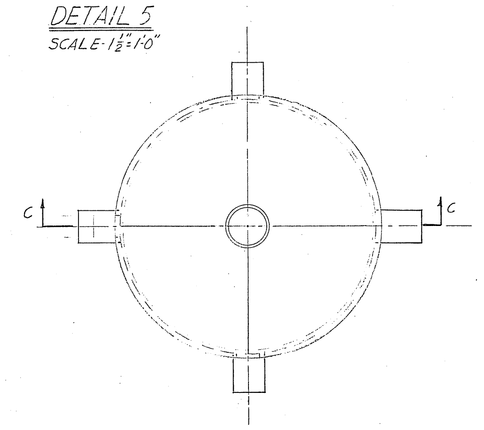

DETAIL 2
SCALE-1½"=1'-0"
(1 REQ'D)

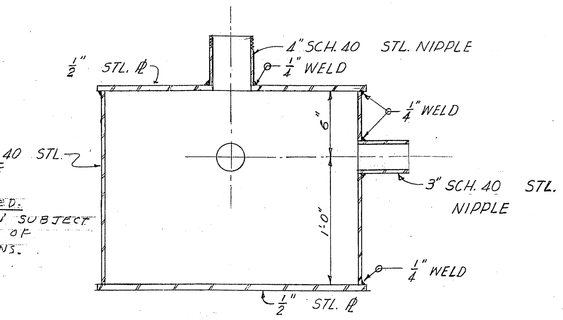

SECTION B-B

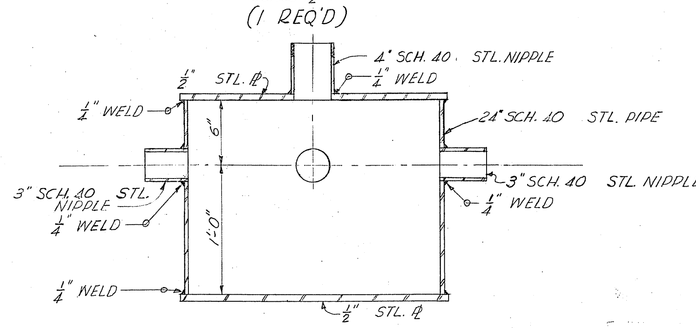

SECTION C-C

MATERIAL REQUIRED-

AGGREGATE	265 CU. YDS. ±
SAND	90 CU. YDS. ±
SISAL PAPER	790 YDS. ±
4" DRAIN TILE	2380 FT. ±
1½" GALV. STL. PIPE	245 FT. ±
4" GALV. STL. PIPE	220 FT. ±
24" GALV. STL. PIPE	7.5 FT. ±
¼" GALV. STL. PLATE	32 SQ. FT. ±
3" STL. NIPPLES	16
4" STL. NIPPLES	5
FITTINGS - AS REQUIRED	

GENERAL NOTES:

1. ALL STL. PIPING & FITTINGS TO BE SCREWED OR WELDED SCHEDULE 40 GALVANIZED UNLESS OTHERWISE NOTED.
2. ALL DRAIN TILE IS TO BE 4" IN DIAMETER & IS TO BE INTERCONNECTED AS SHOWN ON PLAN. AT JUNCTION BOXES DRAIN TILE IS TO BE FITTED ON NOZZLES BY SLIPPING 4" DRAIN TILE PIPE OVER 3" STEEL NOZZLE.
3. SAND & AGGREGATE AS CALLED FOR AROUND DRAIN TILE LATERALS & AROUND PIEZOMETERS ARE TO BE OF THE SAME CONSISTENCY & GRADE AS THAT USED IN CONCRETE. SEE SPEC. 3537.

THIS DOCUMENT CONTAINS INFORMATION RELATING TO ACTIVITIES OF THE ATOMIC ENERGY COMMISSION NOT TO BE REPRODUCED OR RELEASED WITHOUT PRIOR APPROVAL.

W163278

THIS DRAWING HAS BEEN FURNISHED BY E. I. DU PONT DE NEMOURS & CO. THE INFORMATION AND KNOW-HOW THEREON MAY NOT BE USED NOR THE DRAWING REPRODUCED WITHOUT THE WRITTEN PERMISSION OF DU PONT. ALL REPRODUCTIONS IN WHOLE OR IN PART, INCLUDING VENDOR'S SHOP DRAWINGS, SHALL BEAR OR REFER TO THIS STAMP.

ENGINEERING DOC. CONTROL - SRS
0020426

SAVANNAH RIVER PLANT
200 AREA - BLDG. 241-H
FEED WELLS AT 85'ϕ TANKS
PLANS, SECTIONS & DETAILS
CONCRETE & STEEL

P.W.O. 6010-H (F.D.M. 190-H)

PROJ. NO.	REVISIONS	REVISED BY DATE	CHECKED BY DATE	APPROVED BY DATE
8980	1 REVISED "INDICATED" TO "EL."	R.K.T. 5-13-55	T.L.E. 5-13-55	G.C.H. 5-17-55
8980	2 EL. 304.87 WAS EL. 305.04	R.F.B. 6-24-55	T.L.E. 6-24-55	G.C.H. 6-24-55
8980	3 REVISED NOTE FOR WATER INLET TO FEED WELL SYSTEM	J.C. 8-21-56	T.L.E. 8-21-56	G.C.H. 8-22-56

REFERENCE DRAWINGS	
W163048	EXCAVATION
MAD3305-T96	LAYOUT
MAD3314-T96	UNDERGROUND WATER LINES
W163507	STEAM AND WATER SERVICES

PROJ. NO. 8980
SCALE AS NOTED — DATE APR 13 1955
DRAWN BY E.E. WESTBROOK — 4-18-55
CHECKED BY H.R. THURMAN — 5-9-55
APPROVED BY [illegible] — 5-9-55
APPROVED BY [illegible] — 5-16-55

ENGINEERING DEPARTMENT

W163278

401-8