Mark J. Ajluni, P.E.
Nuclear Licensing Director

Southern Nuclear Operating Company, Inc.
40 Inverness Center Parkway
Post Office Box 1295
Birmingham, Alabama 35201

Tel 205.992.7673
Fax 205.992.7885

SOUTHERN COMPANY

April 29, 2011

Docket Nos.: 50-321 50-348 50-424
50-366 50-364 50-425

NL-11-0811

U. S. Nuclear Regulatory Commission
ATTN: Document Control Desk
Washington, D. C. 20555-0001

Edwin I. Hatch Nuclear Plant Unit 1 & 2
Joseph M. Farley Nuclear Plant Unit 1 & 2
Vogtle Electric Generating Plant Unit 1 & 2
Annual Radioactive Effluent Release Reports for 2010

Ladies and Gentlemen:

In accordance with section 5.6.3 of the referenced plants' Technical Specifications, Southern Nuclear Operating Company hereby submits the Annual Radioactive Effluent Release Reports for 2010. The Annual Radioactive Effluent Release Report for the Edwin I. Hatch Nuclear Plant (Hatch), Joseph M. Farley Nuclear Plant (Farley), and the Vogtle Electric Generating Plant (Vogtle) are provided in Enclosures 1, 2, and 3, respectively.

Technical Specification 5.5.1.c. for each plant requires that the Offsite Dose Calculation Manual (ODCM) be provided as a part of, or concurrent with, the Radioactive Effluent Release Report for the period of the report in which any change in the ODCM was made. During the reporting period for the Annual Radioactive Effluent Release Report for 2010, the Farley and Vogtle ODCMs were revised. Accordingly, copies of Version 24 of the Farley ODCM, dated January 2010, and Version 27 of the Vogtle ODCM, dated October 2010 are provided in Enclosures 4 and 5, respectively. Revision bars are provided in the margin to show the changes for Version 24 of the Farley ODCM and Version 27 of the Vogtle ODCM. A description of the changes to each ODCM is provided in Section 8.0 of the Annual Radioactive Effluent Release Report for the corresponding plant. Changes to the Process Control Program (PCP) and to previous Annual Radioactive Effluent Release Reports, as applicable, are described in section 9.2 of the corresponding Radioactive Effluent Release Report for each site.

This letter contains no NRC commitments. If you have any questions, please advise.

Respectfully submitted,

M. J. Ajluni
Nuclear Licensing Director

MJA/LWW/lac

Enclosures: 1. Hatch Annual Radioactive Effluent Release Report for 2010
2. Farley Annual Radioactive Effluent Release Report for 2010
3. Vogtle Annual Radioactive Effluent Release Report for 2010
4. Farley Offsite Dose Calculation Manual – Version 24
5. Vogtle Offsite Dose Calculation Manual – Version 27

cc: Southern Nuclear Operating Company
Mr. J. T. Gasser, Executive Vice President
Mr. L. M. Stinson, Vice President - Farley
Mr. D. R. Madison, Vice President – Hatch
Mr. T. E. Tynan, Vice President – Vogtle
Ms. P. M. Marino, Vice President – Engineering
RType:CFA04.054; CHA02.004; CVC7000

U. S. Nuclear Regulatory Commission
Mr. V.M. McCree, Regional Administrator
Mr. R. E. Martin, NRR Project Manager – Farley, Hatch and Vogtle
Mr. P. G. Boyle, NRR Project Manager
Mr. E. L. Crowe, Senior Resident Inspector – Farley
Mr. E. D. Morris, Senior Resident Inspector – Hatch
Mr. M. Cain, Senior Resident Inspector – Vogtle

State of Alabama
Mr. J. L. McNees, Department of Public Health, Division of Radiation Control

State of Georgia
Mr. Jim Hardeman, Department of Natural Resources

Georgia Power Company
Mr. Rickey E. Smith

American Nuclear Insurers
Mr. R. A. Oliveira

Edwin I. Hatch Nuclear Plant
Joseph M. Farley Nuclear Plant
Vogtle Electric Generating Plant
Annual Radioactive Effluent Release Reports for 2010

Enclosure 1

Hatch Annual Radioactive Effluent Release Report for 2010

SOUTHERN COMPANY

E. I. HATCH NUCLEAR PLANT

UNITS NO. 1 & 2

ANNUAL REPORT

PLANT RADIOACTIVE EFFLUENT RELEASES

JANUARY 1, 2010 THROUGH DECEMBER 31, 2010

SECTION	TITLE	PAGE
1.0	Liquid Effluents	1
1.1	Regulatory Requirements	1
1.1.1	Concentration Limits	1
1.1.2	Dose Limits	1
1.2	Effluent Concentration Limit	1
1.3	Measurements and Approximations of Total Radioactivity for Liquid Radwaste	2
1.3.1	Total Radioactivity Determination for Liquid Radwaste	2
1.4	Measurements and Approximations of Total Radioactivity for Groundwater Outfall–Y22N008A	4
1.4.1	Total Radioactivity Determination for Groundwater Outfalls	4
1.5	Total Error Estimation	5
1.6	Liquid Effluent Release Data	6
1.7	Radiological Impact Due to Liquid Releases	7
1.8	Liquid Effluents - Batch Releases	7
1.9	Liquid Effluents - Continuous Releases	7

SECTION	TITLE	PAGE
1.10	Liquid Effluents - Abnormal Releases	7
2.0	Gaseous Effluents	27
2.1	Regulatory Requirements	27
2.1.1	Dose Rate Limits	27
2.1.2	Air Doses Due to Noble Gases in Gaseous Releases	27
2.1.3	Doses to a Member of the Public	27
2.2	Measurements and Approximations of Total Radioactivity	28
2.2.1	Sample Collection and Analysis	28
2.2.2	Total Quantities of Radioactivity, Dose Rates and Cumulative Doses	29
2.2.2.1	Fission and Activation Gases	29
2.2.2.2	Radioiodine, Tritium and Particulate Releases	29
2.2.2.3	Gross Alpha Release	30
2.2.3	Total Error Estimation	30
2.3	Gaseous Effluent Release Data	32
2.4	Radiological Impact Due to Gaseous Releases	33
2.5	Gaseous Effluents - Batch Releases	33
2.6	Gaseous Effluents - Abnormal Releases	33
3.0	Solid Waste	63
3.1	Regulatory Requirements	63
3.1.1	Solid Radioactive Waste System	63
3.1.2	Reporting Requirements	63

SECTION	TITLE	PAGE
3.2	Solid Waste Data	64
4.0	Doses to Members of the Public Inside The Site Boundary	68
4.1	Regulatory Requirements	68
4.2	Demonstration of Compliance	68
5.0	Total Dose from Uranium Fuel Cycle (40 CFR 190)	73
5.1	Regulatory Requirements	73
5.2	Demonstration of Compliance	73
6.0	Meteorological Data	73
7.0	Program Deviations	73
7.1	Inoperable Liquid or Gaseous Effluent Monitoring Instrumentation	73
7.1.1	Regulatory Requirements	73
7.1.2	Description of Deviations	74
7.2	Tanks Exceeding Curie Content Limits	74
7.2.1	Regulatory Requirements	74
7.2.2	Description of Deviations	74
7.3	Effluent Sample Analysis Exceeding Minimum Detectable Concentration (MDC)	74
7.3.1	Regulatory Requirement	74
7.3.2	Description of Deviation	74

SECTION	TITLE	PAGE
8.0	Changes to the Plant Hatch Offsite Dose Calculation Manual (ODCM)	74
8.1	Regulatory Requirements	74
8.2	Description of Changes	75
9.0	Major Changes to the Liquid, Gaseous or Solid Radwaste Treatment Systems	75
9.1	Regulatory Requirements	75
9.2	Description of Major Changes	75

SOUTHERN COMPANY

E. I. HATCH NUCLEAR PLANT

UNITS NO. 1 & 2

ANNUAL REPORT

PLANT RADIOACTIVE EFFLUENT RELEASES

TABLE	LIST OF TABLES	PAGE
1-1A	Liquid Effluents - Summation of All Releases Unit 1 (Quarters 1, 2, 3 and 4)	8
1-1B	Liquid Effluents - Summation of All Releases Unit 2 (Quarters 1, 2, 3 and 4)	9
1-1C	Liquid Effluents - Summation of All Releases Site (Quarters 1, 2, 3 and 4)	10
1-2A	Liquid Effluents - Unit 1 (Quarters 1, 2, 3 and 4)	11
1-2B	Liquid Effluents - Unit 2 (Quarters 1, 2, 3 and 4)	13
1-2C	Liquid Effluents - Site (Quarters 1, 2, 3 and 4)	16
1-3A	Doses to a Member of The Public Due to Liquid Releases Unit 1 (Quarters 1, 2, 3 and 4)	19
1-3B	Doses to a Member of The Public Due to Liquid Releases Unit 2 (Quarters 1, 2, 3 and 4)	20
1-4	Minimum Detectable Concentration - Liquid Sample Analysis	21
1-5A	Liquid Effluents - Batch Release Summary Unit 1	22
1-5B	Liquid Effluents - Batch Release Summary Unit 2	23

TABLE	LIST OF TABLES	PAGE

1-6A	Liquid Effluents - Abnormal Release Summary Unit 1	24
1-6B	Liquid Effluents - Abnormal Release Summary Unit 2	25
1-6C	Liquid Effluents- Abnormal Release Summary – Site	26
2-1A	Gaseous Effluents - Summation of All Releases - Unit 1 (Quarters 1, 2, 3 and 4)	34
2-1B	Gaseous Effluents - Summation of All Releases -Unit 2 (Quarters 1, 2, 3 and 4)	35
2-1C	Gaseous Effluents - Summation of All Releases - Site (Quarters 1, 2, 3 and 4)	36
2-2A	Gaseous Effluents - Elevated Releases Unit 1 (Quarters 1, 2, 3 and 4)	37
2-2B	Gaseous Effluents - Elevated Releases Unit 2 (Quarters 1, 2, 3 and 4)	40
2-2C	Gaseous Effluents - Elevated Releases Site (Quarters 1, 2, 3 and 4)	44
2-3A	Gaseous Effluents - Ground Level Releases Unit 1 (Quarters 1, 2, 3 and 4)	47
2-3B	Gaseous Effluents - Ground Level Releases Unit 2 (Quarters 1, 2, 3 and 4)	49
2-3C	Gaseous Effluents - Ground Level Releases Site (Quarters 1, 2, 3 and 4)	51
2-4A	Air Doses Due to Noble Gases in Gaseous Releases - Unit 1 (Quarters 1, 2, 3 and 4)	53

TABLE	LIST OF TABLES	PAGE

2-4B	Air Doses Due to Noble Gases in Gaseous Releases- Unit 2 (Quarters 1, 2, 3 and 4)	54
2-5A	Doses to a Member of the Public Due to Radioiodine, Tritium, and Particulates in Gaseous Releases - Unit 1 (Quarters 1, 2, 3 and 4)	55
2-5B	Doses to a Member of the Public Due to Radioiodine, Tritium, and Particulates in Gaseous Releases - Unit 2 (Quarters 1, 2, 3 and 4)	56
2-6	Minimum Detectable Concentration - Gaseous Sample Analyses	57
2-7A	Gaseous Effluents - Batch Release Summary Unit 1	58
2-7B	Gaseous Effluents - Batch Release Summary Unit 2	59
2-8A	Gaseous Effluents - Abnormal Release Summary Unit 1	60
2-8B	Gaseous Effluents - Abnormal Release Summary Unit 2	61
2-8C	Gaseous Effluents - Abnormal Release Summary Unit Site	62
3-1	Solid Waste and Irradiated Fuel Shipments	65
4-1	Doses to a Member of the Public Due to Activities Inside The Site Boundary	69

1.0 Liquid Effluents

1.1 Regulatory Requirements

1.1.1 Concentration Limits

The concentration of radioactive material released in liquid effluents to UNRESTRICTED AREAS shall be limited to ten times the concentrations specified in 10 CFR Part 20, Appendix B, Table 2, Column 2, for radionuclides other than dissolved or entrained noble gases. For dissolved or entrained noble gases, the concentration shall be limited to 1E-04 microcuries/ml total activity.

1.1.2 Dose Limits

The dose or dose commitment, to a MEMBER OF THE PUBLIC from radioactive materials in liquid effluents released from each unit to UNRESTRICTED AREAS, shall be limited:

a. During any calendar quarter, to less than or equal to 1.5 mrems to the whole body and to less than or equal to 5 mrems to any organ, and

b. During any calendar year, to less than or equal to 3 mrems to the whole body and to less than or equal to 10 mrems to any organ.

1.2 Effluent Concentration Limit

ECL values used in determining allowable liquid radwaste release rates and concentrations, for principal gamma emitters, I-131, tritium, Sr-89, Sr-90 and Fe-55, are taken from 10 CFR Part 20, Appendix B, Table 2, Column 2.
A tolerance factor of up to 10 is utilized to allow flexibility in establishing practical monitor set points which can accommodate effluent releases at concentrations higher than the ECL values stated in 10 CFR 20, Appendix B, Table 2, Column 2.

For dissolved or entrained noble gases in liquid radwaste, the ECL is 1E-04 uCi/ml total activity.

For gross alpha in liquid radwaste, the ECL is 2E-09 uCi/ml.

Furthermore, for all the above radionuclides, or categories of radioactivity, the overall ECL fraction is determined in accordance with 10 CFR Part 20, Appendix B.

The method utilizing the ECL fraction to determine liquid radwaste release rates and effluent radiation monitor set points is described in Subsection 1.3 of this report.

The method utilizing the ECL fraction to determine the dose released from groundwater outfalls is described in Subsection 1.4 of this report.

1.3 Measurements and Approximations of Total Radioactivity for Liquid Radwaste

Prior to the release of any tank containing liquid radwaste, following the required recirculations, samples are collected and analyzed in accordance with the Edwin I. Hatch Nuclear Plant Offsite Dose Calculation Manual (ODCM) Table 2-3. A sample from each tank planned for release is analyzed for principal gamma emitters, I-131, and dissolved and entrained noble gases, by gamma spectroscopy. Monthly and quarterly composites are prepared for analysis by extracting aliquots from each sample taken from the tanks released. Liquid radwaste sample analyses are performed as described in Section 1.3.1.

1.3.1 Total Radioactivity Determination for Liquid Radwaste

MEASUREMENT	FREQUENCY	METHOD
1. Gamma Isotopic	Each Batch	Gamma Spectroscopy with computerized data reduction.
2. Dissolved or entrained noble gas	Each Batch	Gamma Spectroscopy with computerized data reduction.
3. Tritium	Monthly Composite	Distillation and liquid scintillation counting
4. Gross Alpha	Monthly Composite	Gas flow proportional counting
5. Sr-89 & Sr-90	Quarterly Composite	Chemical separation and gas flow proportional or scintillation counting
6. Fe-55	Quarterly Composite	Chemical separation and liquid scintillation counting

Gamma isotopic measurements are performed in-house using germanium detectors with a resolution of 2.0 keV or lower. The detectors are shielded by four inches of lead. A liquid radwaste sample is typically counted for 2000 seconds and a peak search of the resulting gamma ray spectrum is performed. Energy and net count data for all significant peaks are determined and a quantitative reduction or MDC calculation is performed to ensure that the MDC's are met for the nuclides specified in the ODCM Chapter 10 (i.e., Mn-54, Fe-59, Co-58, Co-60, Zn-65, Mo-99, Cs-134, Cs-137, Ce-141 and Ce-144). The quantitative calculations, corrections for counting time, decay time, sample volume, sample geometry, detector efficiency, baseline counts, branching ratio and MDC calculations, are made based on the counts at the location in the spectrum where the peak for that radionuclide would be located, if present. Typically achieved liquid effluent sample analyses minimum detectable concentrations are reported in Table 1-4.

Tritium, Gross Alpha, Sr-89, Sr-90 and Fe-55 are, in some cases, analyzed offsite.

The radionuclide concentrations determined by gamma spectroscopic analysis of samples taken from tanks planned for release, in addition to the most current sample analysis results available for tritium, gross alpha, Sr-89, Sr-90 and Fe-55, are used along with the corresponding ECL values to determine the ECL fraction for these tanks. This ECL fraction is then used, with the appropriate safety factors, tolerance factors, and the expected dilution stream flow to calculate maximum permissible release rate and a liquid effluent monitor setpoint. The monitor setpoint is calculated to assure that the limits of the ODCM are not exceeded.

A monitor reading in excess of the calculated setpoint will result in an automatic termination of the liquid radwaste discharge. Liquid effluent discharge is also automatically terminated if the dilution stream flow rate falls below the minimum assured dilution flow rate used in the setpoint calculations and established as a setpoint on the dilution stream flow monitor.

Radionuclide concentrations, safety factors, dilution stream flow rate, and the liquid effluent radiation monitor calibration factor, are entered into the computer and a pre-release printout is generated. If the release is not permissible, appropriate warnings will be displayed on the computer screen. If the release is permissible, it is approved by the qualified technician on duty. The pertinent information is transferred manually from the prerelease printout to a one-page release permit, which is forwarded to Radwaste Operations. When the release is completed, the release permit is returned from Radwaste Operations to Chemistry with the actual release data provided. These data are input into the computer and a post-release printout is generated. The post release printout contains the actual release rates, the actual release concentrations and quantities, the actual dilution flow, and the calculated doses to a Member of the Public.

1.4 *Measurements and Approximations of Total Radioactivity for Groundwater Outfall –Y22N008A*

Samples are collected and analyzed in accordance with the Edwin I. Hatch Nuclear Plant Offsite Dose Calculation Manual (ODCM) Table 2-3. Weekly, monthly and quarterly composites are prepared for analysis by extracting aliquots from the outfall's automatic sampler, which collects a composite sample over a seven-day period. Sample analyses are performed as described in Section 1.4.1.

1.4.1 *Total Radioactivity Determination for Groundwater Outfalls*

MEASUREMENT	FREQUENCY	METHOD
1. Gamma Isotopic * * Additional analysis may be required based on abnormal results	Weekly Composite	Gamma Spectroscopy with computerized data reduction.
2. Tritium * * Additional analysis may be required based on abnormal results	Weekly Composite	Distillation and liquid scintillation counting
3. Sr-89 & Sr-90	Quarterly Composite	Chemical separation and gas flow proportional or scintillation counting

Gamma isotopic measurements are performed in-house using germanium detectors with a resolution of 2.0 keV or lower. The detectors are shielded by four inches of lead. A weekly composite sample is typically counted to Environmental MDC's and a peak search of the resulting gamma ray spectrum is performed. Energy and net count data for all significant peaks are determined and a quantitative reduction or MDC calculation is performed to ensure that the MDC's are met for the nuclides specified in the ODCM Chapter 10 (i.e., Mn-54, Fe-59, Co-58, Co-60, Zn-65, Mo-99, Cs-134, Cs-137, Ce-141 and Ce-144). The quantitative calculations, corrections for counting time, decay time, sample volume, sample geometry, detector efficiency, baseline counts, branching ratio and MDC calculations, are made based on the counts at the location in the spectrum where the peak for that radionuclide would be located, if present.

Typically achieved liquid effluent sample analyses minimum detectable concentrations are reported in Table 1-4.

Tritium, Gross Beta, Sr-89 and Sr-90 are, in some cases, analyzed offsite.

The radionuclide concentrations determined by gamma spectroscopic analysis of the weekly composite sample, in addition to the most current sample analysis results available for tritium, gross beta, Sr-89 and Sr-90, are used along with the corresponding ECL values to determine the ECL fraction for these composite samples. This ECL fraction is then used, with the appropriate safety factors, tolerance factors, and the expected dilution stream flow to calculate projected dose released.

Radionuclide concentrations, safety factors and dilution stream flow rate are entered into the computer and a pre-release printout is generated for each release period. When the release period is complete, the release permit is updated with the actual release data collected during the release period. These data are input into the computer and a post-release printout is generated. The post release printout contains the actual release rates, the actual release concentrations and quantities, the actual dilution flow, and the calculated doses to a Member of the Public. Cumulative dose results are tabulated along with the percent of the ODCM limit for each release period, for the current quarter and year.

1.5 Total Error Estimation

The maximum error associated with volume and flow measurements, based upon plant calibration practice, is estimated to be + or - 10%. The average error associated with counting is estimated to be less than + or - 15%. Therefore, the total error estimation is + or - 18%.

1.6 Liquid Effluent Release Data

Regulatory Guide 1.21, Tables 2A and 2B are found in this report as Table 1-1A, for Unit 1, Table 1-1B, for Unit 2 and Table 1-1C, for the site; and Table 1-2A, for Unit 1, 1-2B, for Unit 2, and Table 1-2C, for the site. Typical liquid minimum detectable concentrations (MDC's) used for analyses are found in Table 1-4.

The evaluation for the release of radioactive RHR Service Water for 2010 can be found in Appendix A of this report.

The values for the four categories of Tables 1-1A, and 1-1B, and 1-1C, are calculated and the Tables completed as follows:

1. Fission and activation products - The total release values (not including tritium, gases, and alpha) are comprised of the sum of the measured individual radionuclide activities. This sum is for each batch released to the river for the respective quarter.

2. Tritium - The measured tritium concentrations in the monthly composite samples are used to calculate the total release and average diluted concentration during each period.

3. Dissolved and entrained gases - Concentrations of dissolved and entrained gases in liquid effluents are measured by germanium spectroscopy using a one liter sample from each liquid radwaste batch. The measured concentrations are used to calculate the total release and the average diluted concentration during the period. Radioisotopes of iodine in any form are also determined during the isotopic analysis for each batch; therefore, a separate analysis for possible gaseous forms is not performed because it would not provide additional information.

4. Gross alpha radioactivity - The measured gross alpha concentrations in the monthly composite samples are used to calculate the total release of alpha radioactivity.

1.7 Radiological Impact Due to Liquid Releases

Doses to a Member of the Public due to radioactivity in liquid effluents were calculated in accordance with the Offsite Dose Calculation Manual. Results are presented in Table 1-3A for Unit 1, and 1-3B for Unit 2, for all four quarters.

1.8 Liquid Effluents - Batch Releases

Batch Release information for Units 1 and 2 is summarized in the following tables:

Unit 1 Liquid Batch Releases:	Table 1-5A
Unit 2 Liquid Batch Releases:	Table 1-5B

1.9 Liquid Effluents - Continuous Releases

Continuous Release information is summarized in the following tables:

Unit 1 Liquid Continuous Releases:	Table 1-2A*
(No continuous release points for U1).	
Unit 2 Liquid Continuous Releases:	Table 1-2B
Hatch Site Continuous Releases:	Table 1-2C

1.10 Liquid Effluents - Abnormal Releases

There were no abnormal liquid releases for this reporting period.

Table 1-1A

Hatch Nuclear Plant

RADIOACTIVE EFFLUENT RELEASE REPORT - 2010

Liquid Effluents - Summation Of All Releases

Unit: 1

Starting: 1-Jan- 2010 Ending: 31-Dec-2010

Type of Effluent	Units	1ST Quarter	2ND Quarter	3RD Quarter	4TH Quarter
A. Fission And Activation Products					
1. Total Release (not including tritium, gases, alpha)	Curies	0.00E+00	1.05E-03	3.30E-04	0.00E+00
2. Average diluted concentration during period	uCi/mL	0.00E+00	3.92E-09	7.71E-10	0.00E+00
3. Percent of Applicable Limit	%	*	*	*	*
B. Tritium					
1. Total Release	Curies	0.00E+00	5.03E+01	1.08E+01	0.00E+00
2. Average diluted Concentration during period	uCi/mL	0.00E+00	3.83E-05	2.53E-05	0.00E+00
3. Percent of Applicable Limit	%	*	*	*	*
C. Dissolved and Entrained Gases					
1. Total Release	Curies	0.00E+00	3.77E-07	7.80E-07	0.00E+00
2. Average diluted Concentration during period	uCi/mL	0.00E+00	1.41E-12	1.82E-12	0.00E+00
3. Percent of Applicable Limit	%	*	*	*	*
D: Gross Alpha Radioactivity					
1. Total Release	Curies	0.00E+00	5.17E-07	1.05E-06	0.00E+00
E: Waste Vol Release (Pre-Dilution)	Liters	0.00E+00	1.30E+06	1.99E+06	0.00E+00
F. Volume of Dilution Water Used	Liters	0.00E+00	2.68E+08	4.29E+08	0.00E+00

* Applicable limits are expressed in terms of dose. See Tables 1-3A and 1-3B of this report.

Table 1-1B

Hatch Nuclear Plant

RADIOACTIVE EFFLUENT RELEASE REPORT - 2010

Liquid Effluents - Summation Of All Releases

Unit: 2

Starting: 1-Jan- 2010 Ending: 31-Dec-2010

Type of Effluent	Units	1ST Quarter	2ND Quarter	3RD Quarter	4TH Quarter
A. Fission And Activation Products					
1. Total Release (not including tritium, gases, alpha)	Curies	3.07E-03	1.47E-04	1.00E-03	3.97E-06
2. Average diluted concentration during period	uCi/mL	7.65E-12	2.80E-11	1.72E-10	1.14E-12
3. Percent of Applicable Limit	%	*	*	*	*
B. Tritium					
1. Total Release	Curies	4.15E-02	1.04E+00	4.61E+00	2.10E-02
2. Average diluted Concentration during period	uCi/mL	1.03E-08	1.97E-07	7.90E-07	6.03E-09
3. Percent of Applicable Limit	%	*	*	*	*
C. Dissolved and Entrained Gases					
1. Total Release	Curies	0.00E+00	3.51E-05	3.30E-04	0.00E+00
2. Average diluted Concentration during period	uCi/mL	0.00E+00	6.67E-12	5.67E-11	0.00E+00
3. Percent of Applicable Limit	%	*	*	*	*
D: Gross Alpha Radioactivity					
1. Total Release	Curies	0.00E+00	1.09E-07	3.69E-07	0.00E+00
E: Waste Vol Release (Pre-Dilution)	Liters	3.72E+06	3.00E+06	4.65E+06	1.97E+06
F. Volume of Dilution Water Used	Liters	4.01E+09	5.27E+09	5.81E+09	3.48E+09

* Applicable limits are expressed in terms of dose. See Tables 1-3A and 1-3B of this report.

Table 1-1C

Hatch Nuclear Plant

RADIOACTIVE EFFLUENT RELEASE REPORT - 2010

Liquid Effluents - Summation Of All Releases

Unit: Site

Starting: 1-Jan- 2010 Ending: 31-Dec-2010

Type of Effluent	Units	1ST Quarter	2ND Quarter	3RD Quarter	4TH Quarter
A. Fission And Activation Products					
1. Total Release (not including tritium, gases, alpha)	Curies	3.07E-05	1.20E-03	1.23E-03	3.97E-06
2. Average diluted concentration during period	uCi/mL	7.65E-12	2.16E-10	2.13E-10	1.14E-12
3. Percent of Applicable Limit	%	*	*	*	*
B. Tritium					
1. Total Release	Curies	4.15E-02	1.13E+01	1.54E+01	2.10E-02
2. Average diluted Concentration during period	uCi/mL	1.03E-08	2.04E-06	2.47E-06	6.03E-09
3. Percent of Applicable Limit	%	*	*	*	*
C. Dissolved and Entrained Gases					
1. Total Release	Curies	0.00E+00	3.55E-05	3.31E-04	0.00E+00
2. Average diluted Concentration during period	uCi/mL	0.00E+00	6.41E-12	5.29E-11	0.00E+00
3. Percent of Applicable Limit	%	*	*	*	*
D: Gross Alpha Radioactivity					
1. Total Release	Curies	0.00E+00	6.27E-07	1.42E-06	0.00E+00
E: Waste Vol Release (Pre-Dilution)	Liters	3.72E+06	4.31E+06	6.64E+06	1.97E+06
F. Volume of Dilution Water Used	Liters	4.01E+09	5.54E+09	6.26E+09	3.48E+09

* Applicable limits are expressed in terms of dose. See Tables 1-3A and 1-3B of this report.

Hatch Nuclear Plant

RADIOACTIVE EFFLUENT RELEASE REPORT - 2010

Liquid Effluents

Unit: 1

Starting: 1-Jan-2010 Ending: 31-Dec-2010

		Continuous Mode			
Nuclides Released	**Unit**	**1ST Quarter**	**2ND Quarter**	**3RD Quarter**	**4TH Quarter**
Fission & Activation Products					
No Nuclides Found	Curies	0.00E+00	0.00E+00	0.00E+00	0.00E+00
Tritium					
No Nuclides Found	Curies	0.00E+00	0.00E+00	0.00E+00	0.00E+00
Dissolved And Entrained Gases					
No Nuclides Found	Curies	0.00E+00	0.00E+00	0.00E+00	0.00E+00
Gross Alpha Radioactivity					
No Nuclides Found	Curies	0.00E+00	0.00E+00	0.00E+00	0.00E+00

Zeroes in this table indicates that no radioactivity was present at detectable levels.
See Table 1-4 for typical minimum detectable concentrations.

Table 1-2A

Hatch Nuclear Plant

RADIOACTIVE EFFLUENT RELEASE REPORT - 2010

Liquid Effluents

Unit: 1

Starting: 1-Jan-2010 Ending: 31-Dec-2010

		Batch Mode			
Nuclides Released	**Unit**	**1ST Quarter**	**2ND Quarter**	**3RD Quarter**	**4TH Quarter**
Fission & Activation Products					
Co-58	Curies	0.00E+00	5.92E-06	6.96E-06	0.00E+00
Co-60	Curies	0.00E+00	1.75E-04	6.67E-05	0.00E+00
Fe-55	Curies	0.00E+00	9.78E-05	3.71E-05	0.00E+00
I-131	Curies	0.00E+00	3.47E-07	0.00E+00	0.00E+00
Mn-54	Curies	0.00E+00	2.64E-05	1.45E-05	0.00E+00
Mn-56	Curies	0.00E+00	3.29E-06	0.00E+00	0.00E+00
Na-24	Curies	0.00E+00	2.04E-04	5.10E-05	0.00E+00
Sr-89	Curies	0.00E+00	2.70E-05	0.00E+00	0.00E+00
Au-199	Curies	0.00E+00	1.33E-06	0.00E+00	0.00E+00
Cs-137	Curies	0.00E+00	5.06E-04	1.54E-04	0.00E+00
Zn-69M	Curies	0.00E+00	1.20E-06	0.00E+00	0.00E+00
Total For Period	**Curies**	**0.00E+00**	**1.05E-03**	**3.30E-04**	**0.00E+00**
Tritium					
H-3	Curies	0.00E+00	1.03E+01	1.08E+01	0.00E+00
Dissolved And Entrained Gases					
Xe-135	Curies	0.00E+00	3.77E-07	7.80E-07	0.00E+00
Total For Period	**Curies**	**0.00E+00**	**3.77E-07**	**7.80E-07**	**0.00E+00**
Gross Alpha Radioactivity					
G-Alpha	Curies	0.00E+00	5.17E-07	1.05E-06	0.00E+00

Zeroes in this table indicates that no radioactivity was present at detectable levels.
See Table 1-4 for typical minimum detectable concentrations.

Table 1-2B

Hatch Nuclear Plant

RADIOACTIVE EFFLUENT RELEASE REPORT - 2010

Liquid Effluents

Unit: 2

Starting: 1-Jan-2010 Ending: 31-Dec-2010

		Continuous Mode			
Nuclides Released	**Unit**	**1ST Quarter**	**2ND Quarter**	**3RD Quarter**	**4TH Quarter**
Fission & Activation Products					
Sr-89	Curies	3.07E-05	5.12E-05	3.54E-05	3.97E-06
Total For Period	**Curies**	**3.07E-05**	**5.12E-05**	**3.54E-05**	**3.97E-06**
Tritium					
H-3	Curies	4.15E-02	4.68E-02	6.33E-02	2.10E-02
Dissolved And Entrained Gases					
No Nuclides Found	Curies	0.00E+00	0.00E+00	0.00E+00	0.00E+00
Gross Alpha Radioactivity					
No Nuclides Found	Curies	0.00E+00	0.00E+00	0.00E+00	0.00E+00

Zeroes in this table indicates that no radioactivity was present at detectable levels.
See Table 1-4 for typical minimum detectable concentrations.

Table 1-2B

Hatch Nuclear Plant

RADIOACTIVE EFFLUENT RELEASE REPORT - 2010

Liquid Effluents

Unit: 2

Starting: 1-Jan-2010 Ending: 31-Dec-2010

		Batch Mode			
Nuclides Released	**Unit**	**1ST Quarter**	**2ND Quarter**	**3RD Quarter**	**4TH Quarter**
Fission & Activation Products					
Y-92	Curies	0.00E+00	0.00E+00	3.07E-05	0.00E+00
As-76	Curies	0.00E+00	1.17E-06	2.41E-05	0.00E+00
Co-58	Curies	0.00E+00	0.00E+00	2.23E-05	0.00E+00
Co-60	Curies	0.00E+00	9.73E-06	9.17E-05	0.00E+00
Fe-55	Curies	0.00E+00	6.24E-05	3.61E-05	0.00E+00
I-131	Curies	0.00E+00	4.64E-07	2.91E-05	0.00E+00
I-133	Curies	0.00E+00	6.77E-07	4.13E-05	0.00E+00
Mn-54	Curies	0.00E+00	3.07E-06	6.44E-05	0.00E+00
Mn-56	Curies	0.00E+00	0.00E+00	1.90E-05	0.00E+00
Na-24	Curies	0.00E+00	1.08E-05	1.66E-04	0.00E+00
Nb-95	Curies	0.00E+00	3.01E-07	0.00E+00	0.00E+00
Nb-97	Curies	0.00E+00	0.00E+00	1.86E-06	0.00E+00
Sr-89	Curies	0.00E+00	2.94E-06	2.16E-04	0.00E+00
Sr-91	Curies	0.00E+00	0.00E+00	5.38E-05	0.00E+00
Sr-92	Curies	0.00E+00	0.00E+00	5.36E-06	0.00E+00
Y-91M	Curies	0.00E+00	0.00E+00	7.35E-06	0.00E+00
Zn-65	Curies	0.00E+00	2.53E-06	1.94E-05	0.00E+00
Cs-136	Curies	0.00E+00	0.00E+00	3.70E-06	0.00E+00
Cs-137	Curies	0.00E+00	2.06E-06	2.27E-05	0.00E+00
La-140	Curies	0.00E+00	0.00E+00	4.84E-05	0.00E+00
Tc-99M	Curies	0.00E+00	0.00E+00	4.35E-05	0.00E+00
Zn-69M	Curies	0.00E+00	0.00E+00	1.72E-05	0.00E+00
Total For Period	**Curies**	**0.00E+00**	**9.61E-05**	**9.65E-04**	**0.00E+00**

Zeroes in this table indicates that no radioactivity was present at detectable levels.
See Table 1-4 for typical minimum detectable concentrations.

Table 1-2B

Hatch Nuclear Plant

RADIOACTIVE EFFLUENT RELEASE REPORT - 2010

Liquid Effluents

Unit: 2

Starting: 1-Jan-2010 Ending: 31-Dec-2010

		Batch Mode			
Nuclides Released	**Unit**	**1ST Quarter**	**2ND Quarter**	**3RD Quarter**	**4TH Quarter**
Tritium					
H-3	Curies	0.00E+00	9.92E-01	4.54E+00	0.00E+00
Dissolved And Entrained Gases					
Xe-133	Curies	0.00E+00	1.48E-05	9.21E-05	0.00E+00
Xe-135	Curies	0.00E+00	2.03E-05	2.38E-04	0.00E+00
Total For Period	**Curies**	**0.00E+00**	**3.51E-05**	**3.30E-04**	**0.00E+00**
Gross Alpha Radioactivity					
G-Alpha	Curies	0.00E+00	1.09E-07	3.69E-07	0.00E+00

Zeroes in this table indicates that no radioactivity was present at detectable levels.
See Table 1-4 for typical minimum detectable concentrations.

Table 1-2C

Hatch Nuclear Plant

RADIOACTIVE EFFLUENT RELEASE REPORT - 2010

Liquid Effluents

Unit: Site

Starting: 1-Jan-2010 Ending: 31-Dec-2010

		Continuous Mode			
Nuclides Released	**Unit**	**1ST Quarter**	**2ND Quarter**	**3RD Quarter**	**4TH Quarter**
Fission & Activation Products					
Sr-89	Curies	3.07E-05	5.12E-05	3.54E-05	3.97E-06
Total For Period	**Curies**	**3.07E-05**	**5.12E-05**	**3.54E-05**	**3.97E-06**
Tritium					
H-3	Curies	4.15E-02	4.68E-02	6.33E-02	2.10E-02
Dissolved And Entrained Gases					
No Nuclides Found	Curies	0.00E+00	0.00E+00	0.00E+00	0.00E+00
Gross Alpha Radioactivity					
No Nuclides Found	Curies	0.00E+00	0.00E+00	0.00E+00	0.00E+00

Zeroes in this table indicates that no radioactivity was present at detectable levels.
See Table 1-4 for typical minimum detectable concentrations.

Table 1-2C

Hatch Nuclear Plant

RADIOACTIVE EFFLUENT RELEASE REPORT - 2010

Liquid Effluents

Unit: Site

Starting: 1-Jan-2010 Ending: 31-Dec-2010

		Batch Mode			
Nuclides Released	**Unit**	**1ST Quarter**	**2ND Quarter**	**3RD Quarter**	**4TH Quarter**
Fission & Activation Products					
Y-92	Curies	0.00E+00	0.00E+00	3.07E-05	0.00E+00
As-76	Curies	0.00E+00	1.17E-06	2.41E-05	0.00E+00
Co-58	Curies	0.00E+00	5.92E-06	2.93E-05	0.00E+00
Co-60	Curies	0.00E+00	1.85E-04	1.58E-04	0.00E+00
Fe-55	Curies	0.00E+00	1.60E-04	7.32E-05	0.00E+00
I-131	Curies	0.00E+00	8.11E-07	2.91E-05	0.00E+00
I-133	Curies	0.00E+00	6.77E-07	4.13E-05	0.00E+00
Mn-54	Curies	0.00E+00	2.94E-05	7.89E-05	0.00E+00
Mn-56	Curies	0.00E+00	3.29E-06	1.90E-05	0.00E+00
Na-24	Curies	0.00E+00	2.15E-04	2.17E-04	0.00E+00
Nb-95	Curies	0.00E+00	3.01E-07	0.00E+00	0.00E+00
Nb-97	Curies	0.00E+00	0.00E+00	1.86E-06	0.00E+00
Sr-89	Curies	0.00E+00	2.99E-05	2.16E-04	0.00E+00
Sr-91	Curies	0.00E+00	0.00E+00	5.38E-05	0.00E+00
Sr-92	Curies	0.00E+00	0.00E+00	5.36E-06	0.00E+00
Y-91M	Curies	0.00E+00	0.00E+00	7.35E-06	0.00E+00
Zn-65	Curies	0.00E+00	2.53E-06	1.94E-05	0.00E+00
Au-199	Curies	0.00E+00	1.33E-06	0.00E+00	0.00E+00
Cs-136	Curies	0.00E+00	0.00E+00	3.70E-06	0.00E+00
Cs-137	Curies	0.00E+00	5.08E-04	1.77E-04	0.00E+00
La-140	Curies	0.00E+00	0.00E+00	4.84E-05	0.00E+00
Tc-99M	Curies	0.00E+00	0.00E+00	4.35E-05	0.00E+00
Zn-69M	Curies	0.00E+00	1.20E-06	1.72E-05	0.00E+00
Total For Period	**Curies**	**0.00E+00**	**1.14E-03**	**1.29E-03**	**0.00E+00**

Zeroes in this table indicates that no radioactivity was present at detectable levels.
See Table 1-4 for typical minimum detectable concentrations.

Table 1-2C

Hatch Nuclear Plant

RADIOACTIVE EFFLUENT RELEASE REPORT - 2010

Liquid Effluents

Unit: Site

Starting: 1-Jan-2010 Ending: 31-Dec-2010

		Batch Mode			
Nuclides Released	**Unit**	**1ST Quarter**	**2ND Quarter**	**3RD Quarter**	**4TH Quarter**
Tritium					
H-3	Curies	0.00E+00	1.12E+01	1.54E+01	0.00E+00
Dissolved And Entrained Gases					
Xe-133	Curies	0.00E+00	1.48E-05	9.21E-05	0.00E+00
Xe-135	Curies	0.00E+00	2.07E-05	2.39E-04	0.00E+00
Total For Period	**Curies**	**0.00E+00**	**3.55E-05**	**3.31E-04**	**0.00E+00**
Gross Alpha Radioactivity					
G-Alpha	Curies	0.00E+00	6.27E-07	1.42E-06	0.00E+00

Zeroes in this table indicates that no radioactivity was present at detectable levels.
See Table 1-4 for typical minimum detectable concentrations.

Table 1-3A

Hatch Nuclear Plant

RADIOACTIVE EFFLUENT RELEASE REPORT - 2010

Doses to a member of the public due to Liquid Releases

Unit: 1

Starting: 1-Jan-2010 Ending: 31-Dec-2010

Cumulative Doses Per Quarter

Organ	ODCM Lmt	Units	1ST Qtr	% ODCM	2ND Qtr	% ODCM	3RD Qtr	% ODCM	4TH Qtr	% ODCM
Bone	5.00E+00	mRem	0.00E+00	0.00E+00	1.88E-03	3.76E-02	5.30E-04	1.06E-02	0.00E+00	0.00E+00
GI-Lli	5.00E+00	mRem	0.00E+00	0.00E+00	2.25E-04	4.50E-03	1.24E-04	2.49E-03	0.00E+00	0.00E+00
Kidney	5.00E+00	mRem	0.00E+00	0.00E+00	9.49E-04	1.90E-02	3.21E-04	6.41E-03	0.00E+00	0.00E+00
Liver	5.00E+00	mRem	0.00E+00	0.00E+00	2.65E-03	5.30E-02	8.01E-04	1.60E-02	0.00E+00	0.00E+00
Lung	5.00E+00	mRem	0.00E+00	0.00E+00	3.67E-04	7.34E-03	1.56E-04	3.13E-03	0.00E+00	0.00E+00
Thyroid	5.00E+00	mRem	0.00E+00	0.00E+00	7.90E-05	1.58E-03	7.46E-05	1.49E-03	0.00E+00	0.00E+00
Total Body	1.50E+00	mRem	0.00E+00	0.00E+00	1.77E-03	1.18E-01	5.53E-04	3.69E-02	0.00E+00	0.00E+00

Cumulative Doses per Year

Organ	ODCM Lmt	Units	Year to Ending Date	% ODCM	Receptor	Limit
Bone	1.00E+01	mRem	2.41E-03	2.41E-02	MAX INDIVIDUAL LIQUID / Adult	Ann Cum Organ Liq Dose
GI-Lli	1.00E+01	mRem	3.50E-04	3.50E-03	MAX INDIVIDUAL LIQUID / Adult	Ann Cum Organ Liq Dose
Kidney	1.00E+01	mRem	1.27E-03	1.27E-02	MAX INDIVIDUAL LIQUID / Adult	Ann Cum Organ Liq Dose
Liver	1.00E+01	mRem	3.45E-03	3.45E-02	MAX INDIVIDUAL LIQUID / Adult	Ann Cum Organ Liq Dose
Lung	1.00E+01	mRem	5.23E-04	5.23E-03	MAX INDIVIDUAL LIQUID / Adult	Ann Cum Organ Liq Dose
Thyroid	1.00E+01	mRem	1.54E-04	1.54E-03	MAX INDIVIDUAL LIQUID / Adult	Ann Cum Organ Liq Dose
Total Body	3.00E+00	mRem	2.32E-03	7.75E-02	MAX INDIVIDUAL LIQUID / Adult	Ann Cum Tot Body Liq Dose

Table 1-3B

Hatch Nuclear Plant

RADIOACTIVE EFFLUENT RELEASE REPORT - 2010

Doses to a member of the public due to Liquid Releases

Unit: 2

Starting: 1-Jan-2010 Ending: 31-Dec-2010

Cumulative Doses Per Quarter

Organ	ODCM Lmt	Units	1ST Qtr	% ODCM	2ND Qtr	% ODCM	3RD Qtr	% ODCM	4TH Qtr	% ODCM
Bone	5.00E+00	mRem	5.37E-06	1.07E-04	1.56E-05	3.11E-04	1.26E-04	2.52E-03	8.98E-07	1.80E-05
GI-LI	5.00E+00	mRem	1.45E-06	2.90E-05	1.70E-05	3.41E-04	1.25E-04	2.50E-03	4.60E-07	9.20E-06
Kidney	5.00E+00	mRem	5.88E-07	1.18E-05	1.33E-05	2.67E-04	9.27E-05	1.85E-03	3.16E-07	6.32E-06
Liver	5.00E+00	mRem	5.88E-07	1.18E-05	2.20E-05	4.41E-04	1.88E-04	3.76E-03	3.16E-07	6.32E-06
Lung	5.00E+00	mRem	5.88E-07	1.18E-05	9.93E-06	1.99E-04	5.36E-05	1.07E-03	3.16E-07	6.32E-06
Thyroid	5.00E+00	mRem	5.88E-07	1.18E-05	1.21E-05	2.42E-04	2.68E-04	5.35E-03	3.16E-07	6.32E-06
Total Body	1.50E+00	mRem	7.42E-07	4.95E-05	1.78E-05	1.19E-03	1.40E-04	9.31E-03	3.42E-07	2.28E-05

Cumulative Doses per Year

Organ	ODCM Lmt	Units	Year to Ending Date	% ODCM	Receptor	Limit
Bone	1.00E+01	mRem	1.48E-04	1.48E-03	MAX INDIVIDUAL LIQUID / Adult	Ann Cum Organ Liq Dose
GI-LI	1.00E+01	mRem	1.44E-04	1.44E-03	MAX INDIVIDUAL LIQUID / Adult	Ann Cum Organ Liq Dose
Kidney	1.00E+01	mRem	1.07E-04	1.07E-03	MAX INDIVIDUAL LIQUID / Adult	Ann Cum Organ Liq Dose
Liver	1.00E+01	mRem	2.11E-04	2.11E-03	MAX INDIVIDUAL LIQUID / Adult	Ann Cum Organ Liq Dose
Lung	1.00E+01	mRem	6.44E-05	6.44E-04	MAX INDIVIDUAL LIQUID / Adult	Ann Cum Organ Liq Dose
Thyroid	1.00E+01	mRem	2.81E-04	2.81E-03	MAX INDIVIDUAL LIQUID / Adult	Ann Cum Organ Liq Dose
Total Body	3.00E+00	mRem	1.59E-04	5.28E-03	MAX INDIVIDUAL LIQUID / Adult	Ann Cum Tot Body Liq Dose

Table 1-4
E. I. HATCH NUCLEAR PLANT
RADIOACTIVE EFFLUENT RELEASE REPORT - 2010
MINIMUM DETECTABLE CONCENTRATIONS - LIQUID SAMPLE ANALYSES
STARTING: 1-Jan-2010 ENDING: 31-Dec-2010

The values in this table represent a priori Minimum Detectable Concentrations (MDC) that are typically achieved in laboratory analyses of liquid radwaste samples.

RADIONUCLIDE	***MDC***	***UNITS***
Mn-54	1.97E-08	uCi/ml
Fe-59	3.94E-08	uCi/ml
Co-58	1.59E-08	uCi/ml
Co-60	1.72E-08	uCi/ml
Zn-65	2.92E-08	uCi/ml
Mo-99	1.20E-07	uCi/ml
Cs-134	1.75E-08	uCi/ml
Cs-137	1.62E-08	uCi/ml
Ce-141	1.92E-08	uCi/ml
Ce-144	8.83E-08	uCi/ml
I-131	1.43E-08	uCi/ml
Xe-135	1.03E-08	uCi/ml
Fe-55	2.34E-08	uCi/ml
Sr-89	1.44E-08	uCi/ml
Sr-90	8.50E-09	uCi/ml
H-3	6.00E-07	uCi/ml

Table 1-5A

Hatch Nuclear Plant

RADIOACTIVE EFFLUENT RELEASE REPORT - 2010

Liquid Effluents - Batch Release Summary

Unit: 1

Starting: 1-Jan-2010 Ending: 31-Dec-2010

Liquid Releases	Units	1ST Quarter	2ND Quarter	3RD Quarter	4TH Quarter	Year Totals
1. Number of batch releases		0	39	57	0	96
2. Total time period for Batch releases	(Minutes)	0.00E+00	5.25E+03	7.69E+03	0.00E+00	1.29E+04
3. Maximum time period for a batch release	(Minutes)	0.00E+00	1.83E+02	1.75E+02	0.00E+00	1.83E+02
4. Average time period for a batch release	(Minutes)	0.00E+00	1.35E+02	1.35E+02	0.00E+00	1.35E+02
5. Minimum time period for a batch release	(Minutes)	0.00E+00	8.30E+01	8.30E+01	0.00E+00	8.30E+01
6. Average stream flow during periods of release of liquid effluent into a flowing stream *	(CFS)	2.76E+04	3.51E+04	1.12E+04	3.55E+03	1.93E+04

Replace this text in the Station Parameters

Table 1-5B

Hatch Nuclear Plant

RADIOACTIVE EFFLUENT RELEASE REPORT - 2010

Liquid Effluents - Batch Release Summary

Unit: 2

Starting: 1-Jan-2010 Ending: 31-Dec-2010

Liquid Releases	Units	1ST Quarter	2ND Quarter	3RD Quarter	4TH Quarter	Year Totals
1. Number of batch releases		0	7	34	0	41
2. Total time period for Batch releases	(Minutes)	0.00E+00	6.90E+02	3.71E+03	0.00E+00	4.40E+03
3. Maximum time period for a batch release	(Minutes)	0.00E+00	1.14E+02	1.25E+02	0.00E+00	1.25E+02
4. Average time period for a batch release	(Minutes)	0.00E+00	9.86E+01	1.09E+02	0.00E+00	1.07E+02
5. Minimum time period for a batch release	(Minutes)	0.00E+00	8.40E+01	7.30E+01	0.00E+00	7.30E+01
6. Average stream flow during periods of release of liquid effluent into a flowing stream *	(CFS)	2.76E+04	3.51E+04	1.12E+04	3.55E+03	1.93E+04

Replace this text in the Station Parameters

Table 1-6A

Hatch Nuclear Plant

RADIOACTIVE EFFLUENT RELEASE REPORT - 2010

Liquid Effluents - Abnormal Release Summary

Unit: 1

Starting: 1-Jan-2010 Ending: 31-Dec-2010

Liquid Releases	Units	1ST Quarter	2ND Quarter	3RD Quarter	4TH Quarter	Year Totals
1. Number of Releases		0	0	0	0	0
2. Total Time For All Releases	(Minutes)	0.00E+00	0.00E+00	0.00E+00	0.00E+00	0.00E+00
3. Maximum Time For A Release	(Minutes)	0.00E+00	0.00E+00	0.00E+00	0.00E+00	0.00E+00
4. Average Time For A Release	(Minutes)	0.00E+00	0.00E+00	0.00E+00	0.00E+00	0.00E+00
5. Minimum Time For A Release	(Minutes)	0.00E+00	0.00E+00	0.00E+00	0.00E+00	0.00E+00
6. Total activity for all releases	(Curies)	0.00E+00	0.00E+00	0.00E+00	0.00E+00	0.00E+00

Table 1-6B

Hatch Nuclear Plant

RADIOACTIVE EFFLUENT RELEASE REPORT - 2010

Liquid Effluents - Abnormal Release Summary

Unit: 2

Starting: 1-Jan-2010 Ending: 31-Dec-2010

Liquid Releases	Units	1ST Quarter	2ND Quarter	3RD Quarter	4TH Quarter	Year Totals
1. Number of Releases		0	0	0	0	0
2. Total Time For All Releases	(Minutes)	0.00E+00	0.00E+00	0.00E+00	0.00E+00	0.00E+00
3. Maximum Time For A Release	(Minutes)	0.00E+00	0.00E+00	0.00E+00	0.00E+00	0.00E+00
4. Average Time For A Release	(Minutes)	0.00E+00	0.00E+00	0.00E+00	0.00E+00	0.00E+00
5. Minimum Time For A Release	(Minutes)	0.00E+00	0.00E+00	0.00E+00	0.00E+00	0.00E+00
6. Total activity for all releases	(Curies)	0.00E+00	0.00E+00	0.00E+00	0.00E+00	0.00E+00

Table 1-6C

Hatch Nuclear Plant

RADIOACTIVE EFFLUENT RELEASE REPORT - 2010

Liquid Effluents - Abnormal Release Summary

Unit: Site

Starting: 1-Jan-2010 Ending: 31-Dec-2010

Liquid Releases	Units	1ST Quarter	2ND Quarter	3RD Quarter	4TH Quarter	Year Totals
1. Number of Releases		0	0	0	0	0
2. Total Time For All Releases	(Minutes)	0.00E+00	0.00E+00	0.00E+00	0.00E+00	0.00E+00
3. Maximum Time For A Release	(Minutes)	0.00E+00	0.00E+00	0.00E+00	0.00E+00	0.00E+00
4. Average Time For A Release	(Minutes)	0.00E+00	0.00E+00	0.00E+00	0.00E+00	0.00E+00
5. Minimum Time For A Release	(Minutes)	0.00E+00	0.00E+00	0.00E+00	0.00E+00	0.00E+00
6. Total activity for all releases	(Curies)	0.00E+00	0.00E+00	0.00E+00	0.00E+00	0.00E+00

2.0 *Gaseous Effluents*

2.1 Regulatory Requirements

The ODCM Specifications presented in this section are for Unit 1 and Unit 2.

2.1.1 Dose Rate Limits

The dose rate due to radioactive materials released in gaseous effluents from the site to areas at and beyond the SITE BOUNDARY shall be limited to the following:

a. For noble gases: Less than or equal to 500 mrems/yr. to the whole body and less than or equal to 3000 mrems/yr. to the skin and,

b. For Iodine-131, Iodine-133, tritium and for all radionuclides in particulate form with half lives greater than 8 days: Less than or equal to 1500 mrems/yr. to any organ.

2.1.2 Air Doses Due To Noble Gases in Gaseous Effluents

The air dose due to noble gases released in gaseous effluents, from each unit, to areas at and beyond the SITE BOUNDARY, shall be limited to the following:

a. During any calendar quarter: Less than or equal to 5 mrads for gamma radiation and less than or equal to 10 mrads for beta radiation, and

b. During any calendar year: Less than or equal to 10 mrads for gamma radiation and less than or equal to 20 mrads for beta radiation.

2.1.3 Doses To A Member of the Public

The dose to a MEMBER OF THE PUBLIC from Iodine-131, Iodine-133, tritium and all radionuclides in particulate form with half-lives greater than 8 days, in gaseous effluents released from each unit, to areas at and beyond the SITE BOUNDARY, shall be limited to the following.

a. During any calendar quarter: Less than or equal to 7.5 mrems to any organ.

b. During any calendar year: Less than or equal to 15 mrems to any organ.

2.2 *Measurements and Approximations of Total Radioactivity*

Waste gas release at Plant Hatch is confined to four paths: main stack (also called the offgas vent), Unit 1 reactor building vent; Unit 2 reactor building vent, and the recombiner building vent. Each of these four paths is continuously monitored for gaseous radioactivity.

2.2.1 *Sample Collection and Analysis*

Each of the four gaseous effluent paths is equipped with an integrating-type sample collection device for collecting particulates and iodines. Unless required more frequently under certain circumstances, samples are collected as follows:

1. Noble gas samples are collected by grab sampling monthly.

2. Tritium samples are collected by grab sampling monthly.

3. Radioiodine samples are collected by pulling the sample stream through a charcoal cartridge over a 7-day period.

4. Particulates are collected by pulling the sample stream through a particulate filter over a 7-day period.

5. The 7-day particulate filters above are analyzed for gross alpha activity.

6. Quarterly composite samples are prepared from the particulate filters collected over the previous quarter and the samples are analyzed for Sr-89 and Sr-90.

Sample analyses results and release flow rates from the four release points form the basis for calculating released quantities of radionuclide-specific radioactivity, the dose rates associated with gaseous releases, and the cumulative doses for the current quarter and year. This task is normally performed with computer assistance.

The noble gas grab sample analysis results are used along with maximum expected release flow rates from each of the four vents to calculate monitor setpoints for the gaseous effluent monitors serving the four release points. Calculation of monitor setpoints is described in the ODCM. Typically achieved minimum detectable concentrations for gaseous effluents sample and analyses are reported in Table 2-6.

For each release period, released radioactivity, dose rates, and cumulative doses are calculated. Cumulative dose results are tabulated along with the percent of the ODCM limit for each release, for the current quarter and year.

2.2.2 Total Quantities of Radioactivity, Dose Rates, and Cumulative Doses

The methods for determining release quantities of radioactivity, dose rates, and cumulative doses follow:

2.2.2.1 Fission and Activation Gases

The released radioactivity is determined using sample analyses results collected as described above and the average release flow rates over the period represented by the collected sample.

Dose rates due to noble gases, radioiodines, tritium, and particulates are calculated (with computer assistance). The calculated dose rates are compared to the dose rate limits specified in ODCM 3.1.2 for noble gases, radioiodine, tritium, and particulates. Dose rate calculation methodology is presented in the ODCM.

Beta and gamma air doses due to noble gases are calculated for the location in the unrestricted area with the potential for the highest exposure due to gaseous releases. Air doses are calculated for each release period and cumulative totals are kept for each unit for the calendar quarter and year. Cumulative air doses are compared to the dose limits specified in ODCM 3.1.3. The current percent of the ODCM limits are shown on the printout for each release period. Air dose calculation methodology is presented in the ODCM.

2.2.2.2 Radioiodine, Tritium and Particulate Releases

Released quantities of radioiodines are determined using the weekly samples and release flow rates for the four release points. Radioiodine concentrations are determined by gamma spectroscopy.

Release quantities of particulates are determined using the weekly (filter) samples and release flow rates for the four release points. Gamma spectroscopy is used to quantify concentrations of principal gamma emitters.

After each quarter, the particulate filters from each vent are combined, fused, and a strontium separation is performed. Since sample flows and vent flows are almost constant over each quarterly period the filters from each vent can be dissolved together. Decay corrections are performed back to the middle of the quarterly collection period. If Sr-89 or Sr-90 is not detected, MDC's are calculated. Strontium concentrations are input into the composite file of the computer and used for release dose rate and dose calculations for a Member of the Public.

Tritium samples are obtained monthly from each vent by passing the sample stream through a cold trap. The grams of water vapor/cubic foot is measured upstream of the cold trap in order to alleviate the difficulties in determining water vapor collection efficiencies. The tritium samples are analyzed by an independent laboratory and the results are furnished in uCi/ml of water. The tritium concentration in water is converted to the tritium concentration in air and this value is input into the composite file of the computer and used in release, dose rate, and individual dose calculations.

Dose rates due to radioiodine, tritium and particulates are calculated for a hypothetical child exposed to the inhalation pathway at the location in the unrestricted area where the potential dose rate is expected to be the highest. Dose rates are calculated, for each release point for each release period, and the dose rates from each release point are compared to the dose rate limits as described in ODCM 3.1.2 Doses due to radioiodine, tritium and particulates are calculated for the controlling receptor, which is described in the ODCM. Doses to a Member of the Public are calculated for each release period, and cumulative totals are kept for each unit, for the current calendar quarter and year. Cumulative doses are compared to the dose limits specified in ODCM 3.1.4. The current percent of ODCM limits are shown on the printout for each release period.

2.2.2.3 Gross Alpha Release

The gross alpha release is computed each month by counting the particulate filters, for each week for gross alpha activity in a proportional counter. The four or five weeks' numbers are then recorded on a data sheet and the activity is summed at the end of the month. The summed activity is then divided by the total monthly volume to determine the concentration. This concentration is input into the composite file of the computer and used for release calculations.

2.2.3 Total Error Estimation

The total or maximum error associated with the effluent measurement will include the cumulative errors resulting from the total process of sampling and measurement. Due to the difficulty with assigning error terms for each parameter affecting the final measurement, detailed statistical evaluation of error is not suggested. The objective is to obtain an overall estimate of the error associated with measurements of radioactive materials released in liquid and gaseous effluents and solid waste.

Estimated errors are associated with counting equipment calibration, counting statistics, vent-flow rates, vent sample flow rates, non steady release rates, chemical yield factors and sample losses for such items as charcoal cartridges.

Fission and activation total release was calculated from sample analysis results and release point flow rates.

Statistical error	60%
Counting equipment calibration	10%
Vent flow rates	10%
Non-steady release rates	20%
TOTAL ERROR	65%

I-131 releases were calculated from each weekly sample.

Statistical error	60%
Counting equipment calibration	10%
Vent flow rates	10%
Vent sample flow rates	10%
Non-steady release rates	10%
Losses from charcoal cartridges	10%
TOTAL ERROR	64%

Particulates with half lives greater than 8 days releases were calculated from sample analysis results and release point flow rates.

Statistical error	60%
Counting equipment calibration	10%
Vent flow rates	10%
Vent sample flow rates	10%
Non-steady release rates	10%
TOTAL ERROR	63%

Total tritium releases were calculated from sample analysis results and release point flow rates.

Water vapor in sample stream determination	20%
Vent flow rates	10%
Counting calibration and statistics	10%
Non-steady release rates	50%
TOTAL ERROR	56%

Gross Alpha radioactivity was calculated from sample analysis results and release point flow rates.

Statistical error	60%
Counting equipment calibration	10%
Vent flow rates	10%
Vent sample flow rates	10%
Non-steady release rates	10%
TOTAL ERROR	63%

2.3 Gaseous Effluent Release Data

Regulatory Guide 1.21 Tables 1A, 1B, and 1C are found in this report as Tables 2-1A, 2-1B, 2-1C, 2-2A, ,2-2B, 2-2C, 2-3A, 2-3B, 2-3C. Data is presented on a quarterly basis as required by Regulatory Guide 1.21 for all quarters.

To complete table 2-1A, 2-1B, and 2-1C, total release for each of the four categories (fission and activation gases, iodines, particulates, and tritium) was divided by the number of seconds in the quarter to obtain a release rate in uCi/second for each category for each quarter. However, the percent of the ODCM limits are not applicable because we have no curie limits for gaseous releases. Applicable limits are expressed in terms of dose. Noble gases are limited as specified in ODCM 3.1.2. The other three categories (tritium, radioiodines, and particulates) are limited as a group as specified in ODCM 3.1.2.

Dose rates due to noble gas releases, and due to radioiodine, tritium, and particulates were calculated as part of the pre-release and post-release permits on individual permits. No limits were exceeded for this reporting period.

Gross alpha radioactivity is reported in Table 2-1A, 2-1B, and 2-1C, as curies released in each quarter.

Limits for cumulative beta and gamma air doses due to noble gases are specified in ODCM 3.1.3. Cumulative air doses are presented in Table 2-4A and 2-4B, along with percent of ODCM limits.

Limits for cumulative doses to a Member of the Public due to radioiodine, tritium and particulates, are specified in ODCM 3.1.4. Cumulative doses to a Member of the Public doses are presented in Table 2-5A, and 2-5B, along with percent of ODCM limits.

2.4 Radiological Impact Due to Gaseous Releases

Dose rates due to noble gas release were calculated for the site in accordance with ODCM 3.1.2. Dose rates due to radioiodine, tritium, and particulates in gaseous releases were calculated in accordance with ODCM 3.1.2.

These dose rates were calculated as part of the pre-release and post release on individual release permits. No limits were exceeded for this reporting period.

Cumulative air doses due to noble gas releases were calculated for each unit in accordance with ODCM 3.1.3. These results are presented in Tables 2-4A and 2-4B.

Cumulative doses to a Member of the Public due to radioiodine, tritium and particulates in gaseous releases were calculated for each unit in accordance with ODCM 3.1.4. These results are presented in Tables 2-5A and 2-5B.

Dose rates and doses were calculated using the methodology presented in the ODCM.

2.5 Gaseous Effluents - Batch Releases

There are no gaseous batch releases from Plant Hatch.

2.6 Gaseous Effluents - Abnormal Releases

There were no unplanned or uncontrolled gaseous releases during this reporting period.

Table 2-1A

Hatch Nuclear Plant

RADIOACTIVE EFFLUENT RELEASE REPORT - 2010

Gaseous Effluents - Summation Of All Releases

Unit: 1

Starting: 1-Jan-2010 Ending: 31-Dec-2010

Type of Effluent	Units	1ST Quarter	2ND Quarter	3RD Quarter	4TH Quarter
A. Fission And Activation Gases					
1. Total Release	Curies	6.78E+00	1.42E+01	2.16E+01	2.47E+01
2. Average Release rate for period	uCi/sec	8.61E-01	1.80E+00	2.74E+00	3.13E+00
3. Percent of Applicable Limit	%	*	*	*	*
B. Radioiodines					
1. Total Iodine-131	Curies	1.79E-04	3.30E-04	2.02E-04	1.38E-04
2. Average Release rate for period	uCi/sec	2.27E-05	4.19E-05	2.57E-05	1.74E-05
3. Percent of Applicable Limit	%	*	*	*	*
C. Particulates					
1. Particulates (Half-Lives > 8 Days)	Curies	2.18E-05	5.42E-05	7.22E-05	4.86E-05
2. Average Release rate for period	uCi/sec	2.77E-06	6.88E-06	9.15E-06	6.167E-06
3. Percent of Applicable Limit	%	*	*	*	*
D. Tritium					
1. Total Release	Curies	1.76E+02	5.04E+00	5.52E+00	4.32E+00
2. Average Release rate for period	uCi/sec	2.23E+01	6.39E-01	7.00E-01	5.48E-01
3. Percent of Applicable Limit	%	*	*	*	*
E. Gross Alpha					
1. Total Release	Curies	0.00E+00	0.00E+00	0.00E+00	0.00E+00
2. Average Release rate for period	uCi/sec	0.00E+00	0.00E+00	0.00E+00	0.00E+00

* Applicable limits are expressed in terms of dose. See Tables 2-4A, 2-4B, 2-5A, 2-5B of this report.

Table 2-1B

Hatch Nuclear Plant

RADIOACTIVE EFFLUENT RELEASE REPORT - 2010

Gaseous Effluents - Summation Of All Releases

Unit: 2

Starting: 1-Jan-2010 Ending: 31-Dec-2010

Type of Effluent	Units	1ST Quarter	2ND Quarter	3RD Quarter	4TH Quarter
A. Fission And Activation Gases					
1. Total Release	Curies	1.47E+01	1.42E+01	2.16E+01	2.47E+01
2. Average Release rate for period	uCi/sec	1.87E+00	1.80E+00	2.74E+00	3.13E+00
3. Percent of Applicable Limit	%	*	*	*	*
B. Radioiodines					
1. Total Iodine-131	Curies	2.56E-04	1.51E-04	2.27E-04	1.93E-04
2. Average Release rate for period	uCi/sec	3.25E-05	1.92E-05	2.88E-05	2.45E-05
3. Percent of Applicable Limit	%	*	*	*	*
C. Particulates					
1. Particulates (Half-Lives > 8 Days)	Curies	4.67E-05	4.86E-05	8.22E-05	5.70E-05
2. Average Release rate for period	uCi/sec	5.92E-06	6.16E-06	1.04E-05	7.232E-06
3. Percent of Applicable Limit	%	*	*	*	*
D. Tritium					
1. Total Release	Curies	3.95E+00	4.36E+00	7.48E+00	8.71E+00
2. Average Release rate for period	uCi/sec	5.02E-01	5.53E-01	9.48E-01	1.11E+00
3. Percent of Applicable Limit	%	*	*	*	*
E. Gross Alpha					
1. Total Release	Curies	0.00E+00	0.00E+00	0.00E+00	0.00E+00
2. Average Release rate for period	uCi/sec	0.00E+00	0.00E+00	0.00E+00	0.00E+00

* Applicable limits are expressed in terms of dose. See Tables 2-4A, 2-4B, 2-5A, 2-5B of this report.

Table 2-1C

Hatch Nuclear Plant

RADIOACTIVE EFFLUENT RELEASE REPORT - 2010

Gaseous Effluents - Summation Of All Releases

Unit: Site

Starting: 1-Jan-2010 Ending: 31-Dec-2010

Type of Effluent	Units	1ST Quarter	2ND Quarter	3RD Quarter	4TH Quarter
A. Fission And Activation Gases					
1. Total Release	Curies	2.15E+01	2.84E+01	4.32E+01	4.94E+01
2. Average Release rate for period	uCi/sec	2.73E+00	3.60E+00	5.48E+00	6.26E+00
3. Percent of Applicable Limit	%	*	*	*	*
B. Radioiodines					
1. Total Iodine-131	Curies	4.35E-04	4.81E-04	4.29E-04	3.31E-04
2. Average Release rate for period	uCi/sec	5.52E-05	6.10E-05	5.44E-05	4.19E-05
3. Percent of Applicable Limit	%	*	*	*	*
C. Particulates					
1. Particulates (Half-Lives > 8 Days)	Curies	6.85E-05	1.03E-04	1.54E-04	1.06E-04
2. Average Release rate for period	uCi/sec	8.69E-06	1.30E-05	1.96E-05	1.340E-05
3. Percent of Applicable Limit	%	*	*	*	*
D. Tritium					
1. Total Release	Curies	1.80E+02	9.40E+00	1.30E+01	1.30E+01
2. Average Release rate for period	uCi/sec	2.28E+01	1.19E+00	1.65E+00	1.65E+00
3. Percent of Applicable Limit	%	*	*	*	*
E. Gross Alpha					
1. Total Release	Curies	0.00E+00	0.00E+00	0.00E+00	0.00E+00
2. Average Release rate for period	uCi/sec	0.00E+00	0.00E+00	0.00E+00	0.00E+00

* Applicable limits are expressed in terms of dose. See Tables 2-4A, 2-4B, 2-5A, 2-5B of this report.

Table 2-2A

Hatch Nuclear Plant

RADIOACTIVE EFFLUENT RELEASE REPORT - 2010

Gaseous Effluents - Elevated Level Releases

Unit: 1

Starting: 1-Jan- 2010 Ending: 31-Dec-2010

		Continuous Mode			
Nuclides Released	**Unit**	**1ST Quarter**	**2ND Quarter**	**3RD Quarter**	**4TH Quarter**
Fission Gases					
Ar-41	Curies	0.00E+00	2.81E-01	2.57E-01	0.00E+00
Kr-85M	Curies	4.36E-01	8.38E-01	6.41E-01	1.07E+00
Kr-87	Curies	7.16E-01	2.23E+00	2.85E+00	2.89E+00
Xe-133	Curies	1.10E+00	1.26E+00	6.08E-01	0.00E+00
Xe-135M	Curies	6.06E-01	3.52E+00	2.67E+00	4.19E+00
Xe-135	Curies	1.80E+00	1.94E+00	2.79E+00	2.67E+00
Xe-138	Curies	2.13E+00	4.13E+00	1.18E+01	1.39E+01
Total For Period	**Curies**	**6.78E+00**	**1.42E+01**	**2.16E+01**	**2.47E+01**
Iodines					
I-131	Curies	1.66E-04	3.15E-04	1.54E-04	1.16E-04
I-133	Curies	2.80E-04	1.42E-04	2.33E-04	1.63E-04
Total For Period	**Curies**	**4.46E-04**	**4.56E-04**	**3.87E-04**	**2.78E-04**

If Not Detected, Nuclide is Not Reported. Zeroes in this table indicates that no radioactivity was present at detectable levels.
See Table 2-6 for typical minimum detectable concentrations.

Table 2-2A

Hatch Nuclear Plant

RADIOACTIVE EFFLUENT RELEASE REPORT - 2010

Gaseous Effluents - Elevated Level Releases

Unit: 1

Starting: 1-Jan- 2010 Ending: 31-Dec-2010

		Continuous Mode			
Nuclides Released	**Unit**	**1ST Quarter**	**2ND Quarter**	**3RD Quarter**	**4TH Quarter**
Particulates					
Mn-54	Curies	1.13E-07	0.00E+00	0.00E+00	0.00E+00
Co-58	Curies	0.00E+00	0.00E+00	0.00E+00	2.51E-08
Co-60	Curies	4.70E-08	0.00E+00	0.00E+00	6.10E-08
Sr-89	Curies	1.13E-05	3.12E-05	4.14E-05	2.64E-05
Sr-90	Curies	1.01E-08	5.38E-08	4.71E-09	2.17E-07
Cs-137	Curies	3.13E-08	1.31E-07	3.93E-07	2.02E-07
Ba-140	Curies	4.23E-06	1.54E-05	2.56E-05	1.78E-05
I-131P	Curies	8.12E-08	5.27E-08	0.00E+00	2.59E-08
Total For Period	**Curies**	**1.58E-05**	**4.68E-05**	**6.73E-05**	**4.47E-05**
Tritium					
H-3	Curies	6.34E-01	7.30E-01	1.12E+00	1.19E+00
Gross Alpha					
No Nuclides Found	Curies	0.00E+00	0.00E+00	0.00E+00	0.00E+00

If Not Detected, Nuclide is Not Reported. Zeroes in this table indicates that no radioactivity was present at detectable levels.
See Table 2-6 for typical minimum detectable concentrations.

Table 2-2A

Hatch Nuclear Plant

RADIOACTIVE EFFLUENT RELEASE REPORT - 2010

Gaseous Effluents - Elevated Level Releases

Unit: 1

Starting: 1-Jan- 2010 Ending: 31-Dec-2010

		Batch Mode			
Nuclides Released	**Unit**	**1ST Quarter**	**2ND Quarter**	**3RD Quarter**	**4TH Quarter**
Fission Gases					
No Nuclides Found	Curies	0.00E+00	0.00E+00	0.00E+00	0.00E+00
Iodines					
No Nuclides Found	Curies	0.00E+00	0.00E+00	0.00E+00	0.00E+00
Particulates					
No Nuclides Found	Curies	0.00E+00	0.00E+00	0.00E+00	0.00E+00
Tritium					
No Nuclides Found	Curies	0.00E+00	0.00E+00	0.00E+00	0.00E+00
Gross Alpha					
No Nuclides Found	Curies	0.00E+00	0.00E+00	0.00E+00	0.00E+00

If Not Detected, Nuclide is Not Reported. Zeroes in this table indicates that no radioactivity was present at detectable levels.
See Table 2-6 for typical minimum detectable concentrations.

Table 2-2B

Hatch Nuclear Plant

RADIOACTIVE EFFLUENT RELEASE REPORT - 2010

Gaseous Effluents - Elevated Level Releases

Unit: 2

Starting: 1-Jan- 2010 Ending: 31-Dec-2010

		Continuous Mode			
Nuclides Released	**Unit**	**1ST Quarter**	**2ND Quarter**	**3RD Quarter**	**4TH Quarter**
Fission Gases					
Ar-41	Curies	0.00E+00	2.81E-01	2.57E-01	0.00E+00
Kr-85M	Curies	8.60E-01	8.38E-01	6.41E-01	1.07E+00
Kr-87	Curies	2.00E+00	2.23E+00	2.85E+00	2.89E+00
Xe-133	Curies	3.50E+00	1.26E+00	6.08E-01	0.00E+00
Xe-135M	Curies	8.38E-01	3.52E+00	2.67E+00	4.19E+00
Xe-135	Curies	4.58E+00	1.94E+00	2.79E+00	2.67E+00
Xe-138	Curies	2.94E+00	4.13E+00	1.18E+01	1.39E+01
Total For Period	**Curies**	**1.47E+01**	**1.42E+01**	**2.16E+01**	**2.47E+01**
Iodines					
I-131	Curies	2.18E-04	1.04E-04	1.54E-04	1.16E-04
I-133	Curies	3.35E-04	1.29E-04	2.33E-04	1.63E-04
Total For Period	**Curies**	**5.53E-04**	**2.33E-04**	**3.87E-04**	**2.78E-04**

If Not Detected, Nuclide is Not Reported. Zeroes in this table indicates that no radioactivity was present at detectable levels.
See Table 2-6 for typical minimum detectable concentrations.

Table 2-2B

Hatch Nuclear Plant

RADIOACTIVE EFFLUENT RELEASE REPORT - 2010

Gaseous Effluents - Elevated Level Releases

Unit: 2

Starting: 1-Jan- 2010 Ending: 31-Dec-2010

		Continuous Mode			
Nuclides Released	**Unit**	**1ST Quarter**	**2ND Quarter**	**3RD Quarter**	**4TH Quarter**
Particulates					
Mn-54	Curies	3.39E-07	0.00E+00	0.00E+00	0.00E+00
Co-58	Curies	0.00E+00	0.00E+00	0.00E+00	2.51E-08
Co-60	Curies	1.41E-07	0.00E+00	0.00E+00	6.10E-08
Sr-89	Curies	2.54E-05	2.42E-05	4.14E-05	2.64E-05
Sr-90	Curies	2.28E-08	4.18E-08	4.71E-09	2.17E-07
Cs-137	Curies	7.74E-08	1.31E-07	3.93E-07	2.02E-07
Ba-140	Curies	1.03E-05	1.46E-05	2.56E-05	1.78E-05
I-131P	Curies	8.12E-08	0.00E+00	0.00E+00	2.59E-08
Total For Period	**Curies**	**3.63E-05**	**3.90E-05**	**6.73E-05**	**4.47E-05**
Tritium					
H-3	Curies	1.06E+00	5.86E-01	1.12E+00	1.19E+00
Gross Alpha					
No Nuclides Found	Curies	0.00E+00	0.00E+00	0.00E+00	0.00E+00

If Not Detected, Nuclide is Not Reported. Zeroes in this table indicates that no radioactivity was present at detectable levels.
See Table 2-6 for typical minimum detectable concentrations.

Table 2-2B

Hatch Nuclear Plant

RADIOACTIVE EFFLUENT RELEASE REPORT - 2010

Gaseous Effluents - Elevated Level Releases

Unit: 2

Starting: 1-Jan- 2010 Ending: 31-Dec-2010

		Batch Mode			
Nuclides Released	Unit	1ST Quarter	2ND Quarter	3RD Quarter	4TH Quarter
Fission Gases					
No Nuclides Found	Curies	0.00E+00	0.00E+00	0.00E+00	0.00E+00
Iodines					
No Nuclides Found	Curies	0.00E+00	0.00E+00	0.00E+00	0.00E+00
Particulates					
No Nuclides Found	Curies	0.00E+00	0.00E+00	0.00E+00	0.00E+00
Tritium					
No Nuclides Found	Curies	0.00E+00	0.00E+00	0.00E+00	0.00E+00
Gross Alpha					
No Nuclides Found	Curies	0.00E+00	0.00E+00	0.00E+00	0.00E+00

If Not Detected, Nuclide is Not Reported. Zeroes in this table indicates that no radioactivity was present at detectable levels.
See Table 2-6 for typical minimum detectable concentrations.

Table 2-2C

Hatch Nuclear Plant

RADIOACTIVE EFFLUENT RELEASE REPORT - 2010

Gaseous Effluents - Elevated Level Releases

Unit: Site

Starting: 1-Jan- 2010 Ending: 31-Dec-2010

		Continuous Mode			
Nuclides Released	**Unit**	**1ST Quarter**	**2ND Quarter**	**3RD Quarter**	**4TH Quarter**
Fission Gases					
Ar-41	Curies	0.00E+00	5.62E-01	5.14E-01	0.00E+00
Kr-85M	Curies	1.30E+00	1.68E+00	1.28E+00	2.14E+00
Kr-87	Curies	2.72E+00	4.46E+00	5.70E+00	5.79E+00
Xe-133	Curies	4.60E+00	2.51E+00	1.22E+00	0.00E+00
Xe-135M	Curies	1.44E+00	7.04E+00	5.35E+00	8.39E+00
Xe-135	Curies	6.37E+00	3.88E+00	5.57E+00	5.34E+00
Xe-138	Curies	5.07E+00	8.27E+00	2.36E+01	2.77E+01
Total For Period	**Curies**	**2.15E+01**	**2.84E+01**	**4.32E+01**	**4.94E+01**
Iodines					
I-131	Curies	3.84E-04	4.19E-04	3.08E-04	2.31E-04
I-133	Curies	6.15E-04	2.70E-04	4.67E-04	3.25E-04
Total For Period	**Curies**	**9.99E-04**	**6.89E-04**	**7.75E-04**	**5.56E-04**

If Not Detected, Nuclide is Not Reported. Zeroes in this table indicates that no radioactivity was present at detectable levels.
See Table 2-6 for typical minimum detectable concentrations.

Table 2-2C

Hatch Nuclear Plant

RADIOACTIVE EFFLUENT RELEASE REPORT - 2010

Gaseous Effluents - Elevated Level Releases

Unit: Site

Starting: 1-Jan- 2010 Ending: 31-Dec-2010

		Continuous Mode			
Nuclides Released	**Unit**	**1ST Quarter**	**2ND Quarter**	**3RD Quarter**	**4TH Quarter**
Particulates					
Mn-54	Curies	4.52E-07	0.00E+00	0.00E+00	0.00E+00
Co-58	Curies	0.00E+00	0.00E+00	0.00E+00	5.02E-08
Co-60	Curies	1.88E-07	0.00E+00	0.00E+00	1.22E-07
Sr-89	Curies	3.67E-05	5.54E-05	8.27E-05	5.29E-05
Sr-90	Curies	3.29E-08	9.55E-08	9.41E-09	4.34E-07
Cs-137	Curies	1.09E-07	2.62E-07	7.87E-07	4.04E-07
Ba-140	Curies	1.45E-05	3.00E-05	5.11E-05	3.55E-05
I-131P	Curies	1.62E-07	5.27E-08	0.00E+00	5.18E-08
Total For Period	**Curies**	**5.21E-05**	**8.58E-05**	**1.35E-04**	**8.95E-05**
Tritium					
H-3	Curies	1.69E+00	1.32E+00	2.24E+00	2.38E+00
Gross Alpha					
No Nuclides Found	Curies	0.00E+00	0.00E+00	0.00E+00	0.00E+00

If Not Detected, Nuclide is Not Reported. Zeroes in this table indicates that no radioactivity was present at detectable levels.
See Table 2-6 for typical minimum detectable concentrations.

Table 2-2C

Hatch Nuclear Plant

RADIOACTIVE EFFLUENT RELEASE REPORT - 2010

Gaseous Effluents - Elevated Level Releases

Unit: Site

Starting: 1-Jan- 2010 Ending: 31-Dec-2010

		Batch Mode			
Nuclides Released	Unit	1ST Quarter	2ND Quarter	3RD Quarter	4TH Quarter
Fission Gases					
No Nuclides Found	Curies	0.00E+00	0.00E+00	0.00E+00	0.00E+00
Iodines					
No Nuclides Found	Curies	0.00E+00	0.00E+00	0.00E+00	0.00E+00
Particulates					
No Nuclides Found	Curies	0.00E+00	0.00E+00	0.00E+00	0.00E+00
Tritium					
No Nuclides Found	Curies	0.00E+00	0.00E+00	0.00E+00	0.00E+00
Gross Alpha					
No Nuclides Found	Curies	0.00E+00	0.00E+00	0.00E+00	0.00E+00

If Not Detected, Nuclide is Not Reported. Zeroes in this table indicates that no radioactivity was present at detectable levels.
See Table 2-6 for typical minimum detectable concentrations.

Table 2-3A

Hatch Nuclear Plant

RADIOACTIVE EFFLUENT RELEASE REPORT - 2010

Gaseous Effluents - Ground Level Releases

Unit: 1

Starting: 1-Jan-2010 Ending: 31-Dec-2010

		Continuous Mode			
Nuclides Released	**Unit**	**1ST Quarter**	**2ND Quarter**	**3RD Quarter**	**4TH Quarter**
Fission Gases					
No Nuclides Found	Curies	0.00E+00	0.00E+00	0.00E+00	0.00E+00
Iodines					
I-131	Curies	1.25E-05	1.55E-05	4.84E-05	2.20E-05
I-133	Curies	0.00E+00	1.87E-05	1.01E-04	2.08E-05
Total For Period	**Curies**	**1.25E-05**	**3.42E-05**	**1.49E-04**	**4.28E-05**
Particulates					
Mn-54	Curies	2.76E-06	2.14E-06	0.00E+00	0.00E+00
Co-60	Curies	0.00E+00	1.95E-06	0.00E+00	0.00E+00
Sr-89	Curies	3.27E-06	3.34E-06	4.87E-06	3.87E-06
Sr-90	Curies	0.00E+00	0.00E+00	0.00E+00	1.52E-10
Total For Period	**Curies**	**6.03E-06**	**7.42E-06**	**4.87E-06**	**3.87E-06**
Tritium					
H-3	Curies	1.75E+02	4.31E+00	4.40E+00	3.13E+00
Gross Alpha					
No Nuclides Found	Curies	0.00E+00	0.00E+00	0.00E+00	0.00E+00

If Not Detected, Nuclide is Not Reported. Zeroes in this table indicates that no radioactivity was present at detectable levels.
See Table 2-6 for typical minimum detectable concentrations.

Table 2-3A

Hatch Nuclear Plant

RADIOACTIVE EFFLUENT RELEASE REPORT - 2010

Gaseous Effluents - Ground Level Releases

Unit: 1

Starting: 1-Jan-2010 Ending: 31-Dec-2010

		Batch Mode			
Nuclides Released	**Unit**	**1ST Quarter**	**2ND Quarter**	**3RD Quarter**	**4TH Quarter**
Fission Gases					
No Nuclides Found	Curies	0.00E+00	0.00E+00	0.00E+00	0.00E+00
Iodines					
No Nuclides Found	Curies	0.00E+00	0.00E+00	0.00E+00	0.00E+00
Particulates					
No Nuclides Found	Curies	0.00E+00	0.00E+00	0.00E+00	0.00E+00
Tritium					
No Nuclides Found	Curies	0.00E+00	0.00E+00	0.00E+00	0.00E+00
Gross Alpha					
No Nuclides Found	Curies	0.00E+00	0.00E+00	0.00E+00	0.00E+00

If Not Detected, Nuclide is Not Reported. Zeroes in this table indicates that no radioactivity was present at detectable levels.
See Table 2-6 for typical minimum detectable concentrations.

Table 2-3B

Hatch Nuclear Plant

RADIOACTIVE EFFLUENT RELEASE REPORT - 2010

Gaseous Effluents - Ground Level Releases

Unit: 2

Starting: 1-Jan-2010 Ending: 31-Dec-2010

		Continuous Mode			
Nuclides Released	**Unit**	**1ST Quarter**	**2ND Quarter**	**3RD Quarter**	**4TH Quarter**
Fission Gases					
No Nuclides Found	Curies	0.00E+00	0.00E+00	0.00E+00	0.00E+00
Iodines					
I-131	Curies	3.84E-05	4.70E-05	7.28E-05	7.75E-05
I-133	Curies	3.73E-05	6.11E-05	1.84E-04	1.97E-04
Total For Period	**Curies**	**7.56E-05**	**1.08E-04**	**2.57E-04**	**2.75E-04**
Particulates					
Mn-54	Curies	2.55E-07	0.00E+00	0.00E+00	0.00E+00
Sr-89	Curies	9.70E-06	9.60E-06	1.46E-05	1.20E-05
Sr-90	Curies	0.00E+00	0.00E+00	2.92E-07	0.00E+00
I-131P	Curies	3.88E-07	0.00E+00	0.00E+00	2.76E-07
Total For Period	**Curies**	**1.03E-05**	**9.60E-06**	**1.49E-05**	**1.23E-05**
Tritium					
H-3	Curies	2.90E+00	3.77E+00	6.35E+00	7.52E+00
Gross Alpha					
No Nuclides Found	Curies	0.00E+00	0.00E+00	0.00E+00	0.00E+00

If Not Detected, Nuclide is Not Reported. Zeroes in this table indicates that no radioactivity was present at detectable levels.
See Table 2-6 for typical minimum detectable concentrations.

Table 2-3B

Hatch Nuclear Plant

RADIOACTIVE EFFLUENT RELEASE REPORT - 2010

Gaseous Effluents - Ground Level Releases

Unit: 2

Starting: 1-Jan-2010 Ending: 31-Dec-2010

		Batch Mode			
Nuclides Released	**Unit**	**1ST Quarter**	**2ND Quarter**	**3RD Quarter**	**4TH Quarter**
Fission Gases					
No Nuclides Found	Curies	0.00E+00	0.00E+00	0.00E+00	0.00E+00
Iodines					
No Nuclides Found	Curies	0.00E+00	0.00E+00	0.00E+00	0.00E+00
Particulates					
No Nuclides Found	Curies	0.00E+00	0.00E+00	0.00E+00	0.00E+00
Tritium					
No Nuclides Found	Curies	0.00E+00	0.00E+00	0.00E+00	0.00E+00
Gross Alpha					
No Nuclides Found	Curies	0.00E+00	0.00E+00	0.00E+00	0.00E+00

If Not Detected, Nuclide is Not Reported. Zeroes in this table indicates that no radioactivity was present at detectable levels.
See Table 2-6 for typical minimum detectable concentrations.

Table 2-3C

Hatch Nuclear Plant

RADIOACTIVE EFFLUENT RELEASE REPORT - 2010

Gaseous Effluents - Ground Level Releases

Unit: Site

Starting: 1-Jan-2010 Ending: 31-Dec-2010

		Continuous Mode			
Nuclides Released	**Unit**	**1ST Quarter**	**2ND Quarter**	**3RD Quarter**	**4TH Quarter**
Fission Gases					
No Nuclides Found	Curies	0.00E+00	0.00E+00	0.00E+00	0.00E+00
Iodines					
I-131	Curies	5.08E-05	6.25E-05	1.21E-04	9.95E-05
I-133	Curies	3.73E-05	7.98E-05	2.85E-04	2.18E-04
Total For Period	**Curies**	**8.81E-05**	**1.42E-04**	**4.06E-04**	**3.18E-04**
Particulates					
Mn-54	Curies	3.01E-06	2.14E-06	0.00E+00	0.00E+00
Co-60	Curies	0.00E+00	1.95E-06	0.00E+00	0.00E+00
Sr-89	Curies	1.30E-05	1.29E-05	1.95E-05	1.59E-05
Sr-90	Curies	0.00E+00	0.00E+00	2.92E-07	1.52E-10
I-131P	Curies	3.88E-07	0.00E+00	0.00E+00	2.76E-07
Total For Period	**Curies**	**1.64E-05**	**1.70E-05**	**1.97E-05**	**1.61E-05**
Tritium					
H-3	Curies	1.78E+02	8.08E+00	1.08E+01	1.07E+01
Gross Alpha					
No Nuclides Found	Curies	0.00E+00	0.00E+00	0.00E+00	0.00E+00

If Not Detected, Nuclide is Not Reported. Zeroes in this table indicates that no radioactivity was present at detectable levels.
See Table 2-6 for typical minimum detectable concentrations.

Table 2-3C

Hatch Nuclear Plant

RADIOACTIVE EFFLUENT RELEASE REPORT - 2010

Gaseous Effluents - Ground Level Releases

Unit: Site

Starting: 1-Jan-2010 Ending: 31-Dec-2010

Nuclides Released	Unit	Batch Mode			
		1ST Quarter	2ND Quarter	3RD Quarter	4TH Quarter
Fission Gases					
No Nuclides Found	Curies	0.00E+00	0.00E+00	0.00E+00	0.00E+00
Iodines					
No Nuclides Found	Curies	0.00E+00	0.00E+00	0.00E+00	0.00E+00
Particulates					
No Nuclides Found	Curies	0.00E+00	0.00E+00	0.00E+00	0.00E+00
Tritium					
No Nuclides Found	Curies	0.00E+00	0.00E+00	0.00E+00	0.00E+00
Gross Alpha					
No Nuclides Found	Curies	0.00E+00	0.00E+00	0.00E+00	0.00E+00

If Not Detected, Nuclide is Not Reported. Zeroes in this table indicates that no radioactivity was present at detectable levels.
See Table 2-6 for typical minimum detectable concentrations.

Table 2-4A

Hatch Nuclear Plant

RADIOACTIVE EFFLUENT RELEASE REPORT - 2010

Air Doses Due to Gaseous Releases

Unit: 1

Starting: 1-Jan-2010 Ending: 31-Dec-2010

Cumulative Doses Per Quarter

Type of Radiation	ODCM Lmt	Units	1ST Qtr	% ODCM	2ND Qtr	% ODCM	3RD Qtr	% ODCM	4TH Qtr	% ODCM
Gamma Air	5.00E+00	mRad	6.87E-05	1.37E-03	1.64E-04	3.29E-03	3.25E-04	6.50E-03	3.75E-04	7.49E-03
Beta Air	1.00E+01	mRad	5.05E-05	5.05E-04	1.12E-04	1.12E-03	2.01E-04	2.01E-03	2.22E-04	2.22E-03

Cumulative Doses Per Year

Type of Radiation	ODCM Lmt	Units	Year to End Date	% ODCM	Receptor	Limit
Gamma Air	1.00E+01	mRad	9.32E-04	9.32E-03	SITE BOUNDARY / Child	Ann Cum Gamma Airdose
Beta Air	2.00E+01	mRad	5.85E-04	2.93E-03	MAX IND. AIRBORNE / Child	Ann Cum Beta Airdose

Table 2-4B

Hatch Nuclear Plant

RADIOACTIVE EFFLUENT RELEASE REPORT - 2010

Air Doses Due to Gaseous Releases

Unit: 2

Starting: 1-Jan-2010 Ending: 31-Dec-2010

Cumulative Doses Per Quarter

Type of Radiation	ODCM Lmt	Units	1ST Qtr	% ODCM	2ND Qtr	% ODCM	3RD Qtr	% ODCM	4TH Qtr	% ODCM
Gamma Air	5.00E+00	mRad	1.21E-04	2.41E-03	1.64E-04	3.29E-03	3.25E-04	6.50E-03	3.75E-04	7.49E-03
Beta Air	1.00E+01	mRad	1.07E-04	1.07E-03	1.12E-04	1.12E-03	2.01E-04	2.01E-03	2.22E-04	2.22E-03

Cumulative Doses Per Year

Type of Radiation	ODCM Lmt	Units	Year to End Date	% ODCM	Receptor	Limit
Gamma Air	1.00E+01	mRad	9.84E-04	9.84E-03	SITE BOUNDARY / Child	Ann Cum Gamma Airdose
Beta Air	2.00E+01	mRad	6.42E-04	3.21E-03	MAX IND. AIRBORNE / Child	Ann Cum Beta Airdose

Table 2-5A

Hatch Nuclear Plant

RADIOACTIVE EFFLUENT RELEASE REPORT - 2010

Doses To A Member Of The Public Due To Radioiodines, Tritium, and Particulates in Gaseous Releases

Unit: 1

Starting: 1-Jan-2010 Ending: 31-Dec-2010

Cumulative Doses Per Quarter

Organ	ODCM Lmt	Units	1ST Qtr	% ODCM	2ND Qtr	% ODCM	3RD Qtr	% ODCM	4TH Qtr	% ODCM
Bone	7.50E+00	mRem	5.42E-05	7.23E-04	1.01E-04	1.35E-03	1.19E-04	1.58E-03	9.48E-05	1.26E-03
GI-Lli	7.50E+00	mRem	9.09E-02	1.21E+00	2.26E-03	3.01E-02	2.29E-03	3.06E-02	1.64E-03	2.18E-02
Kidney	7.50E+00	mRem	9.09E-02	1.21E+00	2.26E-03	3.01E-02	2.30E-03	3.06E-02	1.64E-03	2.18E-02
Liver	7.50E+00	mRem	9.09E-02	1.21E+00	2.26E-03	3.01E-02	2.29E-03	3.06E-02	1.64E-03	2.18E-02
Lung	7.50E+00	mRem	9.08E-02	1.21E+00	2.25E-03	3.01E-02	2.29E-03	3.05E-02	1.64E-03	2.18E-02
Thyroid	7.50E+00	mRem	9.14E-02	1.22E+00	3.16E-03	4.21E-02	3.40E-03	4.54E-02	2.22E-03	2.97E-02
Total Body	7.50E+00	mRem	9.09E-02	1.21E+00	2.26E-03	3.01E-02	2.29E-03	3.06E-02	1.64E-03	2.19E-02

Cumulative Doses per Year

Organ	ODCM Lmt	Units	Year to Ending Date	% ODCM	Receptor	Limit
Bone	1.500E+01	mRem	3.691E-04	2.461E-03	MAX IND. AIRBORNE / Child	Ann Cum Iod/Part Airdose
GI-Lli	1.500E+01	mRem	9.704E-02	6.469E-01	MAX IND. AIRBORNE / Child	Ann Cum Iod/Part Airdose
Kidney	1.500E+01	mRem	9.704E-02	6.469E-01	MAX IND. AIRBORNE / Child	Ann Cum Iod/Part Airdose
Liver	1.500E+01	mRem	9.704E-02	6.469E-01	MAX IND. AIRBORNE / Child	Ann Cum Iod/Part Airdose
Lung	1.500E+01	mRem	9.703E-02	6.469E-01	MAX IND. AIRBORNE / Child	Ann Cum Iod/Part Airdose
Thyroid	1.500E+01	mRem	1.002E-01	6.679E-01	MAX IND. AIRBORNE / Child	Ann Cum Iod/Part Airdose
Total Body	1.500E+01	mRem	9.704E-02	6.470E-01	MAX IND. AIRBORNE / Child	Ann Cum Iod/Part Airdose

Table 2-5B

Hatch Nuclear Plant

RADIOACTIVE EFFLUENT RELEASE REPORT - 2010

Doses To A Member Of The Public Due To Radioiodines, Tritium, and Particulates in Gaseous Releases

Unit: 2

Starting: 1-Jan-2010 Ending: 31-Dec-2010

Cumulative Doses Per Quarter

Organ	ODCM Lmt	Units	1ST Qtr	% ODCM	2ND Qtr	% ODCM	3RD Qtr	% ODCM	4TH Qtr	% ODCM
Bone	7.50E+00	mRem	1.43E-04	1.91E-03	1.41E-04	1.88E-03	3.23E-04	4.30E-03	1.80E-04	2.40E-03
GI-LI	7.50E+00	mRem	1.52E-03	2.02E-02	1.97E-03	2.62E-02	3.31E-03	4.42E-02	3.92E-03	5.22E-02
Kidney	7.50E+00	mRem	1.52E-03	2.02E-02	1.96E-03	2.62E-02	3.31E-03	4.41E-02	3.92E-03	5.22E-02
Liver	7.50E+00	mRem	1.51E-03	2.02E-02	1.96E-03	2.62E-02	3.31E-03	4.41E-02	3.91E-03	5.22E-02
Lung	7.50E+00	mRem	1.51E-03	2.02E-02	1.96E-03	2.62E-02	3.31E-03	4.41E-02	3.91E-03	5.21E-02
Thyroid	7.50E+00	mRem	2.58E-03	3.44E-02	2.92E-03	3.89E-02	4.83E-03	6.44E-02	5.43E-03	7.24E-02
Total Body	7.50E+00	mRem	1.52E-03	2.02E-02	1.97E-03	2.62E-02	3.34E-03	4.45E-02	3.92E-03	5.22E-02

Cumulative Doses per Year

Organ	ODCM Lmt	Units	Year to Ending Date	% ODCM	Receptor	Limit
Bone	1.500E+01	mRem	7.863E-04	5.242E-03	MAX IND. AIRBORNE / Child	Ann Cum Iod/Part Airdose
GI-LI	1.500E+01	mRem	1.071E-02	7.141E-02	MAX IND. AIRBORNE / Child	Ann Cum Iod/Part Airdose
Kidney	1.500E+01	mRem	1.071E-02	7.139E-02	MAX IND. AIRBORNE / Child	Ann Cum Iod/Part Airdose
Liver	1.500E+01	mRem	1.070E-02	7.132E-02	MAX IND. AIRBORNE / Child	Ann Cum Iod/Part Airdose
Lung	1.500E+01	mRem	1.069E-02	7.128E-02	MAX IND. AIRBORNE / Child	Ann Cum Iod/Part Airdose
Thyroid	1.500E+01	mRem	1.576E-02	1.051E-01	MAX IND. AIRBORNE / Child	Ann Cum Iod/Part Airdose
Total Body	1.500E+01	mRem	1.074E-02	7.159E-02	MAX IND. AIRBORNE / Child	Ann Cum Iod/Part Airdose

TABLE 2-6
E. I. HATCH NUCLEAR PLANT
RADIOACTIVE EFFLUENT RELEASE REPORT - 2010
MINIMUM DETECTABLE CONCENTRATIONS - GASEOUS SAMPLE ANALYSES
STARTING: 1-Jan-2010 ENDING: 31-Dec-2010

The values in this table represent a priori Minimum Detectable Concentration (MDC) that are typically achieved in laboratory analyses of gaseous radwaste samples.

RADIONUCLIDE	***MDC***	***UNITS***
Kr-87	2.94E-08	uCi/cc
Kr-88	3.22E-08	uCi/cc
Xe-133	2.30E-08	uCi/cc
Xe-133m	7.30E-08	uCi/cc
Xe-135	8.73E-09	uCi/cc
Xe-138	1.99E-07	uCi/cc
I-131	1.34E-13*	uCi/cc
I-133	1.53E-13*	uCi/cc
Mn-54	1.62E-13*	uCi/cc
Fe-59	3.42E-13*	uCi/cc
Co-58	1.30E-13*	uCi/cc
Co-60	1.54E-13*	uCi/cc
Zn-65	2.54E-13*	uCi/cc
Mo-99	9.61E-13*	uCi/cc
Cs-134	1.42E-13*	uCi/cc
Cs-137	1.28E-13*	uCi/cc
Ce-141	1.26E-13*	uCi/cc
Ce-144	5.64E-13*	uCi/cc
Sr-89	1.10E-16	uCi/cc
Sr-90	6.70E-16	uCi/cc
H-3	4.00E-07	uCi/cc

** Based on an estimated sample quantity of 4.078E+07 cc's.*

Table 2-7A

Hatch Nuclear Plant

RADIOACTIVE EFFLUENT RELEASE REPORT - 2010

Gaseous Effluents - Batch Release Summary

Unit: 1

Starting: 1-Jan-2010 Ending: 31-Dec-2010

Gaseous Releases	Units	1ST Quarter	2ND Quarter	3RD Quarter	4TH Quarter	Year Totals
1. Number of batch releases		0	0	0	0	0
2. Total time period for batch releases	(Minutes)	0.00E+00	0.00E+00	0.00E+00	0.00E+00	0.00E+00
3. Maximum time period for a batch release	(Minutes)	0.00E+00	0.00E+00	0.00E+00	0.00E+00	0.00E+00
4. Average time period for a batch release	(Minutes)	0.00E+00	0.00E+00	0.00E+00	0.00E+00	0.00E+00
5. Minimum time period for a batch release	(Minutes)	0.00E+00	0.00E+00	0.00E+00	0.00E+00	0.00E+00

Table 2-7B

Hatch Nuclear Plant

RADIOACTIVE EFFLUENT RELEASE REPORT - 2010

Gaseous Effluents - Batch Release Summary

Unit: 2

Starting: 1-Jan-2010 Ending: 31-Dec-2010

Gaseous Releases	Units	1ST Quarter	2ND Quarter	3RD Quarter	4TH Quarter	Year Totals
1. Number of batch releases		0	0	0	0	0
2. Total time period for batch releases	(Minutes)	0.00E+00	0.00E+00	0.00E+00	0.00E+00	0.00E+00
3. Maximum time period for a batch release	(Minutes)	0.00E+00	0.00E+00	0.00E+00	0.00E+00	0.00E+00
4. Average time period for a batch release	(Minutes)	0.00E+00	0.00E+00	0.00E+00	0.00E+00	0.00E+00
5. Minimum time period for a batch release	(Minutes)	0.00E+00	0.00E+00	0.00E+00	0.00E+00	0.00E+00

Table 2-8A

Hatch Nuclear Plant

RADIOACTIVE EFFLUENT RELEASE REPORT - 2010

Gaseous Effluents - Abnormal Release Summary

Unit: 1

Starting: 1-Jan-2010 Ending: 31-Dec-2010

Gaseous Releases	Units	1ST Quarter	2ND Quarter	3RD Quarter	4TH Quarter	Year Totals
1. Number of Releases		0	0	0	0	0
2. Total Time For All Releases	(Minutes)	0.00E+00	0.00E+00	0.00E+00	0.00E+00	0.00E+00
3. Maximum Time For A Release	(Minutes)	0.00E+00	0.00E+00	0.00E+00	0.00E+00	0.00E+00
4. Average Time For A Release	(Minutes)	0.00E+00	0.00E+00	0.00E+00	0.00E+00	0.00E+00
5. Minimum Time For A Release	(Minutes)	0.00E+00	0.00E+00	0.00E+00	0.00E+00	0.00E+00
6. Total activity for all releases	(Curies)	0.00E+00	0.00E+00	0.00E+00	0.00E+00	0.00E+00

Table 2-8B

Hatch Nuclear Plant

RADIOACTIVE EFFLUENT RELEASE REPORT - 2010

Gaseous Effluents - Abnormal Release Summary

Unit: 2

Starting: 1-Jan-2010 Ending: 31-Dec-2010

Gaseous Releases	Units	1ST Quarter	2ND Quarter	3RD Quarter	4TH Quarter	Year Totals
1. Number of Releases		0	0	0	0	0
2. Total Time For All Releases	(Minutes)	0.00E+00	0.00E+00	0.00E+00	0.00E+00	0.00E+00
3. Maximum Time For A Release	(Minutes)	0.00E+00	0.00E+00	0.00E+00	0.00E+00	0.00E+00
4. Average Time For A Release	(Minutes)	0.00E+00	0.00E+00	0.00E+00	0.00E+00	0.00E+00
5. Minimum Time For A Release	(Minutes)	0.00E+00	0.00E+00	0.00E+00	0.00E+00	0.00E+00
6. Total activity for all releases	(Curies)	0.00E+00	0.00E+00	0.00E+00	0.00E+00	0.00E+00

Table 2-8C

Hatch Nuclear Plant

RADIOACTIVE EFFLUENT RELEASE REPORT - 2010

Gaseous Effluents - Abnormal Release Summary

Unit: Site

Starting: 1-Jan-2010 Ending: 31-Dec-2010

Gaseous Releases	Units	1ST Quarter	2ND Quarter	3RD Quarter	4TH Quarter	Year Totals
1. Number of Releases		0	0	0	0	0
2. Total Time For All Releases	(Minutes)	0.00E+00	0.00E+00	0.00E+00	0.00E+00	0.00E+00
3. Maximum Time For A Release	(Minutes)	0.00E+00	0.00E+00	0.00E+00	0.00E+00	0.00E+00
4. Average Time For A Release	(Minutes)	0.00E+00	0.00E+00	0.00E+00	0.00E+00	0.00E+00
5. Minimum Time For A Release	(Minutes)	0.00E+00	0.00E+00	0.00E+00	0.00E+00	0.00E+00
6. Total activity for all releases	(Curies)	0.00E+00	0.00E+00	0.00E+00	0.00E+00	0.00E+00

3.0 Solid Waste

3.1 Regulatory Requirements

The Process Control Program (PCP) and the ODCM requirements presented in this section are for Unit 1 and Unit 2 and are stated in part.

3.1.1 Solid Radioactive Waste System

PCP Section A.3.1 Solid Radioactive Waste System control states:

The solid radwaste system shall be used in accordance with the PROCESS CONTROL PROGRAM to provide for the SOLIDIFICATION of wet solid wastes and for the SOLIDIFICATION and packaging of other radioactive wastes, as required, to ensure that they meet requirements of 10 CFR Parts 20 and 71, prior to shipment of radioactive wastes from the site.

3.1.2 Reporting Requirements

Technical Specification 5.6.3 requires in part:

The Radioactive Effluent Release Report covering the operation of the unit shall be submitted in accordance with 10 CFR 50.36a. The report shall include a summary of the quantities of radioactive liquid and gaseous effluents and solid waste released from the unit. The material provided shall be consistent with the objectives outlined in the ODCM and the Process Control Program and in conformance with 10 CFR 50.36a and 10 CFR 50, Appendix I, Section IV.B.1.

PCP Section A.4.1 states in part:

The Radioactive Effluent Release Report, submitted in accordance with Technical Specification 5.6.3, shall include a summary of the quantities of solid radwaste released from the units as outlined in Regulatory Guide 1.21, "Measuring, Evaluating, and Reporting Radioactivity in Solid Wastes and Releases of Radioactive Materials in Liquid and Gaseous Effluents from Light-Water-Cooled Nuclear Power Plants," Revision 1, June 1974, with data summarized on a 6 month basis following the format of Appendix B thereof.

For each type of solid radwaste shipped offsite during the report period, the report shall include the following information:

a. Container volume.

b. Total curie quantity (specify whether determined by measurement or estimate).

c. Principal radionuclides (specify whether determined by measurement or estimate).

d. Type of waste (such as spent resin, compacted dry waste, evaporator bottoms).

e. Type of container (such as LSA, type A, type B, large quantity).

f. Solidification agent (such as cement).

Major changes to the solid radioactive waste treatment system shall be reported to the Nuclear Regulatory Commission in the Radioactive Effluent Release Report for the period in which the evaluation was reviewed and accepted by the PRB.

3.2 Solid Waste Data

Regulatory Guide 1.21, Table 3 is found in this report as Table 3-1.

TABLE 3-1
E. I. HATCH NUCLEAR PLANT
RADIOACTIVE EFFLUENT RELEASE REPORT - 2010
SOLID WASTE AND IRRADIATED FUEL SHIPMENTS
UNIT 1 AND 2

STARTING: 1-Jan-2010 ***ENDING: 30-Jun-2010***

A. SOLID WASTE SHIPPED OFFSITE FOR BURIAL OR DISPOSAL (Not irradiated fuel)

1. Type of waste	UNIT	6 month period	Est. Total ERROR %
a. Spent resins, filter sludges, evaporator	m^3	3.65 E+01	
bottoms, etc.	Ci	7.35 E+01	1.00 E 01
b. Dry compressible waste, contaminated equip.	m^3	1.02 E+03	
etc.	Ci	5.72 E+01	2.00 E 01
c. Irradiated components, control rods,	m^3		
	Ci		
d. Control Rod Drive Filters	m^3		
	Ci		
e. Other (describe)	m^3		
Equip. etc.	Ci		

2. Estimate of major nuclide composition (by type of waste)

ISOTOPE	PERCENT	CURIES
a.Fe-55	36.9	2.71E+01
Co-60	28.7	2.11E+01
Zn-65	4.9	3.57E+00
Mn-54	11.3	8.32E+00
Cr-51	0.3	2.28 E-01
Other	18.0	1.32E+01
b.Fe-55	62.8	3.59E+01
Co-60	15.6	8.92E+00
Mn-54	4.59	2.63E+00
Zn-65	2.13	1.22E+00
Other	14.9	8.53E+00
c.		
d.		
e.		

3. Solid Waste Disposition

Number of Shipments	Mode of Transportation	Destination
All waste sent to processors	N/A	N/A

B. IRRADIATED FUEL SHIPMENTS (Disposition)

Number of Shipments	Mode of Transportation	Destination
0	N/A	N/A

TABLE 3-1
E. I. HATCH NUCLEAR PLANT
RADIOACTIVE EFFLUENT RELEASE REPORT - 2010
SOLID WASTE AND IRRADIATED FUEL SHIPMENTS
UNIT 1 AND 2

STARTING: 1-Jul-2010 ***ENDING: 31-Dec-2010***

A. SOLID WASTE SHIPPED OFFSITE FOR BURIAL OR DISPOSAL (Not irradiated fuel)

1. Type of waste	UNIT	6 month period	Est. Total ERROR %
a. Spent resins, filter sludges, evaporator	m^3	4.71 E+01	
bottoms, etc.	Ci	6.81 E+01	1.00 E 01
b. Dry compressible waste, contaminated equip.	m^3	3.28 E+02	
etc.	Ci	1.33 E-01	2.00 E 01
c. Irradiated components, control rods,	m^3		
	Ci		
d. Control Rod Drive Filters	m^3		
	Ci		
e. Other (describe)	m^3		
Equip. etc.	Ci		

2. Estimate of major nuclide composition (by type of waste)

ISOTOPE	PERCENT	CURIES
a.Fe-55	33.3	2.27 E+01
Co-60	32.8	2.23 E+01
Zn-65	5.1	3.50 E+00
Mn-54	13.3	9.09 E+00
Cr-51	1.2	8.47 E-01
Other	14.2	9.66 E+00
b.Fe-55	62.8	2.06 E-02
Co-60	15.6	6.08 E-03
Mn-54	4.59	2.82 E-03
Zn-65	2.13	2.82 E-03
Other	14.9	2.00 E-02
c.		
d.		
e.		

3. Solid Waste Disposition

Number of Shipments	Mode of Transportation	Destination
All waste sent to processors	N/A	N/A

B. IRRADIATED FUEL SHIPMENTS (Disposition)

Number of Shipments	Mode of Transportation	Destination
0	N/A	N/A

TABLE 3-1
E. I. HATCH NUCLEAR PLANT
RADIOACTIVE EFFLUENT RELEASE REPORT - 2010
SOLID WASTE AND IRRADIATED FUEL SHIPMENTS
UNIT 1 AND 2
STARTING: 1-Jan-2010 ENDING: 30-Jun-2010

TYPE OF WASTE	CURIE QUANTITY/ DETERMINED	PRINCIPAL NUCLIDES/ DETERMINATION	BURIAL CONTAINER DESCRIPTION	NUMBER OF CONTAINERS SHIPPED	VOLUME OF EACH CONTAINER CUBIC FEET (FT 3)	TYPE SHIPMENT/ CONTAINER	SOLIDIFICATION AGENT
Dewatered Resins	73.5	Zn-65,Fe-55,Co-60 Mn-54	Carbon Steel Liners	7 * See Note	195 (External)	14-210 Cask	N/A
Dry Active Waste	57.2	Fe-55,Co-60,Mn-54 Zn-65	B-25/High Integrity Liner	400 * See Note	90	B-25 Boxes, Sea land Containers 14-210 **STC Shipping Cask	N/A

* **Note: The actual type, size and number of the containers may vary from the recorded values due to the use of different containers by waste processors for final disposal of processed resin and DAW.**

** **STC-Strong Tight Container**

TABLE 3-1
E. I. HATCH NUCLEAR PLANT
RADIOACTIVE EFFLUENT RELEASE REPORT - 2010
SOLID WASTE AND IRRADIATED FUEL SHIPMENTS
UNIT 1 AND 2
STARTING: 1-JUL-2010 ENDING:31-DEC-2010

TYPE OF WASTE	CURIE QUANTITY/ DETERMINED	PRINCIPAL NUCLIDES/ DETERMINATION	BURIAL CONTAINER DESCRIPTION	NUMBER OF CONTAINERS SHIPPED	VOLUME OF EACH CONTAINER CUBIC FEET (FT 3)	TYPE SHIPMENT/ CONTAINER	SOLIDIFICATION AGENT
Dewatered Resins	68.1	Zn-65,Fe-55,Co-60 Mn-54	Carbon Steel Liners	9 * See Note	195 (External)	14-210 CASK/	N/A
Dry Active Waste	1.33E-01	Fe-55,C0-60,Mn-54 Zn-65	B-25/High Integrity Liner	121 * See Note	90	B25 Boxes, Sea land Containers 14-210 STC Shipping Cask	N/A

* **Note: The actual type, size and number of the containers may vary from the recorded values due to the use of different sized containers to ship wastes to processor.**

4.0 Doses to Members of the Public Inside the Site Boundary

4.1 Regulatory Requirements

ODCM 7.2.2.3 states in part that the Radioactive Effluent Release Report shall also include an assessment of the radiation doses from radioactive liquid and gaseous effluents to MEMBERS OF THE PUBLIC due to their activities inside the SITE BOUNDARY during the report period; this assessment must be performed in accordance with the ODCM.

4.2 Demonstration of Compliance

The locations of concern within the site boundary are the Roadside Park, the Camping Area, the Recreation Area, and the Visitors Center. Listed in Table 4-1 are: The distance and direction from a point midway between the center of Unit 1 and the Unit 2 reactors, the dispersion and deposition factors for any releases from the Main Stack (elevated) and from the reactor building (ground level); and the estimated maximum occupancy factor for an individual and the assumed age group of this individual.

The source term is not listed in Table 4-1 . The source term is listed in Tables 2-2A and 2-2B, for the elevated releases. Similarly the source term is listed in Tables 2-3A and 2-3B for the ground level releases.

The maximum doses in units of mrem accumulated by an individual MEMBER OF THE PUBLIC due to their activities inside the site boundary during the reporting period are presented in Table 4-1.

Table 4-1

Hatch Nuclear Plant

RADIOACTIVE EFFLUENT RELEASE REPORT - 2010

Doses to a Member of the Public Due to Activities Inside the Site Boundary

Unit: Site

Starting: 1-Jan-2010 Ending: 31-Dec-2010

Location Name: ROADSIDE PARK
Distance (kilometers): 1.18E+00
Sector: WNW
Occupancy Factor: 2.28E-04
Age Group: Child

Elevated Release	Noble Gas	X/Q (sec/m3): 2.42E-08	
Elevated Release	Particulate and Radioiodine	X/Q (sec/m3): 2.37E-08	D/Q (m-2): 1.29E-09
Ground Level Release	Noble Gas	X/Q (sec/m3): 7.83E-06	
Ground Level Release	Particulate and Radioiodine	X/Q (sec/m3): 7.00E-06	D/Q (m-2): 2.01E-08

	Units	1ST Quarter	2ND Quarter	3RD Quarter	4TH Quarter	Year
Bone	mRem	1.44E-11	7.42E-11	3.18E-11	1.37E-11	1.34E-10
Liver	mRem	1.02E-07	4.68E-09	6.15E-09	6.09E-09	1.19E-07
Total Body	mRem	1.02E-07	4.68E-09	6.14E-09	6.09E-09	1.19E-07
Thyroid	mRem	1.02E-07	5.36E-09	7.70E-09	7.34E-09	1.23E-07
Kidney	mRem	1.02E-07	4.68E-09	6.15E-09	6.09E-09	1.19E-07
Lung	mRem	1.02E-07	4.70E-09	6.16E-09	6.10E-09	1.19E-07
GI-LI	mRem	1.02E-07	4.68E-09	6.14E-09	6.09E-09	1.19E-07
Skin	mRem	1.04E-11	8.01E-11	6.64E-12	5.33E-12	1.02E-10

Table 4-1

Hatch Nuclear Plant

RADIOACTIVE EFFLUENT RELEASE REPORT - 2010

Doses to a Member of the Public Due to Activities Inside the Site Boundary

Unit: Site

Starting: 1-Jan-2010 Ending: 31-Dec-2010

Location Name: CAMPING AREA
Distance (kilometers): 1.27E+00
Sector: WNW
Occupancy Factor: 5.48E-03
Age Group: Child

Elevated Release	Noble Gas	X/Q (sec/m3): 2.38E-08	
Elevated Release	Particulate and Radioiodine	X/Q (sec/m3): 2.33E-08	D/Q (m-2): 2.01E-08
Ground Level Release	Noble Gas	X/Q (sec/m3): 7.03E-06	
Ground Level Release	Particulate and Radioiodine	X/Q (sec/m3): 6.27E-06	D/Q (m-2): 1.80E-08

	Units	1ST Quarter	2ND Quarter	3RD Quarter	4TH Quarter	Year
Bone	mRem	7.77E-10	1.97E-09	1.20E-09	7.00E-10	4.64E-09
Liver	mRem	2.19E-06	1.01E-07	1.33E-07	1.31E-07	2.56E-06
Total Body	mRem	2.19E-06	1.01E-07	1.33E-07	1.31E-07	2.56E-06
Thyroid	mRem	2.20E-06	1.16E-07	1.66E-07	1.58E-07	2.64E-06
Kidney	mRem	2.19E-06	1.01E-07	1.33E-07	1.32E-07	2.56E-06
Lung	mRem	2.19E-06	1.02E-07	1.33E-07	1.32E-07	2.56E-06
GI-LI	mRem	2.19E-06	1.01E-07	1.33E-07	1.31E-07	2.56E-06
Skin	mRem	7.84E-10	2.16E-09	7.51E-10	5.95E-10	4.29E-09

Table 4-1

Hatch Nuclear Plant

RADIOACTIVE EFFLUENT RELEASE REPORT - 2010

Doses to a Member of the Public Due to Activities Inside the Site Boundary

Unit: Site

Starting: 1-Jan-2010 Ending: 31-Dec-2010

Location Name: RECREATION AREA
Distance (kilometers): 1.03E+00
Sector: SSE
Occupancy Factor: 2.37E-02
Age Group: Child

Elevated Release	Noble Gas	X/Q (sec/m3): 3.30E-08	
Elevated Release	Particulate and Radioiodine	X/Q (sec/m3): 3.21E-08	D/Q (m-2): 1.56E-09
Ground Level Release	Noble Gas	X/Q (sec/m3): 6.42E-06	
Ground Level Release	Particulate and Radioiodine	X/Q (sec/m3): 5.73E-06	D/Q (m-2): 2.36E-08

	Units	1ST Quarter	2ND Quarter	3RD Quarter	4TH Quarter	Year
Bone	mRem	1.56E-09	8.84E-09	2.93E-09	1.34E-09	1.47E-08
Liver	mRem	8.65E-06	4.01E-07	5.23E-07	5.18E-07	1.01E-05
Total Body	mRem	8.65E-06	4.01E-07	5.23E-07	5.18E-07	1.01E-05
Thyroid	mRem	8.70E-06	4.60E-07	6.57E-07	6.25E-07	1.04E-05
Kidney	mRem	8.65E-06	4.01E-07	5.24E-07	5.19E-07	1.01E-05
Lung	mRem	8.65E-06	4.03E-07	5.25E-07	5.20E-07	1.01E-05
GI-LI	mRem	8.65E-06	4.01E-07	5.23E-07	5.18E-07	1.01E-05
Skin	mRem	1.28E-09	9.78E-09	8.16E-10	6.55E-10	1.25E-08

Table 4-1

Hatch Nuclear Plant

RADIOACTIVE EFFLUENT RELEASE REPORT - 2010

Doses to a Member of the Public Due to Activities Inside the Site Boundary

Unit: Site

Starting: 1-Jan-2010 Ending: 31-Dec-2010

Location Name: VISITORS CENTER
Distance (kilometers): 6.94E-01
Sector: WSW
Occupancy Factor: 4.57E-04
Age Group: Child

Elevated Release	Noble Gas	X/Q (sec/m3): 5.00E-08	
Elevated Release	Particulate and Radioiodine	X/Q (sec/m3): 4.97E-08	D/Q (m-2): 2.26E-09
Ground Level Release	Noble Gas	X/Q (sec/m3): 1.87E-05	
Ground Level Release	Particulate and Radioiodine	X/Q (sec/m3): 1.72E-05	D/Q (m-2): 5.47E-08

	Units	1ST Quarter	2ND Quarter	3RD Quarter	4TH Quarter	Year
Bone	mRem	7.29E-11	4.00E-10	1.57E-10	6.73E-11	6.97E-10
Liver	mRem	5.01E-07	2.31E-08	3.03E-08	3.00E-08	5.84E-07
Total Body	mRem	5.01E-07	2.31E-08	3.03E-08	3.00E-08	5.84E-07
Thyroid	mRem	5.03E-07	2.64E-08	3.79E-08	3.61E-08	6.04E-07
Kidney	mRem	5.01E-07	2.31E-08	3.03E-08	3.00E-08	5.84E-07
Lung	mRem	5.01E-07	2.32E-08	3.04E-08	3.00E-08	5.84E-07
GI-LI	mRem	5.01E-07	2.31E-08	3.02E-08	3.00E-08	5.84E-07
Skin	mRem	5.37E-11	4.34E-10	3.28E-11	2.64E-11	5.47E-10

5.0 *Total Dose from Uranium Fuel Cycle (40 CFR 190)*

5.1 *Regulatory Requirements*

The annual (calendar year) dose or dose commitment to any MEMBER OF THE PUBLIC due to releases of radioactivity and to radiation from uranium fuel cycle sources shall be limited to less than or equal to 25 mrems to the whole body or to any organ, except the thyroid, which shall be limited to less than or equal to 75 mrems.

5.2 *Demonstration of Compliance*

No dose limits stated in ODCM Sections 2.1.3, 3.1.3, and 3.1.4 were exceeded. Therefore, compliance with 40 CFR 190 dose limits was demonstrated in accordance with the requirements of ODCM Section 5.1.3.

6.0 *Meteorological Data*

The Radioactive Effluent Release Report, to be submitted by May 1 of each year, shall include an annual summary of hourly meteorological data collected over the previous year. This annual summary may be either in the form of an hour-by-hour listing of wind speed, wind direction, atmospheric stability, and precipitation (if measured), on magnetic tape, or, in the form of joint frequency distributions of wind speed, wind direction and atmospheric stability.

In lieu of submission with the Radioactive Effluent Release Report, the licensee has retained this summary of required meteorological data on site in a file. It will be provided to the NRC upon request.

7.0 *Program Deviations*

7.1 *Inoperable Liquid or Gaseous Effluent Monitoring Instrumentation*

From 5/18/10 to 6/30/10 2G11N355 Yokogawa Discharge GPM and Totalizer Recorder was inop for greater than 30 days. CR 2010106507 was generated on 5/18/10 due to a failed surveillance. Work order 2100741101 performed repairs and satisfied the surveillance on 6/30/2010.

7.1.1 *Regulatory Requirements*

ODCM, Chapter 7, Section 7.2.2.6.2 states that the Radioactive Effluent Release Report shall include deviations from the liquid and gaseous effluent monitoring instrumentation operability requirements included in Sections 2.1.1 and 3.1.1, respectively.

7.1.2 Description of Deviations

There were no deviations from the liquid and gaseous effluent monitoring instrumentation operability requirements during this reporting period.

7.2 Tanks Exceeding Curie Content Limits

7.2.1 Regulatory Requirements

ODCM 7.2.2.6 states in part that the report shall include notifications if the contents within any outside temporary tank, for liquids, exceed the limit of Technical Specification 5.5.8.b.

7.2.2 Description of Deviations

There were no outside temporary tanks, for liquids, that exceeded the limit of Technical Specification 5.5.8.b during this reporting period.

7.3 Effluent Sample Analysis Exceeding Minimum Detectable Concentration (MDC)

7.3.1 Regulatory Requirements

ODCM 7.2.2.6 states in part that deviations from MDC(s) required in Table 3-3 shall be included in the Radioactive Effluent Release Report.

7.3.2 Description of Deviation

There were no deviations from MDC(s) required in Table 3-3 during this reporting period.

8.0 Changes to the Plant Hatch Offsite Dose Calculation Manual (ODCM)

There were no changes to the ODCM in 2010.

8.1 Regulatory Requirements

Pursuant to Technical Specification 5.5.1 and ODCM Section 7.2.2.5, licensee initiated changes shall be submitted to the NRC in the form of a complete, legible copy of the entire ODCM as part of or concurrent with the Radioactive Effluent Release Report for the period of the report in which any change in the ODCM was made. Each change shall be identified by markings in the margin of the affected pages, clearly indicating the area of the page that was changed, and shall indicate the date (i.e., month and year) the change was implemented.

8.2 Description of Changes

There were no changes in 2010.

9.0 Major Changes to Liquid, Gaseous, or Solid Radwaste Treatment Systems

9.1 Regulatory Requirements

The Radioactive Effluent Release Report shall include. . . . any major change to liquid, gaseous, or solid radwaste treatment systems pursuant to ODCM Chapter 7, Section 7.2.2.7.

9.2 Description of Major Changes

Gaseous Radwaste System

There were no major changes to the gaseous radwaste system during this reporting period.

Solid Radwaste System

There were no major changes to the solid radwaste system during this reporting period.

Liquid Radwaste System

There were no major changes to the Liquid Radwaste Treatment System during this reporting period.

SOUTHERN COMPANY

E. I. HATCH NUCLEAR PLANT

UNITS NO. 1 & 2

ANNUAL REPORT

JANUARY 1, 2010 - DECEMBER 31, 2010

APPENDIX A

Release of Radioactive RHR Service Water for 2010

The following historical information is provided to create a perspective for the release of radioactivity during the year 2010 relative to the RHR Service Water System.

In 1996, the analysis of samples from the Unit 1 RHR "B" Loop service water (RHRSW) system identified several radionuclides at very low concentrations. The first indication of contamination was noted on August 8,1996 and the second indication was noted on August 23, 1996. The total activity in the RHRSW contained within the heat exchanger, which has a volume of approximately 4000 gallons, was respectively estimated to be about 13.7 μCi and 25.6 μCi. On August 23,1996 repairs were made to a Δp instrument in an effort to stop the inleakage into the service water side of the heat exchanger. To determine if the leak had been repaired, the service water loop of the heat exchanger was decontaminated by flushing and the service water in the loop was then resampled and analyzed. The circulating water flume has a blowdown line, which diverts a small portion of the total circulating water to the river via the discharge structure. This resulted in a release to an unrestricted area. Though this release was both monitored and controlled, it was not through the normally utilized liquid radwaste system but the release to the unrestricted area did in fact take the same release path to the river. The regulatory discreteness of this release is discussed in the 1996 evaluation of the release, which is documented in the 10CFR50.59 Evaluation titled "Unit 1 RHR Service Water: Release of Contaminated Water."

The requirements of the Radioactive Effluent Controls Program are spelled out in TS 5.5.4. The Offsite Dose Calculation Manual (ODCM) implements this program and it conforms to the requirements of 10CFR50.36a for the control of radioactive effluents and for maintaining the doses as low as reasonable achievable. Compliance with TS 5.5.4 regarding liquid releases can be assured by adhering to the requirements of ODCM sections 2.1.2, 2.1.3 and 2.1.4 which respectively provide limits on the concentration of the radioactive material at the point of release to an unrestricted area, the resultant dose to a member of the public from the release, and the necessity of using the radwaste treatment system.

MWO 1-96-02845 was worked during the Unit 1 outage to repair the leaks in the U1 RHR "B" Heat Exchanger. The RHR side of the Heat Exchanger was pressurized with helium and a helium detector on the RHRSW side was used to look for the presence of leaks. Based on this it was determined that one of the outermost tubes (tube 1-1) was definitely leaking. No other tubes were identified as definite leakers; however, the eight tubes closest to tube 1-1 were identified as possible leakers.

Integrated Technologies, Inc. performed an eddy current inspection of 245 of the tubes, including all of the suspected leakers and surrounding tubes. This inspection also identified tube 1-1 as a leaker. The tube breach is located next to the top support in the outlet leg. The cause is unknown. No other leaking tubes were identified.

The conservative decision was made to plug the leaker as well as the eight surrounding tubes. After plugging the tubes a hydrostatic pressure test was conducted at 300 psi and the Heat Exchanger was inspected for signs of leakage. No leakage was noted at this time. The Heat Exchanger was decorined, closed up and placed back in service. The Chemistry Department has sampled and monitored the activity during the operation of the Heat Exchanger.

The only radionuclide found in the RHRSW samples for 2010 was on 4/26/10 when the total concentration released was 1.49E-8 µCi/ml. As shown in the following table, the highest concentrations were found in 1997, when the total concentration released was 1.21E-5 µCi/ml.

Radio-nuclide	1997 (µCi/ml)	1998 (µCi/ml)	1999 (µCi/ml)	2000 (µCi/ml)	2001 (µCi/ml)
Cr-51	1.07E-6				3.16E-7
Mn-54	2.37E-6	4.95E-7		2.49E-7	2.53E-7
Fe-59					1.19E-7
Co-60	4.94E-6	1.12E-6	2.27E-8	2.82E-7	1.99E-7
Zn-65	2.06E-6	7.96E-8			2.24E-7
Co-58	1.06E-6				
Cs-134	2.10E-7				
Cs-137	4.43E-7				

Radio-nuclide	2002 (µCi/ml)	2003 (µCi/ml)	2004 (µCi/ml)	2005 (µCi/ml)	2006 (µCi/ml)	2007 (µCi/ml)	2008 (µCi/ml)	2009 (µCi/ml)	2010 (µCi/ml)
Mn-54	2.78E-8	1.46E-8		8.59E-9		1.23E-8	1.89E-8		
Co-60	1.99E-7	2.65E-7	3.78E-8	2.96E-8	1.24E-7	2.43E-7	1.12E-8	2.76E-8	1.49E-8
Nb-95						5.46E-9			
Cs-137						7.77E-9			

Fe-59 was identified in one sample (7/18/01). Heat exchanger testing and the analysis result indicate no new leaks to the system. The results of the samples analyzed in 2005 indicate we are monitoring residual contamination from the 1996 leaks.

ODCM section 2.1.2 requires that the concentrations of the radioactive materials released be limited to 10 times (10X) the concentrations specified in 10CFR20, Appendix B, Table 2, Column 2, with the exception for dissolved or entrained noble gases whose concentration shall be limited to 1.0E-4 µCi/ml.

The following discussion is based on a release duration of 1 minute, a release volume of 4,000 gallons, a total dilution of only 10,000 gallons, and the radionuclide concentrations from 1997. This is a very conservative estimate, since credit for the additional dilution provided by the circulating water flume was not taken into consideration and the activity from 1997 was higher with more radionuclides. The sum of the ratios of the concentration of each radionuclide in the mixture to its effluent concentration limit (ECL) was 1.15. The sum of the ECL fractions must be less than ten (<10) to ensure that the concentration limit for the mixture is not exceeded. As can be seen, the sum is much less that ten. (10CFR20 Appendix B states that the sum of the fractions of the nuclides divided by their effluent concentration limits (ECLs) must be less than one. Further NRC guidance, Technical Specifications, and the ODCM allow the

ECLs in Appendix B to be increased by a factor of 10. Mathematically this can be achieved by dividing the nuclides by the original 10CFR 20 Appendix B ECLs and insuring that the sum of the fractions is less than 10. The plant software performs the sum of the ECL fractions and comparisons this way to insure compliance with 10CRF20 limits.)

ODCM section 2.1.3 requires that the annual dose to a member of the public, in unrestricted areas, due to liquid releases from each unit be limited to 3 mrem to the total body and 10 mrem to any organ. The dose in any quarter is limited to half of the annual limits. Dose calculations were performed for this release, in accordance with ODCM section 2.4, to evaluate the doses relative to this release. The total body dose was 6.66 E-5 mrem (2.2 E-3 % of its annual limit) and the highest organ dose was 7.39 E-5 mrem to the GI-LLI, gastrointestinal track, (7.4 E-4 % of its annual limit). The resultant doses are quite low and essentially do not contribute to the quarterly and/or the annual dose limits. This provides a high degree of assurance that the release in no way presented a threat to the health and safety of a member of the public, even using the very low dilution rate. With a higher dilution value the ECL fraction and the resultant doses are reduced further and become even less significant.

ODCM section 2.1.4 requires that the radwaste system be employed to reduce the radioactivity in the liquid waste prior to its discharge whenever the projected dose due to the release would exceed 0.06 mrem to the total body and 0.2 mrem to any organ. As shown in the previous paragraph, the total body dose due to the release of the RHRSW was much less than 0.06 mrem and the maximum organ dose was much less than 0.2 mrem.

10CFR20.1302 (b)(I) requires that a licensee show compliance with the annual limit of 100 mrem to any member of the public by demonstrating that certain concentration limits of the effluent at the point of release are not exceeded. This was addressed above in the assessment of ODCM section 2.1.2.

10CFR20.1501 (a)(2)(ii) & (iii) requires the licensee to evaluate the concentration or quantities of radioactive materials and the potential radiological hazard, respectively. The concentrations and quantity of the radioactive materials in the release was evaluated by sampling and analysis as discussed above. The potential radiological hazard was also evaluated by performance of the dose calculations, which would be a result of the release, as discussed above in the assessment of ODCM section 2.1.3.

This release does not constitute a Licensee Event Report (LER) based on the following. 10CFR 50.73 (A)(2)(VIII)(B) requires the licensee to report any liquid effluent release which exceeds 20 times the applicable concentration specified in 10CFR20, Appendix B, Table 2, column 2, at the point of entry into the receiving waters (i.e., unrestricted area). This is justified as discussed above in the assessment of ODCM section 2.1.3; it can be seen that the concentrations are much less that the applicable limits.

Design Criterion 64 in Appendix A to 10CFR50 requires the monitoring of effluent discharge paths. Performance of the sampling and analysis of the RHRSW service water before its release complied with this criterion.

Compliance with Appendix I to 10CFR50 was assured by adherence to the applicable ODCM sections as discussed above. Furthermore, Appendix I is the bases for one of these ODCM sections.

40CFR190 is concerned with the annual dose to any member of the public due to releases of radioactivity and to radiation from the uranium fuel cycle sources. This is addressed by TS 5.5.4.j and implemented by ODCM section 5.1.2, which states that additional calculation and reporting is required when any of the dose limits as specified in the ODCM sections 2.1.3, 3.1.3, or 3.1.4 are exceeded by a factor of two. This requirement is not applicable for the release based on the doses as discussed above in the assessment of ODCM section 2.1.3.

NRC Bulletin 80-10, "Contamination of Nonradioactive Systems and Resulting Potential for Unmonitored, Uncontrolled Releases of Radioactivity to the Environment" lists four actions for the licensee. First: identify the affected systems; the Unit 1 RHR "B" loop was identified. Second: establish a sampling/analysis of monitoring program for the affected systems; this was done. Third: restrict use of the system until the cause of the contamination is identified and corrected, and the system is decontaminated. The release was the result of identifying the leakage, implementation of corrective action and of decontaminating the system. The third action also states, that, if it is considered necessary to continue operation of the system as contaminated, then a 10CFR50.59 evaluation must be performed. This was done in 1996. The fourth action calls attention to the regulations to be complied with and states that releases must be monitored and controlled. The release of the RHR service water was sampled and monitored (evaluated) by the sampling and analysis prior to the flush taking place; the release was controlled in the fact that the flush was a planned evolution.

Administrative controls and sampling have been established to ensure that any future releases would be within 10CFR20 limits, reference Lab Standing Order, SO-HPC-001-0402, and 64CH-SAM-028-0.

SOUTHERN COMPANY

E. I. HATCH NUCLEAR PLANT

UNITS NO. 1 & 2

ANNUAL REPORT

JANUARY 1, 2010 - DECEMBER 31, 2010

APPENDIX B

Hatch Nuclear Plant
Appendix B

CARBON-14

Carbon-14 (C-14) is a naturally-occurring radionuclide with a 5730 year half life. Nuclear weapons testing in the 1950s and 1960s significantly increased the amount of C-14 in the atmosphere. Nuclear power plants also produce C-14, but the amount is infinitesimal compared to what has been distributed in the environment due to weapons testing and what is produced by natural cosmic ray interactions.

As nuclear plants have improved gaseous waste processing systems and improved fuel performance, the percentages of "principal radionuclides" in gaseous effluents have changed, and C-14 has become a larger percentage. "Principal radionuclides" are determined based on public dose contribution or the amount of activity discharged compared to other radionuclides of the same effluent type. In Revision 2 (June 2009) of Regulatory Guide 1.21 (RG 1.21), "Measuring, Evaluating, and Reporting Radioactive Material in Liquid and Gaseous Effluents and Solid Waste," the NRC recommended re-evaluating "principal radionuclides" and reporting C-14 as appropriate. In 2010 Radioactive Effluent Release Reports, virtually all U. S. nuclear power plants will report C-14 amounts released and resulting doses to the maximally exposed member of the public.

Because C-14 is considered a hard-to-detect radionuclide which must be chemically separated from the effluent stream before it can be measured, RG 1.21 provides the option of calculating the C-14 source term based on power generation. The Electric Power Research Institute (EPRI) developed an accepted methodology for calculating C-14, and published the results in Technical Report 1021106 (December 2010), "Estimation of Carbon-14 in Nuclear Power Plant Gaseous Effluents." Evaluation of C-14 in radioactive liquid effluents is not required because the quantity and dose contribution has been determined to be insignificant.

At Plant Hatch, the quantity of C-14 released in gaseous effluents in 2010 was estimated to be 14.16 Curies (per unit). Approximately 95% of the C-14 released is in the form of $^{14}CO_2$ and is incorporated into plants through photosynthesis. Ingestion dose results from this pathway. The remaining 5% is estimated to be organic. Both the organic and inorganic forms of C-14 contribute to inhalation dose. A child is the maximally exposed individual, and bone dose is the highest organ dose. Using the dose calculation methodology from the Hatch ODCM, the resulting bone dose to a child located at the controlling receptor location would be 1.59E-01 mrem in a year which is 1.06% of the regulatory limit of 15 mrem per year (per unit) to any organ due to gaseous effluents. The resulting total body dose to a child located at the controlling receptor location would be 3.18E-02 mrem in a year which is 0.21% of the regulatory limit of 15 mrem per year (per unit) total body dose due to gaseous effluents

Edwin I. Hatch Nuclear Plant
Joseph M. Farley Nuclear Plant
Vogtle Electric Generating Plant
Annual Radioactive Effluent Release Reports for 2010

Enclosure 2

Farley Annual Radioactive Effluent Release Report for 2010

SOUTHERN NUCLEAR OPERATING COMPANY
FARLEY NUCLEAR PLANT UNIT NO. ONE
LICENSE NO. NPF-2
AND
FARLEY NUCLEAR PLANT UNIT NO. TWO
LICENSE NO. NPF-8

ANNUAL RADIOACTIVE EFFLUENT RELEASE REPORT
CALENDAR YEAR 2010

FARLEY NUCLEAR PLANT
ANNUAL RADIOACTIVE EFFLUENT
RELEASE REPORT

SECTION	TITLE	PAGE
1.0	LIQUID EFFLUENTS	1
1.1	Regulatory Requirements	1
1.1.1	Concentration Limits	1
1.1.2	Dose Limits	1
1.2	Effluent Concentration Limit (ECL)	1
1.3	Measurements and Approximation of Total Radioactivity	2
1.3.1	Total Radioactivity Determination	2
1.3.2	Total Error Estimation	3
1.4	Liquid Effluents - Release Data	3
1.5	Radiological Impact Due to Liquid Releases	3
1.6	Liquid Effluents - Batch Releases	4
1.7	Liquid Effluents - Abnormal Releases	4
2.0	GASEOUS EFFLUENTS	26
2.1	Regulatory Requirements	26
2.1.1	Dose Rate Limits	26
2.1.2	Air Doses Due to Noble Gases in Gaseous Releases	26
2.1.3	Doses to a Member of the Public	27
2.2	Measurements and Approximation of Total Radioactivity	27
2.2.1	Sample Collection and Analysis	28

FARLEY NUCLEAR PLANT
ANNUAL RADIOACTIVE EFFLUENT
RELEASE REPORT

SECTION	TITLE	PAGE
2.2.2	Total Quantities of Radioactivity, Dose Rates and Cumulative Doses	28
2.2.2.1	Fission and Activation Gases	29
2.2.2.2	Radioiodine, Tritium and Particulate Releases	29
2.2.2.3	Gross Alpha Release	30
2.2.3	Total Error Estimation	30
2.3	Gaseous Effluent Release Data	31
2.4	Radiological Impact Due to Gaseous Releases	32
2.5	Gaseous Effluents - Batch Releases	32
2.6	Gaseous Effluents - Abnormal Releases	32
3.0	SOLID WASTE	59
3.1	Regulatory Requirements	59
3.1.1	Solid Radioactive Waste System	59
3.1.2	Reporting Requirements	59
3.2	Solid Waste Data	59
4.0	DOSES TO MEMBERS OF THE PUBLIC INSIDE THE SITE BOUNDARY	62
4.1	Regulatory Requirements	62
4.2	Demonstration of Compliance	62

FARLEY NUCLEAR PLANT
ANNUAL RADIOACTIVE EFFLUENT
RELEASE REPORT

SECTION	TITLE	PAGE
5.0	TOTAL DOSE FROM URANIUM FUEL CYCLE (40CFR190)	67
5.1	Regulatory Requirements	67
5.2	Demonstration of Compliance	67
6.0	METEOROLOGICAL DATA	67
7.0	PROGRAM DEVIATIONS	67
7.1	Inoperable Liquid or Gaseous Effluent Monitoring Instrumentation	67
7.1.1	Regulatory Requirements	67
7.1.2	Description of Deviations	68
7.2	Effluent Sample Analysis Exceeding Minimum Detectable Concentration (MDC)	68
7.2.1	Regulatory Requirements	68
7.2.2	Description of Deviations	68
7.3	Incorrect Compositing of Liquid or Gaseous Effluent Samples	68
7.3.1	Regulatory Requirements	68
7.3.2	Description of Deviations	69
8.0	CHANGES TO THE PLANT FARLEY ODCM	69
8.1	Regulatory Requirements	69
8.2	Description of Changes	69

FARLEY NUCLEAR PLANT
ANNUAL RADIOACTIVE EFFLUENT
RELEASE REPORT

SECTION	TITLE	PAGE
9.0	MAJOR CHANGES TO LIQUID, GASEOUS, OR SOLID RADWASTE TREATMENT SYSTEMS	70
9.1	Regulatory Requirements	70
9.2	Description of Major Changes	70
App.A	Appendix A, Carbon-14 Supplement for 2010	71

FARLEY NUCLEAR PLANT
ANNUAL RADIOACTIVE EFFLUENT
RELEASE REPORT

TABLE	LIST OF TABLES	PAGE
1-1A	Liquid Effluents - Summation of All Releases, Unit 1 (Quarters 1,2, 3 and 4)	5
1-1B	Liquid Effluents - Summation of All Releases, Unit 2 (Quarters 1,2, 3 and 4)	6
1-1C	Liquid Effluents - Summation of All Releases, Site (Quarters 1,2, 3 and 4)	7
1-2A	Liquid Effluents, Unit 1 (Quarters 1,2, 3 and 4)	8
1-2B	Liquid Effluents, Unit 2 (Quarters 1,2, 3 and 4)	11
1-2C	Liquid Effluents, Site (Quarters 1,2, 3 and 4)	15
1-3A	Doses to a MEMBER OF THE PUBLIC Due to Liquid Releases, Unit 1 (Quarters 1,2,3 and 4)	19
1-3B	Doses to a MEMBER OF THE PUBLIC Due to Liquid Releases, Unit 2 (Quarters 1,2,3 and 4)	20
1-4	Minimum Detectable Concentration - Liquid Sample Analyses	21
1-5A	Liquid Effluents - Batch Release Summary, Unit 1	22
1-5B	Liquid Effluents - Batch Release Summary, Unit 2	23

FARLEY NUCLEAR PLANT
ANNUAL RADIOACTIVE EFFLUENT
RELEASE REPORT

TABLE	LIST OF TABLES	PAGE
1-6A	Liquid Effluents - Abnormal Release Summary, Unit 1	24
1-6B	Liquid Effluents - Abnormal Release Summary, Unit 2	25
2-1A	Gaseous Effluents - Summation of All Releases, Unit 1 (Quarters 1,2, 3 and 4)	33
2-1B	Gaseous Effluents - Summation of All Releases, Unit 2 (Quarters 1,2, 3 and 4)	34
2-1C	Gaseous Effluents - Summation of All Releases, Site (Quarters 1,2, 3 and 4)	35
2-2A	Gaseous Effluents - Mixed Mode Level Releases, Unit 1 (Quarters 1,2, 3 and 4)	36
2-2B	Gaseous Effluents - Mixed Mode Level Releases, Unit 2 (Quarters 1,2, 3 and 4)	39
2-2C	Gaseous Effluents - Mixed Mode Level Releases, Site (Quarters 1,2, 3 and 4)	41
2-3A	Gaseous Effluents - Ground Level Releases, Unit 1 (Quarters 1,2, 3 and 4)	44
2-3B	Gaseous Effluents - Ground Level Releases, Unit 2 (Quarters 1,2, 3 and 4)	46
2-3C	Gaseous Effluents - Ground Level Releases, Site (Quarters 1,2, 3 and 4)	48

FARLEY NUCLEAR PLANT
ANNUAL RADIOACTIVE EFFLUENT
RELEASE REPORT

TABLE	LIST OF TABLES	PAGE
2-4A	Air Doses Due to Noble Gases in Gaseous Releases, Unit 1 (Quarters 1,2, 3 and 4)	50
2-4B	Air Doses Due to Noble Gases in Gaseous Releases, Unit 2 (Quarters 1,2, 3 and 4)	51
2-5A	Doses to a MEMBER OF THE PUBLIC Due to Radioiodines, Tritium, and Particulates in Gaseous Releases, Unit 1 (Quarters 1,2,3 and 4)	52
2-5B	Doses to a MEMBER OF THE PUBLIC Due to Radioiodines, Tritium, and Particulates in Gaseous Releases, Unit 2 (Quarters 1,2,3 and 4)	53
2-6	Minimum Detectable Concentration - Gaseous Effluent Analyses	54
2-7A	Gaseous Effluents - Batch Release Summary, Unit 1	55
2-7B	Gaseous Effluents - Batch Release Summary, Unit 2	56
2-8A	Gaseous Effluents - Abnormal Release Summary, Unit 1	57
2-8B	Gaseous Effluents - Abnormal Release Summary, Unit 2	58
3-1	Solid Waste and Irradiated Fuel Shipments	60
4-1	Doses to a MEMBER OF THE PUBLIC Due to Activities Inside the Site Boundary, Site	63

1.0 LIQUID EFFLUENTS

This section contains applicable ODCM limits for liquid effluents as well as the quantities of radioactive liquid effluents released during 2010. These quantities are summarized on a quarterly basis and include any unplanned releases. A tabulation of the total body and organ doses which were calculated in accordance with ODCM 2.4 are presented to show conformance with the limits of ODCM 2.1.3.

1.1 Regulatory Requirements

1.1.1 Concentration Limits

Technical Specifications 5.5.4.b and 5.5.4.c state that the concentration of radioactive material released in liquid effluents to UNRESTRICTED AREAS (see ODCM Figure 10-1) shall be limited at all times to ten times the concentrations specified in 10CFR20, Appendix B, Table 2, Column 2 for radionuclides other than dissolved or entrained noble gases. For dissolved or entrained noble gases, the concentration shall be limited to 1.0E-04 uCi/ml total activity.

1.1.2 Dose Limits

Technical Specifications 5.5.4.d and 5.5.4.e state that the dose or dose commitment to a MEMBER OF THE PUBLIC from radioactive materials in liquid effluents released, from each unit, to UNRESTRICTED AREAS (see ODCM Figure 10-1) shall be limited:

a. During any calendar quarter to less than or equal to 1.5 mrem to the total body and to less than or equal to 5 mrem to any organ, and

b. During any calendar year to less than or equal to 3 mrem to the total body and to less than or equal to 10 mrem to any organ.

1.2 Effluent Concentration Limit (ECL)

ECL values used in determining allowable liquid radwaste release rates and concentrations, for principal gamma emitters, I-131, tritium, Sr-89, Sr-90 and Fe-55, are taken from 10CFR Part 20, Appendix B, Table 2, Column 2. A tolerance factor of up to 10 is utilized to allow flexibility in establishing practical monitor setpoints which can accommodate effluent releases at concentrations higher than the ECL values stated in 10CFR20, Appendix B, Table 2, Column 2.

For dissolved or entrained noble gases in liquid radwaste, the ECL is 1.0E-04 uCi/ml total activity.

For gross alpha in liquid radwaste, the ECL is 2.0E-09 uCi/ml.

Furthermore, for all the above radionuclides, or categories of radioactivity, the overall ECL fraction is determined in accordance with 10CFR Part 20, Appendix B.

1.3 Measurements and Approximation of Total Radioactivity

The radionuclides listed below are considered when evaluating liquid effluents:

MN-54	CS-134
FE-59	CS-137
CO-58	CE-141
CO-60	CE-144
ZN-65	MO-99
SR-89	FE-55
SR-90	H-3
I-131	

1.3.1 Total Radioactivity Determination

Batch Releases: Representative pre-release grab samples are obtained and analyzed in accordance with ODCM Table 2-3. Isotopic analyses are performed using the computerized pulse height analysis system utilizing high resolution germanium detectors. Isotopic values thus obtained are used for release rate calculations as specified in the ODCM. Only those nuclides that are detected are used in the calculations. All Strontium and Iron-55 samples are sent offsite to the Georgia Power Environmental Laboratory for analysis. Gross beta and gross alpha determinations are made using 2 pi gas flow proportional counters. Tritium determinations are made using liquid scintillation techniques. Dissolved gases are determined employing grab sampling techniques and then counting on the pulse height analyzer.

The sample analyses results are used along with the ECL values to determine the ECL fraction for the planned release. The ECL fraction is then used, with the appropriate safety factors, and the expected dilution stream flow, to calculate the maximum permissible release rate and a liquid effluent monitor setpoint. The monitor setpoint is calculated to assure that the limits of the ODCM are not exceeded. A monitor reading in excess of the calculated setpoint will result in automatic termination of the liquid radwaste discharge.

Radionuclide concentrations, safety factors, dilution stream flow rate, and liquid effluent radiation monitor calibration factors are used by the computer to generate a pre-release printout. If the release is not permissible, appropriate warnings will be displayed on the computer screen and on the printout. If the release is permissible, it is approved by a Chemistry Technician. The release permit is transferred from the Chemistry Department to the Operations Department for release. When the release is completed, the actual release data are provided to the Chemistry Department. These release data, including release rate and release duration, are input into the computer and a post-release printout is generated. This printout contains the actual release rates, radionuclide concentrations and quantities, dilution flow, and calculated doses to an individual.

Continuous Releases: Continuous releases are analogous to batch releases except that they are analyzed on a weekly composite basis in accordance with ODCM Table 2-3.

Typically achieved liquid effluent sample analyses minimum detectable concentrations are reported in Table 1-4.

1.3.2 Total Error Estimation

The maximum error associated with volume and flow measurements, based upon plant calibration practice is estimated to be + or - 10%. The average error associated with counting is estimated to be less than + or - 15%.

1.4 Liquid Effluent Release Data

Summaries of all radioactive liquid effluents released from Units 1 and 2 during 2010 are presented in accordance with Regulatory Guide 1.21 Tables 2A and 2B. Information required by Table 2A is found in this report in Tables 1-1A, 1-1B, and 1-1C; Table 2-B information is presented in Tables 1-2A, 1-2B, and 1-2C. Data is presented on a quarterly basis as required by Regulatory Guide 1.21 for all four quarters.

1.5 Radiological Impact Due to Liquid Releases

The total body and organ doses for Units 1 and 2 are provided in the following tables in order to show conformance with the limits of ODCM 2.1.3:

Unit 1 2010 Doses to a Member of the Public due to Liquid Releases: Table 1-3A

Unit 2 2010 Doses to a Member of the Public due to Liquid Releases: Table 1-3B

1.6 Liquid Effluents - Batch Releases

Batch release information for Units 1 and 2 is summarized in the following tables:

Unit 1 2010 Liquid Effluents - Batch Release Summary: Table 1-5A

Unit 2 2010 Liquid Effluents - Batch Release Summary: Table 1-5B

1.7 Liquid Effluents - Abnormal Releases

There were no abnormal releases during 2010.

Abnormal release information for Units 1 and 2 is summarized in the following tables:

Unit 1 2010 Liquid Effluents - Abnormal Release Summary: Table 1-6A

Unit 2 2010 Liquid Effluents - Abnormal Release Summary: Table 1-6B

Table 1-1A
Joseph M Farley Nuclear Plant
RADIOACTIVE EFFLUENT RELEASE REPORT - 2010
Liquid Effluents - Summation of All Releases
Unit: 1
Starting: 1-Jan- 2010 Ending: 31-Dec-2010

Type of Effluent	Units	1ST Quarter	2ND Quarter	3RD Quarter	4TH Quarter
A. Fission And Activation Products					
1. Total Release (not including tritium, gases, alpha)	Curies	2.41E-03	5.63E-03	2.17E-03	3.42E-02
2. Average diluted concentration during period	uCi/mL	1.60E-10	3.26E-10	1.28E-10	2.79E-09
3. Percent of Applicable Limit	%	*	*	*	*
B. Tritium					
1. Total Release	Curies	2.21E+02	1.52E+02	2.21E+02	1.95E+01
2. Average diluted Concentration during period	uCi/mL	1.46E-05	8.79E-06	1.30E-05	1.59E-06
3. Percent of Applicable Limit	%	*	*	*	*
C. Dissolved and Entrained Gases					
1. Total Release	Curies	5.03E-04	1.02E-04	2.03E-03	1.16E-04
2. Average diluted Concentration during period	uCi/mL	3.33E-11	5.90E-12	1.19E-10	9.45E-12
3. Percent of Applicable Limit	%	*	*	*	*
D: Gross Alpha Radioactivity					
1. Total Release	Curies	1.13E-05	4.04E-06	5.93E-06	3.27E-06
E: Waste Vol Release (Pre-Dilution)	Liters	7.59E+07	7.17E+07	7.22E+07	5.43E+07
F. Volume of Dilution Water Used	Liters	1.50E+10	1.72E+10	1.70E+10	1.22E+10

* Applicable limits are expressed in terms of dose. See Tables 1-3A and 1-3B of this report.

Table 1-1B
Joseph M Farley Nuclear Plant
RADIOACTIVE EFFLUENT RELEASE REPORT - 2010
Liquid Effluents - Summation of All Releases
Unit: 2
Starting: 1-Jan- 2010 Ending: 31-Dec-2010

Type of Effluent	Units	1ST Quarter	2ND Quarter	3RD Quarter	4TH Quarter
A. Fission And Activation Products					
1. Total Release (not including tritium, gases, alpha)	Curies	4.37E-03	1.57E-02	1.24E-02	2.10E-02
2. Average diluted concentration during period	uCi/mL	2.61E-10	1.25E-09	7.08E-10	1.30E-09
3. Percent of Applicable Limit	%	*	*	*	*
B. Tritium					
1. Total Release	Curies	2.03E+02	3.75E+01	1.16E+02	6.44E+01
2. Average diluted Concentration during period	uCi/mL	1.21E-05	2.97E-06	6.62E-06	3.99E-06
3. Percent of Applicable Limit	%	*	*	*	*
C. Dissolved and Entrained Gases					
1. Total Release	Curies	5.67E-04	1.01E-04	2.23E-03	7.52E-04
2. Average diluted Concentration during period	uCi/mL	3.38E-11	8.04E-12	1.27E-10	4.66E-11
3. Percent of Applicable Limit	%	*	*	*	*
D: Gross Alpha Radioactivity					
1. Total Release	Curies	0.00E+00	4.91E-06	2.06E-06	6.18E-06
E: Waste Vol Release (Pre-Dilution)	Liters	7.38E+07	5.47E+07	7.16E+07	6.78E+07
F. Volume of Dilution Water Used	Liters	1.67E+10	1.26E+10	1.75E+10	1.61E+10

* Applicable limits are expressed in terms of dose. See Tables 1-3A and 1-3B of this report.

Table 1-1C
Joseph M Farley Nuclear Plant
RADIOACTIVE EFFLUENT RELEASE REPORT - 2010
Liquid Effluents - Summation of All Releases
Unit: Site
Starting: 1-Jan- 2010 Ending: 31-Dec-2010

Type of Effluent	Units	1ST Quarter	2ND Quarter	3RD Quarter	4TH Quarter
A. Fission And Activation Products					
1. Total Release (not including tritium, gases, alpha)	Curies	6.78E-03	2.13E-02	1.46E-02	5.52E-02
2. Average diluted concentration during period	uCi/mL	2.13E-10	7.14E-10	4.22E-10	1.94E-09
3. Percent of Applicable Limit	%	*	*	*	*
B. Tritium					
1. Total Release	Curies	4.24E+02	1.89E+02	3.37E+02	8.39E+01
2. Average diluted Concentration during period	uCi/mL	1.33E-05	6.33E-06	9.74E-06	2.95E-06
3. Percent of Applicable Limit	%	*	*	*	*
C. Dissolved and Entrained Gases					
1. Total Release	Curies	1.07E-03	2.03E-04	4.26E-03	8.68E-04
2. Average diluted Concentration during period	uCi/mL	3.36E-11	6.80E-12	1.23E-10	3.05E-11
3. Percent of Applicable Limit	%	*	*	*	*
D: Gross Alpha Radioactivity					
1. Total Release	Curies	1.13E-05	8.95E-06	7.99E-06	9.46E-06
E: Waste Vol Release (Pre-Dilution)	Liters	1.50E+08	1.26E+08	1.44E+08	1.22E+08
F. Volume of Dilution Water Used	Liters	3.17E+10	2.97E+10	3.45E+10	2.83E+10

* Applicable limits are expressed in terms of dose. See Tables 1-3A and 1-3B of this report.

Table 1-2A
Joseph M Farley Nuclear Plant
RADIOACTIVE EFFLUENT RELEASE REPORT - 2010
Liquid Effluents
Unit: 1
Starting: 1-Jan- 2010 Ending: 31-Dec-2010

		Continuous Mode			
Nuclides Released	**Units**	**1ST Quarter**	**2ND Quarter**	**3RD Quarter**	**4TH Quarter**
Fission & Activation Products					
Sr-89	Curies	7.37E-04	0.00E+00	0.00E+00	0.00E+00
Total For Period	**Curies**	**7.37E-04**	**0.00E+00**	**0.00E+00**	**0.00E+00**
Tritium					
No Nuclides Found	Curies	0.00E+00	0.00E+00	0.00E+00	0.00E+00
Dissolved And Entrained Gases					
No Nuclides Found	Curies	0.00E+00	0.00E+00	0.00E+00	0.00E+00

Zeroes in this table indicates that no radioactivity was present at detectable levels.
See Table 1-4 for typical minimum detectable concentrations.

Table 1-2A
Joseph M Farley Nuclear Plant
RADIOACTIVE EFFLUENT RELEASE REPORT - 2010
Liquid Effluents
Unit: 1
Starting: 1-Jan- 2010 Ending: 31-Dec-2010

		Batch Mode			
Nuclides Released	**Units**	**1ST Quarter**	**2ND Quarter**	**3RD Quarter**	**4TH Quarter**
Fission & Activation Products					
Be-7	Curies	0.00E+00	0.00E+00	0.00E+00	5.37E-06
Y-88	Curies	0.00E+00	7.72E-07	0.00E+00	1.25E-06
Y-91	Curies	0.00E+00	9.58E-05	0.00E+00	0.00E+00
As-76	Curies	0.00E+00	3.20E-05	0.00E+00	0.00E+00
Br-84	Curies	1.71E-05	0.00E+00	0.00E+00	4.70E-06
Co-57	Curies	1.06E-06	0.00E+00	0.00E+00	2.45E-06
Co-58	Curies	8.55E-05	1.17E-03	3.71E-04	5.50E-03
Co-60	Curies	9.04E-04	1.11E-03	4.91E-04	1.67E-03
Cr-51	Curies	0.00E+00	3.45E-05	2.13E-05	6.86E-04
Fe-55	Curies	2.71E-04	7.92E-04	1.52E-04	3.43E-04
Fe-59	Curies	0.00E+00	3.41E-05	0.00E+00	1.06E-06
I-131	Curies	0.00E+00	0.00E+00	1.62E-07	0.00E+00
Mn-54	Curies	9.06E-06	1.44E-05	0.00E+00	2.65E-05
Nb-95	Curies	1.11E-06	1.74E-05	7.46E-06	3.58E-04
Nb-97	Curies	1.46E-06	5.31E-06	0.00E+00	0.00E+00
Ni-56	Curies	0.00E+00	2.18E-05	6.70E-07	3.47E-05
Sr-89	Curies	7.30E-05	5.25E-05	0.00E+00	0.00E+00
Sr-90	Curies	5.57E-06	0.00E+00	0.00E+00	0.00E+00
Zn-65	Curies	2.21E-04	2.56E-04	1.65E-05	1.68E-04
Zr-95	Curies	0.00E+00	0.00E+00	0.00E+00	1.85E-04
Cs-137	Curies	1.41E-05	5.37E-06	4.73E-05	1.14E-05
Eu-154	Curies	0.00E+00	0.00E+00	0.00E+00	3.13E-06
Pm-149	Curies	0.00E+00	2.69E-05	0.00E+00	0.00E+00
Pr-144	Curies	0.00E+00	0.00E+00	0.00E+00	4.03E-04
Rh-105	Curies	0.00E+00	0.00E+00	4.35E-06	2.85E-04
Ru-103	Curies	0.00E+00	0.00E+00	0.00E+00	7.82E-07
Sb-122	Curies	0.00E+00	7.83E-06	0.00E+00	0.00E+00

Zeroes in this table indicates that no radioactivity was present at detectable levels. See Table 1-4 for typical minimum detectable concentrations.

Table 1-2A
Joseph M Farley Nuclear Plant
RADIOACTIVE EFFLUENT RELEASE REPORT - 2010
Liquid Effluents
Unit: 1
Starting: 1-Jan- 2010 Ending: 31-Dec-2010

		Batch Mode			
Nuclides Released	**Units**	**1ST Quarter**	**2ND Quarter**	**3RD Quarter**	**4TH Quarter**
Sb-124	Curies	0.00E+00	9.84E-06	0.00E+00	2.10E-05
Sb-125	Curies	6.66E-05	9.77E-05	1.31E-04	4.03E-04
Sn-113	Curies	0.00E+00	0.00E+00	0.00E+00	6.14E-06
Te-129	Curies	0.00E+00	0.00E+00	0.00E+00	9.37E-05
Ag-108M	Curies	8.45E-07	1.06E-06	0.00E+00	0.00E+00
Ag-110M	Curies	0.00E+00	0.00E+00	0.00E+00	1.59E-06
Sn-117M	Curies	0.00E+00	0.00E+00	4.30E-07	2.67E-06
Te-125M	Curies	0.00E+00	1.85E-03	9.30E-04	2.39E-02
Te-129M	Curies	0.00E+00	0.00E+00	0.00E+00	6.95E-05
Total For Period	**Curies**	**1.67E-03**	**5.63E-03**	**2.17E-03**	**3.42E-02**
Tritium					
H-3	Curies	2.21E+02	1.52E+02	2.21E+02	1.95E+01
Dissolved And Entrained Gases					
Ar-41	Curies	1.41E-06	1.85E-06	0.00E+00	1.36E-06
Xe-133	Curies	4.99E-04	9.99E-05	2.02E-03	1.12E-04
Xe-135	Curies	0.00E+00	0.00E+00	1.07E-06	2.78E-06
Xe-131M	Curies	0.00E+00	0.00E+00	1.58E-05	0.00E+00
Xe-133M	Curies	2.63E-06	0.00E+00	0.00E+00	0.00E+00
Total For Period	**Curies**	**5.03E-04**	**1.02E-04**	**2.03E-03**	**1.16E-04**

See Table 1-4 for typical minimum detectable concentrations.

Zeroes in this table indicates that no radioactivity was present at detectable levels.

Table 1-2B
Joseph M Farley Nuclear Plant
RADIOACTIVE EFFLUENT RELEASE REPORT - 2010
Liquid Effluents
Unit: 2
Starting: 1-Jan- 2010 Ending: 31-Dec-2010

		Continuous Mode			
Nuclides Released	**Units**	**1ST Quarter**	**2ND Quarter**	**3RD Quarter**	**4TH Quarter**
Fission & Activation Products					
Sr-89	Curies	7.06E-04	0.00E+00	0.00E+00	0.00E+00
Total For Period	**Curies**	**7.06E-04**	**0.00E+00**	**0.00E+00**	**0.00E+00**
Tritium					
No Nuclides Found	Curies	0.00E+00	0.00E+00	0.00E+00	0.00E+00
Dissolved And Entrained Gases					
No Nuclides Found	Curies	0.00E+00	0.00E+00	0.00E+00	0.00E+00

Zeroes in this table indicates that no radioactivity was present at detectable levels.
See Table 1-4 for typical minimum detectable concentrations.

Table 1-2B
Joseph M Farley Nuclear Plant
RADIOACTIVE EFFLUENT RELEASE REPORT - 2010
Liquid Effluents
Unit: 2
Starting: 1-Jan- 2010 Ending: 31-Dec-2010

		Batch Mode			
Nuclides Released	**Units**	**1ST Quarter**	**2ND Quarter**	**3RD Quarter**	**4TH Quarter**
Fission & Activation Products					
Y-88	Curies	5.41E-07	0.00E+00	0.00E+00	0.00E+00
Y-93	Curies	0.00E+00	0.00E+00	0.00E+00	2.48E-05
Y-95	Curies	0.00E+00	0.00E+00	5.42E-06	0.00E+00
As-76	Curies	0.00E+00	1.81E-06	0.00E+00	0.00E+00
Br-84	Curies	0.00E+00	4.81E-06	0.00E+00	0.00E+00
Co-58	Curies	1.24E-04	2.28E-03	5.30E-04	3.40E-03
Co-60	Curies	1.65E-03	2.72E-03	1.16E-03	1.71E-03
Cr-51	Curies	0.00E+00	5.45E-04	2.78E-06	2.33E-04
Cu-64	Curies	0.00E+00	1.26E-06	0.00E+00	0.00E+00
Fe-55	Curies	2.00E-04	2.14E-03	3.48E-04	3.48E-04
Fe-59	Curies	0.00E+00	1.04E-04	0.00E+00	0.00E+00
I-133	Curies	1.64E-06	0.00E+00	0.00E+00	2.12E-06
Mn-54	Curies	1.06E-05	9.44E-05	1.29E-05	4.11E-05
Mn-56	Curies	1.48E-06	0.00E+00	0.00E+00	0.00E+00
Na-24	Curies	1.55E-05	0.00E+00	0.00E+00	1.86E-05
Nb-95	Curies	5.48E-06	3.64E-04	3.78E-05	1.24E-04
Nb-97	Curies	2.43E-06	1.59E-06	3.44E-06	8.12E-06
Ni-56	Curies	0.00E+00	3.34E-05	4.91E-06	1.23E-05
Rb-86	Curies	0.00E+00	0.00E+00	0.00E+00	8.28E-06
Sr-89	Curies	1.90E-04	1.46E-05	0.00E+00	0.00E+00
Sr-90	Curies	9.76E-06	0.00E+00	0.00E+00	0.00E+00
Sr-92	Curies	0.00E+00	1.26E-08	0.00E+00	0.00E+00
Zn-65	Curies	5.23E-04	8.34E-04	2.01E-04	1.92E-04
Zr-95	Curies	0.00E+00	1.86E-04	1.39E-05	6.26E-05
Zr-97	Curies	0.00E+00	0.00E+00	4.97E-07	0.00E+00
Ba-140	Curies	0.00E+00	4.35E-06	0.00E+00	1.99E-05
Cd-115	Curies	0.00E+00	0.00E+00	1.22E-06	0.00E+00

See Table 1-4 for typical minimum detectable concentrations. Zeroes in this table indicates that no radioactivity was present at detectable levels.

Table 1-2B
Joseph M Farley Nuclear Plant
RADIOACTIVE EFFLUENT RELEASE REPORT - 2010
Liquid Effluents
Unit: 2
Starting: 1-Jan- 2010 Ending: 31-Dec-2010

		Batch Mode			
Nuclides Released	**Units**	**1ST Quarter**	**2ND Quarter**	**3RD Quarter**	**4TH Quarter**
Cs-137	Curies	1.07E-04	5.04E-05	2.43E-04	1.53E-04
Eu-154	Curies	0.00E+00	6.71E-08	0.00E+00	0.00E+00
Nd-147	Curies	0.00E+00	0.00E+00	0.00E+00	2.13E-06
Pr-146	Curies	6.65E-06	0.00E+00	0.00E+00	0.00E+00
Rh-105	Curies	0.00E+00	2.08E-04	0.00E+00	1.09E-04
Rh-106	Curies	0.00E+00	0.00E+00	3.44E-06	0.00E+00
Ru-103	Curies	0.00E+00	0.00E+00	0.00E+00	4.07E-07
Ru-106	Curies	0.00E+00	0.00E+00	3.44E-06	0.00E+00
Sb-124	Curies	0.00E+00	4.75E-05	1.24E-06	1.05E-04
Sb-125	Curies	7.69E-04	7.24E-04	2.03E-03	1.42E-03
Sn-113	Curies	5.07E-07	1.48E-06	0.00E+00	1.35E-06
Tc-99M	Curies	2.56E-06	0.00E+00	0.00E+00	7.26E-07
Te-127	Curies	4.09E-05	0.00E+00	0.00E+00	0.00E+00
Te-129	Curies	0.00E+00	0.00E+00	0.00E+00	2.90E-05
Te-132	Curies	0.00E+00	0.00E+00	0.00E+00	2.69E-07
Ag-108M	Curies	3.90E-06	0.00E+00	4.79E-07	4.30E-06
Ag-110M	Curies	0.00E+00	0.00E+00	0.00E+00	2.31E-05
In-115M	Curies	0.00E+00	0.00E+00	1.27E-06	0.00E+00
Sn-117M	Curies	0.00E+00	5.04E-06	3.25E-06	0.00E+00
Te-125M	Curies	0.00E+00	5.34E-03	7.83E-03	1.29E-02
Total For Period	**Curies**	**3.66E-03**	**1.57E-02**	**1.24E-02**	**2.10E-02**
Tritium					
H-3	Curies	2.03E+02	3.75E+01	1.16E+02	6.44E+01

See Table 1-4 for typical minimum detectable concentrations.

Zeroes in this table indicates that no radioactivity was present at detectable levels.

Table 1-2B
Joseph M Farley Nuclear Plant
RADIOACTIVE EFFLUENT RELEASE REPORT - 2010
Liquid Effluents
Unit: 2
Starting: 1-Jan- 2010 Ending: 31-Dec-2010

		Batch Mode			
Nuclides Released	**Units**	**1ST Quarter**	**2ND Quarter**	**3RD Quarter**	**4TH Quarter**
Dissolved And Entrained Gases					
Ar-41	Curies	7.63E-06	2.55E-06	0.00E+00	0.00E+00
Kr-85M	Curies	4.55E-07	0.00E+00	4.49E-07	0.00E+00
Xe-133	Curies	5.49E-04	9.88E-05	2.22E-03	7.52E-04
Xe-135	Curies	1.02E-06	0.00E+00	3.82E-07	0.00E+00
Xe-135M	Curies	8.41E-06	0.00E+00	0.00E+00	0.00E+00
Total For Period	**Curies**	**5.67E-04**	**1.01E-04**	**2.23E-03**	**7.52E-04**

Zeroes in this table indicates that no radioactivity was present at detectable levels.
See Table 1-4 for typical minimum detectable concentrations.

Table 1-2C
Joseph M Farley Nuclear Plant
RADIOACTIVE EFFLUENT RELEASE REPORT - 2010
Liquid Effluents
Unit: Site
Starting: 1-Jan- 2010 Ending: 31-Dec-2010

		Continuous Mode			
Nuclides Released	**Units**	**1ST Quarter**	**2ND Quarter**	**3RD Quarter**	**4TH Quarter**
Fission & Activation Products					
Sr-89	Curies	1.44E-03	0.00E+00	0.00E+00	0.00E+00
Total For Period	**Curies**	**1.44E-03**	**0.00E+00**	**0.00E+00**	**0.00E+00**
Tritium					
No Nuclides Found	Curies	0.00E+00	0.00E+00	0.00E+00	0.00E+00
Dissolved And Entrained Gases					
No Nuclides Found	Curies	0.00E+00	0.00E+00	0.00E+00	0.00E+00

Zeroes in this table indicates that no radioactivity was present at detectable levels.
See Table 1-4 for typical minimum detectable concentrations.

Table 1-2C
Joseph M Farley Nuclear Plant
RADIOACTIVE EFFLUENT RELEASE REPORT - 2010
Liquid Effluents
Unit: Site
Starting: 1-Jan- 2010 Ending: 31-Dec-2010

		Batch Mode			
Nuclides Released	**Units**	**1ST Quarter**	**2ND Quarter**	**3RD Quarter**	**4TH Quarter**
Fission & Activation Products					
Be-7	Curies	0.00E+00	0.00E+00	0.00E+00	5.37E-06
Y-88	Curies	5.41E-07	7.72E-07	0.00E+00	1.25E-06
Y-91	Curies	0.00E+00	9.58E-05	0.00E+00	0.00E+00
Y-93	Curies	0.00E+00	0.00E+00	0.00E+00	2.48E-05
Y-95	Curies	0.00E+00	0.00E+00	5.42E-06	0.00E+00
As-76	Curies	0.00E+00	3.38E-05	0.00E+00	0.00E+00
Br-84	Curies	1.71E-05	4.81E-06	0.00E+00	4.70E-06
Co-57	Curies	1.06E-06	0.00E+00	0.00E+00	2.45E-06
Co-58	Curies	2.09E-04	3.44E-03	9.00E-04	8.91E-03
Co-60	Curies	2.55E-03	3.83E-03	1.65E-03	3.39E-03
Cr-51	Curies	0.00E+00	5.80E-04	2.41E-05	9.20E-04
Cu-64	Curies	0.00E+00	1.26E-06	0.00E+00	0.00E+00
Fe-55	Curies	4.71E-04	2.93E-03	5.00E-04	6.91E-04
Fe-59	Curies	0.00E+00	1.38E-04	0.00E+00	1.06E-06
I-131	Curies	0.00E+00	0.00E+00	1.62E-07	0.00E+00
I-133	Curies	1.64E-06	0.00E+00	0.00E+00	2.12E-06
Mn-54	Curies	1.97E-05	1.09E-04	1.29E-05	6.76E-05
Mn-56	Curies	1.48E-06	0.00E+00	0.00E+00	0.00E+00
Na-24	Curies	1.55E-05	0.00E+00	0.00E+00	1.86E-05
Nb-95	Curies	6.59E-06	3.81E-04	4.53E-05	4.82E-04
Nb-97	Curies	3.88E-06	6.90E-06	3.44E-06	8.12E-06
Ni-56	Curies	0.00E+00	5.52E-05	5.58E-06	4.69E-05
Rb-86	Curies	0.00E+00	0.00E+00	0.00E+00	8.28E-06
Sr-89	Curies	2.63E-04	6.72E-05	0.00E+00	0.00E+00
Sr-90	Curies	1.53E-05	0.00E+00	0.00E+00	0.00E+00
Sr-92	Curies	0.00E+00	1.26E-08	0.00E+00	0.00E+00
Zn-65	Curies	7.44E-04	1.09E-03	2.18E-04	3.60E-04

See Table 1-4 for typical minimum detectable concentrations. Zeroes in this table indicates that no radioactivity was present at detectable levels.

Table 1-2C
Joseph M Farley Nuclear Plant
RADIOACTIVE EFFLUENT RELEASE REPORT - 2010
Liquid Effluents
Unit: Site
Starting: 1-Jan- 2010 Ending: 31-Dec-2010

		Batch Mode			
Nuclides Released	**Units**	**1ST Quarter**	**2ND Quarter**	**3RD Quarter**	**4TH Quarter**
Zr-95	Curies	0.00E+00	1.86E-04	1.39E-05	2.48E-04
Zr-97	Curies	0.00E+00	0.00E+00	4.97E-07	0.00E+00
Ba-140	Curies	0.00E+00	4.35E-06	0.00E+00	1.99E-05
Cd-115	Curies	0.00E+00	0.00E+00	1.22E-06	0.00E+00
Cs-137	Curies	1.21E-04	5.57E-05	2.90E-04	1.64E-04
Eu-154	Curies	0.00E+00	6.71E-08	0.00E+00	3.13E-06
Nd-147	Curies	0.00E+00	0.00E+00	0.00E+00	2.13E-06
Pm-149	Curies	0.00E+00	2.69E-05	0.00E+00	0.00E+00
Pr-144	Curies	0.00E+00	0.00E+00	0.00E+00	4.03E-04
Pr-146	Curies	6.65E-06	0.00E+00	0.00E+00	0.00E+00
Rh-105	Curies	0.00E+00	2.08E-04	4.35E-06	3.94E-04
Rh-106	Curies	0.00E+00	0.00E+00	3.44E-06	0.00E+00
Ru-103	Curies	0.00E+00	0.00E+00	0.00E+00	1.19E-06
Ru-106	Curies	0.00E+00	0.00E+00	3.44E-06	0.00E+00
Sb-122	Curies	0.00E+00	7.83E-06	0.00E+00	0.00E+00
Sb-124	Curies	0.00E+00	5.74E-05	1.24E-06	1.26E-04
Sb-125	Curies	8.36E-04	8.21E-04	2.16E-03	1.82E-03
Sn-113	Curies	5.07E-07	1.48E-06	0.00E+00	7.49E-06
Tc-99M	Curies	2.56E-06	0.00E+00	0.00E+00	7.26E-07
Te-127	Curies	4.09E-05	0.00E+00	0.00E+00	0.00E+00
Te-129	Curies	0.00E+00	0.00E+00	0.00E+00	1.23E-04
Te-132	Curies	0.00E+00	0.00E+00	0.00E+00	2.69E-07
Ag-108M	Curies	4.74E-06	1.06E-06	4.79E-07	4.30E-06
Ag-110M	Curies	0.00E+00	0.00E+00	0.00E+00	2.47E-05
In-115M	Curies	0.00E+00	0.00E+00	1.27E-06	0.00E+00

Zeroes in this table indicates that no radioactivity was present at detectable levels.
See Table 1-4 for typical minimum detectable concentrations.

Table 1-2C
Joseph M Farley Nuclear Plant
RADIOACTIVE EFFLUENT RELEASE REPORT - 2010
Liquid Effluents
Unit: Site
Starting: 1-Jan- 2010 Ending: 31-Dec-2010

		Batch Mode			
Nuclides Released	**Units**	**1ST Quarter**	**2ND Quarter**	**3RD Quarter**	**4TH Quarter**
Sn-117M	Curies	0.00E+00	5.04E-06	3.68E-06	2.67E-06
Te-125M	Curies	0.00E+00	7.19E-03	8.76E-03	3.68E-02
Te-129M	Curies	0.00E+00	0.00E+00	0.00E+00	6.95E-05
Total For Period	**Curies**	**5.33E-03**	**2.13E-02**	**1.46E-02**	**5.52E-02**
Tritium					
H-3	Curies	4.24E+02	1.89E+02	3.37E+02	8.39E+01
Dissolved And Entrained Gases					
Ar-41	Curies	9.04E-06	4.40E-06	0.00E+00	1.36E-06
Kr-85M	Curies	4.55E-07	0.00E+00	4.49E-07	0.00E+00
Xe-133	Curies	1.05E-03	1.99E-04	4.24E-03	8.64E-04
Xe-135	Curies	1.02E-06	0.00E+00	1.45E-06	2.78E-06
Xe-131M	Curies	0.00E+00	0.00E+00	1.58E-05	0.00E+00
Xe-133M	Curies	2.63E-06	0.00E+00	0.00E+00	0.00E+00
Xe-135M	Curies	8.41E-06	0.00E+00	0.00E+00	0.00E+00
Total For Period	**Curies**	**1.07E-03**	**2.03E-04**	**4.26E-03**	**8.68E-04**

Zeroes in this table indicates that no radioactivity was present at detectable levels.
See Table 1-4 for typical minimum detectable concentrations.

Table 1-3A
Joseph M Farley Nuclear Plant

RADIOACTIVE EFFLUENT RELEASE REPORT - 2010
Doses to a member of the public due to Liquid Releases
Unit: 1
Starting: 1-Jan- 2010 Ending: 31-Dec-2010

Cumulative Doses Per Quarter

Organ	ODCM Lmt	Units	1ST Qtr	% ODCM	2ND Qtr	% ODCM	3RD Qtr	% ODCM	4TH Qtr	% ODCM
Bone	5.00E+00	mRem	2.61E-03	5.21E-02	1.12E-03	2.25E-02	4.81E-04	9.61E-03	1.15E-02	2.30E-01
GI-Lli	5.00E+00	mRem	3.33E-03	6.67E-02	5.83E-03	1.17E-01	4.18E-03	8.36E-02	4.76E-02	9.51E-01
Kidney	5.00E+00	mRem	2.61E-03	5.23E-02	5.10E-03	1.02E-01	3.97E-03	7.94E-02	4.64E-02	9.28E-01
Liver	5.00E+00	mRem	2.71E-03	5.42E-02	2.50E-03	5.00E-02	2.68E-03	5.36E-02	4.56E-03	9.13E-02
Lung	5.00E+00	mRem	2.97E-03	5.94E-02	2.62E-03	5.25E-02	3.14E-03	6.28E-02	2.98E-03	5.97E-02
Thyroid	5.00E+00	mRem	2.59E-03	5.18E-02	2.18E-03	4.36E-02	2.54E-03	5.08E-02	3.67E-03	7.33E-02
Total Body	5.00E+00	mRem	2.76E-03	5.53E-02	2.19E-03	4.38E-02	2.56E-03	5.12E-02	1.98E-03	3.96E-02
Total Body	1.50E+00	mRem	2.76E-03	1.84E-01	2.19E-03	1.46E-01	2.56E-03	1.71E-01	1.98E-03	1.32E-01

Cumulative Doses per Year

Organ	ODCM Lmt	Units	Year to Ending Date	% ODCM	Receptor	Limit
Bone	1.00E+01	mRem	1.57E-02	1.57E-01	Maximum Individual Liquid	Liquid Effluent Organ Annual
GI-Lli	1.00E+01	mRem	6.09E-02	6.09E-01	Maximum Individual Liquid	Liquid Effluent Organ Annual
Kidney	1.00E+01	mRem	5.81E-02	5.81E-01	Maximum Individual Liquid	Liquid Effluent Organ Annual
Liver	1.00E+01	mRem	1.25E-02	1.25E-01	Maximum Individual Liquid	Liquid Effluent Organ Annual
Lung	1.00E+01	mRem	1.17E-02	1.17E-01	Maximum Individual Liquid	Liquid Effluent Organ Annual
Thyroid	1.00E+01	mRem	1.10E-02	1.10E-01	Maximum Individual Liquid	Liquid Effluent Organ Annual
Total Body	1.00E+01	mRem	9.49E-03	9.49E-02	Maximum Individual Liquid	Liquid Effluent Organ Annual
Total Body	3.00E+00	mRem	9.49E-03	3.16E-01	Maximum Individual Liquid	Liquid Effluent TB Annual

Table 1-3B
Joseph M Farley Nuclear Plant
RADIOACTIVE EFFLUENT RELEASE REPORT - 2010
Doses to a member of the public due to Liquid Releases
Unit: 2
Starting: 1-Jan- 2010 Ending: 31-Dec-2010

Cumulative Doses Per Quarter

Organ	ODCM Lmt	Units	1ST Qtr	% ODCM	2ND Qtr	% ODCM	3RD Qtr	% ODCM	4TH Qtr	% ODCM
Bone	5.00E+00	mRem	2.69E-03	5.38E-02	2.88E-03	5.76E-02	2.94E-03	5.87E-02	4.28E-03	8.56E-02
GI-Lli	5.00E+00	mRem	3.46E-03	6.93E-02	1.10E-02	2.21E-01	1.23E-02	2.46E-01	1.80E-02	3.59E-01
Kidney	5.00E+00	mRem	2.29E-03	4.59E-02	9.05E-03	1.81E-01	1.15E-02	2.29E-01	1.68E-02	3.36E-01
Liver	5.00E+00	mRem	2.49E-03	4.98E-02	1.89E-03	3.79E-02	2.46E-03	4.92E-02	2.43E-03	4.86E-02
Lung	5.00E+00	mRem	6.25E-03	1.25E-01	4.63E-03	9.26E-02	9.93E-03	1.99E-01	7.23E-03	1.45E-01
Thyroid	5.00E+00	mRem	2.20E-03	4.40E-02	1.04E-03	2.07E-02	1.87E-03	3.74E-02	1.83E-03	3.66E-02
Total Body	5.00E+00	mRem	2.53E-03	5.06E-02	1.05E-03	2.10E-02	1.75E-03	3.50E-02	1.44E-03	2.89E-02
Total Body	1.50E+00	mRem	2.53E-03	1.69E-01	1.05E-03	6.99E-02	1.75E-03	1.17E-01	1.44E-03	9.63E-02

Cumulative Doses per Year

Organ	ODCM Lmt	Units	Year to Ending Date	% ODCM	Receptor	Limit
Bone	1.00E+01	mRem	1.28E-02	1.28E-01	Maximum Individual Liquid	Liquid Effluent Organ Annual
GI-Lli	1.00E+01	mRem	4.48E-02	4.48E-01	Maximum Individual Liquid	Liquid Effluent Organ Annual
Kidney	1.00E+01	mRem	3.96E-02	3.96E-01	Maximum Individual Liquid	Liquid Effluent Organ Annual
Liver	1.00E+01	mRem	9.27E-03	9.27E-02	Maximum Individual Liquid	Liquid Effluent Organ Annual
Lung	1.00E+01	mRem	2.80E-02	2.80E-01	Maximum Individual Liquid	Liquid Effluent Organ Annual
Thyroid	1.00E+01	mRem	6.94E-03	6.94E-02	Maximum Individual Liquid	Liquid Effluent Organ Annual
Total Body	1.00E+01	mRem	6.77E-03	6.77E-02	Maximum Individual Liquid	Liquid Effluent Organ Annual
Total Body	3.00E+00	mRem	6.77E-03	2.26E-01	Maximum Individual Liquid	Liquid Effluent TB Annual

TABLE 1-4
Joseph M. Farley Nuclear Plant
ANNUAL RADIOACTIVE EFFLUENT RELEASE REPORT - 2010
MINIMUM DETECTABLE CONCENTRATION - LIQUID SAMPLE ANALYSES

The values in this table represent a priori Minimum Detectable Concentrations (MDC) that are typically achieved in laboratory analyses of liquid radwaste samples.

Nuclide	MDC(uCi/ML)
MN-54	4.01E-08
CO-58	3.12E-08
FE-59	9.04E-08
CO-60	1.76E-08
ZN-65	1.19E-07
MO-99	2.98E-07
I-131	3.05E-08
CS-134	4.01E-08
CS-137	3.84E-08
CE-141	4.21E-08
CE-144	1.51E-07

Table 1-5A
Joseph M Farley Nuclear Plant
RADIOACTIVE EFFLUENT RELEASE REPORT - 2010
Liquid Effluents - Batch Release Summary
Unit: 1
Starting: 1-Jan- 2010 Ending: 31-Dec-2010

Liquid Releases	Units	1ST Quarter	2ND Quarter	3RD Quarter	4TH Quarter	Year Totals
1. Number of batch releases		79	76	92	85	332
2. Total time period for Batch releases	(Minutes)	1.00E+04	9.57E+03	1.23E+04	1.05E+04	4.24E+04
3. Maximum time period for a batch release	(Minutes)	1.50E+02	1.40E+02	1.93E+02	1.45E+02	1.93E+02
4. Average time period for a batch release	(Minutes)	1.27E+02	1.26E+02	1.34E+02	1.23E+02	1.28E+02
5. Minimum time period for a batch release	(Minutes)	1.05E+02	8.40E+01	1.03E+02	1.02E+02	8.40E+01
6. Average stream flow during periods of release of liquid effluent into a flowing stream *	(CFS)	6.66E+05	2.54E+05	8.47E+04	1.16E+05	2.78E+05

Average River Flow Rate, taken at Walter F. George Lock and Dam, located 30.7 miles above Farley Nuclear Plant.

Table 1-5B
Joseph M Farley Nuclear Plant
RADIOACTIVE EFFLUENT RELEASE REPORT - 2010
Liquid Effluents - Batch Release Summary
Unit: 2
Starting: 1-Jan- 2010 Ending: 31-Dec-2010

Liquid Releases	Units	1ST Quarter	2ND Quarter	3RD Quarter	4TH Quarter	Year Totals
1. Number of batch releases		109	73	95	98	375
2. Total time period for Batch releases	(Minutes)	1.19E+04	8.02E+03	1.05E+04	9.93E+03	4.04E+04
3. Maximum time period for a batch release	(Minutes)	1.80E+02	1.61E+02	1.44E+02	1.31E+02	1.80E+02
4. Average time period for a batch release	(Minutes)	1.10E+02	1.10E+02	1.10E+02	1.01E+02	1.08E+02
5. Minimum time period for a batch release	(Minutes)	7.80E+01	2.00E+00	9.00E+01	7.50E+01	2.00E+00
6. Average stream flow during periods of release of liquid effluent into a flowing stream *	(CFS)	6.66E+05	2.54E+05	8.47E+04	1.16E+05	2.78E+05

Average River Flow Rate, taken at Walter F. George Lock and Dam, located 30.7 miles above Farley Nuclear Plant.

Table 1-6A
Joseph M Farley Nuclear Plant
RADIOACTIVE EFFLUENT RELEASE REPORT - 2010
Liquid Effluents - Abnormal Release Summary
Unit: 1
Starting: 1-Jan- 2010 Ending: 31-Dec-2010

Liquid Releases	Units	1ST Quarter	2ND Quarter	3RD Quarter	4TH Quarter	Year Totals
1. Number of Releases		0	0	0	0	0
2. Total Time For All Releases	(Minutes)	0.00E+00	0.00E+00	0.00E+00	0.00E+00	0.00E+00
3. Maximum Time For A Release	(Minutes)	0.00E+00	0.00E+00	0.00E+00	0.00E+00	0.00E+00
4. Average Time For A Release	(Minutes)	0.00E+00	0.00E+00	0.00E+00	0.00E+00	0.00E+00
5. Minimum Time For A Release	(Minutes)	0.00E+00	0.00E+00	0.00E+00	0.00E+00	0.00E+00
6. Total activity for all releases	(Curies)	0.00E+00	0.00E+00	0.00E+00	0.00E+00	0.00E+00

Table 1-6B
Joseph M Farley Nuclear Plant
RADIOACTIVE EFFLUENT RELEASE REPORT - 2010
Liquid Effluents - Abnormal Release Summary
Unit: 2
Starting: 1-Jan- 2010 Ending: 31-Dec-2010

Liquid Releases	Units	1ST Quarter	2ND Quarter	3RD Quarter	4TH Quarter	Year Totals
1. Number of Releases		0	0	0	0	0
2. Total Time For All Releases	(Minutes)	0.00E+00	0.00E+00	0.00E+00	0.00E+00	0.00E+00
3. Maximum Time For A Release	(Minutes)	0.00E+00	0.00E+00	0.00E+00	0.00E+00	0.00E+00
4. Average Time For A Release	(Minutes)	0.00E+00	0.00E+00	0.00E+00	0.00E+00	0.00E+00
5. Minimum Time For A Release	(Minutes)	0.00E+00	0.00E+00	0.00E+00	0.00E+00	0.00E+00
6. Total activity for all releases	(Curies)	0.00E+00	0.00E+00	0.00E+00	0.00E+00	0.00E+00

2.0 GASEOUS EFFLUENTS

This section contains applicable ODCM limits for gaseous effluents as well as the quantities of radioactive gaseous effluents released during 2010. These quantities are summarized on a quarterly basis and include any unplanned releases. Tabulations are provided of the offsite air doses calculated in accordance with ODCM 3.4.2 to show conformance with the limits of ODCM 3.1.3, and the offsite organ doses to a member of the public calculated in accordance with ODCM 3.4.3 to show conformance with ODCM 3.1.4.

2.1 Regulatory Requirements

The requirements presented in this section are for Unit 1 and Unit 2.

2.1.1 Dose Rate Limits

The dose rates due to radioactive materials released in gaseous effluents from the site to areas at and beyond the SITE BOUNDARY shall be limited to the following:

a. For noble gases: Less than or equal to 500 mrem/yr. to the whole body and less than or equal to
   3000 mrem/yr. to the skin, and

b. For Iodine-131, Iodine-133,tritium and for all radionuclides in particulate form with half-lives greater than 8 days: Less than or equal to 1500 mrem/yr. to any organ.

2.1.2 Air Doses Due to Noble Gases in Gaseous Releases

Technical Specifications 5.5.4.e and 5.5.4.h state that the air dose due to noble gases released in gaseous effluents, from each reactor unit, to areas at and beyond the SITE BOUNDARY (see ODCM Figure 10-1) shall be limited to the following:

a. During any calendar quarter: Less than or equal to 5 mrad for gamma radiation and less than or equal to 10 mrad for beta radiation, and

b. During any calendar year: Less than or equal to 10 mrad for gamma radiation and less than or equal to 20 mrad for beta radiation.

2.1.3 Doses to a Member of the Public

Technical Specifications 5.5.4.e and 5.5.4.i state that the dose to a MEMBER OF THE PUBLIC from I-131, I-133, tritium, and all radionuclides in particulate form with half-lives greater than 8 days in gaseous effluents released, from each reactor unit, to areas at and beyond the SITE BOUNDARY (see ODCM Figure 10-1) shall be limited to the following:

a. During any calendar quarter: Less than or equal to 7.5 mrem to any organ, and

b. During any calendar year: Less than or equal to 15 mrem to any organ.

2.2 Measurements and Approximation of Total Radioactivity

The following noble gases are considered in evaluating gaseous effluents:

KR-87	XE-133
KR-88	XE-135
XE-133M	XE-138

The following radioiodines and radioactive materials in particulate form are specifically considered in evaluating gaseous effluents:

MN-54	MO-99
FE-59	I-131
CO-58	CS-134
CO-60	CS-137
ZN-65	CE-141
SR-89	CE-144
SR-90	H-3

2.2.1 Sample collection and Analysis

Periodic grab samples from plant effluent streams are analyzed by a computerized pulse height analyzer system utilizing high resolution germanium detectors. Samples are obtained and analyzed in accordance with ODCM Table 3-3. Isotopic values thus obtained are used for release rate calculations as specified in ODCM 3.4.2 and ODCM 3.4.3. Only those nuclides which are detected are used in calculations. For radioiodines and particulates, in addition to the nuclides listed above other nuclides with half-lives greater than 8 days which are identified are also considered.

Continuous Releases: Continuous sampling is performed on the continuous release points (i.e. the Plant Vent Stack, Containment Purge when in continuous mode, and the Turbine Building Vent). Particulate material is collected by filtration. Periodically these filters are removed and analyzed on the pulse height analyzer to identify and quantify radioactive materials collected on the filters. Particulate filters are then analyzed for gross alpha and strontium as required. All gross alpha, Sr-89 and SR-90 samples are sent offsite to the Georgia Power Environmental Laboratory for analysis.

Batch Releases: The processing of batch type releases (from Containment when in batch mode, or Waste Gas Decay Tanks) is analogous to continuous releases, except that the release is not commenced until samples have been obtained and analyzed. Containment Purge batch releases were commenced at FNP beginning in 2006 in order to take advantage of additional decay time for short lived radionuclides.

Typically achieved minimum detectable concentrations for gaseous effluent sample analyses are reported in Table 2-6.

2.2.2 Total Quantities of Radioactivity, Dose Rates, and Cumulative Doses

The methods for determining release quantities of radioactivity, dose rates, and cumulative doses follow:

2.2.2.1 Fission and Activation Gases

The released radioactivity is determined using sample analyses results collected as described in section 2.2.1 and the average release flow rates over the period represented by the collected sample.

Dose rates due to noble gases, radioiodines, tritium, and particulates are calculated (with computer assistance). The calculated dose rates are compared to the dose rate limits specified in ODCM 3.1.2 for noble gases, radioiodine, tritium, and particulates. Dose rate calculation methodology is presented in the ODCM.

Beta and gamma air doses due to noble gases are calculated for the location in the unrestricted area with the potential for the highest exposure due to gaseous releases. Air doses are calculated for each release period and cumulative totals are kept for each unit for the calendar quarter and year. Cumulative air doses are compared to the dose limits specified in ODCM 3.1.3. The current percent of the ODCM limits are shown on the printout for each release period. Air dose calculation methodology is presented in the ODCM.

2.2.2.2 Radioiodine, Tritium, and Particulate Releases

Released quantities of radioiodines are determined using the weekly samples and release flow rates for the applicable release points. Radioiodine concentrations are determined by gamma spectroscopy.

Release quantities of particulates are determined using the weekly (filter) samples and release flow rates for the applicable release points. Gamma spectroscopy is used to quantify the concentrations of principal gamma emitters.

After each quarter, the particulate filters from each applicable vent (plant vent stack and containment purge) are combined, fused, and a strontium separation is performed. Since sample flows and vent flows are almost constant over each quarterly period the filters from each vent can be dissolved together. Decay corrections are performed back to the middle of the quarterly collection period. If Sr-89 or Sr-90 is not detected, MDC's are calculated. Strontium concentrations are input into the composite file of the computer and used for release dose rate and individual dose calculations.

Tritium samples are obtained monthly from the Plant Vent Stack, the Containment Purge when in batch mode, and the Turbine Building Vent (and weekly for Containment Purge when in continuous mode) by passing the sample stream through a cold trap or by using the bubble method. The grams of water vapor/cubic meter is measured upstream of the cold trap in order to alleviate the difficulties in determining water vapor collection efficiencies. The tritium samples are analyzed onsite and the results furnished in uCi/ml of water. The tritium concentration in water is converted to the tritium concentration in air and this value is input into the composite file of the computer and used in release, dose rate,and individual dose calculations.

Dose rates due to radioiodine, tritium and particulates are calculated for a hypothetical child exposed to the inhalation pathway at the location in the unrestricted area where the potential dose rate is expected to be the highest. Dose rates are calculated, for each release point for each release period, and the dose rates from each release point is compared to the dose rate limits specified in ODCM 3.1.2, allocated for each release point as described in ODCM 3.3.2.

Doses to a Member of the Public (individual doses) due to radioiodine, tritium and particulates are calculated for the controlling receptor, which is described in the ODCM. Individual doses are calculated for each release period, and cumulative totals are kept for each unit, for the current calendar quarter and year. Cumulative individual doses are compared to the dose limits specified in ODCM 3.1.4. The current percent of ODCM limits are shown on the printout for each release period.

2.2.2.3 Gross Alpha Release

The gross alpha release is computed each month by counting the particulate filters, for each week for gross alpha activity in a proportional counter. The highest concentration calculated for any of these weeks is used for the monthly value. This value is input into the composite file of the computer and used for release calculations.

2.2.3 Total Error Estimation

The maximum errors associated with monitor readings, sample flow, vent flow, sample collection, monitor calibration and laboratory procedure are collectively estimated to be:

Fission and Activation Gases	Iodine	Particulates	Tritium
75%	60%	50%	45%

The average error associated with counting is estimated to be:

Fission and Activation Gases	Iodine	Particulates	Tritium
19%	28%	20%	8%

2.3 Gaseous Effluent Release Data

Regulatory Guide 1.21 Tables 1A, 1B and 1C are found in this report as Tables 2-1A, 2-1B, 2-1C, 2-2A, 2-2B, 2-2C, 2-3A, 2-3B, and 2-3C. Data are presented on a quarterly basis as required by Regulatory Guide 1.21.

To complete Tables 2-1A and 2-1B, the total release for each of the four categories (fission and activation gases, radioiodines, particulates and tritium) was divided by the number of seconds in the quarter to obtain a release rate in uCi/second for each category. However, the percent of the ODCM limits are not applicable because FNP has no curie limit for gaseous releases. Applicable limits are expressed in terms of dose. Noble gases are limited as specified in ODCM 3.1.2. The other three categories (tritium, radioiodines, and particulates) are limited as a group as specified in ODCM 3.1.2.

Dose rates due to noble gas releases and due to radioiodines, tritium and particulate releases were calculated as part of the pre-release and post-release permits. No limits were exceeded for this reporting period.

Gross alpha radioactivity is reported in Tables 2-1A, 2-1B and 2-1C as curies released in each quarter.

Limits for cumulative beta and gamma air doses due to noble gases are presented in Tables 2-4A and 2-4B along with the percent of ODCM limits.

Limits for cumulative doses to an individual due to radioiodines, tritium and particulates are specified in ODCM 3.1.4. Cumulative individual doses are presented in Tables 2-5A and 2-5B along with percent of ODCM limits.

2.4 Radiological Impact Due to Gaseous Releases

The air doses due to noble gases and doses to a Member of the Public due to radioiodines, tritium and particulates in gaseous effluents for Units 1 and 2 are provided in the following tables in order to show conformance with the limits of ODCM 3.1.3 and ODCM 3.1.4:

Unit 1 2010 Air Doses Due to Noble Gases in Gaseous Releases: Table 2-4A

Unit 2 2010 Air Doses Due to Noble Gases in Gaseous Releases: Table 2-4B

Unit 1 2010 Doses to a Member of the Public Due to Radioiodines, Tritium, and Particulates in Gaseous Releases: Table 2-5A

Unit 2 2010 Doses to a Member of the Public Due to Radioiodines, Tritium, and Particulates in Gaseous Releases: Table 2-5B

2.5 Gaseous Effluents - Batch Releases

Batch release information for Units 1 and 2 is summarized in the following tables:

Unit 1 2010 Gaseous Effluents - Batch Release Summary: Table 2-7A

Unit 2 2010 Gaseous Effluents - Batch Release Summary: Table 2-7B

2.6 Gaseous Effluents - Abnormal Releases

There were no abnormal releases on Unit 1 or Unit 2 during 2010.

Abnormal release information for Units 1 and 2 is summarized in the following tables:

Unit 1 2010 Gaseous Effluents - Abnormal Release Summary: Table 2-8A
Unit 2 2010 Gaseous Effluents - Abnormal Release Summary: Table 2-8B

Table 2-1A
Joseph M Farley Nuclear Plant
RADIOACTIVE EFFLUENT RELEASE REPORT - 2010
Gaseous Effluents - Summation Of All Releases
Unit: 1
Starting: 1-Jan- 2010 Ending: 31-Dec-2010

Type of Effluent	Units	1ST Quarter	2ND Quarter	3RD Quarter	4TH Quarter
A. Fission And Activation Gases					
1. Total Release	Curies	6.39E+00	2.65E+01	7.43E+00	1.94E+00
2. Average Release rate for period	uCi/sec	8.10E-01	3.36E+00	9.42E-01	2.46E-01
3. Percent of Applicable Limit	%	*	*	*	*
B. Radioiodines					
1. Total Iodine-131	Curies	1.03E-04	1.69E-05	1.10E-05	1.77E-05
2. Average Release rate for period	uCi/sec	1.30E-05	2.14E-06	1.39E-06	2.25E-06
3. Percent of Applicable Limit	%	*	*	*	*
C. Particulates					
1. Particulates (Half-Lives > 8 Days)	Curies	1.96E-06	1.66E-07	5.04E-09	2.72E-06
2. Average Release rate for period	uCi/sec	2.49E-07	2.11E-08	6.39E-10	3.45E-07
3. Percent of Applicable Limit	%	*	*	*	*
D. Tritium					
1. Total Release	Curies	2.35E+01	3.15E+01	9.11E+00	2.72E+00
2. Average Release rate for period	uCi/sec	2.98E+00	3.99E+00	1.16E+00	3.45E-01
3. Percent of Applicable Limit	%	*	*	*	*
E. Gross Alpha					
1. Total Release	Curies	0.00E+00	0.00E+00	0.00E+00	0.00E+00
2. Average Release rate for period	uCi/sec	0.00E+00	0.00E+00	0.00E+00	0.00E+00

Table 2-1B
Joseph M Farley Nuclear Plant
RADIOACTIVE EFFLUENT RELEASE REPORT - 2010
Gaseous Effluents - Summation Of All Releases
Unit: 2
Starting: 1-Jan- 2010 Ending: 31-Dec-2010

Type of Effluent	Units	1ST Quarter	2ND Quarter	3RD Quarter	4TH Quarter
A. Fission And Activation Gases					
1. Total Release	Curies	1.59E+00	3.62E+00	3.13E+00	2.65E-01
2. Average Release rate for period	uCi/sec	2.02E-01	4.60E-01	3.97E-01	3.36E-02
3. Percent of Applicable Limit	%	*	*	*	*
B. Radioiodines					
1. Total Iodine-131	Curies	0.00E+00	3.11E-08	0.00E+00	2.82E-09
2. Average Release rate for period	uCi/sec	0.00E+00	3.95E-09	0.00E+00	3.58E-10
3. Percent of Applicable Limit	%	*	*	*	*
C. Particulates					
1. Particulates (Half-Lives > 8 Days)	Curies	1.34E-08	9.46E-07	2.89E-08	0.00E+00
2. Average Release rate for period	uCi/sec	1.70E-09	1.20E-07	3.66E-09	0.000E+00
3. Percent of Applicable Limit	%	*	*	*	*
D. Tritium					
1. Total Release	Curies	2.56E+00	1.15E+01	2.72E+01	3.40E+00
2. Average Release rate for period	uCi/sec	3.24E-01	1.45E+00	3.46E+00	4.32E-01
3. Percent of Applicable Limit	%	*	*	*	*
E. Gross Alpha					
1. Total Release	Curies	1.11E-08	0.00E+00	0.00E+00	0.00E+00
2. Average Release rate for period	uCi/sec	1.40E-09	0.00E+00	0.00E+00	0.00E+00

*Applicable limits are expressed in terms of dose. See Tables 2-4A, 2-4B, 2-5A, 2-5B of this report.

Table 2-1C
Joseph M Farley Nuclear Plant
RADIOACTIVE EFFLUENT RELEASE REPORT - 2010
Gaseous Effluents - Summation Of All Releases
Unit: Site
Starting: 1-Jan- 2010 Ending: 31-Dec-2010

Type of Effluent	Units	1ST Quarter	2ND Quarter	3RD Quarter	4TH Quarter
A. Fission And Activation Gases					
1. Total Release	Curies	7.97E+00	3.01E+01	1.06E+01	2.21E+00
2. Average Release rate for period	uCi/sec	1.01E+00	3.82E+00	1.34E+00	2.80E-01
3. Percent of Applicable Limit	%	*	*	*	*
B. Radioiodines					
1. Total Iodine-131	Curies	1.03E-04	1.69E-05	1.10E-05	1.77E-05
2. Average Release rate for period	uCi/sec	1.30E-05	2.15E-06	1.39E-06	2.25E-06
3. Percent of Applicable Limit	%	*	*	*	*
C. Particulates					
1. Particulates (Half-Lives > 8 Days)	Curies	1.98E-06	1.11E-06	3.39E-08	2.72E-06
2. Average Release rate for period	uCi/sec	2.51E-07	1.41E-07	4.30E-09	3.45E-07
3. Percent of Applicable Limit	%	*	*	*	*
D. Tritium					
1. Total Release	Curies	2.61E+01	4.29E+01	3.64E+01	6.12E+00
2. Average Release rate for period	uCi/sec	3.31E+00	5.44E+00	4.61E+00	7.77E-01
3. Percent of Applicable Limit	%	*	*	*	*
E. Gross Alpha					
1. Total Release	Curies	1.11E-08	0.00E+00	0.00E+00	0.00E+00
2. Average Release rate for period	uCi/sec	1.40E-09	0.00E+00	0.00E+00	0.00E+00

* Applicable limits are expressed in terms of dose. See Tables 2-4A, 2-4B, 2-5A, 2-5B of this report.

Table 2-2A
Joseph M Farley Nuclear Plant
RADIOACTIVE EFFLUENT RELEASE REPORT - 2010
Gaseous Effluents - Mixed Mode Level Releases
Unit: 1
Starting: 1-Jan- 2010 Ending: 31-Dec-2010

		Continuous Mode			
Nuclides Released	**Units**	**1ST Quarter**	**2ND Quarter**	**3RD Quarter**	**4TH Quarter**
Fission Gases					
Ar-41	Curies	4.74E+00	2.26E+01	7.06E+00	1.79E+00
Xe-133	Curies	1.12E+00	3.45E-01	2.37E-01	3.28E-03
Xe-135	Curies	8.46E-02	3.59E+00	1.26E-01	2.16E-04
Total For Period	**Curies**	**5.94E+00**	**2.65E+01**	**7.43E+00**	**1.79E+00**
Iodines					
I-131	Curies	1.03E-04	1.69E-05	1.10E-05	1.77E-05
I-133	Curies	4.16E-04	9.45E-05	5.98E-05	1.60E-06
I-135	Curies	3.59E-04	8.22E-07	7.89E-07	0.00E+00
Total For Period	**Curies**	**8.77E-04**	**1.12E-04**	**7.16E-05**	**1.93E-05**

If Not Detected, Nuclide is Not Reported. Zeroes in this table indicates that no radioactivity was present at detectable levels.
See Table 2-6 for typical minimum detectable concentrations.

Table 2-2A
Joseph M Farley Nuclear Plant
RADIOACTIVE EFFLUENT RELEASE REPORT - 2010
Gaseous Effluents - Mixed Mode Level Releases
Unit: 1
Starting: 1-Jan- 2010 Ending: 31-Dec-2010

		Continuous Mode			
Nuclides Released	**Unit**	**1ST Quarter**	**2ND Quarter**	**3RD Quarter**	**4TH Quarter**
Particulates					
Be-7	Curies	6.83E-07	0.00E+00	0.00E+00	0.00E+00
Mn-54	Curies	0.00E+00	0.00E+00	0.00E+00	1.89E-08
Co-58	Curies	9.36E-07	2.79E-09	2.79E-09	6.86E-08
Co-60	Curies	3.33E-07	8.68E-10	2.24E-09	1.43E-07
Zn-65	Curies	1.42E-09	0.00E+00	0.00E+00	0.00E+00
Rb-86	Curies	0.00E+00	0.00E+00	0.00E+00	1.63E-07
Sr-89	Curies	9.51E-09	1.63E-07	0.00E+00	0.00E+00
Sr-90	Curies	0.00E+00	0.00E+00	0.00E+00	6.39E-09
Zr-95	Curies	0.00E+00	0.00E+00	0.00E+00	8.90E-07
Nb-95	Curies	0.00E+00	0.00E+00	0.00E+00	1.08E-06
Cs-137	Curies	0.00E+00	0.00E+00	0.00E+00	4.27E-08
Eu-155	Curies	0.00E+00	0.00E+00	0.00E+00	2.95E-07
Total For Period	**Curies**	**1.96E-06**	**1.66E-07**	**5.04E-09**	**2.71E-06**
Tritium					
H-3	Curies	2.17E+01	3.15E+01	9.11E+00	2.72E+00
Gross Alpha					
No Nuclides Found	Curies	0.00E+00	0.00E+00	0.00E+00	0.00E+00

If Not Detected, Nuclide is Not Reported. Zeroes in this table indicates that no radioactivity was present at detectable levels.
See Table 2-6 for typical minimum detectable concentrations.

Table 2-2A
Joseph M Farley Nuclear Plant
RADIOACTIVE EFFLUENT RELEASE REPORT - 2010
Gaseous Effluents - Mixed Mode Level Releases
Unit: 1
Starting: 1-Jan- 2010 Ending: 31-Dec-2010

		Batch Mode			
Nuclides Released	**Units**	**1ST Quarter**	**2ND Quarter**	**3RD Quarter**	**4TH Quarter**
Fission Gases					
Ar-41	Curies	3.29E-01	0.00E+00	4.42E-04	6.20E-02
Xe-131M	Curies	0.00E+00	0.00E+00	0.00E+00	1.58E-03
Xe-133	Curies	1.07E-01	0.00E+00	0.00E+00	8.59E-02
Xe-135M	Curies	0.00E+00	0.00E+00	0.00E+00	5.41E-05
Xe-135	Curies	7.58E-03	0.00E+00	1.11E-05	0.00E+00
Total For Period	**Curies**	**4.44E-01**	**0.00E+00**	**4.53E-04**	**1.49E-01**
Iodines					
I-131	Curies	0.00E+00	0.00E+00	0.00E+00	5.04E-08
Total For Period	**Curies**	**0.00E+00**	**0.00E+00**	**0.00E+00**	**5.04E-08**
Particulates					
Co-58	Curies	0.00E+00	0.00E+00	0.00E+00	7.13E-09
Co-60	Curies	0.00E+00	0.00E+00	0.00E+00	3.11E-09
Total For Period	**Curies**	**0.00E+00**	**0.00E+00**	**0.00E+00**	**1.02E-08**
Tritium					
H-3	Curies	1.81E+00	0.00E+00	0.00E+00	1.38E-03
Gross Alpha					
No Nuclides Found	Curies	0.00E+00	0.00E+00	0.00E+00	0.00E+00

If Not Detected, Nuclide is Not Reported. Zeroes in this table indicates that no radioactivity was present at detectable levels.
See Table 2-6 for typical minimum detectable concentrations.

Table 2-2B
Joseph M Farley Nuclear Plant
RADIOACTIVE EFFLUENT RELEASE REPORT - 2010
Gaseous Effluents - Mixed Mode Level Releases
Unit: 2
Starting: 1-Jan- 2010 Ending: 31-Dec-2010

		Continuous Mode			
Nuclides Released	**Units**	**1ST Quarter**	**2ND Quarter**	**3RD Quarter**	**4TH Quarter**
Fission Gases					
Ar-41	Curies	1.12E+00	3.59E+00	2.97E+00	0.00E+00
Total For Period	**Curies**	**1.12E+00**	**3.59E+00**	**2.97E+00**	**0.00E+00**
Iodines					
I-131	Curies	0.00E+00	7.32E-09	0.00E+00	0.00E+00
I-133	Curies	0.00E+00	2.62E-08	0.00E+00	0.00E+00
Total For Period	**Curies**	**0.00E+00**	**3.35E-08**	**0.00E+00**	**0.00E+00**
Particulates					
Cr-51	Curies	0.00E+00	1.95E-07	0.00E+00	0.00E+00
Mn-54	Curies	0.00E+00	1.03E-07	0.00E+00	0.00E+00
Fe-59	Curies	0.00E+00	3.66E-08	0.00E+00	0.00E+00
Co-58	Curies	0.00E+00	1.12E-07	0.00E+00	0.00E+00
Co-60	Curies	0.00E+00	1.08E-07	0.00E+00	0.00E+00
Sr-89	Curies	1.34E-08	3.90E-07	0.00E+00	0.00E+00
Sr-90	Curies	0.00E+00	1.86E-09	2.89E-08	0.00E+00
Total For Period	**Curies**	**1.34E-08**	**9.46E-07**	**2.89E-08**	**0.00E+00**
Tritium					
H-3	Curies	2.54E+00	1.15E+01	2.66E+01	1.63E+00
Gross Alpha					
G-Alpha	Curies	1.11E-08	0.00E+00	0.00E+00	0.00E+00
Total For Period	**Curies**	**1.11E-08**	**0.00E+00**	**0.00E+00**	**0.00E+00**

If Not Detected, Nuclide is Not Reported. Zeroes See Table 2-6 for typical minimum detectable concentrations.
in this table indicates that no radioactivity was present at detectable levels.

Table 2-2B
Joseph M Farley Nuclear Plant
RADIOACTIVE EFFLUENT RELEASE REPORT - 2010
Gaseous Effluents - Mixed Mode Level Releases
Unit: 2
Starting: 1-Jan- 2010 Ending: 31-Dec-2010

		Batch Mode			
Nuclides Released	**Units**	**1ST Quarter**	**2ND Quarter**	**3RD Quarter**	**4TH Quarter**
Fission Gases					
Ar-41	Curies	4.68E-01	2.48E-04	1.65E-01	2.65E-01
Xe-133M	Curies	0.00E+00	4.16E-04	0.00E+00	0.00E+00
Xe-133	Curies	1.67E-03	3.20E-02	0.00E+00	0.00E+00
Xe-135	Curies	0.00E+00	5.27E-05	0.00E+00	0.00E+00
Xe-127	Curies	0.00E+00	0.00E+00	0.00E+00	7.37E-05
Total For Period	**Curies**	**4.70E-01**	**3.27E-02**	**1.65E-01**	**2.65E-01**
Iodines					
I-131	Curies	0.00E+00	2.38E-08	0.00E+00	2.82E-09
Total For Period	**Curies**	**0.00E+00**	**2.38E-08**	**0.00E+00**	**2.82E-09**
Particulates					
No Nuclides Found	Curies	0.00E+00	0.00E+00	0.00E+00	0.00E+00
Tritium					
H-3	Curies	1.84E-02	0.00E+00	6.40E-01	1.77E+00
Gross Alpha					
No Nuclides Found	Curies	0.00E+00	0.00E+00	0.00E+00	0.00E+00

If Not Detected, Nuclide is Not Reported. Zeroes in this table indicates that no radioactivity was present at detectable levels.
See Table 2-6 for typical minimum detectable concentrations.

Table 2-2C
Joseph M Farley Nuclear Plant
RADIOACTIVE EFFLUENT RELEASE REPORT - 2010
Gaseous Effluents - Mixed Mode Level Releases
Unit: Site
Starting: 1-Jan- 2010 Ending: 31-Dec-2010

		Continuous Mode			
Nuclides Released	**Units**	**1ST Quarter**	**2ND Quarter**	**3RD Quarter**	**4TH Quarter**
Fission Gases					
Ar-41	Curies	5.86E+00	2.62E+01	1.00E+01	1.79E+00
Xe-133	Curies	1.12E+00	3.45E-01	2.37E-01	3.28E-03
Xe-135	Curies	8.46E-02	3.59E+00	1.26E-01	2.16E-04
Total For Period	**Curies**	**7.06E+00**	**3.01E+01**	**1.04E+01**	**1.79E+00**
Iodines					
I-131	Curies	1.03E-04	1.69E-05	1.10E-05	1.77E-05
I-133	Curies	4.16E-04	9.45E-05	5.98E-05	1.60E-06
I-135	Curies	3.59E-04	8.22E-07	7.89E-07	0.00E+00
Total For Period	**Curies**	**8.77E-04**	**1.12E-04**	**7.16E-05**	**1.93E-05**

See Table 2-6 for typical minimum detectable concentrations. If Not Detected, Nuclide is Not Reported. Zeroes in this table indicates that no radioactivity was present at detectable levels.

Table 2-2C
Joseph M Farley Nuclear Plant
RADIOACTIVE EFFLUENT RELEASE REPORT - 2010
Gaseous Effluents - Mixed Mode Level Releases
Unit: Site
Starting: 1-Jan- 2010 Ending: 31-Dec-2010

		Continuous Mode			
Nuclides Released	**Units**	**1ST Quarter**	**2ND Quarter**	**3RD Quarter**	**4TH Quarter**
Particulates					
Be-7	Curies	6.83E-07	0.00E+00	0.00E+00	0.00E+00
Cr-51	Curies	0.00E+00	1.95E-07	0.00E+00	0.00E+00
Mn-54	Curies	0.00E+00	1.03E-07	0.00E+00	1.89E-08
Fe-59	Curies	0.00E+00	3.66E-08	0.00E+00	0.00E+00
Co-58	Curies	9.36E-07	1.15E-07	2.79E-09	6.86E-08
Co-60	Curies	3.33E-07	1.09E-07	2.24E-09	1.43E-07
Zn-65	Curies	1.42E-09	0.00E+00	0.00E+00	0.00E+00
Rb-86	Curies	0.00E+00	0.00E+00	0.00E+00	1.63E-07
Sr-89	Curies	2.29E-08	5.52E-07	0.00E+00	0.00E+00
Sr-90	Curies	0.00E+00	1.86E-09	2.89E-08	6.39E-09
Zr-95	Curies	0.00E+00	0.00E+00	0.00E+00	8.90E-07
Nb-95	Curies	0.00E+00	0.00E+00	0.00E+00	1.08E-06
Cs-137	Curies	0.00E+00	0.00E+00	0.00E+00	4.27E-08
Eu-155	Curies	0.00E+00	0.00E+00	0.00E+00	2.95E-07
Total For Period	**Curies**	**1.98E-06**	**1.11E-06**	**3.39E-08**	**2.71E-06**
Tritium					
H-3	Curies	2.42E+01	4.29E+01	3.57E+01	4.35E+00
Gross Alpha					
G-Alpha	Curies	1.11E-08	0.00E+00	0.00E+00	0.00E+00
Total For Period	**Curies**	**1.11E-08**	**0.00E+00**	**0.00E+00**	**0.00E+00**

If Not Detected, Nuclide is Not Reported. Zeroes in this table indicates that no radioactivity was present at detectable levels.
See Table 2-6 for typical minimum detectable concentrations.

Table 2-2C
Joseph M Farley Nuclear Plant
RADIOACTIVE EFFLUENT RELEASE REPORT - 2010
Gaseous Effluents - Mixed Mode Level Releases
Unit: Site
Starting: 1-Jan- 2010 Ending: 31-Dec-2010

		Batch Mode			
Nuclides Released	**Units**	**1ST Quarter**	**2ND Quarter**	**3RD Quarter**	**4TH Quarter**
Fission Gases					
Ar-41	Curies	7.97E-01	2.48E-04	1.65E-01	3.27E-01
Xe-131M	Curies	0.00E+00	0.00E+00	0.00E+00	1.58E-03
Xe-133M	Curies	0.00E+00	4.16E-04	0.00E+00	0.00E+00
Xe-133	Curies	1.09E-01	3.20E-02	0.00E+00	8.59E-02
Xe-135M	Curies	0.00E+00	0.00E+00	0.00E+00	5.41E-05
Xe-135	Curies	7.58E-03	5.27E-05	1.11E-05	0.00E+00
Xe-127	Curies	0.00E+00	0.00E+00	0.00E+00	7.37E-05
Total For Period	**Curies**	**9.13E-01**	**3.27E-02**	**1.65E-01**	**4.15E-01**
Iodines					
I-131	Curies	0.00E+00	2.38E-08	0.00E+00	5.32E-08
Total For Period	**Curies**	**0.00E+00**	**2.38E-08**	**0.00E+00**	**5.32E-08**
Particulates					
Co-58	Curies	0.00E+00	0.00E+00	0.00E+00	7.13E-09
Co-60	Curies	0.00E+00	0.00E+00	0.00E+00	3.11E-09
Total For Period	**Curies**	**0.00E+00**	**0.00E+00**	**0.00E+00**	**1.02E-08**
Tritium					
H-3	Curies	1.83E+00	0.00E+00	6.40E-01	1.77E+00
Gross Alpha					
No Nuclides Found	Curies	0.00E+00	0.00E+00	0.00E+00	0.00E+00

See Table 2-6 for typical minimum detectable concentrations. If Not Detected, Nuclide is Not Reported. Zeroes in this table indicates that no radioactivity was present at detectable levels.

Table 2-3A
Joseph M Farley Nuclear Plant
RADIOACTIVE EFFLUENT RELEASE REPORT - 2010
Gaseous Effluents - Ground Level Releases
Unit: 1
Starting: 1-Jan- 2010 Ending: 31-Dec-2010

		Continuous Mode			
Nuclides Released	**Units**	**1ST Quarter**	**2ND Quarter**	**3RD Quarter**	**4TH Quarter**
Fission Gases					
No Nuclides Found	Curies	0.00E+00	0.00E+00	0.00E+00	0.00E+00
Iodines					
No Nuclides Found	Curies	0.00E+00	0.00E+00	0.00E+00	0.00E+00
Particulates					
No Nuclides Found	Curies	0.00E+00	0.00E+00	0.00E+00	0.00E+00
Tritium					
No Nuclides Found	Curies	0.00E+00	0.00E+00	0.00E+00	0.00E+00
Gross Alpha					
No Nuclides Found	Curies	0.00E+00	0.00E+00	0.00E+00	0.00E+00

See Table 2-6 for typical minimum detectable concentrations. If Not Detected, Nuclide is Not Reported. Zeroes in this table indicates that no radioactivity was present at detectable levels.

Table 2-3A
Joseph M Farley Nuclear Plant
RADIOACTIVE EFFLUENT RELEASE REPORT - 2010
Gaseous Effluents - Ground Level Releases
Unit: 1
Starting: 1-Jan- 2010 Ending: 31-Dec-2010

		Batch Mode			
Nuclides Released	**Units**	**1ST Quarter**	**2ND Quarter**	**3RD Quarter**	**4TH Quarter**
Fission Gases					
No Nuclides Found	Curies	0.00E+00	0.00E+00	0.00E+00	0.00E+00
Iodines					
No Nuclides Found	Curies	0.00E+00	0.00E+00	0.00E+00	0.00E+00
Particulates					
No Nuclides Found	Curies	0.00E+00	0.00E+00	0.00E+00	0.00E+00
Tritium					
No Nuclides Found	Curies	0.00E+00	0.00E+00	0.00E+00	0.00E+00
Gross Alpha					
No Nuclides Found	Curies	0.00E+00	0.00E+00	0.00E+00	0.00E+00

See Table 2-6 for typical minimum detectable concentrations. If Not Detected, Nuclide is Not Reported. Zeroes in this table indicates that no radioactivity was present at detectable levels.

Table 2-3B
Joseph M Farley Nuclear Plant
RADIOACTIVE EFFLUENT RELEASE REPORT - 2010
Gaseous Effluents - Ground Level Releases
Unit: 2
Starting: 1-Jan- 2010 Ending: 31-Dec-2010

		Continuous Mode			
Nuclides Released	**Units**	**1ST Quarter**	**2ND Quarter**	**3RD Quarter**	**4TH Quarter**
Fission Gases					
No Nuclides Found	Curies	0.00E+00	0.00E+00	0.00E+00	0.00E+00
Iodines					
No Nuclides Found	Curies	0.00E+00	0.00E+00	0.00E+00	0.00E+00
Particulates					
No Nuclides Found	Curies	0.00E+00	0.00E+00	0.00E+00	0.00E+00
Tritium					
No Nuclides Found	Curies	0.00E+00	0.00E+00	0.00E+00	0.00E+00
Gross Alpha					
No Nuclides Found	Curies	0.00E+00	0.00E+00	0.00E+00	0.00E+00

See Table 2-6 for typical minimum detectable concentrations. If Not Detected, Nuclide is Not Reported. Zeroes in this table indicates that no radioactivity was present at detectable levels.

Table 2-3B
Joseph M Farley Nuclear Plant
RADIOACTIVE EFFLUENT RELEASE REPORT - 2010
Gaseous Effluents - Ground Level Releases
Unit: 2
Starting: 1-Jan- 2010 Ending: 31-Dec-2010

		Batch Mode			
Nuclides Released	**Units**	**1ST Quarter**	**2ND Quarter**	**3RD Quarter**	**4TH Quarter**
Fission Gases					
No Nuclides Found	Curies	0.00E+00	0.00E+00	0.00E+00	0.00E+00
Iodines					
No Nuclides Found	Curies	0.00E+00	0.00E+00	0.00E+00	0.00E+00
Particulates					
No Nuclides Found	Curies	0.00E+00	0.00E+00	0.00E+00	0.00E+00
Tritium					
No Nuclides Found	Curies	0.00E+00	0.00E+00	0.00E+00	0.00E+00
Gross Alpha					
No Nuclides Found	Curies	0.00E+00	0.00E+00	0.00E+00	0.00E+00

See Table 2-6 for typical minimum detectable concentrations. If Not Detected, Nuclide is Not Reported. Zeroes in this table indicates that no radioactivity was present at detectable levels.

Table 2-3C
Joseph M Farley Nuclear Plant
RADIOACTIVE EFFLUENT RELEASE REPORT - 2010
Gaseous Effluents - Ground Level Releases
Unit: Site
Starting: 1-Jan- 2010 Ending: 31-Dec-2010

		Continuous Mode			
Nuclides Released	**Units**	**1ST Quarter**	**2ND Quarter**	**3RD Quarter**	**4TH Quarter**
Fission Gases					
No Nuclides Found	Curies	0.00E+00	0.00E+00	0.00E+00	0.00E+00
Iodines					
No Nuclides Found	Curies	0.00E+00	0.00E+00	0.00E+00	0.00E+00
Particulates					
No Nuclides Found	Curies	0.00E+00	0.00E+00	0.00E+00	0.00E+00
Tritium					
No Nuclides Found	Curies	0.00E+00	0.00E+00	0.00E+00	0.00E+00
Gross Alpha					
No Nuclides Found	Curies	0.00E+00	0.00E+00	0.00E+00	0.00E+00

See Table 2-6 for typical minimum detectable concentrations. If Not Detected, Nuclide is Not Reported. Zeroes in this table indicates that no radioactivity was present at detectable levels.

Table 2-3C
Joseph M Farley Nuclear Plant
RADIOACTIVE EFFLUENT RELEASE REPORT - 2010
Gaseous Effluents - Ground Level Releases
Unit: Site
Starting: 1-Jan- 2010 Ending: 31-Dec-2010

		Batch Mode			
Nuclides Released	**Units**	**1ST Quarter**	**2ND Quarter**	**3RD Quarter**	**4TH Quarter**
Fission Gases					
No Nuclides Found	Curies	0.00E+00	0.00E+00	0.00E+00	0.00E+00
Iodines					
No Nuclides Found	Curies	0.00E+00	0.00E+00	0.00E+00	0.00E+00
Particulates					
No Nuclides Found	Curies	0.00E+00	0.00E+00	0.00E+00	0.00E+00
Tritium					
No Nuclides Found	Curies	0.00E+00	0.00E+00	0.00E+00	0.00E+00
Gross Alpha					
No Nuclides Found	Curies	0.00E+00	0.00E+00	0.00E+00	0.00E+00

See Table 2-6 for typical minimum detectable concentrations. If Not Detected, Nuclide is Not Reported. Zeroes in this table indicates that no radioactivity was present at detectable levels.

Table 2-4A
Joseph M Farley Nuclear Plant
RADIOACTIVE EFFLUENT RELEASE REPORT - 2010
Air Doses Due to Gaseous Releases
Unit: 1
Starting: 1-Jan- 2010 Ending: 31-Dec-2010

Cumulative Doses Per Quarter

Type of Radiation	ODCM Lmt	Units	1ST Qtr	% ODCM	2ND Qtr	% ODCM	3RD Qtr	% ODCM	4TH Qtr	% ODCM
Gamma Air	5.00E+00	mRad	1.64E-03	3.27E-02	7.44E-03	1.49E-01	2.26E-03	4.52E-02	5.91E-04	1.18E-02
Beta Air	1.00E+01	mRad	6.21E-04	6.21E-03	2.85E-03	2.85E-02	8.13E-04	8.13E-03	2.11E-04	2.11E-03

Cumulative Doses Per Year

Type of Radiation	ODCM Lmt	Units	Year to End Date	% ODCM	Receptor	Limit
Gamma Air	1.00E+01	mRad	1.19E-02	1.19E-01	Site Boundary SSE Mixed Mode R	Air Dose Gamma Annual
Beta Air	2.00E+01	mRad	4.50E-03	2.25E-02	Site Boundary SSE Mixed Mode R	Air Dose Beta Annual

Table 2-4B
Joseph M Farley Nuclear Plant
RADIOACTIVE EFFLUENT RELEASE REPORT - 2010
Air Doses Due to Gaseous Releases
Unit: 2
Starting: 1-Jan- 2010 Ending: 31-Dec-2010

Cumulative Doses Per Quarter

Type of Radiation	ODCM Lmt	Units	1ST Qtr	% ODCM	2ND Qtr	% ODCM	3RD Qtr	% ODCM	4TH Qtr	% ODCM
Gamma Air	5.00E+00	mRad	5.06E-04	1.01E-02	1.14E-03	2.29E-02	9.98E-04	2.00E-02	8.45E-05	1.69E-03
Beta Air	1.00E+01	mRad	1.78E-04	1.78E-03	4.05E-04	4.05E-03	3.52E-04	3.52E-03	2.98E-05	2.98E-04

Cumulative Doses Per Year

Type of Radiation	ODCM Lmt	Units	Year to End Date	% ODCM	Receptor	Limit
Gamma Air	1.00E+01	mRad	2.73E-03	2.73E-02	Site Boundary SSE Mixed Mode R	Air Dose Gamma Annual
Beta Air	2.00E+01	mRad	9.65E-04	4.82E-03	Site Boundary SSE Mixed Mode R	Air Dose Beta Annual

Table 2-5A

Joseph M Farley Nuclear Plant

RADIOACTIVE EFFLUENT RELEASE REPORT - 2010

Doses To A Member Of The Public Due To Radioiodines, Tritium, and Particulates in Gaseous Releases

Unit: 1

Starting: 1-Jan- 2010 Ending: 31-Dec-2010

Cumulative Doses Per Quarter

Organ	ODCM Lmt	Units	1ST Qtr	% ODCM	2ND Qtr	% ODCM	3RD Qtr	% ODCM	4TH Qtr	% ODCM
Bone	7.50E+00	mRem	9.80E-06	1.31E-04	2.98E-06	3.97E-05	8.19E-07	1.09E-05	5.45E-06	7.26E-05
GI-Lli	7.50E+00	mRem	3.01E-03	4.02E-02	2.58E-03	3.45E-02	5.00E-04	6.67E-03	3.06E-04	4.08E-03
Kidney	7.50E+00	mRem	3.02E-03	4.03E-02	2.59E-03	3.45E-02	5.02E-04	6.69E-03	3.06E-04	4.08E-03
Liver	7.50E+00	mRem	3.02E-03	4.03E-02	2.58E-03	3.45E-02	5.01E-04	6.68E-03	3.06E-04	4.07E-03
Lung	7.50E+00	mRem	3.01E-03	4.02E-02	2.58E-03	3.45E-02	5.00E-04	6.67E-03	3.04E-04	4.06E-03
Thyroid	7.50E+00	mRem	5.02E-03	6.70E-02	2.92E-03	3.90E-02	7.20E-04	9.61E-03	6.25E-04	8.33E-03
Total Body	7.50E+00	mRem	3.02E-03	4.02E-02	2.58E-03	3.45E-02	5.01E-04	6.68E-03	3.06E-04	4.07E-03

Cumulative Doses per Year

Organ	ODCM Lmt	Units	Year to Ending Date	% ODCM	Receptor	Limit
Bone	1.500E+01	mRem	1.904E-05	1.270E-04	Gas Controlling Receptor	Iodine/Part Dose Annual
GI-Lli	1.500E+01	mRem	6.404E-03	4.269E-02	Gas Controlling Receptor	Iodine/Part Dose Annual
Kidney	1.500E+01	mRem	6.416E-03	4.277E-02	Gas Controlling Receptor	Iodine/Part Dose Annual
Liver	1.500E+01	mRem	6.411E-03	4.274E-02	Gas Controlling Receptor	Iodine/Part Dose Annual
Lung	1.500E+01	mRem	6.401E-03	4.267E-02	Gas Controlling Receptor	Iodine/Part Dose Annual
Thyroid	1.500E+01	mRem	9.293E-03	6.195E-02	Gas Controlling Receptor	Iodine/Part Dose Annual
Total Body	1.500E+01	mRem	6.407E-03	4.271E-02	Gas Controlling Receptor	Iodine/Part Dose Annual

Table 2-5B

Joseph M Farley Nuclear Plant

RADIOACTIVE EFFLUENT RELEASE REPORT - 2010

Doses To A Member Of The Public Due To Radioiodines, Tritium, and Particulates in Gaseous Releases

Unit: 2

Starting: 1-Jan- 2010 Ending: 31-Dec-2010

Cumulative Doses Per Quarter

Organ	ODCM Lmt	Units	1ST Qtr	% ODCM	2ND Qtr	% ODCM	3RD Qtr	% ODCM	4TH Qtr	% ODCM
Bone	7.50E+00	mRem	1.63E-07	2.17E-06	6.37E-06	8.49E-05	1.21E-05	1.61E-04	1.69E-10	2.26E-09
GI-Lli	7.50E+00	mRem	3.43E-04	4.58E-03	9.33E-04	1.24E-02	3.03E-03	4.04E-02	4.66E-04	6.21E-03
Kidney	7.50E+00	mRem	3.43E-04	4.58E-03	9.33E-04	1.24E-02	3.03E-03	4.04E-02	4.66E-04	6.21E-03
Liver	7.50E+00	mRem	3.43E-04	4.58E-03	9.33E-04	1.24E-02	3.03E-03	4.04E-02	4.66E-04	6.21E-03
Lung	7.50E+00	mRem	3.43E-04	4.58E-03	9.33E-04	1.24E-02	3.03E-03	4.04E-02	4.66E-04	6.21E-03
Thyroid	7.50E+00	mRem	3.43E-04	4.58E-03	9.34E-04	1.24E-02	3.03E-03	4.04E-02	4.66E-04	6.21E-03
Total Body	7.50E+00	mRem	3.43E-04	4.58E-03	9.34E-04	1.24E-02	3.03E-03	4.04E-02	4.66E-04	6.21E-03

Cumulative Doses per Year

Organ	ODCM Lmt	Units	Year to Ending Date	% ODCM	Receptor	Limit
Bone	1.500E+01	mRem	1.862E-05	1.241E-04	Gas Controlling Receptor	Iodine/Part Dose Annual
GI-Lli	1.500E+01	mRem	4.769E-03	3.180E-02	Gas Controlling Receptor	Iodine/Part Dose Annual
Kidney	1.500E+01	mRem	4.769E-03	3.179E-02	Gas Controlling Receptor	Iodine/Part Dose Annual
Liver	1.500E+01	mRem	4.769E-03	3.179E-02	Gas Controlling Receptor	Iodine/Part Dose Annual
Lung	1.500E+01	mRem	4.769E-03	3.179E-02	Gas Controlling Receptor	Iodine/Part Dose Annual
Thyroid	1.500E+01	mRem	4.769E-03	3.180E-02	Gas Controlling Receptor	Iodine/Part Dose Annual
Total Body	1.500E+01	mRem	4.772E-03	3.182E-02	Gas Controlling Receptor	Iodine/Part Dose Annual

TABLE 2-6
Joseph M. Farley Nuclear Plant
ANNUAL RADIOACTIVE EFFLUENT RELEASE REPORT - 2010
MINIMUM DETECTABLE CONCENTRATIONS - GASEOUS EFFLUENT ANALYSES

The values in this table represent a priori Minimum Detectable Concentrations (MDC) that are typically achieved in laboratory analyses of gaseous radwaste samples.

Nuclide	MDC(uCi/ML)	Nuclide	MDC(uCi/ML)
MN-54	4.17E-14	KR-87	4.64E-08
CO-58	7.65E-14	KR-88	7.46E-08
FE-59	2.53E-14	XE-133	4.71E-08
CO-60	6.01E-14	XE-133M	1.42E-07
ZN-65	2.40E-13	XE-135	1.58E-08
MO-99	4.46E-13	XE-138	1.21E-07
CS-134	5.17E-14	I-131	5.95E-14
CS-137	6.95E-15	I-133	8.96E-14
CE-141	4.28E-14		
CE-144	1.64E-13		

Table 2-7A
Joseph M Farley Nuclear Plant
RADIOACTIVE EFFLUENT RELEASE REPORT - 2010
Gaseous Effluents - Batch Release Summary
Unit: 1
Starting: 1-Jan- 2010 Ending: 31-Dec-2010

Gaseous Releases	Units	1ST Quarter	2ND Quarter	3RD Quarter	4TH Quarter	Year Totals
1. Number of batch releases		76	0	8	18	102
2. Total time period for batch releases	(Minutes)	4.38E+03	0.00E+00	3.92E+03	2.02E+03	1.03E+04
3. Maximum time period for a batch release	(Minutes)	5.63E+02	0.00E+00	7.59E+02	6.84E+02	7.59E+02
4. Average time period for a batch release	(Minutes)	5.76E+01	0.00E+00	4.89E+02	1.12E+02	1.01E+02
5. Minimum time period for a batch release	(Minutes)	5.00E+00	0.00E+00	2.31E+02	6.00E+00	5.00E+00

Table 2-7B
Joseph M Farley Nuclear Plant
RADIOACTIVE EFFLUENT RELEASE REPORT - 2010
Gaseous Effluents - Batch Release Summary
Unit: 2
Starting: 1-Jan- 2010 Ending: 31-Dec-2010

Gaseous Releases	Units	1ST Quarter	2ND Quarter	3RD Quarter	4TH Quarter	Year Totals
1. Number of batch releases		102	8	38	65	213
2. Total time period for batch releases	(Minutes)	8.31E+03	2.73E+03	2.31E+03	3.14E+03	1.65E+04
3. Maximum time period for a batch release	(Minutes)	1.05E+03	4.13E+02	2.90E+02	2.68E+02	1.05E+03
4. Average time period for a batch release	(Minutes)	8.15E+01	3.41E+02	6.08E+01	4.83E+01	7.74E+01
5. Minimum time period for a batch release	(Minutes)	4.00E+00	2.67E+02	6.00E+00	2.00E+00	2.00E+00

Table 2-8A
Joseph M Farley Nuclear Plant
RADIOACTIVE EFFLUENT RELEASE REPORT - 2010
Gaseous Effluents - Abnormal Release Summary
Unit: 1
Starting: 1-Jan- 2010 Ending: 31-Dec-2010

Gaseous Releases	Units	1ST Quarter	2ND Quarter	3RD Quarter	4TH Quarter	Year Totals
1. Number of Releases		0	0	0	0	0
2. Total Time For All Releases	(Minutes)	0.00E+00	0.00E+00	0.00E+00	0.00E+00	0.00E+00
3. Maximum Time For A Release	(Minutes)	0.00E+00	0.00E+00	0.00E+00	0.00E+00	0.00E+00
4. Average Time For A Release	(Minutes)	0.00E+00	0.00E+00	0.00E+00	0.00E+00	0.00E+00
5. Minimum Time For A Release	(Minutes)	0.00E+00	0.00E+00	0.00E+00	0.00E+00	0.00E+00
6. Total activity for all releases	(Curies)	0.00E+00	0.00E+00	0.00E+00	0.00E+00	0.00E+00

Table 2-8B

Joseph M Farley Nuclear Plant
RADIOACTIVE EFFLUENT RELEASE REPORT - 2010
Gaseous Effluents - Abnormal Release Summary
Unit: 2
Starting: 1-Jan-2010 Ending: 31-Dec-2010

Gaseous Releases	Units	1ST Quarter	2ND Quarter	3RD Quarter	4TH Quarter	Year Totals
1. Number of Releases	:	0	0	0	0	0
2. Total Time For All Releases	(Minutes):	0.00E+00	0.00E+00	0.00E+00	0.00E+00	0.00E+00
3. Maximum Time For A Release	(Minutes):	0.00E+00	0.00E+00	0.00E+00	0.00E+00	0.00E+00
4. Average Time For A Release	(Minutes):	0.00E+00	0.00E+00	0.00E+00	0.00E+00	0.00E+00
5. Minimum Time For A Release	(Minutes):	0.00E+00	0.00E+00	0.00E+00	0.00E+00	0.00E+00
6. Total activity for all releases	(Curies) :	0.00E+00	0.00E+00	0.00E+00	0.00E+00	0.00E+00

3.0 SOLID WASTE

3.1 Regulatory Requirements

3.1.1 Solid Radioactive Waste System

FNP-0-M-30 step B.3.1 states that the radwaste solidification system shall be OPERABLE and used, as applicable in accordance with a PROCESS CONTROL PROGRAM, for the SOLIDIFICATION and packaging of radioactive wastes to ensure meeting the requirements of 10 CFR Part 20 and 10 CFR Part 71 prior to shipment of radioactive wastes from the site.

3.1.2 Reporting Requirements

FNP-0-M-30 step B.3.1 states that the Annual Radioactive Effluent Release Report, submitted in accordance with Technical Specifications 5.6.2 and 5.6.3, shall include a summary of the quantities of solid radwaste released from the units as outlined in Regulatory Guide 1.21, "Measuring, Evaluating, and Reporting Radioactive Material in Liquid and Gaseous Effluents and Solid Waste," Revision 2, June 2009, with data summarized on an annual basis following the format of Table A-3 thereof.

3.2 Solid Waste Data

Regulatory Guide 1.21 Revision 2 Table A-3 is found in the report as Table 3-1.

TABLE 3-1
Joseph M. Farley Nuclear Plant
ANNUAL RADIOACTIVE EFFLUENT RELEASE REPORT – 2010
SOLID RADIOACTIVE WASTE SHIPPED FOR PROCESSING OR DISPOSAL

Starting 01-Jan-2010 Ending 31-Dec-2010

Resins, Filters, and Evaporator Bottoms	**Volume**		**Curies Shipped**
Waste Class	ft^3	m^3	
A	0.00E+00	0.00E+00	0.00E+00
B	0.00E+00	0.00E+00	0.00E+00
C	0.00E+00	0.00E+00	0.00E+00
ALL	0.00E+00	0.00E+00	0.00E+00

Major Nuclides for the Above Table:
Waste Class A N/A
Waste Class B N/A
Waste Class C N/A
ALL N/A

Dry Active Waste	**Volume**		**Curies Shipped**
Waste Class	ft^3	m^3	
A	1.87E+04	5.31E+02	3.72E-01
B	0.00E+00	0.00E+00	0.00E+00
C	0.00E+00	0.00E+00	0.00E+00
ALL	1.87E+04	5.31E+02	3.72E-01

Major Nuclides for the Above Table:

Waste Class A	Nb-95 27.431%	Zr-95 18.303%	Fe-55 17.517%	Co-58 10.116%
	Co-60 6.889%	Cr-51 6.008%	Ni-63 5.202%	Zn-65 2.096%
	Be-7 1.223%	Sb-125 1.122%	H-3 1.078%	
Waste Class B	N/A			
Waste Class C	N/A			
ALL	Nb-95 27.431%	Zr-95 18.303%	Fe-55 17.517%	Co-58 10.116%
	Co-60 6.889%	Cr-51 6.008%	Ni-63 5.202%	Zn-65 2.096%
	Be-7 1.223%	Sb-125 1.122%	H-3 1.078%	

Irradiated Components	**Volume**		**Curies Shipped**
Waste Class	ft^3	m^3	
A	0.00E+00	0.00E+00	0.00E+00
B	0.00E+00	0.00E+00	0.00E+00
C	0.00E+00	0.00E+00	0.00E+00
ALL	0.00E+00	0.00E+00	0.00E+00

Major Nuclides for the Above Table:
Waste Class A N/A
Waste Class B N/A
Waste Class C N/A
ALL N/A

TABLE 3-1
Joseph M. Farley Nuclear Plant
ANNUAL RADIOACTIVE EFFLUENT RELEASE REPORT – 2010
SOLID RADIOACTIVE WASTE SHIPPED FOR PROCESSING OR DISPOSAL

Starting 01-Jan-2010 Ending 31-Dec-2010

(Continued)

Other Waste	**Volume**		**Curies Shipped**
Waste Class	ft^3	m^3	
A	2.85E+02	8.07E+00	2.40E-04
B	0.00E+00	0.00E+00	0.00E+00
C	0.00E+00	0.00E+00	0.00E+00
ALL	2.85E+02	8.07E+00	2.40E-04

Major Nuclides for the Above Table:

Waste Class A H-3 99.769%

Waste Class B N/A

Waste Class C N/A

ALL H-3 99.769%

Sum of All Low-Level Waste Shipped from Site	**Volume**		**Curies Shipped**
Waste Class	ft^3	m^3	
A	1.90E+04	5.39E+02	3.72E-01
B	0.00E+00	0.00E+00	0.00E+00
C	0.00E+00	0.00E+00	0.00E+00
ALL	1.90E+04	5.39E+02	3.72E-01

Major Nuclides for the Above Table:

Waste Class A	Nb-95 27.413%	Zr-95 18.291%	Fe-55 17.506%	Co-58 10.109%
	Co-60 6.884%	Cr-51 6.004%	Ni-63 5.198%	Zn-65 2.095%
	Be-7 1.222%	H-3 1.142%	Sb-125 1.122%	
Waste Class B	N/A			
Waste Class C	N/A			
ALL	Nb-95 27.413%	Zr-95 18.291%	Fe-55 17.506%	Co-58 10.109%
	Co-60 6.884%	Cr-51 6.004%	Ni-63 5.198%	Zn-65 2.095%
	Be-7 1.222%	H-3 1.142%	Sb-125 1.122%	

4.0 DOSES TO MEMBERS OF THE PUBLIC INSIDE THE SITE BOUNDARY

4.1 Regulatory Requirements

Current FNP effluent controls as established by ODCM 6.1 do not require assessment of the radiation doses from radioactive liquid and gaseous effluents to MEMBERS OF THE PUBLIC due to their activities inside the SITE BOUNDARY (ODCM Figure 10-1).

4.2 Demonstration of Compliance

However, this assessment has been performed for 2010 using the methods described in ODCM 6.2 and is included in this section as Table 4-1.

Table 4-1

Joseph M Farley Nuclear Plant

RADIOACTIVE EFFLUENT RELEASE REPORT - 2010

Doses to a Member of the Public Due to Activities Inside the Site Boundary

Unit: Site

Starting: 1-Jan-2010 Ending: 31-Dec-2010

Location Name: Visitor Center
Distance (kilometers): 3.06E-01
Sector: N
Occupancy Factor: 1.37E-03
Age Group: Child

Ground Level Release	Noble Gas	X/Q (sec/m3): 1.04E-04	
Ground Level Release	Particulate and Radioiodine	X/Q (sec/m3): 1.04E-04	D/Q (m-2): 4.80E-07
Mixed Mode Release	Noble Gas	X/Q (sec/m3): 8.80E-06	
Mixed Mode Release	Particulate and Radioiodine	X/Q (sec/m3): 8.80E-06	D/Q (m-2): 6.20E-08

	Units	1ST Quarter	2ND Quarter	3RD Quarter	4TH Quarter	Year
Bone	mRem	3.23E-08	9.35E-09	2.73E-09	1.23E-08	5.67E-08
Liver	mRem	1.05E-05	1.10E-05	1.11E-05	2.42E-06	3.51E-05
Total Body	mRem	1.05E-05	1.10E-05	1.11E-05	2.42E-06	3.50E-05
Thyroid	mRem	1.18E-05	1.13E-05	1.12E-05	2.53E-06	3.68E-05
Kidney	mRem	1.05E-05	1.10E-05	1.11E-05	2.42E-06	3.51E-05
Lung	mRem	1.05E-05	1.10E-05	1.11E-05	2.42E-06	3.50E-05
GI-Lli	mRem	1.05E-05	1.10E-05	1.11E-05	2.42E-06	3.50E-05
NG Total Body	mRem	2.27E-05	9.10E-05	3.46E-05	7.17E-06	1.55E-04
Whole Body Dose	mRem	3.32E-05	1.02E-04	4.56E-05	9.59E-06	1.91E-04

Table 4-1

Joseph M Farley Nuclear Plant

RADIOACTIVE EFFLUENT RELEASE REPORT - 2010

Doses to a Member of the Public Due to Activities Inside the Site Boundary

Unit: Site

Starting: 1-Jan-2010 Ending: 31-Dec-2010

Location Name: Service Water Pond
Distance (kilometers): 9.66E-01
Sector: N
Occupancy Factor: 7.57E-03
Age Group: Child

Ground Level Release	Noble Gas	X/Q (sec/m3): 4.74E-05	
Ground Level Release	Particulate and Radioiodine	X/Q (sec/m3): 4.74E-05	D/Q (m-2): 1.31E-07
Mixed Mode Release	Noble Gas	X/Q (sec/m3): 9.75E-07	
Mixed Mode Release	Particulate and Radioiodine	X/Q (sec/m3): 9.75E-07	D/Q (m-2): 2.78E-08

	Units	1ST Quarter	2ND Quarter	3RD Quarter	4TH Quarter	Year
Bone	mRem	7.15E-08	2.11E-08	3.61E-09	2.92E-08	1.25E-07
Liver	mRem	6.51E-06	6.77E-06	6.77E-06	1.50E-06	2.15E-05
Total Body	mRem	6.50E-06	6.77E-06	6.77E-06	1.50E-06	2.15E-05
Thyroid	mRem	7.27E-06	6.92E-06	6.87E-06	1.57E-06	2.26E-05
Kidney	mRem	6.51E-06	6.77E-06	6.77E-06	1.50E-06	2.16E-05
Lung	mRem	6.50E-06	6.77E-06	6.77E-06	1.50E-06	2.15E-05
GI-Lli	mRem	6.50E-06	6.77E-06	6.77E-06	1.50E-06	2.15E-05
NG Total Body	mRem	1.39E-05	5.57E-05	2.12E-05	4.39E-06	9.52E-05
Whole Body Dose	mRem	2.04E-05	6.25E-05	2.79E-05	5.89E-06	1.17E-04

Table 4-1

Joseph M Farley Nuclear Plant

RADIOACTIVE EFFLUENT RELEASE REPORT - 2010

Doses to a Member of the Public Due to Activities Inside the Site Boundary

Unit: Site

Starting: 1-Jan-2010 Ending: 31-Dec-2010

Location Name: River Water Discharge - Air
Distance (kilometers): 1.64E+00
Sector: N
Occupancy Factor: 1.14E-02
Age Group: Child

Ground Level Release	Noble Gas	X/Q (sec/m3): 1.63E-05	
Ground Level Release	Particulate and Radioiodine	X/Q (sec/m3): 1.63E-05	D/Q (m-2): 4.55E-08
Mixed Mode Release	Noble Gas	X/Q (sec/m3): 7.05E-07	
Mixed Mode Release	Particulate and Radioiodine	X/Q (sec/m3): 7.05E-07	D/Q (m-2): 1.39E-08

	Units	1ST Quarter	2ND Quarter	3RD Quarter	4TH Quarter	Year
Bone	mRem	5.48E-08	1.61E-08	3.06E-09	2.21E-08	9.61E-08
Liver	mRem	7.06E-06	7.36E-06	7.37E-06	1.63E-06	2.34E-05
Total Body	mRem	7.06E-06	7.36E-06	7.37E-06	1.63E-06	2.34E-05
Thyroid	mRem	7.89E-06	7.53E-06	7.48E-06	1.70E-06	2.46E-05
Kidney	mRem	7.06E-06	7.36E-06	7.37E-06	1.63E-06	2.34E-05
Lung	mRem	7.06E-06	7.36E-06	7.37E-06	1.63E-06	2.34E-05
GI-Lli	mRem	7.06E-06	7.36E-06	7.37E-06	1.63E-06	2.34E-05
NG Total Body	mRem	1.51E-05	6.07E-05	2.31E-05	4.78E-06	1.04E-04
Whole Body Dose	mRem	2.22E-05	6.80E-05	3.04E-05	6.40E-06	1.27E-04

Table 4-1

Joseph M Farley Nuclear Plant

RADIOACTIVE EFFLUENT RELEASE REPORT - 2010

Doses to a Member of the Public Due to Activities Inside the Site Boundary

Unit: Site

Starting: 1-Jan-2010 Ending: 31-Dec-2010

Location Name: New Construction Activity
Distance (kilometers): 3.22E-01
Sector: S
Occupancy Factor: 2.28E-01
Age Group: Adult

Ground Level Release	Noble Gas	X/Q (sec/m3): 1.85E-04	D/Q (m-2): 9.26E-08
Ground Level Release	Particulate and Radioiodine	X/Q (sec/m3): 6.66E-05	D/Q (m-2): 9.26E-08
Mixed Mode Release	Noble Gas	X/Q (sec/m3): 2.42E-06	D/Q (m-2): 8.66E-09
Mixed Mode Release	Particulate and Radioiodine	X/Q (sec/m3): 2.23E-06	D/Q (m-2): 8.66E-09

	Units	1ST Quarter	2ND Quarter	3RD Quarter	4TH Quarter	Year
Bone	mRem	1.13E-10	2.17E-07	8.32E-08	2.99E-07	5.99E-07
Liver	mRem	6.65E-05	5.33E-04	5.27E-04	1.15E-04	1.24E-03
Total Body	mRem	6.65E-05	5.33E-04	5.27E-04	1.15E-04	1.24E-03
Thyroid	mRem	6.65E-05	5.39E-04	5.31E-04	1.19E-04	1.26E-03
Kidney	mRem	6.65E-05	5.33E-04	5.27E-04	1.15E-04	1.24E-03
Lung	mRem	6.65E-05	5.33E-04	5.27E-04	1.15E-04	1.24E-03
GI-Lli	mRem	6.65E-05	5.33E-04	5.27E-04	1.15E-04	1.24E-03
NG Total Body	mRem	0.00E+00	4.15E-03	1.58E-03	3.28E-04	6.06E-03
Whole Body Dose	mRem	6.65E-05	4.68E-03	2.11E-03	4.43E-04	7.30E-03

5.0 TOTAL DOSE FROM URANIUM FUEL CYCLE (40CFR190)

5.1 Regulatory Requirements

Technical Specification 5.5.4.j states that the dose or dose commitment to any MEMBER OF THE PUBLIC over a calendar year, due to releases of radioactivity and to radiation from uranium fuel cycle sources, shall be limited to less than or equal to 25 mrem to the total body or to any organ, except the thyroid, which shall be limited to less than or equal to 75 mrem (as stated in ODCM 5.1).

With the calculated doses from the release of radioactive materials in liquid or gaseous effluents exceeding twice the limits of ODCM 2.1.3, 3.1.3, or 3.1.4, calculations shall be made according to ODCM 5.2 methods to determine whether the above (ODCM 5.1) limits have been exceeded (as stated in ODCM 5.1.2).

5.2 Demonstration of Compliance

Since none of the ODCM 2.1.3, 3.1.3, or 3.1.4 limits were exceeded during 2010, no calculations were required.

6.0 METEOROLOGICAL DATA

Meteorological data are retained onsite; these data are available to the NRC upon request. The meteorological data include annual as well as quarterly summaries of hourly measurements of wind speed, wind direction and atmospheric stability in the form of joint frequency distribution tables.

7.0 PROGRAM DEVIATIONS

7.1 Inoperable Liquid or Gaseous Effluent Monitoring Instrumentation

7.1.1 Regulatory Requirements

ODCM 7.2.2.6 states in part that the Annual Radioactive Effluent Release Report (the report) shall include deviations from the liquid and gaseous effluent monitoring instrumentation operability requirements included in Sections 2.1.1 and 3.1.1 of the ODCM. The report must also include an explanation as to why the inoperability was not corrected in a timely manner.

7.1.2 Description of Deviations

There were two effluent monitoring equipment deviations during 2010. On 12-16-09, the Unit 1 Waste Monitor Tank#2 flow indicator was declared inoperable (CR2010100515) and was out of service over 30 days on 1/15/2010. Per ODCM 2.1.1.2, this instrument should have been repaired within 30 days or explained in the Radioactive Effluent Release Report.
On 11-26-09, the U1 service water dilution flow transmitter was declared inoperable (CR2009115154) and was out of service over 30 days on 1/25/2010. Per ODCM 2.1.1.2, this instrument should have been repaired within 30 days or explained in the Radioactive Effluent Release Report. The repair on this transmitter is currently on hold pending required design modifications (CR2009115239).

7.2 Effluent Sample Analysis Exceeding Minimum Detectable Concentration (MDC)

7.2.1 Regulatory Requirements

ODCM 7.2.2.6 states in part that the report shall include deviations from the MDC requirements included in ODCM Tables 2-3 and 3-3.

7.2.2 Description of Deviations

There were no deviations during 2010.

7.3 Incorrect Compositing of Liquid or Gaseous Effluent Samples

7.3.1 Regulatory Requirements

ODCM 7.2.2.6 states in part that the report shall include deviations from composite sampling requirements included in ODCM Tables 2-3 and 3-3.

7.3.2 Description of Deviations

There were no deviations during 2010.

8.0 CHANGES TO THE PLANT FARLEY ODCM

8.1 Regulatory Requirements

Pursuant to Technical Specification 5.5.1.c and ODCM 7.2.2.5, licensee initiated changes to the ODCM shall be submitted to the Nuclear Regulatory Commission as a part of or concurrent with the Annual Radioactive Effluent Release Report for the period in which any changes were made. Included are changes to the radiological environmental monitoring program sampling locations or dose calculation locations or pathways, including any changes made pursuant to ODCM 4.1.2.2.2 (land use census).

8.2 Description of Changes

There was one change to the ODCM during 2010. The Radiological Environmental Monitoring Program (REMP) control sample location for milk, 0714 - Weir Dairy, is no longer able to provide milk samples. This location was removed from the ODCM Table 4-4, REMP Locations, and Figure 4-3, Sampling Locations, 0-20 miles. There is no available replacement location at this time.

9.0 MAJOR CHANGES TO LIQUID, GASEOUS, OR SOLID RADWASTE TREATMENT SYSTEMS

9.1 Regulatory Requirements

ODCM 7.2.2.7 states in part that, as required by ODCM 2.1.5 and 3.1.6, licensee initiated MAJOR CHANGES TO RADIOACTIVE WASTE TREATMENT SYSTEMS (liquid and gaseous) shall be reported to the Nuclear Regulatory Commission in the Annual Radioactive Effluents Release Report covering the period in which the change was reviewed and accepted for implementation.

Process Control Program (PCP) B.5.1.2 states that licensee initiated major changes to the solid radioactive waste treatment system shall be reported to the Nuclear Regulatory Commission in the Annual Radioactive Effluent Release Report for the period in which the change was implemented. The discussion of each change shall include the information specified in PCP B.4.1.

9.2 Description of Major Changes

On 4-16-2010 a change to the Process Control Program, FNP-0-M-30 Version 17 was approved by the PRB. This change updated guidance for annual reporting of solid waste based on Regulatory Guide 1.21, Revision 2. The change also included corrections to several Technical Specification references to reflect the appropriate sections of the current Technical Specifications. This revision did not result in a change to any waste forms produced at FNP.

CARBON-14

Carbon-14 (C-14) is a naturally-occurring radionuclide with a 5730 year half life. Nuclear weapons testing in the 1950s and 1960s significantly increased the amount of C-14 in the atmosphere. Nuclear power plants also produce C-14, but the amount is infinitesimal compared to what has been distributed in the environment due to weapons testing and what is produced by natural cosmic ray interactions.

As nuclear plants have improved gaseous waste processing systems and improved fuel performance, the percentages of "principal radionuclides" in gaseous effluents have changed, and C-14 has become a larger percentage. "Principal radionuclides" are determined based on public dose contribution or the amount of activity discharged compared to other radionuclides of the same effluent type. In Revision 2 (June 2009) of Regulatory Guide 1.21 (RG 1.21), "Measuring, Evaluating, and Reporting Radioactive Material in Liquid and Gaseous Effluents and Solid Waste," the NRC recommended re-evaluating "principal radionuclides" and reporting C-14 as appropriate. In 2010 Radioactive Effluent Release Reports, virtually all U. S. nuclear power plants will report C-14 amounts released and resulting doses to the maximally exposed member of the public.

Because C-14 is considered a hard-to-detect radionuclide which must be chemically separated from the effluent stream before it can be measured, RG 1.21 provides the option of calculating the C-14 source term based on power generation. The Electric Power Research Institute (EPRI) developed an accepted methodology for calculating C-14, and published the results in Technical Report 1021106 (December 2010), "Estimation of Carbon-14 in Nuclear Power Plant Gaseous Effluents." Evaluation of C-14 in radioactive liquid effluents is not required because the quantity and dose contribution has been determined to be insignificant.

At Plant Farley, the quantity of C-14 released in gaseous effluents in 2010 was estimated to be 9.28 Curies (per unit). Approximately 30% of the C-14 released is in the form of $^{14}CO_2$ and is incorporated into plants through photosynthesis. Ingestion dose results from this pathway. The remaining 70% is estimated to be organic. Both the organic and inorganic forms of C-14 contribute to inhalation dose. A child is the maximally exposed individual, and bone dose is the highest organ dose. Using the dose calculation methodology from the Farley ODCM, the resulting bone dose to a child located at the controlling receptor location would be 4.11E-01 mrem in a year which is 2.74% of the regulatory limit of 15 mrem per year (per unit) to any organ due to gaseous effluents. The resulting total body dose to a child located at the controlling receptor location would be 8.21E-02 mrem in a year which is 0.54% of the regulatory limit of 15 mrem per year (per unit) total body dose due to gaseous effluents.

Edwin I. Hatch Nuclear Plant
Joseph M. Farley Nuclear Plant
Vogtle Electric Generating Plant
Annual Radioactive Effluent Release Reports for 2010

Enclosure 3

Vogtle Annual Radioactive Effluent Release Report for 2010

SOUTHERN NUCLEAR COMPANY

VOGTLE ELECTRIC GENERATING PLANT – UNITS 1 AND 2

NRC DOCKET NOS. 50-424 AND 50-425

FACILITY OPERATING LICENSE NOS. NPF-68 AND NPF-81

ANNUAL RADIOACTIVE EFFLUENT RELEASE REPORT

FOR

JANUARY 1, 2010 TO DECEMBER 31, 2010

VOGTLE ELECTRIC GENERATING PLANT
RADIOACTIVE EFFLUENT RELEASE REPORT - 2010
TABLE OF CONTENTS

SECTION	TITLE	PAGE
1.0	Liquid Effluents	8
1.1	Regulatory Requirements	8
1.1.1	Concentration Limits	8
1.1.2	Dose Limits	8
1.2	Effluent Concentration Limit (ECL)	8
1.3	Measurements and Approximations of Total Radioactivity	9
1.3.1	Total Radioactivity Determination	9
1.3.2	Total Error Estimation	11
1.4	Liquid Effluent Release Data	12
1.5	Radiological Impact Due to Liquid Releases	12
1.6	Liquid Effluents – Batch Releases	12
1.7	Liquid Effluents - Abnormal Releases	12
Table 1-1A	Liquid Effluents – Summation of All Releases Unit 1 (Quarters 1,2,3, and 4)	13
Table 1-1B	Liquid Effluents – Summation of All Releases Unit 2 (Quarters 1,2,3, and 4)	14
Table 1-1C	Liquid Effluents – Summation of All Releases Site (Quarters 1,2,3, and 4)	15
Table 1-2A	Liquid E ffluents – Summation of All Releases Unit 1 (Quarters 1,2,3, and 4)	16

Table 1-2B	Liquid Effluents – Summation of All Releases Unit 2 (Quarters 1,2,3, and 4)	19
Table 1-2C	Liquid Effluents – Summation of All Releases Site (Quarters 1,2,3, and 4)	22
Table 1-3A	Doses to a Member of the Public Due to Liquid Releases Unit 1 (Quarters 1,2,3, and 4)	25
Table 1-3B	Doses to a Member of the Public Due to Liquid Releases Unit 2 (Quarters 1,2,3, and 4)	26
Table 1-3C	Doses to a Member of the Public Due to Liquid Releases Site (Quarters 1,2,3, and 4)	27
Table 1-4	Minimum Detectable Concentration Liquid Sample Analysis	28
Table 1-5A	Liquid Effluents – Batch Release Summary Unit 1	29
Table 1-5B	Liquid Effluents – Batch Release Summary Unit 2	30
Table 1-5C	Liquid Effluents – Batch Release Summary Site	31
Table 1-6A	Liquid Effluents – Abnormal Release Summary Unit 1	32
Table 1-6B	Liquid Effluents – Abnormal Release Summary Unit 2	33
Table 1-6C	Liquid Effluents – Abnormal Release Summary Site	34
2.0	Gaseous Effluents	35
2.1	Regulatory Requirements	35
2.1.1	Dose Rate Limits	35
2.1.2	Air Doses Due to Noble Gases in Gaseous Releases	35
2.1.3	Doses to a Member of the Public	35
2.2	Measurements and Approximations of Total Radioactivity	36

2.2.1	Sample Collection and Analysis	36
2.2.2	Total Quantities of Radioactivity, Dose Rates, and Cumulative Doses	37
2.2.2.1	Fission and Activation Gases	37
2.2.2.2	Radioiodines, Tritium and Particulate Releases	37
2.2.2.3	Gross Alpha Release	37
2.2.3	Total Error Estimation	38
2.3	Gaseous Effluent Release Data	39
2.4	Radiological Impact Due to Gaseous Releases	40
2.5	Gaseous Effluents - Batch Releases	40
2.6	Gaseous Effluents - Abnormal Releases	40
Table 2-1A	Gaseous Effluents – Summation of All Releases – Unit 1 (Quarters 1,2,3, and 4)	42
Table 2-1B	Gaseous Effluents – Summation of All Releases – Unit 2 (Quarters 1,2,3, and 4)	43
Table 2-1C	Gaseous Effluents – Summation of All Releases – Site (Quarters 1,2,3, and 4)	44
Table 2-2A	Gaseous Effluents – Mixed Mode Releases Unit 1 (Quarters 1,2,3, and 4)	45
Table 2-2B	Gaseous Effluents – Mixed Mode Releases Unit 2 (Quarters 1,2,3, and 4)	47
Table 2-2C	Gaseous Effluents – Mixed Mode Releases Site (Quarters 1,2,3, and 4)	49

Table 2-3A	Gaseous Effluents – Ground Level Releases Unit 1 (Quarters 1,2,3, and 4)	51
Table 2-3B	Gaseous Effluents – Ground Level Releases Unit 2 (Quarters 1,2,3, and 4)	53
Table 2-3C	Gaseous Effluents – Ground Level Releases Site (Quarters 1,2,3, and 4)	55
Table 2-4A	Air Doses Due to Noble Gases in Gaseous Releases Unit 1 (Quarters 1,2,3, and 4)	57
Table 2-4B	Air Doses Due to Noble Gases in Gaseous Releases Unit 2 (Quarters 1,2,3, and 4)	58
Table 2-4C	Air Doses Due to Noble Gases in Gaseous Releases Site (Quarters 1,2,3, and 4)	59
Table 2-5A	Doses to a Member of the Public Due to Radioiodines, Tritium, and Particulates in Gaseous Releases Unit 1 (Quarters 1,2,3, and 4)	60
Table 2-5B	Doses to a Member of the Public Due to Radioiodines, Tritium, and Particulates in Gaseous Releases Unit 2 (Quarters 1,2,3, and 4)	61
Table 2-5C	Doses to a Member of the Public Due to Radioiodines, Tritium, and Particulates in Gaseous Releases Site (Quarters 1,2,3, and 4)	62
Table 2-6	Minimum Detectable Concentrations Gaseous Sample Analyses	63
Table 2-7A	Gaseous Effluents – Batch Release Summary Unit 1	64

Table 2-7B	Gaseous Effluents – Batch Release Summary Unit 2	65
Table 2-7C	Gaseous Effluents – Batch Release Summary Site	66
Table 2-8A	Gaseous Effluents – Abnormal Release Summary Unit 1	67
Table 2-8B	Gaseous Effluents – Abnormal Release Summary Unit 2	68
Table 2-8C	Gaseous Effluents – Abnormal Release Summary Site	69
3.0	Solid Waste	70
3.1	Regulatory Requirements	70
3.1.1	Solid Radioactive Waste System	70
3.1.2	Reporting Requirements	70
3.2	Solid Waste Data	70
Table 3-1	Solid Waste and Irradiated Fuel Shipments	71
4.0	Doses to Members of the Public Inside the Site Boundary	75
4.1	Regulatory Requirements	75
4.2	Demonstration of Compliance	75
Table 4-1	Doses to a Member of the Public Due to Activities Inside the Site Boundary	76
5.0	Total Dose from Uranium Fuel Cycle (40CFR190)	78
5.1	Regulatory Requirements	78
5.2	Demonstration of Compliance	78
6.0	Meteorological Data	78
7.0	Program Deviations	78
7.1	Inoperable Liquid or Gaseous Effluent Monitoring Instrumentation	78
7.1.1	Regulatory Requirement	78

7.1.2	Description of Deviations	79
7.2	Tanks Exceeding Curie Content Limits	81
7.2.1	Regulatory Requirements	81
7.2.2	Description of Deviations	81
8.0	Changes to the Vogtle Electric Generating Plant Offsite Dose Calculation Manual (ODCM)	81
8.1	Regulatory Requirements	81
8.2	Description of Changes	82
9.0	Major Changes to Liquid, Gaseous, or Solid Radwaste Treatment Systems	83
9.1	Regulatory Requirements	83
9.2	Description of Major Changes	83
10.0	Corrections to Previous Reports	84
APPENDIX A	VEGP Carbon-14	85
Attachment 1	Revised Previous Reports	86

1.0 Liquid Effluents

1.1 Regulatory Requirements

1.1.1 Concentration Limits

In accordance with Technical Specification 5.5.4.b, the concentration of radioactive material released in liquid effluents to UNRESTRICTED AREAS shall be limited at all times to ten times the concentrations specified in 10 CFR 20, Appendix B, Table 2, Column 2 for radionuclides other than dissolved or entrained noble gases. For dissolved or entrained noble gases, the concentration shall be limited to 1 E-04 μCi/ml total activity.

1.1.2 Dose Limits

The dose or dose commitment to a MEMBER OF THE PUBLIC from radioactive materials in liquid effluents released, from each unit, to UNRESTRICTED AREAS shall be limited as follows:

a. During any calendar quarter to less than or equal to 1.5 mrems to the whole body and to less than or equal to 5 mrems to any organ, and

b. During any calendar year to less than or equal to 3 mrems to the whole body and to less than or equal to 10 mrems to any organ.

1.2 Effluent Concentration Limit (ECL)

ECL values used for determining the allowable liquid radwaste release rates and concentrations for the principal gamma emitters, I-131, tritium, Sr-89, Sr-90 and Fe-55 are taken from 10 CFR Part 20, Appendix B, Table 2, Column 2. A tolerance factor of up to 10 is utilized to allow flexibility in establishing practical monitor set points which can accommodate effluent releases at concentrations higher than the ECL values stated in 10 CFR 20, Appendix B, Table 2, Column 2.

For dissolved or entrained noble gases in liquid radwaste, the ECL is 1E-04 μCi/ml total activity.

For gross alpha in liquid radwaste, the ECL is 2 E-09 μCi/ml.

For all the above radionuclides or categories of radioactivity, the overall ECL fraction is determined in accordance with 10 CFR Part 20, Appendix B. The method utilizing the ECL fraction to determine release rates and liquid radwaste effluent radiation monitor set points is described in Subsection 1.3 of this report.

1.3 Measurements and Approximations of Total Radioactivity

1.3.1 Total Radioactivity Determination

Prior to the release of any tank containing liquid radwaste, and following the required recirculation, samples are collected and analyzed in accordance with the Offsite Dose Calculation Manual (ODCM) Table 2-3 "Radioactive Liquid Waste Sampling and Analysis Program". A sample from each tank which is planned for release is analyzed for principal gamma emitters, I-131, and dissolved and entrained noble gases by gamma spectroscopy. Monthly and quarterly composites are prepared for analysis by extracting aliquots from each sample taken from the tanks, which are released. Liquid radwaste sample analyses are performed as follows:

MEASUREMENT	FREQUENCY	METHOD
1. Gamma Isotopic	Each Batch	Gamma Spectroscopy with computerized data reduction.
2. Dissolved or entrained noble gases	Each Batch	Gamma Spectroscopy with computerized data reduction
3. Tritium	Monthly Composite	Distillation and liquid scintillation counting
4. Gross Alpha	Monthly Composite	Gas flow proportional counting
5. Sr-89 & Sr-90	Quarterly Composite	Chemical separation and gas flow proportional or scintillation counting
6. Fe-55	Quarterly Composite	Chemical separation and liquid scintillation counting

1.3.1 Total Radioactivity Determination cont'd

Gamma isotopic measurements are performed using germanium detectors with a resolution of 2.1 keV or lower. A peak search of the resulting gamma ray spectrum is performed by the computer system. Energy and net count data for all significant peaks are determined, and a quantitative reduction or MDC calculation is performed. This ensures that the MDC's are met for the nuclides specified in ODCM Chapter 10 (i.e., Mn-54, Fe-59, Co-58, Co-60, Zn-65, Mo-99, Cs-134, Cs-137, Ce-141 and Ce-144). The quantitative calculations, corrections for counting time, decay time, sample volume, sample geometry, detector efficiency, baseline counts, branching ratio and MDC calculations, are made based on the counts at the location in the spectrum where the peak for that radionuclide would be located, if present.

Tritium, Gross Alpha, Sr-89, Sr-90 and Fe-55 are, in some cases, analyzed offsite.

ECL fraction is determined using radionuclide concentrations of a tank planned for release, the most current results available for tritium, gross alpha, Sr-89, Sr-90 and Fe-55 and the corresponding ECL values.
This ECL fraction is used, with appropriate safety factors, tolerance factors, and the minimum assured dilution stream flow to calculate maximum permissible release rates and a liquid effluent monitor setpoint. The monitor setpoint is calculated to assure that the limits of the Offsite Dose Calculation Manual (ODCM) are not exceeded.

A monitor reading in excess of the calculated setpoint results in an automatic termination of the liquid radwaste discharge. Liquid effluent discharge is also automatically terminated if the dilution stream flow rate falls below the minimum assured dilution flow rate used in the setpoint calculations and established as a setpoint on the dilution stream flow monitor.

Radionuclide concentrations, safety factors, dilution stream flow rate, and liquid effluent radiation monitor calibrations are entered into the computer and a pre-release printout is generated. If the release is not permissible, appropriate warnings will be displayed on the computer screen. If the release is permissible, it is approved by the Chemistry Department and sent to the Operations Department for approval and release. When the release is completed, the necessary data from the release (i.e., release volume, etc.) are provided by the Operations Department to the Chemistry Department. These data are input to the computer and a post-release printout is generated. The post release printout contains the actual release rates, release concentrations and quantities, actual dilution flow, and calculated doses to an individual.

Typically achieved liquid effluent sample analyses minimum detectable concentrations are reported in Table 1-4.

1.3.2 Total Error Estimation

The total or maximum error associated with the effluent measurement includes the cumulative errors resulting from the total operation of sampling and measurement. Because it may be very difficult to assign error terms for each parameter affecting the final measurement, detailed statistical evaluation of error is not suggested. The objective should be to obtain an overall estimate of the error associated with measurements of radioactive materials released in liquid effluents.

a. Fission and activation total release was calculated from sample analysis results and release point flow rates.

Sampling and statistical error	10%
Counting Equipment Calibration	10%
Tank Volumes and System Flow Rates	20%
TOTAL ERROR	24.5%

b. Total Tritium release was calculated from sample analysis results and release point volumes.

Sampling and statistical errors	10%
Counting equipment calibration	10%
Tank volumes and system flow rate	20%
TOTAL ERROR	24.5%

c. Dissolved and entrained gases were calculated from sample analysis results and release point volumes.

Sampling and statistical error	20%
Counting equipment calibration	10%
Tank volumes and system flow rate	20%
TOTAL ERROR	30%

d. Gross alpha radioactivity was calculated from sample analysis results and release point volumes.

Sampling and statistical error	10%
Counting Equipment calibration	10%
Tank volumes and system flowrates	20%
TOTAL ERROR	24.5%

1.3.2 Total Error Estimation cont'd

e. Volume of waste prior to dilution was calculated from level indicators on the tanks and pump discharge flow rates and times.

Level Indicator error	10%
Operator Interpretation of gauge	10%
TOTAL ERROR	14%

f. Volume of dilution water used was calculated from flow totalizers and pump discharge flow rates and times.

Flow totalizer error	10%
Operator interpretation of gauge	10%
TOTAL ERROR	14%

g. Gross alpha, Sr-89, Sr-90, Fe-55 and H-3 radioactivity has an additional error associated with sample compositing.

Compositing sample error	5%

1.4 Liquid Effluent Release Data

Regulatory Guide 1.21 Tables 2A and 2B are found in this report as Tables 1-1A, 1-1B, 1-1C, 1-2A, 1-2B and 1-2C. Data is presented on a quarterly basis as required by Regulatory Guide 1.21 for all four quarters.

1.5 Radiological Impact Due to Liquid Releases

Doses to an individual due to radioactivity in liquid effluent were calculated in accordance with the Offsite Dose Calculation Manual. Results are presented in Table 1-3A for Unit 1 and 1-3B for Unit 2, for all four quarters.

1.6 Liquid Effluents – Batch Releases

Batch release information for liquid effluents is presented in Table 1-5A for Unit 1 and Table 1-5B for Unit 2.

1.7 Liquid Effluents - Abnormal Releases

There were no abnormal liquid releases during 2010.

Table 1-1A

Vogtle Electric Generating Plant

Liquid Effluents - Summation of All Releases

Unit: 1

Starting: 1-Jan- 2010 Ending: 31-Dec-2010

Type of Effluent	Units	1ST Quarter	2ND Quarter	3RD Quarter	4TH Quarter
A. Fission And Activation Products					
1. Total Release (not including tritium, gases, alpha)	Curies	1.00E-02	1.28E-02	4.94E-03	9.99E-03
2. Average diluted concentration during period	uCi/mL	1.01E-08	5.97E-09	1.92E-09	2.89E-09
3. Percent of Applicable Limit	%	*	*	*	*
B. Tritium					
1. Total Release	Curies	3.48E+02	7.67E+01	3.87E+01	1.64E+02
2. Average diluted Concentration during period	uCi/mL	3.51E-04	3.58E-05	1.50E-05	4.74E-05
3. Percent of Applicable Limit	%	*	*	*	*
C. Dissolved and Entrained Gases					
1. Total Release	Curies	4.10E-01	5.09E-04	0.00E+00	2.57E-03
2. Average diluted Concentration during period	uCi/mL	4.14E-07	2.38E-10	0.00E+00	7.45E-10
3. Percent of Applicable Limit	%	*	*	*	*
D: Gross Alpha Radioactivity					
1. Total Release	Curies	6.46E-06	2.21E-06	0.00E+00	0.00E+00
E: Waste Vol Release (Pre-Dilution)	Liters	4.51E+07	4.30E+07	4.19E+07	2.52E+07
F. Volume of Dilution Water Used	Liters	9.91E+08	2.14E+09	2.58E+09	3.46E+09

* Applicable limits are expressed in terms of dose.
See Tables 1-3A and 1-3B of this report.

Table 1-1B

Vogtle Electric Generating Plant

RADIOACTIVE EFFLUENT RELEASE REPORT - 2010
Liquid Effluents - Summation Of All Releases

Unit: 2

Starting: 1-Jan- 2010 **Ending: 31-Dec-2010**

Type of Effluent	Units	1ST Quarter	2ND Quarter	3RD Quarter	4TH Quarter
A. Fission And Activation Products					
1. Total Release (not including tritium, gases, alpha)	Curies	7.23E-03	5.56E-03	1.15E-03	1.83E-04
2. Average diluted concentration during period	uCi/Ml	7.21E-09	2.86E-09	4.74E-10	6.08E-11
3. Percent of Applicable Limit	%	*	*	*	*
B. Tritium					
1. Total Release	Curies	2.38E+02	2.90E+01	6.94E+00	9.80E-01
2. Average diluted Concentration during period	uCi/mL	2.37E-04	1.49E-05	2.86E-06	3.26E-07
3. Percent of Applicable Limit	%	*	*	*	*
C. Dissolved and Entrained Gases					
1. Total Release	Curies	1.96E-01	2.47E-04	0.00E+00	0.00E+00
2. Average diluted Concentration during period	uCi/mL	1.95E-07	1.27E-10	0.00E+00	0.00E+00
3. Percent of Applicable Limit	%	*	*	*	*
D: Gross Alpha Radioactivity					
1. Total Release	Curies	0.00E+00	1.02E-06	0.00E+00	2.00E-07
E: Waste Vol Release (Pre-Dilution)	Liters	2.67E+07	2.25E+07	1.77E+07	1.46E+07
F. Volume of Dilution Water Used	Liters	1.00E+09	1.95E+09	2.43E+09	3.00E+09

* Applicable limits are expressed in terms of dose.
See Tables 1-3A and 1-3B of this report.

Table 1-1C

Vogtle Electric Generating Plant

RADIOACTIVE EFFLUENT RELEASE REPORT - 2010
Liquid Effluents - Summation Of All Releases

Unit: Site
Starting: 1-Jan- 2010 Ending: 31-Dec-2010

Type of Effluent	Units	1ST Quarter	2ND Quarter	3RD Quarter	4TH Quarter
A. Fission And Activation Products					
1. Total Release (not including tritium, gases, alpha)	Curies	1.73E-02	1.84E-02	6.09E-03	1.02E-02
2. Average diluted concentration during period	uCi/mL	8.66E-09	4.49E-09	1.22E-09	1.57E-09
3. Percent of Applicable Limit	%	*	*	*	*
B. Tritium					
1. Total Release	Curies	5.86E+02	1.06E+02	4.57E+01	1.65E+02
2. Average diluted Concentration during period	uCi/mL	2.94E-04	2.58E-05	9.13E-06	2.55E-05
3. Percent of Applicable Limit	%	*	*	*	*
C. Dissolved and Entrained Gases					
1. Total Release	Curies	6.06E-01	7.56E-04	0.00E+00	2.57E-03
2. Average diluted Concentration during period	uCi/mL	3.04E-07	1.85E-10	0.00E+00	3.99E-10
3. Percent of Applicable Limit	%	*	*	*	*
D: Gross Alpha Radioactivity					
1. Total Release	Curies	6.46E-06	3.23E-06	0.00E+00	2.00E-07
E: Waste Vol Release (Pre-Dilution)	Liters	7.18E+07	6.55E+07	5.96E+07	3.98E+07
F. Volume of Dilution Water Used	Liters	1.99E+09	4.09E+09	5.01E+09	6.46E+09

* Applicable limits are expressed in terms of dose.
See Tables 1-3A and 1-3B of this report.

Table 1-2A

Vogtle Electric Generating Plant
RADIOACTIVE EFFLUENT RELEASE REPORT - 2010

Liquid Effluents

Unit: 1

Starting: 1-Jan- 2010 Ending: 31-Dec-2010

		Batch Mode			
Nuclides Released	**Units**	**1ST Quarter**	**2ND Quarter**	**3RD Quarter**	**4TH Quarter**
Fission & Activation					
Co-57	Curies	1.80E-06	0.00E+00	0.00E+00	8.84E-06
Co-58	Curies	2.66E-03	7.72E-04	9.13E-04	6.75E-04
Co-60	Curies	6.63E-04	2.66E-04	4.35E-04	6.74E-04
Cr-51	Curies	0.00E+00	0.00E+00	0.00E+00	1.46E-04
Fe-55	Curies	2.89E-03	8.02E-04	9.14E-04	1.29E-03
I-131	Curies	2.43E-04	5.20E-05	0.00E+00	1.43E-04
I-133	Curies	0.00E+00	0.00E+00	0.00E+00	3.88E-05
Mn-54	Curies	3.26E-06	2.28E-05	3.72E-05	1.39E-05
Nb-95	Curies	0.00E+00	8.21E-07	0.00E+00	0.00E+00
Sr-89	Curies	9.01E-04	7.14E-05	4.87E-06	0.00E+00
Sr-90	Curies	6.89E-05	5.12E-06	1.15E-06	0.00E+00
W-187	Curies	0.00E+00	0.00E+00	0.00E+00	2.06E-05
Ba-141	Curies	6.66E-05	0.00E+00	0.00E+00	0.00E+00
Cs-134	Curies	1.84E-05	4.54E-07	1.40E-05	2.76E-05
Cs-137	Curies	2.69E-04	3.03E-05	5.48E-05	5.98E-05
Eu-152	Curies	0.00E+00	0.00E+00	0.00E+00	2.65E-05
Sb-125	Curies	2.25E-03	6.05E-04	2.56E-03	6.85E-03
Tc-99M	Curies	0.00E+00	0.00E+00	0.00E+00	1.01E-05
Te-132	Curies	5.84E-06	0.00E+00	0.00E+00	0.00E+00
Te-125M	Curies	0.00E+00	1.33E-03	0.00E+00	0.00E+00
Total For Period	**Curies**	**1.00E-02**	**3.96E-03**	**4.94E-03**	**9.99E-03**
Tritium					
H-3	Curies	3.48E+02	7.66E+01	3.86E+01	1.64E+02

*Zeroes in this table indicates that no radioactivity was present at detectable levels. See Table 1-4 for typical minimum detectable concentrations

Table 1-2A

Vogtle Electric Generating Plant

RADIOACTIVE EFFLUENT RELEASE REPORT - 2010

Liquid Effluents

Unit: 1

Starting: 1-Jan- 2010 Ending: 31-Dec-2010

		Batch Mode			
Nuclides Released	**Units**	**1ST Quarter**	**2ND Quarter**	**3RD Quarter**	**4TH Quarter**
Dissolved And Entrained Gases					
Kr-85M	Curies	1.09E-05	0.00E+00	0.00E+00	0.00E+00
Xe-133	Curies	3.99E-01	4.66E-04	0.00E+00	2.57E-03
Xe-135	Curies	7.21E-04	0.00E+00	0.00E+00	0.00E+00
Xe-131M	Curies	7.83E-03	4.29E-05	0.00E+00	0.00E+00
Xe-133M	Curies	2.24E-03	0.00E+00	0.00E+00	0.00E+00
Total For Period	**Curies**	**4.10E-01**	**5.09E-04**	**0.00E+00**	**2.57E-03**
Gross Alpha Radioactivity					
G-Alpha	Curies	6.46E-06	2.21E-06	0.00E+00	0.00E+00

Zeroes in this table indicates that no radioactivity was present at detectable levels.
See Table 1-4 for typical minimum detectable concentrations.

Table 1-2A

Vogtle Electric Generating Plant

RADIOACTIVE EFFLUENT RELEASE REPORT - 2010

Liquid Effluents

Unit: 1

Starting: 1-Jan- 2010 Ending: 31-Dec-2010

		Continuous Mode			
Nuclides Released	**Units**	**1ST Quarter**	**2ND Quarter**	**3RD Quarter**	**4TH Quarter**
Fission & Activation Products					
Fe-55	Curies	0.00E+00	8.84E-03	0.00E+00	0.00E+00
Total For Period	**Curies**	**0.00E+00**	**8.84E-03**	**0.00E+00**	**0.00E+00**
Tritium					
H-3	Curies	4.19E-02	8.28E-02	1.12E-01	6.83E-02
Dissolved And Entrained Gases					
No Nuclides Found	Curies	0.00E+00	0.00E+00	0.00E+00	0.00E+00
Gross Alpha Radioactivity					
No Nuclides Found	Curies	0.00E+00	0.00E+00	0.00E+00	0.00E+00

*Zeroes in this table indicates that no radioactivity was present at detectable levels. See Table 1-4 for typical minimum detectable concentrations.

Table 1-2B

Vogtle Electric Generating Plant

RADIOACTIVE EFFLUENT RELEASE REPORT - 2010

Liquid Effluents

Unit: 2

Starting: 1-Jan- 2010 Ending: 31-Dec-2010

		Batch Mode			
Nuclides Released	**Units**	**1ST Quarter**	**2ND Quarter**	**3RD Quarter**	**4TH Quarter**
Fission & Activation Products					
Co-57	Curies	5.52E-06	0.00E+00	0.00E+00	0.00E+00
Co-58	Curies	1.28E-03	2.83E-04	1.37E-04	1.23E-05
Co-60	Curies	7.33E-04	9.96E-05	2.13E-04	9.47E-05
Fe-55	Curies	3.54E-03	2.23E-05	6.32E-05	1.31E-05
I-131	Curies	1.16E-04	3.69E-05	0.00E+00	0.00E+00
Mn-54	Curies	3.30E-05	0.00E+00	8.50E-06	3.91E-06
Sr-89	Curies	1.16E-04	0.00E+00	0.00E+00	0.00E+00
Sr-90	Curies	5.31E-06	0.00E+00	0.00E+00	0.00E+00
Cs-137	Curies	1.03E-04	0.00E+00	0.00E+00	0.00E+00
Eu-152	Curies	1.65E-05	0.00E+00	0.00E+00	0.00E+00
Sb-125	Curies	1.28E-03	2.70E-04	7.28E-04	5.85E-05
Te-132	Curies	6.01E-06	0.00E+00	0.00E+00	0.00E+00
Total For Period	**Curies**	**7.23E-03**	**7.11E-04**	**1.15E-03**	**1.83E-04**
Tritium					
H-3	Curies	2.38E+02	2.89E+01	6.86E+00	9.14E-01
Dissolved And Entrained Gases					
Xe-133	Curies	1.91E-01	2.47E-04	0.00E+00	0.00E+00
Xe-135	Curies	4.29E-05	0.00E+00	0.00E+00	0.00E+00
Xe-131M	Curies	3.55E-03	0.00E+00	0.00E+00	0.00E+00
Xe-133M	Curies	1.29E-03	0.00E+00	0.00E+00	0.00E+00
Total For Period	**Curies**	**1.96E-01**	**2.47E-04**	**0.00E+00**	**0.00E+00**

*Zeroes in this table indicates that no radioactivity was present at detectable levels. See Table 1-4 for typical minimum detectable concentrations.

Table 1-2B

Vogtle Electric Generating Plant

RADIOACTIVE EFFLUENT RELEASE REPORT - 2010

Liquid Effluents

Unit: 2

Starting: 1-Jan- 2010 Ending: 31-Dec-2010

		Batch Mode			
Nuclides Released	**Units**	**1ST Quarter**	**2ND Quarter**	**3RD Quarter**	**4TH Quarter**
Gross Alpha Radioactivity					
G-Alpha	**Curies**	**0.00E+00**	**1.02E-06**	**0.00E+00**	**2.00E-07**

Table 1-2B

Vogtle Electric Generating Plant

RADIOACTIVE EFFLUENT RELEASE REPORT - 2010

Liquid Effluents

Unit: 2

Starting: 1-Jan- 2010 Ending: 31-Dec-2010

		Continuous Mode			
Nuclides Released	**Units**	**1ST Quarter**	**2ND Quarter**	**3RD Quarter**	**4TH Quarter**
Fission & Activation Products					
Fe-55	Curies	0.00E+00	4.85E-03	0.00E+00	0.00E+00
Total For Period	**Curies**	**0.00E+00**	**4.85E-03**	**0.00E+00**	**0.00E+00**
Tritium					
H-3	Curies	3.14E-02	3.09E-02	7.84E-02	6.55E-02
Dissolved And Entrained Gases					
No Nuclides Found	Curies	0.00E+00	0.00E+00	0.00E+00	0.00E+00
Gross Alpha Radioactivity					
No Nuclides Found	Curies	0.00E+00	0.00E+00	0.00E+00	0.00E+00

Zeroes in this table indicates that no radioactivity was present at detectable levels.
See Table 1-4 for typical minimum detectable concentrations.

Table 1-2C

Vogtle Electric Generating Plant

RADIOACTIVE EFFLUENT RELEASE REPORT - 2010

Liquid Effluents
Unit: Site

Starting: 1-Jan- 2010 Ending: 31-Dec-2010

		Batch Mode			
Nuclides Released	**Units**	**1ST Quarter**	**2ND Quarter**	**3RD Quarter**	**4TH Quarter**
Fission & Activation Products					
Co-57	Curies	7.33E-06	0.00E+00	0.00E+00	8.84E-06
Co-58	Curies	3.94E-03	1.05E-03	1.05E-03	6.87E-04
Co-60	Curies	1.40E-03	3.66E-04	6.48E-04	7.68E-04
Cr-51	Curies	0.00E+00	0.00E+00	0.00E+00	1.46E-04
Fe-55	Curies	6.44E-03	8.25E-04	9.78E-04	1.31E-03
I-131	Curies	3.59E-04	8.89E-05	0.00E+00	1.43E-04
I-133	Curies	0.00E+00	0.00E+00	0.00E+00	3.88E-05
Mn-54	Curies	3.62E-05	2.28E-05	4.57E-05	1.79E-05
Nb-95	Curies	0.00E+00	8.21E-07	0.00E+00	0.00E+00
Sr-89	Curies	1.02E-03	7.14E-05	4.87E-06	0.00E+00
Sr-90	Curies	7.42E-05	5.12E-06	1.15E-06	0.00E+00
W-187	Curies	0.00E+00	0.00E+00	0.00E+00	2.06E-05
Ba-141	Curies	6.66E-05	0.00E+00	0.00E+00	0.00E+00
Cs-134	Curies	1.84E-05	4.54E-07	1.40E-05	2.76E-05
Cs-137	Curies	3.73E-04	3.03E-05	5.48E-05	5.98E-05
Eu-152	Curies	1.65E-05	0.00E+00	0.00E+00	2.65E-05
Sb-125	Curies	3.52E-03	8.75E-04	3.29E-03	6.91E-03
Tc-99M	Curies	0.00E+00	0.00E+00	0.00E+00	1.01E-05
Te-132	Curies	1.19E-05	0.00E+00	0.00E+00	0.00E+00
Te-125M	Curies	0.00E+00	1.33E-03	0.00E+00	0.00E+00
Total For Period	**Curies**	**1.73E-02**	**4.67E-03**	**6.09E-03**	**1.02E-02**
Tritium					
H-3	Curies	5.86E+02	1.06E+02	4.55E+01	1.65E+02

Zeroes in this table indicates that no radioactivity was present at detectable levels.

See Table 1-4 for typical minimum detectable concentrations.

Table 1-2C

Vogtle Electric Generating Plant

RADIOACTIVE EFFLUENT RELEASE REPORT - 2010

Liquid Effluents

Unit: Site

Starting: 1-Jan- 2010 Ending: 31-Dec-2010

		Batch Mode			
Nuclides Released	**Units**	**1ST Quarter**	**2ND Quarter**	**3RD Quarter**	**4TH Quarter**
Dissolved And Entrained Gases					
Kr-85M	Curies	1.09E-05	0.00E+00	0.00E+00	0.00E+00
Xe-133	Curies	5.90E-01	7.13E-04	0.00E+00	2.57E-03
Xe-135	Curies	7.64E-04	0.00E+00	0.00E+00	0.00E+00
Xe-131M	Curies	1.14E-02	4.29E-05	0.00E+00	0.00E+00
Xe-133M	Curies	3.53E-03	0.00E+00	0.00E+00	0.00E+00
Total For Period	**Curies**	**6.06E-01**	**7.56E-04**	**0.00E+00**	**2.57E-03**
Gross Alpha Radioactivity					
G-Alpha	Curies	6.46E-06	3.23E-06	0.00E+00	2.00E-07

Zeroes in this table indicates that no radioactivity was present at detectable levels.
See Table 1-4 for typical minimum detectable concentrations.

Table 1-2C

Vogtle Electric Generating Plant

RADIOACTIVE EFFLUENT RELEASE REPORT - 2010

Liquid Effluents

Unit: Site

Starting: 1-Jan- 2010 Ending: 31-Dec-2010

		Continuous Mode			
Nuclides Released	**Units**	**1ST Quarter**	**2ND Quarter**	**3RD Quarter**	**4TH Quarter**
Fission & Activation Products					
Fe-55	Curies	0.00E+00	1.37E-02	0.00E+00	0.00E+00
Total For Period	**Curies**	**0.00E+00**	**1.37E-02**	**0.00E+00**	**0.00E+00**
Tritium					
H-3	Curies	7.32E-02	1.14E-01	1.90E-01	1.34E-01
Dissolved And Entrained Gases					
No Nuclides Found	Curies	0.00E+00	0.00E+00	0.00E+00	0.00E+00
Gross Alpha Radioactivity					
No Nuclides Found	Curies	0.00E+00	0.00E+00	0.00E+00	0.00E+00

Zeroes in this table indicates that no radioactivity was present at detectable levels.
See Table 1-4 for typical minimum detectable concentrations.

Table 1-3A

Vogtle Electric Generating Plant

RADIOACTIVE EFFLUENT RELEASE REPORT - 2010

Doses to a member of the public due to Liquid Releases

Unit: 2

Starting: 1-Jan- 2010 Ending: 31-Dec-2010

Cumulative Doses per Quarter

Organ	ODCM	Units	1ST Qtr	% ODCM	2ND Qtr	% ODCM	3RD Qtr	% ODCM	4TH Qtr	% ODCM
Bone	5.00E+00	mRem	4.79E-03	9.57E-02	1.64E-03	3.29E-02	5.21E-04	1.04E-02	8.26E-04	1.65E-02
GI-Lli	5.00E+00	mRem	9.27E-03	1.85E-01	2.95E-03	5.90E-02	1.58E-03	3.17E-02	6.37E-03	1.27E-01
Kidney	5.00E+00	mRem	9.37E-03	1.87E-01	2.41E-03	4.81E-02	1.21E-03	2.43E-02	5.18E-03	1.04E-01
Liver	5.00E+00	mRem	1.13E-02	2.26E-01	3.19E-03	6.37E-02	1.67E-03	3.34E-02	5.91E-03	1.18E-01
Lung	5.00E+00	mRem	1.35E-02	2.69E-01	4.02E-03	8.05E-02	6.91E-03	1.38E-01	2.12E-02	4.24E-01
Thyroid	5.00E+00	mRem	8.78E-03	1.76E-01	2.13E-03	4.27E-02	9.89E-04	1.98E-02	5.06E-03	1.01E-01
Total Body	1.50E+00	mRem	1.08E-02	7.20E-01	2.50E-03	1.67E-01	1.48E-03	9.85E-02	5.63E-03	3.75E-01

Cumulative Doses per Year

Organ	ODCM	Units	Year to Ending Date	% ODCM	Receptor	Limit
Bone	1.00E+01	mRem	7.78E-03	7.78E-02	Maximum Individual Liquid	Liquid Effluent Organ Annual
GI-Lli	1.00E+01	mRem	2.02E-02	2.02E-01	Maximum Individual Liquid	Liquid Effluent Organ Annual
Kidney	1.00E+01	mRem	1.82E-02	1.82E-01	Maximum Individual Liquid	Liquid Effluent Organ Annual
Liver	1.00E+01	mRem	2.21E-02	2.21E-01	Maximum Individual Liquid	Liquid Effluent Organ Annual
Lung	1.00E+01	mRem	4.56E-02	4.56E-01	Maximum Individual Liquid	Liquid Effluent Organ Annual
Thyroid	1.00E+01	mRem	1.70E-02	1.70E-01	Maximum Individual Liquid	Liquid Effluent Organ Annual
Total Body	3.00E+00	mRem	2.04E-02	6.80E-01	Maximum Individual Liquid	Liquid Effluent TB Annual

Table 1-3B

Vogtle Electric Generating Plant

RADIOACTIVE EFFLUENT RELEASE REPORT - 2010

Doses to a member of the public due to Liquid Releases

Unit: 2

Starting: 1-Jan- 2010 Ending: 31-Dec-2010

Cumulative Doses per Quarter

Organ	ODCM	Units	1ST Qtr	% ODCM	2ND Qtr	% ODCM	3RD Qtr	% ODCM	4TH Qtr	% ODCM
Bone	5.00E+00	mRem	1.10E-03	2.20E-02	6.87E-04	1.37E-02	1.70E-05	3.40E-04	1.37E-06	2.73E-05
GI-Lli	5.00E+00	mRem	6.20E-03	1.24E-01	1.12E-03	2.24E-02	3.74E-04	7.48E-03	5.42E-05	1.08E-03
Kidney	5.00E+00	mRem	6.10E-03	1.22E-01	7.75E-04	1.55E-02	1.99E-04	3.99E-03	3.32E-05	6.64E-04
Liver	5.00E+00	mRem	6.82E-03	1.36E-01	1.25E-03	2.49E-02	2.02E-04	4.05E-03	3.41E-05	6.81E-04
Lung	5.00E+00	mRem	8.59E-03	1.72E-01	1.64E-03	3.28E-02	1.88E-03	3.75E-02	1.57E-04	3.13E-03
Thyroid	5.00E+00	mRem	5.93E-03	1.19E-01	8.30E-04	1.66E-02	1.99E-04	3.98E-03	3.31E-05	6.62E-04
Total Body	1.50E+00	mRem	6.48E-03	4.32E-01	8.89E-04	5.92E-02	2.06E-04	1.37E-02	3.45E-05	2.30E-03

Cumulative Doses per Year

Organ	ODCM	Units	Year to Ending Date	% ODCM	Receptor	Limit
Bone	1.00E+01	mRem	1.81E-03	1.81E-02	Maximum Individual Liquid	Liquid Effluent Organ Annual
GI-Lli	1.00E+01	mRem	7.75E-03	7.75E-02	Maximum Individual Liquid	Liquid Effluent Organ Annual
Kidney	1.00E+01	mRem	7.10E-03	7.10E-02	Maximum Individual Liquid	Liquid Effluent Organ Annual
Liver	1.00E+01	mRem	8.31E-03	8.31E-02	Maximum Individual Liquid	Liquid Effluent Organ Annual
Lung	1.00E+01	mRem	1.23E-02	1.23E-01	Maximum Individual Liquid	Liquid Effluent Organ Annual
Thyroid	1.00E+01	mRem	6.99E-03	6.99E-02	Maximum Individual Liquid	Liquid Effluent Organ Annual
Total Body	3.00E+00	mRem	7.61E-03	2.54E-01	Maximum Individual Liquid	Liquid Effluent TB Annual

Table 1-3C

Vogtle Electric Generating Plant

RADIOACTIVE EFFLUENT RELEASE REPORT - 2010

Doses to a member of the public due to Liquid Releases

Unit: Site

Starting: 1-Jan- 2010 Ending: 31-Dec-2010

Cumulative Doses per Quarter

Organ	ODCM	Units	1ST Qtr	% ODCM	2ND Qtr	% ODCM	3RD Qtr	% ODCM	4TH Qtr	% ODCM
Bone	5.00E+00	mRem	5.89E-03	1.18E-01	2.33E-03	4.66E-02	5.38E-04	1.08E-02	8.27E-04	1.65E-02
GI-Lli	5.00E+00	mRem	1.55E-02	3.10E-01	4.07E-03	8.14E-02	1.96E-03	3.92E-02	6.42E-03	1.28E-01
Kidney	5.00E+00	mRem	1.55E-02	3.09E-01	3.18E-03	6.36E-02	1.41E-03	2.82E-02	5.22E-03	1.04E-01
Liver	5.00E+00	mRem	1.81E-02	3.63E-01	4.43E-03	8.87E-02	1.87E-03	3.75E-02	5.94E-03	1.19E-01
Lung	5.00E+00	mRem	2.21E-02	4.41E-01	5.67E-03	1.13E-01	8.79E-03	1.76E-01	2.14E-02	4.27E-01
Thyroid	5.00E+00	mRem	1.47E-02	2.94E-01	2.97E-03	5.93E-02	1.19E-03	2.38E-02	5.09E-03	1.02E-01
Total Body	1.50E+00	mRem	1.73E-02	1.15E+00	3.39E-03	2.26E-01	1.68E-03	1.12E-01	5.66E-03	3.78E-01

Cumulative Doses per Year

Organ	ODCM	Units	Year to Ending	% ODCM	Receptor	Limit
Bone	1.00E+01	mRem	9.58E-03	9.58E-02	Maximum Individual Liquid	Liquid Effluent Organ Annual
GI-Lli	1.00E+01	mRem	2.79E-02	2.79E-01	Maximum Individual Liquid	Liquid Effluent Organ Annual
Kidney	1.00E+01	mRem	2.53E-02	2.53E-01	Maximum Individual Liquid	Liquid Effluent Organ Annual
Liver	1.00E+01	mRem	3.04E-02	3.04E-01	Maximum Individual Liquid	Liquid Effluent Organ Annual
Lung	1.00E+01	mRem	5.79E-02	5.79E-01	Maximum Individual Liquid	Liquid Effluent Organ Annual
Thyroid	1.00E+01	mRem	2.40E-02	2.40E-01	Maximum Individual Liquid	Liquid Effluent Organ Annual
Total Body	3.00E+00	mRem	2.80E-02	9.34E-01	Maximum Individual Liquid	Liquid Effluent TB Annual

Table 1-4

Vogtle Electric Generating Plant
RADIOACTIVE EFFLUENT RELEASE REPORT - 2010
MINIMUM DETECTABLE CONCENTRATIONS – LIQUID SAMPLE ANALYSES

Starting: 1-Jan-2010 Ending: 31-Dec-2010

The values in this table represent a priori Minimum Detectable Concentrations (MDC) that are typically achieved in laboratory analyses of liquid radwaste samples.

RADIONUCLIDE	MDC	UNITS
Mn-54	2.73E-08	µCi/ml
Fe-59	8.33E-08	µCi/ml
Co-58	3.78E-08	µCi/ml
Co-60	6.76E-08	µCi/ml
Zn-65	1.32E-07	µCi/ml
Mo-99	4.31E-07	µCi/ml
Cs-134	3.06E-08	µCi/ml
Cs-137	4.51E-08	µCi/ml
Ce-141	6.99E-08	µCi/ml
Ce-144	2.95E-07	µCi/ml
I-131	5.97E-08	µCi/ml
Xe-133	9.11E-08	µCi/ml
Xe-135	4.27E-08	µCi/ml
Fe-55	1.00E-06	µCi/ml
Sr-89	5.00E-08	µCi/ml
Sr-90	7.00E-09	µCi/ml
H-3	2.00E-06	µCi/ml
Gross Alpha	7.00E-08	µCi/ml

Table 1-5A

Vogtle Electric Generating Plant

RADIOACTIVE EFFLUENT RELEASE REPORT - 2010

Liquid Effluents - Batch Release Summary

Unit: 1

Starting: 1-Jan- 2010 Ending: 31-Dec-2010

Liquid Releases	Units	1ST Quarter	2ND Quarter	3RD Quarter	4TH Quarter	Year Totals
1. Number of batch releases		23	15	12	16	66
2. Total time period for Batch releases	(Minutes)	5.28E+03	2.75E+03	1.98E+03	5.32E+03	1.53E+04
3. Maximum time period for a batch	(Minutes)	3.67E+02	3.49E+02	2.75E+02	8.76E+02	8.76E+02
4. Average time period for a batch	(Minutes)	2.30E+02	1.83E+02	1.65E+02	3.32E+02	2.32E+02
5. Minimum time period for a batch	(Minutes)	5.70E+01	6.10E+01	6.00E+01	5.50E+01	5.50E+01
6. Average stream flow during periods of release of liquid effluent into a flowing stream *	(CFS)	19,898	8,134	6,415	5,218	9,911

*Average river flowrate taken from USGS Monitoring Station 02197500, Savannah River at Burton's Ferry Bridge near Millhaven, Ga. 32 miles downstream of Plant Vogtle.

Table 1-5B

Vogtle Electric Generating Plant

RADIOACTIVE EFFLUENT RELEASE REPORT - 2010

Liquid Effluents - Batch Release Summary

Unit: 2

Starting: 1-Jan- 2010 Ending: 31-Dec-2010

Liquid Releases	Units	1ST Quarter	2ND Quarter	3RD Quarter	4TH Quarter	Year Totals
1. Number of batch releases		9	4	2	1	16
2. Total time period for Batch releases	(Minutes)	2.66E+03	1.10E+03	3.51E+02	6.60E+01	4.18E+03
3. Maximum time period for a batch	(Minutes)	3.72E+02	3.40E+02	2.69E+02	6.60E+01	3.72E+02
4. Average time period for a batch	(Minutes)	2.96E+02	2.75E+02	1.76E+02	6.60E+01	2.61E+02
5. Minimum time period for a batch	(Minutes)	1.65E+02	2.22E+02	8.20E+01	6.60E+01	6.60E+01
6. Average stream flow during periods of release of liquid effluent into a flowing stream *	(CFS)	19,898	8,134	6,415	5,218	9,911

*Average river flowrate taken from USGS Monitoring Station 02197500, Savannah River at Burton's Ferry Bridge near Millhaven, Ga. 32 miles downstream of Plant Vogtle.

Table 1-5C

Vogtle Electric Generating Plant

RADIOACTIVE EFFLUENT RELEASE REPORT - 2010

Liquid Effluents - Batch Release Summary

Unit: Site

Starting: 1-Jan- 2010 Ending: 31-Dec-2010

Liquid Releases	Units	1ST Quarter	2ND Quarter	3RD Quarter	4TH Quarter	Year Totals
1. Number of batch releases		32	19	14	17	82
2. Total time period for Batch releases	(Minutes)	7.94E+03	3.85E+03	2.33E+03	5.38E+03	1.95E+04
3. Maximum time period for a batch	(Minutes)	3.72E+02	3.49E+02	2.75E+02	8.76E+02	8.76E+02
4. Average time period for a batch	(Minutes)	2.48E+02	2.02E+02	1.66E+02	3.17E+02	2.38E+02
5. Minimum time period for a batch	(Minutes)	5.70E+01	6.10E+01	6.00E+01	5.50E+01	5.50E+01
6. Average stream flow during periods of release of liquid effluent into a flowing stream*	(CFS)	19,898	8,134	6,415	5,218	9,911

*Average river flowrate taken from USGS Monitoring Station 02197500, Savannah River at Burton's Ferry Bridge near Millhaven, Ga. 32 miles downstream of Plant Vogtle.

Table 1-6A

Vogtle Electric Generating Plant

RADIOACTIVE EFFLUENT RELEASE REPORT - 2010

Liquid Effluents - Abnormal Release Summary

Unit: 1

Starting: 1-Jan- 2010 Ending: 31-Dec-2010

Liquid Releases	Units	1ST Quarter	2ND Quarter	3RD Quarter	4TH Quarter	Year Totals
1. Number of Releases		0	0	0	0	0
2. Total Time For All Releases	(Minutes)	0.00E+00	0.00E+00	0.00E+00	0.00E+00	0.00E+00
3. Maximum Time For A Release	(Minutes)	0.00E+00	0.00E+00	0.00E+00	0.00E+00	0.00E+00
4. Average Time For A Release	(Minutes)	0.00E+00	0.00E+00	0.00E+00	0.00E+00	0.00E+00
5. Minimum Time For A Release	(Minutes)	0.00E+00	0.00E+00	0.00E+00	0.00E+00	0.00E+00
6. Total activity for all releases	(Curies)	0.00E+00	0.00E+00	0.00E+00	0.00E+00	0.00E+00

Table 1-6B

Vogtle Electric Generating Plant

RADIOACTIVE EFFLUENT RELEASE REPORT - 2010

Liquid Effluents - Abnormal Release Summary

Unit: 2

Starting: 1-Jan- 2010 Ending: 31-Dec-2010

Liquid Releases	Units	1ST Quarter	2ND Quarter	3RD Quarter	4TH Quarter	Year Totals
1. Number of Releases		0	0	0	0	0
2. Total Time For All Releases	(Minutes)	0.00E+00	0.00E+00	0.00E+00	0.00E+00	0.00E+00
3. Maximum Time For A Release	(Minutes)	0.00E+00	0.00E+00	0.00E+00	0.00E+00	0.00E+00
4. Average Time For A Release	(Minutes)	0.00E+00	0.00E+00	0.00E+00	0.00E+00	0.00E+00
5. Minimum Time For A Release	(Minutes)	0.00E+00	0.00E+00	0.00E+00	0.00E+00	0.00E+00
6. Total activity for all releases	(Curies)	0.00E+00	0.00E+00	0.00E+00	0.00E+00	0.00E+00

Table 1-6C

Vogtle Electric Generating Plant

RADIOACTIVE EFFLUENT RELEASE REPORT - 2010

Liquid Effluents - Abnormal Release Summary

Unit: Site

Starting: 1-Jan- 2010 Ending: 31-Dec-2010

Liquid Releases	Units	1ST Quarter	2ND Quarter	3RD Quarter	4TH Quarter	Year Totals
1. Number of Releases		0	0	0	0	0
2. Total Time For All Releases	(Minutes)	0.00E+00	0.00E+00	0.00E+00	0.00E+00	0.00E+00
3. Maximum Time For A Release	(Minutes)	0.00E+00	0.00E+00	0.00E+00	0.00E+00	0.00E+00
4. Average Time For A Release	(Minutes)	0.00E+00	0.00E+00	0.00E+00	0.00E+00	0.00E+00
5. Minimum Time For A Release	(Minutes)	0.00E+00	0.00E+00	0.00E+00	0.00E+00	0.00E+00
6. Total activity for all releases	(Curies)	0.00E+00	0.00E+00	0.00E+00	0.00E+00	0.00E+00

2.0 Gaseous Effluents

2.1 Regulatory Requirements

The ODCM Specifications presented in this section are for Unit 1 and Unit 2.

2.1.1 Dose Rate Limits

The dose rate due to radioactive materials released in gaseous effluents from the site to areas at and beyond the SITE BOUNDARY shall be limited to the following:

a. For noble gases, Less than or equal to 500 mrems/yr. to the whole body and less than or equal to 3000 mrems/yr. to the skin and,

b. For Iodine-131, for Iodine-133, for tritium and for all radionuclides in particulate form with half lives greater than 8 days: Less than or equal to 1500 mrems/yr. to any organ.

2.1.2 Air Doses Due to Noble Gases in Gaseous Releases

The air dose due to noble gases released in gaseous effluents, from each unit, to areas at and beyond the SITE BOUNDARY shall be limited to the following:

a. During any calendar quarter: Less than or equal to 5 mrads for gamma radiation and less than or equal to 10 mrads for beta radiation, and

b. During any calendar year: Less than or equal to 10 mrads for gamma radiation and less than or equal to 20 mrads for beta radiation.

2.1.3 Doses to a Member of the Public

The dose to a MEMBER OF THE PUBLIC from Iodine-131, Iodine-133, tritium and all radionuclides in particulate form with half-lives greater than 8 days in gaseous effluents released, from each unit, to areas at and beyond the SITE BOUNDARY shall be limited to the following.

a. During any calendar quarter: Less than or equal to 7.5 mrems to any organ.

b. During any calendar year: Less than or equal to 15 mrems to any organ.

2.2 Measurements and Approximations of Total Radioactivity

2.2.1 Sample Collection and Analysis

Gaseous Effluents at the Vogtle Electric Generating Plant are currently confined to five paths: plant vents (Unit 1 and Unit 2), the condenser air ejector, the steam packing exhauster systems (Unit 1 and Unit 2), and the Radwaste Processing Facility.

Waste gas decay tanks are batch released through the Unit 1 plant vent. The containment purges are released through their respective plant vents. Containment atmosphere is also released via the containment equipment hatch during periods when the equipment hatch is open with containment purge/vent being stopped. Approval was granted by the NRC to open the equipment hatch during fuel movement; a release perrnit is generated when the equipment hatch is opened and the containment exhaust fan is not discharging to the plant vent. Any detected activity in the containment equipment hatch permit is included in the Ground Release Table of the effluent report.

All of the paths with the exception of the RPF can be continuously monitored for gaseous radioactivity. The RPF is equipped with an integrated-type sample collection device for collecting particulates. Plant vent, containment, steam jet air ejector, steam-packing exhauster are equipped with an integrated-type sample collection device for collecting particulates and iodines. During this reporting period, there were no continuous radioactive releases through the condenser air ejector and the steam packing exhauster system vents. Batch Waste Gas Decay Tank releases are analyzed for noble gases before each release. The containment atmosphere is analyzed for noble gases prior to each release and for tritium at least on a monthly basis.

Sample analyses results and release flow rates form the basis for calculating released quantities of radionuclide specific radioactivity, dose rates associated with gaseous releases, and cumulative doses for the current quarter and year.

With each release period and batch release, radioactivity, dose rates, and cumulative doses are calculated. Cumulative dose results are tabulated, along with the percent of the ODCM limits for each release for the current quarter and year.

Typically achieved minimum detectable concentrations for gaseous effluent sample analyses are reported in Table 2-6.

2.2.2 Total Quantities of Radioactivity, Dose Rates, and Cumulative Doses

The methods for determining release quantities of radioactivity, dose rates, and cumulative doses are as follows:

2.2.2.1 Fission and Activation Gases

The released radioactivity is determined from sample analyses results collected as described above and average release flow rates over the period represented by the collected sample. Dose rates due to noble gases, radioiodines, tritium, and particulates are calculated. Calculated dose rates are compared to the dose rate limits specified in ODCM 3.1.2 for noble gases, radioiodines, tritium, and particulates. Dose rate calculation methodology is presented in the ODCM.

Beta and gamma air doses due to noble gases are calculated for the location in the unrestricted area with the potential for the highest exposure due to gaseous releases. Air doses are calculated for each release period and cumulative totals are kept for each unit for the calendar quarter and year. Cumulative air doses are compared with the dose limits specified in ODCM 3.1.3. Current percent of the ODCM limits are shown on the printout for each release period. Air dose calculation methodology is presented in the ODCM.

2.2.2.2 Radioiodines, Tritium and Particulate Releases

The released quantities of radioiodines, tritium and particulates are determined using the weekly samples and release flow rates for the two plant vent release points.

After each quarter, the particulate filters from each plant vent are combined, for strontium analysis. Strontium concentrations are input to the composite file of the computer to be used for release dose rate and individual dose calculations.

Doses to a Member of the Public due to radioiodines, tritium and particulates are calculated for the controlling receptor, which is described in Table 3-7of the ODCM. Doses are calculated for each release period, and cumulative totals are kept for each unit for the current calendar quarter and year. Cumulative doses are compared to the dose limits specified in ODCM 3.1.4.

Current percent of ODCM limits are shown in this report for each release period.

2.2.2.3 Gross Alpha Release

The gross alpha release is calculated each month by counting the particulate filters for each week for gross alpha activity. The four or five weeks' numbers are then recorded on a data sheet and the activity is summed at the end of the month. This concentration is used for release calculations.

2.2.3 Total Error Estimation

The total or maximum error associated with the effluent measurement will include the cumulative errors resulting from the total operation of sampling and measurement. Because it may be very difficult to assign error terms for each parameter affecting the final measurement, detailed statistical evaluation of error are not suggested.
The objective should be to obtain an overall estimate of the error associated with measurements of radioactive materials released in liquid and gaseous effluents and solid waste.

Estimated errors are based on errors in counting equipment calibration, counting statistics, vent-flow rates, vent sample flow rates, non-steady release rates, chemical yield factors, and sample losses for such items as charcoal cartridges.

a. Fission and activation total release was calculated from sample analysis results and release point flow rates.

Sampling and statistical error in counting	10%
Counting equipment calibration	10%
Vent flow Rates	10%
Non-steady release rates	20%
TOTAL ERROR	26.5%

b. I-131 releases were calculated from each weekly sample:

Statistical error in counting	10%
Counting equipment calibration	10%
Vent Flow Rates	10%
Vent Sample Flow Rates	50%
Non-Steady release rates	10%
Losses from charcoal cartridges	10%
TOTAL ERROR	55%

c. Particulates with half-lives greater than 8 day releases were calculated from sample and analysis results and release point flow rates.

Statistical error at MDC concentration	10%
Counting equipment calibration	10%
Vent flow rates	10%
Vent sample flow rates	50%
Non steady release rates	10%
TOTAL ERROR	54%

2.2.3 Total Error Estimation cont'd

d. Total tritium releases were calculated from sample analysis results and release point flow rates.

Water vapor in sample stream determination	10%
Vent flow rates	10%
Counting calibration and statistics	10%
Non-steady release rates	10%
TOTAL ERROR	20%

e. Gross Alpha radioactivity was calculated from sample analysis results and release point flow rates.

Statistical error at MDC concentration	10%
Counting equipment calibration	10%
Vent flow rates	10%
Vent sample flow rates	50%
Non Steady release rates	10%
TOTAL ERROR	55%

2.3 Gaseous Effluent Release Data

Regulatory Guide 1.21 Tables 1A, 1B, and 1C are found in this report as Tables 2-1A, 2-1B, 2-1C, 2-2A, 2-2B, 2-2C, 2-3A, 2-3B, and 2-3C. Data are presented on a quarterly basis as required by Regulatory Guide 1.21.

To complete table 2-1A, and 2-1B, the total release for each of the four categories (fission and activation gases, iodines, particulates, and tritium) was divided by the number of seconds in the quarter to obtain a release rate in μCi/second for each category. However, the percent of the ODCM limits are not applicable because VEGP has no curie limits for gaseous releases. Applicable limits are expressed in terms of dose. Noble gases are limited as specified in ODCM 3.1.2. The other three categories (tritium, radioiodines, and particulates) are limited as a group as specified in ODCM 3.1.2.

Dose rates due to noble gas releases and due to radioiodines, tritium, and particulate releases were calculated as part of the pre-release and post-release permits. No limits were exceeded for this reporting period.

Gross alpha radioactivity is reported in Table 2-1A, and 2-1B as curies released in each quarter.

Limits for cumulative beta and gamma air doses due to noble gases are specified in ODCM 3.1.3. Cumulative air doses are presented in Table 2-4A, and 2-4B along with the percent of the ODCM limits.

Limits for cumulative doses to a Member of the Public due to radioiodines, tritium and particulates, are specified in ODCM 3.1.4. Cumulative doses to a Member of the Public are presented in Table 2-5A, and 2-5B along with percent of ODCM limits.

2.4 Radiological Impact Due to Gaseous Releases

Dose rates due to the release of noble gases were calculated for the site in accordance with ODCM 3.4.1.1. Dose rates due to radioiodines, tritium, and particulates in gaseous releases were calculated in accordance with ODCM 3.4.1.2.

Dose rates were calculated as part of pre-release and post release permits, no limits were exceeded for this reporting period.

Cumulative air doses due to noble gas releases were calculated for each unit in accordance with ODCM 3.4.2. These results are presented in Tables 2-4A and 2-4B.

Cumulative doses to a Member of the Public were calculated for each unit in accordance with ODCM 3.4.3. These results are presented in Tables 2-5A and 2-5B.

Dose rates and doses were calculated using the methodology presented in the Vogtle Electric Generating Plant Offsite Dose Calculation Manual.

2.5 Gaseous Effluents - Batch Releases

Other data pertinent to batch releases of radioactive gaseous effluent from Unit 1 and Unit 2 are listed in Table 2-7A and 2-7B.

2.6 Gaseous Effluents - Abnormal Releases

There was one abnormal release during this period.

On 10/12/2010, after reviewing Waste Gas Decay Tank pressures, an Operator found that the in service tank GDT #2 pressure had lowered from the day shift to the night shift round by 25 psig after isolation. HP/Chemistry review of the Unit 2 Plant Vent Monitor trends show that radiation levels increased when Waste Gas was placed on recirculation and levels decreased after closure of the flow path. Even though the levels were elevated, the entire release was monitored out of the plant vent stack. Furthermore, none of the radiation monitors for this flow path went into alarm at the time of the release nor subsequently. The Operators were directed to shutdown Waste Gas Processing to allow Chemistry to obtain a sample.

Waste Gas Decay Tank #2 was sampled on 10/12/2010 at 0455. Release permit G-20101011-281-B was generated to account for this unplanned release. There

were no limits exceeded and there was no reason for the NRC to be not notified. The duration of this release was 355 minutes, from 10/11/2010 at 1750 to 10/11/2010 at 2345. A volume of 1.02E+03 ft^3 was released.

The release was attributed to two factors: 1) A diaphragm valve (21902U4162) was not fully closed during recirculation of a waste gas decay tank because of the travel stop repositioning over time. Travel stop drift is common in high vibration systems for this model of Hills-McCanna diaphragm valve 2) The gas trap for a phase separator did not function properly.

Remedial actions include (1) reevaluating the manufacturer's suggestion not to perform maintenance the Hills-McCanna diaphragm valve, (2) re-adjusting the diaphragm valve to close completely, (3) revising procedures to address the repositioning of travel stops for diaphragm valves over time, (4) using a medium strength "thread locker" that is more suitable for the size of the travel stop bolt, it will prevent innate travel stop repositioning while allowing for readjustment without a special tool (5) additionally, a step should will be included to match mark the valve stem after performance of the travel stop repositioning section.

The system operating procedure will be changed to provide an adequate warning of gas trap design and installation shortcomings, refurbish the Armstrong gas trap 21902Z6003.

RADIONUCLIDES RELEASED:

Radionuclide Released	Estimated Activity (μCi/cc)
Kr-85	1.88E-02
Xe-135m	7.54E-04
Xe-133	5.51E-02
Xe-133m	4.72E-04
TOTAL	7.51E-02

There was no calculated dose to the public as a result of this release.

Table 2-1A

Vogtle Electric Generating Plant

RADIOACTIVE EFFLUENT RELEASE REPORT - 2010

Gaseous Effluents - Summation Of All Releases

Unit: 1

Starting: 1-Jan- 2010 Ending: 31-Dec-2010

Type of Effluent	Units	1ST Quarter	2ND Quarter	3RD Quarter	4TH Quarter
A. Fission And Activation Gases					
1. Total Release	Curies	1.00E-01	1.46E-01	6.81E-01	5.66E-02
2. Average Release rate for period	uCi/sec	1.27E-02	1.85E-02	8.63E-02	7.18E-03
3. Percent of Applicable Limit	%	*	*	*	*
B. Radioiodines					
1. Total Iodine-131	Curies	7.13E-06	0.00E+00	0.00E+00	0.00E+00
2. Average Release rate for period	uCi/sec	9.05E-07	0.00E+00	0.00E+00	0.00E+00
3. Percent of Applicable Limit	%	*	*	*	*
C. Particulates					
1. Particulates (Half-Lives > 8	Curies	7.47E-08	9.73E-08	1.47E-07	1.31E-07
2. Average Release rate for period	uCi/sec	9.47E-09	1.23E-08	1.87E-08	1.658E-08
3. Percent of Applicable Limit	%	*	*	*	*
D. Tritium					
1. Total Release	Curies	4.85E+00	3.27E+00	7.76E+00	3.46E+00
2. Average Release rate for period	uCi/sec	6.16E-01	4.14E-01	9.84E-01	4.38E-01
3. Percent of Applicable Limit	%	*	*	*	*
E. Gross Alpha					
1. Total Release	Curies	0.00E+00	0.00E+00	0.00E+00	0.00E+00
2. Average Release rate for period	uCi/sec	0.00E+00	0.00E+00	0.00E+00	0.00E+00

* Applicable limits are expressed in terms of dose. See Tables 2-4A, 2-4B, 2-5A, 2-5B of this report.

Table 2-1B

Vogtle Electric Generating Plant

RADIOACTIVE EFFLUENT RELEASE REPORT - 2010

Gaseous Effluents - Summation Of All Releases

Unit: 2

Starting: 1-Jan- 2010 Ending: 31-Dec-2010

Type of Effluent	Units	1ST Quarter	2ND Quarter	3RD Quarter	4TH Quarter
A. Fission And Activation Gases					
1. Total Release	Curies	1.92E+02	5.96E+00	6.77E+00	1.19E+01
2. Average Release rate for period	uCi/sec	2.44E+01	7.57E-01	8.58E-01	1.51E+00
3. Percent of Applicable Limit	%	*	*	*	*
B. Radioiodines					
1. Total Iodine-131	Curies	4.41E-04	0.00E+00	0.00E+00	0.00E+00
2. Average Release rate for period	uCi/sec	5.59E-05	0.00E+00	0.00E+00	0.00E+00
3. Percent of Applicable Limit	%	*	*	*	*
C. Particulates					
1. Particulates (Half-Lives > 8	Curies	6.51E-08	1.54E-08	0.00E+00	0.00E+00
2. Average Release rate for period	uCi/sec	8.26E-09	1.96E-09	0.00E+00	0.000E+00
3. Percent of Applicable Limit	%	*	*	*	*
D. Tritium					
1. Total Release	Curies	7.22E+00	5.16E+00	2.84E+00	1.13E+00
2. Average Release rate for period	uCi/sec	9.16E-01	6.55E-01	3.60E-01	1.43E-01
3. Percent of Applicable Limit	%	*	*	*	*
E. Gross Alpha					
1. Total Release	Curies	0.00E+00	0.00E+00	0.00E+00	0.00E+00
2. Average Release rate for period	uCi/sec	0.00E+00	0.00E+00	0.00E+00	0.00E+00

* Applicable limits are expressed in terms of dose. See Tables 2-4A, 2-4B, 2-5A, 2-5B of this report.

Table 2-1C

Vogtle Electric Generating Plant

RADIOACTIVE EFFLUENT RELEASE REPORT - 2010

Gaseous Effluents - Summation Of All Releases

Unit: Site

Starting: 1-Jan- 2010 Ending: 31-Dec-2010

Type of Effluent	Units	1ST Quarter	2ND Quarter	3RD Quarter	4TH Quarter
A. Fission And Activation Gases					
1. Total Release	Curies	1.92E+02	6.11E+00	7.45E+00	1.20E+01
2. Average Release rate for period	uCi/sec	2.44E+01	7.75E-01	9.45E-01	1.52E+00
3. Percent of Applicable Limit	%	*	*	*	*
B. Radioiodines					
1. Total Iodine-131	Curies	4.48E-04	0.00E+00	0.00E+00	0.00E+00
2. Average Release rate for period	uCi/sec	5.68E-05	0.00E+00	0.00E+00	0.00E+00
3. Percent of Applicable Limit	%	*	*	*	*
C. Particulates					
1. Particulates (Half-Lives > 8	Curies	1.40E-07	1.13E-07	1.47E-07	1.31E-07
2. Average Release rate for period	uCi/sec	1.77E-08	1.43E-08	1.87E-08	1.658E-08
3. Percent of Applicable Limit	%	*	*	*	*
D. Tritium					
1. Total Release	Curies	1.21E+01	8.43E+00	1.06E+01	4.58E+00
2. Average Release rate for period	uCi/sec	1.53E+00	1.07E+00	1.34E+00	5.81E-01
3. Percent of Applicable Limit	%	*	*	*	*
E. Gross Alpha					
1. Total Release	Curies	0.00E+00	0.00E+00	0.00E+00	0.00E+00
2. Average Release rate for period	uCi/sec	0.00E+00	0.00E+00	0.00E+00	0.00E+00

* Applicable limits are expressed in terms of dose. See Tables 2-4A, 2-4B, 2-5A, 2-5B of this report.

Table 2-2A

Vogtle Electric Generating Plant

RADIOACTIVE EFFLUENT RELEASE REPORT - 2010

Gaseous Effluents - Mixed Mode Level Releases

Unit: 1

Starting: 1-Jan- 2010 Ending: 31-Dec-2010

		Continuous Mode			
Nuclides Released	**Units**	**1ST Quarter**	**2ND Quarter**	**3RD Quarter**	**4TH Quarter**
Fission Gases					
No Nuclides Found	Curies	0.00E+00	0.00E+00	0.00E+00	0.00E+00
Iodines					
I-131	Curies	7.13E-06	0.00E+00	0.00E+00	0.00E+00
I-133	Curies	2.81E-05	0.00E+00	0.00E+00	0.00E+00
I-135	Curies	3.79E-05	0.00E+00	0.00E+00	0.00E+00
Total For Period	**Curies**	**7.31E-05**	**0.00E+00**	**0.00E+00**	**0.00E+00**
Particulates					
Sr-89	Curies	0.00E+00	0.00E+00	8.04E-08	1.31E-07
Sr-90	Curies	7.47E-08	9.73E-08	6.69E-08	0.00E+00
Total For Period	**Curies**	**7.47E-08**	**9.73E-08**	**1.47E-07**	**1.31E-07**
Tritium					
H-3	Curies	4.74E+00	2.77E+00	3.18E+00	3.20E+00
Gross Alpha					
No Nuclides Found	Curies	0.00E+00	0.00E+00	0.00E+00	0.00E+00

If Not Detected, Nuclide is Not Reported. Zeroes in this table indicates that no radioactivity was present at detectable levels. See Table 2-6 for typical minimum detectable concentrations.

Table 2-2A

Vogtle Electric Generating Plant

RADIOACTIVE EFFLUENT RELEASE REPORT - 2010

Gaseous Effluents - Mixed Mode Level Releases

Unit: 1

Starting: 1-Jan- 2010 Ending: 31-Dec-2010

		Batch Mode			
Nuclides Released	**Units**	**1ST Quarter**	**2ND Quarter**	**3RD Quarter**	**4TH Quarter**
Fission Gases					
Ar-41	Curies	9.96E-02	1.41E-01	6.81E-01	5.56E-02
Xe-133	Curies	7.26E-04	4.90E-03	1.05E-04	1.03E-03
Total For Period	**Curies**	**1.00E-01**	**1.46E-01**	**6.81E-01**	**5.66E-02**
Iodines					
No Nuclides Found	Curies	0.00E+00	0.00E+00	0.00E+00	0.00E+00
Particulates					
No Nuclides Found	Curies	0.00E+00	0.00E+00	0.00E+00	0.00E+00
Tritium					
H-3	Curies	1.12E-01	5.00E-01	4.58E+00	2.58E-01
Gross Alpha					
No Nuclides Found	Curies	0.00E+00	0.00E+00	0.00E+00	0.00E+00

Table 2-2B

Vogtle Electric Generating Plant

RADIOACTIVE EFFLUENT RELEASE REPORT - 2010

Gaseous Effluents - Mixed Mode Level Releases

Unit: 2

Starting: 1-Jan- 2010 Ending: 31-Dec-2010

		Continuous Mode			
Nuclides Released	**Units**	**1ST Quarter**	**2ND Quarter**	**3RD Quarter**	**4TH Quarter**
Fission Gases					
Kr-85M	Curies	8.29E-01	0.00E+00	0.00E+00	0.00E+00
Xe-133	Curies	3.21E+01	0.00E+00	0.00E+00	0.00E+00
Xe-135	Curies	3.41E+00	0.00E+00	0.00E+00	0.00E+00
Total For Period	**Curies**	**3.64E+01**	**0.00E+00**	**0.00E+00**	**0.00E+00**
Iodines					
I-131	Curies	7.59E-06	0.00E+00	0.00E+00	0.00E+00
Total For Period	**Curies**	**7.59E-06**	**0.00E+00**	**0.00E+00**	**0.00E+00**
Particulates					
Sr-89	Curies	4.62E-08	0.00E+00	0.00E+00	0.00E+00
Sr-90	Curies	1.89E-08	1.54E-08	0.00E+00	0.00E+00
Total For Period	**Curies**	**6.51E-08**	**1.54E-08**	**0.00E+00**	**0.00E+00**
Tritium					
H-3	Curies	6.16E+00	4.27E+00	1.58E+00	0.00E+00
Gross Alpha					
No Nuclides Found	Curies	0.00E+00	0.00E+00	0.00E+00	0.00E+00

If Not Detected, Nuclide is Not Reported. Zeroes in this table indicates that no radioactivity was present at detectable levels.
See Table 2-6 for typical minimum detectable concentrations.

Table 2-2B

Vogtle Electric Generating Plant

RADIOACTIVE EFFLUENT RELEASE REPORT - 2010

Gaseous Effluents - Mixed Mode Level Releases

Unit: 2

Starting: 1-Jan- 2010 Ending: 31-Dec-2010

		Batch Mode			
Nuclides Released	**Units**	**1ST Quarter**	**2ND Quarter**	**3RD Quarter**	**4TH Quarter**
Fission Gases					
Ar-41	Curies	1.46E+00	1.28E+00	6.77E-01	8.50E-01
Kr-85	Curies	0.00E+00	0.00E+00	0.00E+00	5.43E-01
Xe-131M	Curies	2.21E+00	0.00E+00	0.00E+00	2.18E-02
Xe-133M	Curies	1.91E+00	0.00E+00	2.15E-02	4.79E-02
Xe-133	Curies	1.40E+02	4.46E+00	5.84E+00	1.03E+01
Xe-135	Curies	3.78E-01	2.19E-01	2.23E-01	1.58E-01
Total For Period	**Curies**	**1.46E+02**	**5.96E+00**	**6.77E+00**	**1.19E+01**
Iodines					
I-131	Curies	2.37E-04	0.00E+00	0.00E+00	0.00E+00
Total For Period	**Curies**	**2.37E-04**	**0.00E+00**	**0.00E+00**	**0.00E+00**
Particulates					
No Nuclides Found	Curies	0.00E+00	0.00E+00	0.00E+00	0.00E+00
Tritium					
H-3	Curies	9.55E-01	8.90E-01	1.26E+00	1.13E+00
Gross Alpha					
No Nuclides Found	Curies	0.00E+00	0.00E+00	0.00E+00	0.00E+00

Table 2-2C

Vogtle Electric Generating Plant

RADIOACTIVE EFFLUENT RELEASE REPORT - 2010

Gaseous Effluents - Mixed Mode Level Releases

Unit: Site

Starting: 1-Jan- 2010 Ending: 31-Dec-2010

		Continuous Mode			
Nuclides Released	**Units**	**1ST Quarter**	**2ND Quarter**	**3RD Quarter**	**4TH Quarter**
Fission Gases					
Kr-85M	Curies	8.29E-01	0.00E+00	0.00E+00	0.00E+00
Xe-133	Curies	3.21E+01	0.00E+00	0.00E+00	0.00E+00
Xe-135	Curies	3.41E+00	0.00E+00	0.00E+00	0.00E+00
Total For Period	**Curies**	**3.64E+01**	**0.00E+00**	**0.00E+00**	**0.00E+00**
Iodines					
I-131	Curies	1.47E-05	0.00E+00	0.00E+00	0.00E+00
I-133	Curies	2.81E-05	0.00E+00	0.00E+00	0.00E+00
I-135	Curies	3.79E-05	0.00E+00	0.00E+00	0.00E+00
Total For Period	**Curies**	**8.07E-05**	**0.00E+00**	**0.00E+00**	**0.00E+00**
Particulates					
Sr-89	Curies	4.62E-08	0.00E+00	8.04E-08	1.31E-07
Sr-90	Curies	9.36E-08	1.13E-07	6.69E-08	0.00E+00
Total For Period	**Curies**	**1.40E-07**	**1.13E-07**	**1.47E-07**	**1.31E-07**
Tritium					
H-3	Curies	1.09E+01	7.04E+00	4.75E+00	3.20E+00
Gross Alpha					
No Nuclides Found	Curies	0.00E+00	0.00E+00	0.00E+00	0.00E+00

If Not Detected, Nuclide is Not Reported. Zeroes in this table indicates that no radioactivity was present at detectable levels.
See Table 2-6 for typical minimum detectable concentrations.

Table 2-2C

Vogtle Electric Generating Plant

RADIOACTIVE EFFLUENT RELEASE REPORT - 2010

Gaseous Effluents - Mixed Mode Level Releases

Unit: Site

Starting: 1-Jan- 2010 Ending: 31-Dec-2010

		Batch Mode			
Nuclides Released	**Units**	**1ST Quarter**	**2ND Quarter**	**3RD Quarter**	**4TH Quarter**
Fission Gases					
Ar-41	Curies	1.56E+00	1.42E+00	1.36E+00	9.06E-01
Kr-85	Curies	0.00E+00	0.00E+00	0.00E+00	5.43E-01
Xe-131M	Curies	2.21E+00	0.00E+00	0.00E+00	2.18E-02
Xe-133M	Curies	1.91E+00	0.00E+00	2.15E-02	4.79E-02
Xe-133	Curies	1.40E+02	4.47E+00	5.84E+00	1.03E+01
Xe-135	Curies	3.78E-01	2.19E-01	2.23E-01	1.58E-01
Total For Period	**Curies**	**1.46E+02**	**6.11E+00**	**7.45E+00**	**1.20E+01**
Iodines					
I-131	Curies	2.37E-04	0.00E+00	0.00E+00	0.00E+00
Total For Period	**Curies**	**2.37E-04**	**0.00E+00**	**0.00E+00**	**0.00E+00**
Particulates					
No Nuclides Found	Curies	0.00E+00	0.00E+00	0.00E+00	0.00E+00
Tritium					
H-3	Curies	1.07E+00	1.39E+00	5.84E+00	1.39E+00
Gross Alpha					
No Nuclides Found	Curies	0.00E+00	0.00E+00	0.00E+00	0.00E+00

If Not Detected, Nuclide is Not Reported. Zeroes in this table indicates that no radioactivity was present at detectable levels. See Table 2-6 for typical minimum detectable concentrations.

Table 2-3A

Vogtle Electric Generating Plant

RADIOACTIVE EFFLUENT RELEASE REPORT - 2010

Gaseous Effluents - Ground Level Releases

Unit: 1

Starting: 1-Jan- 2010 Ending: 31-Dec-2010

		Continuous Mode			
Nuclides Released	**Units**	**1ST Quarter**	**2ND Quarter**	**3RD Quarter**	**4TH Quarter**
Fission Gases					
No Nuclides Found	Curies	0.00E+00	0.00E+00	0.00E+00	0.00E+00
Iodines					
No Nuclides Found	Curies	0.00E+00	0.00E+00	0.00E+00	0.00E+00
Particulates					
No Nuclides Found	Curies	0.00E+00	0.00E+00	0.00E+00	0.00E+00
Tritium					
No Nuclides Found	Curies	0.00E+00	0.00E+00	0.00E+00	0.00E+00
Gross Alpha					
No Nuclides Found	Curies	0.00E+00	0.00E+00	0.00E+00	0.00E+00

Table 2-3A

Vogtle Electric Generating Plant

RADIOACTIVE EFFLUENT RELEASE REPORT - 2010

Gaseous Effluents - Ground Level Releases

Unit: 1

Starting: 1-Jan- 2010 Ending: 31-Dec-2010

		Batch Mode			
Nuclides Released	**Units**	**1ST Quarter**	**2ND Quarter**	**3RD Quarter**	**4TH Quarter**
Fission Gases					
No Nuclides Found	Curies	0.00E+00	0.00E+00	0.00E+00	0.00E+00
Iodines					
No Nuclides Found	Curies	0.00E+00	0.00E+00	0.00E+00	0.00E+00
Particulates					
No Nuclides Found	Curies	0.00E+00	0.00E+00	0.00E+00	0.00E+00
Tritium					
No Nuclides Found	Curies	0.00E+00	0.00E+00	0.00E+00	0.00E+00
Gross Alpha					
No Nuclides Found	Curies	0.00E+00	0.00E+00	0.00E+00	0.00E+00

If Not Detected, Nuclide is Not Reported. Zeroes in this table indicates that no radioactivity was present at detectable levels.
See Table 2-6 for typical minimum detectable concentrations.

Table 2-3B

Vogtle Electric Generating Plant

RADIOACTIVE EFFLUENT RELEASE REPORT - 2010

Gaseous Effluents - Ground Level Releases

Unit: 2

Starting: 1-Jan- 2010 Ending: 31-Dec-2010

		Continuous Mode			
Nuclides Released	**Units**	**1ST Quarter**	**2ND Quarter**	**3RD Quarter**	**4TH Quarter**
Fission Gases					
No Nuclides Found	Curies	0.00E+00	0.00E+00	0.00E+00	0.00E+00
Iodines					
No Nuclides Found	Curies	0.00E+00	0.00E+00	0.00E+00	0.00E+00
Particulates					
No Nuclides Found	Curies	0.00E+00	0.00E+00	0.00E+00	0.00E+00
Tritium					
No Nuclides Found	Curies	0.00E+00	0.00E+00	0.00E+00	0.00E+00
Gross Alpha					
No Nuclides Found	Curies	0.00E+00	0.00E+00	0.00E+00	0.00E+00

If Not Detected, Nuclide is Not Reported. Zeroes in this table indicates that no radioactivity was present at detectable levels.
See Table 2-6 for typical minimum detectable concentrations.

Table 2-3B

Vogtle Electric Generating Plant

RADIOACTIVE EFFLUENT RELEASE REPORT - 2010

Gaseous Effluents - Ground Level Releases

Unit: 2

Starting: 1-Jan- 2010 Ending: 31-Dec-2010

		Batch Mode			
Nuclides Released	**Units**	**1ST Quarter**	**2ND Quarter**	**3RD Quarter**	**4TH Quarter**
Fission Gases					
Ar-41	Curies	1.29E-01	0.00E+00	0.00E+00	0.00E+00
Xe-131M	Curies	1.81E-01	0.00E+00	0.00E+00	0.00E+00
Xe-133M	Curies	1.50E-01	0.00E+00	0.00E+00	0.00E+00
Xe-133	Curies	9.39E+00	0.00E+00	0.00E+00	0.00E+00
Xe-135	Curies	2.62E-02	0.00E+00	0.00E+00	0.00E+00
Total For Period	**Curies**	**9.88E+00**	**0.00E+00**	**0.00E+00**	**0.00E+00**
Iodines					
I-131	Curies	1.96E-04	0.00E+00	0.00E+00	0.00E+00
Total For Period	**Curies**	**1.96E-04**	**0.00E+00**	**0.00E+00**	**0.00E+00**
Particulates					
No Nuclides Found	Curies	0.00E+00	0.00E+00	0.00E+00	0.00E+00
Tritium					
H-3	Curies	1.05E-01	0.00E+00	0.00E+00	0.00E+00
Gross Alpha					
No Nuclides Found	Curies	0.00E+00	0.00E+00	0.00E+00	0.00E+00

If Not Detected, Nuclide is Not Reported. Zeroes in this table indicates that no radioactivity was present at detectable levels. See Table 2-6 for typical minimum detectable concentrations.

Table 2-3C

Vogtle Electric Generating Plant

RADIOACTIVE EFFLUENT RELEASE REPORT - 2010

Gaseous Effluents - Ground Level Releases

Unit: Site

Starting: 1-Jan- 2010 Ending: 31-Dec-2010

		Continuous Mode			
Nuclides Released	**Units**	**1ST Quarter**	**2ND Quarter**	**3RD Quarter**	**4TH Quarter**
Fission Gases					
No Nuclides Found	Curies	0.00E+00	0.00E+00	0.00E+00	0.00E+00
Iodines					
No Nuclides Found	Curies	0.00E+00	0.00E+00	0.00E+00	0.00E+00
Particulates					
No Nuclides Found	Curies	0.00E+00	0.00E+00	0.00E+00	0.00E+00
Tritium					
No Nuclides Found	Curies	0.00E+00	0.00E+00	0.00E+00	0.00E+00
Gross Alpha					
No Nuclides Found	Curies	0.00E+00	0.00E+00	0.00E+00	0.00E+00

If Not Detected, Nuclide is Not Reported. Zeroes in this table indicates that no radioactivity was present at detectable levels. See Table 2-6 for typical minimum detectable concentrations.

Table 2-3C

Vogtle Electric Generating Plant

RADIOACTIVE EFFLUENT RELEASE REPORT - 2010

Gaseous Effluents - Ground Level Releases

Unit: Site

Starting: 1-Jan- 2010 Ending: 31-Dec-2010

		Batch Mode			
Nuclides Released	**Units**	**1ST Quarter**	**2ND Quarter**	**3RD Quarter**	**4TH Quarter**
Fission Gases					
Ar-41	Curies	1.29E-01	0.00E+00	0.00E+00	0.00E+00
Xe-131M	Curies	1.81E-01	0.00E+00	0.00E+00	0.00E+00
Xe-133M	Curies	1.50E-01	0.00E+00	0.00E+00	0.00E+00
Xe-133	Curies	9.39E+00	0.00E+00	0.00E+00	0.00E+00
Xe-135	Curies	2.62E-02	0.00E+00	0.00E+00	0.00E+00
Total For Period	**Curies**	**9.88E+00**	**0.00E+00**	**0.00E+00**	**0.00E+00**
Iodines					
I-131	Curies	1.96E-04	0.00E+00	0.00E+00	0.00E+00
Total For Period	**Curies**	**1.96E-04**	**0.00E+00**	**0.00E+00**	**0.00E+00**
Particulates					
No Nuclides Found	Curies	0.00E+00	0.00E+00	0.00E+00	0.00E+00
Tritium					
H-3	Curies	1.05E-01	0.00E+00	0.00E+00	0.00E+00
Gross Alpha					
No Nuclides Found	Curies	0.00E+00	0.00E+00	0.00E+00	0.00E+00

If Not Detected, Nuclide is Not Reported. Zeroes in this table indicates that no radioactivity was present at detectable levels. See Table 2-6 for typical minimum detectable concentrations.

Table 2-4A

Vogtle Electric Generating Plant

RADIOACTIVE EFFLUENT RELEASE REPORT - 2010

Air Doses Due to Gaseous Release

Unit: 2

Starting: 1-Jan- 2010 Ending: 31-Dec-2010

Cumulative Doses Per Quarter

Type of Radiation	ODCM	Units	1ST Qtr	% ODCM	2ND Qtr	% ODCM	3RD Qtr	% ODCM	4TH Qtr	% ODCM
Gamma Air	5.00E+00	mRad	1.36E-05	2.71E-04	1.93E-05	3.85E-04	9.27E-05	1.85E-03	7.57E-06	1.51E-04
Beta Air	1.00E+01	mRad	4.80E-06	4.80E-05	6.86E-06	6.86E-05	3.27E-05	3.27E-04	2.69E-06	2.69E-05

Cumulative Doses Per Year

Type of Radiation	ODCM	Unit	Year to End	% ODCM	Receptor	Limit
Gamma Air	1.00E+01	mRad	1.33E-04	1.33E-03	Site Boundary / Child	Air Dose Gamma Annual 1.21
Beta Air	2.00E+01	mRad	4.70E-05	2.35E-04	Site Boundary / Child	Air Dose Beta Annual 1.21

Table 2-4B

Vogtle Electric Generating Plant

RADIOACTIVE EFFLUENT RELEASE REPORT - 2010

Air Doses Due to Gaseous Release

Unit: 2

Starting: 1-Jan- 2010 Ending: 31-Dec-2010

Cumulative Doses Per Quarter

Type of Radiation	ODCM	Units	1ST Qtr	% ODCM	2ND Qtr	% ODCM	3RD Qtr	% ODCM	4TH Qtr	% ODCM
Gamma Air	5.00E+00	mRad	1.36E-03	2.71E-02	2.04E-04	4.08E-03	1.29E-04	2.58E-03	1.74E-04	3.48E-03
Beta Air	1.00E+01	mRad	3.47E-03	3.47E-02	1.38E-04	1.38E-03	1.31E-04	1.31E-03	2.22E-04	2.22E-03

Cumulative Doses Per Year

Type of Radiation	ODCM	Unit	Year to End	% ODCM	Receptor	Limit
Gamma Air	1.00E+01	mRad	1.86E-03	1.86E-02	Site Boundary / Child	Air Dose Gamma Annual 1.21
Beta Air	2.00E+01	mRad	3.96E-03	1.98E-02	Site Boundary / Child	Air Dose Beta Annual 1.21

Table 2-4C

Vogtle Electric Generating Plant

RADIOACTIVE EFFLUENT RELEASE REPORT - 2010

Air Doses Due to Gaseous Release

Unit: Site

Starting: 1-Jan- 2010 Ending: 31-Dec-2010

Cumulative Doses Per Quarter

Type of Radiation	ODCM	Units	1ST Qtr	% ODCM	2ND Qtr	% ODCM	3RD Qtr	% ODCM	4TH Qtr	% ODCM
Gamma Air	5.00E+00	mRad	1.37E-03	2.74E-02	2.23E-04	4.47E-03	2.22E-04	4.43E-03	1.82E-04	3.63E-03
Beta Air	1.00E+01	mRad	3.48E-03	3.48E-02	1.45E-04	1.45E-03	1.64E-04	1.64E-03	2.25E-04	2.25E-03

Cumulative Doses Per Year

Type of Radiation	ODCM	Unit	Year to End	% ODCM	Receptor	Limit
Gamma Air	1.00E+01	mRad	2.00E-03	2.00E-02	Site Boundary / Child	Air Dose Gamma Annual 1.21
Beta Air	2.00E+01	mRad	4.01E-03	2.01E-02	Site Boundary / Child	Air Dose Beta Annual 1.21

Table 2-5A

Vogtle Electric Generating Plant

RADIOACTIVE EFFLUENT RELEASE REPORT - 2010

Doses To A Member Of The Public Due To Radioiodines, Tritium, and Particulates in Gaseous Releases

Unit: 1

Starting: 1-Jan- 2010 Ending: 31-Dec-2010

Cumulative Doses Per Quarter

Organ	ODCM	Units	1ST Qtr	% ODCM	2ND Qtr	% ODCM	3RD Qtr	% ODCM	4TH Qtr	% ODCM
Bone	7.50E+00	mRem	3.01E-06	4.01E-05	3.86E-06	5.15E-05	2.75E-06	3.67E-05	1.54E-07	2.05E-06
GI-Lli	7.50E+00	mRem	1.05E-04	1.40E-03	7.07E-05	9.43E-04	1.68E-04	2.24E-03	7.47E-05	9.96E-04
Kidney	7.50E+00	mRem	1.05E-04	1.40E-03	7.06E-05	9.42E-04	1.68E-04	2.24E-03	7.47E-05	9.96E-04
Liver	7.50E+00	mRem	1.05E-04	1.40E-03	7.06E-05	9.42E-04	1.68E-04	2.24E-03	7.47E-05	9.96E-04
Lung	7.50E+00	mRem	1.05E-04	1.40E-03	7.06E-05	9.42E-04	1.68E-04	2.24E-03	7.47E-05	9.96E-04
Thyroid	7.50E+00	mRem	1.18E-04	1.58E-03	7.06E-05	9.42E-04	1.68E-04	2.24E-03	7.47E-05	9.96E-04
Total Body	7.50E+00	mRem	1.06E-04	1.41E-03	7.16E-05	9.55E-04	1.68E-04	2.24E-03	7.47E-05	9.96E-04

Cumulative Doses per Year

Organ	ODCM	Units	Year to Ending Date	% ODCM	Receptor	Limit
Bone	1.500E+01	mRem	9.773E-06	6.515E-05	Maximum Individual / Child	Iodine/Part Dose Annual 1.2
GI-Lli	1.500E+01	mRem	4.181E-04	2.787E-03	Maximum Individual / Child	Iodine/Part Dose Annual 1.2
Kidney	1.500E+01	mRem	4.180E-04	2.787E-03	Maximum Individual / Child	Iodine/Part Dose Annual 1.2
Liver	1.500E+01	mRem	4.180E-04	2.787E-03	Maximum Individual / Child	Iodine/Part Dose Annual 1.2
Lung	1.500E+01	mRem	4.180E-04	2.787E-03	Maximum Individual / Child	Iodine/Part Dose Annual 1.2
Thyroid	1.500E+01	mRem	4.315E-04	2.876E-03	Maximum Individual / Child	Iodine/Part Dose Annual 1.2
Total Body	1.500E+01	mRem	4.204E-04	2.803E-03	Maximum Individual / Child	Iodine/Part Dose Annual 1.2

Table 2-5B

Vogtle Electric Generating Plant

RADIOACTIVE EFFLUENT RELEASE REPORT - 2010

Doses To A Member Of The Public Due To Radioiodines, Tritium, and Particulates in Gaseous Releases

Unit: 2

Starting: 1-Jan- 2010 Ending: 31-Dec-2010

Cumulative Doses Per Quarter

Organ	ODCM	Units	1ST Qtr	% ODCM	2ND Qtr	% ODCM	3RD Qtr	% ODCM	4TH Qtr	% ODCM
Bone	7.50E+00	mRem	5.47E-06	7.29E-05	6.12E-07	8.16E-06	0.00E+00	0.00E+00	0.00E+00	0.00E+00
GI-Lli	7.50E+00	mRem	1.38E-04	1.85E-03	1.12E-04	1.49E-03	6.14E-05	8.18E-04	2.44E-05	3.25E-04
Kidney	7.50E+00	mRem	1.45E-04	1.93E-03	1.12E-04	1.49E-03	6.14E-05	8.18E-04	2.44E-05	3.25E-04
Liver	7.50E+00	mRem	1.42E-04	1.90E-03	1.12E-04	1.49E-03	6.14E-05	8.18E-04	2.44E-05	3.25E-04
Lung	7.50E+00	mRem	1.38E-04	1.84E-03	1.12E-04	1.49E-03	6.14E-05	8.18E-04	2.44E-05	3.25E-04
Thyroid	7.50E+00	mRem	1.55E-03	2.06E-02	1.12E-04	1.49E-03	6.14E-05	8.18E-04	2.44E-05	3.25E-04
Total Body	7.50E+00	mRem	1.41E-04	1.88E-03	1.12E-04	1.49E-03	6.14E-05	8.18E-04	2.44E-05	3.25E-04

Cumulative Doses per Year

Organ	ODCM	Units	Year to Ending Date	% ODCM	Receptor		Limit
Bone	1.500E+01	mRem	6.081E-06	4.054E-05	Maximum Individual	/ Child	Iodine/Part Dose Annual 1.21
GI-Lli	1.500E+01	mRem	3.359E-04	2.239E-03	Maximum Individual	/ Child	Iodine/Part Dose Annual 1.21
Kidney	1.500E+01	mRem	3.425E-04	2.283E-03	Maximum Individual	/ Child	Iodine/Part Dose Annual 1.21
Liver	1.500E+01	mRem	3.397E-04	2.265E-03	Maximum Individual	/ Child	Iodine/Part Dose Annual 1.21
Lung	1.500E+01	mRem	3.355E-04	2.237E-03	Maximum Individual	/ Child	Iodine/Part Dose Annual 1.21
Thyroid	1.500E+01	mRem	1.743E-03	1.162E-02	Maximum Individual	/ Child	Iodine/Part Dose Annual 1.21
Total Body	1.500E+01	mRem	3.382E-04	2.255E-03	Maximum Individual	/ Child	Iodine/Part Dose Annual 1.21

Table 2-5C

Vogtle Electric Generating Plant

RADIOACTIVE EFFLUENT RELEASE REPORT - 2010

Doses To A Member Of The Public Due To Radioiodines, Tritium, and Particulates in Gaseous Releases

Unit: Site

Starting: 1-Jan- 2010 Ending: 31-Dec-2010

Cumulative Doses Per Quarter

Organ	ODCM	Units	1ST Qtr	% ODCM	2ND Qtr	% ODCM	3RD Qtr	% ODCM	4TH Qtr	% ODCM
Bone	7.50E+00	mRem	8.48E-06	1.13E-04	4.47E-06	5.96E-05	2.75E-06	3.67E-05	1.54E-07	2.05E-06
GI-Lli	7.50E+00	mRem	2.43E-04	3.25E-03	1.82E-04	2.43E-03	2.29E-04	3.05E-03	9.91E-05	1.32E-03
Kidney	7.50E+00	mRem	2.50E-04	3.33E-03	1.82E-04	2.43E-03	2.29E-04	3.05E-03	9.91E-05	1.32E-03
Liver	7.50E+00	mRem	2.47E-04	3.30E-03	1.82E-04	2.43E-03	2.29E-04	3.05E-03	9.91E-05	1.32E-03
Lung	7.50E+00	mRem	2.43E-04	3.24E-03	1.82E-04	2.43E-03	2.29E-04	3.05E-03	9.91E-05	1.32E-03
Thyroid	7.50E+00	mRem	1.66E-03	2.22E-02	1.82E-04	2.43E-03	2.29E-04	3.05E-03	9.91E-05	1.32E-03
Total Body	7.50E+00	mRem	2.46E-04	3.29E-03	1.83E-04	2.45E-03	2.30E-04	3.06E-03	9.91E-05	1.32E-03

Cumulative Doses per Year

Organ	ODCM	Units	Year to Ending Date	% ODCM	Receptor	Limit
Bone	1.500E+01	mRem	1.585E-05	1.057E-04	Maximum Individual / Child	Iodine/Part Dose Annual 1.
GI-Lli	1.500E+01	mRem	7.540E-04	5.027E-03	Maximum Individual / Child	Iodine/Part Dose Annual 1.
Kidney	1.500E+01	mRem	7.605E-04	5.070E-03	Maximum Individual / Child	Iodine/Part Dose Annual 1.
Liver	1.500E+01	mRem	7.577E-04	5.052E-03	Maximum Individual / Child	Iodine/Part Dose Annual 1.
Lung	1.500E+01	mRem	7.535E-04	5.023E-03	Maximum Individual / Child	Iodine/Part Dose Annual 1.
Thyroid	1.500E+01	mRem	2.175E-03	1.450E-02	Maximum Individual / Child	Iodine/Part Dose Annual 1.
Total Body	1.500E+01	mRem	7.586E-04	5.058E-03	Maximum Individual / Child	Iodine/Part Dose Annual 1.

Table 2-6
Vogtle Electric Generating Plant
RADIOACTIVE EFFLUENT RELEASE REPORT - 2010
MINIMUM DETECTABLE CONCENTRATIONS - GASEOUS SAMPLE ANALYSES

Starting: 1-Jan-2010 Ending: 31-Dec-2010

RADIONUCLIDE	MDC	UNITS
Kr-87	1.82E-08	µCi/ml
Kr-88	2.53E-08	µCi/ml
Xe-133	2.05E-08	µCi/ml
Xe-133m	8.63E-08	µCi/ml
Xe-135	7.12E-08	µCi/ml
Xe-138	1.05E-07	µCi/ml
I-131	7.93E-15*	µCi/ml
Mn-54	3.94E-14*	µCi/ml
Fe-59	2.45E-14*	µCi/ml
Co-58	1.39E-14*	µCi/ml
Co-60	1.75E-14*	µCi/ml
Zn-65	2.82E-14*	µCi/ml
Mo-99	9.57E-14*	µCi/ml
Cs-134	1.12E-14*	µCi/ml
Cs-137	8.71E-15*	µCi/ml
Ce-141	8.62E-15*	µCi/ml
Ce-144	2.77E-14*	µCi/ml
Sr-89	1.00E-13	µCi/ml
Sr-90	1.00E-13	µCi/ml
H-3	9.00E-08	µCi/ml
Gross Alpha	1.00E-13	µCi/ml

* Based on an estimated sample volume of 5.7E+08 ml.

Table 2-7A

Vogtle Electric Generating Plant

RADIOACTIVE EFFLUENT RELEASE REPORT - 2010

Gaseous Effluents - Batch Release Summary

Unit: 1

Starting: 1-Jan- 2010 Ending: 31-Dec-2010

Gaseous Releases	Units	1ST Quarter	2ND Quarter	3RD Quarter	4TH Quarter	Year Totals
1. Number of batch releases		24	25	24	26	99
2. Total time period for batch releases	(Minutes)	2.39E+03	3.17E+03	1.07E+04	1.46E+03	1.77E+04
3. Maximum time period for a batch	(Minutes)	9.37E+02	7.10E+02	4.55E+03	1.16E+02	4.55E+03
4. Average time period for a batch	(Minutes)	9.95E+01	1.27E+02	4.46E+02	5.62E+01	1.79E+02
5. Minimum time period for a batch	(Minutes)	2.40E+01	3.00E+01	2.30E+01	1.60E+01	1.60E+01

Table 2-7B

Vogtle Electric Generating Plant

RADIOACTIVE EFFLUENT RELEASE REPORT - 2010

Gaseous Effluents - Batch Release Summary

Unit: 2

Starting: 1-Jan- 2010 Ending: 31-Dec-2010

Gaseous Releases	Units	1ST Quarter	2ND Quarter	3RD Quarter	4TH Quarter	Year Totals
1. Number of batch releases		64	24	21	28	137
2. Total time period for batch releases	(Minutes)	5.91E+04	3.90E+04	2.24E+04	1.85E+04	1.39E+05
3. Maximum time period for a batch	(Minutes)	5.75E+03	9.09E+03	4.76E+03	3.27E+03	9.09E+03
4. Average time period for a batch	(Minutes)	9.24E+02	1.63E+03	1.07E+03	6.61E+02	1.02E+03
5. Minimum time period for a batch	(Minutes)	2.00E+00	6.00E+00	1.00E+01	1.40E+01	2.00E+00

Table 2-7C

Vogtle Electric Generating Plant

RADIOACTIVE EFFLUENT RELEASE REPORT - 2010

Gaseous Effluents - Batch Release Summary

Unit: Site

Starting: 1-Jan- 2010 Ending: 31-Dec-2010

Gaseous Releases	Units	1ST Quarter	2ND Quarter	3RD Quarter	4TH Quarter	Year Totals
1. Number of batch releases		88	49	45	54	236
2. Total time period for batch releases	(Minutes)	6.15E+04	4.22E+04	3.31E+04	2.00E+04	1.57E+05
3. Maximum time period for a batch	(Minutes)	5.75E+03	9.09E+03	4.76E+03	3.27E+03	9.09E+03
4. Average time period for a batch	(Minutes)	6.99E+02	8.62E+02	7.37E+02	3.70E+02	6.65E+02
5. Minimum time period for a batch	(Minutes)	2.00E+00	6.00E+00	1.00E+01	1.40E+01	2.00E+00

Table 2-8A

Vogtle Electric Generating Plant

RADIOACTIVE EFFLUENT RELEASE REPORT - 2010

Gaseous Effluents - Abnormal Release Summary

Unit: 1

Starting: 1-Jan- 2010 Ending: 31-Dec-2010

Gaseous Releases	Units	1ST Quarter	2ND Quarter	3RD Quarter	4TH Quarter	Year Totals
1. Number of Releases		0	0	0	0	0
2. Total Time For All Releases	(Minutes)	0.00E+00	0.00E+00	0.00E+00	0.00E+00	0.00E+00
3. Maximum Time For A Release	(Minutes)	0.00E+00	0.00E+00	0.00E+00	0.00E+00	0.00E+00
4. Average Time For A Release	(Minutes)	0.00E+00	0.00E+00	0.00E+00	0.00E+00	0.00E+00
5. Minimum Time For A Release	(Minutes)	0.00E+00	0.00E+00	0.00E+00	0.00E+00	0.00E+00
6. Total activity for all releases	(Curies)	0.00E+00	0.00E+00	0.00E+00	0.00E+00	0.00E+00
A. Fission And Activation Products						
1. Total Release (not including tritium, gases, alpha)	Curies	7.23E-03	5.56E-03	1.15E-03	1.83E-04	
2. Average diluted concentration during period	uCi/mL	7.21E-09	2.86E-09	4.74E-10	6.08E-11	
3. Percent of Applicable Limit	%	*	*	*	*	
B. Tritium						
1. Total Release	Curies	2.38E+02	2.90E+01	6.94E+00	9.80E-01	
2. Average diluted Concentration during period	uCi/mL	2.37E-04	1.49E-05	2.86E-06	3.26E-07	
3. Percent of Applicable Limit	%	*	*	*	*	
C. Dissolved and Entrained Gases						
1. Total Release	Curies	1.96E-01	2.47E-04	0.00E+00	0.00E+00	
2. Average diluted Concentration during period	uCi/mL	1.95E-07	1.27E-10	0.00E+00	0.00E+00	
3. Percent of Applicable Limit	%	*	*	*	*	

Table 2-8B

Vogtle Electric Generating Plant

RADIOACTIVE EFFLUENT RELEASE REPORT - 2010

Gaseous Effluents - Abnormal Release Summary

Unit: 2

Starting: 1-Jan- 2010 Ending: 31-Dec-2010

Gaseous Releases	Units	1ST Quarter	2ND Quarter	3RD Quarter	4TH Quarter	Year Totals
1. Number of Releases		0	0	0	1	1
2. Total Time For All Releases	(Minutes)	0.00E+00	0.00E+00	0.00E+00	3.55E+02	3.55E+02
3. Maximum Time For A Release	(Minutes)	0.00E+00	0.00E+00	0.00E+00	3.55E+02	3.55E+02
4. Average Time For A Release	(Minutes)	0.00E+00	0.00E+00	0.00E+00	3.55E+02	3.55E+02
5. Minimum Time For A Release	(Minutes)	0.00E+00	0.00E+00	0.00E+00	3.55E+02	3.55E+02
6. Total activity for all releases	(Curies)	0.00E+00	0.00E+00	0.00E+00	2.17E+00	2.17E+00
A. Fission And Activation Products						
1. Total Release (not including tritium, gases, alpha)	Curies	1.73E-02	1.84E-02	6.09E-03	1.02E-02	
2. Average diluted concentration during period	uCi/mL	8.66E-09	4.49E-09	1.22E-09	1.57E-09	
3. Percent of Applicable Limit	%	*	*	*	*	
B. Tritium						
1. Total Release	Curies	5.86E+02	1.06E+02	4.57E+01	1.65E+02	
2. Average diluted Concentration during period	uCi/mL	2.94E-04	2.58E-05	9.13E-06	2.55E-05	
3. Percent of Applicable Limit	%	*	*	*	*	
C. Dissolved and Entrained Gases						
1. Total Release	Curies	6.06E-01	7.56E-04	0.00E+00	2.57E-03	
2. Average diluted Concentration during period	uCi/mL	3.04E-07	1.85E-10	0.00E+00	3.99E-10	
3. Percent of Applicable Limit	%	*	*	*	*	

Table 2-8C

Vogtle Electric Generating Plant

RADIOACTIVE EFFLUENT RELEASE REPORT - 2010

Gaseous Effluents - Abnormal Release Summary

Unit: Site

Starting: 1-Jan- 2010 Ending: 31-Dec-2010

Gaseous Releases	Units	1ST Quarter	2ND Quarter	3RD Quarter	4TH Quarter	Year Totals
1. Number of Releases		0	0	0	1	1
2. Total Time For All Releases	(Minutes)	0.00E+00	0.00E+00	0.00E+00	3.55E+02	3.55E+02
3. Maximum Time For A Release	(Minutes)	0.00E+00	0.00E+00	0.00E+00	3.55E+02	3.55E+02
4. Average Time For A Release	(Minutes)	0.00E+00	0.00E+00	0.00E+00	3.55E+02	3.55E+02
5. Minimum Time For A Release	(Minutes)	0.00E+00	0.00E+00	0.00E+00	3.55E+02	3.55E+02
6. Total activity for all releases	(Curies)	0.00E+00	0.00E+00	0.00E+00	2.17E+00	2.17E+00

3.0 Solid Waste

3.1 Regulatory Requirements

The ODCM requirements presented in this section are stated in part for Unit 1 and Unit 2.

3.1.1 Solid Radioactive Waste System

10.2.1 Process Control Program (PCP)

Radioactive wastes shall be solidified or dewatered in accordance with the PCP to meet shipping and transportation requirements during transit and disposal site requirements when received at the disposal site.

3.1.2 Reporting Requirements

12.1 PCP states in part:

The Radioactive Effluent Release Report, submitted in accordance with Technical Specification 5.6.3, shall include a summary of the quantities of solid radwaste released from the units, as outlined in Regulatory Guide 1.21.

3.2 Solid Waste Data

Regulatory Guide 1.21, Table 3 is found in this report as Table 3-1.

Table 3-1
Vogtle Electric Generating Plant
RADIOACTIVE EFFLUENT AND WASTE DISPOSAL REPORT - 2010
SOLID WASTE AND IRRADIATED FUEL SHIPMENTS
Units 1 and 2

JANUARY 1, 2010 THROUGH JUNE 30, 2010

A. SOLID WASTE SHIPPED OFFSITE FOR BURIAL OR DISPOSAL (Non Irradiated Fuel)

1. Type of waste

Type of Waste	Unit	6 month Period	Est. Total Error, %
a. Spent Resins, Filter sludges, evaporator Bottoms, etc	m^3 Ci	N/A	N/A
b. Dry Compressible Waste, Contaminated Equipment, etc	m^3 Ci	475* 5.36	10%
c. Irradiated components, control rods, etc	m^3 Ci	NONE	N/A
d. Other (describe) Secondary Side Resin (SGBD)	m^3 Ci	NONE	N/A
*As Shipped 50 m^3 as disposed of.			

2. Estimate of major nuclide composition (by type of waste).

Type of waste	Nuclide		Percentage
a.	N/A N/A N/A	% % %	
b.	H-3 Ni-63 Co-60 C-14 Fe-55 Others	% % % % %	31.780 18.979 10.722 16.195 7.692 14.632
c.	N/A N/A N/A	% % %	
D	N/A N/A N/A	% % %	

3. Solid Waste Disposition

Number of Shipments	Mode of Transportation	Destination
1	Cask/Tractor/Trailer	Energy Solutions, Oak Ridge, TN
8	Tractor/Trailer	Energy Solutions, Oak Ridge, TN

TABLE 3-1
Vogtle Electric Generating Plant
RADIOACTIVE EFFLUENT AND WASTE DISPOSAL REPORT - 2010
SOLID WASTE AND IRRADIATED FUEL SHIPMENTS
Units 1 and 2

JANUARY 1, 2010 THROUGH JUNE 30, 2010

B. IRRADIATED FUEL SHIPMENTS (Disposition)

Number of Shipments	Mode of Transportation	Destination
NONE		

ADDITIONAL INFORMATION REQUIRED BY ODCM:

Shipments Sent Directly to Disposal

Shipment No.	Waste Class	Type Container	Shipping Class	Solidification Agent	Volume
NONE					

Shipments to a Waste Processor

Shipment No.	Waste Class	Type Container	Shipping Class	Solidification Agent	Processor
RVRS-10-001	A	IP-1	LSA-I	NONE	Energy Solutions
RVRS-10-002	A	IP-1	Limited Quantity	NONE	Energy Solutions
RVRS-10-003	A	IP-1	LSA-I	NONE	Energy Solutions
RVRS-10-004	A	IP-1	LSA-I	NONE	Energy Solutions
RVRS-10-005	A	IP-1	Limited Quantity	NONE	Energy Solutions
RVRS-10-006	A	IP-1	LSA-I	NONE	Energy Solutions
RVRS-10-007	A	IP-1	Limited Quantity	NONE	Energy Solutions
RVRS-10-008	A	IP-1I	LSA-II	NONE	Energy Solutions
RVRS-10-009	A	IP-1	LSA-I	NONE	Energy Solutions

TABLE 3-1
Vogtle Electric Generating Plant
RADIOACTIVE EFFLUENT AND WASTE DISPOSAL SEMIANNUAL REPORT - 2010
SOLID WASTE AND IRRADIATED FUEL SHIPMENTS
Units 1 and 2

JULY 1, 2010 THROUGH DECEMBER 31, 2010

A. SOLID WASTE SHIPPED OFFSITE FOR BURIAL OR DISPOSAL

1. Type of waste

Type of Waste	Unit	6 month Period	Est. Total Error, %
a. Spent Resins, Filter sludges, evaporator Bottoms, etc	m^3 Ci	3.115* 6.25	25%
b. Dry Compressible Waste, Contaminated Equipment, etc	m^3 Ci	270.143* 1.8	25%
c. Irradiated components, control rods, etc	m^3 Ci		
d. Other (describe) Secondary Side Resin (SGBD) **GIC Program	m^3 Ci	112.418* 7.38E-2	25%
* As Shipped			

2. Estimate of major nuclide composition (by type of waste).

Type of waste	Nuclide		Percentage
a.	N/A N/A N/A	% % %	
b.	H-3 Ni-63 Co-60 C-14 Fe-55 Others	% % % % %	31.780 18.979 10.722 16.195 7.692 14.632
c.	N/A N/A N/A	% % %	
D	N/A N/A N/A	% % %	

3. Solid Waste Disposition

Number of Shipments	**Mode of Transportation**	**Destination**
1	Cask/Tractor/Trailer	Energy Solutions, Oak Ridge, TN
1	Cask/Tractor/Trailer	Energy Solutions, Kingston, TN
8	Tractor/Trailer	Energy Solutions, Oak Ridge, TN
6	Tractor/Trailer	Energy Solutions, Oak Ridge, TN

TABLE 3-1
Vogtle Electric Generating Plant
RADIOACTIVE EFFLUENT AND WASTE DISPOSAL REPORT - 2010
SOLID WASTE AND IRRADIATED FUEL SHIPMENTS
Units 1 and 2

July 1, 2010 THROUGH December 31, 2010

B. Irradiated Fuel Shipments

Number of Shipments	Mode of Transportation	Destination
NONE		

Additional Information Required by ODCM:

Shipments Sent Directly to Disposal

Shipment No.	Waste Class	Type Container	Shipping Class	Solidification Agent	Volume
NONE					

Shipments to a Waste Processor

Shipment No.	Waste Class	Type Container	Shipping Class	Solidification Agent	Processor
RVRS-10-010	A	IP-1	LSA-I	NONE	Energy Solutions
RVRS-10-011 *	A	IP-1 (SGBD)	Limited Quantity	NONE	Energy Solutions
RVRS-10-012	A	IP-1	LSA-I	NONE	Energy Solutions
RVRS-10-013 *	A	IP-1 (SGBD)	Limited Quantity	NONE	Energy Solutions
RVRS-10-014	A	IP-1	Limited Quantity	NONE	Energy Solutions
RVRS-10-015	A	IP-1	Limited Quantity	NONE	Energy Solutions
RVRS-10-016	A	IP-I	Limited Quantity	NONE	Energy Solutions
RVRS-10-017	A	IP-I	Limited Quantity	NONE	Energy Solutions
RVRS-10-018 *	A	IP-I (SGBD)	Limited Quantity	NONE	Energy Solutions
RVRS-10-019 *	A	IP-I (SGBD)	Limited Quantity	NONE	Energy Solutions
RVRS-10-020	A	IP-I	LSA-I	NONE	Energy Solutions
RVRS-10-021*	A	IP-I (SGBD)	Limited Quantity	NONE	Energy Solutions
RVRS-10-022	A	IP-I	LSA-I	NONE	Energy Solutions
RVRS-10-023	A	IP-I	Limited Quantity	NONE	Energy Solutions
RVRS-10-024 *	A	IP-I (SGBD)	Limited Quantity	NONE	Energy Solutions
RVRS-10-025	A	IP-I	Limited Quantity	NONE	Energy Solutions

* Steam Generator Blow Down resin goes to Energy Solutions for final Evaluation and release.

4.0 Doses to Members of the Public Inside the Site Boundary

4.1 Regulatory Requirements

ODCM 7.2.2.3 states in part:

"The report shall also include assessment of the radiation doses from radioactive liquid and gaseous effluents to MEMBERS OF THE PUBLIC due to their activities inside the SITE BOUNDARY during the report period; this assessment must be performed in accordance with Chapter 6. All assumptions used in making these assessments (i.e., specific activity, exposure time, and location) shall be included in the report".

4.2 Demonstration of Compliance

The location of concern within the site boundary is the Visitors Center. The activities at the Visitor Center consist of occasional attendance at meetings and/or short visits for informational purposes.

There will be no radiation dose at this location due to radioactive liquid effluents. Delineated in Table 4-1 for this location are the values of the basic data assumed in the dose assessment due to radioactive gaseous effluents. Listed in this table are distance and direction from a point midway between the center of Unit 1 and the Unit 2 reactors, the dispersion and deposition factors for any releases from the plant vent (mixed mode) and from the turbine building (ground level), and the estimated maximum occupancy factor for an individual and the assumed age group of this individual.

The source term is listed in Tables 2-2A, and 2-2B for the mixed mode releases. Similarly, it is listed in tables 2-3A and 2-3B for the ground level releases.

The maximum doses in units of mrem to a MEMBER OF THE PUBLIC due to their activities inside the site boundary during the reporting period are presented in Table 4-1.

Table 4-1

Vogtle Electric Generating Plant

RADIOACTIVE EFFLUENT RELEASE REPORT - 2010
Doses to a Member of the Public Due to Activities Inside the Site Boundary

Unit: Site
Starting: 1-Jan-2010 Ending: 31-Dec-2010

Location Name: Visitor's Center Receptor
Distance (kilometers): 4.47E-01
Sector: SE
Occupancy Factor: 4.57E-04

Age Group: Child

Ground Level Release	Noble Gas	X/Q (sec/m3): 5.93E-06	
Ground Level Release	Particulate and Radioiodine	X/Q (sec/m3): 5.58E-06	D/Q (m-2): 2.28E-08
Mixed Mode Release	Noble Gas	X/Q (sec/m3): 7.12E-07	
Mixed Mode Release	Particulate and Radioiodine	X/Q (sec/m3): 6.74E-07	D/Q (m-2): 5.77E-09

	Units	1ST Quarter	2ND Quarter	3RD Quarter	4TH Quarter	Year
Bone	mRem	2.46E-09	1.11E-10	6.66E-11	7.67E-13	2.64E-09
Liver	mRem	1.33E-07	9.80E-08	1.23E-07	5.33E-08	4.07E-07
Total Body	mRem	1.33E-07	9.80E-08	1.23E-07	5.33E-08	4.07E-07
Thyroid	mRem	4.31E-07	9.80E-08	1.23E-07	5.33E-08	7.05E-07
Kidney	mRem	1.34E-07	9.80E-08	1.23E-07	5.33E-08	4.08E-07
Lung	mRem	1.32E-07	9.80E-08	1.23E-07	5.33E-08	4.07E-07
GI-Lli	mRem	1.32E-07	9.80E-08	1.23E-07	5.33E-08	4.07E-07
NG Total Body	mRem	9.06E-07	1.48E-07	1.46E-07	1.17E-07	1.32E-06
Whole Body Dose	mRem	1.04E-06	2.46E-07	2.69E-07	1.70E-07	1.72E-06

Table 4-1

Vogtle Electric Generating Plant

RADIOACTIVE EFFLUENT RELEASE REPORT - 2010
Doses to a Member of the Public Due to Activities Inside the Site Boundary

Unit: Site
Starting: 1-Jan-2010 Ending: 31-Dec-2010

Location Name: Units 3&4 Construction
Distance (kilometers): 4.83E-01
Sector: SW
Occupancy Factor: 2.37E-01

Age Group: Adult

Ground Level Release	Noble Gas	X/Q (sec/m3): 1.81E-05	
Ground Level Release	Particulate and Radioiodine	X/Q (sec/m3): 6.93E-06	D/Q (m-2): 2.88E-08
Ground Level Release	Particulate and Radioiodine	X/Q (sec/m3): 6.96E-06	D/Q (m-2): 2.88E-08
Mixed Mode Release	Noble Gas	X/Q (sec/m3): 9.75E-07	
Mixed Mode Release	Particulate and Radioiodine	X/Q (sec/m3): 9.17E-07	D/Q (m-2): 7.14E-09

	Units	1ST Quarter	2ND Quarter	3RD Quarter	4TH Quarter	Year
Bone	mRem	1.81E-08	0.00E+00	0.00E+00	0.00E+00	1.81E-08
Liver	mRem	1.81E-08	0.00E+00	0.00E+00	0.00E+00	1.81E-08
Total Body	mRem	1.81E-08	0.00E+00	0.00E+00	0.00E+00	1.81E-08
Thyroid	mRem	1.81E-08	0.00E+00	0.00E+00	0.00E+00	1.81E-08
Kidney	mRem	1.81E-08	0.00E+00	0.00E+00	0.00E+00	1.81E-08
Lung	mRem	1.81E-08	0.00E+00	0.00E+00	0.00E+00	1.81E-08
GI-Lli	mRem	1.81E-08	0.00E+00	0.00E+00	0.00E+00	1.81E-08
NG Total Body	mRem	1.80E-07	0.00E+00	0.00E+00	0.00E+00	1.80E-07
Whole Body Dose	mRem	1.98E-07	0.00E+00	0.00E+00	0.00E+00	1.98E-07

5.0 Total Dose from Uranium Fuel Cycle (40CFR190)

5.1 Regulatory Requirements

ODCM 5.1 states in part that the annual (calendar year) dose or dose commitment to any MEMBER OF THE PUBLIC due to releases of radioactivity and to radiation from uranium fuel cycle sources shall be limited to less than or equal to 25 mrems to the whole body or to any organ, except the thyroid, which shall be limited to less than or equal to 75 mrems.

5.2 Demonstration of Compliance

No dose limits stated in ODCM Sections 2.1.3, 3.1.3, and 3.1.4 were exceeded. Therefore, compliance with 40 CFR 190 dose limits was demonstrated in accordance with the requirements of ODCM Section 5.1.3.

6.0 Meteorological Data

ODCM 7.2.2.2 states in part:

The Radioactive Effluent Release Report shall include an annual summary of hourly meteorological data collected over the previous year. This annual summary may be either in the form of an hour-by-hour listing of wind speed, wind direction, atmospheric stability, and precipitation (if measured) on magnetic tape; or in the form of joint frequency distributions of wind speed, wind direction and atmospheric stability.

In lieu of submission with the Radioactive Effluent Release Report, the licensee has the option of retaining this summary of required meteorological data on site in a file that shall be provided to the NRC upon request.

7.0 Program Deviations

7.1 Inoperable Liquid or Gaseous Effluent Monitoring Instrumentation

7.1.1 Regulatory Requirement

ODCM 7.2.2.6 states in part that the report shall include deviations from the liquid and gaseous effluent monitoring instrumentation operability requirements included in Sections 2.1.1 and 3.1.1, respectively. The report shall include an explanation as to why the inoperability of liquid or gaseous effluent monitoring instrumentation was not corrected within the specified time requirement.

7.1.2 Description of Deviations

The inoperability of liquid and gaseous effluent monitors not corrected within the specified time for this reporting period is detailed below:

a. The river water dilution flow instrumentation, AFQI-7620 and FI-7620A, were determined to be inoperable and not corrected within the specified time requirement of ODCM Section 2.1.1.

   Condition reports 2009108845, 2009108949, 2009110546 and 2009110718 document the events of inoperability.

   The requirements of ODCM Action 40 have been implemented.

   This inoperability was not corrected within the specified time requirement because of equipment obsolescence. Design change work order C091733601 was scheduled to correct this issue. This work was completed on 10/20/10. This instrumentation is returned to service.

b. AFT-0014, waste gas system effluent flow rate measure device, was determined to be inoperable and not corrected within the specified time requirement of ODCM Section 3.1.1.

   Condition report 2009106923 documented the events of inoperability.

   The requirements of ODCM Action 46 have been implemented.

   This inoperability was not corrected within the specified time requirement because of operational issues. Repair of this equipment requires a simultaneous outage of the waste gas systems for both operating units. Design change work order A091273901 is scheduled to correct this issue following the Unit 1 refueling outage.

c. 1FT-0021, Steam Generator Blowdown Effluent Line flow rate measurement device, was determined to be inoperable and not corrected within the specified time requirement of ODCM Section 2.1.1.

   Condition report 2009104981 was written following unsuccessful channel calibration surveillance of this equipment under WO 1081301301.

   The requirements of ODCM Action 40 have been implemented.

   This inoperability was not corrected within the specified time requirement because of equipment obsolescence. Design change work order 1090935601 was scheduled to correct this issue.

This work was completed on 08/02/10. 1FT-0021 has been returned to service.

d. 1RE-12444A, Plant vent effluent wide range monitor, was determined to be inoperable and not corrected within the specified time requirement of ODCM Section 3.1.1.

   Condition report 2010105339 was written due to failure of the skid sample pump.

   The requirement of ODCM Action Statement 51 was not required due to alternate monitor 1RE-12442A being continuously operable.

   The inoperability was not corrected within the specified time requirement because a safety related pump assembly had to be used. This part had to be ordered. This work was completed on 08/03/10. 1RE-12444A is returned to service.

e. 2RE-12444C, Plant vent noble gas activity monitor, was determined to be inoperable and not corrected within the specified time requirement of ODCM Section 3.1.1.

   Condition report 2009100357 was written following unsuccessful channel calibration surveillance under WO 2090065101.

   The requirements of ODCM Actions 47 and 48 have not been required due to alternate monitor 1RE-12442C being continuously operable.

   The inoperability was not corrected within the specified time requirement because of equipment obsolescence. WO 2090065101 documents efforts to procure replacement parts. This work was completed on 12/08/10. 2RE-12444C has been returned to service.

7.2 Tanks Exceeding Curie Content Limits

7.2.1 Regulatory Requirements

ODCM 7.2.2.6 states in part that the report shall include a description of the events leading to liquid holdup tanks or gas storage tanks exceeding the limits of Technical Specifications 5.5.12.

7.2.2 Description of Deviations

Limits for outdoor liquid hold-up tanks used for radioactive liquids were not exceeded during this reporting period.
Limits for the gas storage tanks were not exceeded during this reporting period.

8.0 Changes to the Vogtle Electric Generating Plant Offsite Dose Calculation Manual (ODCM)

8.1 Regulatory Requirements

ODCM 7.2.2.5 states in part that changes to the ODCM shall be submitted with the Radioactive Effluent Release Report. These changes may be due to changes in the radiological environmental monitoring program sampling locations as required by ODCM 4.1.1.2.3 or changes to dose calculation locations as required by ODCM 4.1.2.2.2. Land uses and dose calculation locations within five miles of VEGP must be determined by a land use census as required by ODCM 4.1.2.

8.2 Description of Changes

Changes were made to the Vogtle Electric Generating Plant ODCM for the period January 1, 2010 through December 31, 2010. Revision 27 in October 2010. A complete copy of the ODCM will be included with this report with changes identified by bars in the right hand margin of the document.

Revision 27, October 2010
The following were revised to provide the option of recording the local effluent radiation monitor (if functional) on a scheduled frequency rather than sampling radioactive effluents when remote effluent radiation monitor indication is not available in the control room.

1. Table 2-1 Radioactive Liquid Effluent Monitoring Instrumentation, Action 37, Action 38, Action 39.
2. Table 3-1 Radioactive Gaseous Effluent Monitoring Instrumentation, Action 45, Action 47, Action 48, Action 51.

Also, in Section 3.3.6, Setpoints for Particulate and Iodine Monitors, the reference to ARE-13256 was deleted. This monitor was in the Dry Active Waste (DAW) Building and was removed when the building was removed during construction of Units 3 and 4.

9.0 Major Changes to Liquid, Gaseous, or Solid Radwaste Treatment Systems

9.1 Regulatory Requirements

ODCM 7.2.2.7 states in part:

As required by Sections 2.1.5 and 3.1.6, licensee initiated MAJOR CHANGES TO RADIOACTIVE WASTE TREATMENT SYSTEMS (liquid and gaseous) shall be reported to the Nuclear Regulatory Commission in the Radioactive Effluent Release Report covering the period in which the change was reviewed and accepted for implementation.

Note 1: In lieu of inclusion in the Radioactive Effluents Release Report, this same information may be submitted as part of the annual FSAR update.

PCP 12.1 states in part:

Licensee major initiated changes to the solid radioactive waste treatment system shall be reported to the Nuclear Regulatory Commission in the Radioactive Effluent Release Report for the period in which the change was implemented.

9.2 Description of Major Changes

Gaseous Radwaste System

There were no major changes to the gaseous radwaste systems in the 2010 assessment period.

Liquid Radwaste System

Major changes to the liquid radwaste facilities are those that contribute to significant changes in release; i.e., either decreases or increases in release volume or activity/dose.
This is to indicate that no major changes to the liquid radwaste systems occurred during the 2010 assessment period.

Solid Radwaste System

There were no major changes to the solid radwaste systems in the 2010 assessment period.

10.0 Corrections to Previous Reports

From a 2009 Assessment, the following 2 errors were noted:

1)The 2009 Annual Radioactive Release Report section 7.1.2.d. states that Unit 2 RE-12444C Plant vent noble gas activity monitor was determined to be inoperable and not corrected within the specified time requirement of ODCM section 3.1.1. The requirements of ODCM Actions 47 and 48 were not required due to the alternate monitor being continuously operable. The annual report stated the alternate monitor as *Unit 1* RE-12442C instead of *Unit 2* RE-12442C and the CR states from the control room log the alternate monitor was 2 RE-12442.

The statement was corrected to say, "The requirements of ODCM Action Statements 47and 48 were not required due to alternate monitor *Unit 2* RE-12442C being continually operable."

2) During the review of the Annual Radioactive Release Report for 2008 Table 2-3A- Gaseous Effluents-Ground Level Releases for Unit One the first quarter Batch mode contains a Tritium value with a No Nuclides Found as the Nuclide released. The amount released and nuclide is correctly identified in Table 2-3C for Unit: Site.

Table2-3A Gaseous Effluents – Ground Level Releases for Unit 1 has been corrected to identify H-3 as the isotope.

The affected pages, in their entirety are included in Attachment 1 for this report. Revision bars reflect the changes made.

CARBON-14

Carbon-14 (C-14) is a naturally-occurring radionuclide with a 5730 year half life. Nuclear weapons testing in the 1950s and 1960s significantly increased the amount of C-14 in the atmosphere. Nuclear power plants also produce C-14, but the amount is infinitesimal compared to what has been distributed in the environment due to weapons testing and what is produced by natural cosmic ray interactions.

As nuclear plants have improved gaseous waste processing systems and improved fuel performance, the percentages of "principal radionuclides" in gaseous effluents have changed, and C-14 has become a larger percentage. "Principal radionuclides" are determined based on public dose contribution or the amount of activity discharged compared to other radionuclides of the same effluent type. In Revision 2 (June 2009) of Regulatory Guide 1.21 (RG 1.21), "Measuring, Evaluating, and Reporting Radioactive Material in Liquid and Gaseous Effluents and Solid Waste," the NRC recommended re-evaluating "principal radionuclides" and reporting C-14 as appropriate. In 2010 Radioactive Effluent Release Reports, virtually all U. S. nuclear power plants will report C-14 amounts released and resulting doses to the maximally exposed member of the public.

Because C-14 is considered a hard-to-detect radionuclide which must be chemically separated from the effluent stream before it can be measured, RG 1.21 provides the option of calculating the C-14 source term based on power generation. The Electric Power Research Institute (EPRI) developed an accepted methodology for calculating C-14, and published the results in Technical Report 1021106 (December 2010), "Estimation of Carbon-14 in Nuclear Power Plant Gaseous Effluents." Evaluation of C-14 in radioactive liquid effluents is not required because the quantity and dose contribution has been determined to be insignificant.

At Plant Vogtle, the quantity of C-14 released in gaseous effluents in 2010 was estimated to be 12.08 Curies (per unit). Approximately 30% of the C-14 released is in the form of $^{14}CO_2$ and is incorporated into plants through photosynthesis. Ingestion dose results from this pathway. The remaining 70% is estimated to be organic. Both the organic and inorganic forms of C-14 contribute to inhalation dose. A child is the maximally exposed individual, and bone dose is the highest organ dose. Using the dose calculation methodology from the Vogtle ODCM, the resulting bone dose to a child located at the controlling receptor location would be 8.46E-02 mrem in a year which is 0.56% of the regulatory limit of 15 mrem per year (per unit) to any organ due to gaseous effluents. The resulting total body dose to a child located at the controlling receptor location would be 1.69E-02 mrem in a year which is 0.11% of the regulatory limit of 15 mrem per year (per unit) total body dose due to gaseous effluents.

ATTACHMENT 1

2009 Annual Radioactive Release Report section 7.1.2.d.

d. 2RE-12444C, Plant vent noble gas activity monitor, was determined to be inoperable and not corrected within the specified time requirement of ODCM Section 3.1.1.

   Condition report 2009100357 was written following unsuccessful channel calibration surveillance under WO 2090065101.

   The requirements of ODCM Actions 47 and 48 have not been required due to alternate monitor 2RE-12442C being continuously operable.

   The inoperability was not corrected within the specified time requirement because of equipment obsolescence. WO 2090065101 documents efforts to procure replacement parts. Repair is scheduled for spring 2010.

ATTACHMENT 1

Table 2-3A

Vogtle Electric Generating Plant

RADIOACTIVE EFFLUENT RELEASE REPORT - 2008
Gaseous Effluents - Ground Level Releases

Unit: 1
Starting: 1-Jan-2008 Ending: 31-Dec-2008

Nuclides Released	Unit	Batch Mode 1ST Quarter	2ND Quarter	3RD Quarter	4TH Quarter
Fission Gases					
Xe-133	Curies	1.76E-02	0.00E+00	0.00E+00	0.00E+00
Iodines					
No Nuclides Found	Curies	0.00E+00	0.00E+00	0.00E+00	0.00E+00
Particulates					
No Nuclides Found	Curies	0.00E+00	0.00E+00	0.00E+00	0.00E+00
Tritium					
H-3	Curies	9.03E-02	0.00E+00	0.00E+00	0.00E+00
Gross Alpha					
No Nuclides Found	Curies	0.00E+00	0.00E+00	0.00E+00	0.00E+00

If Not Detected, Nuclide is Not Reported. Zeroes in this table indicates that no radioactivity was present at detectable levels.
See Table 2-6 for typical minimum detectable concentrations.

Edwin I. Hatch Nuclear Plant
Joseph M. Farley Nuclear Plant
Vogtle Electric Generating Plant
Annual Radioactive Effluent Release Reports for 2010

Enclosure 4

Farley Offsite Dose Calculation Manual – Version 24

OFFSITE DOSE CALCULATION MANUAL

FOR

JOSEPH M. FARLEY NUCLEAR PLANT

Version 24

(January 2010)

Tom Moorer
Environmental Affairs, Chemistry,
and Radiological Services Manager

Tom Moorer

EFFECTIVE PAGE LIST

PAGE	VERSION	PAGE	VERSION
i	24	2-26	24
ii	24	2-27	24
iii	24	2-28	24
iv	24	2-29	24
v	24	2-30	24
vi	24	2-31	24
vii	24	2-32	24
viii	24	2-33	24
ix	24	2-34	24
x	24	2-35	24
xi	24	2-36	24
xii	24	2-37	24
xiii	24	2-38	24
1-1	24	2-39	24
2-1	24	2-40	24
2-2	24	2-41	24
2-3	24	2-42	24
2-4	24	3-1	24
2-5	24	3-2	24
2-6	24	3-3	24
2-7	24	3-4	24
2-8	24	3-5	24
2-9	24	3-6	24
2-10	24	3-7	24
2-11	24	3-8	24
2-12	24	3-9	24
2-13	24	3-10	24
2-14	24	3-11	24
2-15	24	3-12	24
2-16	24	3-13	24
2-17	24	3-14	24
2-18	24	3-15	24
2-19	24	3-16	24
2-20	24	3-17	24
2-21	24	3-18	24
2-22	24	3-19	24
2-23	24	3-20	24
2-24	24	3-22	24
2-25	24	3-22	24

3-23 24
3-24 24
3-25 24
3-26 24
3-27 24
3-28 24
3-29 24
3-30 24
3-31 24
3-32 24
3-33 24
3-34 24
3-35 24
3-36 24
3-37 24
3-38 24
3-39 24
3-40 24
3-41 24
3-42 24
3-43 24
3-44 24
4-1 24
4-2 24
4-3 24
4-4 24
4-5 24
4-6 24
4-7 24
4-8 24
4-9 24
4-10 24
4-11 24
4-12 24
4-13 24
4-14 24
4-15 24
4-16 24
4-17 24
4-18 24
5-1 24
5-2 24
5-3 24
6-1 24
6-2 24
6-3 24
7-1 24
7-2 24
7-3 24
7-4 24
7-5 24
7-6 24
8-1 24
8-2 24
8-3 24
8-4 24
8-5 24
8-6 24
8-7 24
8-8 24
8-9 24
8-10 24
8-11 24
8-12 24
8-13 24
8-14 24
8-15 24
8-16 24
8-17 24
8-18 24
8-19 24
8-20 24
8-22 24
8-22 24
9-1 24
9-2 24
9-3 24
9-4 24
9-5 24
9-6 24
9-7 24
9-8 24
9-9 24
9-10 24
9-11 24
9-12 24
9-13 24
9-14 24
9-15 24
9-16 24
9-17 24
9-18 24
9-19 24
9-20 24

9-21 24
9-22 24
9-23 24
9-24 24
9-25 24
9-26 24
9-27 24
9-28 24
9-29 24
9-30 24
9-31 24
9-32 24
9-33 24
9-34 24
9-35 24
9-36 24
9-37 24
9-38 24
9-39 24
9-40 24
9-41 24
9-42 24
10-1 24
10-2 24
10-3 24
10-4 24
10-5 24
10-6 24
10-7 24

TABLE OF CONTENTS

Page

DISTRIBUTION LIST i

EFFECTIVE PAGE LIST ii

TABLE OF CONTENTS iv

LIST OF TABLES viii

LIST OF FIGURES x

REFERENCES xi

CHAPTER 1: INTRODUCTION 1-1

CHAPTER 2: LIQUID EFFLUENTS 2-1

2.1 LIMITS OF OPERATION 2-1

2.1.1 Liquid Effluent Monitoring Instrumentation Control 2-1

2.1.2 Liquid Effluent Concentration Control 2-7

2.1.3 Liquid Effluent Dose Control 2-10

2.1.4 Liquid Radwaste Treatment System Control 2-11

2.1.5 MAJOR CHANGES TO LIQUID RADIOACTIVE WASTE TREATMENT SYSTEMS 2-12

2.2 LIQUID RADWASTE TREATMENT SYSTEM 2-13

2.3 LIQUID EFFLUENT MONITOR SETPOINTS 2-17

2.3.1 General Provisions Regarding Setpoints 2-17

2.3.2 Setpoints for Radwaste System Discharge Monitors 2-19

2.3.3 Setpoints for Monitors on Normally Low-Radioactivity Streams 2-25

2.4 LIQUID EFFLUENT DOSE CALCULATIONS 2-27

2.4.1 Calculation of Dose 2-27

2.4.2 Calculation of A_{iT} 2-28

2.4.3 Calculation of CF_{iv} 2-29

2.5 LIQUID EFFLUENT DOSE PROJECTIONS 2-38

2.5.1 Thirty-One Day Dose Projections 2-38

2.5.2 Dose Projections for Specific Releases 2-38

2.6 DEFINITIONS OF LIQUID EFFLUENT TERMS 2-39

CHAPTER 3: GASEOUS EFFLUENTS 3-1

3.1 LIMITS OF OPERATION 3-1

3.1.1 Gaseous Effluent Monitoring Instrumentation Control 3-1

3.1.2 Gaseous Effluent Dose Rate Control 3-6

3.1.3 Gaseous Effluent Air Dose Control 3-9

3.1.4 Control on Gaseous Effluent Dose to a MEMBER OF THE PUBLIC 3-10

3.1.5 GASEOUS RADWASTE TREATMENT SYSTEM Control 3-11

3.1.6 MAJOR CHANGES TO THE GASEOUS RADIOACTIVE WASTE TREATMENT SYSTEM and the VENTILATION EXHAUST TREATMENT SYSTEM 3-12

3.2 GASEOUS RADWASTE TREATMENT SYSTEM 3-13

3.3 GASEOUS EFFLUENT MONITOR SETPOINTS 3-15

3.3.1 General Provisions Regarding Noble Gas Monitor Setpoints 3-15

3.3.2 Setpoint for the Final Noble Gas Monitor on Each Release Pathway 3-17

3.3.3 Setpoints for Noble Gas Monitors on Effluent Source Streams 3-21

3.3.4 Determination of Allocation Factors, AG 3-23

3.3.5 Setpoints for Noble Gas Monitors with Special Requirements 3-25

3.3.6 Setpoints for Particulate and Idoine Monitors 3-25

3.4 GASEOUS EFFLUENT COMPLIANCE CALCULATIONS 3-26

3.4.1 Dose Rates at and Beyond the Site Boundary 3-26

3.4.2 Noble Gas Air Dose at or Beyond Site Boundary 3-27

3.4.3 Dose to a Member of the Public at or Beyond Site Boundary 3-31

3.4.4 Dose Calculations to Support Other Requirements 3-34

3.5 GASEOUS EFFLUENT DOSE PROJECTS 3-39

3.5.1 Thirty-One Day Dose Projections 3-39

3.5.2 Dose Projections for Specific Releases 3-40

3.6 DEFINITIONS OF GASEOUS EFFLUENT TERMS 3-41

CHAPTER 4: RADIOLOGICAL ENVIRONMENTAL MONITORING PROGRAM 4-1

4.1 LIMITS OF OPERATION 4-1

4.1.1 Radiological Environmental Monitoring 4-1

4.1.2 Land Use Census 4-7

4.1.3 Interlaboratory Comparison Program 4-8

4.2 RADIOLOGICAL ENVIRONMENTAL MONITORING LOCATIONS 4-9

CHAPTER 5: TOTAL DOSE DETERMINATIONS 5-1

5.1 LIMIT OF OPERATION 5-1

5.1.1 Applicability 5-1

5.1.2 Actions 5-1

5.1.3 Surveillance Requirements 5-2

5.1.4 Basis 5-2

5.2 DEMONSTRATION OF COMPLIANCE 5-3

CHAPTER 6: POTENTIAL DOSES TO MEMBERS OF THE PUBLIC DUE TO THEIR ACTIVITIES INSIDE THE SITE BOUNDARY 6-1

6.1 REQUIREMENT FOR CALCULATION 6-1

6.2 CALCULATIONAL METHOD 6-1

CHAPTER 7: REPORTS 7-1

7.1 ANNUAL RADIOLOGICAL ENVIRONMENTAL OPERATING REPORT 7-1

7.1.1 Requirement for Report 7-1

7.1.2 Report Contents 7-1

7.2 RADIOACTIVE EFFLUENT RELEASE REPORT 7-3

7.2.1 Requirement for Report 7-3

7.2.2 Report Contents 7-3

7.3 MONTHLY OPERATING REPORT 7-6

7.4 SPECIAL REPORTS 7-6

CHAPTER 8: METEOROLOGICAL MODELS 8-1

8.1 ATMOSPHERIC DISPERSION 8-1

8.1.1 Ground-Level Releases 8-1

8.1.2 Elevated Releases 8-2

8.1.3 Mixed-Mode Releases 8-5

8.2 RELATIVE DEPOSITION 8-6

8.2.1 Ground-Level Releases 8-6

8.2.2 Elevated Releases 8-6

8.2.3 Mixed-Mode Releases 8-7

8.3 ELEVATED PLUME DOSE FACTORS 8-7

8.4 METEOROLOGICAL SUMMARY 8-7

CHAPTER 9: METHODS AND PARAMETERS FOR CALCULATION OF GASEOUS EFFLUENT PATHWAY DOSE FACTORS, R_{aipj} 9-1

9.1 INHALATION PATHWAY FACTOR 9-1

9.2 GROUND PLANE PATHWAY FACTOR 9-2

9.3 GARDEN VEGETATION PATHWAY FACTOR 9-3

9.4 GRASS-COW-MILK PATHWAY FACTOR 9-6

9.5 GRASS-GOAT-MILK PATHWAY FACTOR 9-9

9.6 GRASS-COW-MEAT PATHWAY FACTOR 9-12

CHAPTER 10: DEFINITIONS OF EFFLUENT CONTROL TERMS 10-1

10.1 TERMS SPECIFIC TO THE ODCM 10-1

10.2 TERMS DEFINED IN THE TECHNICAL SPECIFICATIONS 10-4

LIST OF TABLES

		Page
Table 2-1	Radioactive Liquid Effluent Monitoring Instrumentation	2-3
Table 2-2	Radioactive Liquid Effluent Monitoring Instrumentation Surveillance Requirements	2-5
Table 2-3	Radioactive Liquid Waste Sampling and Analysis Program	2-8
Table 2-4	Applicability of Liquid Monitor Setpoint Methodologies	2-18
Table 2-5	Parameters for Calculation of Doses Due to Liquid Effluent Releases	2-31
Table 2-6	Element Transfer Factors	2-32
Table 2-7	Adult Ingestion Dose Factors	2-33
Table 2-8	Site-Related Ingestion Dose Factors, $A_{i\tau}$	2-36
Table 3-1	Radioactive Gaseous Effluent Monitoring Instrumentation	3-3
Table 3-2	Radioactive Gaseous Effluent Monitoring Instrumentation Surveillance Requirements	3-5
Table 3-3	Radioactive Gaseous Waste Sampling and Analysis Program	3-7
Table 3-4	Applicability of Gaseous Monitor Setpoint Methodologies	3-16
Table 3-5	Dose Factors for Exposure to a Semi-Infinite Cloud of Noble Gases	3-29
Table 3-6	Dose Factors for Exposure to Direct Radiation from Noble Gases in an Elevated Finite Plume	3-30
Table 3-7	Attributes of the Controlling Receptor	3-33
Table 3-8	R_{aipj} for Ground Plane Pathway, All Age Groups	3-35
Table 3-9	R_{aipj} for Inhalation Pathway, Child Age Group	3-36
Table 3-10	R_{aipj} for Cow Meat Pathway, Child Age Group	3-37
Table 3-11	R_{aipj} for Garden Vegetation Pathway, Child Age Group	3-38
Table 4-1	Radiological Environmental Monitoring Program	4-3
Table 4-2	Reporting Levels for Radioactivity Concentrations in Environmental Samples	4-5
Table 4-3	Values for the Minimum Detectable Concentration	4-6
Table 4-4	Radiological Environmental Monitoring Locations	4-10

Table 4-5	Onsite Groundwater Monitoring Locations	4-13
Table 6-1	Attributes of MEMBER OF THE PUBLIC Receptor Locations Inside the Site Boundary	6-2
Table 8-1	Terrain Elevation Above Plant Site Grade	8-8
Table 8-2	Annual Average ($\overline{X/Q}$) for Mixed Mode Releases	8-9
Table 8-3	Annual Average ($\overline{X/Q}$) for Ground-Level Releases	8-10
Table 8-4	Annual Average ($\overline{D/Q}$) for Mixed Mode Releases	8-11
Table 8-5	Annual Average ($\overline{D/Q}$) for Ground-Level Releases	8-12
Table 9-1	Miscellaneous Parameters for the Garden Vegetation Pathway	9-5
Table 9-2	Miscellaneous Parameters for the Grass-Cow-Milk Pathway	9-8
Table 9-3	Miscellaneous Parameters for the Grass-Goat-Milk Pathway	9-11
Table 9-4	Miscellaneous Parameters for the Grass-Cow-Meat Pathway	9-14
Table 9-5	Individual Usage Factors	9-15
Table 9-6	Stable Element Transfer Data	9-16
Table 9-7	Inhalation Dose Factors for the Infant Age Group	9-17
Table 9-8	Inhalation Dose Factors for the Child Age Group	9-20
Table 9-9	Inhalation Dose Factors for the Teenager Age Group	9-23
Table 9-10	Inhalation Dose Factors for the Adult Age Group	9-26
Table 9-11	Ingestion Dose Factors for the Infant Age Group	9-29
Table 9-12	Ingestion Dose Factors for the Child Age Group	9-32
Table 9-13	Ingestion Dose Factors for the Teenager Age Group	9-35
Table 9-14	Ingestion Dose Factors for the Adult Age Group	9-38
Table 9-15	External Dose Factors for Standing on Contaminated Ground	9-41

LIST OF FIGURES

		Page
Figure 2-1	LIQUID RADWASTE TREATMENT SYSTEM (Typical of Both Units)	2-14
Figure 2-2	Steam Generator Blowdown System (Typical of Both Units)	2-15
Figure 2-3	Liquid Discharge Pathways	2-16
Figure 3-1	Schematic Diagram of the Routine Release Sources and Release Points (Typical of Both Units)	3-14
Figure 4-1	Airborne Sampling Locations, 0-5000 feet	4-14
Figure 4-2	Indicator II (Community) Sampling Locations for Direct Radiation	4-15
Figure 4-3	Airborne Sampling Locations, 0-20 miles	4-16
Figure 4-4	Water Sampling Locations	4-17
Figure 4-5	Onsite Groundwater Monitoring Locations	4-18
Figure 8-1	Vertical Standard Deviation of Material in a Plume (σ_z)	8-13
Figure 8-2	Terrain Recirculation Factor (K_r)	8-14
Figure 8-3	Plume Depletion Effect for Ground-Level Releases	8-15
Figure 8-4	Plume Depletion Effect for 30-Meter Releases	8-16
Figure 8-5	Plume Depletion Effect for 60-Meter Releases	8-17
Figure 8-6	Plume Depletion Effect for 100-Meter Releases	8-18
Figure 8-7	Relative Deposition for Ground-Level Releases	8-19
Figure 8-8	Relative Deposition for 30-Meter Releases	8-20
Figure 8-9	Relative Deposition for 60-Meter Releases	8-21
Figure 8-10	Relative Deposition for 100-Meter (or Greater) Releases	8-22
Figure 10-1	Site Map for Effluent Controls	10-7

REFERENCES

1. J. S. Boegli, R.R. Bellamy, W. L. Britz, and R. L. Waterfield, "Preparation of Radiological Effluent Technical Specifications for Nuclear Power Plants," NUREG-0133, October 1978.

2. "Calculation of Annual Doses to Man form Routine Releases of Reactor Effluents for the Purpose of Evaluating Compliance with 10 CFR 50, Appendix I," U.S. NRC Regulatory Guide 1.109, March 1976.

3. "Calculation of Annual Doses to Man from Routine Releases of Reactor Effluents for the Purpose of Evaluating Compliance with 10 CFR 50, Appendix I," U.S. NRC Regulatory Guide 1.109, Revision 1, October 1977.

4. "Methods for Estimating Atmospheric Transport and Dispersion of Gaseous Effluents in Routine Releases from Light-Water-Cooled Reactors, "U.S. NRC Regulatory Guide 1.111, March 1976.

5. "Methods for Estimating Atmospheric Transport and Dispersion of Gaseous Effluents in Routine Releases from Light-Water-Cooled Reactors," U.S. NRC Regulatory Guide 1.111, Revision 1, July 1977.

6. "Estimating Aquatic Dispersion of Effluents from Accidental and Routine Reactor Releases for the Purpose of Implementing Appendix I,"U.S. NRC Regulatory Guide 1.113, April 1977.

7. Joseph M. Farley Nuclear Plant Units 1 and 2 Final Safety Analysis Report, Alabama Power Company.

8. Joseph M. Farley Nuclear Plant Units 1 and 2 Environmental Report - Operating License Stage, Alabama Power Company.

9. T. E. Young, T. S. Bohn, and W. Serrano, "Technical Evaluation Report for the Evaluation of ODCM Revision 7 for Joseph M. Farley Nuclear Plant, Units 1 and 2," EGG-PHY.8674, dated August 1989, transmitted by NRC letter dated November 9, 1989.

10. W. M. Jackson, "Survey Report of Chattahoochee River Water Use Downstream of Farley Nuclear Plant Liquid Effluent Discharge," dated July 19, 1990.

11. J. E. Till and H. R. Meyer, eds., Radiological Assessment, U.S. NRC Report NUREG/CR-3332, 1983.

12. L. A. Currie, Lower Limit of Detection: Definition and Elaboration of a Proposed Position of Radiological Effluent and Environmental Measurements, U.S. NRC Report NUREG/CR-4007, 1984.

13. "Radiological Assessment Branch Technical Position," U.S. Nuclear Regulatory Commission, Revision 1, November 1979.

14. U.S. DOE Report PNL-5484.

15. D. C. Kocher, "Radioactive Decay Data Tables," U.S. DOE Report DOE/TIC-11026, 1981.

16. Internal Memorandum, J. E. Garlington to D. N. Morey, Alabama Power Company, June 4, 1990.

17. W. W. Meinke and T. H. Essig, "Offsite Dose Calculation Manual Guidance: Standard Radiological Effluent Controls for Pressurized Water Reactors," NUREG-1301, April 1991.

18. {Joseph M. Farley Nuclear Plant Technical Specifications, Units 1 and 2.}

19. {Code of Federal Regulations, 10 CFR 50.4, "Written Communications."}

20. {Code of Federal Regulations, 10 CFR 50.72, "Immediate Notification Requirements for Operating Nuclear Power Reactors."}

21. {Code of Federal Regulations, 10 CFR 50.73, "Licensee Event Report System."}

22. {Joseph M. Farley Nuclear Plant Technical Requirements Manual (TRM).}

CHAPTER 1

INTRODUCTION

The Offsite Dose Calculation Manual is a supporting document of the Technical Specifications. As such, it describes the methodology and parameters to be used in the calculation of offsite doses due to radioactive liquid and gaseous effluents, and in the calculation of liquid and gaseous effluent monitoring instrumentation alarm setpoints. In addition, it contains the following:

- The controls required by the Technical Specifications, governing the radioactive effluent and radiological environmental monitoring programs.
- Schematics of liquid and gaseous radwaste effluent treatment systems, which include designation of release points to UNRESTRICTED AREAS.
- A list and maps indicating the specific sample locations for the Radiological Environmental Monitoring Program.
- Specifications and descriptions of the information that must be included in the Annual Radiological Environmental Operating Report and the Radioactive Effluent Release Report required by the Technical Specifications.

The ODCM will be maintained at the plant for use as a reference guide and training document of accepted methodologies and calculations. Changes in the calculational methods or parameters will be incorporated into the ODCM in order to ensure that it represents current methodology in all applicable areas. Any computer software used to perform the calculations described will be maintained current with the ODCM.

Equations and methods used in the ODCM are based on those presented in NUREG-0133 (Reference 1), in Regulatory Guide 1.109 (References 2 and 3), in Regulatory Guide 1.111 (References 4 and 5), and in Regulatory Guide 1.113 (Reference 6).

CHAPTER 2

LIQUID EFFLUENTS

2.1 LIMITS OF OPERATION

The following Liquid Effluent Controls implement requirements established by Technical Specifications Section 5.0. Terms printed in all capital letters are defined in Chapter 10.

2.1.1 Liquid Effluent Monitoring Instrumentation Control

In accordance with Technical Specification 5.5.4.a, the radioactive liquid effluent monitoring instrumentation channels shown in Table 2-1 shall be OPERABLE with their alarm/trip setpoints set to ensure that the limits specified in Section 2.1.2 are not exceeded. The alarm/trip setpoints of these channels shall be determined in accordance with Section 2.3.

2.1.1.1 Applicability

This limit applies at all times.

2.1.1.2 Actions

With a radioactive liquid effluent monitoring instrumentation channel alarm/trip setpoint less conservative than required by the above control, immediately suspend the release of radioactive liquid effluents monitored by the affected channel, declare the channel inoperable, or change the setpoint to a conservative value.

With less than the minimum number of radioactive liquid effluent monitoring instrumentation channels OPERABLE, take the ACTION shown in Table 2-1. Restore the inoperable instrumentation to OPERABLE status within 30 days and, if unsuccessful, explain in the next Radioactive Effluent Release Report pursuant to Section 7.2 why this inoperability was not corrected in a timely manner.

This control does not affect shutdown requirements or MODE changes.

2.1.1.3 Surveillance Requirements

Each radioactive liquid effluent monitoring instrumentation channel shall be demonstrated OPERABLE by performance of the CHANNEL CHECK, SOURCE CHECK, CHANNEL CALIBRATION, and CHANNEL OPERATIONAL TEST (COT) operations at the frequencies shown in Table 2-2.

2.1.1.4 Basis

The radioactive liquid effluent instrumentation is provided to monitor and control, as applicable, the releases of radioactive materials in liquid effluents during actual or potential releases of liquid effluents. The Alarm/Trip Setpoints for these instruments shall be calculated and adjusted in accordance with the methodology and parameters in Section 2.3 to ensure that the alarm/trip will occur prior to exceeding the limits of Section 2.1.2. The OPERABILITY and use of this instrumentation is consistent with the requirements of General Design Criteria 60, 63, and 64 of Appendix A to 10 CFR Part 50.

Table 2-1 Radioactive Liquid Effluent Monitoring Instrumentation

Instrument	OPERABILITY Requirements[a]	
	Minimum Channels OPERABLE	ACTION
1. Gross Radioactivity Monitors Providing Automatic Termination of Release		
a. Liquid Radwaste Effluent Line (RE-18)	1	28
b. Steam Generator Blowdown Effluent Line (RE-23B)	1	29
2. Flowrate Measurement Devices		
a. Liquid Radwaste Effluent Line 1) Waste Monitor Tank No. 1	1	30
2) Waste Monitor Tank No. 2	1	30
b. Discharge Canal Dilution Line (Service Water)	1	30
c. Steam Generator Blowdown Effluent Line	1	30

a. All requirements in this table apply to each unit.

Table 2-1 (contd) Notation for Table 2-1 - ACTION Statements

ACTION 28 - With the number of channels OPERABLE less than required by the Minimum Channels OPERABLE requirement, effluent releases may continue provided that prior to initiating a release:

a. At least two independent samples are analyzed in accordance with Section 2.1.2.3, and

b. At least two technically qualified members of the Facility Staff independently verify the discharge line valving and

(1) Verify the manual portion of the computer input for the release rate calculations performed on the computer, or

(2) Verify the entire release rate calculations if such calculations are performed manually.

Otherwise, suspend release of radioactive effluents via this pathway.

ACTION 29 - With the number of channels OPERABLE less than required by the Minimum Channels OPERABLE requirement, effluent releases via this pathway may continue, provided grab samples are analyzed for gross radioactivity (beta or gamma) at a MINIMUM DETECTABLE CONCENTRATION no higher than 1×10^{-7} µCi/mL.

a. At least once per 8 hours when the specific activity of the secondary coolant is greater than 0.01 µCi/gram DOSE EQUIVALENT I-131.

b. At least once per 24 hours when the specific activity of the secondary coolant is less than or equal to 0.01 µCi/gram DOSE EQUIVALENT I-131.

ACTION 30 - With the number of channels OPERABLE less than required by the Minimum Channels OPERABLE requirement, effluent releases via this pathway may continue, provided that the flowrate is estimated at least once per 4 hours during actual releases. Pump curves may be used to estimate flow.

Table 2-2 Radioactive Liquid Effluent Monitoring Instrumentation Surveillance Requirements

INSTRUMENT	Surveillance Requirements[d]			
	CHANNEL CHECK	SOURCE CHECK	CHANNEL CALIBRATION	CHANNEL OPERATIONAL TEST
1. Gross Radioactivity Monitors Providing Automatic Termination of Release				
a. Liquid Radwaste Effluent Line (RE-18)	D[b]	P	R[b]	Q[a]
b. Steam Generator Blowdown Effluent Line (RE-23B)	D	M	R[b]	Q[a]
2. Flowrate Measurement Devices				
a. Liquid Radwaste Effluent Line				
1) Waste Monitor Tank No. 1	D[c]	NA	R	NA
2) Waste Monitor Tank No. 2	D[c]	NA	R	NA
b. Discharge Canal Dilution Line (Service Water)	D[c]	NA	R	Q
c. Steam Generator Blowdown Effluent Line	D[c]	NA	R	NA

a. In addition to the basic functions of a CHANNEL OPERATIONAL TEST (Section 10.2):

(1) The CHANNEL OPERATIONAL TEST shall also demonstrate that automatic isolation of this pathway and control room alarm annunciation occur if any of the following conditions exists:

(a) Instrument indicates measured levels above the alarm/trip setpoint;

(b) Loss of control power; or

(c) Instrument controls loss of instrument power.

(2) The CHANNEL OPERATIONAL TEST shall also demonstrate that control room alarm annunciation occurs if any of the following conditions exists:

(a) Instrument indicates a downscale failure; or

(b) Instrument controls not set in operate mode.

Table 2-2 (cont'd) Notation for Table 2-2

b. The initial CHANNEL CALIBRATION shall be performed using one or more of the reference standards certified by the National Institute of Standards and Technology or using standards that have been obtained from suppliers that participate in measurements assurance activities with NIST. For subsequent CHANNEL CALIBRATION, sources that have been related to the initial calibration shall be used.

c. CHANNEL CHECK shall consist of verifying indication of flow during periods of release. CHANNEL CHECK shall be made at least once per 24 hours on days on which continuous, periodic, or batch releases are made.

d. All requirements in this table apply to each unit.

2.1.2 Liquid Effluent Concentration Control

In accordance with Technical Specifications 5.5.4.b and 5.5.4.c, the concentration of radioactive material released in liquid effluents to UNRESTRICTED AREAS (see Figure 10-1) shall be limited at all times to ten times the concentrations specified in 10 CFR 20, Appendix B, Table 2, Column 2 for radionuclides other than dissolved or entrained noble gases. For dissolved or entrained noble gases, the concentration shall be limited to 1×10^{-4} µCi/mL total activity.

2.1.2.1 Applicability

This limit applies at all times

2.1.2.2 Actions

With the concentration of radioactive material released in liquid effluents to UNRESTRICTED AREAS exceeding the limits stated in Section 2.1.2, immediately restore the concentration to within the stated limits.

This control does not affect shutdown requirements or MODE changes.

2.1.2.3 Surveillance Requirements

The radioactivity content of each batch of radioactive liquid waste shall be determined by sampling and analysis in accordance with Table 2-3. The results of radioactive analyses shall be used with the calculational methods in Section 2.3 to assure that the concentration at the point of release is maintained within the limits of Section 2.1.2.

2.1.2.4 Basis

This control is provided to ensure that the concentration of radioactive materials released in liquid waste effluents to UNRESTRICTED AREAS will be less than ten times the concentration levels specified in 10 CFR 20, Appendix B, Table 2, Column 2. This limitation provides additional assurance that the levels of radioactive materials in bodies of water in UNRESTRICTED AREAS will result in exposures within (1) the Section II.A design objectives of Appendix I, 10 CFR 50, to a MEMBER OF THE PUBLIC, and (2) the limits of 10 CFR 20.1301 to the population. The concentration limit for dissolved or entrained noble gases is based upon the assumption that Xe-135 is the controlling radioisotope and its MPC in air (submersion) was converted to an equivalent concentration in water using the methods described in International Commission on Radiological Protection (ICRP) Publication 2 (1959). The resulting concentration of 2×10^{-4} was then multiplied by the ratio of the effluent concentration limit for Xe-135, stated in Appendix B, Table 2, Column 1 of 10 CFR 20 (paragraphs 20.1001 to 20.2401), to the MPC for Xe-135, stated in Appendix B, Table II, Column 1 of 10 CFR 20 (paragraphs 20.1 to 20.601), to obtain the limiting concentration of 1×10^{-4}µCi/mL.

Table 2-3 Radioactive Liquid Waste Sampling and Analysis Program

Liquid Release Type	Sampling and Analysis Requirements[a,b]			
	Sampling FREQUENCY	Minimum Analysis FREQUENCY	Type of Activity Analysis	MINIMUM DETECTABLE CONCENTRATION (MDC) (µCi/mL)
A. Waste Tanks Producing BATCH RELEASES				
All	P Each BATCH	P Each BATCH	PRINCIPAL GAMMA EMITTERS I-131	5 E-7 1 E-6
	P One BATCH/M	M	Dissolved and Entrained Gases (Gamma Emitters)	1 E-5
	P Each BATCH	M COMPOSITE	H-3 Gross Alpha	1 E-5 1 E-7
	P Each BATCH	Q COMPOSITE	Sr-89, Sr-90 Fe-55	5 E-8 1 E-6
B. CONTINUOUS RELEASES[c]				
Steam Generator Blowdown	D Grab Sample	W COMPOSITE	PRINCIPAL GAMMA EMITTERS I-131	5 E-7 1 E-6
	M Grab Sample	M	Dissolved and Entrained Gases (Gamma Emitters)	1 E-5
	D Grab Sample	M COMPOSITE	H-3 Gross Alpha	1 E-5 1 E-7
	D Grab Sample	Q COMPOSITE	Sr-89, Sr-90 Fe-55	5 E-8 1 E-6
Turbine Building Sump	P[d] Grab Sample	W COMPOSITE	PRINCIPAL GAMMA EMITTERS H-3	5 E-7 1 E-5

Table 2-3 (contd) Notation for Table 2-3

a. All requirements in this table apply to each unit. Deviation from the MDC requirements of this table shall be reported in accordance with Section 7.2.

b. Terms printed in all capital letters are defined in Chapter 10.

c. Sampling will be performed only if the effluent will be discharged to the environment.

d. Samples will be taken prior to or during each discharge.

2.1.3 Liquid Effluent Dose Control

In accordance with Technical Specifications 5.5.4.d and 5.5.4.e, the dose or dose commitment to a MEMBER OF THE PUBLIC from radioactive materials in liquid effluents released, from each unit, to UNRESTRICTED AREAS (see Figure 10-1) shall be limited:

a. During any calendar quarter to less than or equal to 1.5 mrem to the total body and to less than or equal to 5 mrem to any organ, and

b. During any calendar year to less than or equal to 3 mrem to the total body and to less than or equal to 10 mrem to any organ.

2.1.3.1 Applicability

These limits apply at all times.

2.1.3.2 Actions

With the calculated dose from the release of radioactive materials in liquid effluents exceeding any of the limits of Section 2.1.3, prepare and submit to the Nuclear Regulatory Commission within 30 days, pursuant to 10 CFR 50.4, a Special Report which identifies the cause(s) for exceeding the limit(s); defines the corrective actions to be taken to reduce the releases; and defines the proposed corrective actions to be taken to assure that subsequent releases will be in compliance with the limits of Section 2.1.3.

This control does not affect shutdown requirements or MODE changes.

2.1.3.3 Surveillance Requirements

At least once per 31 days, cumulative dose contributions from liquid effluents for the current calendar quarter and the current calendar year shall be determined, for each unit, in accordance with Section 2.4.

2.1.3.4 Basis

This control is provided to implement the requirements of Sections II.A, III.A and IV.A of Appendix I, 10 CFR Part 50. The limits stated in Section 2.1.3 implement the guides set forth in Section II.A of Appendix I. The ACTIONS stated in Section 2.1.3.2 provide the required operating flexibility and at the same time implement the guides set forth in Section IV.A of Appendix I to assure that the releases of radioactive material in liquid effluents will be kept "as low as is reasonably achievable." Also, for fresh water sites with drinking water supplies that can be potentially affected by plant operations, there is reasonable assurance that the operation of the facility will not result in radionuclide concentrations in the finished drinking water that are in excess of the requirements of 40 CFR Part 141. The dose calculations in Section 2.4 implement the requirements in Section III.A of Appendix I, which state that conformance with the guides of Appendix I be shown by calculational procedures based on models and data, such that the actual exposure of a MEMBER OF THE PUBLIC through appropriate pathways is unlikely to be substantially underestimated. The equations specified in Section 2.4 for calculating the doses due to the actual release rates of radioactive materials in liquid effluents are consistent with the methodology provided in Regulatory Guide 1.109 (Reference 3) and Regulatory Guide 1.113 (Reference 6).

This control applies to the release of liquid effluents from each unit at the site. The liquid effluents from shared LIQUID RADWASTE TREATMENT SYSTEMS are to be proportioned between the units.

2.1.4 Liquid Radwaste Treatment System Control

In accordance with Technical Specification 5.5.4.f, the LIQUID RADWASTE TREATMENT SYSTEM shall be OPERABLE. The appropriate portions of the system shall be used to reduce radioactivity in liquid wastes prior to their discharge when the projected doses due to the liquid effluent, from each unit, to UNRESTRICTED AREAS (see Figure 10-1) would exceed 0.06 mrem to the total body or 0.2 mrem to any organ of a MEMBER OF THE PUBLIC in 31 days.

2.1.4.1 Applicability

This limit applies at all times.

2.1.4.2 Actions

With radioactive liquid waste being discharged without treatment and in excess of the above limits and any portion of the LIQUID RADWASTE TREATMENT SYSTEM not in operation, prepare and submit to the Nuclear Regulatory Commission within 30 days pursuant to 10 CFR 50.4, a Special Report which includes the following information:

a. Explanation of why liquid radwaste was being discharged without treatment, identification of any inoperable equipment or subsystems and the reason for inoperability,

b. Action(s) taken to restore the inoperable equipment to OPERABLE status, and

c. Summary description of action(s) taken to prevent a recurrence.

This control does not affect shutdown requirements or MODE changes.

2.1.4.3 Surveillance Requirements

Doses due to liquid releases to UNRESTRICTED AREAS shall be projected at least once per 31 days, in accordance with Section 2.5, during periods in which the LIQUID RADWASTE TREATMENT SYSTEMs are not being fully utilized.

The LIQUID RADWASTE TREATMENT SYSTEM shall be demonstrated OPERABLE:

a. by meeting the controls of Sections 2.1.2 and 2.1.3, or

b. by operating the LIQUID RADWASTE TREATMENT SYSTEM equipment for at least 15 minutes at least once per 92 days unless the LIQUID RADWASTE TREATMENT SYSTEM equipment has been utilized to process radioactive liquid effluents during the previous 92 days.

2.1.4.4. Basis

The OPERABILITY of the LIQUID RADWASTE TREATMENT SYSTEM ensures that this system will be available for use whenever liquid effluents require treatment prior to release to the UNRESTRICTED AREAS. The requirement that the appropriate portions of this system be used when specified provides assurance that the releases of radioactive materials in liquid effluents will be kept "as low as is reasonably achievable." This control implements the requirements of 10 CFR Part 50.36a, General Design Criterion 60 of Appendix A to 10 CFR Part 50, and the design objective given in Section II.D of Appendix I to 10 CFR Part 50. The specified limits governing the use of appropriate portions of the LIQUID RADWASTE TREATMENT SYSTEM were specified as a suitable fraction of the dose design objectives set forth in Section II.A of Appendix I, 10 CFR Part 50, for liquid effluents.

2.1.5 MAJOR CHANGES TO LIQUID RADIOACTIVE WASTE TREATMENT SYSTEMS

Licensee initiated MAJOR CHANGES TO LIQUID RADIOACTIVE WASTE TREATMENT SYSTEMS:

a. Shall be reported to the Nuclear Regulatory Commission in the Radioactive Effluent Release Report for the period in which the change was implemented, in accordance with Section 7.2.2.7.

b. Shall become effective upon review by the Plant Review Board and approval by the Vice President-Plant.

2.2 LIQUID RADWASTE TREATMENT SYSTEM

The Farley Nuclear Plant is located on the west bank of the Chattahoochee River approximately 35 river miles above the point where it empties into Lake Seminole. There are two pressurized water reactors on the site. Each unit is served by a completely separate LIQUID RADWASTE TREATMENT SYSTEM that is illustrated schematically in Figure 2-1. However, both units share a common demineralizer bed system for processing liquids prior to release from the site. As shown in Figure 2-2, the Steam Generator Blowdown System is a separate entity. Liquid discharge pathways are shown in Figure 2-3.

All liquid radwastes treated by the LIQUID RADWASTE TREATMENT SYSTEM are collected in 5,000-gallon Waste Monitor Tanks for sampling and analysis prior to release. Prior to sampling, each waste monitor tank is recirculated for a minimum of two tank content volumes, to ensure that a representative sample can be taken from the tank. Releases from the waste monitor tanks are routed to the Service Water discharge line (which provides dilution prior to release to the UNRESTRICTED AREA), and thence to the Chattahoochee River. The Service Water discharge line also receives input from the Cooling Tower Blowdown and the Turbine Building Sump.

Although no significant quantities of radioactivity are expected in the steam generator blowdown processing system, this effluent pathway is monitored as a precautionary measure. The monitors serving this pathway provide for automatic termination of release in the event that radioactivity is detected above predetermined levels. Like the LIQUID RADWASTE TREATMENT SYSTEMs, the Steam Generator Blowdown Systems discharge to the Service Water discharge line.

One potential release pathway, the Turbine Building Sump discharge, is not monitored during release, but is sampled regularly during discharges. Sampling and analysis of releases via this pathway must be sufficient to ensure that the liquid effluent dose limits specified in Section 2.1.3 are not exceeded.

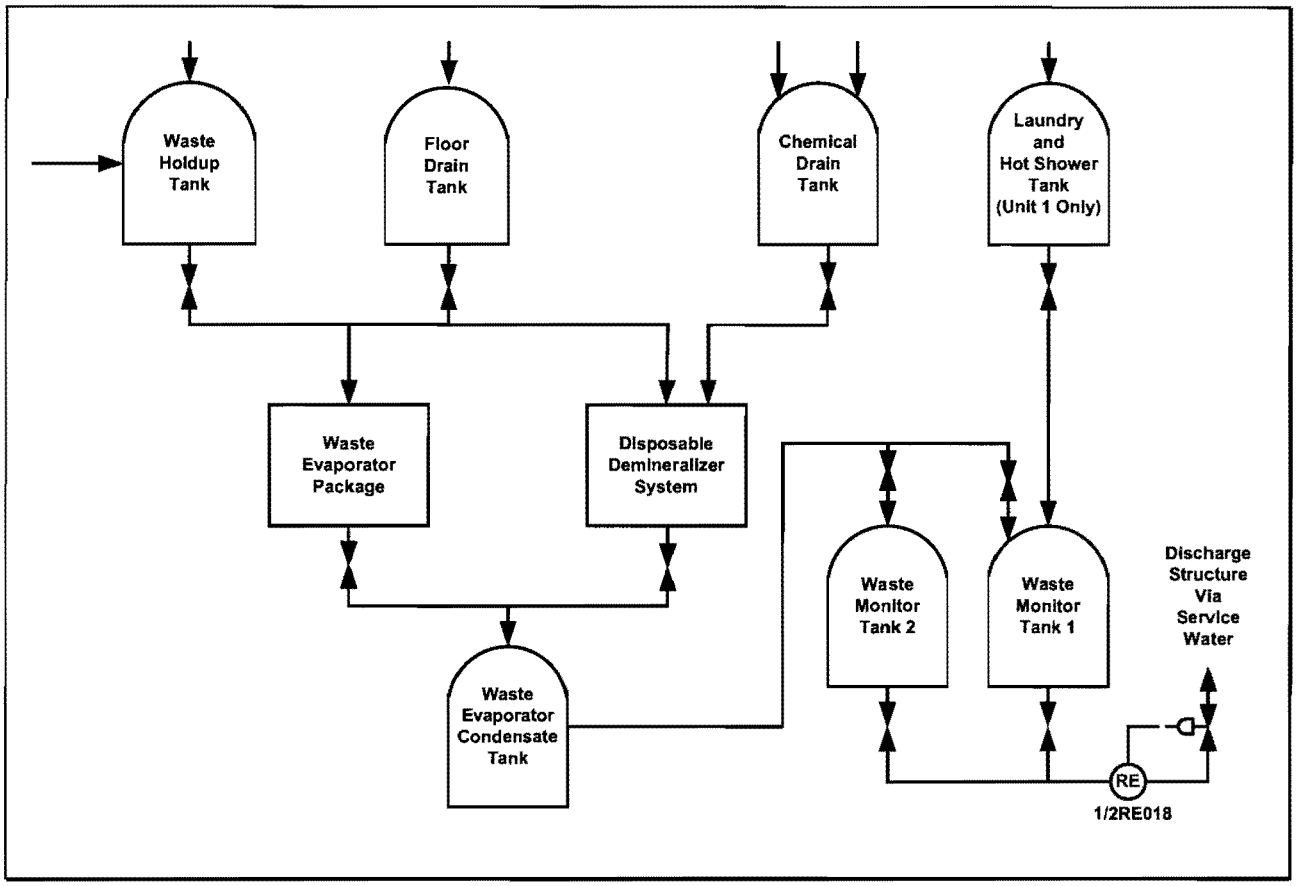

Figure 2-1 LIQUID RADWASTE TREATMENT SYSTEM (TYPICAL OF BOTH UNITS)

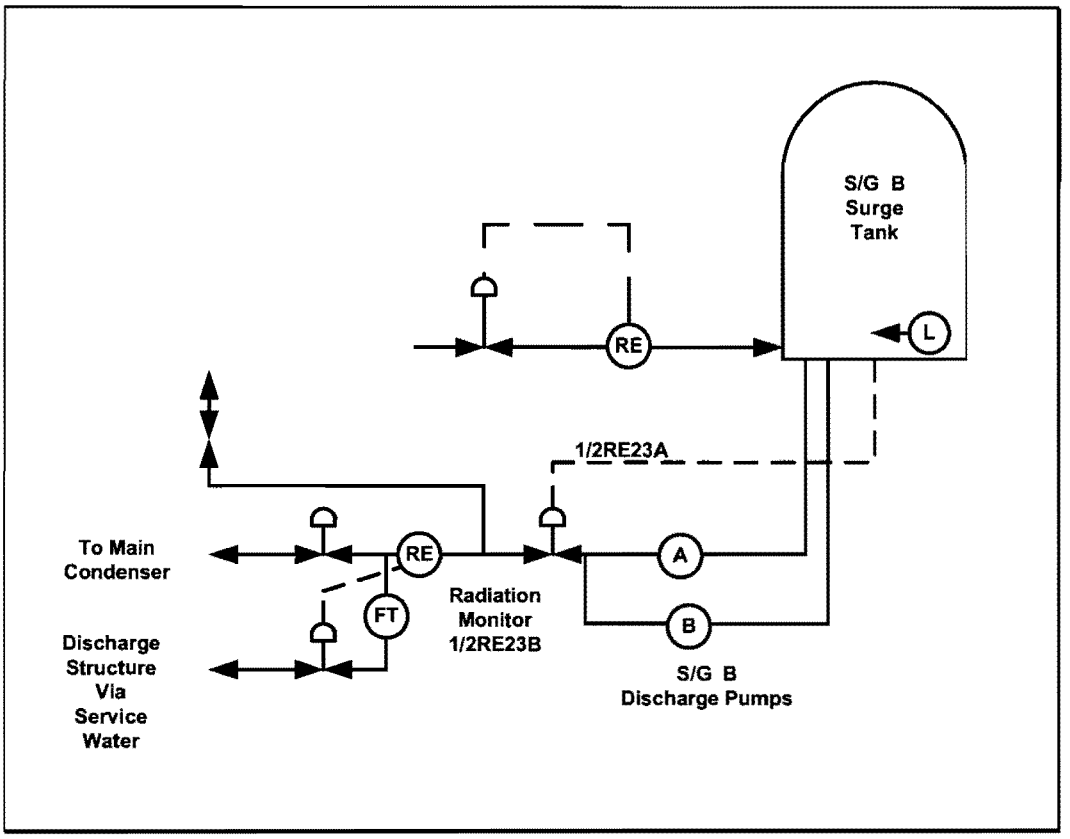

Figure 2-2 Steam Generator Blowdown System (Typical of Both Units)

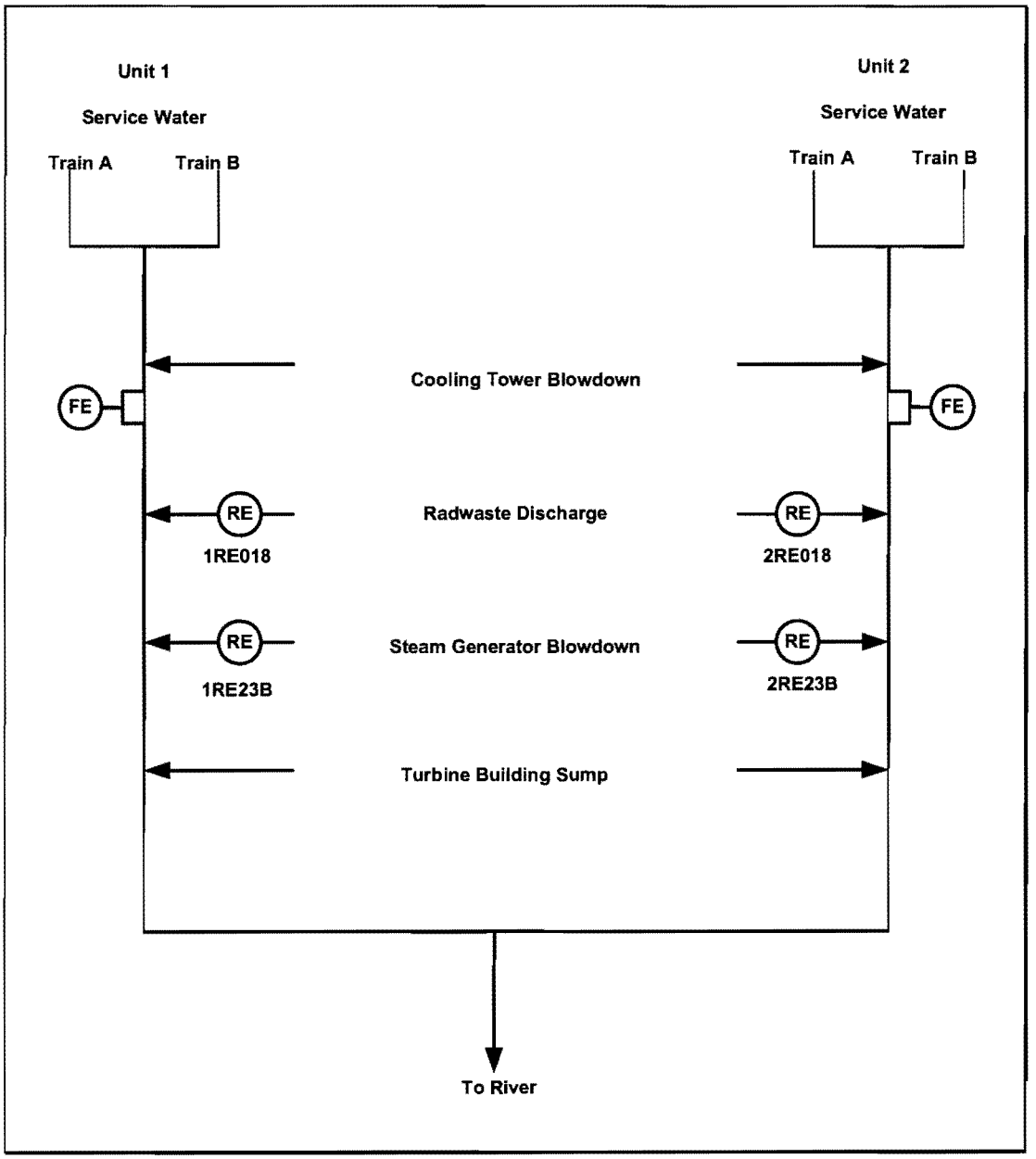

Figure 2-3. Liquid Discharge Pathways

2.3 LIQUID EFFLUENT MONITOR SETPOINTS

2.3.1 General Provisions Regarding Setpoints

Liquid monitor setpoints calculated in accordance with the methodology presented in this section will be regarded as upper bounds for the actual high alarm setpoints. That is, a lower value for the high alarm setpoint may be established or retained on the monitor, if desired. Intermediate level setpoints should be established at an appropriate level to give sufficient warning prior to reaching the high alarm setpoint. If no release is planned for a particular pathway, or if there is no detectable activity in the planned release, the monitor setpoint should be established as close to background as practical to prevent spurious alarms, and yet alarm should an inadvertent release occur.

Two basic setpoint methodologies are presented below. For radwaste system discharge monitors, setpoints are determined to assure that the limits of Section 2.1.2 are not exceeded. For monitors on streams that are not expected to contain significant radioactivity, the purpose of the monitor setpoints is to cause an alarm on low levels of radioactivity, and to terminate the release where this is possible. Section 2.1.1 establishes the requirements for liquid effluent monitoring instrumentation. Table 2-4 lists the monitors for which each of the setpoint methodologies is applicable.

Table 2-4 Applicability of Liquid Monitor Setpoint Methodologies

Liquid Radwaste Discharge Monitors

Setpoint Method: Section 2.3.2

Unit 1 or Unit 2 Waste Monitor Tanks Effluent
Release Type: BATCH
Monitor: 1RE-018 / 2RE-018

Unit 1 or Unit 2 Steam Generator Blowdown Effluent
Release Type: CONTINUOUS
Monitor: 1RE-023 B / 2RE-023 B

Normally Low-Radioactivity Streams with Termination or Diversion upon Alarm

Farley Nuclear Plant has no liquid effluent streams in this category.

Normally Low-Radioactivity Streams with Alarm Only

Farley Nuclear Plant has no liquid effluent streams in this category.

2.3.2 Setpoints for Radwaste System Discharge Monitors

2.3.2.1 Overview of Method

LIQUID RADWASTE TREATMENT SYSTEM effluent line radioactivity monitors are intended to provide alarm and automatic termination of release prior to exceeding the limits specified in Section 2.1.2 at the point of release of the diluted effluent into the UNRESTRICTED AREA. Therefore, their alarm/trip setpoints are established to ensure compliance with the following equation (equation adapted from Addendum to Reference 1):

$$\frac{c \cdot f}{F + f} \leq TF \cdot C_{ECL} \qquad \textbf{(2.1)}$$

where:

C_{ECL} = the Effluent Concentration Limit corresponding to the mix of radionuclides in the effluent being considered for discharge, in μCi/mL.

c = the setpoint, in μCi/mL, of the radioactivity monitor measuring the concentration of radioactivity in the effluent line prior to dilution and subsequent release. The setpoint represents a concentration which, if exceeded, could result in concentrations exceeding the limits of Section 2.1.2 in the UNRESTRICTED AREA.

f = the effluent flowrate at the location of the radioactivity monitor, in gpm.

F = the dilution stream flowrate which can be assured prior to the release point to the UNRESTRICTED AREA, in gpm. A predetermined dilution flowrate must be assured for use in the calculation of the radioactivity monitor setpoint.

TF = the tolerance factor selected to allow flexibility in the establishment of a practical monitor setpoint which could accommodate effluent releases at concentrations higher than the ECL values stated in 10 CFR 20, Appendix B, Table 2, Column 2; the tolerance factor must not exceed a value of 10.

While equation (2.1) shows the relationships of the critical parameters that determine the setpoint, it cannot be applied practically to a mixture of radionuclides with different Effluent Concentration Limits (ECLs). For a mixture of radionuclides, equation (2.1) is satisfied in a practicable manner based on the calculated ECL fraction of the radionuclide mixture and the dilution stream flowrate that can be assured for the duration of the release (F_d), by calculating the maximum permissible effluent flowrate (f_m) and the radioactivity monitor setpoint (c).

The setpoint method presented below is applicable to the release of only one tank of liquid radwaste per reactor unit at a given time. Liquid releases must be controlled administratively to ensure that this condition is met; otherwise, the setpoint method may not ensure that the limits of Section 2.1.2 are not exceeded.

2.3.2.2 Setpoint Calculation Steps

Step 1: Determine the radionuclide concentrations in the liquid waste being considered for release in accordance with the sampling and analysis requirements of Section 2.1.2.

To ensure that sample analyses are based on samples that are representative of the waste being sampled, the liquid volume must be mixed thoroughly prior to sampling. Mixing may be accomplished by any method that has been demonstrated to achieve sufficient mixing for representative sampling. The Waste Monitor Tanks are recirculated for a minimum of two tank content volumes prior to sampling. The Service Water discharge line is assumed to be well mixed, so that no additional mixing is required prior to sampling.

The total concentration of the liquid waste is determined by the results of all required analyses on the collected sample, as follows:

$$\sum_i C_i = C_a + \sum_s C_s + C_f + C_t + \sum_g C_g \qquad \textbf{(2.2)}$$

where:

C_a = the gross concentration of alpha emitters in the liquid waste, not less than that measured in the most recent applicable composite sample.

C_s = the concentration of strontium radioisotopes (Sr-89 or Sr-90) in the liquid waste, not less than that measured in the most recent applicable composite sample.

C_f = the concentration of Fe-55 in the liquid waste, not less than that measured in the most recent applicable composite sample.

C_t = the concentration of H-3 in the liquid waste, not less than that measured in the most recent applicable composite sample.

C_g = the concentration of gamma emitter g in the liquid waste as measured by gamma ray spectroscopy performed on the sample for the release under consideration.

The C_g term will be included in the analysis of each waste sample; terms for gross concentrations of alpha emitters, Sr-89, Sr-90, Fe-55, and tritium will be included in accordance with the sampling and analysis program required for the waste stream (see Section 2.1.2). For each analysis, only radionuclides identified and detected above background for the given measurement should be included in the calculation. When using the alternate setpoint methodology of step 5.b, the historical maximum values of C_a, C_s, C_f, and C_t shall be used.

Step 2: Determine the required dilution factor for the mix of radionuclides detected in the waste.

Measured radionuclide concentrations are used to calculate ECL fractions. The ECL fractions are used along with a safety factor to calculate the required dilution factor; this is the minimum ratio of dilution flowrate to waste flowrate that must be maintained throughout the release to ensure that the Effluent Concentration Limits of Section 2.1.2 are not exceeded at the point of discharge into the UNRESTRICTED AREA. The required dilution factor, RDF, is calculated as the sum of the dilution factors required for gamma emitters (RDF_γ) and for non-gamma-emitters ($RDF_{n\gamma}$):

$$\begin{aligned} RDF &= \left[\sum_i \frac{C_i}{ECL_i}\right] \div [(SF)(TF)] \\ &= RDF_\gamma + RDF_{n\gamma} \end{aligned} \tag{2.3}$$

$$RDF_\gamma = \frac{\left[\sum_g \frac{C_g}{ECL_g}\right]}{(SF)(TF)} \tag{2.4}$$

$$RDF_{n\gamma} = \frac{\left[\frac{C_a}{ECL_a} + \sum_s \frac{C_s}{ECL_s} + \frac{C_f}{ECL_f} + \frac{C_t}{ECL_t}\right]}{(SF)(TF)} \tag{2.5}$$

where:

C_i = the measured concentration of radionuclide i as defined in step 1, in µCi/mL. The C_a, C_s, C_f, and C_t terms will be included in the calculation as appropriate.

ECL_i = the ECL for radionuclide i from 10 CFR Part 20, Appendix B, Table 2, Column 2 (except for noble gases as discussed below). In the absence of information regarding the solubility classification of a given radionuclide in the waste stream, the solubility class with the lowest ECL shall be assumed. For dissolved or entrained noble gases, the concentration shall be limited to 1×10^{-4} µCi/mL. For gross alpha, the ECL shall be 2×10^{-9} µCi/mL; if specific alpha-emitting radionuclides are measured, the ECL for the specific radionuclide(s) should be used.

SF = the safety factor selected to compensate for statistical fluctuations and errors of measurement. The value for the safety factor must be between 0 and 1. A value of 0.5 is reasonable for liquid releases; a more precise value may be developed if desired.

TF = the tolerance factor (as defined in Section 2.3.2.1).

Step 3: Determine the release-specific assured dilution stream flowrate.

Determine the dilution stream flowrate that can be assured during the release period, designated F_d.

If simultaneous radioactive releases are planned from the same reactor unit, the unit's dilution stream must be allocated among all the simultaneous releases, whether or not they are monitored during release. Normally, only the Waste Monitor Tank and Steam Generator Blowdown effluents need be considered, unless there is detectable radioactivity in one of the normally low-radioactivity streams (see Table 2-4), or in the Turbine Building Sump. Allocation of the dilution stream to multiple release paths is accomplished as follows:

$$F_{dp} = F_d(AF_p) \tag{2.6}$$

where:

F_{dp} = the dilution flowrate allocated to release pathway p, in gpm.

AF_p = the dilution allocation factor for release pathway p. AF_p may be assigned any value between 0 and 1 for each active release pathway, under the condition that the sum of the AF_p for all active release pathways for each unit does not exceed 1. [Note: Because the two units have separate dilution streams, the two units do not affect each other with respect to dilution allocation.]

F_d = the assured minimum dilution flow for the unit, in gpm.

If more precise allocation factor values are desired, they may be determined based on the relative radiological impact of each active release pathway; this may be approximated by multiplying the RDF of each effluent stream by its respective planned release flowrate, and comparing these values. If only one release pathway for a given reactor unit contains detectable radioactivity, its AF_p may be assigned the value of 1, making F_{dp} equal to F_d.

For the case where RDF ≤ 1, the planned release meets the limits of Section 2.1.2 without dilution, and may be released with any desired effluent flowrate and dilution flowrate.

Step 4: Determine the maximum allowable waste discharge flowrate.

For the case where RDF > 1, the maximum permissible effluent discharge flowrate for this release pathway, f_{mp} (in gpm), is calculated as follows:

$$f_{mp} = \frac{F_{dp}}{(RDF - 1)} \tag{2.7}$$

For the case RDF ≤ 1, equation (2.7) is not valid. However, as discussed above, when RDF ≤ 1, the release may be made at full discharge pump capacity; the radioactivity monitor setpoint must still be calculated in accordance with Step 5 below.

NOTE 1: Discharge flowrates are actually limited by the discharge pump capacity. When the calculated maximum permissible release flowrate exceeds the pump capacity, the release may be made at full capacity. Discharge flowrates less than the pump capacity must be achieved by throttling if this is available; if throttling is not available, the release may not be made as planned.

NOTE 2: If, at the time of the planned release, there is detectable radioactivity due to plant operations in the dilution stream, the diluting capacity of the dilution stream is diminished. (In addition, sampling and analysis of the other radioactive effluents affecting the dilution stream must be sufficient to ensure that the liquid effluent dose limits specified in the controls of Section 2.1.3 are not exceeded.) Under these conditions, equation (2.7) must be modified to account for the radioactivity present in the dilution stream prior to the introduction of the planned release:

$$f_{mp} = \frac{F_{dp}}{(RDF - 1)}\left(1 - \sum_r \left[\frac{f_r}{F_d}\sum_i \left(\frac{C_{ir}}{ECL_i}\right)\right]\right) \quad \textbf{(2.8)}$$

where:

C_{ir} = the measured concentration of radionuclide i in release pathway r that is contributing to radioactivity in the dilution stream.

f_r = the effluent discharge flowrate of release pathway r.

If the entire dilution stream contains detectable activity due to plant operations, whether or not its source is identified, $f_r = F_d$, and C_{ir} is the concentration in the total dilution system. This note does not apply: a) if the RDF of the planned release is ≤ 1; or b) if the release contributing radioactivity to the dilution stream has been accounted for by the assignment of an allocation factor.

Step 5: Determine the maximum radioactivity monitor setpoint concentration.

Based on the values determined in previous steps, the radioactivity monitor setpoint for the planned release is calculated to ensure that the limits of Section 2.1.2 will not be exceeded. Because the radioactivity monitor responds primarily to gamma radiation, the monitor setpoint c_p for release pathway p (in µCi/mL) is based on the concentration of gamma emitters in the waste stream, as follows:

$$c_p = A_p \sum_g c_g \quad \textbf{(2.9)}$$

where:

A_p = an adjustment factor which will allow the setpoint to be established in a practical manner to prevent spurious alarms while allowing a margin between measured concentrations and the limits of Section 2.1.2.

Step 5.a. If the concentration of gamma emitters in the effluent to be released is sufficient that the high alarm setpoint can be established at a level that will prevent spurious alarms, A_p should be calculated as follows:

$$A_p = \frac{1}{RDF} \times ADF = \frac{1}{RDF} \times \frac{\left(F_{dp} + f_{ap}\right)}{f_{ap}} \quad \textbf{(2.10)}$$

where:

ADF = the assured dilution factor.

f_{ap} = the anticipated actual discharge flowrate for the planned release (in gpm), a value less than f_{mp}. The release must then be controlled so that the actual effluent discharge flowrate does not exceed f_{ap} at any time.

Step 5.b. Alternatively, A_p may be calculated as follows:

$$A_p = \frac{ADF - RDF_{n\gamma}}{RDF_{\gamma}} \tag{2.11}$$

Step 5.c. Evaluate the computed value of A_p as follows:

If $A_p \geq 1$, calculate the monitor setpoint, c_p. However, if c_p is within about 10 percent of C_g, it may be impractical to use this value of c_p. This situation indicates that measured concentrations are approaching values which would cause the limits of Section 2.1.2 to be exceeded. Therefore, steps should be taken to reduce potential concentrations at the point of discharge; these steps may include decreasing the planned effluent discharge flowrate, increasing the dilution stream flowrate, postponing simultaneous releases, and/or decreasing the effluent concentrations by further processing the liquid planned for release. Alternatively, allocation factors for the active liquid release pathways may be reassigned. When one or more of these actions has been taken, repeat Steps 1-5 to calculate a new radioactivity monitor setpoint.

If $A_p < 1$, the release may not be made as planned. Consider the alternatives discussed in the paragraph above, and calculate a new setpoint based on the results of the actions taken.

2.3.2.3 Use of the Calculated Setpoint

The setpoint calculated above is in the units μCi/mL. The monitor actually measures a count rate that includes background, so that the calculated setpoint must be converted accordingly:

$$c_p^* = c_p \cdot E_p + B_p \qquad \textbf{(2.8a)}$$

c_p^* = the monitor setpoint as a count rate.

E_p = the monitor calibration factor, in count rate/(μCi/mL). Monitor calibration data for conversion between count rate and concentration may include operational data obtained from determining the monitor response to stream concentrations measured by liquid sample analysis.

B_p = the monitor background count rate. In all cases, monitor background must be controlled so that the monitor is capable of responding to concentrations in the range of the setpoint value.

The count rate units of c_p^*, E_p, and B_p in equation (2.8a) must be the same (cpm or cps).

2.3.3 Setpoints for Monitors on Normally Low-Radioactivity Streams

Radioactivity in these streams (listed in Table 2-4 above) is expected to be at very low levels, generally below detection limits. Accordingly, the purpose of these monitors is to alarm upon the occurrence of significant radioactivity in these streams, and to terminate or divert the release where this is possible.

2.3.3.1 Normal Conditions

When radioactivity in one of these streams is at its normal low level, its radioactivity monitor setpoint should be established as close to background as practical to prevent spurious alarms, and yet alarm should an inadvertent release occur.

2.3.3.2 Conditions Requiring an Elevated Setpoint

Under the following conditions, radionuclide concentrations must be determined and an elevated radioactivity monitor setpoint determined for these pathways:

- For streams that can be diverted or isolated, a new monitor setpoint must be established when it is desired to discharge the stream directly to the dilution water even though the radioactivity in the stream exceeds the level which would normally be diverted or isolated.