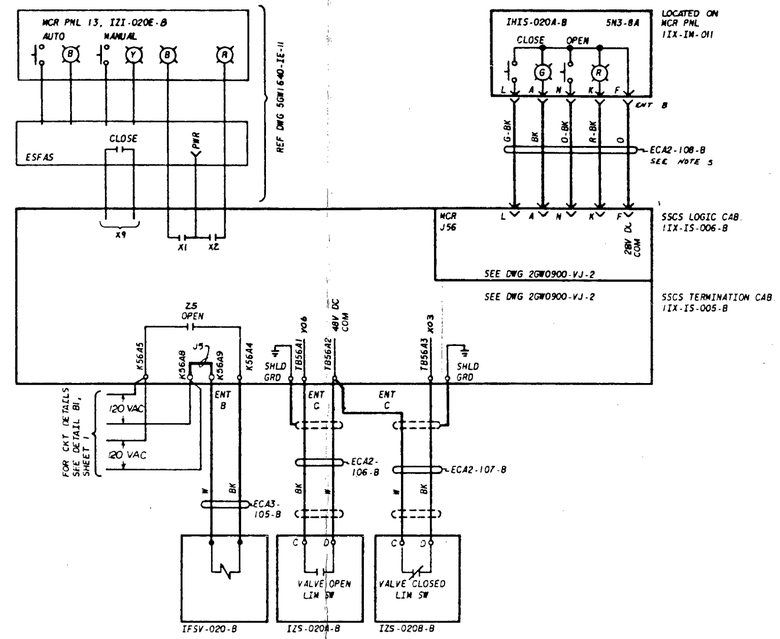

RB INSTR RM CHILLED WATER SUPPLY ISLN VALVE, IFCV-020-B

NOTES:
1 FOR GENERAL NOTES AND REFERENCE DRAWINGS SEE 5GW1740-VJ-01.

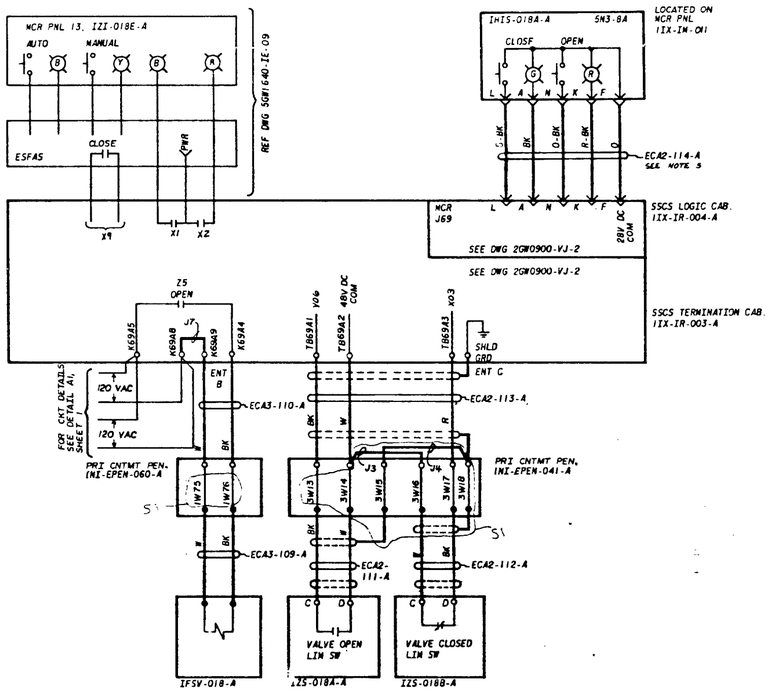

RB INSTR RM CHILLED WATER SUPPLY ISLN VALVE, IFCV-018-A

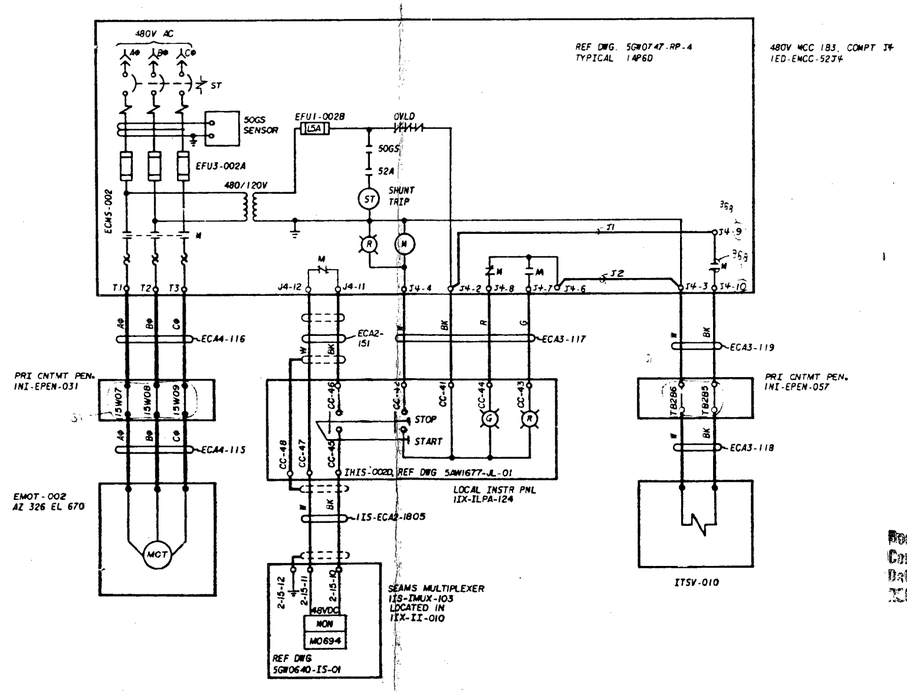

REACTOR BLDG INSTR RM AHU, MAHU-002

PRC APERTURE CARD

Docket # 50-438
Control # 8304050536
Date 3-25-83 of Document
REGULATORY DOCKET FILE

REV	ECN NO.	DATE	DSGN	DRWN	CHKD	SUPV	ENGR	INSP	SUBM	RECM	APPR
2	S1, 868	7-7-80									

ADDED SPLICE SYMBOLS TO VARIOUS PENETRATIONS, & MADE MINOR CHANGES, CHANGED PEN. TERM. NO.

REV	ECN NO.	DATE	DSGN	DRWN	CHKD	SUPV	ENGR	INSP	SUBM	RECM	APPR
1	S18, S1	2-1-79									

CHANGED FUSE SIZE IN MCC PER ECN S18. CHANGED CABLING ARRGT TO ELIMINATE "AND" GATE IN SEAMS SOFTWARE, REMOVED LOCATIONS, PLUS OTHER MINOR CHANGES PER ECN S1.

DSGN: [signature] INSP:
DRWN: [signature] ENGINEER: W. L. Aldredge
CHKD: [signature]
SUPV: [signature]

SCALE EXCEPT AS NOTED

GENERAL
UNIT 1

SYSTEM SCHEMATIC
REACTOR BLDG AIR CONDITIONING
& COOLING SYSTEM

BELLEFONTE NUCLEAR PLANT
TENNESSEE VALLEY AUTHORITY
DIVISION OF ENGINEERING DESIGN

Q

REVIEWED
RCE(VIL) N/A
RE(ELEC) N/A
RM(MECH) N/A

SUBMITTED	RECOMMENDED	APPROVED
W. L. Aldredge	[signature]	R. M. Hodges

KNOXVILLE 3-8-78 88 E 5GW1740-VJ-06 R2

RECORD DRAWING AS CONSTRUCTED

PRINT N 1
SIZE F 1
BR OR PROJ WE EE CE AD ED MD SW BL AE
PRINTS RECD-R

88 E 5GW1740-VJ-06