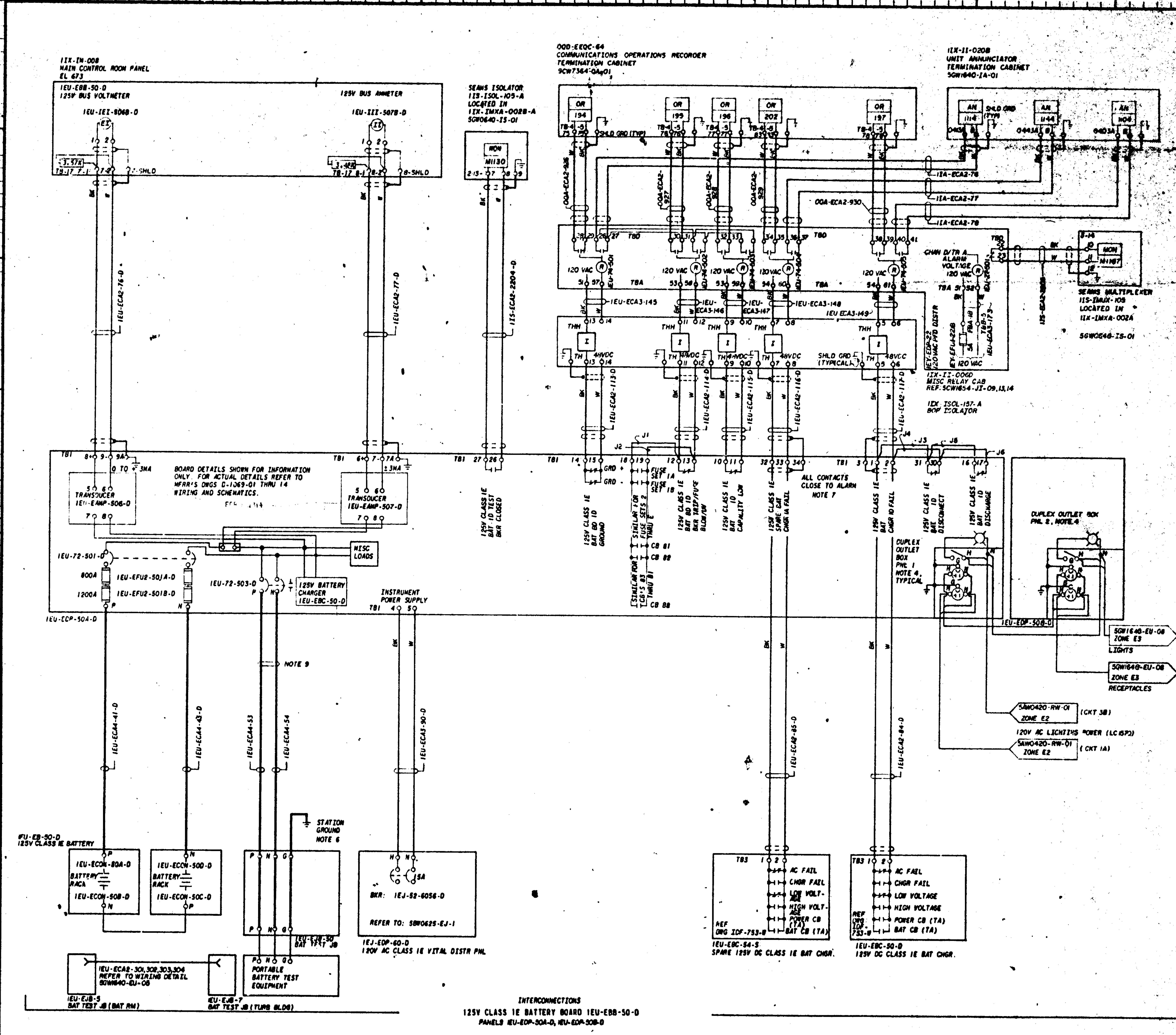


REFERENCE DRAWINGS:

125V DC CLASS 1E PWR DISTR SYS DES CRITERIA .......... N4-EU-0775
120V AC CLASS 1E VITAL PWR DISTR SYS DES CRITERIA .......... N4-EJ-0775
120V AC CLASS 1E AUX PWR DISTR SYS DES CRITERIA .......... N4-EJ-0775
125V DC/120V AC CLASS 1E CONTR PWR KEY DIAGRAM .......... 5GW0620-EU-1
125V DC CLASS 1E PWR DISTR SINGLE LINES .......... 5GW0625-EU-1 THRU 4
120V AC CLASS 1E VITAL/AUX PWR DISTR SINGLE LINES .......... 5GW0625-EJ-1 THRU 4
[illegible]
CABLE PROGRAM .......... SYS EU
COMMUNICATIONS ORA SYS SCHEMATIC .......... 9CW7364-0A-01
COMMUNICATIONS ORA POINT LIST .......... 9CA7365-0A-08-H
UNIT ANN AND SEQL EVENTS RCOR SYS SCHEMATIC .......... 5GW1640-IA-01
SEAMS SYSTEM SCHEMATIC .......... 5GW0640-IS-01

125V DC CLASS 1E BATTERY BOARD CONTRACT 76K4-86932 (INCLUDES 120V AC CLASS 1E VITAL AND AUXILIARY PANELS)
SINGLE LINES .......... D-1069-03,08
WIRING DIAGRAMS .......... D-1069-08 THRU 14
125V DC CLASS 1E BATTERY CHARGER CONTRACT 76K4-38843
WIRING DIAGRAMS .......... IOF-753,753H
125V DC CLASS 1E BATTERY CONTRACT 77-823475

120V AC CLASS 1E VITAL UNINTERRUPTIBLE PWR SUP CONTRACT 76K3-86901
WIRING DIAGRAMS .......... 461-010-0001 (SERIES)
462-010-0001 (SERIES)
B & W NSSS CONTRACT 71C62-54114-2
MAIN CONTROL ROOM WIRING DIAGRAM .......... 02-23724NF
BOP ISOLATOR CONTRACT 79KJ2 922988
ISOLATOR CAB CONNECTION DIAGRAMS .......... 1750202C-100-SERIES
175C202C-300-SERIES
BATTERY DISCHARGE TEST EQUIP CONTRACT 80KJ4-825498 .......... SK-1057
BCT-100-SERIES

SYMBOLS:

| | |
|---|---|
| MON / XXXX | SAFETY RELATED SEAMS MONITORING SYSTEM (XXXX - POINT NUMBER) |
| AN / XXXX | UNIT ANNUNCIATOR MONITORING SYSTEM (XXXX - POINT NUMBER) |
| OR / XXXX | COMMUNICATIONS OPERATIONS RECORDER AND ANNUNCIATION (XXXX - POINT NUMBER) |

NOTES:

1. ALL CIRCUITS SHOWN ON THIS DRAWING ARE CLASS 1E WITH THE EXCEPTION OF ANNUNCIATION LIGHTING AND BATTERY TEST CIRCUITS.
2. THIS DRAWING SHOWS INTERCONNECTION OF INSTRUMENT, CONTROL, ANNUNCIATION, LIGHTING AND BATTERY CIRCUITS ONLY. OTHER POWER CONNECTIONS (V4) ARE SHOWN ON 5GW1640-EU-01 & 02. PORTIONS OF THE SYSTEM SCHEMATIC ARE SHOWN OUT-OF-FUNCTION. THESE OUT-OF-FUNCTION PORTIONS ARE SHOWN FOR INFORMATION WITH REFERENCES PROVIDED TO THE DOCUMENT WHICH CONTROLS THE EQUIPMENT CONFIGURATION.
3. ALL ELECTRICAL EQUIPMENT IS SHOWN IN ITS DE-ENERGIZED STATE.
4. NON-CLASS 1E LIGHTING CIRCUITS ARE ISOLATED BY CONDUIT INSIDE CABINETS. RECEPTACLE SAFETY GROUND IS TIED TO CONDUIT.
5. ALL JUMPER NUMBERS ARE PREFIXED BY THE EQUIPMENT UNID NUMBER AND SYSTEM DESIGNATION "EU". EXAMPLE: 1EU-BOP-504-D-EUJ5.
6. FIELD TO CONNECT GROUND BUS OF BATTERY TEST JUNCTION BOX TO STATION GROUND.
7. ALL ALARM CONTACTS ARE CLOSE-TO-ALARM UNLESS OTHERWISE NOTED.
8. SEE SYSTEM EU CABLE PROGRAM FOR COMPLETE CABLE INFORMATION INCLUDING SPARE CONDUCTORS. ONLY THOSE CONDUCTORS USED ARE SHOWN.
9. 1E BATTERY TEST CIRCUITS ARE DESIGNATED NON-CLASS 1E AND ARE NOT WITHIN THE SCOPE OF THE SEPARATION CRITERIA BECAUSE:
   A. THE BATTERY BOARD IS TAKEN OUT OF SERVICE DURING THE TEST.
   B. THE TEST CIRCUITS ARE NOT USED DURING NORMAL OPERATION.
   C. THE BATTERY TEST BREAKER IS NORMALLY OPEN.
   D. BATTERY TEST BREAKER CLOSURE IS MONITORED AND ALARMED IN THE MAIN CONTROL ROOM ON SEAMS.

PRO APERTURE CARD

Docket # 50-438
Control # 8304050536
Date 3-25-83 of Document
REGULATORY DOCKET FILE

COMPANION DWGS:
5GW1640-EU-01,02,06-09

REVIEWED
RC(CIVIL) N/A
RE(ELEC) [signature]
RM(MECH) N/A
INSPECTED AND APPROVED FOR ISSUE

3 SI — INCORPORATED FCR E 2314.
2 — INCORPORATED FCR E1743, BAT DISCHARGE TEST EQUIP MISC CHANGES.
1 SI — ADDED ALARM ISOLATION DETAILS, REVISED JUMPER NO'S.

SCALE EXCEPT AS NOTED

GENERAL
UNIT 1

# SCHEMATIC DIAGRAM
# 125V CLASS 1E DC POWER DISTRIBUTION SYSTEM

BELLEFONTE NUCLEAR PLANT
TENNESSEE VALLEY AUTHORITY
DIVISION OF ENGINEERING DESIGN

Q

SUBMITTED — RECOMMENDED — APPROVED

KNOXVILLE · 2 78 · 88 E 5GW1640-EU-04