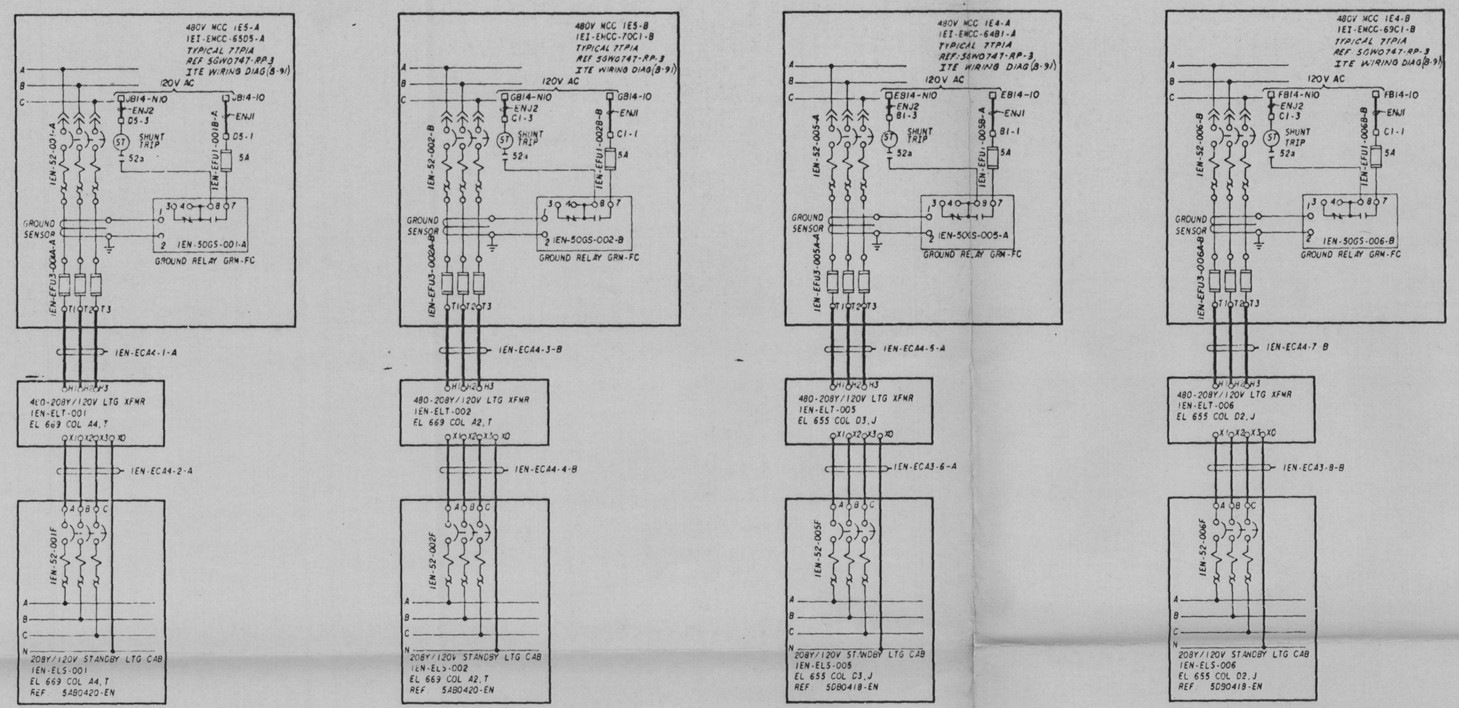

NOTES: SYSTEM EN WIRING DIAGRAMS DOCUMENT ONLY THE FEEDERS AND ASSOCIATED CONTROL CIRCUITS OF THE EN SYSTEM.

1. PORTIONS OF THE WIRING DIAGRAMS ARE SHOWN OUT-OF-FUNCTION. THESE OUT-OF-FUNCTION PORTIONS ARE SHOWN FOR INFORMATION WITH REFERENCES PROVIDED TO THE DOCUMENT WHICH CONTROLS THE EQUIPMENT.
2. SYSTEM JUMPERS ARE FIELD INSTALLED AND ARE SHOWN IN FUNCTION. THESE JUMPERS ARE DESIGNATED "J" PRECEDED BY SYSTEM DESIGNATION. JUMPER DESIGNATIONS ARE FORMED BY PREFIXING THE J NUMBER WITH THE SYSTEM DESIGNATION AND THE UNID OF THE ENCLOSURE EXAMPLE: 1EO-EMCC-70-B-ENJ1
3. SEE GOULD/ITE, TVA CONTRACT T6K5-86242 FOR 480V MCC LAYOUT DRAWINGS AND WIRING DIAGRAMS.
4. ITE WIRING DIAGRAMS SHOWN IN PARENTHESIS ARE PREFIXED BY WD-53893.

REFERENCE DRAWINGS AND DOCUMENTS

MCC	CIRCUIT SCHEDULE
1E4-A	5DC1762-EI
1E4-B	5DC1763-EI
1E5-A	5AC1766-EI
1E5-B	5AC1767-EI

ITE COMPARTMENT WIRING DIAGRAMS WD-53893
480V MCC COMPARTMENT TYPICAL SCHEMATICS SGW0747-RP
LIGHTING PANEL CIRCUIT SCHEDULE

SYMBOLS

□ - 480V MCC COMPARTMENT TERMINAL

PRC APERTURE CARD

Docket #50-438
Control # 8304050536
Date 3-25-83 of Document
REGULATORY DOCKET FILE

REV NO	ECN NO	DATE	DSGN	DRWN	CHKD	SUP	ENGR	INSP	SUBMITTED	APPD

DSGN G.E. McWhorter
DRWN R.A.J.
CHKD [illegible]
SUP W. D. Sutton
INSP
ENGINEER W. L. Aldridge

SCALE EXCEPT AS NOTED

GENERAL
UNIT 1

WIRING DIAGRAM
STANDBY AC
LIGHTING FEEDERS

REVIEWED
RC(CIVIL)
RE(ELEC)
RM(MECH)

INSPECTED AND APPROVED FOR ISSUE

BELLEFONTE NUCLEAR PLANT
TENNESSEE VALLEY AUTHORITY
DIVISION OF ENGINEERING DESIGN

Q

SUBMITTED	RECOMMENDED	APPROVED
W. L. Aldridge	[illegible]	[illegible]

KNOXVILLE 2-7-78 88 E SGW1747-EN-01 R0

RECORD DRAWING AS CONSTRUCTED