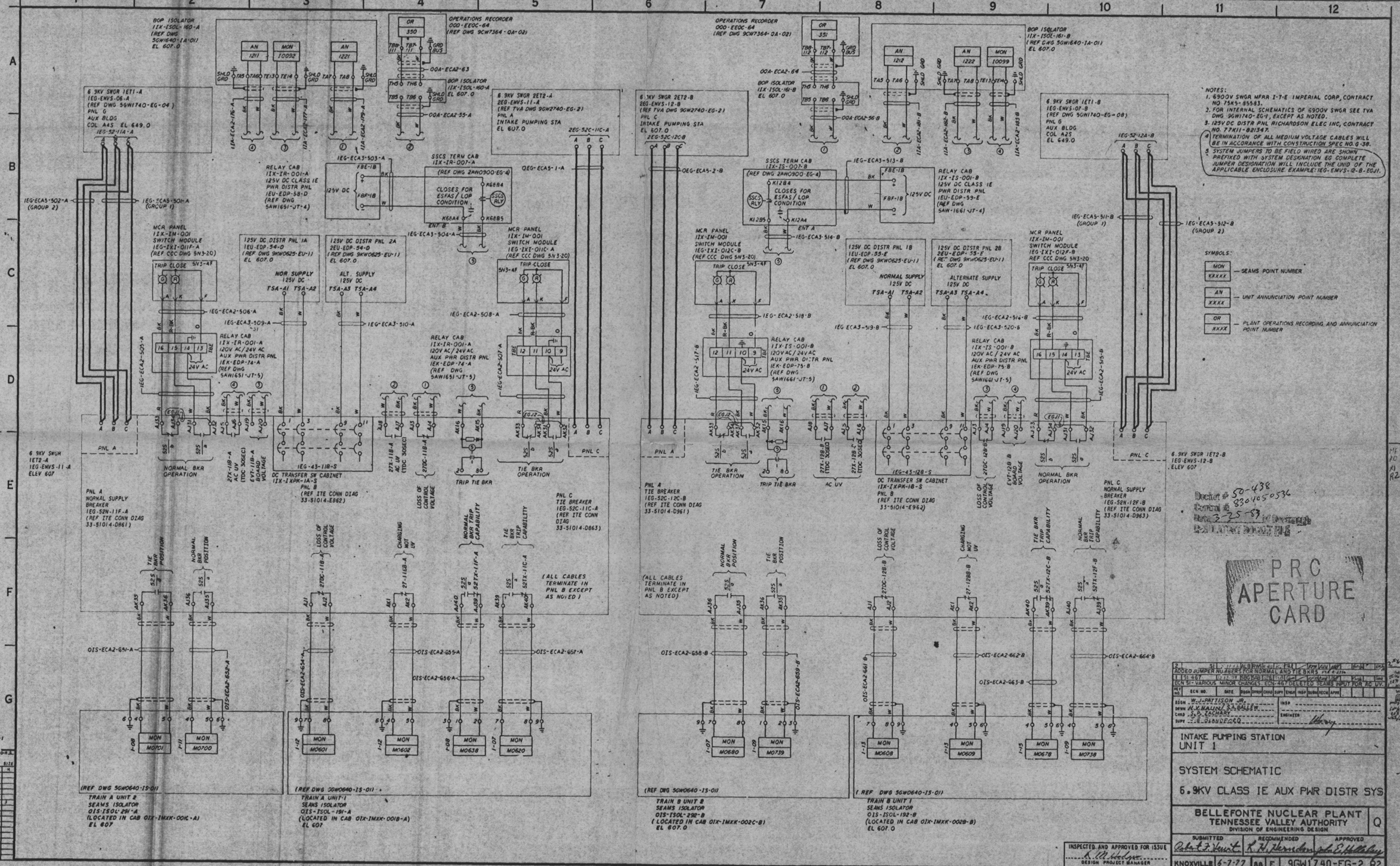
6 9KV SWGR 1ET1-A
1EG-ENVS-06-A
(REF DWG 9GW1740-EG-04)
PNL G
AUX BLDG
COL A45 EL 649.0
BOP ISOLATOR
1IX-ISOL-160-A
(REF DWG 9GW1640-1A-01)
EL 607.0
OPERATIONS RECORDER
000-EE0C-64
(REF DWG 9CW7364-0A-02)
6 9KV SWGR 2ET2-A
2EG-ENVS-11-A
(REF TVA DWG 9GW2740-EG-2)
PNL A
INTAKE PUMPING STA
EL 607.0
6 9KV SWGR 2ET2-B
2EG-ENVS-12-B
(REF TVA DWG 9GW2740-EG-2)
PNL C
INTAKE PUMPING STA
EL 607.0
6.9KV SWGR 1ET1-B
1EG-ENVS-07-B
(REF DWG 9GW1740-EG-08)
PNL G
AUX BLDG
COL A25
EL 649.0
SSCS TERM CAB
1IX-IR-001-A
(REF DWG 2AW0900-EG-4)
CLOSES FOR ESFAS/LOP CONDITION
RELAY CAB
1IX-IR-001-A
125V DC CLASS 1E
PWR DISTR PNL
1EU-EDP-58-D
(REF DWG 5AW1651-JT-4)
SSCS TERM CAB
1IX-IS-001-B
(REF DWG 2AW0900-EG-4)
RELAY CAB
1IX-IS-001-B
125V DC CLASS 1E
PWR DISTR PNL
1EU-EDP-59-E
(REF DWG 5AW1661-JT-4)
MCR PANEL
1IX-IM-001
SWITCH MODULE
1EG-IXI-011F-A
(REF CCC DWG 5N3-20)
125V DC DISTR PNL 1A
2EU-EDP-54-D
(REF DWG 9KW0625-EU-1)
EL 607.0
NOR SUPPLY
125V DC
TSA-A1 TSA-A2
125V DC DISTR PNL 2A
2EU-EDP-54-D
(REF DWG 9KW0625-EU-1)
EL 607.0
ALT. SUPPLY
125V DC
TSA-A3 TSA-A4
125V DC DISTR PNL 1B
1EU-EDP-55-E
(REF DWG 9KW0625-EU-1)
EL 607.0
NORMAL SUPPLY
125V DC
TSA-A1 TSA-A2
125V DC DISTR PNL 2B
2EU-EDP-55-F
(REF DWG 9KW0625-EU-1)
EL 607.0
ALTERNATE SUPPLY
125V DC
TSA-A3 TSA-A4
RELAY CAB
1IX-IR-001-A
120V AC/24V AC
AUX PWR DISTR PNL
1EK-EDP-74-A
(REF DWG 5AW1651-JT-5)
RELAY CAB
1IX-IS-001-B
120V AC/24V AC
AUX PWR DISTR PNL
1EK-EDP-75-B
(REF DWG 5AW1661-JT-5)
PNL A
NORMAL SUPPLY
BREAKER
1EG-52N-11F-A
(REF ITE CONN DIAG 33-51014-D861)
PNL A
TIE BREAKER
1EG-52C-12C-B
(REF ITE CONN DIAG 33-51014-D961)
PNL C
TIE BREAKER
1EG-52C-11C-A
(REF ITE CONN DIAG 33-51014-D863)
PNL C
NORMAL SUPPLY
BREAKER
1EG-52N-12F-B
(REF ITE CONN DIAG 33-51014-D963)
6.9KV SWGR 1ET2-A
1EG-ENVS-11-A
ELEV 607
6.9KV SWGR 1ET2-B
1EG-ENVS-12-B
ELEV 607
DC TRANSFER SW CABINET
1IX-IXPK-1A-S
PNL B
(REF ITE CONN DIAG 33-51014-E862)
DC TRANSFER SW CABINET
1IX-IXPK-1B-S
PNL B
(REF ITE CONN DIAG 33-51014-E962)
NORMAL BKR OPERATION
TIE BKR OPERATION
TRIP TIE BKR
AC UV
LOSS OF CONTROL VOLTAGE
CHARGING MOT UV
NORMAL BKR TRIP CAPABILITY
TIE BKR TRIP CAPABILITY
TIE BKR POSITION
NORMAL BKR POSITION
(ALL CABLES TERMINATE IN PNL B EXCEPT AS NOTED)
(REF DWG 5GW0640-1S-01)
TRAIN A UNIT 2
SEAMS ISOLATOR
OIS-ISOL-291-A
(LOCATED IN CAB 01X-IMXK-001C-A)
EL 607
TRAIN A UNIT 1
SEAMS ISOLATOR
OIS-ISOL-191-A
(LOCATED IN CAB 01X-IMXK-001B-A)
EL 607
TRAIN B UNIT 2
SEAMS ISOLATOR
OIS-ISOL-292-B
(LOCATED IN CAB 01X-IMXK-002C-B)
EL 607.0
TRAIN B UNIT 1
SEAMS ISOLATOR
OIS-ISOL-192-B
(LOCATED IN CAB 01X-IMXK-002B-B)
EL 607.0
NOTES:
1. 6900V SWGR MFRR I-T-E IMPERIAL CORP, CONTRACT NO 75K5-85583.
2. FOR INTERNAL SCHEMATICS OF 6900V SWGR SEE TVA DWG 9GW1740-EG-1, EXCEPT AS NOTED.
3. 125V DC DISTR PNL RICHARDSON ELEC INC, CONTRACT NO. 77K11-821347.
4. TERMINATION OF ALL MEDIUM VOLTAGE CABLES WILL BE IN ACCORANCE WITH CONSTRUCTION SPEC NO 2-38.
5. SYSTEM JUMPERS TO BE FIELD WIRED ARE SHOWN PREFIXED WITH SYSTEM DESIGNATION EG COMPLETE JUMPER DESIGNATION WILL INCLUDE THE UNID OF THE APPLICABLE ENCLOSURE. EXAMPLE: 1EG-EMVS-12-B-EG11.
SYMBOLS:
MON XXXXX — SEAMS POINT NUMBER
AN XXXX — UNIT ANNUNCIATION POINT NUMBER
OR XXXX — PLANT OPERATIONS RECORDING AND ANNUNCIATION POINT NUMBER
Docket # 50-438
Control # 8304050536
Date 3-25-83
DISTRIBUTION:
PRC APERTURE CARD
ADDED JUMPER NUMBERS FOR NORMAL AND TIE BKRS
ECN 51-VARIOUS MINOR CHANGES. ECN-467 DELETED SEAMS INPUT FOR AC UV.
DSGN W.J. PATTISON JR.
DRWN H.V. WALING
CHKD J.S. ZACHARY
SUPV
ENGR
INTAKE PUMPING STATION
UNIT 1
SYSTEM SCHEMATIC
6.9KV CLASS 1E AUX PWR DISTR SYS
BELLEFONTE NUCLEAR PLANT
TENNESSEE VALLEY AUTHORITY
DIVISION OF ENGINEERING DESIGN
Q
SUBMITTED
RECOMMENDED
APPROVED
KNOXVILLE 6-7-77 88 E 9GW1740-EG-2 R2
RECORD DRAWING AS CONSTRUCTED
INSPECTED AND APPROVED FOR ISSUE
DESIGN PROJECT MANAGER
THIS DRAWING IS UNDER CONFIGURATION CONTROL