RH-TRAMPAC

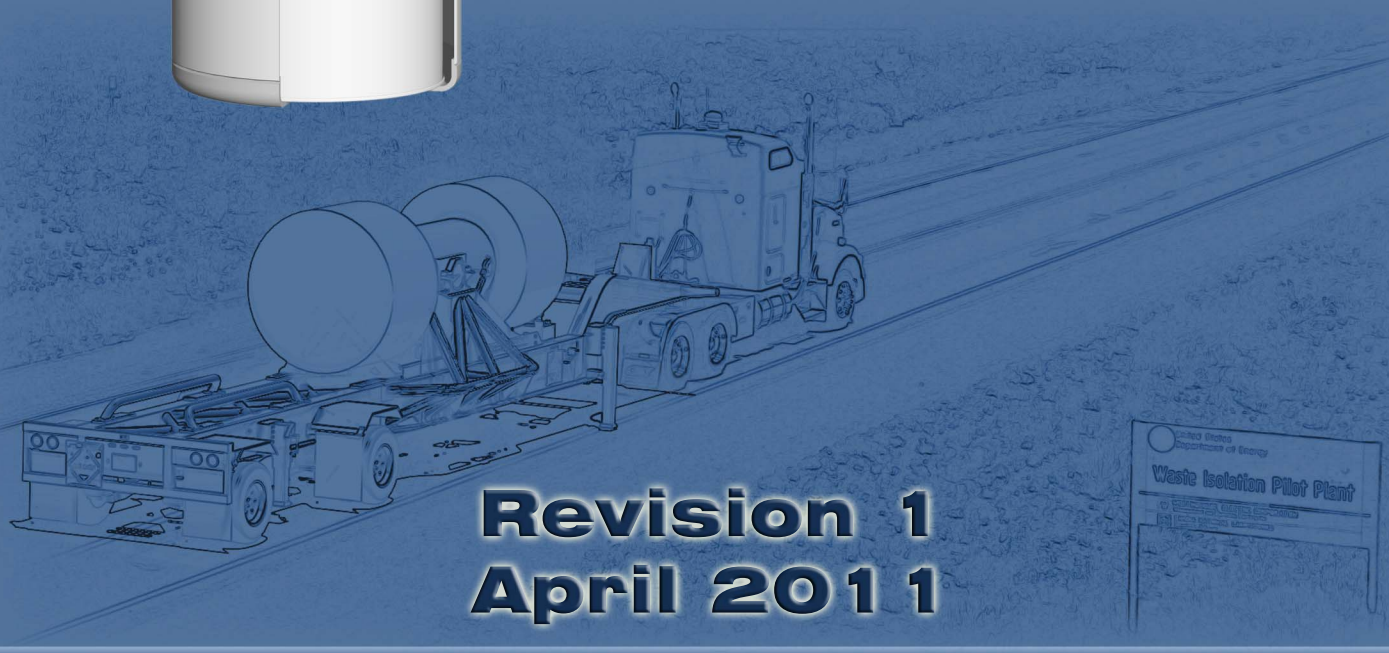

Revision 1
April 2011

This page intentionally left blank to facilitate duplex printing.

TABLE OF CONTENTS

1.0 INTRODUCTION 1.1-1
1.1 Scope 1.1-1
1.2 Purpose 1.2-1
1.3 Requirements 1.3-1
1.4 Methods of Compliance 1.4-1
1.4.1 Visual Examination 1.4-1
1.4.2 Visual Inspection 1.4-1
1.4.3 Radiography 1.4-1
1.4.4 Records and Database Information 1.4-2
1.4.5 Administrative and Procurement Controls 1.4-2
1.4.6 Measurement 1.4-2
1.4.7 Sampling Program 1.4-2
1.5 RH-TRUCON Document 1.5-1
1.5.1 Required Elements 1.5-1
1.5.2 Use and Approval 1.5-2
1.6 Compliance Program 1.6-1
1.6.1 Transportation Certification Official 1.6-1
1.6.2 U.S. Department of Energy-Carlsbad Field Office 1.6-1
1.7 Quality Assurance 1.7-1

2.0 CONTAINER AND PHYSICAL PROPERTIES REQUIREMENTS 2.1-1
2.1 Authorized Payload Container 2.1-1
2.1.1 Requirements 2.1-1
2.1.2 Methods of Compliance and Verification 2.1-1
2.2 Container/Package Weight 2.2-1
2.2.1 Requirements 2.2-1
2.2.2 Methods of Compliance and Verification 2.2-1
2.3 Container Marking 2.3-1
2.3.1 Requirements 2.3-1
2.3.2 Methods of Compliance and Verification 2.3-1
2.4 Filter Vents 2.4-1
2.4.1 Requirements 2.4-1
2.4.2 Methods of Compliance and Verification 2.4-2
2.5 Residual Liquids 2.5-1
2.5.1 Requirements 2.5-1

2.5.2 Methods of Compliance and Verification 2.5-1
2.6 Sharp or Heavy Objects 2.6-1
2.6.1 Requirements 2.6-1
2.6.2 Methods of Compliance and Verification 2.6-1
2.7 Sealed Containers 2.7-1
2.7.1 Requirements 2.7-1
2.7.2 Methods of Compliance and Verification 2.7-1
2.8 Specification for RH-TRU Waste Canisters 2.8-1
2.8.1 RH-TRU Waste Canister 2.8-1
2.8.2 Neutron Shielded Canister 2.8-4

3.0 NUCLEAR PROPERTIES REQUIREMENTS 3.1-1
3.1 Nuclear Criticality 3.1-1
3.1.1 Requirements 3.1-1
3.1.2 Methods of Compliance and Verification 3.1-4
3.2 Radiation Dose Rates 3.2-1
3.2.1 Requirements 3.2-1
3.2.2 Methods of Compliance and Verification 3.2-1

4.0 CHEMICAL PROPERTIES REQUIREMENTS 4.1-1
4.1 Pyrophoric Materials 4.1-1
4.1.1 Requirements 4.1-1
4.1.2 Methods of Compliance and Verification 4.1-1
4.2 Explosives, Corrosives, and Compressed Gases 4.2-1
4.2.1 Requirements 4.2-1
4.2.2 Methods of Compliance and Verification 4.2-1
4.3 Chemical Composition 4.3-1
4.3.1 Requirements 4.3-1
4.3.2 Methods of Compliance and Verification 4.3-1
4.4 Chemical Compatibility 4.4-1
4.4.1 Requirements 4.4-1
4.4.2 Methods of Compliance and Verification 4.4-1

5.0 GAS GENERATION REQUIREMENTS 5.1-1
5.1 Flammable (Gas/VOC) Concentration Limits 5.1-1
5.1.1 Requirements 5.1-1
5.1.2 Methods of Compliance and Verification 5.1-1
5.1.3 Flammable Gas Generation Rates 5.1-6

5.1.4 Decay Heat Limits 5.1-7
5.1.5 Flammable VOCs 5.1-15
5.2 Aspiration and Venting 5.2-1
5.3 Pressure Limit 5.3-1

6.0 PAYLOAD ASSEMBLY CRITERIA 6.1-1
6.1 Requirements 6.1-1
6.2 Methods of Compliance and Verification 6.2-1
6.2.1 Procedure for Certification of Individual RH-TRU Canisters 6.2-1
6.2.2 Procedure for Certification of an RH-TRU 72-B Package 6.2-3
6.2.3 Shipments Designated as Controlled Shipments 6.2-4

7.0 QUALITY ASSURANCE 7.1-1
7.1 Requirements for Payload Compliance 7.1-1
7.2 QA Compliance and Verification 7.2-1

LIST OF TABLES

Table 2.2-1 – Canister Maximum Gross Weight Limits 2.2-1
Table 2.2-2 – RH-TRU 72-B Maximum Gross Weight Limit 2.2-1
Table 2.4-1 – Minimum Filter Vent Specifications 2.4-1
Table 2.8-1 – Canister Dimensions 2.8-1
Table 2.8-2 – Canister Materials of Construction 2.8-1
Table 2.8-3 – Canister Weights 2.8-3
Table 2.8-4 – RH-TRU Waste Canister: Material Content Forms Authorized for Transport . 2.8-3
Table 2.8-5 – Neutron Shielded Canister Shield Insert Dimensions 2.8-4
Table 2.8-6 – Neutron Shielded Canister Shield Insert Materials of Construction 2.8-4
Table 2.8-7 – Neutron Shielded Canister Weights 2.8-7
Table 2.8-8 – Neutron Shielded Canister: Material Content Forms Authorized for Transport 2.8-7
Table 3.1-1 – Summary of FGE and FEM Limits 3.1-3
Table 3.2-1 – Dose Rate Survey Form 3.2-5
Table 3.2-2 – Summary of Hypothetical Accident Condition Curie Limits for Each Radionuclide for Canisters without Neutron Shielding 3.2-9
Table 3.2-3 – Summary of Hypothetical Accident Condition Curie Limits for Each Radionuclide for Neutron Shielded Canisters 3.2-13
Table 4.3-1 – Table of Allowable Materials for RH-TRU Waste 4.3-2

Table 5.1-1 – Pu-239 Fissile Gram Equivalent, U-235 Fissile Equivalent Mass, Decay Heat, and Specific Activity of Selected Radionuclides 5.1-9

Table 5.1-2 – Flammable VOCs 5.1-15

Table 6.2-1 – Payload Transportation Certification Document (PTCD) 6.2-6

Table 6.2-2 – Site Control Checklist for Controlled Shipments* 6.2-9

Table 6.2-3 – Receiving Site Control Checklist for Controlled Shipments* 6.2-10

LIST OF FIGURES

Figure 2.8-1 – RH-TRU Canister 2.8-2

Figure 2.8-2 – NS15 Neutron Shielded Canister 2.8-5

Figure 2.8-3 – NS30 Neutron Shielded Canister 2.8-6

Figure 3.2-1 – Dose Rate Measurement Locations 3.2-4

Figure 5.1-1 – Methodology for Compliance with Flammable (Gas/VOC) Concentration Limits 5.1-3

LIST OF ABBREVIATIONS AND ACRONYMS

°C	degrees Celsius
°F	degrees Fahrenheit
AFGC	allowable flammable gas concentration
AFGGR	allowable flammable gas generation rate
ANS	American Nuclear Society
ANSI	American National Standards Institute
Be	beryllium
BeO	beryllium oxide
CBFO	Carlsbad Field Office
CFR	Code of Federal Regulations
DOE	U.S. Department of Energy
EPA	U.S. Environmental Protection Agency
FEM	fissile equivalent mass
FGE	fissile gram equivalent
FGGR	flammable gas generation rate
g-mole/sec	gram-mole(s) per second
HAC	hypothetical accident conditions
HDPE	high-density polyethylene
IV	inner vessel
ID	identification
MLEL	mixture lower explosive limit
mrem	milliröentgen equivalent man
NCT	normal conditions of transport
NRC	U.S. Nuclear Regulatory Commission
OC	outer cask
PTCD	Payload Transportation Certification Document
ppm	parts per million
Pu	plutonium
QA	quality assurance
rem	röentgen equivalent man
RH	remote-handled
RH-TRAMPAC	*Remote-Handled Transuranic Waste Authorized Methods for Payload Control*
RH-TRUCON	*RH-TRU Waste Content Codes*
SAR	*Safety Analysis Report*
TCO	Transportation Certification Official
TRAMPAC	*TRU Waste Authorized Methods for Payload Control* (programmatic or waste-specific data package)
TRU	Transuranic
U	Uranium
VOC	volatile organic compound
WIPP	Waste Isolation Pilot Plant

LIST OF RH-TRU PAYLOAD APPENDICES

The RH-TRU Payload Appendices contain supporting documentation and other reference materials for the limits and compliance methods defined in the RH-TRAMPAC. All appendices referenced in the RH-TRAMPAC are found in the RH-TRU Payload Appendices. The table of contents for the RH-TRU Payload Appendices is shown below.

1.0 INTRODUCTION

2.0 GAS GENERATION METHODOLOGY

- 2.1 Radiolytic G Values for Waste Materials
- 2.2 G Values for RH-TRU Waste
- 2.3 Shipping Period – General Case
- 2.4 Shipping Period – Controlled Shipments
- 2.5 Compliance Methodology for Gas Generation Requirements

3.0 ASSESSMENT METHODS

- 3.1 Gas Generation Test Plan for Remote-Handled Transuranic (RH-TRU) Waste Containers
- 3.2 Summary of the Flammability Assessment Methodology Program

4.0 SUPPORTING EVALUATIONS

- 4.1 Chemical Compatibility of Waste Forms
- 4.2 Free Halides in the RH-TRU 72-B Payload – Source Term and Release Rate Estimates
- 4.3 Payload Compatibility with Butyl Rubber O-Ring Seals
- 4.4 Volatile Organic Compounds (VOCs) in the RH-TRU 72-B Payload – Source Term and Release Rate Estimates
- 4.5 Biological Activity Assessment
- 4.6 Thermal Stability of Payload Materials at Transport Temperatures

5.0 PAYLOAD CONTAINER DESIGN BASIS EVALUATIONS

- 5.1 Description of Neutron Shielded Canister

1.0 INTRODUCTION

The Remote-Handled Transuranic Waste Authorized Methods for Payload Control (RH-TRAMPAC) is the governing document for shipments in the RH-TRU 72-B packaging. All users of the RH-TRU 72-B shall comply with all payload requirements outlined in this document, using one or more of the methods described. Supporting information for the limits and compliance methods defined in this document is contained in the RH-TRU Payload Appendices[1].

1.1 Scope

The RH-TRAMPAC defines the authorized contents for the RH-TRU 72-B packaging.

[1] U.S. Department of Energy (DOE), *RH-TRU Payload Appendices*, current revision, U.S. Department of Energy, Carlsbad Field Office, Carlsbad, New Mexico.

This page intentionally left blank.

1.2 Purpose

The purposes of the RH-TRAMPAC are to:

- Define the applicable requirements for a payload to be transported in the RH-TRU 72-B packaging
- Describe the acceptable methods that shall be used to prepare and characterize the remote-handled (RH) transuranic (TRU) waste or other payload materials prior to transport in an RH-TRU 72-B packaging
- Identify the quality assurance (QA) program that shall be applied to these methods.

This page intentionally left blank.

1.3 Requirements

Requirements are established to ensure compliance of the payload with the transportation parameters of the RH-TRU 72-B packaging. The RH-TRAMPAC defines payload requirements under the following categories:

- Container and physical properties (Section 2.0)
- Nuclear properties (Section 3.0)
- Chemical properties (Section 4.0)
- Gas generation (Section 5.0)
- Payload assembly (Section 6.0)
- Quality assurance (Section 7.0).

This page intentionally left blank.

1.4 Methods of Compliance

This section describes all allowable methods to be used to determine compliance with each payload requirement and the controls imposed on the use of each method. Each generator or storage site shall select and implement a single method, or a combination of methods, to ensure that the payload is compliant with each requirement and is qualified for shipment. These methods shall be delineated in a programmatic or waste-specific data package TRU Waste Authorized Methods for Payload Control (TRAMPAC).

Each shipper shall document and demonstrate compliance with the RH-TRAMPAC by one of the following methods:

- A programmatic TRAMPAC, which defines the process in which payload compliance is met, will be prepared by the shipper and approved by the U.S. Department of Energy (DOE) Carlsbad Field Office (CBFO). Implementing procedures of the TRAMPAC will be reviewed by the DOE-CBFO for completeness and compliance as part of the audit process.
- For small quantity shipments, a waste-specific data package TRAMPAC will be prepared by the shipper and approved by the DOE-CBFO. The waste data are evaluated against the requirements in this document. A small quantity shipment may be made by any waste generator who does not have a DOE-CBFO approved programmatic TRAMPAC or a waste generator with a limited number of containers not addressed in their programmatic TRAMPAC.

A summary of methods of compliance that shall be used for RH-TRU 72-B payload control is provided in the following sections.

1.4.1 Visual Examination

Visual examination at the time of waste generation may be used to qualify wastes for transport. The operator(s) of a waste generating area shall visually examine the physical form of the waste according to site-/equipment-specific procedures and remove all prohibited waste forms prior to its placement in the payload container. Observation of the waste generation process by an independent operator may be used as an independent verification of the compliance of the waste prior to closure of the payload container.

1.4.2 Visual Inspection

Visual inspection may be used to evaluate compliance with specific restrictions (e.g., visual inspection of payload container marking). Visual inspection by a second operator may be considered independent verification.

1.4.3 Radiography

Radiography, or equivalent nondestructive examination techniques, may be used as an independent verification to qualify waste for transport after the container is closed (e.g., to nondestructively examine the physical form of the waste and to verify the absence of prohibited waste forms). A radiography system normally consists of an X-ray-producing device, an imaging system, an enclosure for radiation protection, a waste container handling system, an

audio/video recording system, and an operator control and data acquisition station. Some variation within a given nondestructive examination system will exist between sites. Site/equipment-specific QA and quality control procedures should ensure that radiography system operator(s) are properly trained and qualified.

1.4.4 Records and Database Information

Information obtained from existing site records and/or databases or knowledge of process may be used to qualify waste for transport (e.g., as a basis for reporting the absence of prohibited waste forms within waste containers). This information may be verified using radiography (Section 1.4.3) and/or a waste sampling program (Section 1.4.7).

1.4.5 Administrative and Procurement Controls

Site-specific administrative and procurement controls may be used to show that the payload container contents are monitored and controlled and to demonstrate the absence of prohibited items.

1.4.6 Measurement

Direct measurement or evaluation based on analysis using direct measurement may be used to qualify waste (e.g., direct measurement of the weight or analysis of assay data to determine decay heat).

1.4.7 Sampling Program

Sampling programs comprised of the statistical application of other methods identified in this section may be used as an independent verification of compliance. A site-specific sampling program designed to address all payload requirements needing verification is recommended.

1.5 RH-TRUCON Document

The Remote-Handled Transuranic Content Codes (RH-TRUCON) document[1] is a catalog of RH-TRU 72-B authorized contents and a description of the methods used to demonstrate compliance with the RH-TRAMPAC.

1.5.1 Required Elements

Each content code within the RH-TRUCON document must contain the following elements:

CONTENT CODE: Identifies the two-letter site abbreviation that designates the physical location of the waste and the three-digit code that designates the physical and chemical form of the waste. Content code identifiers are defined in the RH-TRUCON.

CONTENT DESCRIPTION: Identifies the physical form of the waste (e.g., describing whether it is inorganic or organic, solidified or solid).

GENERATING SITE: Provides the location of waste generation.

STORAGE SITE: Provides the location of the waste, if the location is different from the generating site. If the generating site and storage site are the same, this section is not required to be included in the content code.

WASTE DESCRIPTION: Provides basic information regarding the nature and/or main components of the waste.

GENERATING SOURCE(S): Lists processes and/or buildings at each site that generate the waste in each content code.

WASTE FORM: Provides more detailed information on the waste contents, how the waste is processed, and/or specific information about the chemistry of constituents.

WASTE PACKAGING: Describes, in detail, techniques necessary for waste packaging in a given content code. This includes a description of the waste confinement layers (the number of layers of confinement used in packaging waste; the mechanism for bag, can, or container closure; the size and shape of any inner containers); an estimate of the void volume within each confinement layer; the number and type of filters (if present) in each confinement layer; and the number of inner containers (if present) per RH-TRU waste canister.

METHODS FOR ISOTOPIC DETERMINATION: Describes the types of radioactive measurement techniques or other methods used to obtain fissile material content and decay heat values for a particular content code.

RESIDUAL LIQUIDS: Describes the procedures used to ensure that the limit imposed on residual liquids (<1% by volume) is met for each content code.

EXPLOSIVES/COMPRESSED GASES: Identifies the methods used to preclude the presence of explosives or compressed gases.

[1] U.S. Department of Energy (DOE), *Remote-Handled Transuranic Content Codes (RH-TRUCON)*, current revision, DOE/WIPP 90-045, U.S. Department of Energy, Carlsbad Field Office, Carlsbad, New Mexico.

PYROPHORICS: Describes the controls in place to ensure that pyrophoric materials in the waste are not present in quantities greater than 1% by weight.

CORROSIVES: Describes the controls in place to ensure that corrosive materials in the waste either are not present or are neutralized or immobilized prior to placement in a container.

CHEMICAL COMPATIBILITY: Describes the controls in place to ensure chemical compatibility for the waste contents and the RH-TRU 72-B packaging. All chemicals/materials in the waste in quantities greater than 1% by weight for a specific content code are restricted to the list of allowable chemicals/materials (Table 4.3-1). The total quantity of trace chemicals/materials in the payload container is limited to 5% as specified in Section 4.3.

CHEMICAL LIST: Lists the chemicals/materials that may be present in the content code in quantities greater than 1% (weight) (used in the chemical compatibility evaluation) and less than or equal to 1% (weight) and, additionally, identifies the predominant chemicals/materials or relevant quantities (% weight) of specific materials (used in the G value determination).

G VALUE: Defines the G value (gas generation potential) for the content code based on the chemicals/materials present in the waste.

ADDITIONAL CRITERIA: Provides details on how the waste qualifies for shipment by meeting additional transport requirements (e.g., venting containers).

MAXIMUM ALLOWABLE FLAMMABLE GAS GENERATION RATES: Specifies the flammable gas generation rate (FGGR) limits for the content code. The FGGR limits are calculated using information from the Waste Packaging parameter above.

MAXIMUM ALLOWABLE DECAY HEAT LIMITS: Specifies the decay heat limits for the content code. The decay heat limits are calculated using information from the Waste Form, Waste Packaging, Methods for Isotopic Determination, and G Value parameters above. Decay heat limits based on dose-dependent G values are also specified, as applicable.

1.5.2 Use and Approval

All containers must have a content code approved by the Waste Isolation Pilot Plant (WIPP) RH-TRU Payload Engineer to be eligible for shipment. Any site requiring the transportation of RH-TRU waste in the RH-TRU 72-B that is not described in an approved content code must request the revision or addition of a content code by submitting a request in writing to the WIPP RH-TRU Payload Engineer.

The WIPP RH-TRU Payload Engineer has the authority to approve a content code request only if compliance with the transportation requirements of the RH-TRAMPAC can be demonstrated. Any submittal not meeting the requirements of the RH-TRAMPAC shall not be approved for inclusion in the RH-TRUCON document or be used as the basis for a shipment in the RH-TRU 72-B. The WIPP RH-TRU Payload Engineer does not have the authority to change the transportation requirements for the RH-TRU 72-B as specified in the RH-TRAMPAC without approval from the U.S. Nuclear Regulatory Commission (NRC).

The process for requesting a content code addition or revision is as follows:

1. The site prepares in writing a request containing sufficient information to satisfy all of the necessary elements identified in Section 1.5.1. If the request is for a content code

revision, only the revised elements require preparation and documentation. The site shall ensure that the information submitted in the form of a content code addition or revision accurately describes the waste and waste generating processes based on site knowledge.

2. The site submits the request (e.g., draft content code or revised content code elements) in writing to the WIPP RH-TRU Payload Engineer for review.
3. Under the direction of the WIPP RH-TRU Payload Engineer, the submittal shall be reviewed for completeness and satisfactory demonstration of compliance with all transportation requirements of the RH-TRAMPAC. As part of this review, the WIPP RH-TRU Payload Engineer responsibilities may include a review to ensure that the information required for each of the previously identified elements (Section 1.5.1) is complete, compliance with the list of allowable chemicals/materials pursuant to Section 4.3 is evaluated, and confinement layer release rates and G values are appropriately applied in the calculation of flammable gas generation limits pursuant to the methodology referenced in Section 5.1. The WIPP RH-TRU Payload Engineer shall not approve any submittal that does not demonstrate compliance with every transportation requirement for the RH-TRU 72-B.
4. Upon completion of the review, the WIPP RH-TRU Payload Engineer shall send formal written notification to the site indicating the status of the request. If the request is denied, the WIPP RH-TRU Payload Engineer shall indicate in the notification the reason why the request was not accepted and shall identify which elements of the submittal are incomplete or out of compliance.
5. If the request is approved, a site may begin using the new or revised content code once official notification is received from the WIPP RH-TRU Payload Engineer. Sites may not use proposed content code additions or revisions to make shipments in the RH-TRU 72-B prior to receipt of written notification from the WIPP RH-TRU Payload Engineer.
6. The WIPP RH-TRU Payload Engineer shall record all approved content code additions or revisions in the RH-TRUCON document. The current revision of the RH-TRUCON document shall be available to sites.

This page intentionally left blank.

1.6 Compliance Program

1.6.1 Transportation Certification Official

The site transportation certification official (TCO) is responsible for administratively verifying the compliance of each payload container and loaded RH-TRU 72-B package with all transportation requirements. The site TCO shall approve by signature on the transportation certification document every payload for transport.

1.6.2 U.S. Department of Energy-Carlsbad Field Office

The DOE-CBFO is responsible for the performance of compliance verification audits, which are conducted at each site prior to the first shipment and periodically thereafter to evaluate RH-TRU 72-B payload compliance. Audit activities include document review and interview of site operators on a job-function basis relative to meeting the applicable criteria. Where specific technical ability is required (e.g., chemical compatibility and isotopic inventory), technical experts are included on the audit team. DOE-CBFO will grant or deny waste transportation authorization based on objective evidence of the audit and the recommendation of the audit team's report. Compliance verification audits are not required at sites using personnel from a qualified and audited program. Compliance verification audits are not required at sites that document compliance by preparing waste-specific data package TRAMPACs that are reviewed and approved by the DOE-CBFO.

This page intentionally left blank.

1.7 Quality Assurance

The QA requirements applicable to the use of the RH-TRU 72-B packaging are defined by Title 10, Code of Federal Regulations (CFR), Part 71 (10 CFR 71), Subpart H[1]. The use and maintenance of the RH-TRU 72-B by the user are conducted under a QA program approved by the appropriate DOE field office. The compliance of a payload to be transported in the RH-TRU 72-B is determined by the user under a QA program approved by the DOE-CBFO (see Section 7.0).

[1] Title 10, Code of Federal Regulations, Part 71 (10 CFR 71), *Packaging and Transportation of Radioactive Material,* 01-01-09 Edition.

This page intentionally left blank.

2.0 CONTAINER AND PHYSICAL PROPERTIES REQUIREMENTS

2.1 Authorized Payload Container

2.1.1 Requirements

The only authorized payload container for the RH-TRU 72-B is the RH-TRU waste canister. The terms "payload container" and "RH-TRU waste canister" are interchangeable. The RH-TRU waste canister transported within the RH-TRU 72-B shall comply with the specifications in Section 2.8.

2.1.2 Methods of Compliance and Verification

Compliance shall be by one, or a combination of, the following methods:

- Visual inspection to the specifications of Section 2.8
- Administrative and procurement controls demonstrating that the canister has been procured to the specifications of Section 2.8.

In addition to meeting the specifications of Section 2.8 at the time of procurement, the integrity of the RH-TRU waste canister shall be visually inspected prior to transport to ensure that the payload container is in good and unimpaired condition (e.g., no significant rusting and is of sound structural integrity). Compliance shall be documented in accordance with site-specific procedures prior to shipment.

This page intentionally left blank.

2.2 Container/Package Weight

2.2.1 Requirements

Each payload container shall comply with the maximum gross weight limits summarized in Table 2.2-1.

Table 2.2-1 – Canister Maximum Gross Weight Limits

Canister Type	Maximum Gross Weight (Pounds)
Removable Lid	8,000
Fixed Lid	8,000
NS15 Neutron Shielded	3,100
NS30 Neutron Shielded	3,100

Each loaded RH-TRU 72-B package shall comply with the maximum gross weight limit provided in Table 2.2-2.

Table 2.2-2 – RH-TRU 72-B Maximum Gross Weight Limit

Assembly	Maximum Gross Weight (Pounds)
Loaded RH-TRU 72-B	45,000

Actual payload container weight is limited by "as-built" RH-TRU 72-B weight and U.S. Department of Transportation requirements for a loaded transport vehicle.

Payload containers shall be acceptable for transport only if the weight plus the error is less than or equal to the maximum gross weights specified in Table 2.2-1 and Table 2.2-2.

2.2.2 Methods of Compliance and Verification

Compliance shall be by one, or a combination of, the following methods:

- Measurement
- Review of records and database information, which may include knowledge of process.

The weight of each canister may be determined by weighing the loaded canister or its contents prior to loading and/or from the weight of the empty canister and from records and database information for its contents. There is no requirement to weigh the loaded payload container, although this can be used as a method of compliance. The weight and the associated error of each canister shall be recorded in the Payload Transportation Certification Document (PTCD) (see Section 6.2).

This page intentionally left blank.

2.3 Container Marking

2.3.1 Requirements

Each payload container shall be labeled with a unique container identification number.

2.3.2 Methods of Compliance and Verification

Compliance shall be by one, or a combination of, the following methods:

- Visual inspection of each payload container
- Administrative and procurement controls.

The unique container identification number/label shall be recorded in the PTCD (see Section 6.2).

This page intentionally left blank.

2.4 Filter Vents

2.4.1 Requirements

The RH-TRU canister and any inner containers shall be vented. The RH-TRU canister shall have one or more filter vents or equivalent venting mechanisms to meet the minimum specifications of Table 2.4-1 and this section. Any equivalent venting mechanisms shall meet the minimum total hydrogen diffusivity per container specified in Table 2.4-1. The release rates of hydrogen for any inner containers and other inner confinement layers shall be accounted for as described in Appendix 2.5 of the RH-TRU Payload Appendices[1].

Table 2.4-1 – Minimum Filter Vent Specifications

Container Type	Minimum Filter Vent Specifications		
	Total Flow Rate (ml/min of air, STP, at 1 inch of water)①	Efficiency (percent)	Total Hydrogen Diffusivity (m/s/mf at 25°C)②,③
Fixed Lid Canister (high diffusivity)	70	>99.5	9.34E-5
Fixed Lid Canister	70	>99.5	1.48E-5
Removable Lid Canister④	70	>99.5	1.48E-5
NS15 Neutron Shielded Canister	70	>99.5	1.48E-5
NS30 Neutron Shielded Canister	70	>99.5	1.48E-5

① Filters tested at a different pressure gradient shall have a proportional flow rate (e.g., 35 ml/min at 1 inch of water = 1 L/min at 1 psi).

② Total hydrogen diffusivity may be achieved through the use of multiple filter vents.

③ Filters exceeding these specifications may be used to decrease the resistance to hydrogen release in accordance with the logic outlined in Appendix 2.5 of the RH-TRU Payload Appendices.

④ Removable lid canisters with loosely placed lids, no gasket, and without filters shall demonstrate that the hydrogen diffusivity as a result of leakage is greater than or equal to 1.48E-5 m/s/mf at 25°C.

ml/min = Milliliter(s) per minute
m/s/mf = Moles per second per mole fraction
STP = Standard temperature and pressure

Filter vents for the RH-TRU canister shall be legibly marked to ensure both (1) identification of the supplier and (2) date of manufacture, lot number, or unique serial number.

[1] U.S. Department of Energy (DOE), *RH-TRU Payload Appendices*, current revision, U.S. Department of Energy, Carlsbad Field Office, Carlsbad, New Mexico.

The filter vent housing and element for the RH-TRU canister shall have an operating temperature range from –40 degrees Celsius (°C) to +70 °C (-40 degrees Fahrenheit [°F] to +158 °F). The filter vent threads shall be compatible with the bung in the container or shall be self-tapping.

2.4.2 Methods of Compliance and Verification

Compliance shall be by one, or a combination of, the following methods:

- Administrative and procurement controls demonstrating that filter vents have been procured to the specifications of Section 2.4.1
- Visual inspection to the specifications of Section 2.4.1
- Measurement by sampling of filter characteristics to the specifications of Section 2.4.1.

If measurement by sampling is selected as the compliance method, the test methods used to determine the compliance of filter vents or equivalent venting mechanisms with the minimum performance-based requirements specified in Table 2.4-1 and this section shall be directed by procedures under a QA program.

2.5 Residual Liquids

2.5.1 Requirements

Liquid waste is prohibited in the payload container except for residual amounts in well-drained containers. The total volume of residual liquid in the payload container shall be less than 1% (volume) of the payload container.

2.5.2 Methods of Compliance and Verification

Compliance shall be by one, or a combination of, the following methods:

- Review of records and database information, which may include knowledge of process
- Radiography
- Visual examination
- Sampling program.

This page intentionally left blank.

2.6 Sharp or Heavy Objects

2.6.1 Requirements

Sharp or heavy objects in the waste shall be blocked, braced, or suitably packaged as necessary to provide puncture protection for the payload container packaging these objects.

2.6.2 Methods of Compliance and Verification

Compliance shall be by one, or a combination of, the following methods:

- Review of records and database information, which may include knowledge of process
- Radiography
- Visual examination
- Sampling program.

This page intentionally left blank.

2.7 Sealed Containers

2.7.1 Requirements

Sealed containers that are greater than 4 liters (nominal) are prohibited except for metal containers packaging solid inorganic waste. Solid inorganic wastes packaged in metal containers do not generate any flammable gas (see Appendix 2.2 of the RH-TRU Payload Appendices[1]).

2.7.2 Methods of Compliance and Verification

Compliance shall be by one, or a combination of, the following methods:

- Review of records and database information, which may include knowledge of process
- Radiography
- Visual examination
- Sampling program.

[1] U.S. Department of Energy (DOE), *RH-TRU Payload Appendices*, current revision, U.S. Department of Energy, Carlsbad Field Office, Carlsbad, New Mexico.

This page intentionally left blank.

2.8 Specification for RH-TRU Waste Canisters

2.8.1 RH-TRU Waste Canister

The RH-TRU waste canister is authorized for transport within the RH-TRU 72-B (Figure 2.8-1). The RH-TRU 72-B will accommodate one canister. The canister may have a fixed lid or a removable lid, each with an optional through-pintle fill port and plug. Drawings for the fixed and removable lid RH-TRU waste canisters, Drawing Nos. X-106-501-SNP and X-106-502-SNP, respectively, are presented in Appendix 1.3.1, *General Arrangement Drawings*, of the RH-TRU 72-B Safety Analysis Report (SAR)[1]. The approximate dimensions of the canisters are given in Table 2.8-1.

Table 2.8-1 – Canister Dimensions

Dimension	Approximate Measurements (inches)
Overall Height	120½
Outside Diameter	26
Nominal Wall Thickness	0.25

Table 2.8-2 presents the canister construction materials. Table 2.8-3 specifies the weights associated with the canisters that are applicable to shipment within the RH-TRU 72-B. Canisters must be vented or filtered to meet the specifications of Section 2.4.

Table 2.8-2 – Canister Materials of Construction

Canister Component	Material
Body, lid, and pintle	Carbon Steel or Stainless Steel
Gasket (optional)	Butyl rubber, Neoprene rubber, Ethylene Propylene, Silicon, or equivalent

[1] U.S. Department of Energy (DOE), *RH-TRU 72-B Safety Analysis Report*, current revision, U.S. Department of Energy, Carlsbad Field Office, Carlsbad, New Mexico.

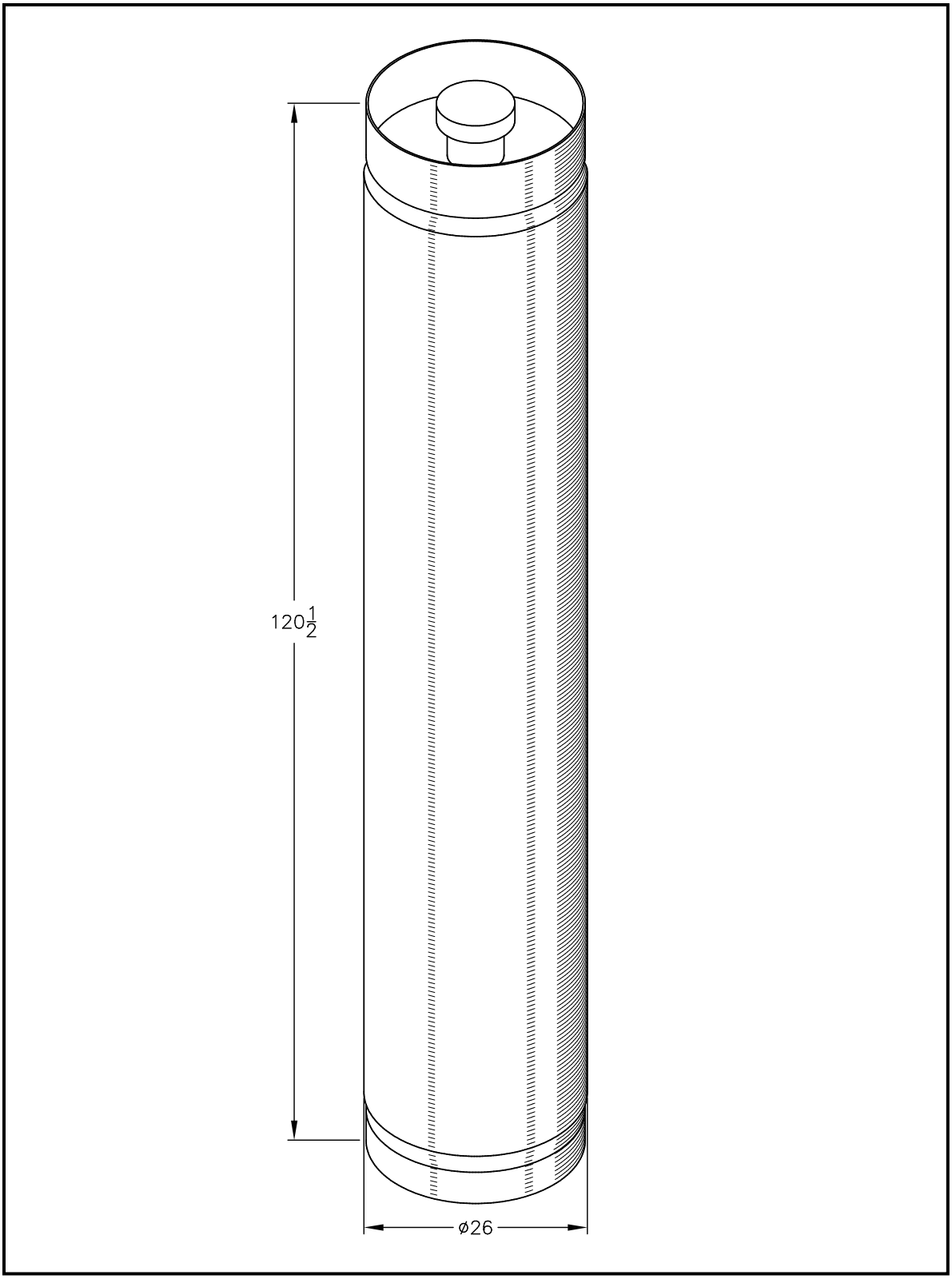

Figure 2.8-1 – RH-TRU Canister

Table 2.8-3 – Canister Weights

Canister Type	Weight (pounds)	
	Approximate Empty	Maximum Gross
Removable Lid	1,100	8.000
Fixed Lid	1,762	8,000

RH-TRU waste may be directly loaded into the canister or packaged within waste containers (e.g., three 30-gallon drums or three 55-gallon drums) in the canister. If the canister contains fewer than three 30- or 55-gallon drums, dunnage must be used inside the canister to position the drums. Table 2.8-4 identifies material content forms authorized for transport within the canister.

Table 2.8-4 – RH-TRU Waste Canister: Material Content Forms Authorized for Transport

Waste Material	Waste Material Description
1	Direct Load: Solids, any particle size (e.g., fine powder or inorganic particulates)
2	Direct Load: Solids, large particle size (e.g., sand, concrete, or debris)
3	Direct Load: Solids, large objects (e.g., metal cans containing waste)
4	Direct Load: Large, bulky dense objects with sharp and obtrusive members or components with dispersible Form 1 and 2 (e.g., steel plate, electric motors, steel pipe, or concrete blocks)①

① Blocked, braced, or suitably packaged as necessary to provide puncture protection for the RH-TRU waste canister.

2.8.2 Neutron Shielded Canister

The neutron shielded canister is a shielded version of the removable lid canister described in Section 2.8.1. The NS15 or NS30 neutron shielded canister consists of either three approximately 15-gallon steel containers or three approximately 30-gallon steel containers, respectively, positioned within a removable lid canister containing a high-density polyethylene (HDPE) shield insert (body pipe and end caps) and an optional plywood spacer (Figure 2.8-2 and Figure 2.8-3). Appendix 5.1, *Description of Neutron Shielded Canister*, of the RH-TRU Payload Appendices[1] provides a detailed description of these payload containers. The drawing for the NS15 and NS30 neutron shielded canisters, Drawing No. X-106-503-SNP, is presented in Appendix 1.3.1, *General Arrangement Drawings*, of the RH-TRU 72-B SAR[2]. The RH-TRU 72-B will accommodate one neutron shielded canister. The nominal dimensions of the neutron shielded canister shield inserts are given in Table 2.8-5.

Table 2.8-5 – Neutron Shielded Canister Shield Insert Dimensions

Dimension	Approximate Measurements (inches)
Overall height (body pipe & end caps)	112
Outside diameter (body pipe & end caps)	24
Nominal wall thickness (NS15 body pipe)	3.387
Nominal wall thickness (NS30 body pipe)	1.454
Nominal thickness (NS15 & NS30 end caps)	5

Table 2.8-6 presents the neutron shielded canister shield insert construction materials. Table 2.8-7 specifies the weights associated with the canisters that are applicable to shipment within the RH-TRU 72-B. Canisters must be vented or filtered to meet the specifications of Section 2.4.

Table 2.8-6 – Neutron Shielded Canister Shield Insert Materials of Construction

Shield Insert Component	Material
Body pipe	HDPE
End caps	HDPE
Gasket	Open-cell urethane foam
Gasket ring	Steel
Self-tapping screws	Steel

[1] U.S. Department of Energy (DOE), *RH-TRU Payload Appendices*, current revision, U.S. Department of Energy, Carlsbad Field Office, Carlsbad, New Mexico.

[2] U.S. Department of Energy (DOE), *RH-TRU 72-B Safety Analysis Report*, current revision, U.S. Department of Energy, Carlsbad Field Office, Carlsbad, New Mexico.

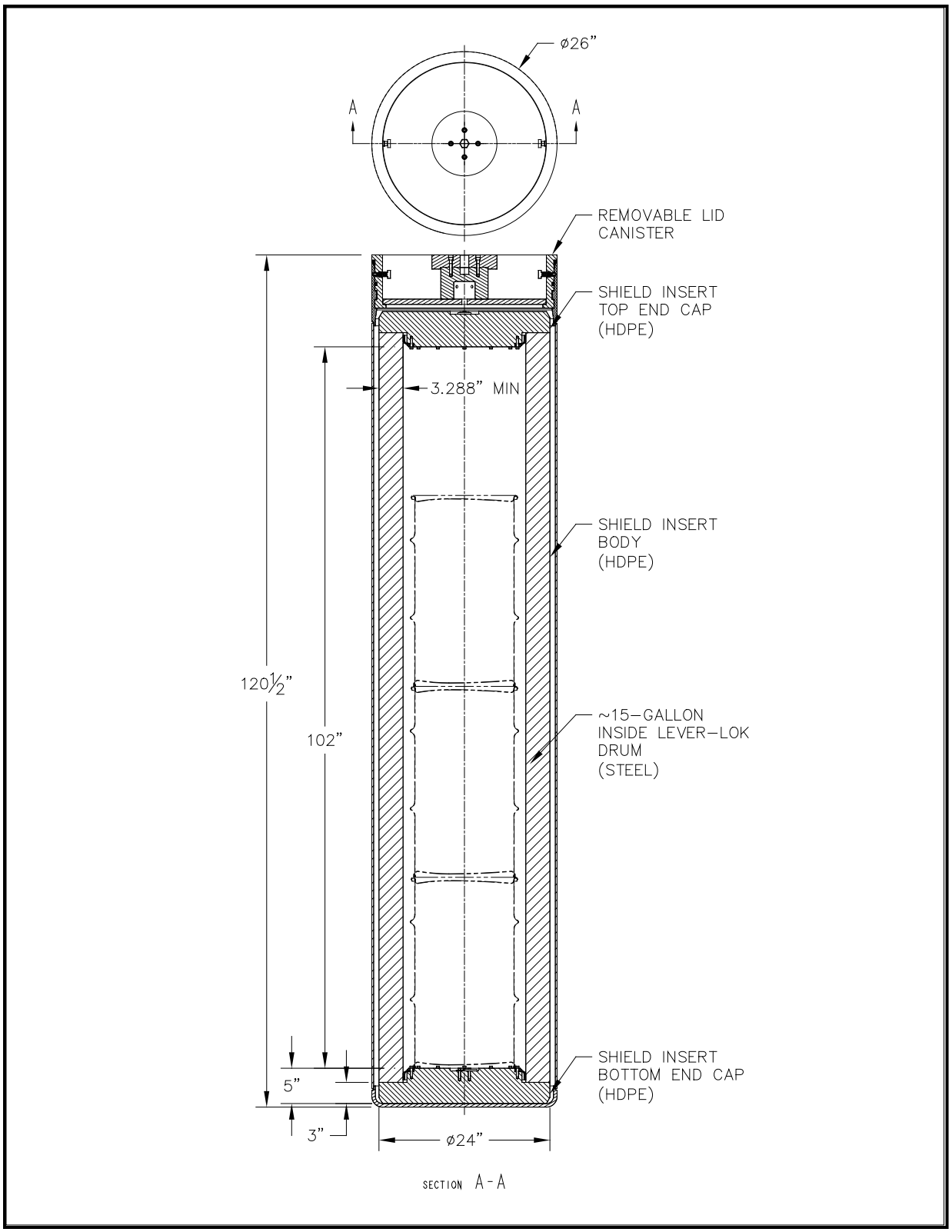

Figure 2.8-2 – NS15 Neutron Shielded Canister

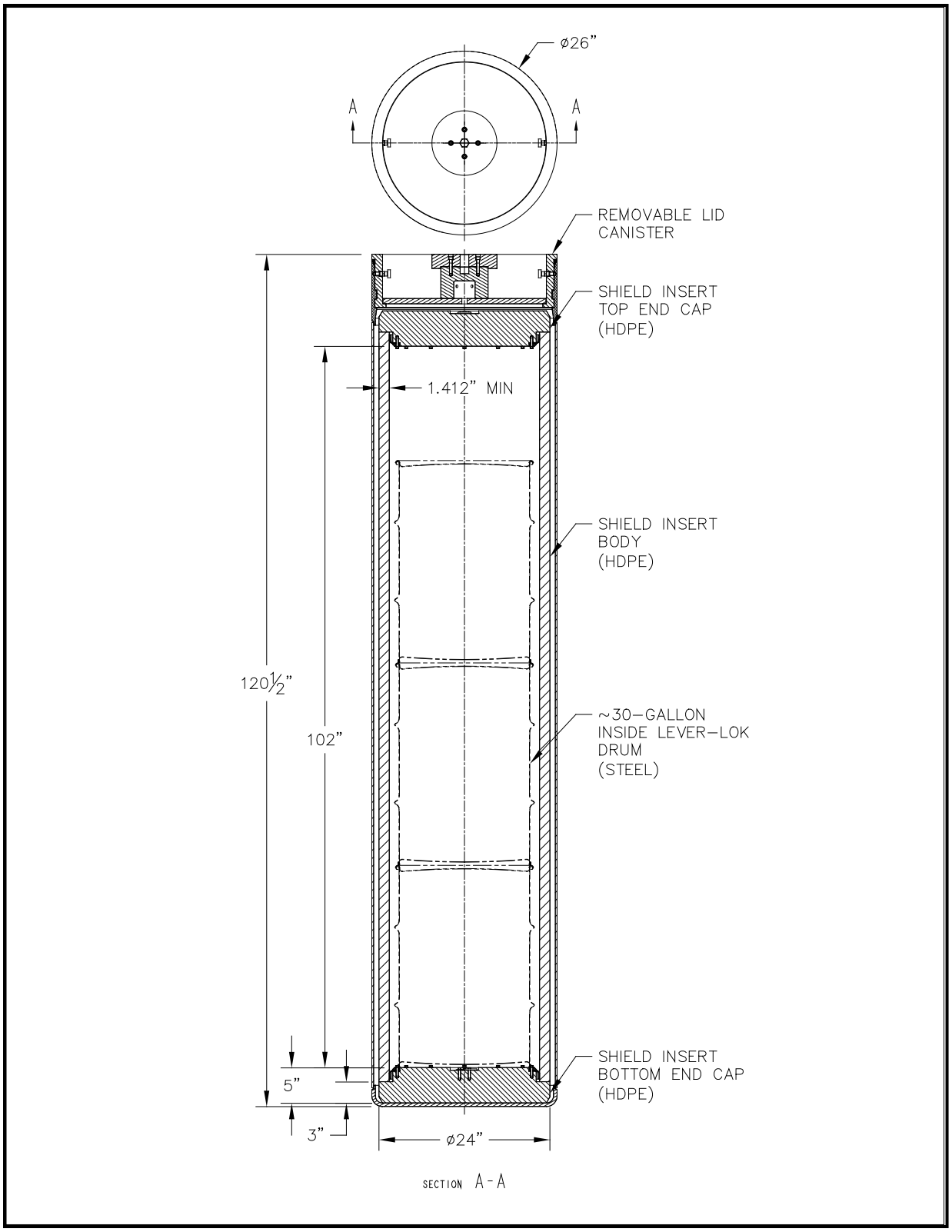

Figure 2.8-3 – NS30 Neutron Shielded Canister

Table 2.8-7 – Neutron Shielded Canister Weights

Canister Type	Weight (pounds)	
	Approximate Empty	Maximum Gross
NS15 neutron shielded canister	2,070	3,100
NS30 neutron shielded canister	1,660	3,100

RH-TRU waste must be loaded into up to three vented approximately 15- or 30-gallon drums with inside lever locks, which are then loaded into the NS15 or NS30 neutron shielded canister, respectively. If the NS15 or NS30 neutron shielded canister contains fewer than three approximately 15- or 30-gallon drums, dunnage must be used inside the canister to position the drums. Table 2.8-8 identifies material content forms authorized for transport within the neutron shielded canister.

Table 2.8-8 – Neutron Shielded Canister: Material Content Forms Authorized for Transport

Waste Material	Waste Material Description
1	Solids, any particle size (e.g., fine powder or inorganic particulates) packaged in approximately 15- or 30-gallon drums.
2	Solids, large particle size (e.g., sand, concrete, or debris) packaged in approximately 15- or 30-gallon drums.
3	Solids, large objects (e.g., metal cans containing waste) packaged in approximately 15- or 30-gallon drums.

This page intentionally left blank.

3.0 NUCLEAR PROPERTIES REQUIREMENTS

3.1 Nuclear Criticality

The nuclear properties requirements outlined in this section require a knowledge of isotopic composition and quantity of fissile material. Requirements as per 10 CFR §71.55 and §71.59[1] are summarized for the RH-TRU 72-B payload. Detailed discussions of these requirements are provided in Section 6.0 of the RH-TRU 72-B SAR[2].

3.1.1 Requirements

An RH-TRU canister is acceptable for transport only if the fissile content is less than or equal to one of the following plutonium (Pu)-239 fissile grams equivalent (FGE) or uranium (U)-235 fissile equivalent mass (FEM) limits:

Pu-239 Fissile Grams Equivalent Limits for Canisters without Neutron Shielding

No Credit for Pu-240 Poisoning

An RH-TRU canister shall be acceptable for transport only if the Pu-239 FGE plus two times the error (i.e., two standard deviations) is less than or equal to the following limits:

- 315 FGE for an RH-TRU canister, except for RH-TRU canisters containing greater than 1% by weight beryllium (Be) or beryllium oxide (BeO) or machine-compacted waste
- 305 FGE for an RH-TRU canister containing greater than 1% by weight Be or BeO that is chemically or mechanically bound to the fissile material
- 100 FGE for an RH-TRU canister containing greater than 1% by weight Be or BeO that is not chemically or mechanically bound to the fissile material
- 245 FGE for an RH-TRU canister containing machine-compacted waste
- RH-TRU canisters containing greater than 1% by weight Be or BeO and machine-compacted waste are not shippable.

Credit for Pu-240 Poisoning

- For RH-TRU canisters without machine-compacted waste containing less than or equal to 1% by weight Be or BeO, the limits in Table 3.1-1 apply. The minimum Pu-240 content for the RH-TRU canister shall be determined after the subtraction of two times the error.

[1] Title 10, Code of Federal Regulations, Part 71 (10 CFR 71), *Packaging and Transportation of Radioactive Material,* 01-01-09 Edition.

[2] U.S. Department of Energy (DOE), *RH-TRU 72-B Safety Analysis Report*, current revision, U.S. Department of Energy, Carlsbad Field Office, Carlsbad, New Mexico.

Pu-239 Fissile Grams Equivalent Limits for Canisters with Neutron Shielding

No Credit for Pu-240 Poisoning

A neutron shielded canister shall be acceptable for transport only if the Pu-239 FGE plus two times the error (i.e., two standard deviations) is less than or equal to the following limits:

- 245 FGE for a neutron shielded canister, except for neutron shielded canisters containing greater than 1% by weight Be or BeO
- Neutron shielded canisters containing greater than 1% by weight Be or BeO that is chemically or mechanically bound to the fissile material are not shippable
- Neutron shielded canisters containing greater than 1% by weight Be or BeO that is not chemically or mechanically bound to the fissile material are not shippable
- 245 FGE for a neutron shielded canister containing machine-compacted waste
- Neutron shielded canisters containing greater than 1% by weight Be or BeO and machine-compacted waste are not shippable.

Credit for Pu-240 Poisoning

- Not applicable for neutron shielded canisters.

U-235 Fissile Equivalent Mass Limit for Canisters without Neutron Shielding

- An RH-TRU canister shall be acceptable for transport if the RH-TRU canister contains material that is not machine compacted, is primarily uranium (in terms of the heavy metal component), and has the waste matrix material distributed within the canister in such a manner that the maximum enrichment of fissile radionuclides does not exceed 0.96% U-235 FEM in any location of the waste material. The U-235 FEM percentage for the RH-TRU canister shall be determined after the addition of two times the error (i.e., two standard deviations). In addition, the waste shall be a homogeneous solid/sludge generated from a process that ensures a particle size characteristic dimension of 1 inch or less.

U-235 Fissile Equivalent Mass Limit for Canisters with Neutron Shielding

- Not applicable for neutron shielded canisters.

Table 3.1-1 presents a summary of the FGE and FEM limits for the RH-TRU canister without neutron shielding and for the neutron shielded canister.

Table 3.1-1 – Summary of FGE and FEM Limits

FGE Limits with No Credit for Pu-240 Poisoning			
Contents		**Fissile Limit per RH-TRU Canister (Pu-239 FGE)**	**Fissile Limit per Neutron Shielded Canister (Pu-239 FGE)**
Not machine compacted with ≤1% by weight Be/BeO		315	245
Not machine compacted with >1% by weight Be/BeO (chemically or mechanically bound)		305	Unauthorized
Not machine compacted with >1% by weight Be/BeO (not chemically or mechanically bound)		100	Unauthorized
Machine compacted with ≤1% by weight Be/BeO		245	245
Machine compacted with >1% by weight Be/BeO		Unauthorized	Unauthorized
FGE Limits with Credit for Pu-240 Poisoning			
Contents	**Minimum Pu-240 Content in RH-TRU Canister (grams)**	**Fissile Limit per RH-TRU Canister (Pu-239 FGE)**	**Fissile Limit per Neutron Shielded Canister (Pu-239 FGE)**
Not machine compacted with ≤1% by weight Be/BeO	5	325	N/A
	15	350	N/A
	25	370	N/A
FEM Limit			
Contents		**Fissile Limit per RH-TRU Canister (weight % U-235 FEM)**	**Fissile Limit per Neutron Shielded Canister (weight % U-235 FEM)**
Not machine compacted homogenous solid/sludge with a particle size characteristic dimension of 1 inch or less that is primarily uranium (in terms of the heavy metal component) with waste matrix distributed to not exceed enrichment limit		0.96	N/A

3.1.2 Methods of Compliance and Verification

Compliance with the Pu-239 FGE or U-235 FEM limits, as applicable, involves the following steps:

- Determination of the isotopic composition
- Determination of the quantity of radionuclides
- Calculation of Pu-239 FGE or U-235 FEM, as applicable, and compliance evaluation.

Each of these steps is discussed in detail below.

Isotopic Composition

The isotopic composition of the waste may be determined from direct measurements taken on the product material during the processing or post-process certification at each site, analysis of the waste, or from existing records. The isotopic composition of the waste need not be determined by direct analysis or measurement of the waste unless process information is not available.

RH-TRU wastes from DOE sites can be divided into the following categories:

- Solid and solidified wastes from the examination of special reactor fuels, research and development activities, decontamination and cleanup, and other hot cell operations
- Contaminated metals
- Sludges processed into a solidified waste form from inorganic liquid wastes, originating from water treatment facilities, research and development activities, and decontamination operations.

These wastes can be referenced to processes requiring the knowledge of the radioisotopic composition and quantity for material accountability and tracking in support of the criticality hazard controls at each site.

Facilities that examine special reactor fuels have the most detailed and traceable data regarding the isotopic composition of the waste. Incoming radioactive materials originally generated by nuclear reactors have a well-known and documented history. The initial isotopic composition of the fuel, neutron flux, irradiation time, and cooldown time are measured and documented. From this information, the fissile material and the generation of fission and activation products can be calculated.

Mechanical subdivision of the reactor fuels for purposes of examination is required. The distribution of the isotopic inventories due to subdividing is measured and/or calculated. Generated waste items and their subdivided parts are identified and tracked by administrative systems at the sites. Items placed in the waste stream are documented with sufficient detail to permit an assignment of isotopic content. Items, such as cell equipment or decontamination materials that have been contaminated, are documented and the isotopic composition of the contamination is determined by referencing materials handled in the cell.

The isotopic composition of the irradiated fuel is calculated based on the data mentioned above, or the isotopic composition of the irradiated fuel may be confirmed by radiochemical analysis. The isotopic composition of the resulting RH-TRU waste from the examination procedures shall be determined by referencing the irradiated fuel analysis.

In most cases, facilities generating RH-TRU wastes, other than from the examination of reactor fuels, are cognizant of the isotopes present. RH-TRU wastes generated as a result of research programs utilize specific isotopes, or isotopic mixtures, and require detailed information on the isotopic composition.

For process areas handling product materials that cannot be assigned an isotopic composition by process information, the isotopic composition of the waste is determined by direct measurement or analysis of the waste materials.

Quantity of Radionuclides

The quantity of the radionuclides in each RH-TRU waste canister shall be estimated by either a direct measurement or records of the individual RH-TRU waste canister, a summation of assay results from individual packages in an RH-TRU waste canister, or a direct measurement on a representative sample of a waste stream (such as solidified inorganics). From the quantity of estimated radionuclides, the remaining quantity of associated radionuclides present in the waste can be calculated.

Examples for some acceptable methods for quantifying radionuclides in RH-TRU waste include:

- Passive Active Neutron assay
- Radiochemical assay
- Material accountability and tracking system
- Gamma dose measurements
- Waste management database information.

General requirements for determining radionuclide quantities that apply to all sites are as follows:

- Each site shall select and use the method(s) of its choice, provided the method(s) is/are approved by the DOE-CBFO under the programmatic or waste-specific data package TRAMPAC (see Section 1.4) and the prescribed controls are implemented.
- The site's waste content code descriptions shall list the specific method(s) and its/their application(s).
- Site-/equipment-specific operating and QA procedures shall describe the method(s) and the controls imposed on these methods. The controls include performing calibration and background measurements, if applicable. The calibration and background measurements shall fall within the stated acceptable ranges, as applicable, before methods are implemented. If the accountability method or database information is used, the controls on incoming materials, calculations performed, and records must be described.
- Site-/equipment-specific QA plans and procedures shall include oversight of assay and/or accountability methods and controls for determination of radionuclide quantity.
- Each site shall provide applicable training programs for methods involving fissile content and decay heat determination.

Calculation of the Pu-239 FGE or U-235 FEM and Compliance Evaluation

The ANSI/ANS-8.1[3] establishes U-233, U-235, and Pu-239 subcritical mass limits for aqueous mixtures that might not be uniform, and are independent of compound. Subcritical mass limits for other actinide isotopes are given in ANSI/ANS-8.15[4]. The bases for these limits are similar, and the same mass limit for Pu-239 is given in both standards. The ratio of these mass limits provides the basis for the Pu-239 FGE conversion factors given in Table 5.1-1.

The ANSI/ANS-8.1[3] establishes U-235 enrichment limits for uranium mixed homogeneously with water, with no limitations on mass or concentration. For uranium oxide, the limit given is 0.96 U-235 weight percent (wt%). Nitrates are shown to have a higher limit. The uranium oxide case bounds the low enriched uranium payloads. The ANSI/ANS-8.12[5] establishes subcritical concentration limits for plutonium-uranium mixtures. A homogeneous mixture of plutonium oxide mixed with natural uranium oxide is shown to have a subcritical concentration limit of 0.13 wt% Pu of unlimited mass. Since natural uranium is 0.71 wt% U-235, 0.25 wt% U-235 (i.e., 0.96-0.71=0.25 wt% U-235) is equivalent to 0.13 wt% Pu-239. This suggests that for uranium-plutonium compounds (not elemental mixtures), the U-235 FEM of Pu-239 is 1.92. Conservatively, a Pu-239 to U-235 FEM conversion factor of 2.0 is applicable to the low enriched uranium case and provides the basis for the U-235 FEM conversion factors given in Table 5.1-1.

FGE and FEM conversion factors for other fissile or fissionable isotopes, including special actinide elements, shall be obtained using the ANSI/ANS-8.1[3], -8.12[5], and -8.15[4] methods described above, or equivalent method.

FGE

The FGE of the RH-TRU waste canister without neutron shielding and the neutron shielded canister shall be calculated by summing the product of the quantity (in grams) of each radionuclide and its respective FGE conversion factor provided in Table 5.1-1. The FGE value plus two times the error (i.e., two standard deviations) shall be less than or equal to the applicable limit for the RH-TRU waste canister. If it can be demonstrated that the fissile content of the canister is below 10% of the applicable FGE limit, the FGE value shall be reported as less than 10% of the limit (e.g., if the applicable limit is 315 FGE, the FGE value may be reported as <31.5 grams). In this case, no error needs to be assigned. The Pu-239 FGE of the RH-TRU waste canister shall be recorded on the PTCD (see Section 6.2).

[3] American National Standards Institute/American Nuclear Society (ANSI/ANS), 1998, "Nuclear Criticality Safety in Operations with Fissionable Materials Outside Reactors," ANSI/ANS-8.1, American National Standards Institute/American Nuclear Society, Washington, D.C.

[4] American National Standards Institute/American Nuclear Society (ANSI/ANS), 1981, "Nuclear Criticality Control of Special Actinide Elements," ANSI/ANS-8.15, American National Standards Institute/American Nuclear Society, Washington, D.C.

[5] American National Standards Institute/American Nuclear Society (ANSI/ANS), 1987, "Nuclear Criticality Control and Safety of Plutonium-Uranium Fuel Mixtures Outside Reactors," ANSI/ANS-8.12, American National Standards Institute/American Nuclear Society, Washington, D.C.

FEM

NOTE: The U-235 FEM limit is not applicable to the neutron shielded canister.

The FEM of the RH-TRU waste canister shall be calculated by summing the product of the quantity (in grams) of each radionuclide and its respective FEM conversion factor provided in Table 5.1-1. The maximum enrichment of fissile radionuclides at any location within the RH-TRU waste canister shall be determined to be less than or equal to 0.96% U-235 FEM. The U-235 FEM percentage for the RH-TRU canister shall be determined after the addition of two times the error (i.e., two standard deviations).

The homogeneous solid/sludge waste stream process shall be documented in a programmatic or waste-specific data package TRAMPAC to include sampling and/or process knowledge data that ensure the particle size dimensional requirements are satisfied. The U-235 FEM of the canister shall be recorded on the PTCD (see Section 6.2).

This page intentionally left blank.

3.2 Radiation Dose Rates

3.2.1 Requirements

Radiation dose rates for the RH-TRU 72-B shall comply with 10 CFR 71.47(b)[1]. The external radiation dose rates of the RH-TRU 72-B shall be ≤200 milliröentgen equivalent man (mrem) per hour at the surface and ≤10 mrem/hour at 2 meters from the vertical planes projected by the outer edges of the vehicle under normal conditions of transport (NCT), as specified in Chapter 5.0 of the RH-TRU 72-B SAR[2]. In addition, with respect to any normally occupied space (i.e., the cab of the trailer shipping the RH-TRU 72-B), the radiation dose rate shall be either ≤2 mrem/hour or the personnel who are in such an occupied space shall wear radiation dosimetry devices. Under accident conditions, the external radiation dose rate of the RH-TRU 72-B shall be ≤1 röentgen equivalent man (rem) per hour any point 1 meter from the surface of the package.

Additional payload container shielding, beyond that identified in Section 2.8 as an integral component of the payload container, shall not be used to meet the above requirements. However, payload containers that meet the above radiation dose rate requirements without shielding may be shielded to levels that are as low as reasonably achievable.

3.2.2 Methods of Compliance and Verification

3.2.2.1 Compliance for Normal Conditions of Transport

Compliance with the regulatory radiation dose rate requirements for NCT shall be ensured by actual package surveys after each payload is loaded and the package (i.e., canister, inner vessel [IV], and outer cask [OC]) is assembled.

Radiation dose rates shall be obtained through measurement of all external surfaces of the package and at 2 meters from the vertical planes projected by the outer edges of the vehicle. Both gamma and neutron dose rate measurements must be performed using instruments appropriately selected and calibrated for the package contents. Dose rate survey instruments shall be maintained and calibrated at least annually in accordance with national standards (e.g., American National Standards Institute [ANSI]-N323A).

Gamma and neutron survey instruments are designed to detect these respective radiations by interaction of these radiations with a carefully selected medium. This medium may be a gas, crystal, or scintillator. For neutron measurements an additional layer of hydrogenous material (such as high-density polyethylene) may also surround the detector to allow thermalization or slowing down of the neutrons for easier detection in the selected medium. The overall design of the instrument allows relatively uniform response with minimal detector orientation effects and little energy dependence (usually less than 10% over the measured gamma energy range). For example, the WIPP site uses the Ludlum Model 17 Ion Chamber for gamma dose rate surveys and the Ludlum Model 2241-4 for neutron dose rates along with the Ludlum Model 78 or

[1] Title 10, Code of Federal Regulations, Part 71 (10 CFR 71), *Packaging and Transportation of Radioactive Material,* 01-01-09 Edition.

[2] U.S. Department of Energy (DOE), *RH-TRU 72-B Safety Analysis Report*, current revision, U.S. Department of Energy, Carlsbad Field Office, Carlsbad, New Mexico.

Eberline 6112B Teletector for gamma dose rates that are hard to reach on a RH TRU 72-B with a Model 17.

Site practices associated with performance of the dose rate surveys for the RH TRU 72-B are the same as those used to perform radiological surveys for other radioactive U.S. Department of Transportation shipments in accordance with 49 CFR 173 and applicable national standards. For example, ANSI-N323A Radiation Protection Instrumentation Test and Calibration, Portable Survey Instruments, provides comprehensive guidance for implementing a portable radiation monitoring instrument calibration program.

Instrument calibrations are performed before first use, following any major maintenance or modifications that could affect calibration, and after any failure of a source response test. Instrument response checks are performed daily.

Site-specific procedures shall govern the measurement of dose rates with the following steps completed by the Transportation Certification Official or designee:

Surface Dose Rate Surveys

3.2.2.1.1 Ensure that all instruments used to perform the surveys are calibrated, response checked, and in proper working order.

3.2.2.1.2 Perform gamma and neutron dose rate surveys by scanning all external surfaces of the package (front, back, top, bottom, driver side, and passenger side, as shown in Figure 3.2-1). Surface dose rate surveys shall be performed by slowly moving the probe at a rate compatible with the detector response capability (e.g., 1 to 2 inches per second) over the package surfaces. Record highest individual survey results for each surface on the Dose Rate Survey Form shown in Table 3.2-1. For each surface, sum the two values to determine and record the total dose rate on Table 3.2-1. Table 3.2-1 may be reformatted for site use provided that equivalent information is recorded.

3.2.2.1.3 Review the total dose rates recorded in Step 3.2.2.1.2 to determine the highest total dose rate and record on Table 3.2-1.

3.2.2.1.4 Determine and document compliance with the ≤200 mrem/hr limit at the surface of the package on Table 3.2-1.

Two-Meter Dose Rate Surveys

3.2.2.1.5 Ensure that all instruments used to perform the surveys are calibrated, response checked, and in proper working order.

3.2.2.1.6 Perform gamma and neutron dose rate surveys by scanning at 2 meters from the vertical planes projected by the outer edges of the vehicle (front, back, driver side, and passenger side, as shown in Figure 3.2-1). Two-meter dose rate surveys shall be performed by slowly moving the probe at a rate compatible with the detector response capability (e.g., 1 to 2 inches per second) over the 2-meter surfaces. Note: For operational convenience, the 2-meter dose rate measurements can be taken at locations closer to the package than the planes shown in Figure 3.2-1. Record highest individual survey results for each 2-meter surface on the Dose Rate Survey Form

shown in Table 3.2-1. For each 2-meter surface, sum the two values to determine and record the total dose rate on Table 3.2-1. Table 3.2-1 may be reformatted for site use provided that equivalent information is recorded.

3.2.2.1.7 Review the total dose rates recorded in Step 3.2.2.1.6 to determine the highest total dose rate and record on Table 3.2-1.

3.2.2.1.8 Determine and document compliance with the ≤10 mrem/hr limit at 2 meters from the vertical planes projected by the outer edges of the vehicle on Table 3.2-1.

Normally Occupied Space Surveys

Using site-specific procedures either (1) perform gamma and neutron dose rate surveys by scanning the normally occupied space and determine compliance with the ≤2 mrem/hr limit, or (2) ensure that the personnel who are in such an occupied space wear radiation dosimetry devices.

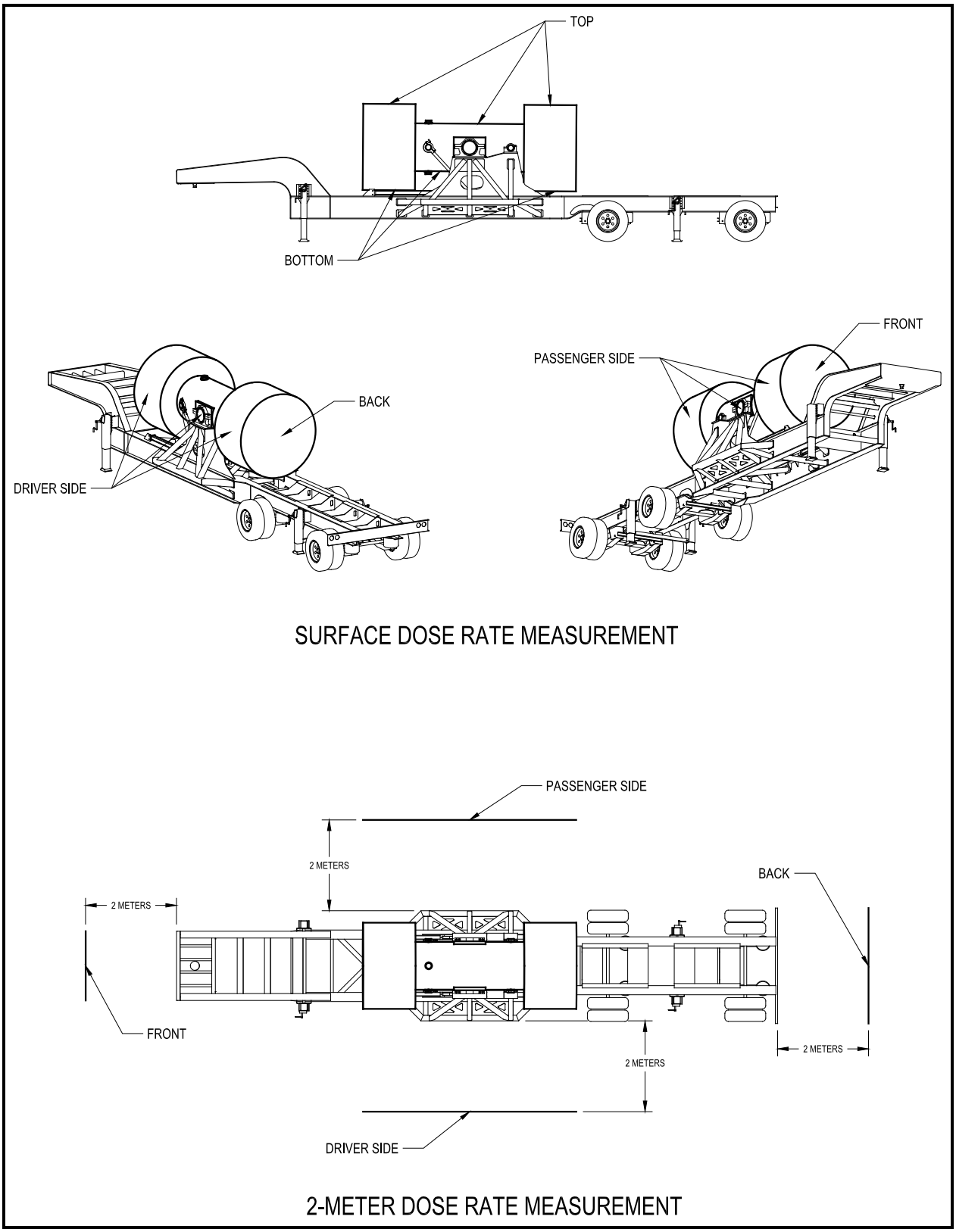

Figure 3.2-1 – Dose Rate Measurement Locations

Table 3.2-1 – Dose Rate Survey Form

Shipment No. _____ Packaging No. _____

To be completed by Site Transportation Certification Officer, or designee, for each package:

RH-TRAMPAC Section No.	Activity					
3.2.2.1.2 and 3.2.2.1.6	Record highest individual survey results from gamma and neutron dose rate surveys (see Figure 3.2-1). Sum the two recorded values to determine and record the total dose rates.					
Highest Individual Dose Rate Measurement	**Gamma (mrem/hr)**		**Neutron (mrem/hr)**		**Total (mrem/hr)**	
	Surface	**2-Meter (from plane)**	**Surface**	**2-Meter (from plane)**	**Surface**	**2-Meter (from plane)**
Front						
Back						
Driver Side						
Passenger Side						
Top		NA		NA		NA
Bottom		NA		NA		NA

RH-TRAMPAC Section No.	Activity	
3.2.2.1.3 and 3.2.2.1.7	Select the highest total dose rates (from values calculated in Steps 3.2.2.1.2 and 3.2.2.1.6) and record below.	
3.2.2.1.4 and 3.2.2.1.8	Determine compliance with the dose rate limits of ≤200 mrem/hr on the external surface of the package and ≤10 mrem/hr at any point 2 meters from the vertical planes projected by the outer edges of the vehicle.	
Highest Total Dose Rate Measurement	**Total (mrem/hr)**	**Limit (mrem/hr)**
Surface		≤200
2-Meter (from plane)		≤10
I certify that the above data meets the dose rate requirements specified in Section 3.2 of the RH-TRAMPAC. _____ / _____ TRANSPORTATION CERTIFICATION OFFICIAL DATE (OR DESIGNEE)		

*This table may be reformatted for site use provided that equivalent information is recorded.

3.2.2.2 Compliance for Hypothetical Accident Conditions

Compliance with the hypothetical accident condition (HAC) dose rate requirements shall be met using one of the following two cases, as applicable:

- General payload case
- Controlled self-shielding payload case.

Compliance Under the General Payload Case

The general payload case bounds any authorized contents, regardless of form or configuration. Under this case, compliance with the regulatory dose rate requirements for HAC shall be ensured through compliance with the limits on quantity of each radionuclide. Chapter 5.0 of the RH-TRU 72-B SAR[2] presents a conservative shielding evaluation for HAC and establishes a limiting quantity for each radionuclide such that dose rates are at the HAC regulatory limit (1 rem/hour at 1 meter). For any radionuclide being transported in the RH-TRU 72-B, the quantity allowed (i.e., curies) is based on satisfying the HAC dose rate, which conservatively assumes worst-case shielding damage. These limits are shown in Table 3.2-2 for canisters without neutron shielding and Table 3.2-3 for neutron shielded canisters. All radionuclides that do not have gamma energies and do not undergo spontaneous fission or whose maximum allowable activity is calculated to be greater than 1 x 10^8 curies are classified as "unlimited." The source activity limits for gamma and neutron isotopes not listed in Table 3.2-2 or Table 3.2-3 or neutron isotopes not bounded by the assumed UO_2 source matrix shall be determined by following the procedures given in Appendix 5.5.3, *Screening Method for Neutron Emitting Isotopes*, and Appendix 5.5.4, *Screening Method for Gamma Emitting Isotopes*, of the RH-TRU 72-B SAR[2]. As shown in Chapter 5.0 of the RH-TRU 72-B SAR[2], the method of summing "partial fractions" shall be utilized to determine pre-shipment acceptability for any combination of the radionuclides being shipped. For the RH-TRU 72-B, the sum of the partial fractions for any combination of the radionuclides must be less than or equal to unity, or

$$\sum_{i=1}^{n} \frac{a_i}{A_{GN_i}} \leq 1$$

where, for a particular payload mix, a_i is the actual curie content of isotope "i" and A_{GNi} is the limiting curie content of radionuclide "i" given in Table 3.2-2 or Table 3.2-3 or calculated from the methodologies outlined in Appendix 5.5.3 or Appendix 5.5.4 of the RH-TRU 72-B SAR[2].

For example, using Table 3.2-2, 36.43 curies of ^{60}Co, 557.4 curies of ^{95}Zr, and 1,060 curies of ^{242}Pu each result in a limiting HAC dose rate of 1 rem per hour at a distance of 1 meter from the package surface. The sum of the partial fractions for a payload containing 20.0 curies of ^{60}Co, 38.0 curies of ^{95}Zr, and 155 curies of ^{242}Pu is:

$$\frac{a_{60_{Co}}}{A_{GN_{60_{Co}}}} + \frac{a_{95_{Zr}}}{A_{GN_{95_{Zr}}}} + \frac{a_{242_{Pu}}}{A_{GN_{242_{Pu}}}} = \frac{20.0}{36.43} + \frac{38.0}{557.4} + \frac{155}{1{,}060} = 0.55 + 0.07 + 0.15 = 0.77 \leq 1.00$$

Thus, the combination of isotopes for the above example will not exceed the HAC limiting dose rate of 1 rem per hour at a distance of 1 meter from the package surface.

Additionally, the sum of dose rate partial fractions must be less than 0.1 to limit the dose contribution from isotopes where activity limits were calculated by the procedures outlined in Appendix 5.5.3 and/or Appendix 5.5.4 of the RH-TRU 72-B SAR[2] to 10% of the total, or:

$$\sum_{i=1}^{n} \frac{a_i}{A_{GN_i}} \leq 0.1$$

where, for a particular payload mix, a_i is the actual curie content of isotope "i" and A_{GNi} is the limiting curie content of radionuclide "i" calculated from the methodologies outlined in Appendix 5.5.3 or Appendix 5.5.4 of the RH-TRU 72-B SAR[2].

Compliance Under the Controlled Self-Shielding Payload Case

NOTE: The controlled self-shielding payload case is not applicable to the neutron shielded canister.

The controlled self-shielding payload case applies to wastes that are constrained in terms of payload form and configuration. Sites choosing to comply with the HAC limits using this case must meet one of the following requirements:

- The payload shall be a homogeneous solid/sludge generated from a waste stream process that ensures a particle size characteristic dimension of 1 inch or less in size. The homogeneous solid/sludge waste stream process shall be documented in the programmatic or waste-specific data package TRAMPAC to include sampling and/or process knowledge data that ensure the particle size dimension requirements are satisfied.
- The payload shall be composed of pucks, or equal, that are compacted with a minimum 20,000-pound compressive force. Each puck shall be dimensionally stable such that its form is retained once compacted. When multiple compacted pucks are used to make up a canister payload, the pucks shall be close fitting and loaded to fill greater than 90% of the canister internal volume. The compacted puck waste stream process shall be documented in the site compliance documents to include compaction and loading procedures that ensure the compaction and canister fill requirements are satisfied.

Under this case, the HAC dose rate limits are satisfied by meeting the NCT dose rate limits at the time of shipment, as demonstrated in Chapter 5.0 of the RH-TRU 72-B SAR[2]. Additionally, HAC dose rate compliance through NCT surveys is supplemented by limiting the quantity of each radionuclide to 15 times the values calculated for the General Payload Case. As shown in Chapter 5.0 of the RH-TRU 72-B SAR[2], the method of summing "partial fractions" should be appropriately utilized to determine preshipment acceptability for any combination of the radionuclides being shipped. For the RH-TRU 72-B, the sum of the partial fractions for any combination of the radionuclides must be less than or equal to unity, or

$$\sum_{i=1}^{n} \frac{a_i}{15x A_{GN_i}} \leq 1$$

where, for a particular payload mix, a_i is the actual curie content of isotope "i" and A_{GNi} is the limiting curie content of radionuclide "i" given in Table 3.2-2 or calculated from the methodologies outlined in Appendix 5.5.3 or Appendix 5.5.4 of the RH-TRU 72-B SAR[2].

Additionally, the sum of dose rate partial fractions must be less than 0.1 to limit the dose contribution from isotopes where activity limits were calculated by the procedures outlined in Appendix 5.5.3 and/or Appendix 5.5.4 of the RH-TRU 72-B SAR[2] to 10% of the total, or:

$$\sum_{i=1}^{n} \frac{a_i}{15xA_{GN_i}} \leq 0.1$$

where, for a particular payload mix, a_i is the actual curie content of isotope "i" and A_{GNi} is the limiting curie content of radionuclide "i" calculated from the methodologies outlined in Appendix 5.5.3 or Appendix 5.5.4 of the RH-TRU 72-B SAR[2].

Table 3.2-2 – Summary of Hypothetical Accident Condition Curie Limits for Each Radionuclide for Canisters without Neutron Shielding

Radionuclide Name	Gamma Emitter	Neutron Emitter	HAC @ 1 m Maximum Allowable Activity (Ci)	Radionuclide Name	Gamma Emitter	Neutron Emitter	HAC @ 1 m Maximum Allowable Activity (Ci)
^{3}H			unlimited	^{90}Zr			unlimited
^{10}Be			unlimited	^{90m}Zr			unlimited
^{14}C			unlimited	^{93}Zr	X		unlimited
^{22}Na	X		7.040E+01	^{95}Zr	X		5.574E+02
^{32}P			unlimited	^{93m}Nb	X		unlimited
^{33}P			unlimited	^{94}Nb	X		1.887E+02
^{35}S			unlimited	^{95}Nb	X		4.578E+02
^{45}Ca	X		unlimited	^{95m}Nb	X		1.520E+06
^{46}Sc	X		7.058E+01	^{99}Tc	X		unlimited
^{49}V			unlimited	^{99m}Tc	X		unlimited
^{51}Cr	X		unlimited	^{103}Ru	X		7.161E+03
^{54}Mn	X		2.938E+02	^{106}Ru			unlimited
^{55}Fe			unlimited	^{103m}Rh	X		unlimited
^{59}Fe	X		8.578E+01	^{106}Rh	X		2.180E+03
^{57}Co	X		5.245E+05	^{107}Pd			unlimited
^{58}Co	X		3.122E+02	^{108}Ag	X		5.931E+04
^{60}Co	X		3.643E+01	^{108m}Ag	X		5.064E+02
^{59}Ni			unlimited	^{109m}Ag	X		unlimited
^{63}Ni			unlimited	^{110}Ag	X		1.971E+04
^{64}Cu	X		1.255E+04	^{110m}Ag	X		6.301E+01
^{65}Zn	X		2.044E+02	^{109}Cd	X		unlimited
^{73}As	X		unlimited	^{113m}Cd	X		unlimited
^{79}Se			unlimited	^{115m}Cd	X		3.938E+03
^{85}Kr	X		1.534E+06	^{114}In	X		4.741E+04
^{86}Rb	X		1.316E+03	^{114m}In	X		1.674E+04
^{87}Rb			unlimited	^{115m}In	X		9.296E+06
^{89}Sr	X		2.180E+06	^{119m}Sn	X		unlimited
^{90}Sr			unlimited	^{121m}Sn	X		unlimited
^{88}Y	X		2.485E+01	^{123}Sn	X		1.752E+04
^{90}Y	X		unlimited	^{126}Sn	X		unlimited
^{90m}Y	X		1.495E+04	^{124}Sb	X		5.003E+01
^{91}Y	X		3.201E+04	^{125}Sb	X		4.166E+03
^{88}Zr	X		2.204E+05	^{126}Sb	X		1.907E+02

Radionuclide Name	Gamma Emitter	Neutron Emitter	HAC @ 1 m Maximum Allowable Activity (Ci)
^{126m}Sb	X		4.589E+02
^{123}Te			unlimited
^{123m}Te	X		unlimited
^{125m}Te	X		unlimited
^{127}Te	X		8.177E+06
^{127m}Te	X		7.946E+06
^{129}Te	X		1.231E+04
^{129m}Te	X		1.695E+04
^{125}I	X		unlimited
^{129}I	X		unlimited
^{131}I	X		1.189E+04
^{134}Cs	X		2.444E+02
^{135}Cs			unlimited
^{137}Cs	X		1.268E+03
^{133}Ba	X		1.967E+06
^{137}Ba			unlimited
^{137m}Ba	X		1.198E+03
^{141}Ce	X		unlimited
^{142}Ce			unlimited
^{144}Ce	X		unlimited
^{143}Pr	X		unlimited
^{144}Pr	X		2.393E+03
^{144m}Pr	X		7.371E+04
^{146}Pm	X		9.394E+02
^{147}Pm	X		unlimited
^{148}Pm	X		1.760E+02
^{148m}Pm	X		2.576E+02
^{146}Sm			unlimited
^{147}Sm			unlimited
^{151}Sm	X		unlimited
^{150}Eu	X		2.750E+02
^{152}Eu	X		1.149E+02
^{154}Eu	X		1.108E+02

Radionuclide Name	Gamma Emitter	Neutron Emitter	HAC @ 1 m Maximum Allowable Activity (Ci)
^{155}Eu	X		unlimited
^{152}Gd			unlimited
^{153}Gd	X		unlimited
^{160}Tb	X		1.379E+02
^{166m}Ho	X		2.564E+02
^{168}Tm	X		3.067E+02
^{182}Ta	X		8.964E+01
^{198}Au	X		3.074E+04
^{207}Tl	X		8.436E+04
^{208}Tl	X		1.617E+01
^{209}Tl	X		3.819E+01
^{209}Pb			unlimited
^{210}Pb	X		unlimited
^{211}Pb	X		6.387E+03
^{212}Pb	X		6.065E+07
^{214}Pb	X		1.967E+04
^{207}Bi	X		1.112E+02
^{210}Bi			unlimited
^{211}Bi	X		2.446E+07
^{212}Bi	X		1.342E+03
^{213}Bi	X		1.887E+04
^{214}Bi	X		5.576E+01
^{209}Po	X		4.694E+04
^{210}Po	X		2.819E+07
^{211}Po	X		3.639E+04
^{212}Po			unlimited
^{213}Po	X		8.565E+06
^{214}Po			unlimited
^{215}Po	X		unlimited
^{216}Po	X		1.780E+07
^{218}Po			unlimited
^{211}At	X		3.290E+05
^{217}At	X		1.673E+07

Radionuclide Name	Gamma Emitter	Neutron Emitter	HAC @ 1 m Maximum Allowable Activity (Ci)
^{219}Rn	X		1.019E+06
^{220}Rn	X		3.373E+06
^{222}Rn	X		9.315E+06
^{221}Fr	X		6.687E+07
^{223}Fr	X		4.101E+04
^{223}Ra	X		7.495E+05
^{224}Ra	X		2.257E+07
^{225}Ra	X		unlimited
^{226}Ra	X		unlimited
^{228}Ra	X		unlimited
^{225}Ac	X		2.925E+06
^{227}Ac	X		unlimited
^{228}Ac	X		1.730E+02
^{227}Th	X		1.610E+06
^{228}Th	X		unlimited
^{229}Th	X		unlimited
^{230}Th	X	X	1.000E+06
^{231}Th	X		unlimited
^{232}Th	X	X	2.090E+06
^{234}Th	X		unlimited
^{231}Pa	X	X	7.288E+05
^{233}Pa	X		3.117E+06
^{234}Pa	X		1.370E+02
^{234m}Pa	X		8.465E+03
^{232}U	X	X	6.389E+05
^{233}U	X	X	8.720E+05
^{234}U	X	X	8.909E+05
^{235}U	X	X	9.472E+05
^{236}U	X	X	9.680E+05
^{237}U	X		unlimited
^{238}U	X	X	1.180E+04
^{239}U	X		3.108E+04

Radionuclide Name	Gamma Emitter	Neutron Emitter	HAC @ 1 m Maximum Allowable Activity (Ci)
^{240}U	X		unlimited
^{237}Np	X	X	9.030E+05
^{238}Np	X		2.211E+02
^{239}Np	X		4.986E+07
^{240}Np	X		2.510E+02
^{240m}Np	X		8.149E+02
^{236}Pu	X	X	4.325E+05
^{238}Pu	X	X	4.638E+05
^{239}Pu	X	X	7.014E+05
^{240}Pu	X	X	9.140E+04
^{241}Pu	X	X	unlimited
^{242}Pu	X	X	1.060E+03
^{243}Pu	X		6.373E+07
^{244}Pu		X	4.500E+00
^{241}Am	X	X	5.455E+05
^{242}Am	X		unlimited
^{242m}Am	X	X	2.780E+07
^{243}Am	X	X	6.199E+05
^{245}Am	X		unlimited
^{240}Cm		X	9.500E+04
^{242}Cm	X	X	6.109E+04
^{243}Cm	X	X	5.830E+04
^{244}Cm	X	X	3.410E+03
^{245}Cm	X	X	2.140E+04
^{246}Cm		X	1.480E+01
^{247}Cm	X		1.774E+05
^{248}Cm		X	4.870E-02
^{250}Cm		X	5.710E-03
^{247}Bk	X		unlimited
^{249}Bk	X	X	4.590E+06
^{250}Bk	X		1.547E+02
^{249}Cf	X	X	1.685E+05

Radionuclide Name	Gamma Emitter	Neutron Emitter	HAC @ 1 m Maximum Allowable Activity (Ci)
^{250}Cf	X	X	4.580E+00
^{251}Cf	X	X	4.580E+05
^{252}Cf	X	X	1.190E-01
^{254}Cf		X	3.640E-03

Radionuclide Name	Gamma Emitter	Neutron Emitter	HAC @ 1 m Maximum Allowable Activity (Ci)
^{252}Es	X		1.657E+03
^{253}Es	X	X	3.569E+04
^{254}Es	X	X	8.959E+04
^{254m}Es	X	X	7.165E+00

Ci = Curie(s).
HAC = Hypothetical accident conditions.
m = Meter.

Table 3.2-3 – Summary of Hypothetical Accident Condition Curie Limits for Each Radionuclide for Neutron Shielded Canisters

Radio-nuclide	Gamma Emitter	Neutron Emitter	HAC @ 1 m NS30 Maximum Allowable Activity (Ci)	HAC @ 1 m NS15 Maximum Allowable Activity (Ci)
^{3}H	–	–	unlimited	unlimited
^{10}Be	–	–	unlimited	unlimited
^{14}C	–	–	unlimited	unlimited
^{22}Na	×	–	7.410E+01	8.026E+01
^{32}P	–	–	unlimited	unlimited
^{33}P	–	–	unlimited	unlimited
^{35}S	–	–	unlimited	unlimited
^{45}Ca	×	–	unlimited	unlimited
^{46}Sc	×	–	7.429E+01	8.047E+01
^{49}V	–	–	unlimited	unlimited
^{51}Cr	–	–	unlimited	unlimited
^{54}Mn	–	–	3.093E+02	3.350E+02
^{55}Fe	–	–	unlimited	unlimited
^{59}Fe	×	–	9.029E+01	9.780E+01
^{57}Co	×	–	5.521E+05	5.980E+05
^{58}Co	×	–	3.286E+02	3.559E+02
^{60}Co	×	–	3.835E+01	4.154E+01
^{59}Ni	–	–	unlimited	unlimited
^{63}Ni	–	–	unlimited	unlimited
^{64}Cu	×	–	1.321E+04	1.431E+04
^{65}Zn	×	–	2.151E+02	2.330E+02
^{73}As	×	–	unlimited	unlimited
^{79}Se	–	–	unlimited	unlimited
^{85}Kr	×	–	1.614E+06	1.748E+06
^{86}Rb	×	–	1.385E+03	1.501E+03
^{87}Rb	–	–	unlimited	unlimited
^{89}Sr	×	–	2.295E+06	2.486E+06
^{90}Sr	–	–	unlimited	unlimited
^{88}Y	×	–	2.616E+01	2.833E+01
^{90}Y	×	–	unlimited	unlimited

Radio-nuclide	Gamma Emitter	Neutron Emitter	HAC @ 1 m NS30 Maximum Allowable Activity (Ci)	HAC @ 1 m NS15 Maximum Allowable Activity (Ci)
^{90m}Y	×	–	1.574E+04	1.705E+04
^{91}Y	×	–	3.369E+04	3.649E+04
^{88}Zr	×	–	2.320E+05	2.513E+05
^{90}Zr	–	–	unlimited	unlimited
^{90m}Zr	–	–	unlimited	unlimited
^{93}Zr	×	–	unlimited	unlimited
^{95}Zr	×	–	5.867E+02	6.355E+02
^{93m}Nb	×	–	unlimited	unlimited
^{94}Nb	×	–	1.986E+02	2.151E+02
^{95}Nb	×	–	4.819E+02	5.220E+02
^{95m}Nb	×	–	1.600E+06	1.733E+06
^{99}Tc	×	–	unlimited	unlimited
^{99m}Tc	×	–	unlimited	unlimited
^{103}Ru	×	–	7.537E+03	8.164E+03
^{106}Ru	–	–	unlimited	unlimited
^{103m}Rh	×	–	unlimited	unlimited
^{106}Rh	×	–	2.294E+03	2.485E+03
^{107}Pd	–	–	unlimited	unlimited
^{108}Ag	×	–	6.243E+04	6.762E+04
^{108m}Ag	×	–	5.330E+02	5.774E+02
^{109m}Ag	×	–	unlimited	unlimited
^{110}Ag	×	–	2.075E+04	2.247E+04
^{110m}Ag	×	–	6.633E+01	7.184E+01
^{109}Cd	×	–	unlimited	unlimited
^{113m}Cd	×	–	unlimited	unlimited
^{115m}Cd	×	–	4.145E+03	4.490E+03
^{114}In	×	–	4.990E+04	5.405E+04
^{114m}In	×	–	1.762E+04	1.908E+04
^{115m}In	×	–	9.785E+06	1.060E+07
^{119m}Sn	×	–	unlimited	unlimited

Radio-nuclide	Gamma Emitter	Neutron Emitter	HAC @ 1 m NS30 Maximum Allowable Activity (Ci)	HAC @ 1 m NS15 Maximum Allowable Activity (Ci)
^{121m}Sn	×	–	unlimited	unlimited
^{123}Sn	×	–	1.844E+04	1.998E+04
^{126}Sn	×	–	unlimited	unlimited
^{124}Sb	×	–	5.266E+01	5.704E+01
^{125}Sb	×	–	4.385E+03	4.750E+03
^{126}Sb	×	–	2.007E+02	2.174E+02
^{126m}Sb	×	–	4.830E+02	5.232E+02
^{123}Te	–	–	unlimited	unlimited
^{123m}Te	×	–	unlimited	unlimited
^{125m}Te	×	–	unlimited	unlimited
^{127}Te	×	–	8.607E+06	9.322E+06
^{127m}Te	×	–	8.364E+06	9.059E+06
^{129}Te	×	–	1.295E+04	1.403E+04
^{129m}Te	×	–	1.784E+04	1.932E+04
^{125}I	×	–	unlimited	unlimited
^{129}I	×	–	unlimited	unlimited
^{131}I	×	–	1.252E+04	1.356E+04
^{134}Cs	×	–	2.573E+02	2.786E+02
^{135}Cs	–	–	unlimited	unlimited
^{137}Cs	×	–	1.335E+03	1.446E+03
^{133}Ba	×	–	2.071E+06	2.243E+06
^{137}Ba	–	–	unlimited	unlimited
^{137m}Ba	×	–	1.260E+03	1.365E+03
^{141}Ce	×	–	unlimited	unlimited
^{142}Ce	–	–	unlimited	unlimited
^{144}Ce	×	–	unlimited	unlimited
^{143}Pr	×	–	unlimited	unlimited
^{144}Pr	×	–	2.518E+03	2.728E+03
^{144m}Pr	×	–	7.758E+04	8.403E+04
^{146}Pm	×	–	9.887E+02	1.071E+03
^{147}Pm	×	–	unlimited	unlimited
^{148}Pm	×	–	1.853E+02	2.007E+02
^{148m}Pm	×	–	2.712E+02	2.937E+02

Radio-nuclide	Gamma Emitter	Neutron Emitter	HAC @ 1 m NS30 Maximum Allowable Activity (Ci)	HAC @ 1 m NS15 Maximum Allowable Activity (Ci)
^{146}Sm	–	–	unlimited	unlimited
^{147}Sm	–	–	unlimited	unlimited
^{151}Sm	×	–	unlimited	unlimited
^{150}Eu	×	–	2.894E+02	3.135E+02
^{152}Eu	×	–	1.209E+02	1.309E+02
^{154}Eu	×	–	1.166E+02	1.263E+02
^{155}Eu	×	–	unlimited	unlimited
^{152}Gd	–	–	unlimited	unlimited
^{153}Gd	×	–	unlimited	unlimited
^{160}Tb	×	–	1.451E+02	1.572E+02
^{166m}Ho	×	–	2.699E+02	2.924E+02
^{168}Tm	×	–	3.229E+02	3.497E+02
^{182}Ta	×	–	9.435E+01	1.022E+02
^{198}Au	×	–	3.235E+04	3.504E+04
^{207}Tl	×	–	8.879E+04	9.618E+04
^{208}Tl	×	–	1.702E+01	1.843E+01
^{209}Tl	×	–	4.020E+01	4.354E+01
^{209}Pb	–	–	unlimited	unlimited
^{210}Pb	×	–	unlimited	unlimited
^{211}Pb	×	–	6.723E+03	7.282E+03
^{212}Pb	×	–	6.384E+07	6.915E+07
^{214}Pb	×	–	2.070E+04	2.242E+04
^{207}Bi	×	–	1.170E+02	1.267E+02
^{210}Bi	–	–	unlimited	unlimited
^{211}Bi	×	–	2.575E+07	2.789E+07
^{212}Bi	×	–	1.412E+03	1.529E+03
^{213}Bi	×	–	1.986E+04	2.152E+04
^{214}Bi	×	–	5.869E+01	6.357E+01
^{209}Po	×	–	4.941E+04	5.352E+04
^{210}Po	×	–	2.967E+07	3.214E+07
^{211}Po	×	–	3.830E+04	4.149E+04
^{212}Po	–	–	unlimited	unlimited
^{213}Po	×	–	9.015E+06	9.765E+06

Radio-nuclide	Gamma Emitter	Neutron Emitter	HAC @ 1 m NS30 Maximum Allowable Activity (Ci)	HAC @ 1 m NS15 Maximum Allowable Activity (Ci)
^{214}Po	–	–	unlimited	unlimited
^{215}Po	×	–	unlimited	unlimited
^{216}Po	×	–	1.874E+07	2.030E+07
^{218}Po	–	–	unlimited	unlimited
^{211}At	×	–	3.463E+05	3.751E+05
^{217}At	×	–	1.761E+07	1.908E+07
^{219}Rn	×	–	1.073E+06	1.162E+06
^{220}Rn	×	–	3.551E+06	3.846E+06
^{222}Rn	×	–	9.805E+06	1.062E+07
^{221}Fr	×	–	7.038E+07	7.623E+07
^{223}Fr	×	–	4.316E+04	4.675E+04
^{223}Ra	×	–	7.889E+05	8.545E+05
^{224}Ra	×	–	2.376E+07	2.573E+07
^{225}Ra	×	–	unlimited	unlimited
^{226}Ra	×	–	unlimited	unlimited
^{228}Ra	×	–	unlimited	unlimited
^{225}Ac	×	–	3.079E+06	3.335E+06
^{227}Ac	×	–	unlimited	unlimited
^{228}Ac	×	–	1.821E+02	1.973E+02
^{227}Th	×	–	1.695E+06	1.836E+06
^{228}Th	×	–	unlimited	unlimited
^{229}Th	×	–	unlimited	unlimited
^{230}Th	×	×	2.268E+06	6.635E+06
^{231}Th	×	–	unlimited	unlimited
^{232}Th	×	×	4.995E+06	1.577E+07
^{234}Th	×	–	unlimited	unlimited
^{231}Pa	×	×	1.526E+06	3.644E+06
^{233}Pa	×	–	3.281E+06	3.554E+06
^{234}Pa	×	–	1.442E+02	1.562E+02
^{234m}Pa	×	–	8.910E+03	9.651E+03
^{232}U	×	×	1.417E+06	3.981E+06
^{233}U	×	×	1.978E+06	5.745E+06
^{234}U	×	×	2.017E+06	5.904E+06

Radio-nuclide	Gamma Emitter	Neutron Emitter	HAC @ 1 m NS30 Maximum Allowable Activity (Ci)	HAC @ 1 m NS15 Maximum Allowable Activity (Ci)
^{235}U	×	×	2.250E+06	6.613E+06
^{236}U	×	×	2.266E+06	6.748E+06
^{237}U	×	–	unlimited	unlimited
^{238}U	×	×	3.118E+04	9.407E+04
^{239}U	×	–	3.271E+04	3.543E+04
^{240}U	×	–	unlimited	unlimited
^{237}Np	×	×	2.037E+06	5.942E+06
^{238}Np	×	–	2.327E+02	2.521E+02
^{239}Np	×	–	5.248E+07	5.684E+07
^{240}Np	×	–	2.642E+02	2.862E+02
^{240m}Np	×	–	8.578E+02	9.291E+02
^{236}Pu	×	×	9.390E+05	2.558E+06
^{238}Pu	×	×	1.027E+06	2.869E+06
^{239}Pu	×	×	1.562E+06	4.437E+06
^{240}Pu	×	×	2.247E+05	6.406E+05
^{241}Pu	×	×	unlimited	unlimited
^{242}Pu	×	×	2.609E+03	7.434E+03
^{243}Pu	×	–	6.709E+07	7.266E+07
^{244}Pu	–	×	1.161E+01	3.433E+01
^{241}Am	×	×	1.188E+06	3.260E+06
^{242}Am	×	–	unlimited	unlimited
^{242m}Am	×	×	6.559E+07	unlimited
^{243}Am	×	×	1.365E+06	3.768E+06
^{245}Am	×	–	unlimited	unlimited
^{240}Cm	–	×	2.111E+05	5.552E+05
^{242}Cm	×	×	1.431E+05	3.947E+05
^{243}Cm	×	×	1.343E+05	3.602E+05
^{244}Cm	×	×	8.250E+03	2.262E+04
^{245}Cm	×	×	4.935E+04	1.368E+05
^{246}Cm	–	×	3.579E+01	9.941E+01
^{247}Cm	×	–	1.867E+05	2.022E+05
^{248}Cm	–	×	1.209E-01	3.427E-01
^{250}Cm	–	×	1.494E-02	4.400E-02

Radio-nuclide	Gamma Emitter	Neutron Emitter	HAC @ 1 m NS30 Maximum Allowable Activity (Ci)	HAC @ 1 m NS15 Maximum Allowable Activity (Ci)
^{247}Bk	×	–	unlimited	unlimited
^{249}Bk	×	×	1.176E+07	3.436E+07
^{250}Bk	×	–	1.628E+02	1.763E+02
^{249}Cf	×	×	2.541E+05	3.614E+05
^{250}Cf	×	×	1.040E+01	2.675E+01
^{251}Cf	×	×	9.861E+05	2.684E+06
^{252}Cf	×	×	2.643E-01	6.745E-01

Radio-nuclide	Gamma Emitter	Neutron Emitter	HAC @ 1 m NS30 Maximum Allowable Activity (Ci)	HAC @ 1 m NS15 Maximum Allowable Activity (Ci)
^{254}Cf	–	×	8.066E-03	2.044E-02
^{252}Es	×	–	1.744E+03	1.889E+03
^{253}Es	×	×	7.928E+04	2.022E+05
^{254}Es	×	×	1.965E+05	5.065E+05
^{254m}Es	×	×	1.594E+01	3.995E+01

Ci = Curie(s).
HAC = Hypothetical accident conditions.
m = Meter.

4.0 CHEMICAL PROPERTIES REQUIREMENTS

4.1 Pyrophoric Materials

As defined by 10 CFR §61.2:

> *A pyrophoric solid is any solid material, other than one classed as an explosive, which under normal conditions is liable to cause fires through friction, retained heat from manufacturing or processing, or which can be ignited readily and when ignited burns so vigorously and persistently as to create a serious transportation, handling, or disposal hazard. Included are spontaneously combustible and water-reactive materials.*[1]

Examples of pyrophoric radionuclides are metallic plutonium and americium. Examples of nonradioactive pyrophorics, or materials/wastes that may cause a pyrophoric-type event, are organic peroxides, sodium metal, and chlorates.

While the 1% restriction is an upper limit, the amount of radioactive material in a payload container is typically well below this limit because of fissile content and decay heat restrictions. Similarly, nonradioactive pyrophorics are reacted (or oxidized) and rendered nonreactive prior to placement in the payload container.

4.1.1 Requirements

Both radioactive and nonradioactive pyrophoric materials shall be limited to residual amounts (less than 1% by weight) in the RH-TRU waste canister.

4.1.2 Methods of Compliance and Verification

Compliance shall be by one, or a combination of, the following methods.

- Review of records and database information, which may include knowledge of process
- Administrative and procurement controls.

[1] U.S. Nuclear Regulatory Commission (NRC), "Pyrophoric definition," 10 CFR §61.2, U.S. Nuclear Regulatory Commission, Washington, D.C.

This page intentionally left blank.

4.2 Explosives, Corrosives, and Compressed Gases

As defined by 49 CFR §173.50:

> *. . . An explosive means any substance or article, including a device, which is designed to function by explosion (i.e., an extremely rapid release of gas and heat) or which, by chemical reaction within itself, is able to function in a similar manner even if not designed to function by explosion, unless the substance or article is otherwise classed under the provisions of [49 CFR 173, Subpart C]. The term includes a pyrotechnic substance or article, unless the substance or article is otherwise classed under the provisions of [49 CFR 173, Subpart C].* [1]

Examples of explosives are ammunition, dynamite, black powder, detonators, nitroglycerine, urea nitrate, and picric acid.

As defined by 40 CFR §261.22:

> *(a) A solid waste exhibits the characteristic of corrosivity if a representative sample of the waste has…the following propert[y]:*
>
> > *(1) It is aqueous and has a pH less than or equal to 2 or greater than or equal to 12.5.*
>
> *(b) A solid waste that exhibits the characteristic of corrosivity has the EPA Hazardous Waste Number of D002.*[2]

The physical form of the waste, and waste generating procedures at the sites, ensure that the waste is in a nonreactive form. All waste generating sites administratively control the procurement, distribution, use, and disposal of explosives. Most sites have lists of restricted materials that include explosives. Typically, the TRU waste generating and storage sites do not allow explosives in the same facility as TRU waste.

4.2.1 Requirements

Explosives, corrosives, and compressed gases (pressurized containers) are prohibited from the payload.

4.2.2 Methods of Compliance and Verification

Compliance shall be by one, or a combination of, the following methods:

- Visual examination of the waste
- Administrative and procurement controls
- Radiography

---

[1] U.S. Department of Transportation (DOT), "An Explosive; definition," Code of Federal Regulations Title 49 (49 CFR) § 173.50, U.S. Department of Transportation, Washington, D.C.

[2] U.S. Environmental Protection Agency (EPA), "Characteristic of corrosivity," 40 CFR §261.22, U.S. Environmental Protection Agency, Washington, D.C.

- Sampling program
- Review of records and database information, which may include knowledge of process.

4.3 Chemical Composition

The chemical constituents allowed in the RH-TRU 72-B payload are restricted to ensure chemical compatibility and to enable the determination of the gas generation potential (G value in molecules per 100 electron volts) of the payload. The chemicals and materials that may be present within a given payload container are documented in the chemical list for a given content code. Compliance with the list of allowable materials in Table 4.3-1 has been demonstrated for each chemical list corresponding to each content code thereby ensuring chemical compatibility for approved content codes. The chemical list for each content code is also evaluated to determine a G value for the content code in accordance with the methodology specified in Appendix 2.2 of the RH-TRU Payload Appendices[1].

4.3.1 Requirements

Chemical constituents in a payload shall conform to the list of allowable materials in Table 4.3-1. The total quantity of the trace chemicals/materials (materials that occur in the waste in quantities less than 1% [weight]) not listed in Table 4.3-1 in the payload container is restricted to less than 5% (weight).

4.3.2 Methods of Compliance and Verification

Compliance shall be by one, or a combination, of the following methods:

- Review of records and database information, which may include knowledge of process
- Administrative and procurement controls
- Sampling program.

Content codes approved by the WIPP RH-TRU Payload Engineer comply with the chemical composition requirements. Any proposed change in process technology at a generating site for a given content code must be evaluated for compliance with the list of allowable materials in Table 4.3-1. This change shall be evaluated and approved by the WIPP RH-TRU Payload Engineer for compliance with existing restrictions. All changes in the chemical characteristics of the waste shall be recorded, and the date of the new process, description of the process, and list of new chemicals submitted to the WIPP RH-TRU Payload Engineer. The WIPP RH-TRU Payload Engineer may allow transport of the waste under the approved content code if none of the restrictions is violated as a result of the change. If the WIPP RH-TRU Payload Engineer determines that the old content code is no longer valid, the waste may be assigned to a new content code for shipment. The NRC shall be notified of any change not covered by the authorized contents as defined by this document through an amendment to the RH-TRAMPAC. All changes exceeding currently authorized contents shall be submitted to the NRC for review and approval prior to incorporation into a chemical list or content code.

[1] U.S. Department of Energy (DOE), *RH-TRU Payload Appendices*, current version, U.S. Department of Energy, Carlsbad Field Office, Carlsbad, New Mexico.

Table 4.3-1 – Table of Allowable Materials for RH-TRU Waste

Absorbent polymers, organic
Absorbents/adsorbents (e.g., Celite®, diatomaceous earth, diatomite, Florco®, Oil-Dri®, perlite, vermiculite)
Acids (inorganic and organic) – Neutralized/solidified
Alcohols (e.g., butanol, ethanol, isopropanol, methanol)
Alumina cement
Aquaset® products (for aqueous solutions)
Aqueous sludges
Aqueous solutions/water
Asbestos
Ash (e.g., ash bottoms, fly ash, soot)
Asphalt
Bakelite® ②
Batteries, dry (e.g., flashlight)
Caustics – Neutralized/solidified
Cellulose (e.g., Benelex®, cotton Conwed®, paper, rags, rayon, wood)
Cellulose acetate butyrate
Cellulose propionate
Ceramics (e.g., molds and crucibles)
Chlorinated polyether
Clays (e.g., bentonite)
Concrete
Detergent, solid (e.g., emulsifiers, surfactants)
Envirostone® (no organic emulsifiers allowed)
Esters (e.g., ethyl acetate, polyethylene glycol ester)
Ethers (e.g., ethyl ether)
Fiberglass (inorganic and organic)
Filter media (inorganic and organic)
Firebrick
Glass (e.g., borosilicate glass, labware, leaded glass, Raschig rings)
Graphite (e.g., molds and crucibles)
Greases, commercial brands
Grit

Halogenated organics (e.g., bromoform; carbon tetrachloride; chlorobenzene; chloroform; 1,1-dichloroethane; 1,2-dichloroethane; 1,1-dichloroethylene; cis-1,2-dichloroethylene; methylene chloride; 1,1,2,2-tetrachloroethane; tetrachloroethylene; 1,1,1-trichloroethane; 1,1,2-trichloroethane; trichloroethylene; 1,1,2-trichloro-1,2,2-trifluoroethane)

Heel (e.g., ash heel; soot heel; firebrick heel; sand, slag, and crucible heel)

Hydrocarbons, aliphatic (e.g., cyclohexane, n-paraffin hydrocarbons)

Hydrocarbons, aromatic (e.g., benzene; ethyl benzene; toluene; 1,2,4-trimethylbenzene; 1,3,5-trimethylbenzene; xylene)

Insulation (inorganic and organic)

Ketones (e.g., acetone, methyl ethyl ketone, methyl isobutyl ketone)

Leaded rubber (e.g., gloves, aprons, sheet material)

Leather

Magnesia cement (e.g., Ramcote® cement)

Magnesium alloy

Metal hydroxides

Metal oxides (e.g., slag)

Metals (e.g., aluminum, cadmium, copper, steel, tantalum, tungsten, zinc)

Nitrates (e.g., ammonium nitrate, sodium nitrate)

Oil (e.g., petroleum, mineral)

Organophosphates (e.g., tributyl phosphate, dibutyl phosphate, monobutyl phosphite)

Paint, dry (e.g., floor/wall paint, ALARA)

Petroset® products (for aqueous solutions)

Plastics [e.g., polycarbonate, polyethylene, polymethyl methacrylate (Plexiglas®, Lucite®), polysulfone, polytetrafluoroethylene (Teflon®), polyvinyl acetate, polyvinyl chloride, polyvinylidene chloride (saran)]

Polyamides (nylon)

Polychlorotrifluoroethylene (e.g., Kel-F®)

Polyesters (e.g., Dacron®, Mylar®)

Polyethylene glycol (e.g., Carbowax®)

Polyimides

Polyphenyl methacrylate

Polypropylene (e.g., Ful-Flo® filters)

Polyurethane

Polyvinyl alcohol

Portland cement

Resins (e.g., aniline-formaldehyde, melamine-formaldehyde, organic resins, phenol-formaldehyde, phenolic resins, urea-formaldehyde)

Rubber, natural or synthetic [e.g., chlorosulfonated polyethylene (Hypalon®), ethylene-propylene rubber, EPDM, polybutadiene, polychloroprene (neoprene), polyisobutylene, polyisoprene, polystyrene, rubber hydrochloride (pliofilm®)]
Salts (e.g., calcium chloride, calcium fluoride, sodium chloride)
Sand/soil (inorganic and organic)
Trioctyl phosphine oxide
Waxes, commercial brands
Other inorganic materials

[1]Other chemicals or materials not identified in this table are allowed provided that they meet the requirements for trace constituents, as defined in Section 4.3.1. All materials in the final waste form must be inert (nonreactive), be in a nonreactive form, or have been rendered nonreactive.

[2]Bakelite is a trademark for materials that can be composed of several different polymers, including polyethylene, polypropylene, epoxy, phenolic, polystyrene, phenoxy, perylene, polysulfone, ethylene copolymers, ABS, acrylics, and vinyl resins and compounds.

4.4 Chemical Compatibility

The list of allowable materials in Table 4.3-1 restricts the chemical composition of the payload. The basis for evaluating the chemical compatibility is the U.S. Environmental Protection Agency (EPA) document, "A Method for Determining the Compatibility of Hazardous Wastes," (EPA-600/2-80-076).[1] This method provides a systematic means of analyzing the chemical compatibility for specific combinations of chemical compounds and materials. Any incompatibilities between the payload and the packaging shall be evaluated separately if not covered by the EPA method. As described in Appendix 4.1 of the RH-TRU Payload Appendices[2], the EPA method classifies individual chemical compounds into chemical groups and identifies the potential adverse reactions resulting from incompatible combinations of the groups.

4.4.1 Requirements

Chemical compatibility shall be ensured for the following conditions:

- Chemical compatibility of the waste form within the RH-TRU waste canister
- Chemical compatibility of the waste forms with the RH-TRU 72-B IV
- Chemical compatibility of the waste forms with the RH-TRU 72-B O-ring seals.

4.4.2 Methods of Compliance and Verification

Compatibility has been demonstrated for transport in the RH-TRU 72-B using the List of Allowable Materials for RH-TRU Waste (Table 4.3-1). The restrictions imposed on the chemical constituents of the content codes approved by the WIPP RH-TRU Payload Engineer ensure compliance with the compatibility requirements (see also Appendices 4.1, 4.2, 4.3, and 4.4 of the RH-TRU Payload Appendices[2]). The chemical list for each content code is formally documented in the RH-TRUCON[3].

[1] Hatayama, H.K., J.J. Chen, E.R. de Vera, R.D. Stephens, and D.L. Storm, 1980, "A Method for Determining the Compatibility of Hazardous Wastes," EPA-600/2-80-076, U.S. Environmental Protection Agency, Cincinnati, Ohio.

[2] U.S. Department of Energy (DOE), *RH-TRU Payload Appendices*, current revision, U.S. Department of Energy, Carlsbad Field Office, Carlsbad, New Mexico.

[3] U.S. Department of Energy (DOE), *Remote-Handled Transuranic Content Codes (RH-TRUCON)*, current revision, DOE/WIPP 90-045, U.S. Department of Energy, Carlsbad Field Office, Carlsbad, New Mexico.

This page intentionally left blank.

5.0 GAS GENERATION REQUIREMENTS

Gas concentrations and pressures during transport of RH-TRU wastes in an RH-TRU 72-B payload are restricted as follows:

- For any package containing water and/or organic substances that could radiolytically generate combustible gases, determination must be made by tests and measurements or by analysis of a representative package such that the following criterion is met over a period of time that is twice the expected shipment time (defined in Appendices 2.3 and 2.4 of the RH-TRU Payload Appendices[1]): The hydrogen generated must be limited to a molar quantity that would be no more than 5% by volume of the innermost layer of confinement (or equivalent limits for other inflammable gases) if present at standard temperature and pressure (i.e., no more than 0.063 gram-moles/cubic foot at 14.7 pounds per square inch absolute and 32 °F).
- The gases generated in the payload and released into the RH-TRU 72-B IV cavity shall be controlled to maintain the pressure within the IV cavity below the acceptable design pressure of 150 pounds per square inch gauge.

The design decay heat limit for the RH-TRU 72-B is as follows:

- 50 watts per canister for all payloads

Specific requirements associated with the restrictions on gas generation during transport of a payload are described in detail below.

5.1 Flammable (Gas/VOC) Concentration Limits

5.1.1 Requirements

As discussed in Appendices 4.1, 4.5, and 4.6 of the RH-TRU Payload Appendices[1], the primary mechanism for potential flammable gas generation in TRU wastes is radiolysis. TRU wastes to be transported in the RH-TRU 72-B are restricted so that no flammable mixtures can occur in any layer of confinement during shipment. While the predominant flammable gas of concern is hydrogen, the presence of flammable volatile organic compounds (VOCs) is limited along with hydrogen to ensure the absence of flammable (gas/VOC) mixtures in the RH-TRU 72-B payload.

5.1.2 Methods of Compliance and Verification

Compliance with flammable (gas/VOC) limits may be demonstrated through the evaluation of compliance with either a decay heat or FGGR limit per container specified in approved content codes. If a container meets either the applicable decay heat limit or the FGGR limit, compliance with the flammable (gas/VOC) limits is ensured. The implementation of the compliance methods for flammable (gas/VOC) concentration limits is described in Appendix 2.5 of the RH-TRU Payload Appendices[1]. The WIPP RH-TRU Payload Engineer shall use the methodology described in Appendix 2.5[1] to determine gas generation limits for all RH-TRU

[1] U.S. Department of Energy (DOE), *RH-TRU Payload Appendices*, current revision, U.S. Department of Energy, Carlsbad Field Office, Carlsbad, New Mexico.

waste shipments. The methodology described in Appendix 2.5[1] is detailed below and illustrated in Figure 5.1-1.

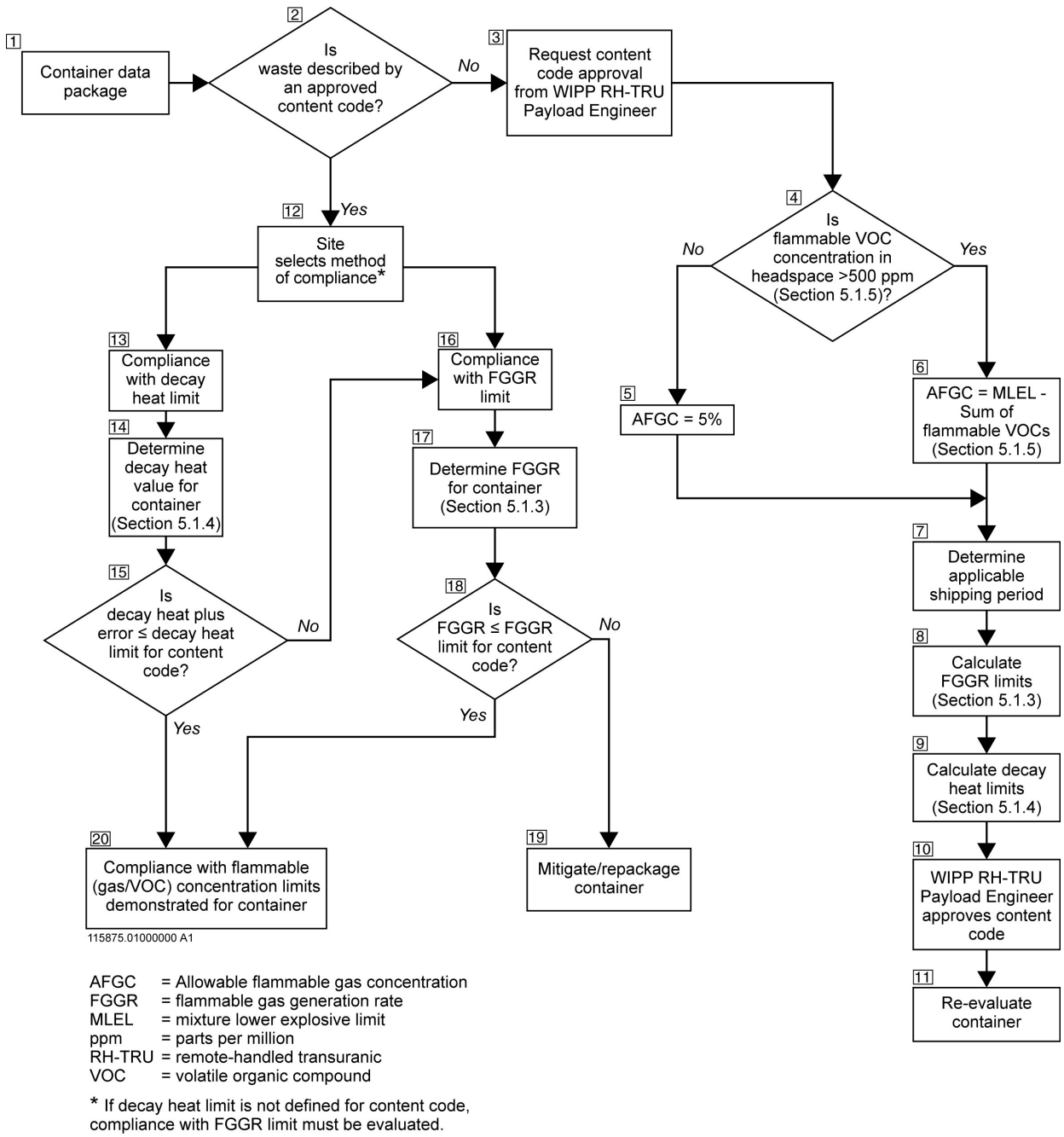

AFGC = Allowable flammable gas concentration
FGGR = flammable gas generation rate
MLEL = mixture lower explosive limit
ppm = parts per million
RH-TRU = remote-handled transuranic
VOC = volatile organic compound

* If decay heat limit is not defined for content code, compliance with FGGR limit must be evaluated.

Figure 5.1-1 – Methodology for Compliance with Flammable (Gas/VOC) Concentration Limits

Compliance with Flammable (Gas/VOC) Concentration Limits

Figure 5.1-1 presents the logic for performing the compliance evaluation for flammable (gas/VOC) concentration limits, which consists of the following steps:

Step 1, Container data package – The starting point for compliance evaluation is the container data package, which includes all data associated with the container. These data are gathered from one or more of the methods of payload compliance listed and defined in Section 1.4 (i.e., visual examination, visual inspection, radiography, records and database information, administrative and procurement controls, measurement, and sampling program).

Step 2, Is waste described by an approved content code? – Each RH-TRU canister must have a content code approved by the WIPP RH-TRU Payload Engineer to be eligible for shipment. If the container is accurately described by an approved content code, the container shall be assigned to the content code and the compliance evaluation shall proceed to **Step 12, Site selects method of compliance.** If the container is not described by an approved content code, proceed to **Step 3, Request content code approval from WIPP RH-TRU Payload Engineer**.

Step 3, Request content code approval from WIPP RH-TRU Payload Engineer – The site must request the revision or addition of a content code by submitting a request in writing to the WIPP RH-TRU Payload Engineer as described in Section 1.5. Data necessary to complete each of the required content code elements specified in Section 1.5.1 must be provided by the site as part of this request. Under the direction of the WIPP RH-TRU Payload Engineer, the request will be reviewed for completeness and satisfactory demonstration of compliance with all transportation requirements of the RH-TRAMPAC. The process of requesting content code approval proceeds to **Step 4, Is flammable VOC concentration in headspace >500 ppm?**

Step 4, Is flammable VOC concentration in headspace >500 ppm? – The concentration of flammable VOCs present in the headspace of a container may be determined as described in Section 5.1.5. If it can be determined based on available data that no flammable VOCs are present in the container, or if it can be established that the total flammable VOC concentration in the container headspace is less than or equal to 500 parts per million (ppm) (i.e., VOC contribution to flammability is expected to be negligible), proceed to **Step 5, Allowable Flammable Gas Concentration is 5%**. This is expected to be true for the majority of RH-TRU wastes based on the waste generation processes and the absence of wastes with significant quantities of VOCs (e.g., solidified organic solvents). However, if the concentration of flammable VOCs in the container cannot be established to be less than or equal to 500 ppm, proceed to **Step 6, Allowable Flammable Gas Concentration is Mixture Lower Explosive Limit minus sum of flammable VOCs**.

Step 5, Allowable Flammable Gas Concentration is 5% - For containers with flammable VOC concentrations less than or equal to 500 ppm in the headspace, the allowable flammable gas concentration (AFGC) is equal to 5% hydrogen. Proceed to **Step 7, Determine applicable shipping period**.

Step 6, Allowable Flammable Gas Concentration is Mixture Lower Explosive Limit minus sum of flammable VOCs – For containers with flammable VOC concentrations greater than 500 ppm in the headspace, the AFGC must be adjusted (reduced from 5% hydrogen) to account for the total flammable VOC concentration. As described in Section 5.1.5, a specific mixture lower explosive limit (MLEL) shall be calculated for the container. The reduced AFGC is then

calculated as the MLEL minus the sum of flammable VOCs in the container headspace. Following the calculation of the reduced AFGC, proceed to **Step 7, Determine applicable shipping period**.

Step 7, Determine applicable shipping period – The conditions specified in Appendix 2.4 of the RH-TRU Payload Appendices[1] must be met for use of the 10-day Controlled Shipment shipping period. For other shipments (not Controlled Shipments), a 60-day shipping period (Appendix 2.3 of the RH-TRU Payload Appendices[1]) shall be applied. The requirements for the use of the Controlled Shipment (10 days) shipping period shall be met by administrative and procedural controls as specified in Appendix 2.4 of the RH-TRU Payload Appendices[1] and Section 6.2.3. Following the selection of either the 10- or 60-day shipping period, proceed to **Step 8, Calculate FGGR limits**.

Step 8, Calculate FGGR limits – As described in Section 5.1.3, the FGGR limits for the content code shall be calculated. Following the calculation of the FGGR limits, proceed to **Step 9, Calculate decay heat limits**.

Step 9, Calculate decay heat limits – As described in Section 5.1.4, the decay heat limits for the content code shall be calculated. Following the calculation of the decay heat limits, proceed to **Step 10, WIPP RH-TRU Payload Engineer approves content code**.

Step 10, WIPP RH-TRU Payload Engineer approves content code – If compliance with all other transportation requirements of the RH-TRAMPAC have been demonstrated, the WIPP RH-TRU Payload Engineer shall approve the content code and send formal written notification to the site indicating the approval of the request. Upon receipt of official notification of content code approval from the WIPP RH-TRU Payload Engineer, the compliance evaluation shall proceed to **Step 11, Re-evaluate container**.

Step 11, Re-evaluate container – The container shall be re-evaluated beginning with **Step 2, Is waste described by an approved content code?**

Step 12, Site selects method of compliance – Compliance with flammable (gas/VOC) limits may be demonstrated through the evaluation of compliance with either the decay heat or FGGR limit per container specified in approved content codes. If compliance will be demonstrated by meeting the decay heat limit, the evaluation shall proceed to **Step 13, Compliance with decay heat limit**. If compliance will be demonstrated by meeting the FGGR limit, the evaluation shall proceed to **Step 16, Compliance with FGGR limit**.

Step 13, Compliance with decay heat limit – The compliance evaluation using the decay heat limit specified in the assigned content code shall proceed to **Step 14, Determine decay heat value for container**.

Step 14, Determine decay heat value for container – The site shall determine the decay heat value for the container as described in Section 5.1.4. Following the determination of the decay heat value for the container, the compliance evaluation shall proceed to **Step 15, Is decay heat plus error ≤ decay heat limit for content code?**

Step 15, Is decay heat plus error ≤ decay heat limit for content code? – Compliance with the applicable decay heat limit specified by the assigned content code is evaluated. If the container exceeds the decay heat limit, the compliance evaluation shall proceed to **Step 16, Compliance**

with FGGR limit. If the container meets the decay heat limit, the flammable (gas/VOC) limits are met and the compliance evaluation is complete (see **Step 20, Compliance with flammable (gas/VOC) concentration limits demonstrated for container**).

Step 16, Compliance with FGGR limit – The compliance evaluation using the FGGR limit specified in the assigned content code shall proceed to **Step 17, Determine FGGR for container**.

Step 17, Determine FGGR for container – The site shall determine the FGGR value for the container as described in Section 5.1.3. Following the determination of the FGGR value for the container, the compliance evaluation shall proceed to **Step 18, Is FGGR ≤ FGGR limit for content code?**

Step 18, Is FGGR ≤ FGGR limit for content code? - Compliance with the applicable FGGR limit specified by the assigned content code is evaluated. If the container exceeds the FGGR limit, the compliance evaluation shall proceed to **Step 19, Mitigate/repackage container**. If the container meets the FGGR limit, the flammable (gas/VOC) limits are met and the compliance evaluation is complete (see **Step 20, Compliance with flammable (gas/VOC) concentration limits demonstrated for container**).

Step 19, Mitigate/repackage container – If the container cannot be shown to meet the applicable decay heat limit or FGGR limit, the container is not eligible for shipment and must be segregated for repackaging, treatment, or other mitigation measures. Following the completion of mitigation measures, the compliance evaluation shall proceed to **Step 1, Container data package**.

Step 20, Compliance with flammable (gas/VOC) concentration limits demonstrated for container – All containers reaching this step meet the flammable (gas/VOC) limits and are eligible for shipment if all other transportation requirements are satisfied.

5.1.3 Flammable Gas Generation Rates

Compliance with the flammable (gas/VOC) limits can be demonstrated by meeting an FGGR limit. The 5% limit on hydrogen concentration may be converted into limits on the FGGR for each content code. FGGR limits are specified in approved content codes. If it can be shown for a given waste container that the applicable FGGR limit specified by the assigned content code can be met, the hydrogen concentration will remain below 5% under transportation conditions.

The FGGR limits for each content code are calculated using numerical solutions to differential equations that describe the unsteady-state mass balances on hydrogen within each confinement volume of the RH-TRU 72-B payload. The FGGR that will yield a hydrogen concentration of 5% volume within the innermost layer of confinement is calculated using an iterative scheme described in Appendix 2.5 of the RH-TRU Payload Appendices[1].

The determination of the FGGR limits requires the quantification of the following parameters for each content code, which are part of the data provided to the WIPP RH-TRU Payload Engineer by the site in requesting a content code:

- Waste packaging configuration (i.e., number and type of confinement layers)
- Confinement layer descriptions
- Void volume inside each confinement layer and in the RH-TRU 72-B IV outside the RH-TRU canister available for gas accumulation
- Duration of the shipping period.

The actual FGGR for a container is obtained using the methodology described in Appendix 3.1 of the RH-TRU Payload Appendices[1]. The actual FGGR is compared to the FGGR limit for the content code. An example of the derivation of the FGGR limits for a content code and the evaluation of compliance is provided in Appendix 2.5 of the RH-TRU Payload Appendices[1].

5.1.4 Decay Heat Limits

Compliance with the flammable (gas/VOC) limits can be demonstrated by meeting a decay heat limit. Because radiolysis of the TRU waste materials is the primary mechanism by which hydrogen is generated, the 5% limit on hydrogen concentration may be converted into limits on the decay heat for each content code. Decay heat limits are specified in approved content codes. If it can be shown for a given waste container that the applicable decay heat limit specified by the assigned content code can be met, the hydrogen concentration will remain below 5% under transportation conditions.

As described in Appendix 2.5 of the RH-TRU Payload Appendices[1], decay heat limits for each content code are calculated from the FGGR limits for the content code (see Section 5.1.3) and the following parameters:

- G value (gas generation potential) of the waste: Appendix 2.2 of the RH-TRU Payload Appendices[1] describes the determination of the G value based on the composition of the waste for each content code. Appendix 2.5 of the RH-TRU Payload Appendices[1] describes the use of dose-dependent G values and the methodology for evaluating compliance with the watt*year criterion of >0.012 watt*year for the use of dose-dependent G values.
- Waste density and RH-TRU canister geometry
- Isotopic composition
- Fraction of the gamma energy absorbed by waste materials that could potentially generate hydrogen.

The methodology for calculating decay heat limits uses the RadCalc program[2,3,4] (see Appendix 2.5 of the RH-TRU Payload Appendices[1]), which employs a decay algorithm to

[2] Duratek Technical Services and Josephson Engineering Services 2005, RadCalc Volume I: User's Manual, current version, Duratek Technical Services and Josephson Engineering Services, Richland, Washington (http://www.radcalc.energy.gov).

[3] Duratek 2002a, RadCalcVolume II: Technical Manual, current version, Duratek Federal Services, Inc., Northwest Operations, Richland, Washington (http://www.radcalc.energy.gov).

[4] Duratek 2002b, RadCalc Volume IV: Database Manual, current version, Duratek Federal Services, Inc., Northwest Operations, Richland, Washington (http://www.radcalc.energy.gov).

calculate the activity of a radionuclide and its associated daughter products using the ORIGEN[2,3,4] database. The RadCalc program performs decay and in-growth calculations and calculates the isotopic composition and decay heat of a container at the end of a user-specified decay time. The total activity is adjusted until the RadCalc-calculated hydrogen gas generation rate is equal to the applicable FGGR limit for the content code calculated through the methodology described in Appendix 2.5 of the RH-TRU Payload Appendices[1]. The corresponding decay heat calculated by RadCalc then defines the decay heat limit for the container.

The actual decay heat for a container is determined by calculations using the isotopic inventory information for fissile and non-fissile TRU radionuclides and for any non-TRU radionuclides that may be present in the waste. Decay heats and specific activities for many radionuclides are shown in Table 5.1-1. Acceptable methods for determining the isotopic composition and the quantity of radionuclides necessary for the calculation of decay heat values are discussed in Section 3.1. The decay heat of each radionuclide contributing more than 1% of the total decay heat of the container shall be calculated. Isotopes present in trace amounts (contributing less than 1% to the total decay heat for the container) do not need to be accounted for in the calculation of total decay heat of the container. The total quantity of these trace isotopes shall not exceed 5% by contribution of the decay heat to the total decay heat for the container.

The actual decay heat plus error (i.e., one standard deviation) is compared to the decay heat limit for the content code. If multiple decay heat values must be considered (e.g., if the RH-TRU canister contains inner containers for which individual decay heat values and associated error values are determined), the total decay heat value for the RH-TRU canister shall be determined by summing the individual decay heat values. The total decay heat error is calculated as the square root of the sum of the squares of the individual decay heat error values. An example of the derivation of the decay heat limits for a content code and the evaluation of compliance is provided in Appendix 2.5 of the RH-TRU Payload Appendices[1].

Table 5.1-1 – Pu-239 Fissile Gram Equivalent, U-235 Fissile Equivalent Mass, Decay Heat, and Specific Activity of Selected Radionuclides

NUCLIDE		SPECIFIC ATOMIC NUMBER	Pu-239 FGE①②	U-235 FEM①②③	DECAY HEAT④ (W/g)	SPECIFIC ACTIVITY⑤ (Ci/g)
H	3	1	0.00E+00	0.00E+00	3.28E-01	9.76E+03
Be	10	4	0.00E+00	0.00E+00	2.68E-05	2.24E-02
C	14	6	0.00E+00	0.00E+00	1.32E-03	4.51E+00
Na	22	11	0.00E+00	0.00E+00	8.94E+01	6.32E+03
P	32	15	0.00E+00	0.00E+00	1.19E+03	2.89E+05
P	33	15	0.00E+00	0.00E+00	2.33E+02	1.58E+05
S	35	16	0.00E+00	0.00E+00	1.23E+01	4.26E+04
Ca	45	20	0.00E+00	0.00E+00	8.12E+00	1.78E+04
Sc	46	21	0.00E+00	0.00E+00	4.25E+02	3.38E+04
V	49	23	0.00E+00	0.00E+00	2.06E-01	8.08E+03
Cr	51	24	0.00E+00	0.00E+00	1.95E+01	9.24E+04
Mn	54	25	0.00E+00	0.00E+00	3.88E+01	7.82E+03
Fe	55	26	0.00E+00	0.00E+00	8.49E-02	2.44E+03
Fe	59	26	0.00E+00	0.00E+00	3.80E+02	4.92E+04
Co	57	27	0.00E+00	0.00E+00	7.29E+00	8.55E+03
Co	58	27	0.00E+00	0.00E+00	1.91E+02	3.18E+04
Co	60	27	0.00E+00	0.00E+00	1.76E+01	1.14E+03
Ni	59	28	0.00E+00	0.00E+00	3.22E-06	8.08E-02
Ni	63	28	0.00E+00	0.00E+00	6.05E-03	5.98E+01
Cu	64	29	0.00E+00	0.00E+00	7.21E+03	3.89E+06
Zn	65	30	0.00E+00	0.00E+00	2.89E+01	8.24E+03
As	73	33	0.00E+00	0.00E+00	1.02E+01	2.25E+04
Se	79	34	0.00E+00	0.00E+00	2.18E-05	6.97E-02
Kr	85	36	0.00E+00	0.00E+00	5.94E-01	3.97E+02
Rb	86	37	0.00E+00	0.00E+00	3.71E+02	8.22E+04
Rb	87	37	0.00E+00	0.00E+00	7.32E-11	8.75E-08
Sr	89	38	0.00E+00	0.00E+00	1.01E+02	2.94E+04
Sr	90	38	0.00E+00	0.00E+00	1.60E-01	1.38E+02
Y	88	39	0.00E+00	0.00E+00	2.24E+02	1.41E+04
Y	90	39	0.00E+00	0.00E+00	3.01E+03	5.44E+05
Y	90m	39	0.00E+00	0.00E+00	4.40E+04	1.09E+07
Y	91	39	0.00E+00	0.00E+00	8.83E+01	2.45E+04
Zr	88	40	0.00E+00	0.00E+00	4.46E+01	1.80E+04
Zr	90	40	0.00E+00	0.00E+00	N/A⑥	N/A⑥
Zr	90m	40	0.00E+00	0.00E+00	2.13E+09	1.55E+11

NUCLIDE		SPECIFIC ATOMIC NUMBER	Pu-239 FGE①②	U-235 FEM①②③	DECAY HEAT④ (W/g)	SPECIFIC ACTIVITY⑤ (Ci/g)
Zr	93	40	0.00E+00	0.00E+00	7.29E-07	2.51E-03
Zr	95	40	0.00E+00	0.00E+00	1.10E+02	2.17E+04
Nb	93m	41	0.00E+00	0.00E+00	5.01E-02	2.83E+02
Nb	94	41	0.00E+00	0.00E+00	1.91E-03	1.87E-01
Nb	95	41	0.00E+00	0.00E+00	1.87E+02	3.91E+04
Nb	95m	41	0.00E+00	0.00E+00	6.11E+02	3.81E+05
Tc	99	43	0.00E+00	0.00E+00	8.49E-06	1.70E-02
Tc	99m	43	0.00E+00	0.00E+00	4.31E+03	5.27E+06
Ru	103	44	0.00E+00	0.00E+00	1.05E+02	3.26E+04
Ru	106	44	0.00E+00	0.00E+00	2.00E-01	3.38E+03
Rh	103m	45	0.00E+00	0.00E+00	7.55E+03	3.25E+07
Rh	106	45	0.00E+00	0.00E+00	6.74E+07	3.56E+09
Pd	107	46	0.00E+00	0.00E+00	2.83E-08	5.14E-04
Ag	108	47	0.00E+00	0.00E+00	2.74E+06	7.35E+08
Ag	108m	47	0.00E+00	0.00E+00	2.53E-01	2.61E+01
Ag	109m	47	0.00E+00	0.00E+00	1.32E+06	2.61E+09
Ag	110	47	0.00E+00	0.00E+00	3.01E+07	4.17E+09
Ag	110m	47	0.00E+00	0.00E+00	7.99E+01	4.80E+03
Cd	109	48	0.00E+00	0.00E+00	1.68E+00	2.61E+03
Cd	113m	48	0.00E+00	0.00E+00	2.34E-01	2.17E+02
Cd	115m	48	0.00E+00	0.00E+00	9.59E+01	2.55E+04
In	114	49	0.00E+00	0.00E+00	6.32E+06	1.38E+09
In	114m	49	0.00E+00	0.00E+00	3.23E+01	2.31E+04
In	115m	49	0.00E+00	0.00E+00	1.26E+04	6.34E+06
Sn	119m	50	0.00E+00	0.00E+00	2.38E+00	4.48E+03
Sn	121m	50	0.00E+00	0.00E+00	1.44E-02	5.91E+01
Sn	123	50	0.00E+00	0.00E+00	2.58E+01	8.22E+03
Sn	126	50	0.00E+00	0.00E+00	3.06E-05	2.84E-02
Sb	124	51	0.00E+00	0.00E+00	2.32E+02	1.75E+04
Sb	125	51	0.00E+00	0.00E+00	3.27E+00	1.04E+03
Sb	126	51	0.00E+00	0.00E+00	1.54E+03	8.36E+04
Sb	126m	51	0.00E+00	0.00E+00	1.01E+06	7.85E+07
Te	123	52	0.00E+00	0.00E+00	6.50E-17	4.85E-12
Te	123m	52	0.00E+00	0.00E+00	1.31E+01	8.87E+03
Te	125m	52	0.00E+00	0.00E+00	1.57E+01	1.80E+04
Te	127	52	0.00E+00	0.00E+00	3.59E+03	2.64E+06
Te	127m	52	0.00E+00	0.00E+00	5.21E+00	9.43E+03
Te	129	52	0.00E+00	0.00E+00	7.48E+04	2.09E+07

NUCLIDE		SPECIFIC ATOMIC NUMBER	Pu-239 FGE①②	U-235 FEM①②③	DECAY HEAT④ (W/g)	SPECIFIC ACTIVITY⑤ (Ci/g)
Te	129m	52	0.00E+00	0.00E+00	5.42E+01	3.01E+04
I	125	53	0.00E+00	0.00E+00	6.38E+00	1.76E+04
I	129	53	0.00E+00	0.00E+00	9.34E-08	1.79E-04
I	131	53	0.00E+00	0.00E+00	4.23E+02	1.25E+05
Cs	134	55	0.00E+00	0.00E+00	1.33E+01	1.31E+03
Cs	135	55	0.00E+00	0.00E+00	3.82E-07	1.15E-03
Cs	137	55	0.00E+00	0.00E+00	9.74E-02	8.80E+01
Ba	133	56	0.00E+00	0.00E+00	6.82E-01	2.53E+02
Ba	137	56	0.00E+00	0.00E+00	N/A⑥	N/A⑥
Ba	137m	56	0.00E+00	0.00E+00	2.12E+06	5.38E+08
Ce	141	58	0.00E+00	0.00E+00	4.19E+01	2.88E+04
Ce	142	58	0.00E+00	0.00E+00	0.00E+00	2.40E-08
Ce	144	58	0.00E+00	0.00E+00	2.14E+00	3.22E+03
Pr	143	59	0.00E+00	0.00E+00	1.26E+02	6.73E+04
Pr	144	59	0.00E+00	0.00E+00	5.54E+05	7.56E+07
Pr	144m	59	0.00E+00	0.00E+00	6.22E+04	1.81E+08
Pm	146	61	0.00E+00	0.00E+00	2.22E+00	4.43E+02
Pm	147	61	0.00E+00	0.00E+00	3.44E-01	9.38E+02
Pm	148	61	0.00E+00	0.00E+00	1.26E+03	1.64E+05
Pm	148m	61	0.00E+00	0.00E+00	2.73E+02	2.14E+04
Sm	146	62	0.00E+00	0.00E+00	3.47E-07	2.38E-05
Sm	147	62	0.00E+00	0.00E+00	3.04E-10	2.30E-08
Sm	151	62	0.00E+00	0.00E+00	3.10E-03	2.66E+01
Eu	150	63	0.00E+00	0.00E+00	5.95E-01	6.46E+01
Eu	152	63	0.00E+00	0.00E+00	1.35E+00	1.78E+02
Eu	154	63	0.00E+00	0.00E+00	2.39E+00	2.67E+02
Eu	155	63	0.00E+00	0.00E+00	3.42E-01	4.70E+02
Gd	152	64	0.00E+00	0.00E+00	2.77E-13	2.18E-11
Gd	153	64	0.00E+00	0.00E+00	2.96E+00	3.53E+03
Tb	160	65	0.00E+00	0.00E+00	9.24E+01	1.13E+04
Ho	166m	67	0.00E+00	0.00E+00	1.99E-02	1.80E+00
Tm	168	69	0.00E+00	0.00E+00	8.39E+01	8.44E+03
Ta	182	73	0.00E+00	0.00E+00	5.60E+01	6.31E+03
Au	198	79	0.00E+00	0.00E+00	1.51E+03	2.45E+05
Tl	207	81	0.00E+00	0.00E+00	5.58E+05	1.90E+08
Tl	208	81	0.00E+00	0.00E+00	6.93E+06	2.95E+08
Tl	209	81	0.00E+00	0.00E+00	8.58E+06	4.16E+08
Pb	209	82	0.00E+00	0.00E+00	5.32E+03	4.54E+06

NUCLIDE		SPECIFIC ATOMIC NUMBER	Pu-239 FGE①②	U-235 FEM①②③	DECAY HEAT④ (W/g)	SPECIFIC ACTIVITY⑤ (Ci/g)
Pb	210	82	0.00E+00	0.00E+00	1.96E-02	7.72E+01
Pb	211	82	0.00E+00	0.00E+00	7.61E+04	2.47E+07
Pb	212	82	0.00E+00	0.00E+00	2.64E+03	1.39E+06
Pb	214	82	0.00E+00	0.00E+00	1.49E+05	3.28E+07
Bi	207	83	0.00E+00	0.00E+00	5.34E-01	5.48E+01
Bi	210	83	0.00E+00	0.00E+00	2.86E+02	1.24E+05
Bi	211	83	0.00E+00	0.00E+00	1.64E+07	4.18E+08
Bi	212	83	0.00E+00	0.00E+00	2.42E+05	1.47E+07
Bi	213	83	0.00E+00	0.00E+00	7.64E+04	1.93E+07
Bi	214	83	0.00E+00	0.00E+00	7.25E+05	4.41E+07
Po	209	84	0.00E+00	0.00E+00	4.94E+00	1.68E+01
Po	210	84	0.00E+00	0.00E+00	1.45E+02	4.54E+03
Po	211	84	0.00E+00	0.00E+00	4.58E+09	1.04E+11
Po	212	84	0.00E+00	0.00E+00	9.24E+15	1.77E+17
Po	213	84	0.00E+00	0.00E+00	6.26E+14	1.26E+16
Po	214	84	0.00E+00	0.00E+00	1.46E+13	3.21E+14
Po	215	84	0.00E+00	0.00E+00	1.29E+12	2.95E+13
Po	216	84	0.00E+00	0.00E+00	1.40E+10	3.48E+11
Po	218	84	0.00E+00	0.00E+00	9.90E+06	2.78E+08
At	211	85	0.00E+00	0.00E+00	3.05E+04	2.06E+06
At	217	85	0.00E+00	0.00E+00	6.74E+10	1.61E+12
Rn	219	86	0.00E+00	0.00E+00	5.30E+08	1.30E+10
Rn	220	86	0.00E+00	0.00E+00	3.44E+07	9.22E+08
Rn	222	86	0.00E+00	0.00E+00	5.01E+03	1.54E+05
Fr	221	87	0.00E+00	0.00E+00	6.71E+06	1.77E+08
Fr	223	87	0.00E+00	0.00E+00	1.10E+05	3.87E+07
Ra	223	88	0.00E+00	0.00E+00	1.83E+03	5.18E+04
Ra	224	88	0.00E+00	0.00E+00	5.37E+03	1.59E+05
Ra	225	88	0.00E+00	0.00E+00	2.78E+01	3.92E+04
Ra	226	88	0.00E+00	0.00E+00	2.88E-02	1.00E+00
Ra	228	88	0.00E+00	0.00E+00	2.76E-02	2.76E+02
Ac	225	89	0.00E+00	0.00E+00	1.99E+03	5.80E+04
Ac	227	89	0.00E+00	0.00E+00	3.68E-02	7.32E+01
Ac	228	89	0.00E+00	0.00E+00	1.80E+04	2.24E+06
Th	227	90	0.00E+00	0.00E+00	1.11E+03	3.07E+04
Th	228	90	0.00E+00	0.00E+00	2.71E+01	8.29E+02
Th	229	90	0.00E+00	0.00E+00	6.17E-03	2.13E-01
Th	230	90	0.00E+00	0.00E+00	5.75E-04	2.04E-02

NUCLIDE		SPECIFIC ATOMIC NUMBER	Pu-239 FGE①②	U-235 FEM①②③	DECAY HEAT④ (W/g)	SPECIFIC ACTIVITY⑤ (Ci/g)
Th	231	90	0.00E+00	0.00E+00	6.43E+02	5.32E+05
Th	232	90	0.00E+00	0.00E+00	2.68E-09	1.11E-07
Th	234	90	0.00E+00	0.00E+00	3.45E+00	2.32E+04
Pa	231	91	0.00E+00	0.00E+00	1.46E-03	4.78E-02
Pa	233	91	0.00E+00	0.00E+00	4.90E+01	2.08E+04
Pa	234	91	0.00E+00	0.00E+00	2.40E+04	2.00E+06
Pa	234m	91	0.00E+00	0.00E+00	3.40E+06	6.87E+08
U	232	92	0.00E+00	0.00E+00	6.93E-01	2.16E+01
U	233	92	9.00E-01	1.80E+00	2.84E-04	9.76E-03
U	234	92	0.00E+00	0.00E+00	1.82E-04	6.32E-03
U	235	92	6.43E-01	1.00E+00	6.04E-08	2.19E-06
U	236	92	0.00E+00	0.00E+00	1.78E-06	6.54E-05
U	237	92	0.00E+00	0.00E+00	1.64E+02	8.25E+04
U	238	92	0.00E+00	0.00E+00	8.62E-09	3.40E-07
U	239	92	0.00E+00	0.00E+00	1.69E+05	3.35E+07
U	240	92	0.00E+00	0.00E+00	1.17E+03	9.26E+05
Np	237	93	1.50E-02	3.00E-02	2.09E-05	7.13E-04
Np	238	93	0.00E+00	0.00E+00	1.49E+03	2.59E+05
Np	239	93	0.00E+00	0.00E+00	5.87E+02	2.32E+05
Np	240	93	0.00E+00	0.00E+00	8.52E+04	1.27E+07
Np	240m	93	0.00E+00	0.00E+00	9.98E+05	1.08E+08
Pu	236	94	0.00E+00	0.00E+00	1.87E+01	5.37E+02
Pu	238	94	1.13E-01	2.25E-01	5.73E-01	1.73E+01
Pu	239	94	1.00E+00	2.00E+00	1.95E-03	6.29E-02
Pu	240	94	2.25E-02	4.50E-02	7.16E-03	2.30E-01
Pu	241	94	2.25E+00	4.50E+00	3.31E-03	1.04E+02
Pu	242	94	7.50E-03	1.50E-02	1.17E-04	3.97E-03
Pu	243	94	0.00E+00	0.00E+00	5.38E+03	2.60E+06
Pu	244	94	0.00E+00	0.00E+00	5.22E-07	1.79E-05
Am	241	95	1.87E-02	3.75E-02	1.16E-01	3.47E+00
Am	242	95	0.00E+00	0.00E+00	9.38E+02	8.08E+05
Am	242m	95	3.46E+01	6.92E+01	4.32E-03	9.83E+00
Am	243	95	1.29E-02	2.57E-02	6.49E-03	2.02E-01
Am	245	95	0.00E+00	0.00E+00	2.12E+04	6.24E+06
Cm	240	96	0.00E+00	0.00E+00	7.48E+02	2.01E+04
Cm	242	96	0.00E+00	0.00E+00	1.23E+02	3.35E+03
Cm	243	96	5.00E+00	1.00E+01	1.90E+00	5.22E+01
Cm	244	96	9.00E-02	1.80E-01	2.86E+00	8.18E+01

NUCLIDE		SPECIFIC ATOMIC NUMBER	Pu-239 FGE①②	U-235 FEM①②③	DECAY HEAT④ (W/g)	SPECIFIC ACTIVITY⑤ (Ci/g)
Cm	245	96	1.50E+01	3.00E+01	5.77E-03	1.74E-01
Cm	246	96	0.00E+00	0.00E+00	1.02E-02	3.11E-01
Cm	247	96	5.00E-01	1.00E+00	2.98E-06	9.38E-05
Cm	248	96	0.00E+00	0.00E+00	5.53E-04	4.30E-03
Cm	250	96	0.00E+00	0.00E+00	1.59E-01	2.10E-01
Bk	247	97	0.00E+00	0.00E+00	3.69E-02	1.06E+00
Bk	249	97	0.00E+00	0.00E+00	3.24E-01	1.66E+03
Bk	250	97	0.00E+00	0.00E+00	3.34E+04	3.90E+06
Cf	249	98	4.50E+01	9.00E+01	1.54E-01	4.14E+00
Cf	250	98	0.00E+00	0.00E+00	4.12E+00	1.11E+02
Cf	251	98	9.00E+01	1.80E+02	5.89E-02	1.60E+00
Cf	252	98	0.00E+00	0.00E+00	4.06E+01	5.44E+02
Cf	254	98	0.00E+00	0.00E+00	9.10E-01	8.50E+03
Es	252	99	0.00E+00	0.00E+00	4.37E+01	1.11E+03
Es	253	99	0.00E+00	0.00E+00	9.91E+02	2.52E+04
Es	254	99	0.00E+00	0.00E+00	7.35E+01	1.88E+03
Es	254m	99	0.00E+00	0.00E+00	1.69E+03	3.14E+05

①American National Standards Institute/American Nuclear Society (ANSI/ANS), 1981, "Nuclear Criticality Control of Special Actinide Elements," ANSI/ANS-8.15-1981, American National Standards Institute/American Nuclear Society, Washington, D.C.

②American National Standards Institute/American Nuclear Society (ANSI/ANS), 1998, "Nuclear Criticality Safety in Operations with Fissionable Materials Outside Reactors," ANSI/ANS-8.1-1998, American National Standards Institute/American Nuclear Society, Washington, D.C.

③American National Standards Institute/American Nuclear Society (ANSI/ANS), 1987, "Nuclear Criticality Control and Safety of Plutonium-Uranium Fuel Mixtures Outside Reactors," ANSI/ANS-8.12-1987, American National Standards Institute/American Nuclear Society, Washington, D.C.

④International Commission on Radiological Protection, 1983, "Radionuclide Transformations: Energy and Intensity of Emissions," Annals of the International Commission on Radiological Protection-38, Volumes 11-13, Pergamon Press, Oxford.

⑤Walker, F.W., Kiravac, G.J., and Rourke, F.M., 1983, Chart of the Nuclides, 13th Edition, Knolls Atomic Power Laboratories, Schenectady, NY.

⑥These isotopes are stable and thus have decay heats and specific activities of zero.

Ci/g = Curies per gram.
W/g = Watts per gram.

5.1.5 Flammable VOCs

For a given container, one of the following must be established in order to evaluate compliance with flammable (gas/VOC) limits (a list of flammable VOCs is provided in Table 5.1-2).

- No flammable VOCs are present,
- Total flammable VOC concentration in the container headspace is less than or equal to 500 ppm, or
- Estimated concentration of flammable VOCs in the container headspace if greater than 500 ppm.

Table 5.1-2 – Flammable VOCs

Acetone
Benzene
1-Butanol
Chlorobenzene
Cyclohexane
1,1-Dichloroethane
1,2-Dichloroethane
1,1-Dichloroethene
cis-1,2-Dichloroethene
Ethyl benzene
Ethyl ether
Methanol
Methyl ethyl ketone
Methyl isobutyl ketone
Toluene
1,2,4-Trimethylbenzene
1,3,5-Trimethylbenzene
Xylenes

The following methods may be used to estimate the total flammable VOC concentration in the container headspace. An upper bounding concentration of flammable VOCs may be applied to the waste using these methods:

- Establish that no flammable VOCs are present or establish the concentration of flammable VOCs in the waste (or container headspace) using records and database information. This may include taking credit for repackaging and/or segregation activities during waste generation.
- Using spot detection methods, establish the absence or the concentration of flammable VOCs (e.g., during waste generation, characterization, or packaging). Examples of spot detection methods include the use of flame ionization detectors, trace gas analyzers, and portable VOC monitors.

- Determine the concentration of potentially flammable VOCs by measuring the container headspace. Measurement of the container headspace may be performed on a statistical basis under a sampling program.

If the headspace concentration of potentially flammable VOCs is determined to be less than or equal to 500 ppm, the container is evaluated against flammable (gas/VOC) concentration limits calculated using an AFGC of 5% hydrogen.

If the concentration of potentially flammable VOCs is determined to be greater than 500 ppm in the headspace, the AFGC must be adjusted (i.e., reduced from the value of 5% volume) to account for the total concentration of flammable VOCs. The adjusted AFGC value is then used to calculate the FGGR and decay heat limits for the content code using the methodology in Appendix 2.5 of the RH-TRU Payload Appendices[1]. The methodology for calculating the adjusted AFGC value is as follows:

Calculate the MLEL within the innermost confinement layer by the flammable group method described in Appendix 3.2 of the RH-TRU Payload Appendices[1] using the following equation:

$$MLEL = \frac{100\%}{\sum (f_i \; GCF_i)}$$

where,

MLEL = Mixture lower explosive limit (volume percent)

f_i = Fraction of flammable gas i in mixture on an air-free and nonflammable VOC free basis (i.e., the concentration of flammable compound i divided by the sum of the concentrations of flammable VOCs and hydrogen)

GCF_i = Group contribution factor for compound i. The group contribution factor values for various compounds are listed in Appendix 3.2 of the RH-TRU Payload Appendices[1].

Calculate the content-code-specific AFGC as the difference between the MLEL and the sum of the flammable VOCs within the innermost confinement layer. This AFGC is used to determine FGGR and decay heat limits for the content code.

5.2 Aspiration and Venting

RH-TRU waste is, in general, packaged and stored in vented containers prior to loading for transport in the RH-TRU 72-B. If containers have been stored in an unvented condition, they shall be aspirated to ensure equilibration of any gases that may have accumulated in the closed container prior to transport.

This page intentionally left blank.

5.3 Pressure Limit

Pressure increase calculations that correspond to FGGR limits provide a bounding assessment of pressure increase values (as opposed to the extremely conservative theoretical maximum value for the NewPaper content code (solid organic material) in Table 3.4-5 of the RH-TRU 72-B SAR[1], which corresponds to the design pressure limit). The FGGR limit will be maximized if no layers of confinement exist and the void volume is maximized by assuming the waste occupies no volume.

With no barriers to gas confinement, the maximum void volume corresponds to the internal volume of the inner vessel of 1,460 liters without waste. At the time the RH-TRU 72-B cask is sealed, through the ideal gas law this volume of gas corresponds to:

$$n_T = \frac{(1\text{ atm})(1{,}460\text{ liters})}{(0.08206\text{ atm liters mole}^{-1}\text{K}^{-1})(294\text{ K})}$$

n_T = 60.52 moles of gas

To comply with 5% hydrogen limit during an assumed 60-day shipping period, the allowable flammable gas generation rate (AFGGR) in the IV with no confinement layers is calculated as:

$$\text{AFGGR} = \frac{0.05\,(60.52)\text{ mole hydrogen}}{60\text{ days }(86400\text{ sec/day})}$$

AFGGR = 5.837×10^{-7} mole/sec

Cellulose, which is the material with the highest ratio of net-to-flammable gas G value authorized for RH-TRU 72-B transport, has a net gas G value of 8.4 (molecules of hydrogen per 100 electron-volts of energy absorbed) and a dose-dependent flammable gas G value of 1.09 molecules/100 eV. Using the G value of 1.09 molecules/eV, the maximum decay heat limit corresponding to the FGGR limit of 5.837×10^{-7} mole/sec is calculated as:

$$\text{Decay heat limit} = \frac{5.837 \times 10^{-7}\text{ mole/sec}}{(1.04 \times 10^{-5}\,\frac{\text{mole}*\text{eV}}{\text{molecule}*\text{watt}*\text{sec}})(1.09\,\frac{\text{molecules}}{100\text{ eV}})}$$

Decay heat limit = 5.149 watts

Using the above AFGGR (maximum possible FGGR limit), the maximum possible "radiolytic gas generation rate" can be calculated using the following formula:

$$CG_{total} = \left(\frac{G_{eff(T)}}{G}\right) \text{x FGGR}$$

[1] U.S. Department of Energy (DOE), *RH-TRU 72-B Safety Analysis Report*, current revision, U.S. Department of Energy, Carlsbad Field Office, Carlsbad, New Mexico.

where,

CG_{total}	=	Rate of total radiolytic gas generation (moles/second)
$G_{eff(T)}$	=	Temperature-corrected effective total gas G value [the total number of molecules of gas generated per 100 eV of energy absorbed (molecules/100 eV)]
G	=	Flammable gas G value (molecules/100 eV)
FGGR	=	Flammable gas generation rate (moles/second)

The temperature-corrected effective G value can be calculated using Arrhenius equation (3) from Section 3.4.4.3 of the RH-TRU 72-B SAR[1].

$$G_{eff(T)} = G_{eff(RT)} e^{\left\{\left[\frac{E_a}{R}\right]\left[\frac{T-T_{RT}}{(T)(T_{RT})}\right]\right\}}$$

where,

$G_{eff(RT)}$	=	Effective total gas G value at room temperature (RT) [the total number of molecules of gas generated per 100 eV of energy absorbed (molecules/100 eV)]
E_a	=	Activation energy for the target material (2.1 kcal/mole)
R	=	Ideal gas constant, ($R = 1.99\times10^{-3}$ kcal/mole-K)
T	=	Absolute temperature of the target material, average contents temperature (K)
T_{RT}	=	Absolute room temperature of 25 °C (298 K).

The average contents temperature T can be calculated using the equation for paper waste in Section 2.5.4.1 of Appendix 2.5 of the RH-TRU Payload Appendices[2].

$$T = 1.08288\ Q + 123.593$$

where,

Q	=	Decay heat (watts)
T	=	Average contents temperature (°F).

Therefore, at the decay heat limit of 5.149 watts, the average contents temperature is calculated to be 129.17 °F (327.13 K). The temperature-corrected effective total gas G value at 327.13 K is thus calculated as:

$$G_{eff(T)} = \left(8.4\frac{\text{molecules}}{100\ \text{eV}}\right) e^{\left\{\left[\frac{2.1\frac{\text{kcal}}{\text{mole}}}{1.99\text{x}10^{-3}\frac{\text{kcal}}{\text{mole-K}}}\right]\left[\frac{327.13\text{K}-298\text{K}}{(327.13\text{K})\,(298\text{K})}\right]\right\}}$$

$$= \left(8.4\frac{molecules}{100\,eV}\right) e^{0.3153} = 11.5\frac{molecules}{100\,eV}$$

[2] U.S. Department of Energy (DOE), *RH-TRU Payload Appendices*, current revision, U.S. Department of Energy, Carlsbad Field Office, Carlsbad, New Mexico.

Therefore, the maximum possible total radiolytic gas generation rate (as a function of the maximum possible container FGGR limit) is calculated as:

$$CG_{total} = \left(\frac{11.5 \frac{\text{molecules}}{100\,\text{eV}}}{1.09 \frac{\text{molecules}}{100\,\text{eV}}} \right) \text{x } 5.837 \text{ x } 10^{-7} \frac{\text{mole}}{\text{sec}}$$

$$= 6.158 \text{ x } 10^{-6} \frac{\text{mole}}{\text{sec}}$$

Using this maximum total radiolytic gas generation rate, the maximum possible FGGR-limited pressure at the end of the 60-day shipping period was calculated to be 31.10 pounds per square inch gauge, which is well below the design pressure limit. Based on this bounding analysis, the payload will reach the 5% hydrogen limit before it reaches the design pressure limit of the RH-TRU 72-B. Because radiolysis is the primary mechanism for gas generation of both flammable and total gas, compliance with the flammable gas generation rate limit will always ensure compliance with the total gas generation rate limit for all solidified inorganic, solid inorganic, and solid organic RH-TRU content codes. Solidified organic waste, for which this logic is not applicable, is not expected in RH-TRU waste.

This page intentionally left blank.

6.0 PAYLOAD ASSEMBLY CRITERIA

This section presents an overview of the control procedures that shall be used by the sites in order to assemble a payload qualified for transport in the RH-TRU 72-B. The parameters described in previous sections shall be evaluated for selection of the payload. The canister identification (ID) number shall uniquely identify the canister. Each canister shall be assigned an approved content code. Wherever applicable, the physical, nuclear, and gas generation parameters (weight, fissile material, and decay heat) shall be checked against the limits after addition of the measurement error, as detailed in previous sections. If any of the limits are not met by the canister, it shall be rejected from transport (subject to mitigation or repackaging), marked, and segregated.

6.1 Requirements

The RH-TRU 72-B payload shall be authorized for shipment by the site TCO by completing and signing the PTCD.

The shipping records shall be maintained by the shipper for a minimum period of three years after the shipment is made.

This page intentionally left blank.

6.2 Methods of Compliance and Verification

6.2.1 Procedure for Certification of Individual RH-TRU Canisters

Generating and storage sites shall qualify an individual RH-TRU canister for transport in the RH-TRU 72-B by verifying that the canister meets the parameter requirements/limits listed in Table 6.2-1. The information in Table 6.2-1 must be completed for each canister. Table 6.2-1 may be reformatted for site use. All parameters noted on the form must be included in modified versions. Data on the parameters shall be obtained by the methods outlined in this document. Table 6.2-1 shall be completed as follows (section numbers in parentheses refer to sections in the RH-TRAMPAC that provide requirement and compliance and verification information for the transportation parameter described).

Identification Parameters

- Canister Identification (ID) # (Section 2.3): The site-specific ID number is unique to each canister of waste and provides a means for tracking process data records and package history. These records on the properties of the canister are referred to as the data package. The canister ID number is assigned prior to loading the waste in the canister. Information necessary for transporting canisters is entered into the data package under this ID number.
- Certification Site: This is the location at which transportation certification takes place.
- Canister Designated for Controlled Shipment? (Section 5.1.2): Indicate if the canister is designated for controlled shipment in accordance with the controls specified in Appendix 2.4 of the RH-TRU Payload Appendices[1]. If the canister is designated for controlled shipment, Table 6.2-2 must also be completed as described in Section 6.2.3.
- Content Code (Section 1.5): The site TCO shall ensure that the proper content code is assigned to the RH-TRU canister. In some cases, the RH-TRU canister may be loaded with inner containers. Inner containers of different waste types with different bounding G values and resistances may be packaged together in an RH-TRU canister provided the decay heat limit and FGGR limit for all inner containers are conservatively assumed to be the same as that of the inner container with the lowest decay heat limit and FGGR limit specified by the applicable content code. The RH-TRU canister shall be assigned the content code with the most restrictive limits. Credit for the use of dunnage inside the RH-TRU canister is as described in Appendix 2.5 of the RH-TRU Payload Appendices[1].
- Canister Type (Section 2.8): Identify the canister type as fixed lid, removable lid, NS15, or NS30.
- Filter Specifications of Section 2.4 are met: Compliance with the filter specifications in Section 2.4, if applicable, shall be ensured.

[1] U.S. Department of Energy (DOE), *RH-TRU Payload Appendices,* current revision, U.S. Department of Energy, Carlsbad Field Office, Carlsbad, New Mexico.

Inner Containers

- Filter Specifications of Section 2.4 are met: Compliance with the filter specifications in Section 2.4, if applicable, shall be ensured for containers packaged within the RH-TRU waste canister.

Transportation Parameters:

Compliance information for the transportation parameters shall be obtained from the data package for the canister. The following criteria shall be met:

- Criteria:
  - Residual liquids are <1% of the canister volume. (Section 2.5)
  - Sharp/heavy objects blocked/braced/suitably packaged. (Section 2.6)
  - Radioactive and nonradioactive pyrophorics are <1% (weight). (Section 4.1)
  - Explosives are not present. (Section 4.2)
  - Corrosives are not present. (Section 4.2)
  - Pressurized containers and compressed gases are not present. (Section 4.2)
  - Sealed containers that are >4 liters (nominal) are not present, except for solid inorganic waste packaged in metal. (Section 2.7)
  - Flammable VOCs are ≤500 ppm in the container headspace. (Section 5.1.5) [Note: If flammable VOCs are >500 ppm, the Flammability Assessment Methodology Program has been used (Appendix 3.2 of the RH-TRU Payload Appendices[1]) and the assigned content code reflects the resulting flammable (gas/VOC) concentration limits.]
- Weight Limit (Section 2.2): The loaded weight of each canister is obtained from its data package. The canister weight plus error shall be compared to the applicable maximum allowable weight limit.
- Fissile Mass Limits (Section 3.1): Compliance with the fissile mass requirements shall be either by compliance with the Pu-239 FGE limit or by compliance with the U-235 FEM limit. NOTE: The U-235 FEM limit is not applicable to the neutron shielded canister. The Pu-239 FGE or U-235 FEM determined for the canister shall be recorded. If compliance with a Pu-239 FGE limit has been demonstrated, the canister FGE value plus two times the error (i.e., two standard deviations) shall be compared to the applicable limit. If it can be demonstrated that the fissile content of the canister is below 10% of the applicable FGE limit, the FGE value shall be reported as less than 10% of the limit (e.g., "<31.5 grams"). In this case, no error needs to be assigned (enter "NA" for error). If compliance with the U-235 FEM limit has been demonstrated, the fissile content of the canister plus two times the error (i.e., two standard deviations) shall be compared to the <0.96% U-235 FEM limit.
- Flammable (Gas/VOC) Concentration Limits (Section 5.1): Compliance with the 5% limit on hydrogen concentration shall be by one of two methods:

- Compliance with Flammable Gas Generation Rate Limit (Section 5.1.3): If this method is used, the FGGR for the canister shall be determined according to the procedures described in Section 5.1.3. This FGGR shall be compared to the FGGR limit specified in the assigned content code.
- Compliance with Decay Heat Limit (Section 5.1.4): If this method is used, the decay heat for the canister shall be determined as described in Section 5.1.4. The decay heat plus error (i.e., one standard deviation) shall be compared to the decay heat limit specified in the assigned content code. If the waste meets watt*year criteria as described in Appendix 2.5 of the RH-TRU Payload Appendices[1], the decay heat limit based on the dose-dependent G value specified in the assigned content code shall be used.

- Radiation Dose Rate Limits (Section 3.2): Compliance with the dose rate requirements for NCT shall be by survey of the loaded package (see Section 6.2.2).

  Compliance with the HAC radiation dose rate limits shall be either by compliance with the General Payload Case limits or by compliance with the Controlled Self-Shielding Payload Case limits. NOTE: The Controlled Self-Shielding Payload Case is not applicable to the neutron shielded canister. The sum of partial fractions for radionuclides listed in Table 3.2-2 for canisters without neutron shielding and Table 3.2-3 for neutron shielded canisters and for radionuclides for which the limiting curie contents are calculated from the methodologies outlined in Appendix 5.5.3 or Appendix 5.5.4 of the RH-TRU 72-B SAR[2] shall be recorded. The recorded values shall be compared to the applicable limits (i.e., ≤1 for the sum of partial fractions for any combination of the radionuclides and ≤0.1 for the sum of partial fractions for radionuclides for which the limiting curie contents are calculated per Appendix 5.5.3 or Appendix 5.5.4 of the RH-TRU 72-B SAR[2]).

If the above requirements are met, proceed to Section 6.2.2.

6.2.2 Procedure for Certification of an RH-TRU 72-B Package

Compliance with the RH-TRU canister requirements ensures compliance with the RH-TRU 72-B packaging requirements, except for the weight and dose rate measurements for the loaded package. No additional controls, other than certifying the canister and meeting the weight and NCT dose rate requirements of Section 2.2 and Section 3.2, are needed for certifying the package for shipment. Compliance with the NCT dose rate limits for the loaded package shall be documented in accordance with site-specific procedures.

- RH-TRU 72-B OC Body ID No.: Record the ID number on the RH-TRU 72-B OC body.
- Shipment No.: Record the shipment number of the trailer.
- Date IV Closed: The date that the IV is closed shall be recorded.

[2] U.S. Department of Energy (DOE), *RH-TRU 72-B Safety Analysis Report,* current revision, U.S. Department of Energy, Carlsbad Field Office, Carlsbad, New Mexico.

- Time IV Closed: For canisters designated for controlled shipment only, the time that the IV is closed shall be recorded. For canisters not designated for controlled shipment, the time that the IV is closed need not be recorded (e.g., enter "NA" for time).
- Loaded Package Weight (Section 2.2): Ensure that the weight of the loaded RH-TRU 72-B does not exceed 45,000 pounds.
- Approved for Shipment: The site TCO shall verify that all of the requirements for the above transportation parameters are met as stated in this document. The site TCO shall sign and date the PTCD upon compliance, thereby authorizing the payload for shipment. If the requirements are not met, the canister is rejected (nonconformance disposition) and not qualified for shipment.

6.2.3 Shipments Designated as Controlled Shipments

Compliance with the 10-day shipping period is administratively controlled in accordance with the conditions of Appendix 2.4 of the RH-TRU Payload Appendices[1] and through the following steps. These steps must be completed by the site TCO, or designee, and the designated WIPP operations personnel, as applicable.

Loading Time

The loading time begins with the closure of the IV and ends with the departure of the shipment from the site. The loading time is limited to a maximum of 24 hours. The following steps must be completed to ensure compliance with the 24-hour loading time:

6.2.3.1 Review PTCD to determine date and time that the IV closure was completed. Record date and time on the Site Control Checklist for Controlled Shipments shown in Table 6.2-2 . Table 6.2-2 may be reformatted for site use provided that the same information is recorded.

6.2.3.2 Note date and time that the shipment containing the loaded package is scheduled to depart the site. Record date and time on the Site Control Checklist for Controlled Shipments.

6.2.3.3 Review dates and times recorded in Steps 6.2.3.1 and 6.2.3.2 to calculate total loading time. If total loading time is less than or equal to 24 hours, proceed to Step 6.2.3.4. If total Loading Time exceeds 24 hours, the package must be vented for a period at least as long as the period the RH-TRU 72-B was sealed and the closure process must be repeated. Return to Step 6.2.3.1 above.

6.2.3.4 Indicate compliance with the 24-hour loading time by signature on the Site Control Checklist for Controlled Shipments.

Transport and Unloading Time

The transport and unloading time begins with the departure of the shipment from the shipping site and ends with the venting of the package at the receiving site. The maximum transport and unloading time is 9 days. The following steps must be completed to document compliance:

6.2.3.5 Review Table 6.2-2 to determine the date and time that the package was scheduled to depart from the shipping site. Record this date and time on the Receiving Site

Control Checklist for Controlled Shipments shown in Table 6.2-3. Table 6.2-3 may be reformatted for site use provided that the same information is recorded.

6.2.3.6 Using the date and time recorded in Step 6.2.3.5, ensure that the package is vented within 9 days of the departure of the shipment from the shipping site by implementing the site unloading procedures specific to controlled shipments. Record date and time to show compliance. Operational procedures must be in place for unloading at the receiving site to ensure that the controlled shipments are not unattended beyond the maximum 9-day transport and unloading time. If total transport and unloading time exceeds 9 days, the shipment is noncompliant with the Certificate of Compliance for the applicable package and subject to the reporting requirements defined by 10 CFR §71.95.

6.2.3.7 Indicate compliance with the 9-day transport and unloading time by signature on the Receiving Site Control Checklist for Controlled Shipments.

Table 6.2-1 – Payload Transportation Certification Document (PTCD)

IDENTIFICATION PARAMETERS

Canister ID #: _____ Certification Site: _____

Canister Designated for Controlled Shipment?① o Yes o No

Content Code: _____ Canister Type: o Fixed Lid
o Removable Lid
o NS15
o NS30

Filter specifications of Section 2.4 are met.

INNER CONTAINERS

Filter specifications of Section 2.4 are met.

TRANSPORTATION PARAMETERS

Criteria:

- Residual liquids are <1% of canister volume
- Sharp/heavy objects blocked/braced/suitably packaged
- Radioactive and nonradioactive pyrophorics are <1% (weight)
- Explosives are not present
- Corrosives are not present
- Pressurized containers and compressed gases are not present
- Sealed containers >4 liters (nominal) are not present (except for solid inorganic waste packaged in metal)
- Flammable VOCs are ≤500 ppm in the container headspace
    - If not, the Flammability Assessment Methodology Program has been used to calculate flammable (gas/VOC) concentration limits

Weight Limit:

Value (pounds)	Error	Value + Error (pounds)	Limit (pounds)

Fissile Mass Limits:②

Compliance Method	Value	Error	Value + 2X Error	Limit
Fissile mass (Pu-239 FGE)②				_____ Pu-239 FGE
Fissile mass (U-235 FEM)②				<0.96% U-235 FEM

Flammable (Gas/VOC) Concentration Limits: ③

Compliance with FGGR Limit: ③

FGGR Value (mol/s)	FGGR Limit (mol/s)

Compliance with Decay Heat Limit: ③

Time since waste packaging _____

Does waste meet >0.012 watt*year criterion? o Yes o No

Decay Heat Value (watt)	Error	Value + Error (watt)	Decay Heat Limit (watt)

Radiation Dose Rate Limits: ④⑤

Compliance with Hypothetical Accident Conditions General Payload Case: ⑤

Sum of partial fractions for any combination of the radionuclides (i.e., in Table 3.2-2 or Table 3.2-3 and/or those for which limiting curie contents calculated per Appendix 5.5.3 or Appendix 5.5.4 of the RH-TRU 72-B SAR): $\sum_{i=1}^{n} \frac{a_i}{A_{GN_i}} = ____ \leq 1$

Sum of partial fractions for radionuclides for which limiting curie contents calculated per Appendix 5.5.3 or Appendix 5.5.4 of the RH-TRU 72-B SAR: $\sum_{i=1}^{n} \frac{a_i}{A_{GN_i}} = ____ \leq 0.1$

Compliance with Hypothetical Accident Conditions Controlled Self-Shielding Payload Case: ⑤

Sum of partial fractions for any combination of the radionuclides (i.e., in Table 3.2-2 and/or those for which limiting curie contents calculated per Appendix 5.5.3 or Appendix 5.5.4 of the RH-TRU 72-B SAR): $\sum_{i=1}^{n} \frac{a_i}{15xA_{GN_i}} = ____ \leq 1$

Sum of partial fractions for radionuclides for which limiting curie contents calculated per Appendix 5.5.3 or Appendix 5.5.4 of the RH-TRU 72-B SAR: $\sum_{i=1}^{n} \frac{a_i}{15xA_{GN_i}} = ____ \leq 0.1$

RH-TRU 72-B PACKAGE

RH-TRU 72-B OC Body ID No. _____

Shipment No.: _____

Date IV Closed: _____ Time IV Closed: _____ ⑥

Loaded package weight: _____ ≤ 45,000 pounds

APPROVED FOR SHIPMENT

I certify that the above RH-TRU 72-B packaging and contents meet the requirements for transport.

Transportation Certification Official

Date

①If the canister is designated for controlled shipment, Table 6.2-2 must also be completed for the shipment of this canister as specified in Section 6.2.3.

②Compliance with the fissile mass requirements shall be documented for either the Pu-239 FGE limit or the U-235 FEM limit. NOTE: The U-235 FEM limit is not applicable to the neutron shielded canister.

③Compliance with the flammable (gas/VOC) concentration limits shall be documented for either the FGGR limit or the decay heat limit.

④In addition, compliance with the dose rate requirements for normal conditions of transport (Section 3.2) shall be by survey of the loaded package.

⑤Compliance with the hypothetical accident conditions dose rate limits shall be documented for either the General Payload Case or the Controlled Self-Shielding Payload Case. NOTE: The Controlled Self-Shielding Payload Case is not applicable to the neutron shielded canister.

⑥Only required for canisters designated for controlled shipment (10-day shipping period).

Table 6.2-2 – Site Control Checklist for Controlled Shipments*

Shipment No. _____ Packaging No._____

To be completed by Site Transportation Certification Officer, or designee, for each package designated as a controlled shipment:

RH-TRAMPAC Section No.	Activity	Recorded Date	Recorded Time	Completion of Activity (Indicate by checkmark [√])
6.2.3.1	Record date and time of IV closure			
6.2.3.2	Record date and time the shipment containing the loaded package is scheduled to depart from the site			
6.2.3.3	Calculate and record total **Loading Time** [Limit = 24 hours]			
	Total Loading Time ≤1 day, proceed to No. 6.2.3.4. *Total Loading Time > 1 day, **STOP**. Vent package and repeat closure process.*			
6.2.3.4	I certify that the above data is accurate and compliant with the Loading Time limit of 24 hours, as specified in Section 6.2.3 of the RH-TRAMPAC. _____ / _____ TRANSPORTATION CERTIFICATION OFFICIAL (OR DESIGNEE) DATE			

*Controlled shipments (10 days) shall be made in accordance with the conditions specified in Appendix 2.4 of the RH-TRU Payload Appendices and Section 6.2.3. This table may be reformatted for site use provided that the same information is recorded.

Table 6.2-3 – Receiving Site Control Checklist for Controlled Shipments*

Shipment No. _____ Packaging No._____

To be completed by designated Receiving Site Operations Personnel for each package designated as a controlled shipment:

RH-TRAMPAC Section No.	Activity	Recorded Date	Recorded Time	Completion of Activity (Indicate by checkmark [√])
6.2.3.5	Record date and time that the package was scheduled to depart from the shipping site			
6.2.3.6	Vent package within 9 days of date and time recorded above and record vent date and time			
6.2.3.7	I certify that the above data is accurate and compliant with the Transport and Unloading Time limit of 9 days, as specified in Section 6.2.3 of the RH-TRAMPAC. _____ / _____ RECEIVING SITE OPERATIONS PERSONNEL DATE			

*Controlled shipments (10 days) shall be made in accordance with the conditions specified in Appendix 2.4 of the RH-TRU Payload Appendices and Section 6.2.3. This table may be reformatted for site use provided that the same information is recorded.

7.0 QUALITY ASSURANCE

This section describes the QA programs applicable to the RH-TRAMPAC. QA programs applicable to procurement, design, fabrication, assembly, testing, use, maintenance, and repair of the 72-B packaging are found in Chapter 9.0 of the RH-TRU 72-B SAR[1].

7.1 Requirements for Payload Compliance

Certification of authorized contents for shipment in the RH-TRU 72-B shall be performed under a written QA program that provides confidence, for both the shipper and receiver, that the RH-TRAMPAC requirements have been met. All waste shall be described in an approved content code.

[1] U.S. Department of Energy (DOE), *RH-TRU 72-B Safety Analysis Report,* current revision, U.S. Department of Energy, Carlsbad Field Office, Carlsbad, New Mexico.

This page intentionally left blank.

7.2 QA Compliance and Verification

Compliance methods are documented in DOE-CBFO-approved programmatic TRAMPACs and/or waste-specific data package TRAMPACs. The DOE-CBFO managing and operating contractor performs review of users' payload compliance procedures or data packages to ensure the requirements of this RH-TRAMPAC are met. The DOE-CBFO will periodically audit users' payload compliance QA programs.

This page intentionally left blank.