RC=CEL:155,100JFORMAT5.CEL AC=E7749

LR NOTES:

A. FOR GENERAL LICENSE RENEWAL NOTES REFER TO LR-M001-01.

B. COMPONENTS BEYOND THE HIGHLIGHTING ARE IN THE CONDENSATE DEMINERALIZER SYSTEM, WHICH IS LOCATED IN THE TURBINE BUILDING, WHERE (A)(2)-NSAS CONSIDERATIONS ARE NOT A CONCERN, AND ARE THEREFORE NOT IN THE SCOPE OF LICENSE RENEWAL.

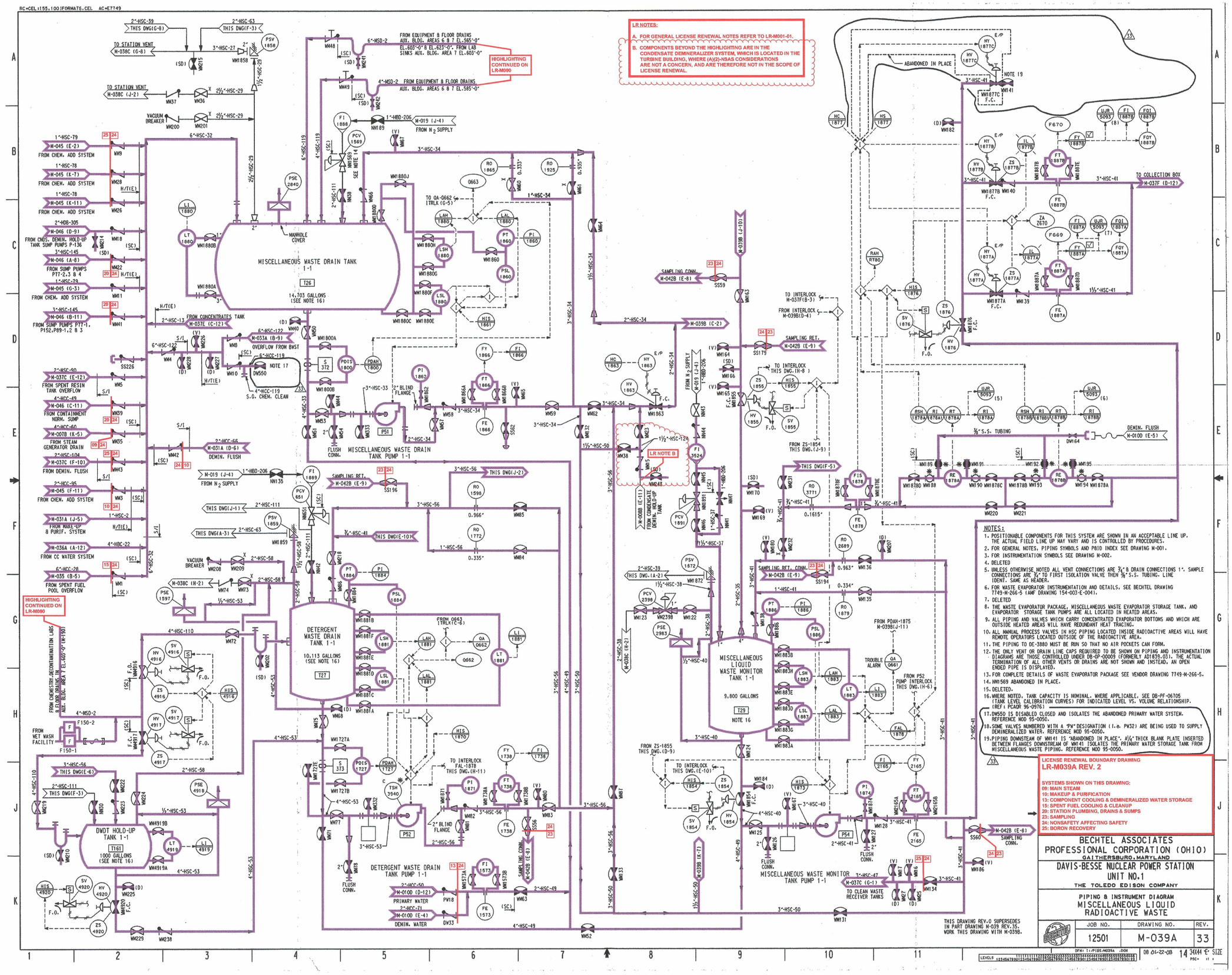

NOTES:

1. POSITIONABLE COMPONENTS FOR THIS SYSTEM ARE SHOWN IN AN ACCEPTABLE LINE UP. THE ACTUAL FIELD LINE UP MAY VARY AND IS CONTROLLED BY PROCEDURES.
2. FOR GENERAL NOTES, PIPING SYMBOLS AND P&ID INDEX SEE DRAWING M-001.
3. FOR INSTRUMENTATION SYMBOLS SEE DRAWING M-002.
4. DELETED
5. UNLESS OTHERWISE NOTED ALL VENT CONNECTIONS ARE ¾" & DRAIN CONNECTIONS 1". SAMPLE CONNECTIONS ARE ¾" TO FIRST ISOLATION VALVE THEN ⅜" S.S. TUBING. LINE IDENT. SAME AS HEADER.
6. FOR WASTE EVAPORATOR INSTRUMENTATION AND DETAILS, SEE BECHTEL DRAWING 7749-M-266-5 (AMF DRAWING 154-003-E-004).
7. DELETED
8. THE WASTE EVAPORATOR PACKAGE, MISCELLANEOUS WASTE EVAPORATOR STORAGE TANK, AND EVAPORATOR STORAGE TANK PUMPS ARE ALL LOCATED IN HEATED AREAS.
9. ALL PIPING AND VALVES WHICH CARRY CONCENTRATED EVAPORATOR BOTTOMS AND WHICH ARE OUTSIDE HEATED AREAS WILL HAVE REDUNDANT HEAT TRACING.
10. ALL MANUAL PROCESS VALVES IN HSC PIPING LOCATED INSIDE RADIOACTIVE AREAS WILL HAVE REMOTE OPERATORS LOCATED OUTSIDE OF THE RADIOACTIVE AREA.
11. THE PIPING TO DE-3880 MUST BE RUN SO THAT NO AIR POCKETS CAN FORM.
12. THE ONLY VENT OR DRAIN LINE CAPS REQUIRED TO BE SHOWN ON PIPING AND INSTRUMENTATION DIAGRAMS ARE THOSE CONTROLLED UNDER DB-OP-00009 (FORMERLY AD839.031). THE ACTUAL TERMINATION OF ALL OTHER VENTS OR DRAINS ARE NOT SHOWN AND INSTEAD, AN OPEN ENDED PIPE IS DISPLAYED.
13. FOR COMPLETE DETAILS OF WASTE EVAPORATOR PACKAGE SEE VENDOR DRAWING 7749-M-266-5.
14. WM569 ABANDONED IN PLACE.
15. DELETED.
16. WHERE NOTED, TANK CAPACITY IS NOMINAL. WHERE APPLICABLE, SEE DB-PF-06705 (TANK LEVEL CALIBRATION CURVES) FOR INDICATED LEVEL VS. VOLUME RELATIONSHIP.
17. DW550 IS DISABLED CLOSED AND ISOLATES THE ABANDONED PRIMARY WATER SYSTEM. REFERENCE MOD 95-0050.
18. SOME VALVES NUMBERED WITH A "PW" DESIGNATION (i.e. PW32) ARE BEING USED TO SUPPLY DEMINERALIZED WATER. REFERENCE MOD 95-0050.
19. PIPING DOWNSTEAM OF WM141 IS "ABANDONED IN PLACE". A¼" THICK BLANK PLATE INSERTED BETWEEN FLANGES DOWNSTREAM OF WM141 ISOLATES THE PRIMARY WATER STORAGE TANK FROM MISCELLANEOUS WASTE PIPING. REFERENCE MOD 95-0050.

LICENSE RENEWAL BOUNDARY DRAWING
LR-M039A REV. 2

SYSTEMS SHOWN ON THIS DRAWING:
09: MAIN STEAM
10: MAKEUP & PURIFICATION
13: COMPONENT COOLING & DEMINERALIZED WATER STORAGE
15: SPENT FUEL COOLING & CLEANUP
20: STATION PLUMBING, DRAINS & SUMPS
23: SAMPLING
24: NONSAFETY AFFECTING SAFETY
25: BORON RECOVERY

THIS DRAWING REV.0 SUPERSEDES IN PART DRAWING M-039 REV.35. WORK THIS DRAWING WITH M-039B.

BECHTEL ASSOCIATES PROFESSIONAL CORPORATION (OHIO)
GAITHERSBURG, MARYLAND

DAVIS-BESSE NUCLEAR POWER STATION UNIT NO.1
THE TOLEDO EDISON COMPANY

PIPING & INSTRUMENT DIAGRAM
MISCELLANEOUS LIQUID RADIOACTIVE WASTE

JOB NO.	DRAWING NO.	REV.
12501	M-039A	33

DFN: I:/PIDS/M039A .DGN DB 01-22-08 14 34X44 'E' SIZE

205