5135R8
7272 R8
13124 R9
16832 R9
26892 R9
31016-R10

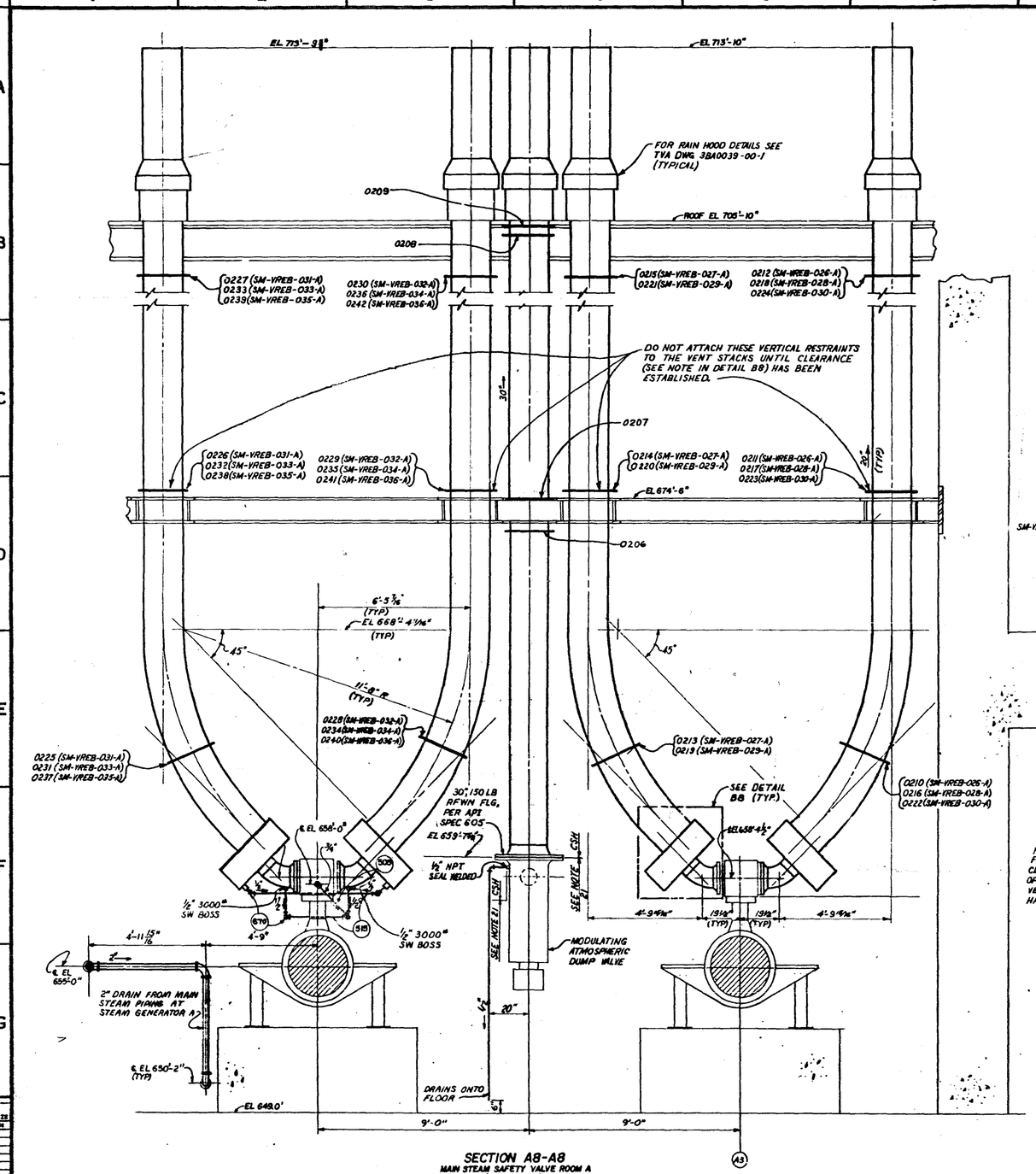


SECTION A8-A8
MAIN STEAM SAFETY VALVE ROOM A
(SHEET 04)

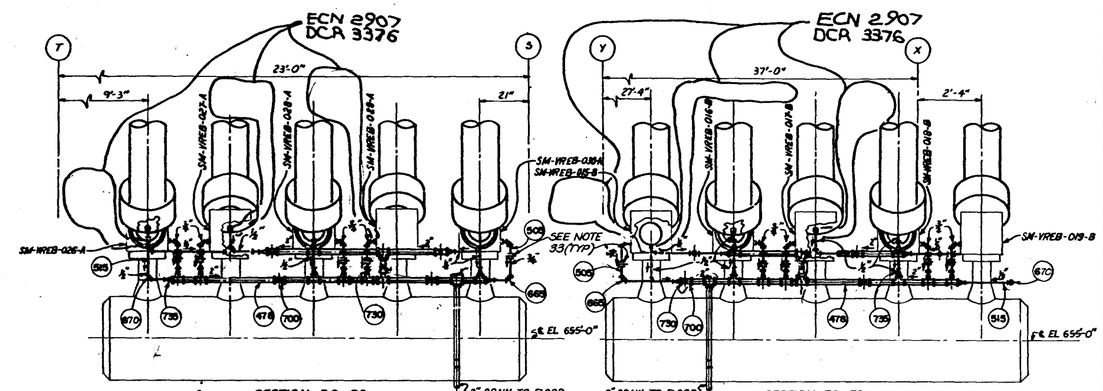


SECTION D8-D8
(SHEET 04)

SECTION E8-E8
(SHEET 03)

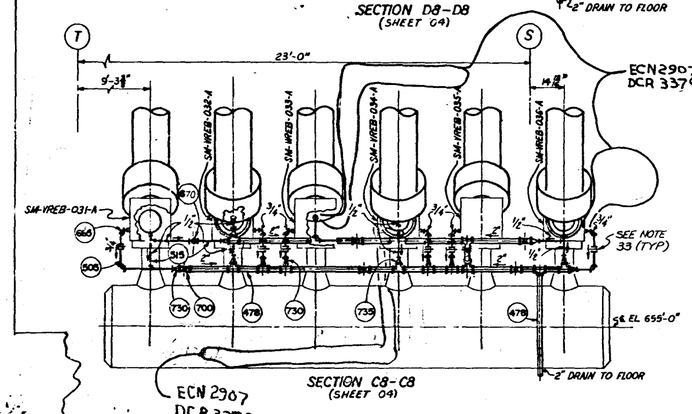


SECTION C8-C8
(SHEET 04)

NOTE:
ALL TEMP WELLS SHALL BE LOCATED 90° APART ON THE CROSS-SECTIONAL PLANE OF PIPING, ABOVE THE ℄ IN A HORIZONTAL RUN AND AT LEAST 2 PIPE DIA. APART UNLESS OTHERWISE NOTE.

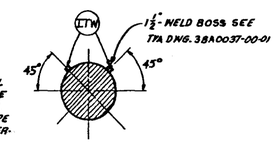


DETAIL A8
TYPICAL FOR TEMPERATURE CONNECTIONS
NOT TO SCALE

NOTE:
FOR GENERAL NOTES SEE SH-01 & FOR REFERENCE DWGS SEE SH-11.

TI APERTURE CARD

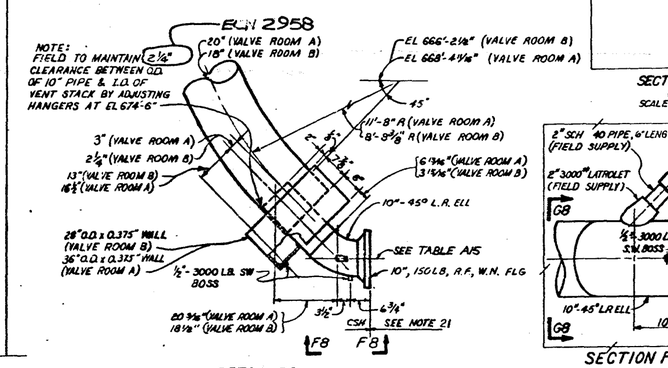


DETAIL B8
TYPICAL FOR ALL MAIN STEAM SAFETY VALVE VENTS
SCALE: 3/8" = 1'-0"
(SHEET 08)

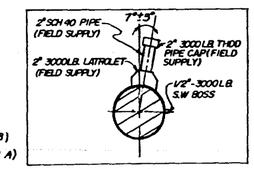


SECTION G8-G8
(SHEET 08)
SCALE: 3/32" = 1'-0"

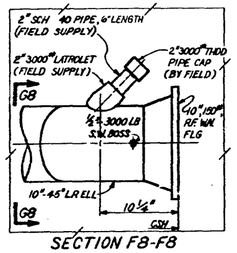


SECTION F8-F8
(SHEET 08)

SCALE 1/2" = 1'-0" EXCEPT AS NOTED

COMPANION DRAWINGS: SEE SHEET 01

| | | | | | | | | | | | | | | | |
|---|---|---|---|---|---|---|---|---|---|---|---|---|---|---|---|
| 10 | 2958, 2907 | 7-30-86 | TGD | MRD | MCM | RLM | BCS | | BCS | BCS | DWG | | | | RM |
| INCORPORATE ECN 2958, 2907; REANALYSIS PER DCR 3376 | | | | | | | | | | | | | | | |
| 9 | 2328 | 1-23-84 | | | DCM | | BCS | | BCS | BCS | | | | | |
| INCORPORATE FCR M-4825, NO REANALYSIS REQ'D | | | | | | | | | | | | | | | |
| 8 | S-1 | 2-17-83 | | | MA | | BCS | | | DWG | | | | | |
| INC FCR'S M-4399 & M-4440 NO REANALYSIS REQ'D | | | | | | | | | | | | | | | |
| 7 | S-1 | 1-7-82 | MCM | AFH | RLM | | BCS | | BCS | DWG | | | | | |
| INC FCR M-3908. REANALYSIS NOT REQUIRED. MINOR REVISIONS | | | | | | | | | | | | | | | |
| 6 | S-1 | 6-17-80 | | | | | | | | DWG | | | | | |
| ADDED FCR M-3676, NO REANALYSIS REQ'D. | | | | | | | | | | | | | | | |
| 5 | 931 | 10-25-81 | RCM | JH | RLM | JL | BCS | | BCS | BCS | DWG | | | | |
| ADDED ECN 931 | | | | | | | | | | | | | | | |
| 4 | S-1 | 3-25-81 | RET | MB | RLM | | BCS | | BCS | DWG | DWG | | | | |
| MINOR REVISIONS; REANALYSIS NOT REQUIRED | | | | | | | | | | | | | | | |
| 3 | S1 | 7-24-80 | MCD | PFG | RET | CWM | BCS | | BCS | DWG | DWG | | | | |
| ADDED IQT MARK NUMBERS; I'S TO INSTRUMENT CONNECTIONS; AND MINOR REVISIONS; REANALYSIS NOT REQUIRED | | | | | | | | | | | | | | | |
| 2 | S1 | 12-12-79 | MCD | MJE | JWM | CWM | BCS | | BCS | BCS | DWG | | | | |
| MINOR REVISIONS; REANALYSIS NOT REQ'D | | | | | | | | | | | | | | | |
| 1 | ECN-S1 | 7-27-79 | MCD | MCC | CJM | CWM | BCS | | BCS | BCS | DWG | | | | |
| MINOR REVISIONS | | | | | | | | | | | | | | | |
| REV NO. | ECN NO. | DATE | DRAWN | DESIGN | CHKD | SUPV | CHKD | SUPV | DWG | DESIG | ECCS | APPD | | | |

DRAWN W.G. DONOVAN
DESIGN J.S. RUCKETT/S.J. COBB
CHKD D.L. SEALS
SUPV L.A. CONGDUMPE
INSP
ENGINEER B.C. Shell

POWERHOUSE
UNITS 1 & 2

# MECHANICAL SAFETY VALVE VENTS AND MISCELLANEOUS MAIN STEAM

BELLEFONTE NUCLEAR PLANT
TENNESSEE VALLEY AUTHORITY
DIVISION OF ENGINEERING DESIGN

Q

| SUBMITTED | RECOMMENDED | APPROVED |
|---|---|---|
| B.C. Shell | J.S. Ruckett | R.M. Rodgers |

KNOXVILLE | 12-19-77 | 88 | M | 38W0409-SV-08 REV 10

RECORD DRAWING AS CONSTRUCTED

ANALYSIS TYPE CALC REQD AT R10
CALC # later
VER by
RELEASED ON R

INSPECTED AND APPROVED FOR ISSUE
DESIGN PROJECT MANAGER

PRINTS REQD-4

| DIV OR PROJ | DWG | SIZE |
|---|---|---|
| | 7 | H |
| NE | | |
| EE | | |
| CE | | |
| AD | | |
| CD | | |
| ED | | |
| MD | | |
| SF | | |
| SW | | |
| BL | | |
| PA | | |

8508060316