TABLE A14

HEAT TRACE

(TO COMPLETE WIRING INFORMATION, SEE TYPICAL WIRING FIGURE A14)

COL	1	2	3	4	5	6	7	8	9	10
ROW	VENDOR CKT NO.	UNIT	EHCT-EJBT-	ECA3-	ECAI-	ECAI-	TERM NO.	TERM NO.		
1	17	1	101	9401	9601	9901	1	4		
2	18	1	102	9402	9602	9902	2	5		
3	19	2	101	9401	9601	9901	1	4		
4	20	2	102	9402	9602	9902	2	5		

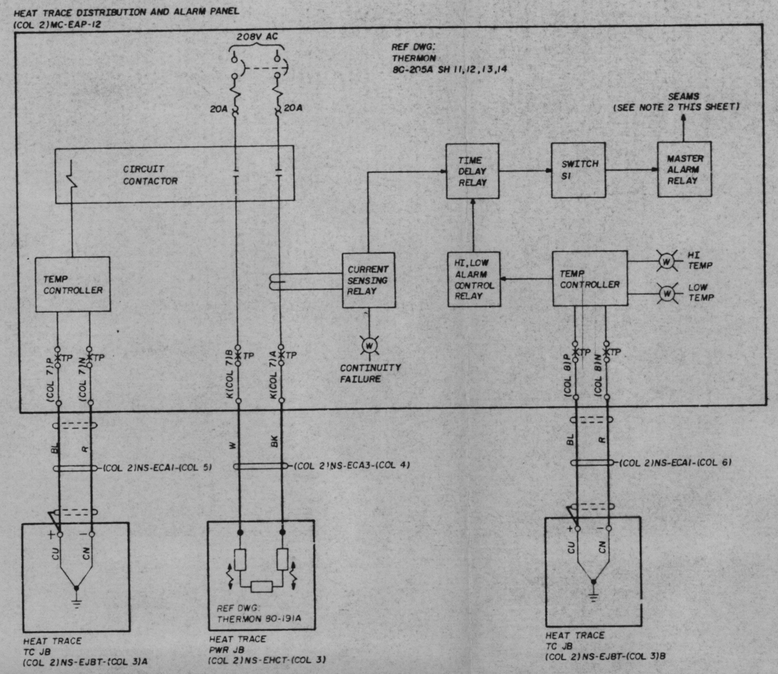

FIGURE A14

HEAT TRACE CKT, EHCT-(COL 3), VENDOR CKT (COL 1)

TYPICAL HEAT TRACE WIRING (SEE TABLE A14 FOR SPECIFIC INFORMATION)

NOTES:

1. FOR GENERAL NOTES AND SYMBOLS SEE 5GW0640-NS-01.
2. LOSS OF HEATER CONTINUITY, HIGH AND LOW TEMPERATURE, TEST MODE AND UNDER VOLTAGE IS MONITORED BY SEAMS AND IS SHOWN ON 5GW1740-MC-05 AND 5GW2740-MC-05.

SYMBOLS:

TP
O-O - TEST POINT (DISCONNECTING TERMINAL BLOCK)

PRC APERTURE CARD

REGULATORY DOCKET FILE
Docket # 50-390/391
Control # 8304050236
Date 5-25-83
of Documents

REV NO.	ECN NO.	DATE	DRAWN	CHKD	SUPV	ENGR	MGR	ENGR	CHKD	SUPV

DRAWN R.D. Chester
DRFMN J.L. Gibbon
CHKD J.L. Bogue
SUPV W.R. Watson
MGR
ENGINEER

SCALE: NONE — EXCEPT AS NOTED

GENERAL
UNITS 1 & 2

SCHEMATIC DIAGRAM
REACTOR BLDG
SPRAY SYSTEM

BELLEFONTE NUCLEAR PLANT
TENNESSEE VALLEY AUTHORITY
DIVISION OF ENGINEERING DESIGN

N

SUBMITTED — RECOMMENDED — APPROVED

KNOXVILLE | 3-19-81 | 88 | E | 5GW0640-NS-14 | R0

RECORD DRAWING AS CONSTRUCTED

INSPECTED AND APPROVED FOR ISSUE

PRINT
SIZE

JOB OR PROJ NE EE CE AD CD ED MD TW BL PA
PRINTS REQD-R