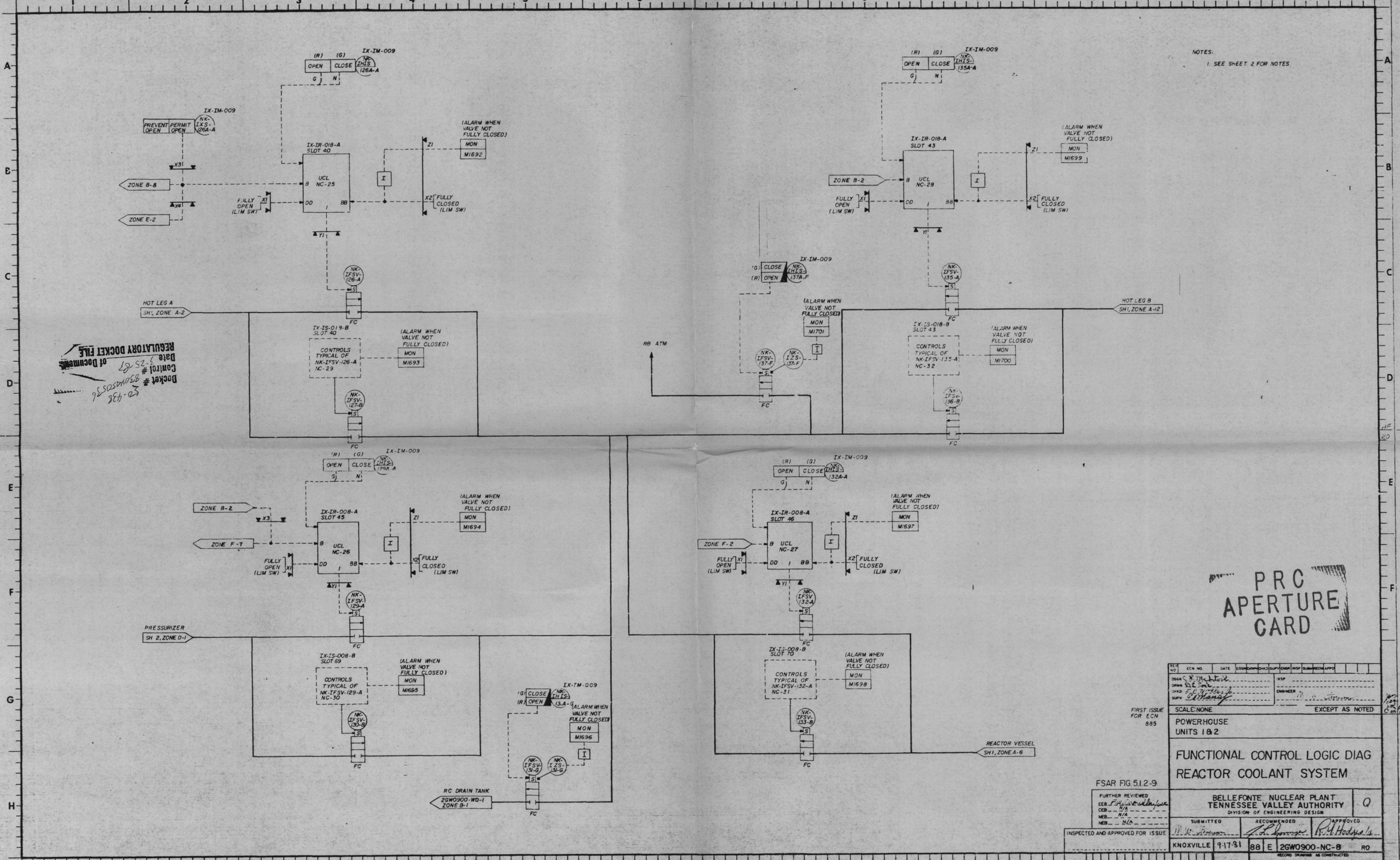

NOTES:

1. SEE SHEET 2 FOR NOTES.

PRC APERTURE CARD

Docket # 50-438 50-439
Control # 8504150536
Date 3-25-85
of Documents
REGULATORY DOCKET FILE

REV NO	ECN NO.	DATE	DSGN	DRWN	CHKD	SUPV	ENGR	INSP	SUBM	RECM	APPD

DSGN C. N. Hutchins
DRWN E. C. Smith
CHKD F. C. Arthur
SUPV J. O. Manage
INSP
ENGINEER

FIRST ISSUE FOR ECN 885

SCALE: NONE — EXCEPT AS NOTED

POWERHOUSE
UNITS 1 & 2

FUNCTIONAL CONTROL LOGIC DIAG REACTOR COOLANT SYSTEM

FSAR FIG. 5.1.2-9

FURTHER REVIEWED
EEB F. H. Wiedenhofer
CEB N/A
MEB N/A
NEB N/A

INSPECTED AND APPROVED FOR ISSUE

BELLEFONTE NUCLEAR PLANT
TENNESSEE VALLEY AUTHORITY
DIVISION OF ENGINEERING DESIGN

Q

SUBMITTED	RECOMMENDED	APPROVED
W. W. Stinson	J. L. Grange	R. H. Hodges

KNOXVILLE | 9-17-81 | 88 | E | 2GW0900-NC-8 | R0

RECORD DRAWING AS CONSTRUCTED

PRINT
SIZE
BA DR PROJ ME EE CE AC CO ED MD SW BL PA
PRINTS 4200-R