AREVA

NRC/TN Pre-Application Meeting

New CoC Application
TN-LC Transport Cask

NRC Headquarters, March 30, 2011

Transnuclear Inc.

AREVA

Agenda

- Description of Transport Cask and Payload
- Description of
  - Structural Analyses
  - Thermal Analyses
  - Nuclear (Criticality and Shielding) Analyses
- Licensing Analysis Approach
- Safety Analysis Report Format
- Summary

General Overview

- **Loaded weight with impact limiters limited to 25 metric tons**
- **Payload: commercial and research reactor fuel**
  - **Research reactor fuel**
  - **LWR fuel (assemblies or pins)**
- **Certificate type B(U)F-96**

TN-LC Transport Cask General overview

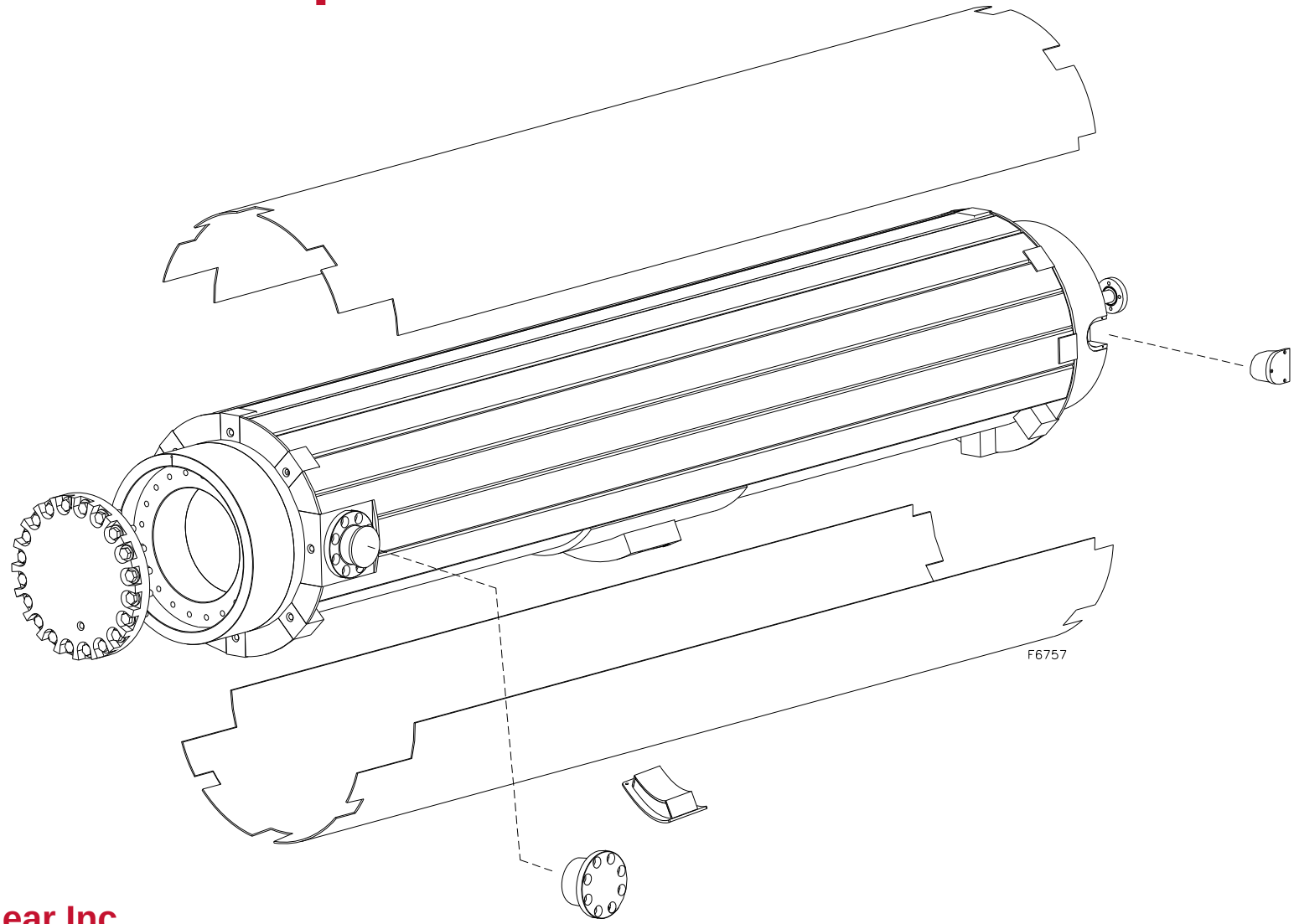

TN-LC Dimensions

Nominal Dimensions (in)	TN-LC
Packaging overall length with impact limiters	230.00
Packaging overall length without impact limiters	197.50
Cask impact limiter outside diameter	66.00
Cask outside diameter without impact limiter	38.50
Weight (metric tons)	
Maximum loaded weight (including impact limiters)	< 25

TN-LC General Design

- Lead and steel for gamma shielding
- Resin for neutron shield
- Wood impact limiters
- Elastomer seals

Licensing Analysis Approach (1/3)

- **Cask design is a derivative of the MP197/MP197HB with the following differences**
  - **Smaller (weight < 25 metric tons)**
  - **No canister**
  - **Additional gamma shielding in closure lid and cask bottom**
  - **Pocket bottom trunnions**
- **Fuel analysis per ISG-19 (reconfigured fuel and water in-leakage)**
- **Methodologies used for the payloads are similar to the analyses in the MP197HB application**

Licensing Analysis Approach (2/3)

- **Structural**
  - **Impact analyses based on MP197 drop test**
  - **Multiple payloads evaluated to select appropriate bounding configuration for transport cask structural evaluation**
- **Thermal**
  - **Wet and dry loading / unloading conditions have been evaluated**
  - **Evaluations performed with and without ISO container**
  - **Bounding case from NCT is analyzed for HAC**

Licensing Analysis Approach (3/3)

- **Shielding**
  - **One bounding source term per payload configuration is evaluated for NCT**
  - **The models and source terms used for HAC are different from NCT**
    - Axial and radial lead slump considered
    - No credit taken for the neutron shielding resin or the impact limiters wood
- **Criticality**
  - **All fuel modeled as fresh fuel (no BurnUp credit)**
  - **NCT and HAC analyses both include water in-leakage and fuel reconfiguration**

Safety Analysis Report Format

- The format will follow Reg. Guide 7.9
- Application will consist of a stand-alone Safety Analysis Report
- Safety Analysis Report will include detailed descriptions, drawings and the safety analysis of the cask and itsauthorized payloads

Summary

- **The application is largely based on previous submittals**
- **Bounding values used in many evaluations to simplify calculations**
- **Lessons learned based on recent NRC interactions with all vendors are already accounted for in this submittal**

TN-LC Transport Cask

Structural Evaluation

March 30, 2011

Transnuclear Inc.

AREVA

Overview of Structural Analysis

- **Components**
  - **Impact Limiter**
    - Decelerations calculated to be used in subsequent analysis
    - Impact limiter crush depth obtained to make sure that the cask does not bottom out
  - **Transport Cask**
  - **Basket Assembly**
  - **Fuel**

AREVA

Impact Limiter Analysis Overview

- **MP197 1/3 scale drop test performed for the CoC 9302 license application**
- **Impact analysis methods using LS-DYNA code were benchmarked to the 1/3 scale drop test in the MP197HB revision to CoC 9302 (under NRC review)**
- **Same analysis methods using LS-DYNA code are used for the analysis of the full scale TN-LC Transport Cask with Impact Limiters**

AREVA

MP197 1/3 Scale Drop Test

- **The drop tests accident conditions were as follows:**
  - **30’ End Drop (-20 ºF)**
  - **30’ Side Drop (Room Temperature)**
  - **30’ 20º Slap Down (Room Temperature)**
- **Impact limiters consist of sections of redwood and balsa enclosed in a stainless steel shell**
- **Cask test model consists of a solid carbon steel body which matches the weight and moment of inertia of the MP197 Transport Cask**

AREVA

MP197 1/3 Scale Benchmark LSDYNA Analysis

- **The benchmark analyses have been reviewed by NRC staff**
- **The analyzed drop were same as test:**
  - **30' End Drop (-20 ºF)**
  - **30' Side Drop (Room Temperature)**
  - **30' 20º Slap Down (Room Temperature)**
- **Calculated decelerations, wood crush, and impact duration compared to the drop test**

AREVA

MP197 1/3 Scale Benchmark LSDYNA Analysis – Results

- **Calculated decelerations (max value and time duration) are close to or bound the measured drop test decelerations**
- **The methodology, material models, and material properties were benchmarked**

AREVA

TN-LC Impact Limiter Analysis

- **Full scale model**
- **Same methodology as the benchmarked 1/3 scale LS-DYNA analyses**
- **Material properties**
  - **Crush strength of wood is dependant on various properties (density, moisture content, etc)**
  - **A range of wood strength is analyzed**
  - **The stiffest properties are increased by 40% and the softest properties are decreased by 10% to bound the potential range of stiffness and temperature effects**

AREVA

TN-LC Impact Limiter Analysis – Analyses Performed

Load Cases	Firm Wood Properties	Soft Wood Properties
30 ft End Drop	X	X
30 ft Side Drop	X	X
30 ft Slap Down 5° Angle	X	X
30 ft Slap Down 10° Angle	X	-
30 ft CG Over Corner Drop	X	X
1 ft End Drop	X	-
1 ft Side Drop	X	-

AREVA

TN-LC Impact Limiter Analysis – Model

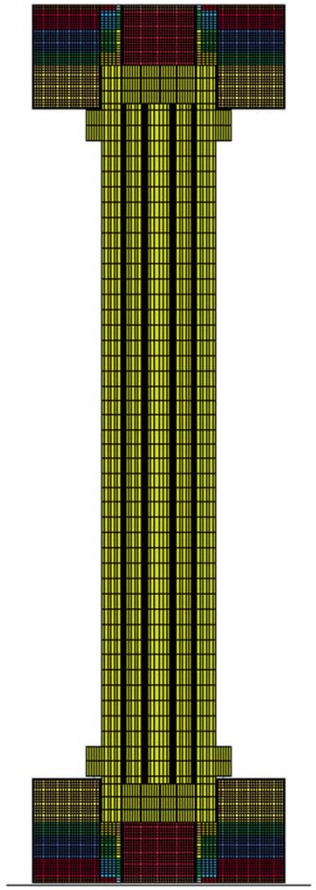

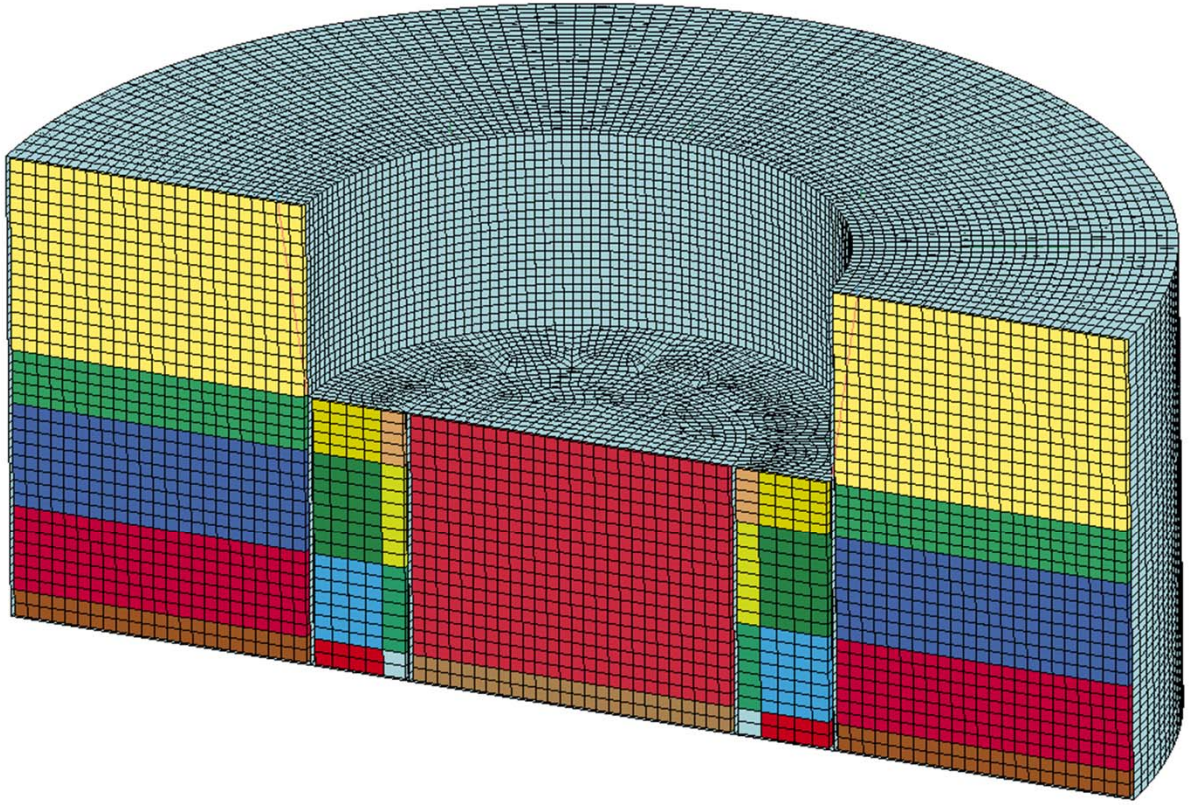

Transport Package Weights

Transport Package Weight (w/o Payload)	**44 kips**
Maximum Payload Weight	**7 kips**
Bounding Payload Weight Used for Cask Structural Evaluation	**8 kips**

AREVA

Transport Package Structural Design Criteria

Component	Design Criteria
Transport Cask	ASME, Subsection NB Lid Bolt – NUREG 6007
Basket Assembly	ASME, Subsection NG

AREVA

Transport Cask Major Components – Top End

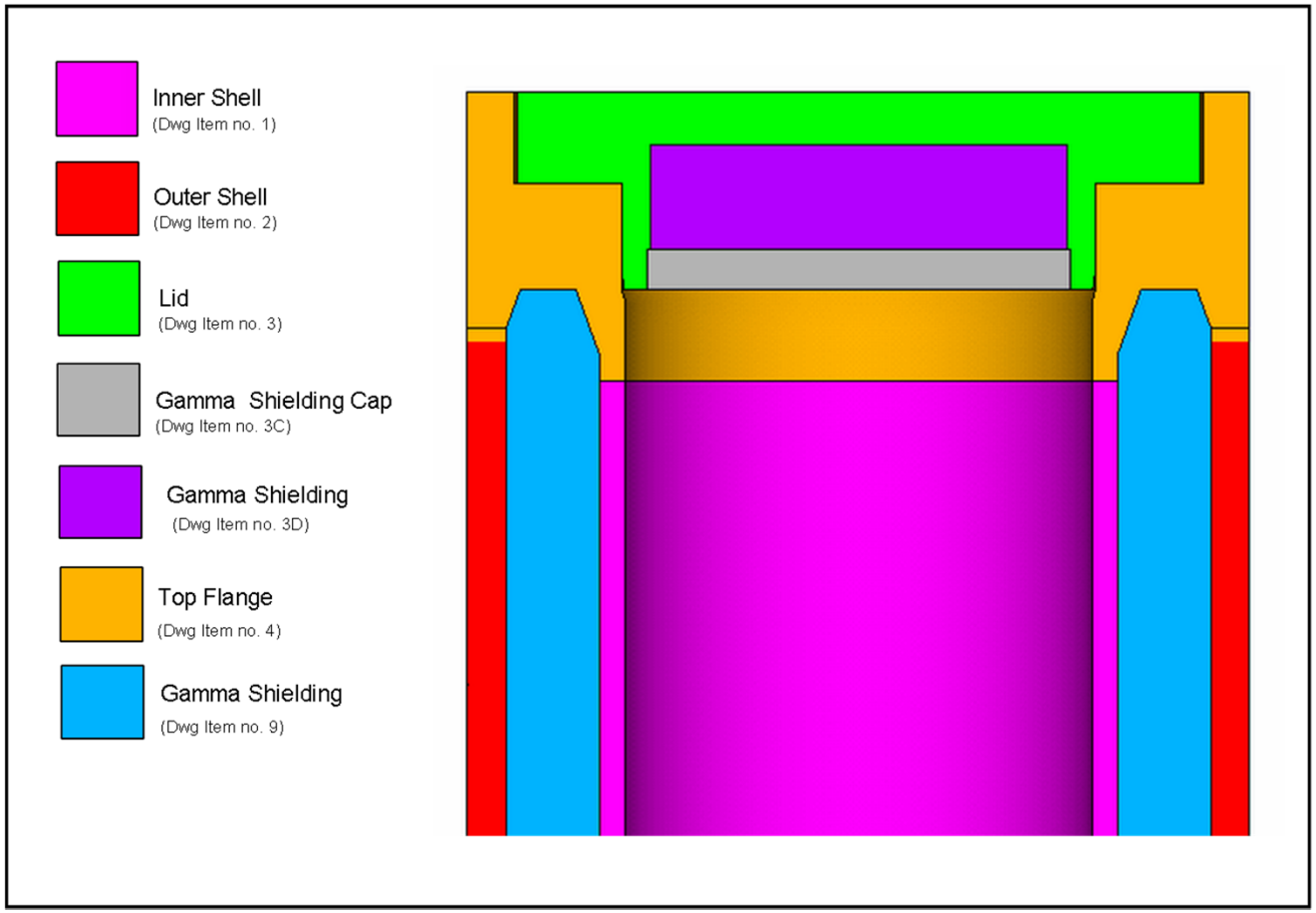

AREVA

Transport Cask Major Components – Bottom End

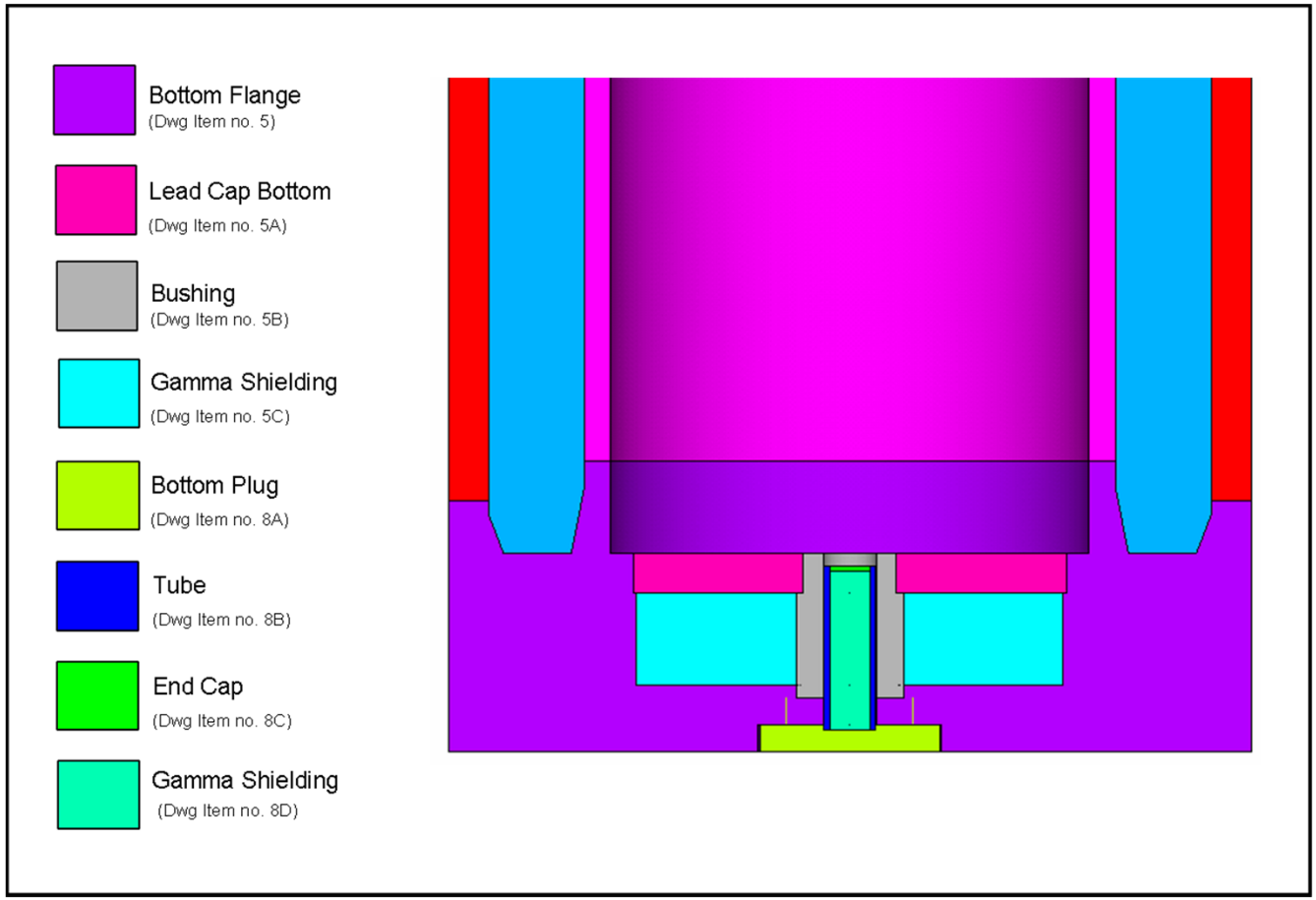

Transport Package Part 71 Design Loads

- **NCT**
  - **Dead Weight**
  - **Lifting and Tiedown**
  - **Thermal**
  - **Pressure**
  - **Shock & Vibration**
  - **1 Foot Drop**
    - End Drop
    - Side Drop
- **HAC**
  - **30 Foot Drop**
    - End Drop
    - Side Drop
    - CG Over Corner Drop
    - Slap Down (5° and 10°)
  - **Puncture**
  - **Immersion**
  - **Fire**

AREVA

Transport Cask NCT – Individual Loads

Load No	Individual Loads
1	Bolt Preload
2	Internal Pressure
3	External Pressure
4	Hot Environment (100 °F Ambient Temp)
5	Cold Environment (-40 °F Ambient Temp)
6	3G Lifting
7 - 8	Rail Car Shock Loads
9	1Ft End Drop on Lid End
10	1Ft End Drop on Bottom End
11	1Ft Side Drop
12	1G Gravity Loading

AREVA

Transport Cask NCT – Load Combinations

Load Case	Load Combination	Individual Loads Participating in Load Combination										
		1	2	3	4	5	7	8	9	10	11	12
13	Hot Environment	X	X		X							X
14	Cold Environment	X		X		X						X
15	Increased Ext. Pressure	X		X		X						X
16	Minimum Ext. Pressure	X	X		X							X
17	Rail Car Vibration	X	X		X			X				
18		X		X		X		X				
19	Rail Car Shock	X	X		X		X					
20		X		X		X	X					

AREVA

Transport Cask NCT – Load Combinations

Load Case	Load Combination	Individual Loads Participating in Load Combination										
		1	2	3	4	5	7	8	9	10	11	12
21	One Foot End Drop on Lid End	X	X		X				X			
22		X		X		X			X			
23	One Foot End Drop on Bottom End	X	X		X					X		
24		X		X		X				X		
25	One Foot Side Drop	X	X		X						X	
26		X		X		X					X	

AREVA

Transport Cask HAC – Load Combinations

Load No	Load Combination
27	30 Ft. End Drop on Bottom End
28	
29	30 Ft. End Drop on Lid End
30	
31	30 Ft. Side Drop
32	
33	30 Ft. CG Over Corner Drop on Bottom End
34	
35	30 Ft. CG Over Corner Drop on Lid End
36	
37	30 Ft. Slap Down Corner Drop
41	Immersion + Weight
42	Fire Accident + Weight

AREVA

Transport Cask Structural Evaluation Methods

» **Similar to methods used for the MP197HB transport cask (CoC 9302*)***

Loading	Previously Reviewed in the **MP197HB** Transport Cask Analysis	Methods Used in **TN-LC** Transport Cask Analysis

NCT	• MP197HB Transport Cask Body
	  • 3D ANSYS Model
	  • Elastic/Equivalent Static Analysis
	
	• Lid Bolt
	  • Evaluated based on NUREG-6007 methodology and criteria
	
	• Upper Trunnions
	  • Evaluated for critical loads by hand calculations using ANSI N14.6 criteria
		• TN-LC Transport Cask Body
		  • 3D ANSYS Model
		  • Elastic/Equivalent Static Analysis
		
		• Lid Bolt
		  • Evaluated based on NUREG-6007 methodology and criteria
		
		• Upper Trunnions
		  • Evaluated for critical loads by hand calculations using ANSI N14.6 criteria

AREVA

Transport Cask Structural Evaluation Methods

» **Similar to methods used for the MP197HB transport cask (CoC 9302*)***

Loading	Previously Reviewed in the **MP197HB** Transport Cask Analysis	Methods Used in **TN-LC** Transport Cask Analysis

HAC	• MP197HB Transport Cask Body
	  • Same 3D ANSYS models as for Normal Loads
	  • Equivalent Static elastic and elastic-plastic analysis
	
	• MP197HB Transport Cask
	  • 2D ANSYS model used for lead slump and inner containment buckling analysis
	
	• Lid Bolts
	  • Secondary impact evaluated using a dynamic LS-DYNA analysis
		• TN-LC Transport Cask Body
		  • Same 3D ANSYS models as for Normal Loads
		  • Equivalent Static elastic and elastic-plastic analysis
		
		• TN-LC Transport Cask
		  • 3D ANSYS model used for lead slump and inner containment buckling analysis
		
		• Lid Bolts
		  • Secondary impact evaluated using a dynamic LS-DYNA analysis

AREVA

Transport Cask Structural Analysis– Stress Reporting

- **For reporting of stresses, the cask body is divided into eleven components: Outer Shell, Inner Shell, Bottom Plug, Bushing, Lead Cap (Bottom), Lid, Top Flange, Bottom Flange, End Cap, Tube, Gamma Shielding Cap**
- **For each component, stresses are classified in accordance with ASME code as membrane, membrane plus bending, etc.**
- **The highest stress intensity values, obtained for each component, are identified and compared against ASME Code stress allowables.**

AREVA

Payload (Basket) Analysis Approach/Methods

- 3D finite element model and hand calculations are used for side and end drop analysis
- The finite element analysis methodology is similar to methodology used in MP197HB analysis (quasi-static analyses)
- Dynamic load factors are calculated for each basket type
- g loads (DLF x cask baseline g load) are calculated for each basket type for NCT and HAC

AREVA

Payload (Basket) NCT Loads and Load Combinations

Load Case	Individual Loads				
	1 Ft Side Drop	1 Ft Bottom End Drop	1 Ft Lid End Drop	Thermal Hot	Thermal Cold
1	X			X	
2	X				X
3		X		X	
4		X			X
5			X	X	
6			X		X

AREVA

Payload HAC Loads and Load Combinations

Load Case	Individual Loads			
	30 Ft Side Drop	30 Ft Bottom End Drop	30 Ft Lid End Drop	Thermal Hot/Cold
7	X			X
8		X		X
9			X	X

AREVA

Summary of Structural Analysis

- **Transport Cask**
  - **Bounding payload is used for transport cask structural evaluations**
  - **Methodologies used are similar to MP197HB transport cask structural evaluations (CoC 9302)**
- **Payloads (basket)**
  - **The methodologies used for the basket are similar to the analyses in the MP197HB application**

AREVA

TN-LC Transport Cask

Thermal Evaluation

March 30, 2011

Transnuclear Inc.

AREVA

Overview

- **TN-LC Cask Thermal Characteristics**
  - **Cask consists of multiple shells providing conduction path**
    - Inner shell – stainless steel
    - Gamma shield – lead
    - Outer shell – stainless steel
    - Neutron shield boxes – aluminum
    - Neutron shield shell – stainless steel
  - **Content**
    - Commercial fuel assemblies
    - Research reactor fuel elements
  - **Maximum heat load 3 kW**
  - **Transportable with or without ISO container**
  - **Thermal conditions as required in 10 CFR 71**
    - NCT 100 °F with insolation
    - NCT -20 °F without insolation
    - Cold condition -40 °F ambient without insolation
    - HAC, free drop, puncture, fire, cool-down
  - **Wet and dry loading / unloading conditions**

Overview

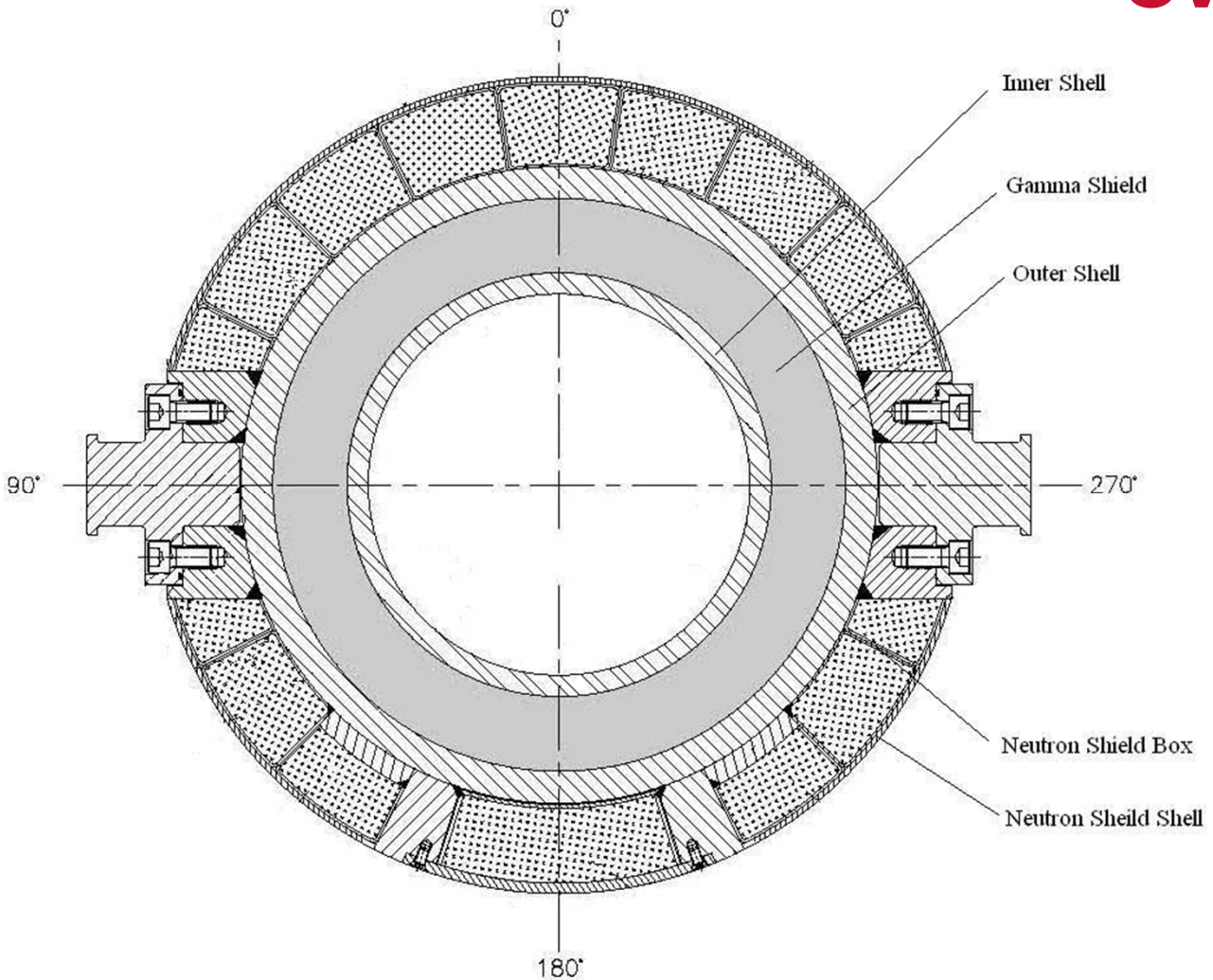
0°
90°
270°
180°
Inner Shell
Gamma Shield
Outer Shell
Neutron Shield Box
Neutron Sheild Shell

Thermal Evaluations

- **Effective Fuel Conductivities**
  - **2D ANSYS Model**
  - **Irradiated UO2 properties for commercial fuels**
  - **Uranium Zirconium Hydride Alloy (UZrH) or Uranium-Aluminum (U-Al) for research reactor fuels**
  - **Heat transfer within Fuel Assembly/Element**
    - Conduction
    - Thermal radiation
  - **Backfill gas**
    - Helium for NCT/HAC
    - Air for dry loading

Thermal Evaluations

- **Thermal Evaluations for TN-LC Transport Cask, NCT**
  - **3D ANSYS Model**
  - **Heat load applied as heat flux (e.g. over active fuel length)**
  - **Evaluations performed with and without ISO container**
    - Bounding NCT occurs for cask within ISO container
  - **Heat transfer within ISO container:**
    - Free convection in closed cavity within ISO container
    - Thermal radiation and conduction within ISO container
    - Thermal radiation and free convection on container outer surface
  - **Heat transfer without ISO container:**
    - Thermal radiation and free convection on cask outer surface
  - **Maximum cask inner shell temperature is used as boundary condition to evaluate thermal performance of the contents**

Thermal Evaluations

- **Thermal Evaluations for TN-LC Baskets, NCT**
  - **2D ANSYS Model**
  - **Heat load applied as heat generation rate to the homogenized fuel elements/assemblies**
  - **Maximum cask inner shell temperature is used as uniform temperature boundary condition**
  - **Heat transfer within Basket**
    - Conduction
    - Thermal radiation

Fuel Assembly Model

- **Fuel Pins 2D model**

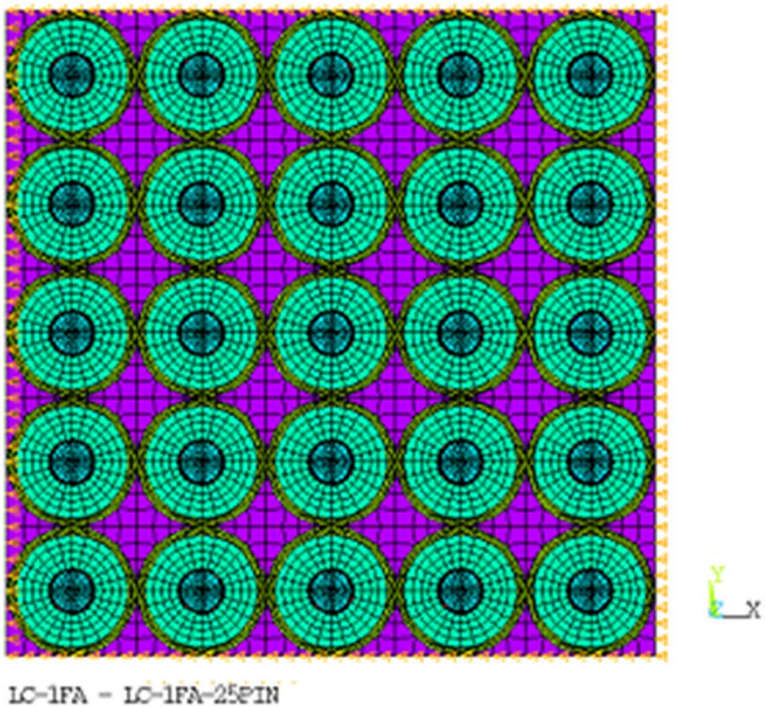

Cask Model NCT

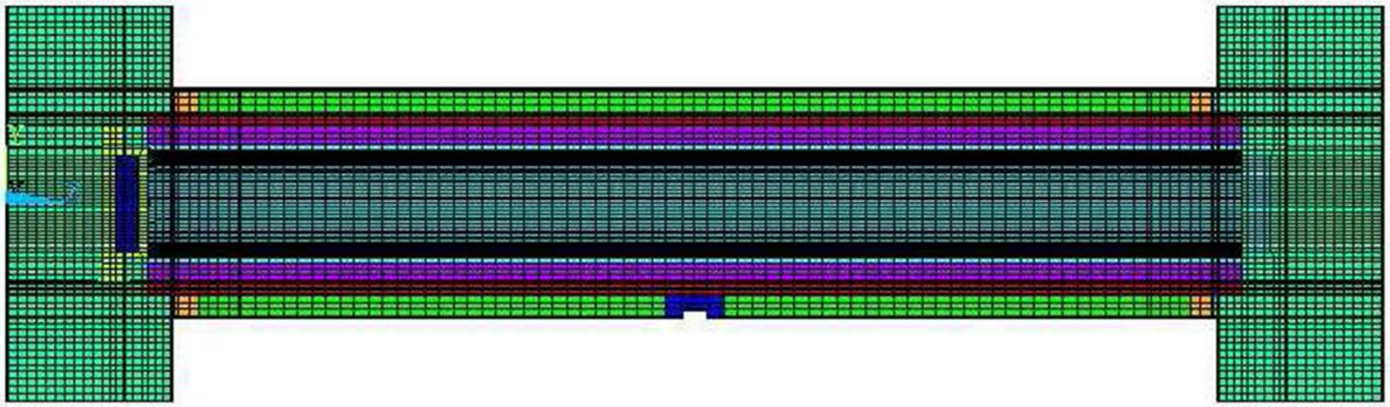

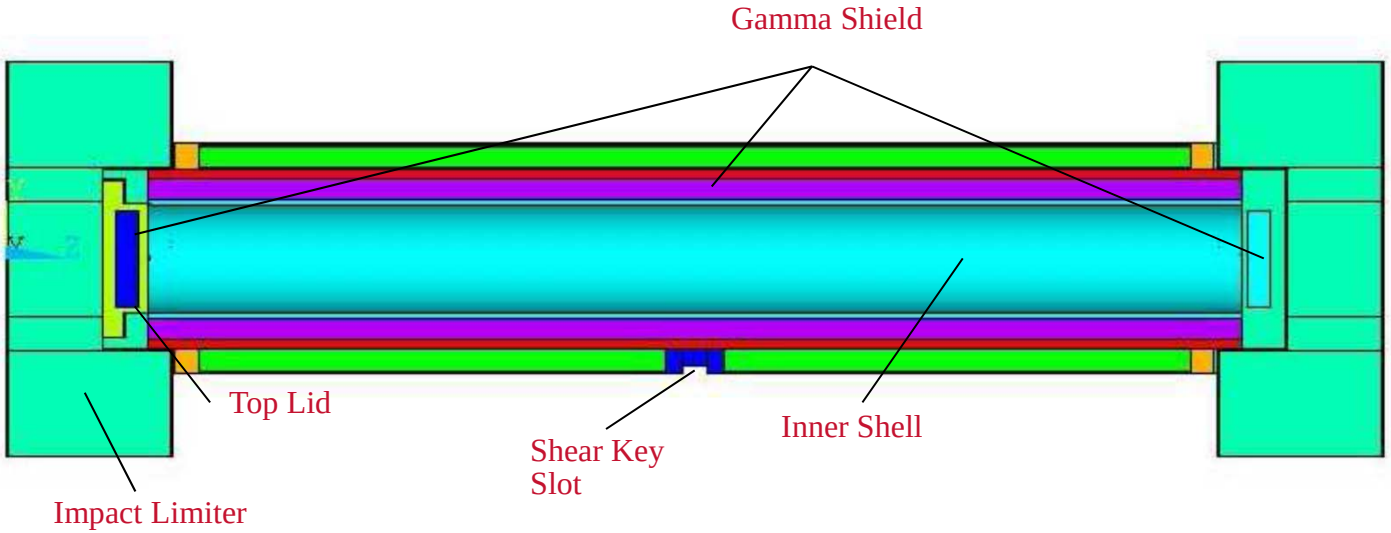

Cask Model NCT

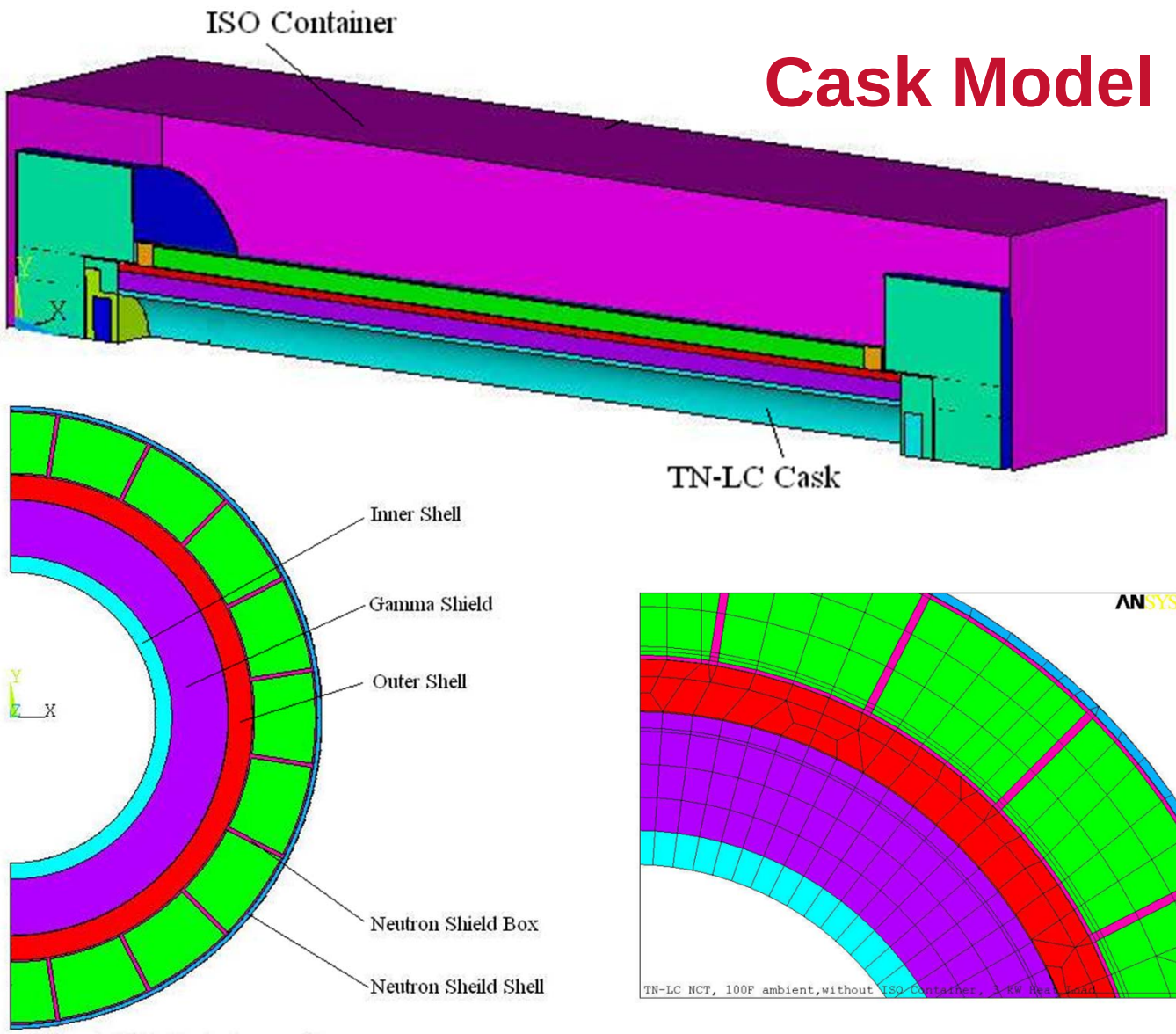

Basket Models

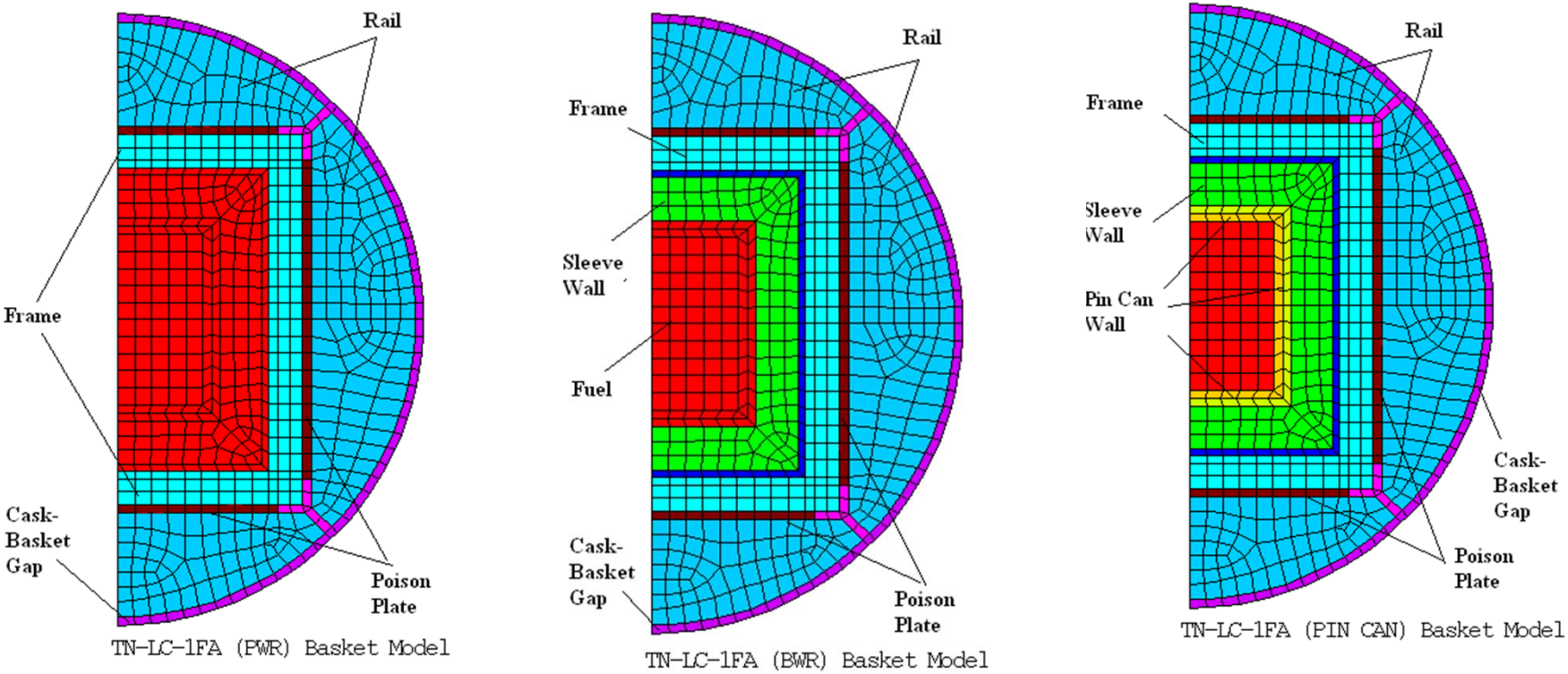

Thermal Evaluations

- **Thermal Evaluations for TN-LC Transport Cask, HAC**
  - **3D ANSYS Model**
  - **Bounding case from NCT is analyzed for HAC**
  - **Homogenized content are considered for transient runs**
  - **HAC conditions**
    - Evaluations performed without ISO container
    - Impact limiters deformed due to free drop (uniform deformation is considered)
    - Part of the impact limiter shell (worst condition discussed) is removed due to puncture
    - Fire emissivity of 1.0 is considered
    - Resin is assumed disintegrated after fire
  - **Maximum cask inner shell temperature is used as boundary condition to evaluate thermal performance of the contents**

Cask Model HAC

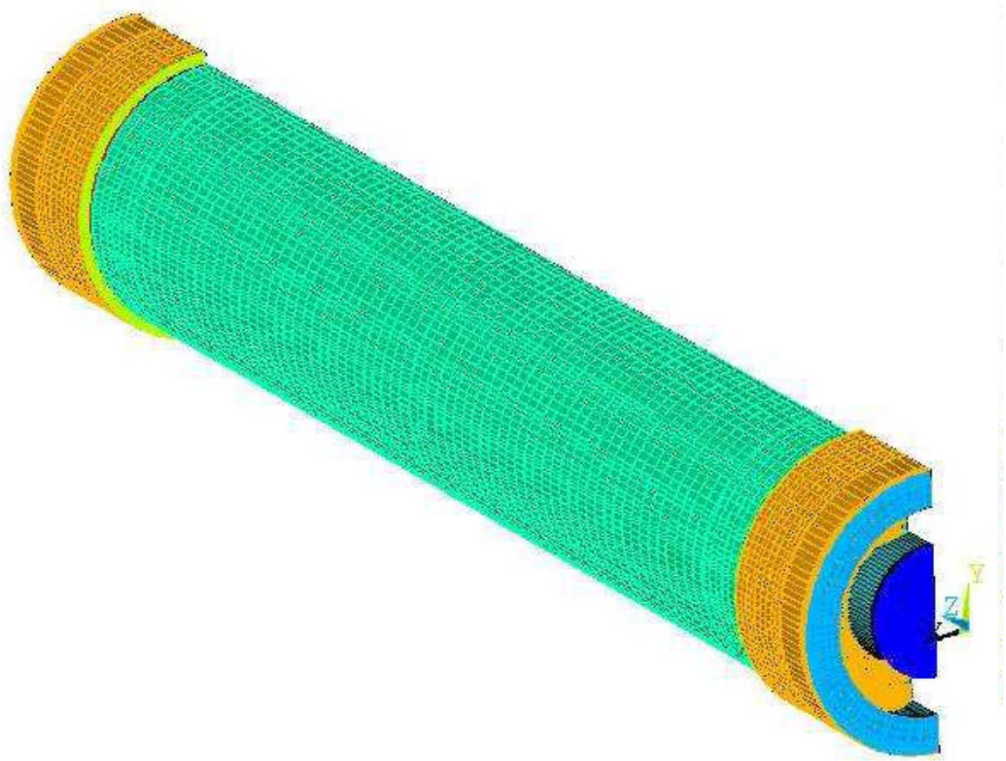

TN-LC TC NON ISO,PWR 3 kW, HAC, TOP IL Punctured

Thermal Evaluation

- **Thermal Evaluations for TN-LC Baskets, Loading/Unloading**
  - **Wet loading is bounded by the NCT**
    - Helium is used as the medium to replace water during draining
    - No impact limiter is attached to the TC during vacuum drying
    - cask body segments beyond the neutron shield are open to environment
  - **Wet unloading (Reflooding)**
    - TC pressure is monitored to control the flow rate of the flood water
    - The maximum cladding temperature during unloading operation is bounded by the maximum fuel cladding temperature for vacuum drying operation
  - **Dry loading/unloading**
    - Performed for research reactor fuels and fuel pins
    - TC inner shell temperatures from the TN-LC TC model without ISO container are used
    - The properties of air are used for backfill gas

Preliminary Results

- **NCT, Cask components**
  - **100°F ambient with insolation and 3 kW heat load**

Component	T_{max} (°F) With ISO Container	T_{max} (°F) Without ISO Container	Limit (°F)
Inner Shell	239	204	---
Gamma Shield	237	203	621
Cask Lid	203	171	---
Bottom flange	186	156	---
Resin	216	179	320
Wood	201	169	320
Seal	205	173	400

Preliminary Results

- **NCT, Basket Components / Fuel Assembly**

Component	T_{max} (°F) Research Reactor Fuels	Limit (°F)	T_{max} (°F) Commercial Fuels	Limit (°F)
Fuel Cladding	266	400	543	752
Tube/Bucket/Pin Can	255	---	379	---
Tube wrap/Outer Plate/Sleeve wall	239	---	318	---
Basket Plate/Frame	---	---	277	---
Basket Shell/Rail	231	---	268	---

Preliminary Results

- **HAC, Cask Components**

Component	T_{max} (°F) Transient	Time (hr) Transient	T_{max} (°F) Steady-State (Cool-down)	Limit (°F)
Inner Shell	445	1.11	253	---
Gamma Shield	558	0.5	252	621
Cask Lid	596	1.0	275	---
Bottom flange	353	0.5	229	---
Seal	449	1.11	271	400 / 482

Preliminary Results

- **HAC, Basket Components / Fuel Assembly**

Component	T_{max} (°F)	Limit (°F)
Fuel Cladding	694	1058
Tube/Bucket/Pin Can	551	---
Tube wrap/Outer Plate/Sleeve wall	507	---
Basket Plate/Frame	507	---
Basket Shell/Rail	469	---

Preliminary Results

- **Dry loading/unloading**

Component	T_{max} (°F) Research Reactor Fuels	Limit (°F)	T_{max} (°F) Commercial Fuels	Limit (°F)
Fuel Cladding	320	400	720	752
Tube/Bucket/Pin Can	309	---	476	---
Tube wrap/Outer Plate/Sleeve wall	---	---	383	---
Basket Plate/Frame	281	---	309	---
Basket Shell/Rail	225	---	274	---

Preliminary Results

NCT Within ISO Container

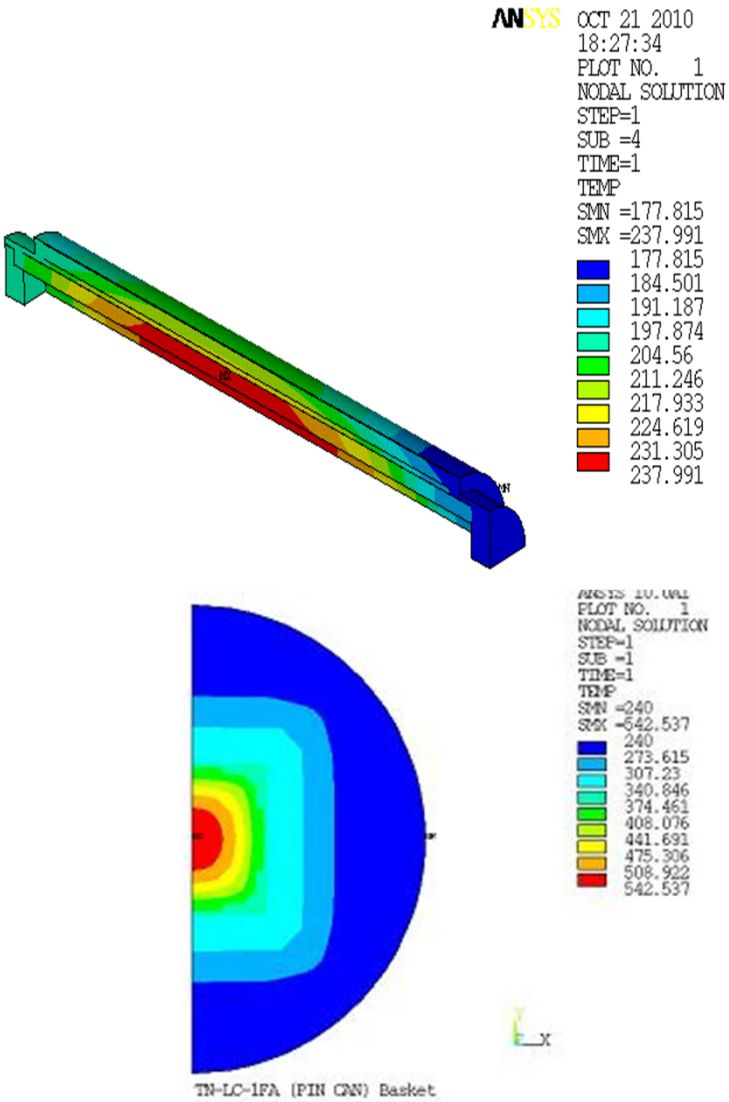

NCT Without ISO Container

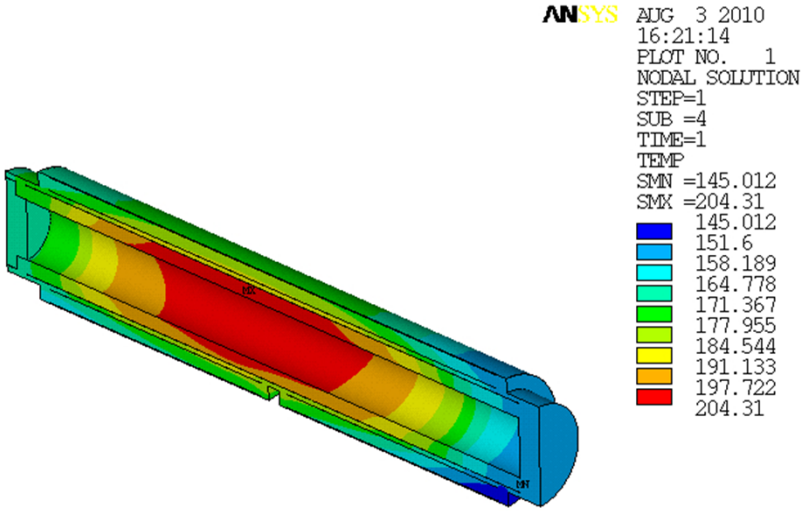

Preliminary Results

- **HAC**

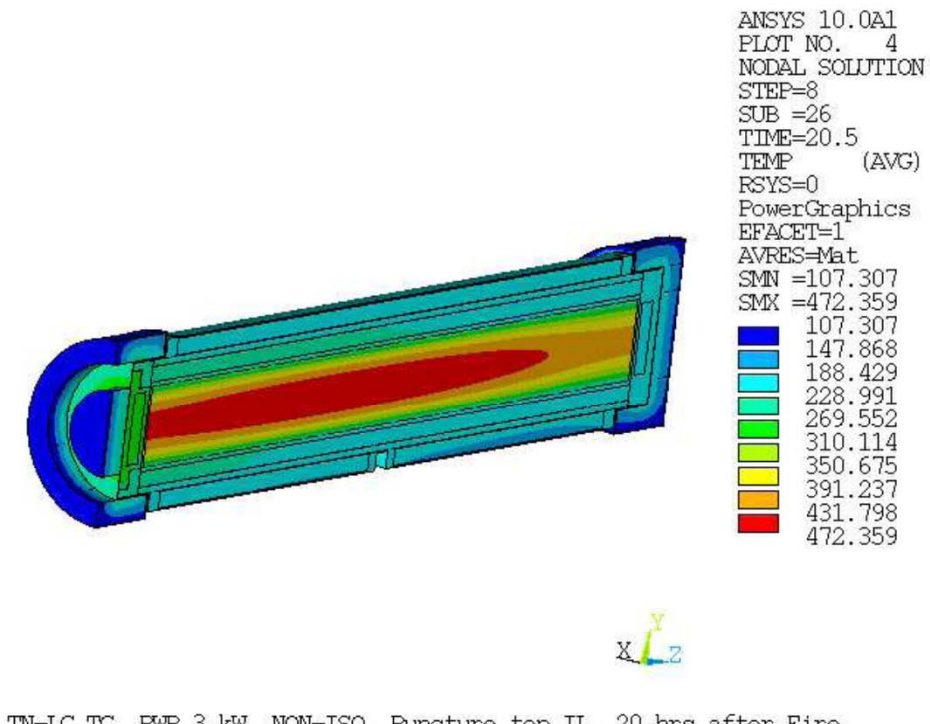

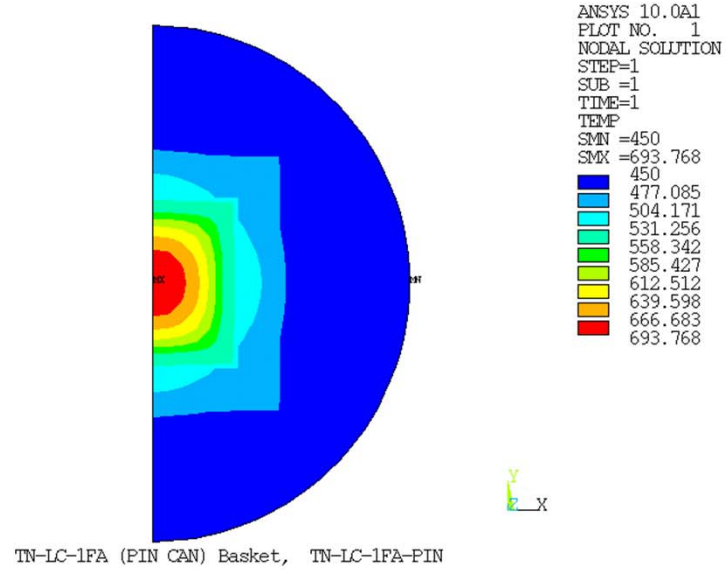

Preliminary Results

- **HAC**

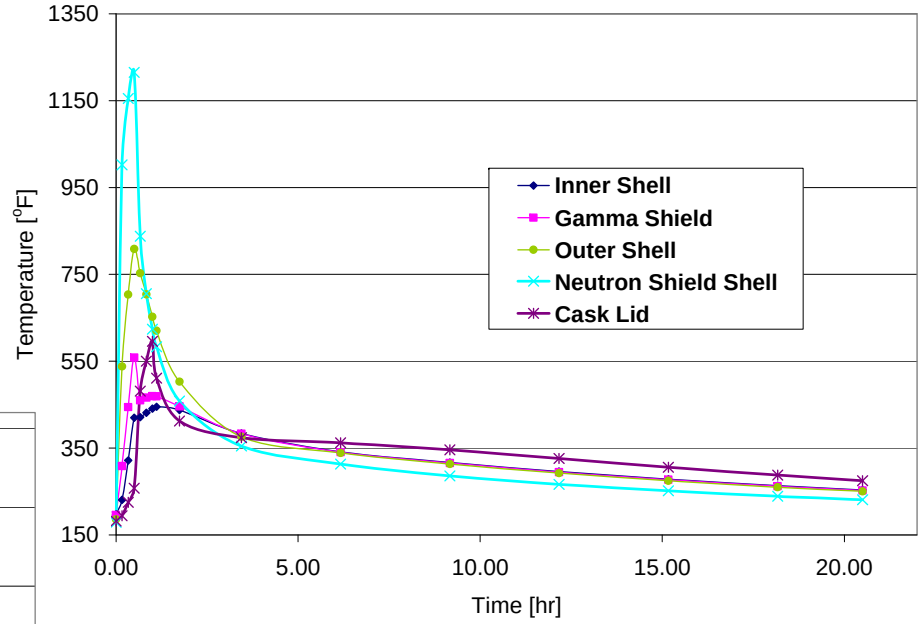

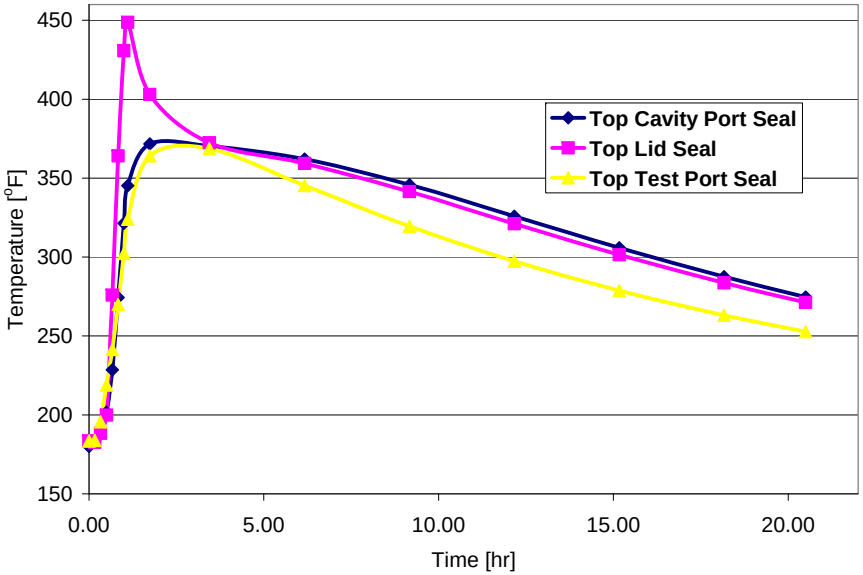

TN-LC Transport Cask

Shielding Evaluation

March 30, 2011

Transnuclear Inc.

AREVA

TN-LC Shielding Analysis

- Safety Analysis Overview
- Shielding Methodology
  - Shielding Materials
  - Computer Codes
  - Response Functions
  - Fuel Qualification
  - Decay Heat Calculations
  - Source Terms for Shielding
  - Shielding Calculations
- Results

AREVA

Safety Analysis Overview

- Shielding Analysis performed for two types of payload
- Research reactor spent fuel payload (RRF) – Three fuel qualification tables (FQTs) and three dose rate tables are generated
- Commercial LWR spent fuel payload (LWR) – Seven different FQTs and one combined dose rate table are generated

AREVA

Safety Analysis Overview

- Shielding Analysis performed in a three-step process
- First Step–Response Function Calculations–Calculated for all of the payloads that are authorized for Transportation in the TN-LC (except when bounding parameters are employed for shielding)
- Second Step–Fuel Qualification for Shielding–Performed for the various basket types to determine Burnup, Enrichment and Cooling Time (BECT) combinations for spent fuel contents
- Third Step–Shielding Evaluation–Performed with bounding source terms for NCT and HAC to meet Part 71 limits

AREVA

Shielding Materials

Parameter / Methodology Description	References Reviewed by the NRC
DSC / Basket / Cask Materials except neutron shielding modeled using SCALE Standard Composition Library	Identical to the materials / composition utilized in the MP197 HB Transportation Cask
Neutron Shielding Resin	Similar to the neutron shielding material in the MP197 HB Transportation Cask

AREVA

Computer Codes

Parameter / Methodology Description	Implementation in TN-LC Analysis
Source Term Calculations including calculation of decay heat for RRF Assemblies	TRITON (2D Depletion)
Source Term Calculations including calculation of decay heat for LWR Assemblies	SAS2H / ORIGEN-S
Shielding Evaluation / Dose Rate Calculation including Response Function Calculation	MCNP5

AREVA

Response Functions

- Response Functions are essentially "source-to-dose" conversion factors for a given shielding configuration
- Response Function is the dose rate at a particular location due to a source of 1 particle/second for a given shielding configuration

Parameter / Methodology Description	References Reviewed by the NRC
Response Function Methodology / Approach	Standardized NUHOMS® System (CoC-1004) for Storage, MP197HB Transportation Cask

AREVA

Response Functions

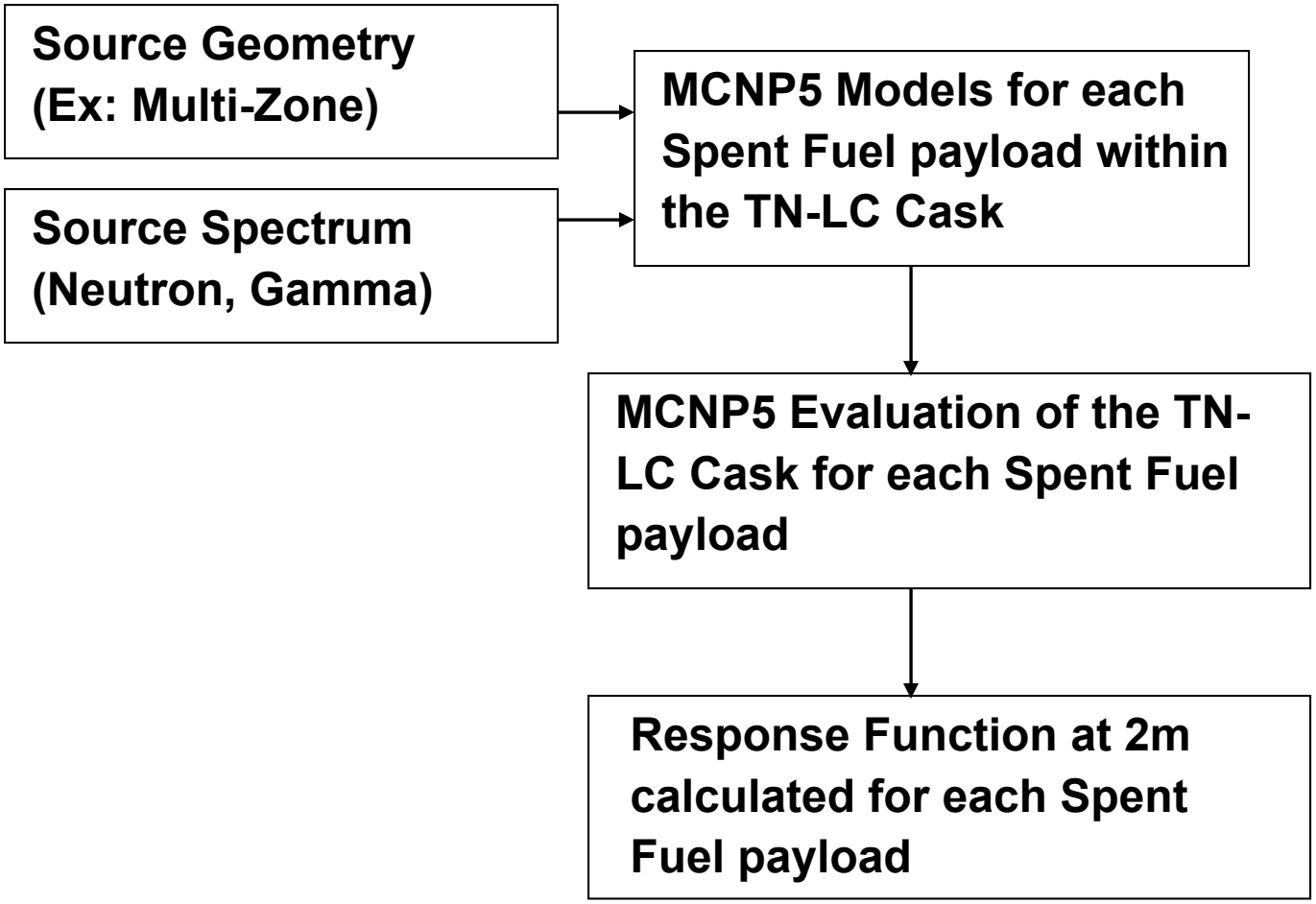

AREVA

Response Functions

- MCNP5 Version 1.40 computer code with ENDF/B-VI cross-section library utilized for response function calculation
- Fuel, Basket and Cask geometry modeled in Fine Detail
- Spectrum from TRITON calculations utilized for neutrons and secondary gamma response function calculations for RRF Assemblies
- MCNP5 built-in Cm-244 spectrum utilized for neutrons and secondary gamma response function calculations for LWR Assemblies
- All gamma energy groups utilized for primary gamma response functions; however, 12 energy groups (0.80 to 10.0 MeV) provided non-zero contributions to the response functions

AREVA

Response Functions

- Response functions calculated at 2m at the midplane of the active fuel length
- This dose point is selected because it generally represents the bounding dose point–for Part 71 dose rate limits compliance

AREVA

MCNP Model for Response Functions

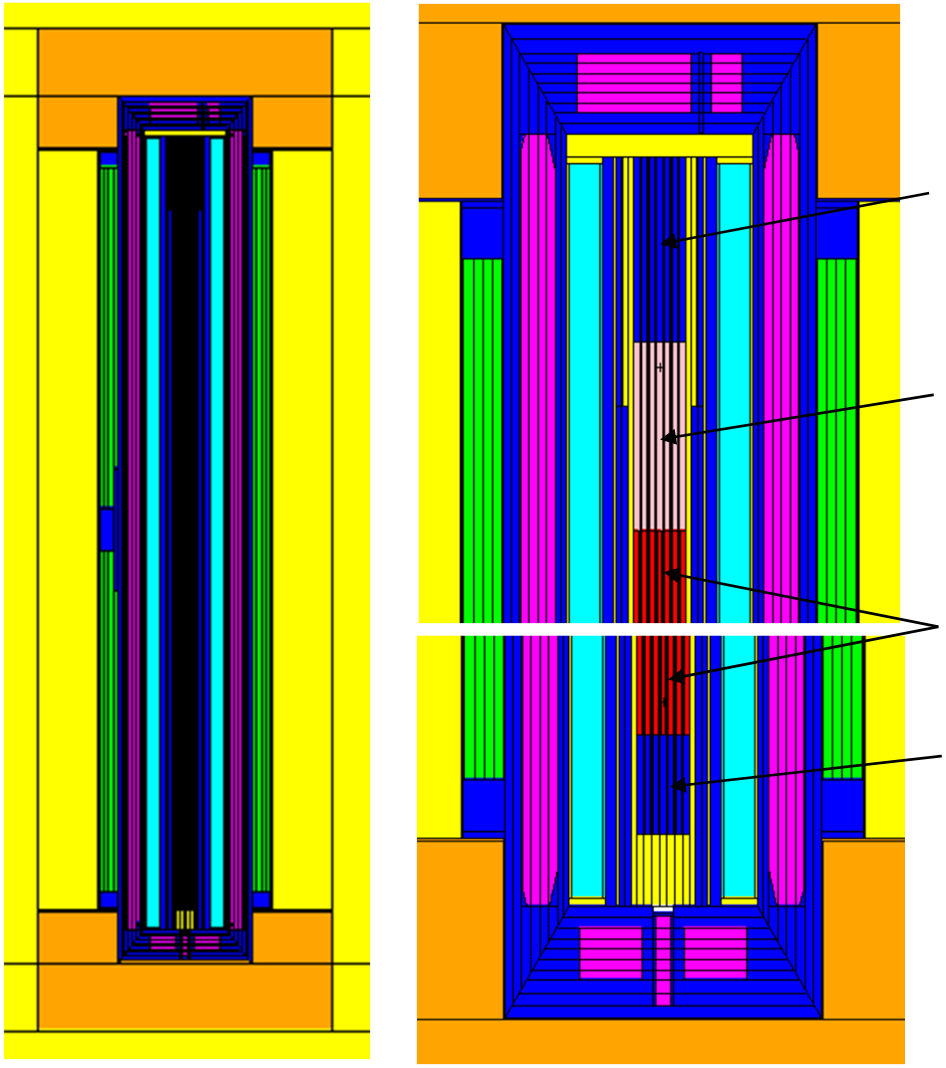

Fuel Qualification

- Spent Fuel may have a variety of initial enrichments, burnups, and cooling times. For each bounding fuel assembly and rod type, a number of depletion cases are developed over a range of initial enrichments and burnups. The cooling time for each burnup and enrichment combination is selected to meet both decay heat and dose rate limits. This matrix of burnup, enrichment, and cooling time is called a "fuel qualification table" (FQT).

AREVA

Fuel Qualification

- **Fuel qualification is a process of determining the acceptable combinations of BECT to ensure that the resulting dose rates for these combinations meet applicable Part 71 limits for shielding**

Parameter / Methodology Description	**References Reviewed by the NRC**
Fuel Qualification Methodology / Approach	Standardized NUHOMS® System (CoC-1004), MP197HB Cask

AREVA

Fuel Qualification

- An Example Fuel Qualification Table is shown below
- The minimum cooling times (in years) as a function of burnup and enrichment are shown in the Table

	50	7.0	7.0	7.0	7.0	7.0	7.0	7.0	7.0	6.5	6.0	6.0	6.0	6.0	6.0	6.0	6.0
	51	7.5	7.5	7.0	7.0	7.0	7.0	7.0	7.0	7.0	7.0	6.5	6.0	6.0	6.0	6.0	6.0
	52	7.5	7.5	7.5	7.5	7.5	7.5	7.5	7.5	7.0	7.0	6.5	6.0	6.0	6.0	6.0	6.0
	53	8.0	7.5	7.5	7.5	7.5	7.5	7.5	7.5	7.5	7.5	7.5	7.0	6.5	6.0	6.0	6.0
	54	9.0	8.0	8.0	8.0	8.0	8.0	8.0	7.5	7.5	7.5	7.5	7.5	7.5	6.5	6.0	6.0
BURNUP (GWD/MTU)	55	10.5	9.5	8.5	8.0	8.0	8.0	8.0	8.0	8.0	8.0	7.5	7.5	7.5	7.0	6.0	6.0
	56	11.0	10.5	9.5	9.0	8.5	8.5	8.5	8.0	8.0	8.0	8.0	8.0	7.5	7.5	7.5	7.0
	57	12.0	11.0	11.0	10.0	9.0	8.5	8.5	8.5	8.5	8.5	8.5	8.5	8.5	8.0	8.0	7.0
	58	13.5	12.5	11.5	10.5	10.5	9.5	9.0	9.0	8.5	8.5	8.5	8.5	8.5	8.5	8.0	7.5
	59	14.5	13.5	12.5	12.0	11.0	10.5	9.5	9.0	9.0	9.0	9.0	9.0	9.0	9.0	9.0	8.5
	60	16.0	15.0	14.0	13.0	12.0	11.0	11.0	10.0	9.5	9.5	9.5	9.0	9.0	9.0	9.0	9.0
	61	17.0	16.0	15.0	14.5	13.5	12.5	11.5	10.5	10.5	9.5	9.5	9.5	9.5	9.5	9.5	9.5
	62	18.5	17.5	16.5	15.5	14.5	13.5	13.0	12.0	11.0	11.0	10.0	10.0	10.0	10.0	9.5	9.5
		3.5	3.6	3.7	3.8	3.9	4.0	4.1	4.2	4.3	4.4	4.5	4.6	4.7	4.8	4.9	5.0
		ENRICHMENT (Wt. % U-235)															

AREVA

Fuel Qualification

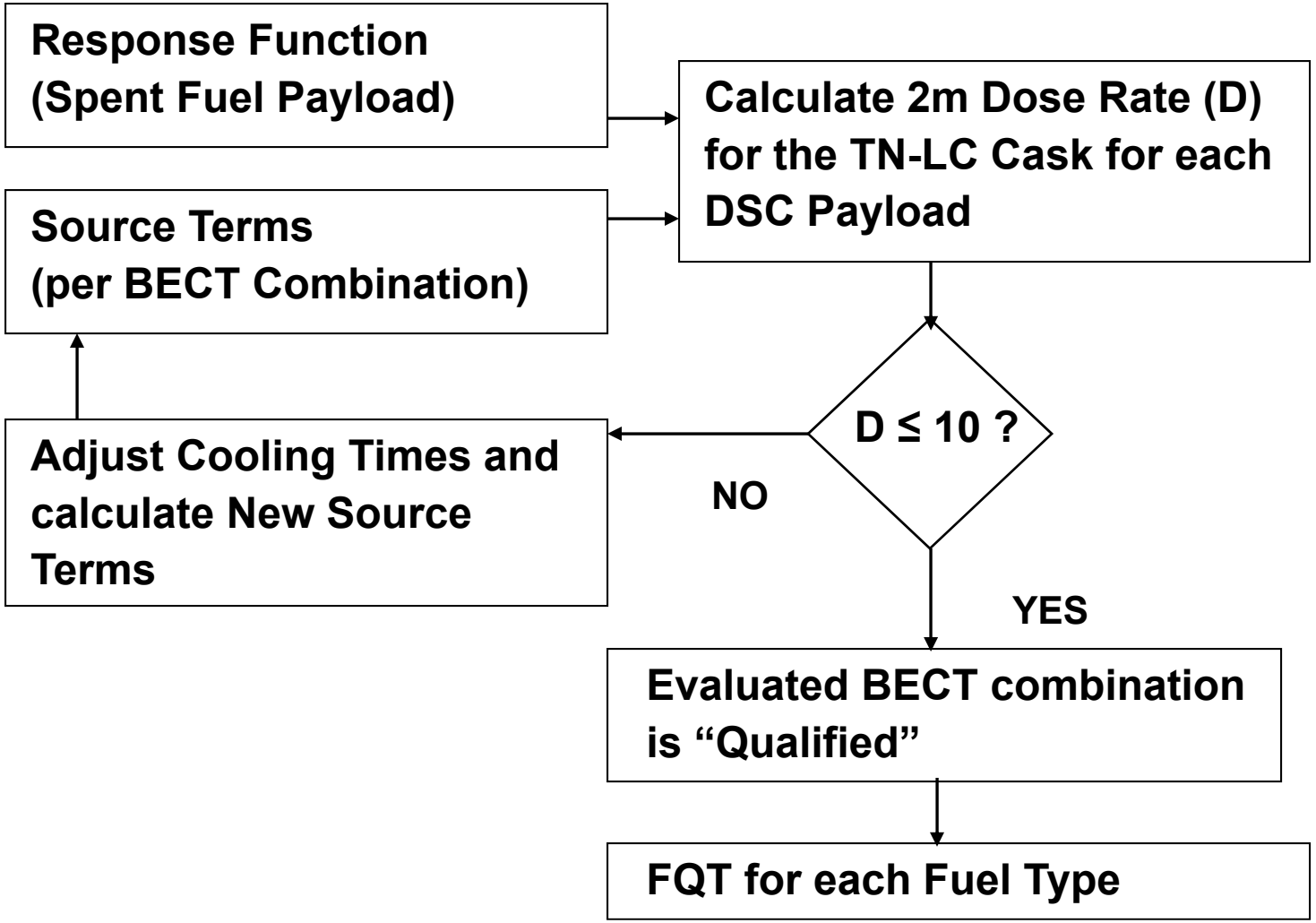

AREVA

Fuel Qualification

- Fuel Qualification Tables (FQTs) for dose rate compliance are developed for each Fuel Type that shows the minimum cooling time required as a function of burnup and enrichment
- All the cooling times in each FQT ensure that the resulting dose rates are below the part 71 limit of 10 mrem/hour at 2m
- Dose rates for the FQT calculations are obtained from response functions
- Several entries in the FQT result in “calculated dose rates” (from response functions) that are significantly lower than the part 71 limit

AREVA

Fuel Qualification

- SAS2H/ORIGEN-S Modules from the SCALE44 computer code system with the 44 Group ENDF/B-V cross section library utilized to determine source terms for LWR FQTs
- TRITON Module from the SCALE6 computer code system utilized to determine source terms for the RRF FQTs
- The FQTs are based on uniform loading throughout the basket

AREVA

NCT Source Terms for Shielding

- Determination of FQT for shielding for each Spent Fuel payload / basket design ensures that the source term/DSC combination within the TN-LC results in approximately the same dose rates for NCT
- The FQT methodology adjusts cooling times such that the maximum dose rate at 2m is within the part 71 limit
- Therefore only one bounding source term per basket/Spent Fuel Payload configuration is evaluated
- TRITON is utilized to determine the NCT source terms for the RRF assemblies
- SAS2H is utilized to determine the NCT source terms for the LWR assemblies

AREVA

HAC Source Terms for Shielding

- The HAC source term/basket payload configurations, unlike the NCT source term/basket payload configurations, are not "equivalent"
- The source term/basket payload configurations for HAC are based on those that maximize the dose contribution from neutron and capture gamma and are evaluated using Response Functions
- HAC results for the TN-LC Transport Package also validate the same conclusions regarding dose rate contribution
- TRITON is utilized to determine the HAC source terms for the RRF assemblies
- SAS2H is utilized to determine the HAC source terms for the LWR assemblies

AREVA

Shielding Calculations for NCT

- The NCT shielding calculations are performed for various baskets within the TN-LC cask using MCNP5 Code
- The cask geometry is modeled in full 3D including Impact Limiters (ILs) and Trunnion Plugs (TPs)
- Separate models are employed for neutron (including secondary gamma) and gamma dose rate calculations
- Spectrum from TRITON utilized for neutrons and secondary gamma dose rate calculations for RRF Assemblies
- MCNP5 built-in Cm-244 spectrum utilized for neutrons and secondary gamma dose rate calculations for LWR Assemblies

AREVA

Shielding Calculations for NCT

- The 18-energy group gamma spectrum from SCALE is utilized for primary gamma dose rate calculations – TRITON for RRF assemblies and SAS2H for LWR assemblies
- Sufficient Axial and Angular mesh tallies ensure that the maximum dose rates are determined

AREVA

Shielding Calculations for HAC

- The HAC calculations are performed for various baskets within the TN-LC cask using MCNP5 Code
- The MCNP5 models and methods are identical to those of the NCT calculations *except* for source terms and cask geometry – the geometry changes as described below
  - Axial and Radial Lead Slump calculated by structural analysis accounted in Models
  - The wood materials in the Impact Limiters are conservatively replaced with air
  - Complete loss of neutron shielding resin

AREVA

Results

- The bounding dose rate for Part 71 compliance for the TN-LC is the 2m NCT dose rate.
- All calculated dose rates meet the applicable Part 71 limits for NCT and HAC

AREVA

TN-LC Transport Cask

Criticality Evaluation

March 30, 2011

Transnuclear Inc.

AREVA

TN-LC Criticality Analysis

- Safety Analysis Overview
- Baskets and Spent Fuel Payloads
- Criticality Analysis Methodology
  - Computer Codes and Models
  - Criticality Analysis
  - Benchmarking and USL

AREVA

Safety Analysis Overview

- Criticality Analysis is based on two types of Spent Fuel Payloads
- Research Reactor Spent Fuel Assemblies (RRF) – The spent fuel assemblies are modeled as fresh fuel (un-irradiated, no burnup credit) in the criticality analysis.
- Light Water Reactor Spent Fuel Assemblies (LWR)–The spent fuel assemblies are modeled as fresh fuel (un-irradiated, no burnup credit) in the criticality analysis.

AREVA

Baskets and Spent Fuel Payloads

Spent Fuel Payload	Fuel Configurations
▶Three Classes of RRFs ▶Each Class of RRF has its own Basket Design	HEU Fuel in various forms including High Burnup Fuel
▶LWR Assemblies and Pins	Commercial Reactor Rodded Fuel including High Burnup Fuel

AREVA

Computer Codes and Models
(For RRF Assemblies)

Parameter / Methodology Description	Implementation in the TN-LC Analysis
Computer Code / Cross Section Library for Criticality Analysis	MCNP5 Monte Carlo Code Using the Continuous Energy ENDF/B-VI and ENDF/B-V Libraries
Analysis Models	3D model of the Basket with Fuel in the TN-LC Cask

AREVA

Computer Codes and Models
(For LWR Assemblies)

Parameter / Methodology Description	Implementation in the TN-LC Analysis
Computer Code / Cross Section Library for Criticality Analysis	CSAS5 Module of the SCALE6 Code Using the 44-Group ENDF/B-V Library using NITAWL to Calculate the Resonance Cross Sections
Analysis Models	3D model of the Basket with Fuel in the TN-LC Cask

AREVA

Criticality Analysis – RRF Assemblies

- The most reactive RRF fuel designs at NCT and HAC are evaluated
- NCT and HAC configurations include fully flooded basket and fuel assembly at its maximum reactivity including fuel reconfiguration
- Sensitivity calculations are performed on a number of parameters including fuel compositions and fuel geometry
- Fixed poison is not generally required for criticality control

AREVA

Criticality Analysis – RRF Assemblies

- RRF Assemblies are qualified based on geometry – plates, rodlets, lattices etc
- Fuel loading limits for each RRF configuration are also determined – eg: maximum allowable Uranium loading per plate

AREVA

Criticality Analysis – RRF Assemblies

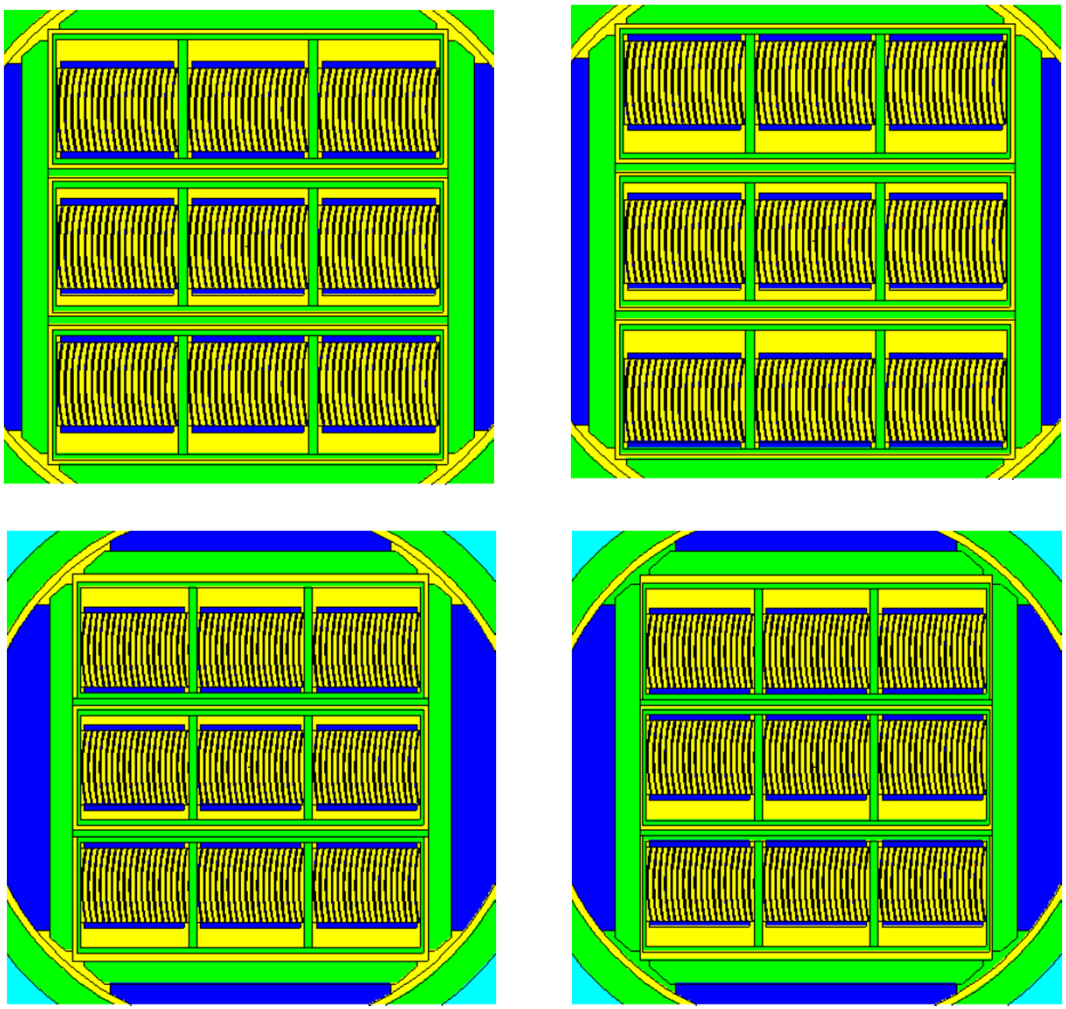

Criticality Analysis – LWR Assemblies

- The most reactive PWR and BWR fuel designs at NCT and HAC are evaluated
- The most reactive configuration for fuel rods also evaluated separately
- NCT configuration includes fully flooded basket and intact fuel assembly
- HAC configuration includes fully flooded basket and fuel assembly at its maximum reactivity including fuel reconfiguration
- Fixed poison is employed for criticality control
- Maximum enrichment is 5.00 wt. % U-235

AREVA

Criticality Analysis – LWR Assemblies

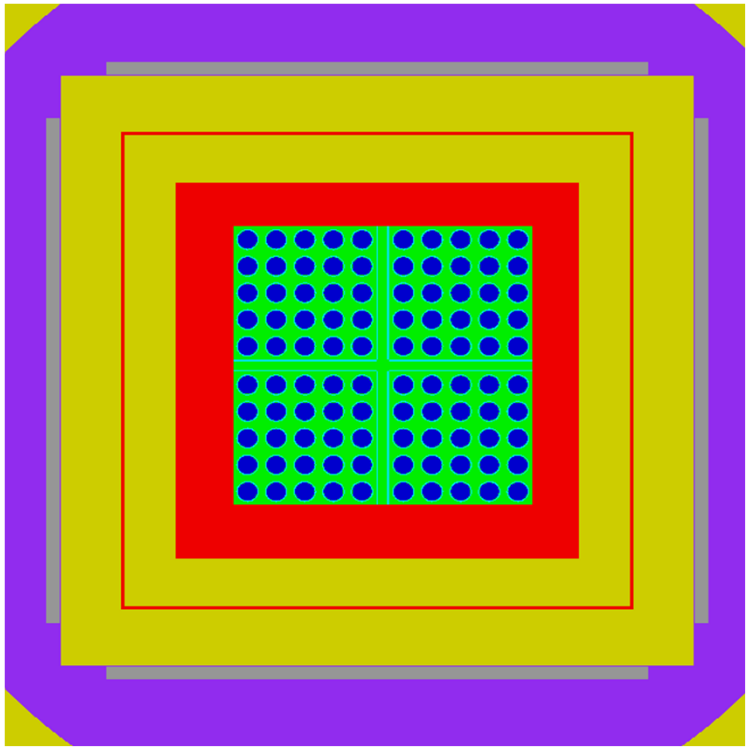

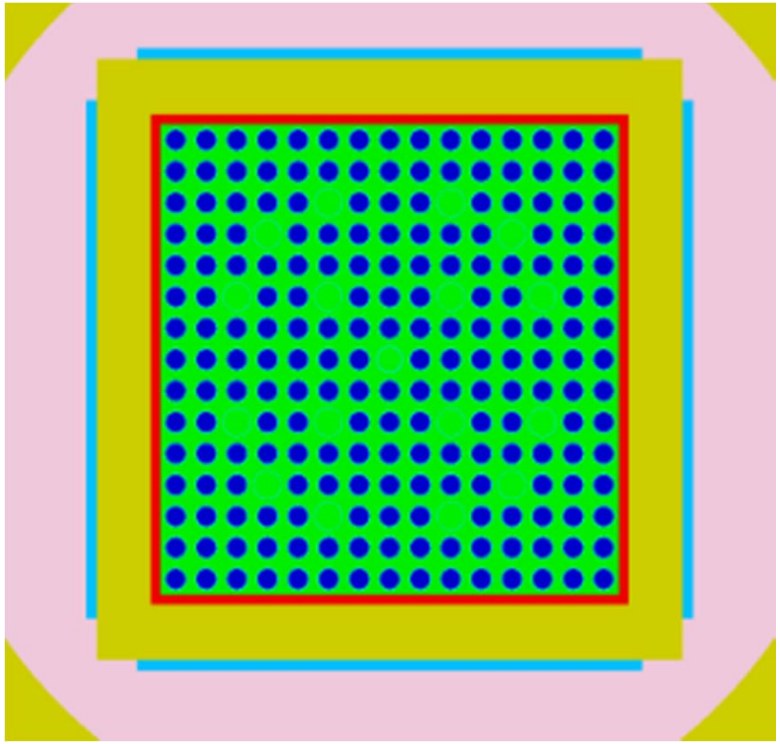

Criticality Benchmarks and USL
(For RRF Assemblies)

- Criticality Experiments from the *Handbook of Evaluated Criticality Safety Benchmark Experiments*
- Evaluated Parameters include Enrichment, Pitch, H/X Ratio, Water to Fuel Volume Ratio and EALF
- USLSTATS-ORNL employed to determine Functions using USL-1 (Method 1)
- Minimum USL from the parametric evaluations utilized to set subcriticality limits – Separate USL for Each Class is determined

AREVA

Criticality Benchmarks and USL
(For LWR Assemblies)

- Benchmark Experiments from NUREG/CR-6361
- 118 Experiments evaluated
- Evaluated Parameters include Enrichment, Pitch, Water to Fuel Volume Ratio and EALF
- USLSTATS (from SCALE6) employed to determine Functions using USL-1 (Method 1)
- Minimum USL from the parametric evaluations utilized to set subcriticality limits

AREVA