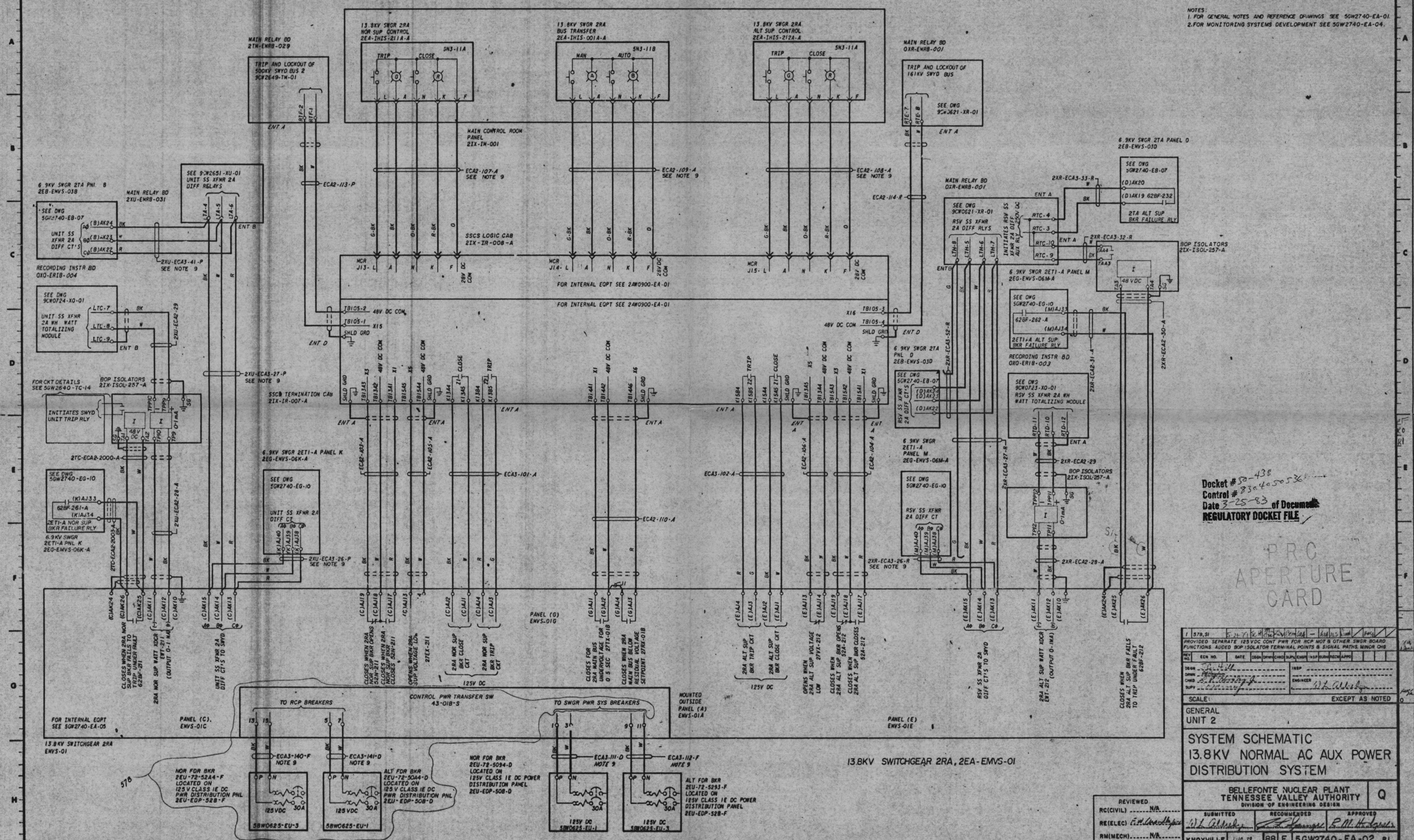

NOTES:
1. FOR GENERAL NOTES AND REFERENCE DRAWINGS SEE 5GW2740-EA-01.
2. FOR MONITORING SYSTEMS DEVELOPMENT SEE 5GW2740-EA-04.
13.8KV SWGR 2RA NOR SUP CONTROL 2EA-IHIS-211A-A
13.8KV SWGR 2RA BUS TRANSFER 2EA-IHIS-001A-A
13.8KV SWGR 2RA ALT SUP CONTROL 2EA-IHIS-212A-A
MAIN RELAY BD 2TM-EMRB-029
TRIP AND LOCKOUT OF 500KV SWYD BUS 2 9CW2649-TM-01
MAIN RELAY BD OXR-EMRB-001
TRIP AND LOCKOUT OF 161KV SWYD BUS
MAIN CONTROL ROOM PANEL 2IX-IM-001
SSCS LOGIC CAB 2IX-IR-008-A
FOR INTERNAL EQPT SEE 2AW0900-EA-01
6.9KV SWGR 2TA PNL B 2EB-EMVS-038
MAIN RELAY BD 2XU-EMRB-031
RECORDING INSTR BD OXO-ERIB-004
6.9KV SWGR 2TA PANEL D 2EB-EMVS-030
6.9KV SWGR 2ET1-A PANEL M 2EG-EMVS-06M-A
BOP ISOLATORS 2IX-ISOL-257-A
RECORDING INSTR BD OXO-ERIB-003
SSCS TERMINATION CAB 2IX-IR-007-A
6.9KV SWGR 2ET1-A PANEL K 2EG-EMVS-06K-A
6.9KV SWGR 2ET1-A PANEL M 2EG-EMVS-06M-A
PANEL (G) EMVS-01G
PANEL (C) EMVS-01C
PANEL (E) EMVS-01E
CONTROL PWR TRANSFER SW 43-01B-S
TO RCP BREAKERS
TO SWGR PWR SYS BREAKERS
MOUNTED OUTSIDE PANEL (A) EMVS-01A
FOR INTERNAL EQPT SEE 5GW2740-EA-05
13.8KV SWITCHGEAR 2RA EMVS-01
13.8KV SWITCHGEAR 2RA, 2EA-EMVS-01
NOR FDR BKR 2EU-72-52A4-F LOCATED ON 125V CLASS 1E DC PWR DISTRIBUTION PNL 2EU-EDP-52B-F
ALT FDR BKR 2EU-72-50A4-D LOCATED ON 125V CLASS 1E DC PWR DISTRIBUTION PNL 2EU-EDP-50B-D
NOR FDR BKR 2EU-72-5094-D LOCATED ON 125V CLASS 1E DC POWER DISTRIBUTION PANEL 2EU-EDP-50B-D
ALT FDR BKR 2EU-72-5293-F LOCATED ON 125V CLASS 1E DC POWER DISTRIBUTION PANEL 2EU-EDP-52B-F
Docket # 50-438
Control # 8304050536
Date 3-25-83 of Document
REGULATORY DOCKET FILE
PRC APERTURE CARD
PROVIDED SEPARATE 125VDC CONT PWR FOR RCP MOT & OTHER SWGR BOARD FUNCTIONS. ADDED BOP ISOLATOR TERMINAL POINTS & SIGNAL PATHS. MINOR CHG
SCALE: EXCEPT AS NOTED
GENERAL
UNIT 2
SYSTEM SCHEMATIC
13.8KV NORMAL AC AUX POWER DISTRIBUTION SYSTEM
BELLEFONTE NUCLEAR PLANT
TENNESSEE VALLEY AUTHORITY
DIVISION OF ENGINEERING DESIGN
Q
SUBMITTED
RECOMMENDED
APPROVED
KNOXVILLE
88 E 5GW2740-EA-02 R1
RECORD DRAWING AS CONSTRUCTED
REVIEWED
RC(CIVIL) N/A
RE(ELEC)
RM(MECH) N/A