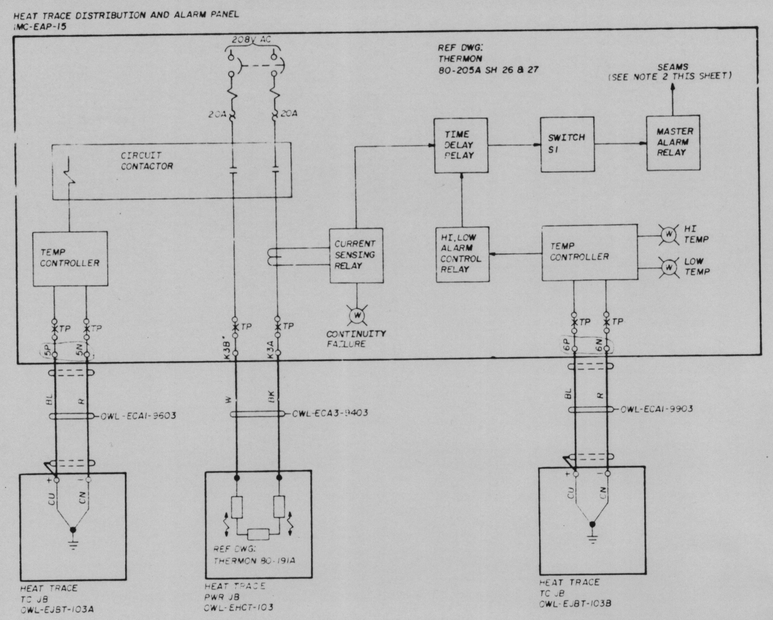

HEAT TRACE CKT, OWL-EHCT-103, VENDOR CKT 46

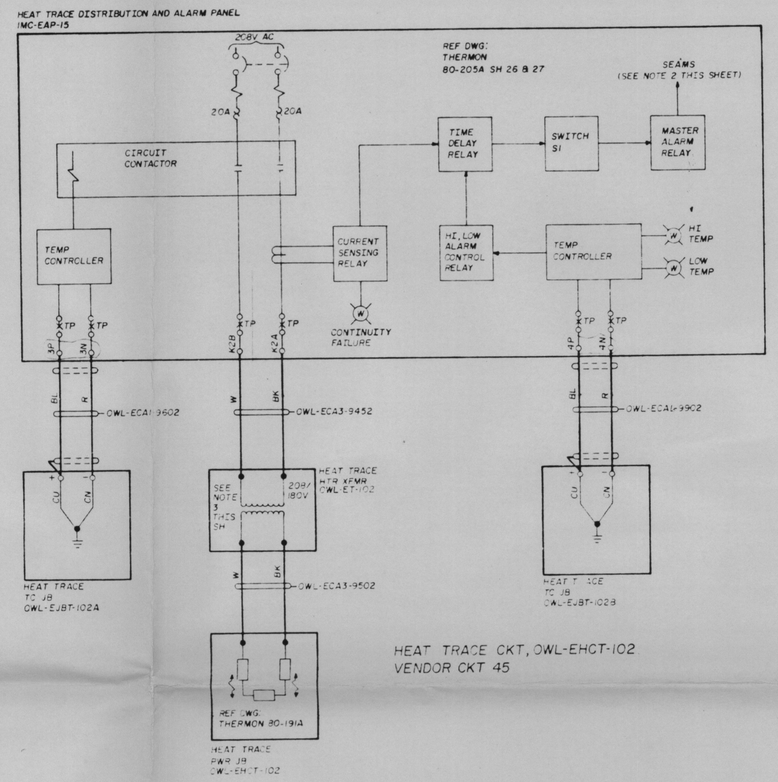

HEAT TRACE CKT, OWL-EHCT-102 VENDOR CKT 45

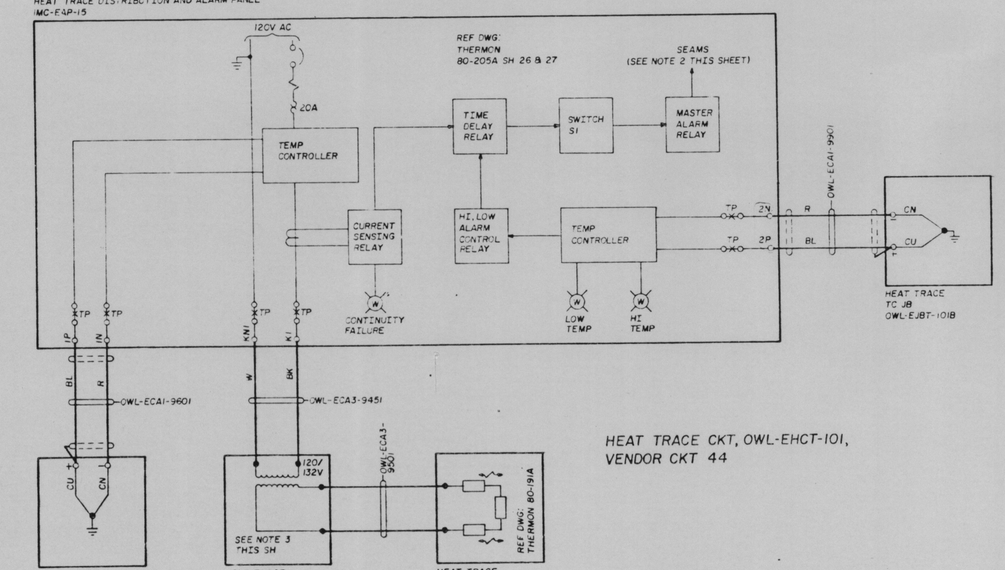

HEAT TRACE CKT, OWL-EHCT-101, VENDOR CKT 44

NOTES:
1. FOR GENERAL NOTES AND SYMBOLS SEE 5GW0740-WD-01
2. LOSS OF HEATER CONTINUITY, HIGH AND LOW TEMPERATURE, TEST MODE AND UNDER VOLTAGE IS MONITORED BY SEAMS AND IS SHOWN ON 5GW1740-MC-07
3. TRANSFORMER CONNECTIONS ARE PIGTAILS AND ARE IDENTIFIED ONLY BY THE VOLTAGE RATING SHOWN.

SYMBOLS
TP - TEST POINT (DISCONNECTING TERMINAL BLOCK)

Docket # 50-438
Control # 830405 0536
Date 3-25-83 of Document:
REGULATORY DOCKET FILE

PRC APERTURE CARD

REV NO	ECN NO.	DATE	DSGN	DRWN	CHKD	SUPV	ENGR	NSP	SUBM	RECM	APPR
1	S1										

CHANGED PNL TO TERMINATIONS

DSGN R. D. Edgton
DRWN T. L. Spencer
CHKD T. B. Dunnie
SUPV W. R. Tatum
INSP
ENGINEER

GENERAL
UNITS 1 & 2

SYSTEM SCHEMATIC
WASTE DISPOSAL
SYSTEM

BELLEFONTE NUCLEAR PLANT
TENNESSEE VALLEY AUTHORITY
DIVISION OF ENGINEERING DESIGN

N

SUBMITTED | RECOMMENDED | APPROVED

INSPECTED AND APPROVED FOR ISSUE

KNOXVILLE | 88 | E | 5GW0740-WD-36 | R1

RECORD DRAWING AS CONSTRUCTED