DESIGN CONTROL DOCUMENT FOR THE
US-APWR
Tier 1

MUAP- DC020
REVISION 3
MARCH 2011

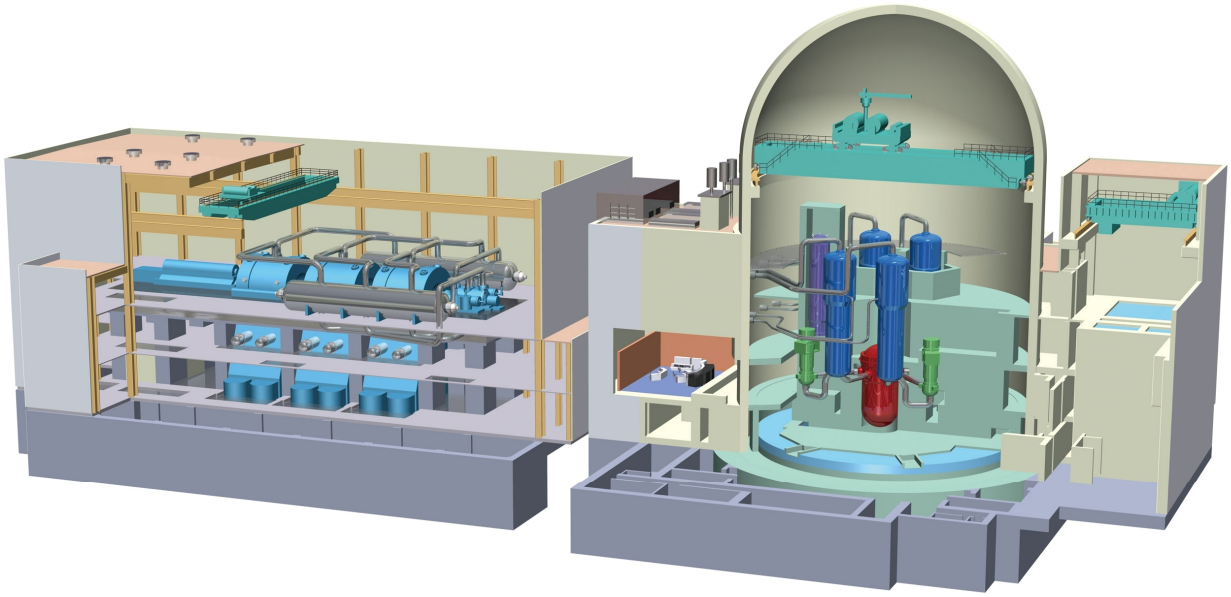

MITSUBISHI HEAVY INDUSTRIES, LTD.

©2011
Mitsubishi Heavy Industries, Ltd.
All Rights Reserved

© 2011

MITSUBISHI HEAVY INDUSTRIES, LTD.

All Rights Reserved

This document has been prepared by Mitsubishi Heavy Industries, Ltd. ("MHI") in connection with the U.S. Nuclear Regulatory Commission's ("NRC") licensing review of MHI's US-APWR nuclear power plant design. No right to disclose, use or copy any of the information in this document, other than by the NRC and its contractors in support of the licensing review of the US-APWR, is authorized without the express written permission of MHI.

This document contains technology information and intellectual property relating to the US-APWR and it is delivered to the NRC on the express condition that it not be disclosed, copied or reproduced in whole or in part, or used for the benefit of anyone other than MHI without the express written permission of MHI, except as set forth in the previous paragraph.

This document is protected by the laws of Japan, U.S. copyright law, international treaties and conventions, and the applicable laws of any country where it is being used.

Mitsubishi Heavy Industries, Ltd.

16-5, Konan 2-chome, Minato-ku

Tokyo 108-8215 Japan

CONTENTS

Page

1.0 INTRODUCTION 1-1
1.1 DEFINITIONS 1-1
1.2 GENERAL PROVISIONS 1-3
1.2.1 Treatment of Individual Items 1-3
1.2.2 ITAAC Tables 1-4
1.2.3 Discussion of Matters Related to Operations 1-5
1.2.4 Interpretation of Figures 1-5
1.2.5 Rated Reactor Core Thermal Power 1-5
1.3 FIGURE LEGEND 1-5
1.4 Tag Numbers 1-9
2.0 DESIGN DESCRIPTIONS AND ITAAC 2-1
2.1 SITE PARAMETERS 2.1-1
2.2 STRUCTURAL AND SYSTEMS ENGINEERING 2.2-1
2.2.1 Building Structures Design Description 2.2-1
2.2.2 Protection Against Hazards 2.2-2
2.2.3 System Structural Design 2.2-3
2.2.4 Inspection, Tests, Analyses, and Acceptance Criteria 2.2-4
2.3 PIPING SYSTEMS AND COMPONENTS 2.3-1
2.4 REACTOR SYSTEMS 2.4-1
2.4.1 Reactor System 2.4-1
2.4.2 Reactor Coolant System (RCS) 2.4-11
2.4.3 Loose Parts Monitoring System (LPMS) 2.4-33
2.4.4 Emergency Core Cooling System (ECCS) 2.4-34
2.4.5 Residual Heat Removal System (RHRS) 2.4-61
2.4.6 Chemical and Volume Control System (CVCS) 2.4-80
2.4.7 Reactor Coolant Pressure Boundary Leakage Detection System 2.4-104

CONTENTS (Continued)

Page

2.5 INSTRUMENTATION AND CONTROLS 2.5-1
2.5.1 Reactor Trip System and Engineered Safety Feature Systems 2.5-1
2.5.2 Systems Required for Safe Shutdown 2.5-25
2.5.3 Diverse Actuation System 2.5-31
2.5.4 Information Systems Important to Safety 2.5-40
2.5.5 Control Systems Not Required for Safety 2.5-46
2.5.6 Data Communication Systems 2.5-49
2.6 ELECTRICAL SYSTEMS 2.6-1
2.6.1 AC Electric Power Systems 2.6-1
2.6.2 DC Power Systems 2.6-15
2.6.3 I&C Power Supply Systems 2.6-23
2.6.4 Emergency Power Sources (EPS) 2.6-32
2.6.5 Alternate AC (ACC) Power Source 2.6-47
2.6.6 Plant Lighting Systems 2.6-52
2.6.7 Grounding and Lightning Protection System 2.6-56
2.6.8 Containment Electrical Penetration Assemblies (EPAs) 2.6-58
2.7 PLANT SYSTEMS 2.7-1
2.7.1 Power Generation Systems 2.7-1
2.7.1.1 Turbine Generator (T/G) 2.7-1
2.7.1.2 Main Steam Supply System (MSS) 2.7-5
2.7.1.3 Main Condenser 2.7-23
2.7.1.4 Main Condenser Evacuation System (MCES) 2.7-24
2.7.1.5 Gland Seal System (GSS) 2.7-25
2.7.1.6 Turbine Bypass System (TBS) 2.7-26
2.7.1.7 Circulating Water System (CWS) 2.7-27
2.7.1.8 Condensate Polishing System (CPS) 2.7-28
2.7.1.9 Condensate and Feedwater System (CFS) 2.7-29
2.7.1.10 Steam Generator Blowdown System (SGBDS) 2.7-43
2.7.1.11 Emergency Feedwater System (EFWS) 2.7-54

CONTENTS (Continued)

Page

2.7.1.12 Secondary Side Chemical Injection System (SCIS) 2.7-83
2.7.1.13 Auxiliary Steam Supply System (ASSS) 2.7-84
2.7.2 Compressed Air and Gas Systems (CAGS) 2.7-85
2.7.3 Cooling Water Systems 2.7-86
2.7.3.1 Essential Service Water System (ESWS).....2.7-86
2.7.3.2 Non-Essential Service Water System (Non-ESWS) 2.7-101
2.7.3.3 Component Cooling Water System (CCWS) 2.7-102
2.7.3.4 Turbine Component Cooling Water System 2.7-129
2.7.3.5 Essential Chilled Water System (ECWS).....2.7-130
2.7.3.6 Non-Essential Chilled Water System (non-ECWS).....2.7-149
2.7.4 Radwaste Systems 2.7-153
2.7.4.1 Liquid Waste Management System (LWMS) 2.7-153
2.7.4.2 Gaseous Waste Management System (GWMS) 2.7-157
2.7.4.3 Solid Waste Management System (SWMS) 2.7-160
2.7.5 Heating, Ventilation, and Air Conditioning (HVAC) Systems 2.7-163
2.7.5.1 Main Control Room HVAC System 2.7-163
2.7.5.2 Engineered Safety Features Ventilation Systems (ESFVS) 2.7-176
2.7.5.3 Containment Ventilation System (CVVS).....2.7-206
2.7.5.4 Auxiliary Building Ventilation System (ABVS).....2.7-209
2.7.5.5 Turbine Building Area Ventilation System.....2.7-218
2.7.6 Auxiliary Systems.....2.7-219
2.7.6.1 New Fuel Storage 2.7-219
2.7.6.2 Spent Fuel Storage 2.7-221
2.7.6.3 Spent Fuel Pit Cooling and Purification System 2.7-223
2.7.6.4 Light Load Handling System 2.7-234
2.7.6.5 Overhead Heavy Load Handling System.....2.7-241
2.7.6.6 Process Effluent Radiation Monitoring and Sampling System.....2.7-248
2.7.6.7 Process and Post-accident Sampling System (PSS).....2.7-254

CONTENTS (Continued)

Page

2.7.6.8 Equipment and Floor Drainage Systems 2.7-267
2.7.6.9 Fire Protection System.....2.7-271
2.7.6.10 Communications Systems 2.7-275
2.7.6.11 Condensate Storage Facilities 2.7-278
2.7.6.12 Potable and Sanitary Water Systems (PSWS) 2.7-279
2.7.6.13 Area Radiation and Airborne Radioactivity Monitoring Systems...2.7-280
2.8 RADIATION PROTECTION.....2.8-1
2.9 HUMAN FACTORS ENGINEERING 2.9-1
2.10 EMERGENCY PLANNING 2.10-1
2.11 CONTAINMENT SYSTEMS 2.11-1
2.11.1 Containment Vessel.....2.11-1
2.11.2 Containment Isolation System 2.11-7
2.11.3 Containment Spray System (CSS) 2.11-32
2.11.4 Containment Hydrogen Monitoring and Control System (CHS).....2.11-46
2.12 PHYSICAL SECURITY HARDWARE 2.12-1
2.13 DESIGN RELIABILITY ASSURANCE PROGRAM 2.13-1
2.14 INITIAL TEST PROGRAM 2.14-1
3.0 INTERFACE REQUIREMENTS.....3-1
3.1 DESIGN DESCRIPTION.....3-1
3.2 INTERFACE REQUIREMENTS.....3-1
3.2.1 Ultimate Heat Sink 3-1
3.2.2 Fire Protection System.....3-2
3.2.3 Essential Service Water System.....3-2
3.2.4 Electrical System 3-3

TABLES

Page

Table 2.1-1 Key Site Parameters....2.1-2
Table 2.2-1 Seismic Classification of Structures....2.2-5
Table 2.2-2 Definition of Wall Thicknesses for Seismic Category I Structures: Containment Internal Structure, Reactor Building and Power Source Building....2.2-6
Table 2.2-3 Main Components Protected against External Floods, Internal Floods and Internal Fires....2.2-22
Table 2.2-4 Structural and Systems Engineering Inspections, Tests, Analyses, and Acceptance Criteria....2.2-23
Table 2.2-5 Internal Flooding Elevation above Floor....2.2-27
Table 2.3-1 High and Moderate Energy Piping System Considered for Protection of Essential Systems....2.3-4
Table 2.3-2 Piping Systems and Components Inspections, Tests, Analyses, and Acceptance Criteria....2.3-6
Table 2.3-3 Systems with ASME Code Section III, Class 1, 2, and 3 Piping Systems and Components....2.3-9
Table 2.4.1-1 Equipment Key Attributes....2.4-3
Table 2.4.1-2 Reactor System Inspections, Tests, Analyses, and Acceptance Criteria....2.4-4
Table 2.4.2-1 Reactor Coolant System Location of Equipment and Piping....2.4-14
Table 2.4.2-2 Reactor Coolant System Equipment Characteristics....2.4-15
Table 2.4.2-3 Reactor Coolant System Piping Characteristics....2.4-19
Table 2.4.2-4 Reactor Coolant System Equipment Alarms, Displays, and Control Functions....2.4-20
Table 2.4.2-5 Reactor Coolant System Inspections, Tests, Analyses, and Acceptance Criteria....2.4-21
Table 2.4.4-1 Emergency Core Cooling System Location of Equipment and Piping....2.4-38
Table 2.4.4-2 Emergency Core Cooling System Equipment Characteristics....2.4-39
Table 2.4.4-3 Emergency Core Cooling System Piping Characteristics....2.4-43
Table 2.4.4-4 Emergency Core Cooling System Equipment Alarms, Displays and Control Functions....2.4-44
Table 2.4.4-5 Emergency Core Cooling System Inspections, Tests, Analyses, and Acceptance Criteria....2.4-46

TABLES (Continued)

Page

Table 2.4.4-6 Requirement for Accumulator System Resistance Coefficient 2.4-56

Table 2.4.5-1 Residual Heat Removal System Location of Equipment and Piping.....2.4-64

Table 2.4.5-2 Residual Heat Removal System Equipment Characteristics 2.4-65

Table 2.4.5-3 Residual Heat Removal System Piping Characteristics 2.4-67

Table 2.4.5-4 Residual Heat Removal System Equipment Alarms, Displays, and Control Functions 2.4-68

Table 2.4.5-5 Residual Heat Removal System Inspections, Tests, Analyses, and Acceptance Criteria.....2.4-69

Table 2.4.6-1 Chemical and Volume Control System Location of Equipment and Piping 2.4-83

Table 2.4.6-2 Chemical and Volume Control System Equipment Characteristics...2.4-85

Table 2.4.6-3 Chemical and Volume Control System Piping Characteristics 2.4-91

Table 2.4.6-4 Chemical and Volume Control System Equipment Alarms, Displays, and Control Functions 2.4-93

Table 2.4.6-5 Chemical and Volume Control System Inspections, Tests, Analyses, and Acceptance Criteria 2.4-95

Table 2.4.7-1 Reactor Coolant Pressure Boundary Leakage Detection System Inspections, Tests, Analyses, and Acceptance Criteria.....2.4-105

Table 2.5.1-1 Equipment Names and Classifications of PSMS and Field Equipment for RT System and ESF System.....2.5-5

Table 2.5.1-2 Reactor Trip and Monitored Variables.....2.5-6

Table 2.5.1-3 ESF Actuations and Monitored Variables.....2.5-7

Table 2.5.1-4 Interlocks Important to Safety.....2.5-9

Table 2.5.1-5 Monitored Variables Using Signal Selection Algorithms (SSA).....2.5-10

Table 2.5.1-6 RT System and ESF System Inspections, Tests, Analyses, and Acceptance Criteria 2.5-11

Table 2.5.1-7 Operating Bypasses 2.5-20

Table 2.5.2-1 Safe Shutdown Functions and Related Process Systems for Hot Standby 2.5-27

Table 2.5.2-2 Safe Shutdown Functions and Related Process Systems for Cold Shutdown.....2.5-27

TABLES (Continued)

Page

Table 2.5.2-3 Systems Required for Safe Shutdown Inspections, Tests, Analyses, and Acceptance Criteria 2.5-28
Table 2.5.3-1 Variables Monitored by DAS 2.5-33
Table 2.5.3-2 Equipment Actuated by DAS....2.5-33
Table 2.5.3-3 DAS Functions and Actuation Signals 2.5-34
Table 2.5.3-4 Diverse Actuation System Inspections, Tests, Analyses, and Acceptance Criteria....2.5-35
Table 2.5.4-1 Post Accident Monitoring Variables 2.5-41
Table 2.5.4-2 Information Systems Important to Safety Inspections, Tests, Analyses, and Acceptance Criteria....2.5-42
Table 2.5.4-3 Alarms for Credited Manual Operator Actions 2.5-44
Table 2.5.5-1 Control Systems Not Required for Safety Inspections, Tests, Analyses, and Acceptance Criteria....2.5-47
Table 2.5.5-2 Arrangement of Control Systems Not Required for Safety 2.5-48
Table 2.5.6-1 Data Communication Systems Inspections, Tests, Analyses, and Acceptance Criteria....2.5-51
Table 2.6.1-1 AC Electric Power Systems – Safety-related Equipment Characteristics 2.6-5
Table 2.6.1-2 AC Electric Power Systems Equipment Displays and Control Functions....2.6-6
Table 2.6.1-3 AC Electric Power Systems Inspections, Tests, Analyses, and Acceptance Criteria....2.6-7
Table 2.6.2-1 DC Power System Equipment Characteristics....2.6-17
Table 2.6.2-2 DC Power Systems Inspections, Tests, Analyses, and Acceptance Criteria....2.6-18
Table 2.6.3-1 I&C Power Supply Systems Equipment Characteristics 2.6-25
Table 2.6.3-2 I&C Power Supply Systems Equipment Displays and Control Functions 2.6-26
Table 2.6.3-3 I&C Power Supply Systems Inspections, Tests, Analyses, and Acceptance Criteria....2.6-27
Table 2.6.4-1 EPS Systems Inspections, Tests, Analyses, and Acceptance Criteria....2.6-36
Table 2.6.4-2 EPS Support Systems Equipment and Piping Characteristics....2.6-46

TABLES (Continued)

Page

Table 2.6.5-1 AAC Systems Inspections, Tests, Analyses, and Acceptance Criteria 2.6-49
Table 2.6.6-1 Plant Lighting Systems Inspections, Tests, Analyses, and Acceptance Criteria 2.6-54
Table 2.6.7-1 Grounding and Lightning Protection System Inspections, Tests, Analyses, and Acceptance Criteria 2.6-57
Table 2.6.8-1 Containment Electric Penetration Assemblies Inspections, Tests, Analyses, and Acceptance Criteria 2.6-59
Table 2.7.1.1-1 Turbine Generator Inspections, Tests, Analyses, and Acceptance Criteria 2.7-3
Table 2.7.1.2-1 Main Steam Supply System Location of Equipment and Piping 2.7-8
Table 2.7.1.2-2 Main Steam Supply System Equipment Characteristics 2.7-9
Table 2.7.1.2-3 Main Steam Supply System Piping Characteristics 2.7-11
Table 2.7.1.2-4 Main Steam Supply System Equipment Alarms, Displays, and Control Functions 2.7-12
Table 2.7.1.2-5 Main Steam Supply System Inspections, Tests, Analyses, and Acceptance Criteria 2.7-13
Table 2.7.1.9-1 Condensate and Feedwater System Location of Equipment and Piping 2.7-31
Table 2.7.1.9-2 Condensate and Feedwater System Equipment Characteristics ..2.7-32
Table 2.7.1.9-3 Condensate and Feedwater System Piping Characteristics 2.7-34
Table 2.7.1.9-4 Condensate and Feedwater System Equipment Alarms, Displays, and Control Functions 2.7-34
Table 2.7.1.9-5 Condensate and Feedwater System Inspections, Tests, Analyses, and Acceptance Criteria 2.7-35
Table 2.7.1.10-1 Steam Generator Blowdown System Equipment Characteristics .2.7-45
Table 2.7.1.10-2 Steam Generator Blowdown System Piping Characteristics 2.7-46
Table 2.7.1.10-3 Steam Generator Blowdown System Equipment Alarms Displays and Control Functions 2.7-46
Table 2.7.1.10-4 Steam Generator Blowdown System Inspections, Tests, Analyses, and Acceptance Criteria 2.7-47
Table 2.7.1.11-1 Emergency Feedwater System Location of Equipment and Piping 2.7-57
Table 2.7.1.11-2 Emergency Feedwater System Equipment Characteristics 2.7-60

TABLES (Continued)

Page

Table 2.7.1.11-3 Emergency Feedwater System Piping Characteristics 2.7-71

Table 2.7.1.11-4 Emergency Feedwater System Equipment Alarms, Displays, and Control Functions 2.7-72

Table 2.7.1.11-5 Emergency Feedwater System Inspections, Tests, Analyses, and Acceptance Criteria 2.7-73

Table 2.7.3.1-1 Essential Service Water System Location of Equipment and Piping 2.7-89

Table 2.7.3.1-2 Essential Service Water System Equipment Characteristics 2.7-90

Table 2.7.3.1-3 Essential Service Water System Piping Characteristics 2.7-92

Table 2.7.3.1-4 Essential Service Water System Equipment Alarms, Displays, and Control Functions 2.7-92

Table 2.7.3.1-5 Essential Service Water System Inspections, Tests, Analyses, and Acceptance Criteria 2.7-93

Table 2.7.3.3-1 Component Cooling Water System Location of Equipment and Piping 2.7-105

Table 2.7.3.3-2 Component Cooling Water System Equipment Characteristics ..2.7-107

Table 2.7.3.3-3 Component Cooling Water System Piping Characteristics 2.7-115

Table 2.7.3.3-4 Component Cooling Water System Equipment Alarms, Displays, and Control Functions 2.7-117

Table 2.7.3.3-5 Component Cooling Water System Inspections, Tests, Analyses, and Acceptance Criteria 2.7-119

Table 2.7.3.5-1 Essential Chilled Water System Location of Equipment and Piping 2.7-133

Table 2.7.3.5-2 Essential Chilled Water System Equipment Characteristics 2.7-134

Table 2.7.3.5-3 Essential Chilled Water System Piping Characteristics 2.7-137

Table 2.7.3.5-4 Essential Chilled Water System Equipment Alarms, Displays and Control Functions 2.7-138

Table 2.7.3.5-5 Essential Chilled Water System Inspections, Tests, Analyses, and Acceptance Criteria 2.7-140

Table 2.7.3.6-1 Non-Essential Chilled Water System Location of Equipment and Piping 2.7-150

Table 2.7.3.6-2 Non-Essential Chilled Water System Piping Characteristics 2.7-150

Table 2.7.3.6-3 Non-Essential Chilled Water System Inspections, Tests, Analyses, and Acceptance Criteria 2.7-151

TABLES (Continued)

Page

Table 2.7.4.1-1 Liquid Waste Management System Inspections, Tests, Analyses, and Acceptance Criteria 2.7-155

Table 2.7.4.1-2 Liquid Waste Management System Major Component 2.7-156

Table 2.7.4.2-1 Gasouse Waste Management System Inspections, Tests, Analyses, and Acceptance Criteria 2.7-158

Table 2.7.4.2-2 Gaseous Waste Management System Major Component 2.7-159

Table 2.7.4.3-1 Solid Waste Management System Inspections, Tests, Analyses, and Acceptance Criteria 2.7-161

Table 2.7.4.3-2 Solid Waste Management System Spent Resin Tanks 2.7-162

Table 2.7.5.1-1 Main Control Room HVAC System Equipment Characteristics .. 2.7-165

Table 2.7.5.1-2 Main Control Room HVAC System Equipment Alarms, Displays and Control Functions 2.7-168

Table 2.7.5.1-3 Main Control Room HVAC System Inspections, Tests, Analyses, and Acceptance Criteria 2.7-170

Table 2.7.5.2-1 Engineered Safety Features Ventilation Systems Equipment Characteristics 2.7-180

Table 2.7.5.2-2 Engineered Safety Features Ventilation Systems Equipment Alarms, Displays and Control Functions 2.7-190

Table 2.7.5.2-3 Engineered Safety Features Ventilation Systems Inspections, Tests, Analyses, and Acceptance Criteria 2.7-194

Table 2.7.5.3-1 Containment Ventilation System Inspections, Tests, Analyses, and Acceptance Criteria 2.7-208

Table 2.7.5.4-1 Auxiliary Building Ventilation System Equipment Characteristics 2.7-212

Table 2.7.5.4-2 Auxiliary Building Ventilation System Equipment Alarms, Displays and Control Functions 2.7-213

Table 2.7.5.4-3 Auxiliary Building Ventilation System Inspections, Tests, Analyses, and Acceptance Criteria 2.7-214

Table 2.7.6.1-1 New Fuel Storage Inspections, Tests, Analyses, and Acceptance Criteria 2.7-220

Table 2.7.6.2-1 Spent Fuel Storage Inspections, Tests, Analyses, and Acceptance Criteria 2.7-222

Table 2.7.6.3-1 Spent Fuel Pit Cooling and Purification System Equipment Characteristics 2.7-225

Table 2.7.6.3-2 Spent Fuel Pit Cooling and Purification System Piping Characteristics 2.7-226

TABLES (Continued)

Page

Table 2.7.6.3-3 Spent Fuel Pit Cooling and Purification System Equipment Alarms, Displays and Control Functions 2.7-226

Table 2.7.6.3-4 Spent Fuel Pit Cooling and Purification System Location of Equipment and Piping 2.7-227

Table 2.7.6.3-5 Spent Fuel Pit Cooling and Purification System Inspections, Tests, Analyses, and Acceptance Criteria 2.7-228

Table 2.7.6.4-1 Light Load Handling System Characteristics 2.7-236

Table 2.7.6.4-2 Light Load Handling System Inspections, Tests, Analyses, and Acceptance Criteria 2.7-237

Table 2.7.6.5-1 Overhead Heavy Load Handling System Inspections, Tests, Analyses, and Acceptance Criteria 2.7-243

Table 2.7.6.6-1 Process Effluent Radiation Monitoring and Sampling System Equipment Characteristics 2.7-250

Table 2.7.6.6-2 Process Effluent Radiation Monitoring and Sampling System Inspections, Tests, Analyses, and Acceptance Criteria 2.7-252

Table 2.7.6.7-1 Process and Post-accident Sampling System Equipment Characteristics 2.7-256

Table 2.7.6.7-2 Process and Post-accident Sampling System Location of the Equipment 2.7-257

Table 2.7.6.7-3 Process and Post-accident Sampling System Piping Characteristics 2.7-257

Table 2.7.6.7-4 Process and Post-accident Sampling System Equipment Alarms, Displays and Control Functions 2.7-258

Table 2.7.6.7-5 Process and Post-accident Sampling System Inspections, Tests, Analyses, and Acceptance Criteria 2.7-259

Table 2.7.6.8-1 Equipment and Floor Drainage Systems Inspections, Tests, Analyses and Acceptance Criteria 2.7-268

Table 2.7.6.9-1 Fire Protection System MCR Displays 2.7-272

Table 2.7.6.9-2 Fire Protection System Inspections, Tests, Analyses, and Acceptance Criteria 2.7-273

Table 2.7.6.10-1 Communication Systems Inspections, Tests, Analyses, and Acceptance Criteria 2.7-277

Table 2.7.6.13-1 Area Radiation Monitoring System Equipment Characteristics 2.7-282

Table 2.7.6.13-2 Airborne Radioactivity Monitoring System Equipment Characteristics 2.7-282

TABLES (Continued)

Page

Table 2.7.6.13-3 Area Radiation and Airborne Radioactivity Monitoring Systems Inspections, Tests, Analyses, and Acceptance Criteria 2.7-283

Table 2.8-1 Radiation Protection Inspections, Tests, Analyses, and Acceptance Criteria.....2.8-2

Table 2.8-2 Radiation Zone Designations 2.8-2

Table 2.9-1 Human Factors Engineering Inspections, Tests, Analyses, and Acceptance Criteria.....2.9-4

Table 2.10-1 Emergency Planning Inspections, Tests, Analyses, and Acceptance Criteria.....2.10-2

Table 2.11.1-1 Key Containment Design and Performance Characteristics.....2.11-3

Table 2.11.1-2 Containment Vessel Inspections, Tests, Analyses, and Acceptance Criteria.....2.11-4

Table 2.11.2-1 Containment Isolation System Equipment Characteristics 2.11-9

Table 2.11.2-2 Containment Isolation System Inspections, Tests, Analyses, and Acceptance Criteria.....2.11-19

Table 2.11.2-3 Containment Isolation System Equipment Alarms, Displays and Control Functions 2.11-29

Table 2.11.3-1 Containment Spray System Piping Location.....2.11-35

Table 2.11.3-2 Containment Spray System Equipment Characteristics 2.11-36

Table 2.11.3-3 Containment Spray System Piping Characteristics.....2.11-37

Table 2.11.3-4 Containment Spray System Equipment Alarms, Displays and Control Functions.....2.11-37

Table 2.11.3-5 Containment Spray System Inspections, Tests, Analyses, and Acceptance Criteria.....2.11-38

Table 2.11.4-1 Containment Hydrogen Monitoring and Control System Inspections, Tests, Analyses, and Acceptance Criteria 2.11-47

Table 2.12-1 Physical Security Hardware Inspections, Tests, Analyses, and Acceptance Criteria.....2.12-4

Table 2.13-1 Design Reliability Assurance Program Inspections, Tests, Analyses, and Acceptance Criteria.....2.13-2

FIGURES

Page

Figure 2.1-1 US-APWR Certified Seismic Design Response Spectra (Horizontal) 2.1-10
Figure 2.1-2 US-APWR Certified Seismic Design Response Spectra (Vertical) ... 2.1-11
Figure 2.2-1 US-APWR Building Configuration (Plan View) ... 2.2-35
Figure 2.2-2 US-APWR Building Configuration (Section Views) ... 2.2-36
Figure 2.2-3 US-APWR Building Architectural Layout R/B Plan View Elevation -26'-4" ... 2.2-37
Figure 2.2-4 US-APWR Building Architectural Layout R/B Plan View Elevation 3'-7" ... 2.2-38
Figure 2.2-5 US-APWR Building Architectural Layout R/B Plan View Elevation 25'-8" ... 2.2-39
Figure 2.2-6 US-APWR Building Architectural Layout R/B Plan View Elevation 50'-2" ... 2.2-40
Figure 2.2-7 US-APWR Building Architectural Layout R/B Plan View Elevation 76'-5" ... 2.2-41
Figure 2.2-8 US-APWR Building Architectural Layout R/B Plan View Elevation 101'-0" ... 2.2-42
Figure 2.2-9 US-APWR Building Architectural Layout R/B Plan View Elevation 115'-6" ... 2.2-43
Figure 2.2-10 US-APWR Building Architectural Layout R/B Section View Section "A-A" ... 2.2-44
Figure 2.2-11 US-APWR Building Architectural Layout R/B Section View Section "B-B" ... 2.2-45
Figure 2.2-12 US-APWR Building Architectural Layout PS/Bs Plan View Elevation -26'-4", 3'-7", 39'-6" ... 2.2-46
Figure 2.2-13 US-APWR Building Architectural Layout PS/B Section View Section "A-A" ... 2.2-47
Figure 2.2-14 Flood barriers and water-tight doors R/B EL -26' -4" (B1F) ... 2.2-48
Figure 2.2-15 Flood barriers and water-tight doors R/B EL -8' -7" (B1MF) ... 2.2-49
Figure 2.2-16 Flood barriers and water-tight doors R/B EL 3' -7" (1F) ... 2.2-50
Figure 2.2-17 Flood barriers and water-tight doors R/B EL 13' -6" (1MF) ... 2.2-51
Figure 2.2-18 Flood barriers and water-tight doors R/B EL 25' -3" (2F) ... 2.2-52
Figure 2.2-19 Flood barriers and water-tight doors R/B EL 35' -2" (2MF) ... 2.2-53
Figure 2.2-20 Flood barriers and water-tight doors R/B EL 50' -2" (3F) ... 2.2-54
Figure 2.2-21 Flood barriers and water-tight doors R/B EL 76' -5" (4F) ... 2.2-55

FIGURES (Continued)

Page

Figure 2.2-22 Flood barriers and water-tight doors R/B EL 101' -0" (Roof) 2.2-56
Figure 2.2-23 Flood barriers and water-tight doors R/B EL 115' -6" (Roof) 2.2-57
Figure 2.2-24 Flood barriers and water-tight doors PS/B EL -26' -4" (B1F) EL -14' -2"(B1MF) 2.2-58
Figure 2.2-25 Flood barriers and water-tight doors PS/B EL 3' -7" (1F) EL 24' -2"(1MF), EL 39' -6" (Roof) 2.2-59
Figure 2.4.1-1 Reactor General Assembly 2.4-8
Figure 2.4.1-2 Arrangement of Fuel and Rod Cluster Control Assemblies 2.4-9
Figure 2.4.1-3 Reactor Vessel 2.4-10
Figure 2.4.2-1 Isometric View of the Reactor Coolant System 2.4-29
Figure 2.4.2-2 Reactor Coolant System 2.4-30
Figure 2.4.2-3 RCS Total Flow Versus Time Complete Loss of Forced Reactor Coolant Flow 2.4-32
Figure 2.4.4-1 Emergency Core Cooling System 2.4-57
Figure 2.4.5-1 Residual Heat Removal System 2.4-78
Figure 2.4.6-1 Chemical and Volume Control System 2.4-102
Figure 2.5.1-1 Configuration of the Reactor Trip System 2.5-21
Figure 2.5.1-2 Configuration of the Engineered Safety Feature System 2.5-22
Figure 2.5.1-3 Configuration of the Safety Grade Component Control System ..2.5-23
Figure 2.5.1-4 Configuration of the Reactor Trip Breakers 2.5-24
Figure 2.5.2-1 Configuration of the SLS and HSIS for Safe Shutdown 2.5-30
Figure 2.5.3-1 DAS Configuration 2.5-39
Figure 2.5.4-1 Configuration of the PSMS and PCMS for Information Systems Important to Safety 2.5-45
Figure 2.5.6-1 DCS Configuration 2.5-53
Figure 2.6.1-1 Onsite ac Power One Line Diagram 2.6-14
Figure 2.6.2-1 DC Power Systems 2.6-22
Figure 2.6.3-1 I&C Power Supply Systems 2.6-31
Figure 2.7.1.2-1 Main Steam Supply System 2.7-22
Figure 2.7.1.9-1 Feedwater System 2.7-42
Figure 2.7.1.10-1 Steam Generator Blowdown System 2.7-53
Figure 2.7.1.11-1 Emergency Feedwater System 2.7-82

FIGURES (Continued)

Page

Figure 2.7.3.1-1 Essential Service Water System....2.7-100
Figure 2.7.3.3-1 Component Cooling Water System 2.7-127
Figure 2.7.3.5-1 Essential Chilled Water System....2.7-147
Figure 2.7.3.6-1 Non-Essential Chilled Water System....2.7-152
Figure 2.7.5.1-1 Main Control Room HVAC System....2.7-175
Figure 2.7.5.2-1 Annulus Emergency Exhaust System....2.7-201
Figure 2.7.5.2-2 Class 1E Electrical Room HVAC System 2.7-202
Figure 2.7.5.2-3 Safeguard Component Area HVAC System 2.7-203
Figure 2.7.5.2-4 Emergency Feedwater Pump Area HVAC System....2.7-204
Figure 2.7.5.2-5 Safety Related Component Area HVAC System 2.7-205
Figure 2.7.6.3-1 Spent Fuel Pit Cooling and Purification System 2.7-233
Figure 2.7.6.7-1 Process and Post-accident Sampling System 2.7-266
Figure 2.7.6.8-1 Equipment and Floor Drain System Flow Schematic 2.7-270
Figure 2.11.1-1 Configuration of Prestressed Concrete Containment Vessel 2.11-6
Figure 2.11.2-1 Containment Isolation Valves Basic Configuration 2.11-30
Figure 2.11.3-1 Containment Spray System 2.11-45
Figure 2.11.4-1 Containment Hydrogen Monitoring and Control System 2.11-48

ACRONYMS AND ABBREVIATIONS

AAC	alternate alternating current
A/B	auxiliary building
ABVS	auxiliary building ventilation system
ac	alternating current
AC/B	access building
ALARA	as low as reasonably achievable
AOO	anticipated operational occurrence
APWR	advanced pressurized-water reactor
ARMS	area radiation monitoring system
ASME	American Society of Mechanical Engineers
ASSS	auxiliary steam supply system
ATWS	anticipated transient without scram
BISI	bypassed and inoperable status indication
BTU	british thermal unit
C/V	containment vessel
CAGS	compressed air and gas system
CAS	central alarm station
CCF	common cause failure
CCW	component cooling water
CCWS	component cooling water system
CDS	condensate system
CFR	Code of Federal Regulations
CFS	condensate and feedwater system
CHS	containment hydrogen monitoring and control system
CIS	containment isolation system
CIV	containment isolation valve
COL	Combined License
CPS	condensate polishing system
CRDM	control rod drive mechanism
CRE	control room envelope
CS	containment spray
CS/RHR	containment spray/residual heat removal
CSS	containment spray system
CVCS	chemical and volume control system
CVVS	containment ventilation system

ACRONYMS AND ABBREVIATIONS (Continued)

CWS	circulating water system
DAAC	diverse automatic actuation cabinet
DAS	diverse actuation system
DBA	design-basis accident
DBT	design basis threat
dc	direct current
DCD	Design Control Document
DCS	data communication system
DHP	diverse HIS panel
D-RAP	design reliability assurance program
EAB	exclusion area boundary
ECC	emergency core cooling
ECCS	emergency core cooling system
ECW	essential chilled water
ECWS	essential chilled water system
EFW	emergency feedwater
EFWS	emergency feedwater system
EOF	emergency operations facility
EPA	containment electric penetration assembly
EPS	emergency power source
ESF	engineered safety features
ESFAS	engineered safety features actuation system
ESFVS	engineered safety features ventilation system
ESW	essential service water
ESWP	essential service water pump
ESWPT	essential service water pipe tunnel
ESWS	essential service water system
FHA	fire hazard analysis
FOS	fuel oil storage and transfer system
FPS	fire protection system
FSS	fire protection water supply system
FWS	feedwater system
GLBS	generator load break switch
GSS	gland seal system
GTG	gas turbine generator

ACRONYMS AND ABBREVIATIONS (Continued)

GWMS	gaseous waste management system
HCLPF	high confidence of low probability of failuer
HED	human engineering deficiency
HEPA	high-efficiency particulate air
HFE	human factors engineering
HPM	human performance monitoring
HSI	human-system interface
HSIS	human-system interface system
HVAC	heating, ventilation, and air conditioning
I&C	instrumentation and control
I/O	input/output
IAS	instrument air system
ICIGS	incore instrument gas purge system
ICIS	incore instrumentation system
IEEE	Institute of Electrical and Electronics Engineers
ITAAC	inspections, tests, analyses, and acceptance criteria
ITP	initial test program
IV	intercept valve
LBB	leak-before-break
LCS	local control station
LLHS	light load handling system
LOCA	loss-of-coolant accident
LOOP	loss of offsite power
LPT	low-pressure turbine
LPMS	loose parts monitoring system
LPZ	low-population zone
LTOP	low temperature overpressure protection
LWMS	liquid waste management system
M/D	motor-driven
M/G	motor generator
MCC	motor control center
MCES	main condenser evacuation system
MCR	main control room
MFRV	main feedwater regulatory valve
MFBRV	main feedwater bypass regulation valve

ACRONYMS AND ABBREVIATIONS (Continued)

MG	main generator
MOV	motor operated valve
MS/R	moisture separator reheater
MSBIV	main steam bypass isolation valve
MSCV	main steam check valve
MSDV	main steam depressurization valve
MS/FW	main steam / feedwater
MSIV	main steam isolation valve
MSLB	main steam line break
MSRV	main steam relief valve
MSRVBV	main steam relief valve block valve
MSS	main steam supply system
MSSV	main steam safety valve
MT	main transformer
MTCV	main turbine control valve
MTSV	main turbine stop valve
N/E	normal/emergency
NaTB	sodium tetraborate decahydrate
NPSH	net positive suction head
NRC	U.S. Nuclear Regulatory Commission
NRCA	non-radiological controlled area
NS	non-seismic
NSSS	nuclear steam supply system
OBE	operating-basis earthquake
OHLHS	overhead heavy load handling system
PA	postulated accident
PAM	post accident monitoring
PCCV	prestressed concrete containment vessel
PCMS	plant control and monitoring system
PERMS	process effluent radiation monitoring and sampling system
PMWP	probable maximum winter precipitation
PMWS	primary makeup water system
PRA	probabilistic risk assessment
PS/B	power source building
PSFSV	power source fuel storage vault

ACRONYMS AND ABBREVIATIONS (Continued)

PSMS	protection and safety monitoring system
PSS	process and post-accident sampling system
PSWS	potable and sanitary water systems
QA	quality assurance
R/B	reactor building
RAT	reserve auxiliary transformer
RCA	radiological controlled area
RCCA	rod cluster control assembly
RCP	reactor coolant pump
RCPB	reactor coolant pressure boundary
RCS	reactor coolant system
RG	Regulatory Guide
RHR	residual heat removal
RHRS	residual heat removal system
RPS	reactor protection system
RSC	remote shutdown console
RSR	remote shutdown room
RSV	reheat stop valve
RT	reactor trip
RTB	reactor trip breaker
RV	reactor vessel
RWS	refueling water storage system
RWSAT	refueling water storage auxiliary tank
RWSP	refueling water storage pit
SAS	secondary alarm station
SBO	station blackout
SC	steel-concrete
SCIS	secondary side chemical injection system
SFP	spent fuel pit
SFPCS	spent fuel pit cooling and purification system
SG	steam generator
SGBDS	steam generator blowdown system
SGWFCV	steam generator water filling control valve
SIS	safety injection system
SLS	safety logic system

ACRONYMS AND ABBREVIATIONS (Continued)

SPDS	safety parameter display system
SPTS	sound powered telephone system
SSA	signal selector algorithm
SSAS	station service air system
SSC	structure, system, and component
SSE	safe-shutdown earthquake
SST	station service transformer
SWMS	solid waste management system
T/B	turbine building
T/D	turbine driven
T/G	turbine generator
T_{avg}	average temperature
TBS	turbine bypass system
TN	transmission network
TSC	technical support center
UAT	unit auxiliary transformer
UHS	ultimate heat sink
UHSRS	ultimate heat sink related structures
UMC	unit management computer
UPS	uninterruptible power supply
V&V	verification and validation
VCT	volume control tank
VDU	visual display unit
VWS	chilled water system
WMS	waste management system

1.0 INTRODUCTION

1.1 DEFINITIONS

The following definitions apply to terms that may be used in the Design Descriptions and associated Inspections, Tests, Analyses, and Acceptance Criteria (ITAAC).

Acceptance Criteria means the performance, physical condition, or analysis result for a structure, system, or component that demonstrates that the Design Commitment is met.

Analysis means a calculation, mathematical computation, or engineering/ technical evaluation. Engineering or technical evaluations could include, but are not limited to, comparisons with operating experience or design of similar SSCs.

As-built means the physical properties of a structure, system, or component following completion of its installation or construction activities at its final location at the plant site. In cases where it is technically justifiable, determination of physical properties of the as-built structure, system, or component may be based on measurements, inspections, or tests that occur prior to installation, provided that subsequent fabrication, handling, installation, and testing do not alter the properties.

ASME Code means Section III of the American Society of Mechanical Engineers (ASME) Boiler and Pressure Vessel Code.

ASME Code Report means a report required by the ASME Code and whose content requirements are stipulated by the ASME Code. Each such ASME Code Report is final, and, when required, is certified in accordance with the Code.

Column line is the designation applied to a plant reference grid used to define the locations of building walls and columns. Column lines may not represent the centerline of walls and columns.

Containment, when this term is used as “the containment,” means the containment vessel or, as it is sometimes referred to, the prestressed concrete containment vessel.

Design Commitment means that portion of the Design Description that is verified by ITAAC.

Design Description means that portion of the design that is certified.

Design plant grade means the elevation of the soil around the nuclear island assumed in the design (i.e., “plant grade” or “finished grade level”) in relation to plant structures to which other plant elevations are correlated and which is set at 2’-7”.

Division (for electrical systems) is the designation applied to each portion of a given safety-related system (i.e., the set of connected electrical components) that is physically, electrically, and functionally independent from other redundant sets of components.

Division (for mechanical systems) is the designation applied to a specific set of safety-related components that perform redundant, identical mechanical functions within a system.

Exists, when this term is used in the Acceptance Criteria, means that the item is present and consistent with the Design Description.

Functional arrangement (for a system) means the physical arrangement of components in a system to provide the function for which the system is intended as described in the Design Description.

Harsh environment means the limiting environmental conditions resulting from a design basis accident.

Inspect or **Inspection** means visual observations, physical examinations, or reviews of records based on visual observation or physical examination that compare the SSC condition to one or more Design Commitments. Examples include, but are not limited to, walkdowns, configuration checks, measurements of dimensions, and nondestructive examinations. Inspections may also include review of design and construction documents including drawings, calculations, analyses, test procedures and results, certificates of compliance, purchase records, and other documents that verify that the Acceptance Criteria of a particular ITAAC are met.

Inspect for retrievability of a display or alarm means to visually observe that the specified information appears on a monitor when summoned by the operator.

Operate means the actuation, control, running, or shutting down (e.g., closing, turning off) of the equipment.

Physical or **functional arrangement (for a structure)** means the arrangement of the building features (e.g., floors, ceilings, walls, doorways, and basemat) as described in the Design Description.

PSMS Control means a safety-related control signal to a component or equipment from the protection and safety monitoring system. The signals may include automatic and remote-manual signals.

Qualified for a harsh environment means that the subject equipment can withstand environmental conditions that would exist before, during, and after a design basis accident and still perform its safety function.

Raceway system consists of the raceway (cable conduits and cable trays) and raceway supports including anchorages.

Report means, as used in the Acceptance Criteria, a document created by or for the licensee that verifies that the Acceptance Criteria of the subject ITAAC have been met and references the supporting documentation. Reports typically include, but are not limited to: results of walkdowns, results of visual inspections, field measurements, calculations, analyses, certificates of compliance, test results, or design and construction documents.

Tag number means the identifying number assigned to individual hardware items. Tag numbers in Tier 1 provide unique identification of the items and include system designation. Refer to Section 1.4 for additional explanation of the Tier 1 numbering methodology.

Test or **Testing** means actuation or operation, or establishment of specified conditions to evaluate the performance or integrity of as-built SSCs, unless explicitly stated otherwise.

Transfer open (or transfer closed) means to move from a closed position to an open position (or vice versa).

Type test means a test performed on one or more sample components to qualify other components of the same type and manufacturer. A type test is not necessarily a test of the as-built SSC.

1.2 GENERAL PROVISIONS

The following general provisions are applicable to the Design Descriptions and associated ITAAC.

1.2.1 Treatment of Individual Items

The absence of any discussion or depiction of an item in the Design Description or accompanying figures shall not be construed as prohibiting a licensee from utilizing such an item, unless it would prevent an item from performing its safety function(s), or impair the performance of those safety functions, as described or depicted in the Design Description or accompanying tables or figures.

If an inspection, test, or analysis requirement does not specify the temperature or other conditions under which the inspection, test or analysis must be conducted, then the conditions for the inspection, test or analysis are not constrained.

When the term “operate,” “operates,” or “operation” is used with respect to an item described in the Acceptance Criteria, it refers to the actuation, control, running, or shutting down of the item. When the term “exist,” “exists,” or “existence” is used with respect to an item described in the Acceptance Criteria, it means the item is present and meets the Design Commitment.

Dimensions in Tier 1, except for those in the ITAAC tables, are nominal values that are provided to aid in the understanding of the information.

1.2.2 ITAAC Tables

The ITAAC tables are arranged with three columns, with all ITAAC numbered for control purposes. The column headings are as follows:

Design Commitment	Inspections, Tests, Analyses	Acceptance Criteria

Each Design Commitment in the left-hand column of the ITAAC tables has an associated requirement for Inspections, Tests, or Analyses (ITA) specified in the middle column of the tables. The identification of a separate ITA entry for each Design Commitment shall not be construed to require that separate inspections, tests, or analyses must be performed for each Design Commitment. Instead, the activities associated with more than one ITA entry may be combined, and a single inspection, test, or analysis may be sufficient to implement more than one ITA entry.

An ITA may be performed by the licensee of the plant or by its authorized vendors, contractors, or consultants. Furthermore, an ITA may be performed by more than a single individual or group, may be implemented through discrete activities separated by time, and may be performed at any time prior to fuel load (including before issuance of the Combined License for those ITAAC that do not require as-built equipment). Additionally, ITA may be performed as part of the activities that are required to be performed under 10 CFR 50 (including, for example, the Quality Assurance (QA) program required under Appendix B to Part 50). Therefore, an ITA need not be performed as a separate or discrete activity.

Each ITA has an associated Acceptance Criteria in the third column that, if met, demonstrates that the licensee has met the Design Commitment in the first column. For each of the Acceptance Criteria, appropriate documentation may be a single document or a collection of documents that show that the stated Acceptance Criteria are met. Examples of appropriate documentation include design reports, test reports, inspection reports, analysis reports, evaluation reports, design and manufacturing procedures and records, certified data sheets, commercial dedication procedures and records, quality assurance records, calculation notes, and equipment qualification data packages.

The Acceptance Criteria are generally stated in terms of a value with an acceptable range, or with a value that is either a minimum or maximum. For these ITAAC, the acceptance criteria for performing the ITAAC will be as stated in the Acceptance Criteria. In some cases, the Acceptance Criteria are stated in terms of nominal values without an acceptable range. For these ITAAC, the acceptable range will be determined at the time of performing the ITAAC.

1.2.3 Discussion of Matters Related to Operations

In some cases, the Design Descriptions in this document refer to matters that relate to operation, such as normal valve or breaker alignment during normal operation modes. Such discussions are provided solely to place the Design Description provisions in context (e.g., to explain automatic features for opening or closing valves or breakers upon off-normal conditions). Such descriptions shall not be construed as requiring operators during operation to take any particular action (e.g., to maintain valves or breakers in a particular position during normal operation).

1.2.4 Interpretation of Figures

In many but not all cases, the Design Descriptions in Section 2 include one or more figures, which may represent a functional diagram, general structural representation, or another general illustration. Unless specified explicitly, these figures are not indicative of the scale, location, dimensions, shape, or spatial relationships of as-built SSCs. In particular, the as-built attributes of SSCs may vary from the attributes depicted on these figures, provided that those safety functions described in the Design Description pertaining to the figure are not adversely affected.

1.2.5 Rated Reactor Core Thermal Power

The rated reactor core thermal power for the US-APWR certified design is 4451 megawatts thermal (MWt).

1.3 Figure Legend

Certain Tier 1 sections include figures in the Design Description. The symbols used on the figures are identified on the following pages. The figure legend is provided for information only and is not part of the Tier 1 Material.

MECHANICAL EQUIPMENT

SYMBOL DESCRIPTION

	CENTRIFUGAL PUMP
	TANK
	CENTRIFUGAL FAN
	AXIAL FAN
	HEAT EXCHANGER (SHELL & TUBE TYPE)
	HEAT EXCHANGER (PLATE TYPE)
	ECC/CS STRAINER
	STEAM TURBINE
	DRIVEN PUMP
	ESSENTIAL SERVICE WATER PUMP
	SPRAY NOZZLE
	PENETRATION
HEPA	HIGH EFFICIENCY PARTICULATE AIR (HEPA) FILTER
C	CHARCOAL ADSORBER
HE/F	HIGH EFFICIENCY FILTER
C/C	CHILLED WATER COOLING COIL
EH/C	ELECTRIC HEATING COIL
	CAPPED STUB END
	BLIND FLANGE
	ORIFICE
	AIR INTAKE
	AIR OUTLET
	HEATER

VALVE

SYMBOL DESCRIPTION

- CHECK VALVE
- TWO-WAY VALVE
- PRESSURE RELIEF VALVE
- THREE-WAY VALVE

VALVE OPERATORS

SYMBOL DESCRIPTION

- MOTOR OPERATOR
- SOLENOID OPERATOR
- SYTEM MEDIUM OPERATOR
- AIR OPERATOR
- AIR OPERATOR WITH POSITIONER

DAMPERS

SYMBOL DESCRIPTION

- ELECTRO HYDRAULIC OPERATED DAMPER
- MOTOR OPERATED DAMPER
- AIR OPERATED DAMPER
- TORNADO DAMPER

ELECTRICAL EQUIPMENT

SYMBOL DESCRIPTION

- HIGH VOLTAGE CIRCUIT BREAKER
- DRAWOUT TYPE CIRCUIT BREAKER
- MOLDED CASE CIRCUIT BREAKER
- DISCONNECTING SWITCH
- LOAD BREAK SWITCH
- LINKS
- TRANSFORMER
- GENERATOR
- WIRING
- CONTACTOR
- DIODE
- RECTIFIER
- --- M --- MECHANICAL INTERLOCK
- --- K --- MECHANICAL KEY INTERLOCK
- AC/DC CONVERTER
- INVERTER
- BATTERY

MISCELLANEOUS

A component that is part of the system functional arrangement shown on the figure and is included in the Design Commitments for the system.

A component that is part of the system functional arrangement shown on the figure.

A system or component of another system that is not part of the system functional arrangement shown on the figure.

ASME CODE CLASS BREAK

An ASME Code class break is identified by a single line to the designated location for the class break, as shown in the example below.

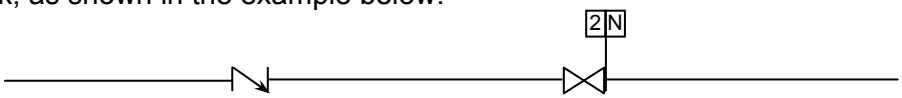

1.4 Tag Numbers

Tag numbers are used in Tier 1 to uniquely identify hardware items in the US-APWR. An example of the Tier 1 tag number format is shown below for the steam generator in Division A:

RCS – MHX – 001A

Where:

RCS is the System Code for reactor coolant system
MHX is the Equipment Function Code for heat exchanger
001 is the Serial Number
A is the suffix for Division A

The Tier 1 tag number format conforms to the full equipment number from which the plant designator and safety designator are omitted.

Tier 1 tag numbers are not part of the Tier 1 material.

2.0 DESIGN DESCRIPTIONS AND ITAAC

This chapter identifies site parameters and provides design descriptions and related ITAAC for different aspects of the US-APWR standard design.

The information in this chapter is organized as follows:

Section	Subject
2.1	SITE PARAMETERS
2.2	STRUCTURAL AND SYSTEMS ENGINEERING
2.3	PIPING SYSTEMS AND COMPONENTS
2.4	REACTOR SYSTEMS
2.5	INSTRUMENTATION AND CONTROLS
2.6	ELECTRICAL SYSTEMS
2.7	PLANT SYSTEMS
2.8	RADIATION PROTECTION
2.9	HUMAN FACTORS ENGINEERING
2.10	EMERGENCY PLANNING
2.11	CONTAINMENT SYSTEMS
2.12	PHYSICAL SECURITY HARDWARE
2.13	DESIGN RELIABILITY ASSURANCE PROGRAM
2.14	INITIAL TEST PROGRAM

2.1 SITE PARAMETERS

This section identifies key site parameters postulated for the US-APWR standard plant design. These parameters apply to the design of safety-related aspects of SSCs of the US-APWR.

2.1.1 Design Description

The design descriptions applicable to this section are reflected in the specified key site parameters identified in Table 2.1-1. A site for construction of a US-APWR plant will be acceptable if the site-specific characteristics fall within the key site parameter values specified in Table 2.1-1. In case of deviation from these parameters, justification may be provided that the proposed facility is acceptable at the proposed site.

2.1.2 Inspections, Tests, Analyses, and Acceptance Criteria

This section does not provide ITAAC.

Table 2.1-1 Key Site Parameters
(Sheet 1 of 7)

Meteorology	
Parameter Description	**Parameter Value**
Normal winter precipitation roof load(11)	50 lb/ft^2
Extreme winter precipitation roof load(12)	75 lb/ft^2
48-hr probable maximum winter precipitation (PMWP)	36 in.
Tornado maximum wind speed	230 mph
	184 mph maximum rotational
	46 mph maximum translational
Radius of maximum rotational speed	150 ft
Tornado maximum pressure drop	1.2 psi
Rate of pressure drop	0.5 psi/s
Tornado-generated missile spectrum and associated velocities	15 ft long schedule 40 steel pipe moving horizontally at 135 ft/s(1)
	4,000 lb automobile moving horizontally at 135 ft/s(1)
	1 in diameter steel sphere moving horizontally at 26 ft/s(1)
Extreme wind speed (other than tornado)	155 mph for 3-second gusts at 33 ft above ground level based on 100-year return period, with importance factor of 1.15 for seismic category I&II structures
Ambient design air temperature (1% annual exceedance maximum)	100°F dry bulb, 77°F coincident wet bulb, 81°F non-coincident wet bulb
Ambient design air temperature (0% annual exceedance maximum)	115°F dry bulb, 80°F coincident wet bulb, historical limit excluding peaks <2 hr
Ambient design air temperature (1% annual exceedance minimum)	-10°F dry bulb
Ambient design air temperature (0% annual exceedance minimum)	-40°F dry bulb, historical limit excluding peaks <2 hr

Table 2.1-1 Key Site Parameters
(Sheet 2 of 7)

Parameter Description	Parameter Value
Atmospheric dispersion factors (χ/Q values) for onsite locations:	
Exclusion area boundary (EAB) 0-2 hrs	5.0×10^{-4} s/m^3
EAB annual average	1.6×10^{-5} s/m^3
Atmospheric dispersion factors (χ/Q values) for offsite locations:	
Low-population zone (LPZ) boundary 0-8 hrs 8-24 hrs 1-4 days 4-30 days	 2.1×10^{-4} s/m^3 1.3×10^{-4} s/m^3 6.9×10^{-5} s/m^3 2.8×10^{-5} s/m^3
Food production area annual average	5.0×10^{-6} s/m^3
Deposition factor (D/Q value) for onsite and offsite locations:	
EAB annual average	4.0×10^{-8} 1/m^2

Table 2.1-1 Key Site Parameters
(Sheet 3 of 7)

Atmospheric dispersion factors (χ/Q values) for main control room (MCR) heating, ventilation, and air conditioning (HVAC) intake for specified release points[2]:	
Plant vent [5]	
0-8 hrs	1.1×10^{-3} s/m^3
8-24 hrs	6.6×10^{-4} s/m^3
1-4 days	4.2×10^{-4} s/m^3
4-30 days	2.8×10^{-4} s/m^3
Ground-level containment releases[4]	
0-8 hrs	2.2×10^{-3} s/m^3
8-24 hrs	1.3×10^{-3} s/m^3
1-4 days	8.3×10^{-4} s/m^3
4-30 days	5.5×10^{-4} s/m^3
Main steam relief valve and safety valve releases[6]	
0-8 hrs	5.3×10^{-3} s/m^3
8-24 hrs	3.1×10^{-3} s/m^3
1-4 days	2.0×10^{-3} s/m^3
4-30 days	1.3×10^{-3} s/m^3
Steam line break releases [8]	
0-8 hrs	1.9×10^{-2} s/m^3
8-24 hrs	1.1×10^{-2} s/m^3
1-4 days	7.1×10^{-3} s/m^3
4-30 days	4.7×10^{-3} s/m^3
Fuel handling area releases [7]	
0-8 hrs	1.1×10^{-3} s/m^3
8-24 hrs	6.4×10^{-4} s/m^3
1-4 days	4.1×10^{-4} s/m^3
4-30 days	2.7×10^{-4} s/m^3

Table 2.1-1 Key Site Parameters
(Sheet 4 of 7)

Atmospheric dispersion factors (χ/Q values) for MCR inleak for specified release points[3]*:*	
Plant vent [9]	
0-8 hrs	1.3×10^{-3} s/m^3
8-24 hrs	7.8×10^{-4} s/m^3
1-4 days	4.9×10^{-4} s/m^3
4-30 days	3.3×10^{-4} s/m^3
Plant vent [10]	
0-8 hrs	1.4×10^{-3} s/m^3
8-24 hrs	8.0×10^{-4} s/m^3
1-4 days	5.1×10^{-4} s/m^3
4-30 days	3.3×10^{-4} s/m^3
Ground-level containment releases [4]	
0-8 hrs	2.4×10^{-3} s/m^3
8-24 hrs	1.4×10^{-3} s/m^3
1-4 days	9.1×10^{-4} s/m^3
4-30 days	6.0×10^{-4} s/m^3
Main steam relief valve and safety valve releases [6]	
0-8 hrs	5.3×10^{-3} s/m^3
8-24 hrs	3.1×10^{-3} s/m^3
1-4 days	2.0×10^{-3} s/m^3
4-30 days	1.3×10^{-3} s/m^3
Steam line break releases [8]	
0-8 hrs	1.9×10^{-2} s/m^3
8-24 hrs	1.1×10^{-2} s/m^3
1-4 days	7.1×10^{-3} s/m^3
4-30 days	4.7×10^{-3} s/m^3
Fuel handling area releases [7]	
0-8 hrs	1.1×10^{-3} s/m^3
8-24 hrs	6.7×10^{-4} s/m^3
1-4 days	4.3×10^{-4} s/m^3
4-30 days	2.8×10^{-4} s/m^3

Table 2.1-1 Key Site Parameters
(Sheet 5 of 7)

Atmospheric dispersion factors (χ/Q values) for Technical Support Center (TSC) HVAC intake for specified release points[2]*:*	
Plant vent [5]	
0-8 hrs	1.4×10^{-3} s/m^3
8-24 hrs	8.0×10^{-4} s/m^3
1-4 days	5.1×10^{-4} s/m^3
4-30 days	3.3×10^{-4} s/m^3
Ground-level containment releases[4]	
0-8 hrs	1.9×10^{-3} s/m^3
8-24 hrs	1.1×10^{-3} s/m^3
1-4 days	7.2×10^{-4} s/m^3
4-30 days	4.8×10^{-4} s/m^3
Main steam relief valve and safety valve releases[6]	
0-8 hrs	1.7×10^{-3} s/m^3
8-24 hrs	9.9×10^{-4} s/m^3
1-4 days	6.3×10^{-4} s/m^3
4-30 days	4.2×10^{-4} s/m^3
Steam line break releases [8]	
0-8 hrs	1.4×10^{-3} s/m^3
8-24 hrs	8.4×10^{-4} s/m^3
1-4 days	5.3×10^{-4} s/m^3
4-30 days	3.5×10^{-4} s/m^3
Fuel handling area releases [7]	
0-8 hrs	6.7×10^{-4} s/m^3
8-24 hrs	3.9×10^{-4} s/m^3
1-4 days	2.5×10^{-4} s/m^3
4-30 days	1.7×10^{-4} s/m^3

Table 2.1-1 Key Site Parameters
(Sheet 6 of 7)

Atmospheric dispersion factors (χ/Q values) for TSC inleakage for specified release points[3]*:*	
Plant vent [5]	
0-8 hrs	1.4×10^{-3} s/m^3
8-24 hrs	8.0×10^{-4} s/m^3
1-4 days	5.1×10^{-4} s/m^3
4-30 days	3.3×10^{-4} s/m^3
Ground-level containment releases [4]	
0-8 hrs	1.9×10^{-3} s/m^3
8-24 hrs	1.1×10^{-3} s/m^3
1-4 days	7.2×10^{-4} s/m^3
4-30 days	4.8×10^{-4} s/m^3
Main steam relief valve and safety valve releases [6]	
0-8 hrs	1.7×10^{-3} s/m^3
8-24 hrs	9.9×10^{-4} s/m^3
1-4 days	6.3×10^{-4} s/m^3
4-30 days	4.2×10^{-4} s/m^3
Steam line break releases [8]	
0-8 hrs	1.4×10^{-3} s/m^3
8-24 hrs	8.4×10^{-4} s/m^3
1-4 days	5.3×10^{-4} s/m^3
4-30 days	3.5×10^{-4} s/m^3
Fuel handling area releases [7]	
0-8 hrs	6.7×10^{-4} s/m^3
8-24 hrs	3.9×10^{-4} s/m^3
1-4 days	2.5×10^{-4} s/m^3
4-30 days	1.7×10^{-4} s/m^3

Table 2.1-1 Key Site Parameters
(Sheet 7 of 7)

Hydrologic Engineering	
Parameter Description	**Parameter Value**
Maximum flood (or tsunami) level	1 ft below plant grade
Maximum rainfall rate (hourly)	19.4 in/hr for seismic category I/II structures
Maximum rainfall rate (short-term)	6.3 in/5 min for seismic category I/II structures
Maximum groundwater level	1 ft. below plant grade
Geology, Seismology, and Geotechnical Engineering	
Parameter Description	**Parameter Value**
Maximum slope for foundation-bearing stratum	20˚ from horizontal in untruncated strata
Safe-shutdown earthquake (SSE) ground motion	0.3 g peak ground acceleration
SSE (certified seismic design) horizontal ground response spectra	Regulatory Guide (RG) 1.60, enhanced spectra in high frequency range (See Figure 2.1-1)
SSE (certified seismic design) vertical ground response spectra	RG 1.60, enhanced spectra in high frequency range (See Figure 2.1-2)
Potential for surface tectonic deformation at site	None within the EAB
Subsurface stability – minimum allowable static bearing capacity	15,000 lb/ft^2
Subsurface stability – minimum allowable dynamic bearing capacity, normal conditions plus SSE	60,000 lb/ft^2
Subsurface stability – minimum shear wave velocity at SSE input at ground surface	1,000 ft/s
Subsurface stability – liquefaction potential	None (for seismic category I structures)
Total settlement of R/B complex foundation(14)(15)	6.0 in.
Differential settlement across R/B complex foundation(14)(15)	2.0 in.
Maximum differential settlement between buildings(14)(16)	0.5 in.
Maximum tilt of R/B complex foundation generated during operational life of the plant(14)(16)	1/2000

NOTES:

1. The specified missiles are assumed to have a vertical speed component equal to 2/3 of the horizontal speed.
2. These dispersion factors are chosen as the maximum values at all intake points.
3. These dispersion factors are chosen as the maximum values at all inleak points.
4. These dispersion factors are used for a loss-of-coolant accident (LOCA) and a rod ejection accident.
5. These dispersion factors are used for a loss-of-coolant accident (LOCA), a rod ejection accident, a failure of small lines carrying primary coolant outside containment and a fuel-handling accident inside the containment.
6. These dispersion factors are used for a steam generator (SG) tube rupture, a steam system piping failure, a reactor coolant pump (RCP) rotor seizure, and a rod ejection accident.
7. These dispersion factors are used for a fuel handling accident occurring in the fuel handling and storage area.
8. These dispersion factors are used for a steam system piping failure.
9. These dispersion factors are used for a LOCA.
10. These dispersion factors are used for a rod ejection accident, a failure of small lines carrying primary coolant outside containment and a fuel-handling accident inside the containment.
11. Normal winter precipitation roof load is determined by converting ground snow load p_g based on the highest ground-level weight of:
    - the 100-year return period snowpack,
    - the historical maximum snowpack,
    - the 100-year return period snowfall event, or
    - the historical maximum snowfall event in the site region.
12. The extreme winter precipitation roof load is based on the sum of the normal ground level winter precipitation plus the highest weight at ground level resulting from either the extreme frozen winter precipitation event or the extreme liquid winter precipitation event. The extreme frozen winter precipitation event is assumed to accumulate on the roof on top of the antecedent normal winter precipitation event. The extreme liquid winter precipitation event may not accumulate on the roof, depending on the geometry of the roof and the type of drainage provided. The extreme winter precipitation roof load is included as live load in extreme loading combinations using the applicable load factor indicated.
13. Deleted.
14. Acceptable parameters for settlement without further evaluation.
15. Settlements occurring during construction and operational life.
16. Settlements occurring during operational life only.

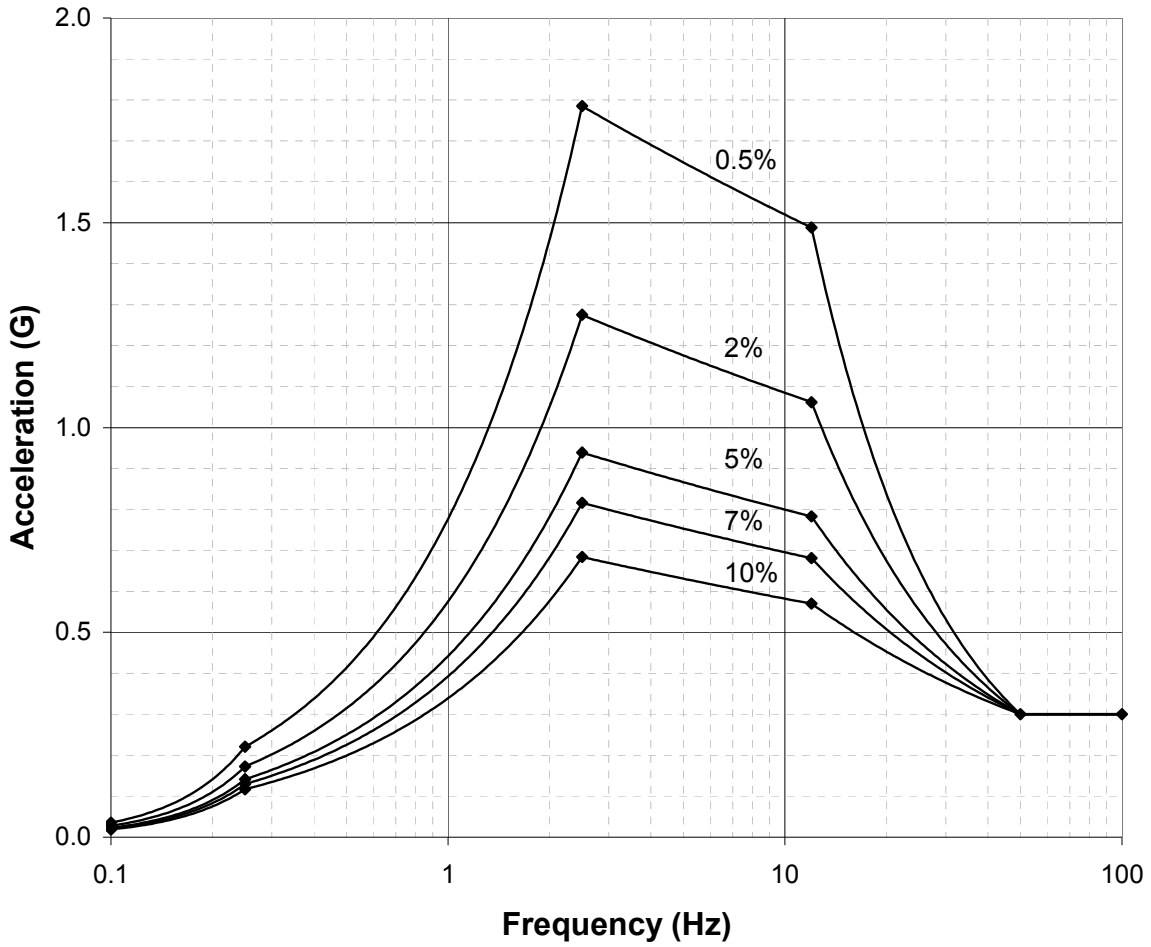

Note: spectra for damping 0.5, 2, 5, 7, 10%

Figure 2.1-1 US-APWR Certified Seismic Design Response Spectra (Horizontal)

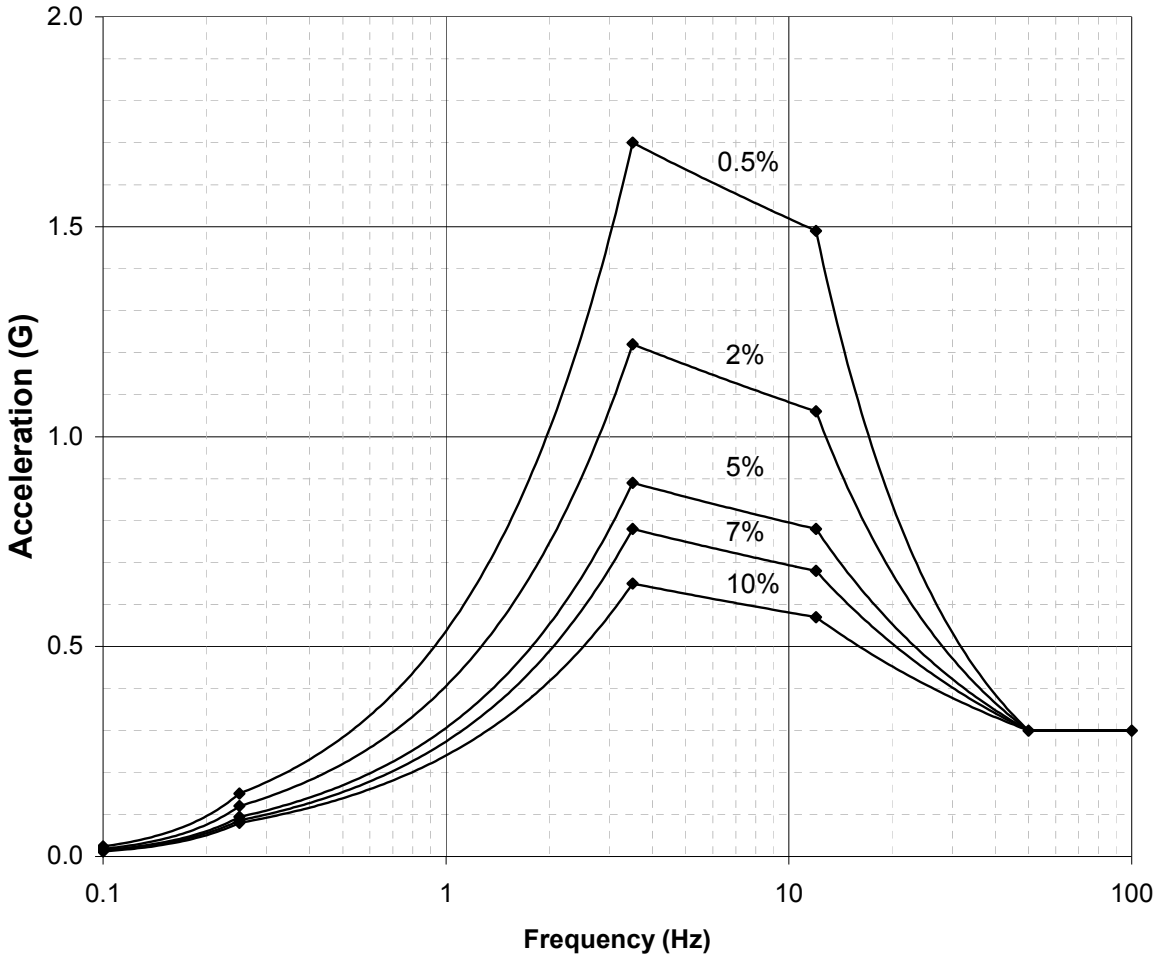

Note: spectra for damping 0.5, 2, 5, 7, 10%

Figure 2.1-2 US-APWR Certified Seismic Design Response Spectra (Vertical)

2.2 STRUCTURAL AND SYSTEMS ENGINEERING

2.2.1 Building Structures Design Description

The US-APWR includes the reactor building (R/B), which contains the prestressed concrete containment vessel (PCCV) and containment internal structure, two power source buildings (PS/Bs), power source fuel storage vaults (PSFSVs), auxiliary building (A/B), turbine building (T/B), access building (AC/B), and essential service water pipe tunnel (ESWPT). The seismic classifications for these structures are provided in Table 2.2-1.

Seismic Category I structures are designed and constructed to withstand design-basis loads without loss of structural integrity. Design basis loads are:

- Normal plant operation (including dead loads, live loads, lateral earth pressure loads, equipment loads, hydrodynamic loads, temperature, and equipment vibration)
- External events (including rain, snow, flood, tornado, tornado generated missiles, and earthquake)
- Internal events (including flood, pipe rupture, equipment failure, and equipment failure generated missiles).

2.2.1.1 Reactor Building (R/B)

The R/B has five main floors and contains the PCCV near its center. The R/B and PCCV are founded on a reinforced concrete common basemat, which is isolated from adjacent A/B, T/B, and PS/B basemats. The R/B roof, outer walls, and floor slabs are constructed of reinforced concrete.

The PCCV includes the containment vessel, internal structure, and the containment penetration area annulus to provide an efficient leak-tight barrier and environmental radiation protection under all postulated design basis conditions, including LOCA.

2.2.1.2 Prestressed Concrete Containment Vessel (PCCV)

The PCCV is a vertically oriented cylindrical structure topped by a hemispherical dome. The structural form transitions from a cylinder to a dome without the use of a ring girder. The PCCV shell is constructed of reinforced concrete, pre-stressed by use of un-bonded tendons, and has the capacity to accept limiting design basis temperature and pressure loads while retaining design margin to inelastic deformation.

The PCCV inner surface is lined with SA-516 grade 60 or equivalent carbon steel plate, which is anchored to the concrete shell and dome by concrete embedments to form a leaktight pressure boundary. The liner plate is not credited in structural design load capacity calculations. The minimum concrete design compressive strengths (f'c) for the PCCV and basemat are 6000 psi and 4000 psi, respectively. The PCCV internal

pressure load capacity is based on the cumulative yield strength of steel structural elements, such as concrete reinforcement bars and pre-stressing tendons.

2.2.1.3 Containment Internal Structure

The PCCV internal structure includes steel-concrete (SC) modules and provide support for reactor coolant system (RCS) components. SC module walls provide radiation shielding as well as sub-compartments within the PCCV.

2.2.1.4 Power Source Buildings (PS/Bs)

The two PS/Bs are located immediately adjacent to the R/B. These are freestanding buildings founded on separate reinforced concrete basemats.

2.2.1.5 Power Source Fuel Storage Vaults (PSFSVs)

The PSFSVs are reinforced concrete structures of a site-specific design that contain the fuel tanks for the emergency power generators.

2.2.1.6 Essential Service Water Pipe Tunnel (ESWPT)

The ESWPT is a reinforced concrete structure of a site-specific design that runs from beneath the T/B to the ultimate heat sink related structure (UHSRS). The ESWPT is isolated from other structures to prevent seismic structural interaction.

2.2.1.7 Auxiliary Building (A/B)

The A/B is located immediately adjacent to the R/B and is founded on a separate reinforced concrete basemat.

2.2.1.8 Turbine Building (T/B)

The T/B is located adjacent to the R/B and is founded on a separate reinforced concrete basemat.

2.2.1.9 Access Building (AC/B)

The AC/B is located adjacent to the A/B.

2.2.2 Protection Against Hazards

2.2.2.1 Internally Generated Missiles (Inside and Outside Containment)

One or more of the following methods provide missile protection for safety-related SSCs:

- Locating the system or component in a missile-proof structure
- Separating redundant systems or components

- Local missile shields and barriers
- Designing the system or component to withstand the impact of the most damaging missile
- Preventing missile generation
- Favorably orienting potential missile sources

2.2.3 System Structural Design

2.2.3.1 Piping Systems and Components

ITAAC for ASME Code, Section III piping systems and components are provided in Section 2.3. Section 2.3 also describes design considerations and related ITAAC to verify that safety-related SSCs can withstand the dynamic effects of pipe breaks.

1. The structural configurations of the R/B and each PS/B are as described in the Design Description of Subsection 2.2.1 and in Table 2.2-2, and as shown in Figures 2.2-1 through 2.2-13.

2. Deleted.

3. The PCCV retains structural integrity at the design pressure of 68 psig.

4.a. The integrated containment system barrier prevents the release of fission products to the atmosphere.

4.b. The containment system barrier penetrations prevent the release of fission products to the atmosphere.

5. The PCCV can withstand design-basis loads.

6. The seismic Category I buildings identified in Table 2.2-1, other than the PCCV, can withstand design-basis loads.

7. Deleted.

8. Deleted.

9. Divisional flood barriers are provided in the R/B and each PS/B to protect against internal flooding.

10. Water-tight doors are provided in the R/B and each PS/B to protect against internal flooding.

11. Penetrations in the divisional flood barriers of the R/B and each PS/B, as shown in Figures 2.2-14 through 2.2-25, (other than water-tight doors) that are at or

below the internal design flood level, as shown in Table 2.2-5, are fitted with water-tight seals.

12. Safety-related electrical, instrumentation, and control equipment in the R/B and each PS/B is located above the internal design flood level.

13. For the R/B and each PS/B, external walls below flood level are a minimum of two feet thick to protect against water seepage.

14. Penetrations in the external walls of the R/B and each PS/B, as shown in Figures 2.2-14 through 2.2-25, that are at or below design basis flood level, are fitted with water-tight seals to protect against external flooding.

15. Deleted.

16. Deleted.

17. Redundant safe shutdown components and associated electrical divisions outside the containment and the control room complex are separated by 3-hour rated fire barriers to preserve the capability to safely shutdown the plant following a fire.

18.a. Penetrations and openings, other than ventilation ducts, through fire barriers are protected against fire.

18.b. Ventilation ducts that penetrate fire barriers are protected by fire dampers.

19. Deleted.

20. Deleted.

21. Safety-related SSCs are protected from any credible internal missile sources inside and outside the containment.

22. Deleted.

23. The seismic Category II structures will not impair the ability of safety-related SSCs to perform their safety-related functions.

24. SSCs that require evaluation in the seismic fragilities task of a seismic margin analysis have high confidence of low probability of failure (HCLPF) values equal to or greater than the review level earthquake.

2.2.4 Inspection, Tests, Analyses, and Acceptance Criteria

Table 2.2-4 describes the ITAAC for structural and systems engineering.

Table 2.2-1 Seismic Classification of Structures (Note 1)

Structure	**Seismic Category** (Note 1)
Reactor Building (R/B)	I
Prestressed Concrete Containment Vessel (PCCV)	I
Containment Internal Structure	I
Power Source Building (PS/B)	I
Power Source Fuel Storage Vault (PSFSV)	I (Note 2)
Essential Service Water Pipe Tunnel (from/to UHS) (ESWPT)	I (Note 2)
Auxiliary Building (A/B)	II
Turbine Building (T/B)	II
Access Building (AC/B)	NS

NOTES:

1. Seismic Category I (I)
   Seismic Category II (II)
   Non-seismic (NS)

2. Designed to Seismic Category I codes and standards, but final structural design is based on site-specific requirements.

Table 2.2-2 Definition of Wall Thicknesses for Seismic Category I Structures: Containment Internal Structure, Reactor Building, and Power Source Building (Sheet 1 of 15)

Wall or Section Description	Column Lines[1]	Floor Elevation or Elevation Range[1]	Concrete Thickness[3]	Applicable Radiation Shielding Wall (Yes/No)
Containment Internal Structure (e.g., Primary Shield Wall, Secondary Shield Wall, Steam Generator Compartments, Pressurizer Compartment, Refueling Water Storage Pit, Refueling Cavity)				
Primary Shield Wall	Not Applicable	From -12’-6” to 35’-11”	9’-2”	Yes
Secondary Shield Wall	Not Applicable	From 3’-7” to 97’-9”	4’-0”	Yes
Secondary Shield Wall	Not Applicable	From 97’-9” to 112’-0”	4’-0”	Yes
Pressurizer Compartment	Not Applicable	From 58’-5” to 112’-4”	4’-0”	Yes
Pressurizer Compartment	Not Applicable	From 112’-4” to 139’-6”	3’-0”	Yes
Refueling Cavity	Not Applicable	From 34’-5” to 76’-5”	4’-8”	Yes
North side of Refueling Cavity	Not Applicable	From 34’-5” to 76’-5”	5’-7”	Yes

Table 2.2-2 Definition of Wall Thicknesses for Seismic Category I Structures: Containment Internal Structure, Reactor Building, and Power Source Building (Sheet 2 of 15)

Wall or Section Description	Column Lines(1)	Floor Elevation or Elevation Range(1)	Concrete Thickness(3)	Applicable Radiation Shielding Wall (Yes/No)
Refueling Water Storage Pit Wall	Not Applicable	From 1'-11" to 21'-11"	3'-3"	Yes
North side of floor	Not Applicable	25'-3"	3'-4"	No
South side of floor	Not Applicable	25'-3"	3'-4"	Yes
East side of floor	Not Applicable	25'-3"	4'-3"	No
West side of floor	Not Applicable	25'-3"	4'-3"	No
Floor	Not Applicable	50'-2"	1'-4"	Yes
Floor	Not Applicable	76'-5"	2'-0"	No
Reactor Building				
Fuel Storage and Handling Area (Spent Fuel Pit, New Fuel Pit, Cask Pit, Cask Washdown Pit, Fuel Inspection Pit)				
Column Line AR wall	From 1R to 2aR	From -26'-4" to 3'-7"	3'-4"	Yes
Column Line AR wall	From 2aR to 4R	From -26'-4" to -8'-7"	4'-0"	Yes

Table 2.2-2 Definition of Wall Thicknesses for Seismic Category I Structures: Containment Internal Structure, Reactor Building, and Power Source Building (Sheet 3 of 15)

Wall or Section Description	Column Lines(1)	Floor Elevation or Elevation Range(1)	Concrete Thickness	Applicable Radiation Shielding Wall (Yes/No)
Column Line AR wall	From 2aR to 4R	From -8'-7" to 3'-7"	3'-8"	Yes
Column Line AR wall	From 4R to 13'-2" east of 6aR	From -26'-4" to 3'-7"	3'-8"	Yes
Column Line AR wall	From 13'-2" east of 6aR to 8R	From -26'-4" to 3'-7"	3'-4"	Yes
Column Line AR wall	From 8R to 6'-8" east of 8aR	From -26'-4" to 3'-7"	4'-0"	Yes
Column Line AR wall	From 6'-8" east of 8aR to 11R	From -26'-4" to 3'-7"	3'-4"	Yes
Column Line AR wall	From 1R to 2aR	From 3'-7" to 25'-3"	3'-4"	Yes
Column Line AR wall	From 2aR to 4R	From 3'-7" to 25'-3"	3'-8"	Yes
Column Line AR wall	From 4R to 9'-4" east of 6aR	From 3'-7" to 25'-3"	7'-9"	Yes
Column Line AR wall	From 9'-4" east of 6aR to 11R	From 3'-7" to 25'-3"	3'-4"	Yes
Column Line AR wall	From 1R to 2aR	From 25'-3" to 50'-2"	3'-4"	Yes
Column Line AR wall	From 2aR to 4R	From 25'-3" to 50'-2"	5'-9"	Yes
Column Line AR wall	From 4R to 5aR	From 30'-1" to 76'-5"	7'-9"	Yes
Column Line AR wall	From 6R to 9'-4" east of 6aR	From 27'-4" to 76'-5"	7'-9"	Yes
Column Line AR wall	From 9'-4" east of 6aR to 11R	From 25'-3" to 50'-2"	3'-4"	Yes
Column Line AR wall	From 1R to 8'-3" east of 2bR	From 50'-2" to 76'-5"	3'-4"	Yes

Table 2.2-2 Definition of Wall Thicknesses for Seismic Category I Structures: Containment Internal Structure, Reactor Building, and Power Source Building (Sheet 4 of 15)

Wall or Section Description	Column Lines(1)	Floor Elevation or Elevation Range(1)	Concrete Thickness	Applicable Radiation Shielding Wall (Yes/No)
Column Line AR wall	From 5aR to 6R	From 50’-2” to 76’-5”	7’-9”	Yes
Column Line AR wall	From 9’-4” east of 6aR to 6’-8” east of 8R	From 48’-3” to 76’-5”	6’-10”	Yes
Column Line AR wall	From 6’-8” east of 8R to 11R	From 50’-2” to 76’-5”	3’-4”	Yes
Column Line AR wall	From 1R to 7’-1” east of 2bR	From 76’-5” to 101’-0”	3’-4”	Yes
Column Line AR wall	From 7’-1” east of 2bR to 11R	From 76’-5” to 154’-6”	1’-9”	Yes
Column Line 1R wall	From AR to CR	From -26’-4” to 50’-2”	3’-4”	Yes
Column Line 1R wall	From AR to CR	From 50’-2” to 76’-5”	2’-8”	Yes
Column Line 1R wall	From AR to CR	From 76’-5” to 101’-0”	2’-4”	Yes
Column Line 11R wall	From AR to CR	From -26’-4” to 3’-7”	3’-4”	Yes
Column Line 11R wall	From A2R to CR	From 3’-7” to 25’-3”	3’-4”	Yes
Column Line 11R wall	From AR to CR	From 25’-3” to 50’-2”	3’-4”	Yes
Column Line 11R wall	From AR to CR	From 50’-2” to 76’-5”	3’-4”	Yes
Column Line 11R wall	From AR to CR	From 76’-5” to 125’-8”	3’-4”	Yes
Column Line 11R wall	From AR to CR	From 125’-8” to 154’-6”	2’-0”	Yes
Floor	From AR to CR and 1R to 11R	-26’-4”	9’-11”	No

Table 2.2-2 Definition of Wall Thicknesses for Seismic Category I Structures: Containment Internal Structure, Reactor Building, and Power Source Building (Sheet 5 of 15)

Wall or Section Description	Column Lines[1]	Floor Elevation or Elevation Range[1]	Concrete Thickness	Applicable Radiation Shielding Wall (Yes/No)
Safety System Pumps Areas				
Column Line CR wall	From 1R to 2R	From -26'-4" to -8'-7"	3'-4"	No
Column Line CR wall	From 2R to 4bR	From -26'-4" to 3'-7"	3'-4"	Yes
Column Line CR wall	From 8R to 10R	From -26'-4" to 3'-7"	3'-4"	Yes
Column Line CR wall	From 10R to 11R	From -26'-4" to -8'-7"	3'-4"	No
Column Line CR wall	From 2R to 3'-4" east of 4aR	From 3'-7" to 15'-9"	3'-10"	Yes
Column Line CR wall	From 2R to 3'-4" east of 4aR	From 15'-9" to 25'-3"	3'-2"	Yes
Column Line CR wall	From 3'-4" east of 4aR to 10'-1" east of 8R	From 3'-7" to 25'-3"	3'-2"	Yes
Column Line CR wall	From 10'-1" east of 8R to 11R	From 3'-7" to 25'-3"	3'-10"	Yes
Column Line CR wall	From 1R to 4bR	From 25'-3" to 50'-2"	3'-2"	Yes
Column Line CR wall	From 4bR to 10'-5" east of 4bR	From 25'-3" to 50'-2"	3'-4"	Yes
Column Line CR wall	From 10'-5" east of 4bR to 6aR	From 25'-3" to 50'-2"	3'-10"	Yes
Column Line CR wall	From 6aR to 7aR	From 25'-3" to 50'-2"	3'-8"	Yes
Column Line CR wall	From 7aR to 2'-4" east of 8aR	From 25'-3" to 50'-2"	3'-2"	No
Column Line CR wall	From 2'-4" east of 8aR to 11R	From 25'-3" to 50'-2"	2'-0"	Yes

Table 2.2-2 Definition of Wall Thicknesses for Seismic Category I Structures: Containment Internal Structure, Reactor Building, and Power Source Building (Sheet 6 of 15)

Wall or Section Description	Column Lines(1)	Floor Elevation or Elevation Range(1)	Concrete Thickness	Applicable Radiation Shielding Wall (Yes/No)
Column Line CR wall	From 1R to 8'-3" east of 2bR	From 50'-2" to 76'-5"	2'-6"	Yes
Column Line CR wall	From 1R to 2R	From 76'-5" to 101'-0"	2'-8"	No
Column Line CR wall	From 3'-9" east of 2bR to 4bR	From 76'-5" to 101'-0"	2'-8"	Yes
Column Line CR wall	From 3'-9" east of 2bR to 4bR	From 101'-0" to 154'-6"	1'-9"	Yes
Column Line CR wall	From 4bR to 11R	From 76'-5" to 154'-6"	1'-9"	Yes
Column Line JR wall	From 1R to 5R	From -26'-4" to 3'-7"	3'-8"	Yes
Column Line JR wall	From 7R to 11R	From -26'-4" to 3'-7"	3'-8"	Yes
Column Line JR wall	From 1R to 11R	From 3'-7" to 26'-11"	3'-8"	Yes
Column Line JR wall	From 1R to 11R	From 26'-11" to 50'-2"	3'-4"	Yes
Column Line JR wall	From 1R to 5R	From 50'-2" to 76'-5"	3'-4"	No
Column Line JR wall	From 5R to 7R	From 50'-2" to 65'-0"	3'-4"	No
Column Line JR wall	From 7R to 11R	From 50'-2" to 76'-5"	3'-4"	No
Column Line JR wall	From 1R to 5R	From 76'-5" to 101'-0"	3'-4"	No
Column Line JR wall	From 7R to 11R	From 76'-5" to 101'-0"	3'-4"	No
Column Line 1R wall	From CR to JR	From -26'-4" to 3'-7"	3'-4"	Yes

Table 2.2-2 Definition of Wall Thicknesses for Seismic Category I Structures: Containment Internal Structure, Reactor Building, and Power Source Building (Sheet 7 of 15)

Wall or Section Description	Column Lines(1)	Floor Elevation or Elevation Range(1)	Concrete Thickness	Applicable Radiation Shielding Wall (Yes/No)
Column Line 1R wall	From CR to 12'-7" south of D2R	From 3'-7" to 25'-3"	3'-4"	Yes
Column Line 1R wall	From 12'-7" south of D2R to 10'-8" south of GR	From 3'-7" to 17'-8"	3'-4"	Yes
Column Line 1R wall	From 12'-7" south of D2R to 10'-8" south of GR	From 17'-8" to 25'-3"	4'-2"	Yes
Column Line 1R wall	From 10'-8" south of GR to JR	From 3'-7" to 25'-3"	3'-4"	Yes
Column Line 1R wall	From CR to 11'-11" south of D2R	From 25'-3" to 50'-2"	3'-4"	Yes
Column Line 1R wall	From 11'-11" south of D2R to 11'-4" south of GR	From 25'-3" to 42'-4"	3'-4"	Yes
Column Line 1R wall	From 11'-11" south of D2R to 11'-4" south of GR	From 42'-4" to 50'-2"	4'-2"	Yes
Column Line 1R wall	From 10'-8" south of GR to JR	From 25'-3" to 50'-2"	3'-4"	Yes
Column Line 1R wall	From CR to 15'-7" south of HR	From 50'-2" to 76'-5"	2'-8"	Yes
Column Line 1R wall	From 15'-7" south of HR to JR	From 50'-2" to 76'-5"	3'-4"	No
Column Line 1R wall	From CR to JR	From 76'-5" to 101'-0"	2'-4"	Yes
Column Line 2R wall	From CR to 8'-7" south of CR	From -26'-4" to -8'-7"	3'-4"	Yes
Column Line 2R wall	From 17'-7" south of CR to 6'-10" south of D2R	From -26'-4" to -8'-7"	2'-8"	Yes
Column Line 2R wall	From 16'-5" south of GR to 15'-7" south of HR	From -26'-4" to -8'-7"	2'-8"	Yes

Table 2.2-2 Definition of Wall Thicknesses for Seismic Category I Structures: Containment Internal Structure, Reactor Building, and Power Source Building (Sheet 8 of 15)

Wall or Section Description	Column Lines(1)	Floor Elevation or Elevation Range(1)	Concrete Thickness	Applicable Radiation Shielding Wall (Yes/No)
Column Line 2R wall	From 4'-1" south of H1R to JR	From -26'-4" to 3'-7"	5'-0"	Yes
Column Line 2R wall	From CR to 6'-10" south of D2R	From -8'-7" to 3'-7"	3'-4"	Yes
Column Line 2R wall	From 16'-5" south of GR to 4'-1" south of H1R	From -8'-7" to 3'-7"	3'-4"	Yes
Column Line 2R wall	From CR to DR	From 3'-7" to 25'-3"	3'-10"	Yes
Column Line 2R wall	From DR to ER	From 3'-7" to 25'-3"	3'-6"	Yes
Column Line 2R wall	From ER to GR	From 3'-7" to 17'-8"	2'-8"	Yes
Column Line 2R wall	From ER to GR	From 17'-8" to 25'-3"	4'-2"	Yes
Column Line 2R wall	From GR to HR	From 3'-7" to 25'-3"	3'-6"	Yes
Column Line 2R wall	From HR to JR	From 3'-7" to 25'-3"	3'-10"	Yes
Column Line 2R wall	From CR to DR	From 25'-3" to 50'-2"	3'-2"	Yes
Column Line 2R wall	From DR to ER	From 25'-3" to 50'-2"	3'-10"	Yes
Column Line 2R wall	From ER to GR	From 25'-3" to 50'-2"	2'-8"	Yes
Column Line 2R wall	From GR to HR	From 25'-3" to 50'-2"	3'-10"	Yes
Column Line 2R wall	From HR to H1R	From 25'-3" to 50'-2"	2'-8"	No
Column Line 2R wall	From CR to H1R	From 50'-2" to 76'-5"	2'-8"	Yes

Table 2.2-2 Definition of Wall Thicknesses for Seismic Category I Structures: Containment Internal Structure, Reactor Building, and Power Source Building (Sheet 9 of 15)

Wall or Section Description	Column Lines(1)	Floor Elevation or Elevation Range(1)	Concrete Thickness	Applicable Radiation Shielding Wall (Yes/No)
Column Line 2R wall	From CR to DR	From 76’-5” to 101’-0”	2’-8”	No
Column Line 2R wall	From DR to ER	From 76’-5” to 101’-0”	3’-8”	Yes
Column Line 2R wall	From ER to 9’-5” south of G1R	From 76’-5” to 101’-0”	2’-8”	Yes
Column Line 10R wall	From CR to 8’-7” south of CR	From -26’-4” to -8’-7”	3’-4”	Yes
Column Line 10R wall	From 5-9” south of C1R to 11’-3” south of D1R	From -26’-4” to -8’-7”	2’-8”	Yes
Column Line 10R wall	From 16’-5” south of GR to 13’-7” south of HR	From -26’-4” to -8’-7”	2’-8”	Yes
Column Line 10R wall	From 4’-1“ south of H1R to JR	From -26’-4” to 3’-7”	5’-0”	Yes
Column Line 10R wall	From CR to 11’-3” south of D1R	From -8’-7” to 3’-7”	3’-4”	Yes
Column Line 10R wall	From 16’-5” south of GR to 4’-1” south of H1R	From -8’-7” to 3’-7”	3’-4”	Yes
Column Line 10R wall	From CR to DR	From 3’-7” to 25’-3”	3’-10”	Yes
Column Line 10R wall	From DR to ER	From 3’-7” to 25’-3”	3’-6”	Yes
Column Line 10R wall	From ER to GR	From 3’-7” to 17’-8”	2’-8”	Yes
Column Line 10R wall	From ER to GR	From 17’-8” to 25’-3”	4’-2”	Yes
Column Line 10R wall	From GR to HR	From 3’-7” to 25’-3”	3’-6”	Yes
Column Line 10R wall	From HR to JR	From 3’-7” to 25’-3”	3’-10”	Yes

Table 2.2-2 Definition of Wall Thicknesses for Seismic Category I Structures: Containment Internal Structure, Reactor Building, and Power Source Building (Sheet 10 of 15)

Wall or Section Description	Column Lines(1)	Floor Elevation or Elevation Range(1)	Concrete Thickness	Applicable Radiation Shielding Wall (Yes/No)
Column Line 10R wall	From CR to DR	From 25’-3” to 50’-2”	2’-8”	No
Column Line 10R wall	From DR to ER	From 25’-3” to 50’-2”	3’-10”	Yes
Column Line 10R wall	From ER to GR	From 25’-3” to 50’-2”	2’-8”	Yes
Column Line 10R wall	From GR to HR	From 25’-3” to 50’-2”	3’-10”	Yes
Column Line 10R wall	From HR to H1R	From 25’-3” to 50’-2”	2’-8”	No
Column Line 10R wall	From CR to H1R	From 50’-2” to 76’-5”	2’-8”	Yes
Column Line 10R wall	From D1R to ER	From 76’-5” to 112’-0”	2’-8”	No
Column Line 10R wall	From ER to GR	From 76’-5” to 101’-0”	2’-8”	Yes
Column Line 10R wall	From GR to H1R	From 76’-5” to 101’-0”	3’-8”	Yes
Column Line 11R wall	From CR to JR	From -26’-4” to 3’-7”	3’-4”	Yes
Column Line 11R wall	From CR to 17’-0” south of D1R	From 3’-7” to 25’-3”	3’-4”	Yes
Column Line 11R wall	From 17’-0” south of D1R to 10’-8” south of GR	From 3’-7” to 17’-8”	3’-4”	Yes
Column Line 11R wall	From 17’-0” south of D1R to 10’-8” south of GR	From 17’-8” to 25’-3”	4’-2”	Yes
Column Line 11R wall	From 10’-8” south of GR to HR	From 3’-7” to 25’-3”	3’-4”	Yes
Column Line 11R wall	From HR to JR	From 3’-7” to 76’-5”	5’-0”	Yes

Table 2.2-2 Definition of Wall Thicknesses for Seismic Category I Structures: Containment Internal Structure, Reactor Building, and Power Source Building (Sheet 11 of 15)

Wall or Section Description	Column Lines(1)	Floor Elevation or Elevation Range(1)	Concrete Thickness	Applicable Radiation Shielding Wall (Yes/No)
Column Line 11R wall	From CR to 16’-4” south of D1R	From 25’-3” to 50’-2”	3’-4”	Yes
Column Line 11R wall	From 16’-4” south of D1R to 11-4” south of GR	From 25’-3” to 42’-4”	3’-4”	Yes
Column Line 11R wall	From 16’-4” south of D1R to 11-4” south of GR	From 42’-4” to 50’-2”	4’-2”	Yes
Column Line 11R wall	From 11’-4” south of GR to HR	From 25’-3” to 50’-2”	3’-4”	Yes
Column Line 11R wall	From CR to HR	From 50’-2” to 76’-5”	2’-8”	Yes
Column Line 11R wall	From D1R to ER	From 76’-5” to 112’-0”	2’-4”	Yes
Column Line 11R wall	From ER to HR	From 76’-5” to 101’-0”	2’-4”	Yes
Column Line 11R wall	From HR to JR	From 76’-5” to 101’-0”	5’-0”	No
Floor	From CR to JR and 1R to 2R	-26’-4”	9’-11”	No
Floor	From CR to JR and 10R to 11R	-26’-4”	9’-11”	No
Floor	From CR to JR and 1R to 2R	3’-7”	2’-8”	No
Floor	From CR to JR and 10R to 11R	3’-7”	2’-8”	No
Floor	From ER to GR and 1R to 2R	25’-3”	3’-10”	Yes
Floor	From ER to GR and 10R to 11R	25’-3”	3’-10”	Yes
Floor	From ER to GR and 1R to 2R	50’-2”	3’-10”	Yes

Table 2.2-2 Definition of Wall Thicknesses for Seismic Category I Structures: Containment Internal Structure, Reactor Building, and Power Source Building (Sheet 12 of 15)

Wall or Section Description	Column Lines(1)	Floor Elevation or Elevation Range(1)	Concrete Thickness	Applicable Radiation Shielding Wall (Yes/No)
Floor	From ER to GR and 10R to 11R	50’-2”	3’-10”	Yes
Floor	From CR to GR and 1R to 2R	76’-5”	2’-4”	No
Floor	From GR to HR and 1R to 2R	76’-5”	2’-8”	Yes
Floor	From CR to HR and 10R to 11R	76’-5”	3’-4”	Yes
Floor	From CR to GR and 1R to 2R	101’-0”	1’-3”	Yes
Floor	From 4’-0” south of CR to ER and 10R to 11R	112’-0”	1’-3”	Yes
Non-Radiological Control Area				
Column Line LR wall	From 1R to 11R	From -26’-4” to 3’-7”	3’-8”	No
Column Line LR wall	From 1R to 3aR	From 3’-7” to 26’-11”	3’-8”	No
Column Line LR wall	From 3aR to 8bR	From 3’-7” to 25’-3”	3’-8”	No
Column Line LR wall	From 8bR to 11R	From 3’-7” to 26’-11”	3’-8”	No
Column Line LR wall	From 1R to 3aR	From 26’-11” to 50’-2”	3’-4”	No
Column Line LR wall	From 3aR to 8bR	From 25’-3” to 50’-2”	3’-4”	Yes
Column Line LR wall	From 8bR to 11R	From 26’-11” to 50’-2”	3’-4”	No
Column Line LR wall	From 1R to 5R	From 50’-2” to 76’-5”	3’-4”	No

Table 2.2-2 Definition of Wall Thicknesses for Seismic Category I Structures: Containment Internal Structure, Reactor Building, and Power Source Building (Sheet 13 of 15)

Wall or Section Description	Column Lines[1]	Floor Elevation or Elevation Range[1]	Concrete Thickness	Applicable Radiation Shielding Wall (Yes/No)
Column Line LR wall	From 5R to 7R	From 50’-2” to 65’-0”	3’-4”	No
Column Line LR wall	From 7R to 11R	From 50’-2” to 76’-5”	3’-4”	No
Column Line LR wall	From 1R to 5R	From 76’-5” to 115’-6”	3’-4”	No
Column Line LR wall	From 5R to 7R	From 65’-0” to 115’-6”	4’-4”	No
Column Line LR wall	From 7R to 11R	From 76’-5” to 115’-6”	3’-4”	No
Column Line 1R wall	From JR to KR	From -26’-4” to 101’-0”	3’-4”	No
Column Line 1R wall	From KR to LR	From -26’-4” to 115’-6”	3’-4”	No
Column Line 11R wall	From JR to KR	From -26’-4” to 101’-0”	3’-4”	No
Column Line 11R wall	From KR to LR	From -26’-4” to 115’-6”	3’-4”	No
Floor	From JR to LR and 1R to 11R	-26’-4”	9’-11”	No
Floor	From JR to LR and 1R to 11R	3’-7”	4’-0”	No
Floor	From JR to LR and 1R to 3R	26’-11”	2’-4”	No
Floor	From JR to LR and 5R to 7R	25’-3”	3’-4”	Yes
Floor	From JR to LR and 9R to 11R	26’-11”	2’-4”	No
Floor	From JR to LR and 1R to 5R	50’-2”	2’-4”	No

Table 2.2-2 Definition of Wall Thicknesses for Seismic Category I Structures: Containment Internal Structure, Reactor Building, and Power Source Building (Sheet 14 of 15)

Wall or Section Description	Column Lines(1)	Floor Elevation or Elevation Range(1)	Concrete Thickness	Applicable Radiation Shielding Wall (Yes/No)
Floor	From JR to LR and 5R to 7R	50’-2”	3’-4”	Yes
Floor	From JR to LR and 7R to 11R	50’-2”	2’-4”	No
Floor	From JR to KR and 1R to 5R	76’-5”	2’-4”	No
Floor	From KR to LR and 1R to 5R	76’-5”	4’-4”	No
Floor	From JR to KR and 7R to 11R	76’-5”	2’-4”	No
Floor	From KR to LR and 7R to 11R	76’-5”	4’-4”	No
Floor	From JR to KR and 1R to 5R	101’-0”	2’-4”	No
Floor	From JR to KR and 7R to 11R	101’-0”	2’-4”	No

Table 2.2-2 Definition of Wall Thicknesses for Seismic Category I Structures: Containment Internal Structure, Reactor Building, and Power Source Building (Sheet 15 of 15)

Wall or Section Description	Column Lines[1]	Floor Elevation or Elevation Range[1]	Concrete Thickness	Applicable Radiation Shielding Wall (Yes/No)
Power Source Buildings				
Column Line AP wall	From 1P to 5P	From -26'-4" to 3'-7"	2'-8"	No
Column Line CP wall	From 1P to 5P	From -26'-4" to 3'-7"	2'-8"	No
Column Line 1P wall	From AP to CP	From -26'-4" to 3'-7"	2'-8"	No
Column Line 5P wall	From AP to CP	From -26'-4" to 3'-7"	2'-8"	No
Column Line AP wall	From 1P to 5P	From 3'-7" to 39'-6"	1'-9"	No
Column Line CP wall	From 1P to 5P	From 3'-7" to 39'-6"	1'-9"	No
Column Line 1P wall	From AP to CP	From 3'-7" to 39'-6"	1'-9"	No
Column Line 5P wall	From AP to CP	From 3'-7" to 39'-6"	2'-8"	No
Floor	From AP to CP and 1P to 5P	-26'-4"	9'-11"	No
Floor	From AP to CP and 1P to 2P	3'-7"	3'-4"	No
Floor	From AP to CP and 2P to 5P	3'-7"	2'-8"	No
Floor	From AP to CP and 1P to 5P	39'-6"	1'-3"	No

NOTES:

1. The column lines and floor elevations are identified and included on Figures 2.2-3 through 2.2-13.
2. Deleted.
3. For walls that are part of structural modules, the concrete thickness also includes the steel face plates.

Table 2.2-3 Main Components Protected against External Floods, Internal Floods and Internal Fires

Safe Shutdown Function	Main Component
Reactivity Control	Safety injection pump
	Emergency letdown line isolation valve
	Safety depressurization valve
RCS Pressure Control	Pressurizer backup heater
	Safety depressurization valve
Decay Heat Removal and RCS Cooling	Emergency feedwater pump
	Main steam depressurization valve
	Containment spray/Residual heat removal pump
	Containment spray/Residual heat removal heat exchanger
	Component cooling water pump
	Essential service water pump
RCS Inventory Control	Safety injection pump

Table 2.2-4 Structural and Systems Engineering Inspections, Tests, Analyses, and Acceptance Criteria (Sheet 1 of 4)

Design Commitment	Inspections, Tests, Analyses	Acceptance Criteria
1. The structural configurations of the R/B and each PS/B are as described in the Design Description of Subsection 2.2.1 and in Table 2.2-2, and as shown in Figures 2.2-1 through 2.2-13.	1. Inspections will be performed to verify that the as-built R/B and each PS/B conform to the structural configurations as described in the Design Description of Subsection 2.2.1 and in Table 2.2-2, and as shown in Figures 2.2-1 through 2.2-13.	1. The as-built R/B and each PS/B conform to the structural configurations as described in the Design Description of Subsection 2.2.1 and in Table 2.2-2, and as shown in Figures 2.2-1 through 2.2-13, with the following construction tolerances. 1) Thickness of exterior walls below plant grade: +12 inches/- 1 inch 2) Thickness of exterior walls above plant grade, and interior walls: +1/-1 inch 3) Thickness of floors: +1/-1 inch 4) Floor level: +1/-1 inch
2. Deleted.	2. Deleted.	2. Deleted.
3. The PCCV retains structural integrity at the design pressure of 68 psig.	3. A structural integrity test (SIT) of the as-built PCCV will be performed in accordance with Article CC-6000 of ASME code, Section III, Division 2.	3. The PCCV maintains its structural integrity at a test pressure of greater than or equal to 115% of the design pressure of 68 psig in accordance with the requirements of ASME Code, Section III.
4.a The integrated containment system barrier prevents the release of fission products to the atmosphere.	4.a A containment integrated leak rate test will be performed in accordance with 10 CFR 50, Appendix J, Type A testing.	4.a The containment integrated leak rate is less than or equal to the allowable leakage rate specified in 10 CFR 50, Appendix J, for Type A testing.
4.b The containment system barrier penetrations prevent the release of fission products to the atmosphere.	4.b Type B testing will be performed for all containment penetrations in accordance with 10 CFR 50, Appendix J.	4.b The containment penetration leak rates are less than or equal to the allowable leakage rate specified in 10 CFR 50, Appendix J, for Type B testing.
5. The PCCV can withstand design-basis loads.	5. An analysis will be performed to reconcile the as-built PCCV with the structural design-basis loads.	5. Reports exist and conclude that the as-built PCCV can withstand design-basis loads.
6. The seismic Category I buildings identified in Table 2.2-1, other than the PCCV, can withstand design-basis loads.	6. An analysis will be performed to reconcile the as-built seismic Category I buildings identified in Table 2.2-1, other than the PCCV, with the structural design-basis loads.	6. Reports exist and conclude that the as-built seismic Category I buildings identified in Table 2.2-1, other than the PCCV, can withstand design-basis loads.
7. Deleted.	7. Deleted.	7. Deleted.
8. Deleted.	8. Deleted.	8. Deleted.

Table 2.2-4 Structural and Systems Engineering Inspections, Tests, Analyses, and Acceptance Criteria (Sheet 2 of 4)

Design Commitment	Inspections, Tests, Analyses	Acceptance Criteria
9. Divisional flood barriers are provided in the R/B and each PS/B to protect against internal flooding.	9. An inspection will be performed to verify that the as-built divisional flood barriers in the R/B and each PS/B exist, as shown in Figures 2.2-14 through 2.2-25.	9. The as-built divisional flood barriers in the R/B and each PS/B that protect against the internal flooding exist, as shown in Figures 2.2-14 through 2.2-25.
10. Water-tight doors are provided in the R/B and each PS/B to protect against internal flooding.	10. An inspection will be performed to verify that the as-built water-tight doors in the R/B and each PS/B exist, as shown on Figures 2.2-14 through 2.2-25.	10. The as-built water-tight doors in the R/B and each PS/B that protect against internal flooding exist, as shown on Figures 2.2-14 through 2.2-25.
11. Penetrations in the divisional flood barriers of the R/B and each PS/B, as shown in Figures 2.2-14 through 2.2-25, (other than water-tight doors) that are at or below the internal flood level, as shown in Table 2.2-5, are fitted with water-tight seals.	11. An inspection will be performed to verify that the as-built penetrations in the divisional flood barriers of the R/B and each PS/B, as shown in Figures 2.2-14 through 2.2-25, (other than water-tight doors) that are at or below the internal design flood level, as shown in Table 2.2-5, are fitted with water-tight seals.	11. The as-built penetrations in the divisional flood barriers of the R/B and each PS/B, as shown in Figures 2.2-14 through 2.2-25, (other than water-tight doors) that are at or below the internal design flood level, as shown in Table 2.2-5, are fitted with water-tight seals.
12. Safety-related electrical, instrumentation, and control equipment in the R/B and each PS/B is located above the internal design flood level.	12. An inspection will be performed to verify that the as-built safety-related electrical, instrumentation, and control equipment in the R/B and each PS/B is located above the internal design flood level, as shown in Table 2.2-5.	12. The as-built safety-related electrical, instrumentation, and control equipment in the R/B and each PS/B is located above the internal design flood level, as shown in Table 2.2-5.
13. For the R/B and each PS/B, external walls below flood level are a minimum of two feet thick to protect against water seepage.	13. An inspection will be performed to verify that the as-built external walls below flood level for the R/B and each PS/B are a minimum of two feet thick.	13. For the R/B and each PS/B, the as-built external walls below flood level are a minimum of two feet thick to protect against water seepage.

Table 2.2-4 Structural and Systems Engineering Inspections, Tests, Analyses, and Acceptance Criteria (Sheet 3 of 4)

Design Commitment	Inspections, Tests, Analyses	Acceptance Criteria
14. Penetrations in the external walls of the R/B and each PS/B, as shown in Figures 2.2-14 through 2.2-25, that are at or below design basis flood level, are fitted with water-tight seals to protect against external flooding.	14. An inspection will be performed to verify that as-built penetrations in the external walls of the R/B and each PS/B, as shown in Figures 2.2-14 through 2.2-25, that are at or below design basis flood level, are fitted with water-tight seals.	14. The as-built penetrations in the external walls of the R/B and each PS/B, as shown in Figures 2.2-14 through 2.2-25, that are at or below design basis flood level, are fitted with water-tight seals to protect against external flooding.
15. Deleted.	15. Deleted.	15. Deleted.
16. Deleted.	16. Deleted.	16. Deleted.
17. Redundant safe shutdown components and associated electrical divisions outside the containment and the control room complex are separated by 3-hour rated fire barriers to preserve the capability to safely shutdown the plant following a fire.	17. An inspection will be performed to verify that the as-built 3-hour rated fire barriers are placed as required by the FHA.	17. The as-built 3-hour rated fire barriers are placed as required by the FHA for separation of redundant safe shutdown components and associated electrical divisions outside the containment and the control room complex, and to preserve the capability to safely shutdown the plant following a fire.
18.a. Penetrations and openings, other than ventilation ducts, through fire barriers are protected against fire.	18.a An inspection will be performed to verify that the as-built penetrations and openings, other than ventilation ducts, through fire barriers identified in the FHA are sealed or can be closed with fire rated components consistent with the fire resistance rating of the associated barrier.	18.a. As-built penetrations and openings , other than ventilation ducts, through fire barriers identified in the FHA are sealed or can be closed with fire rated components (e.g., fire doors in door openings and penetration seals) consistent with the fire resistance rating of the associated barrier.
18.b Ventilation ducts that penetrate fire barriers are protected by fire dampers.	18.b An inspection will be performed to verify that fire dampers are installed in the as-built ventilation ducts that penetrate the fire barriers identified in the FHA.	18.b Fire dampers are installed in the as-built ventilation ducts that penetrate the fire barriers identified in the FHA.
19. Deleted.	19. Deleted.	19. Deleted.
20. Deleted.	20. Deleted.	20. Deleted.

Table 2.2-4 Structural and Systems Engineering Inspections, Tests, Analyses, and Acceptance Criteria (Sheet 4 of 4)

Design Commitment	Inspections, Tests, Analyses	Acceptance Criteria
21. Safety-related SSCs are protected from any credible internal missile sources inside and outside the containment.	21. Inspections and analyses will be performed to verify that as-built safety-related SSCs are protected from credible internal missile sources by the methods described in Section 2.2.2.1.	21. A report exists and concludes that as-built safety-related SSCs are protected from credible internal missile sources by the methods described in Section 2.2.2.1.
22. Deleted.	22. Deleted.	22. Deleted.
23. The seismic Category II structures will not impair the ability of safety-related SSCs to perform their safety-related functions.	23. Analyses and inspections of the design and as-built configuration of seismic Category II structures will be performed to verify that these structures will not impair the ability of safety-related SSCs to perform their safety-related functions.	23. A report exists and concludes that the as-built seismic Category II structures will not impair the ability of safety-related SSCs to perform their safety-related functions.
24. SSCs that require evaluation in the seismic fragilities task of a seismic margin analysis have high confidence of low probability of failure (HCLPF) values equal to or greater than the review level earthquake.	24.i Analyses will be performed to verify that the SSCs requiring evaluation in the seismic fragilities task of a seismic margin assessment have HCLPF values equal to or greater than the review level earthquake.	24.i Reports exist and conclude that the SSCs evaluated in the seismic fragilities task of the seismic margin assessment have HCLPF values equal to or greater than the review level earthquake.
	24.ii Inspection and analysis will be performed to verify that as-built SSCs requiring evaluation in the seismic fragilities task of a seismic margin assessment are bounded by conditions used in the assessment.	24.ii A report exists and concludes that the as-built SSCs requiring evaluation in the seismic fragilities task of a seismic margin assessment are bounded by the conditions used in the assessment.

Table 2.2-5 Internal Flooding Elevation above Floor (Sheet 1 of 8)

	Building	Floor Elevation	Fire Zone No.	Design Flood Level above Floor [ft]	Notes
1	R/B	-26'-4"	FA2-101-01	0.45	-
2	R/B	-26'-4"	FA2-102-01	0.45	-
3	R/B	-26'-4"	FA2-103-01	0.45	-
4	R/B	-26'-4"	FA2-104-01	0.45	-
5	R/B	-26'-4"	FA2-105-01	0.45	-
6	R/B	-26'-4"	FA2-111-01	0.45	-
7	R/B	-26'-4"	FA2-106-01	0.6	-
8	R/B	-26'-4"	FA2-107-01	0.6	-
9	R/B	-26'-4"	FA2-108-01	0.6	-
10	R/B	-26'-4"	FA2-109-01	0.6	-
11	R/B	-26'-4"	FA2-110-01	0.6	-
12	R/B	-26'-4"	FA2-112-01	0.6	-
13	R/B	-26'-4"	FA2-113-04	1.24	-
14	R/B	-26'-4"	FA2-121-01	1.24	-
15	R/B	-26'-4"	FA2-121-02	1.24	-
16	R/B	-26'-4"	FA2-122-01	1.24	-
17	R/B	-26'-4"	FA2-118-01	2.27	-
18	R/B	-26'-4"	FA2-119-01	2.27	-
19	R/B	-26'-4"	FA2-124-01	2.27	-
20	R/B	-26'-4"	FA2-125-01	2.27	-
21	R/B	-26'-4"	FA2-126-01	2.27	-
22	R/B	-26'-4"	FA2-127-01	2.27	-
23	R/B	-26'-4"	FA2-129-01	2.27	-
24	R/B	-26'-4"	FA2-130-01	2.27	-
25	R/B	-26'-4"	FA2-113-01	-	1
26	R/B	-26'-4"	FA2-113-02	-	1
27	R/B	-26'-4"	FA2-113-03	-	1
28	R/B	-26'-4"	FA2-114-01	-	1

Table 2.2-5 Internal Flooding Elevation above Floor (Sheet 2 of 8)

	Building	Floor Elevation	Fire Zone No.	Design Flood Level above Floor [ft]	Notes
29	R/B	-26'-4"	FA2-114-02	-	1
30	R/B	-26'-4"	FA2-114-03	-	1
31	R/B	-26'-4"	FA2-115-01	-	1
32	R/B	-26'-4"	FA2-115-02	-	1
33	R/B	-26'-4"	FA2-115-03	-	1
34	R/B	-26'-4"	FA2-116-01	-	1
35	R/B	-26'-4"	FA2-116-02	-	1
36	R/B	-26'-4"	FA2-116-03	-	1
37	R/B	-26'-4"	FA2-123-02	-	4
38	R/B	-8'-7"	FA2-127-02	0.81	-
39	R/B	-8'-7"	FA2-127-03	0.81	-
40	R/B	-8'-7"	FA2-127-04	0.81	-
41	R/B	-8'-7"	FA2-127-05	0.81	-
42	R/B	-8'-7"	FA2-128-01	0.81	-
43	R/B	-8'-7"	FA2-153-02	0.81	-
44	R/B	-8'-7"	FA2-154-02	1.35	-
45	R/B	-8'-7"	FA2-155-01	1.35	-
46	R/B	-8'-7"	FA2-151-01	-	1
47	R/B	-8'-7"	FA2-152-01	-	1
48	R/B	-8'-7"	FA2-153-01	-	1
49	R/B	-8'-7"	FA2-154-01	-	1
50	R/B	3'-7"	FA2-151-04	0.69	-
51	R/B	3'-7"	FA2-209-01	0.69	-
52	R/B	3'-7"	FA2-209-02	0.69	-
53	R/B	3'-7"	FA2-209-03	0.69	-
54	R/B	3'-7"	FA2-210-10	0.69	-
55	R/B	3'-7"	FA2-211-01	0.69	-
56	R/B	3'-7"	FA2-127-06	0.88	-

Table 2.2-5 Internal Flooding Elevation above Floor (Sheet 3 of 8)

	Building	Floor Elevation	Fire Zone No.	Design Flood Level above Floor [ft]	Notes
57	R/B	3'-7"	FA2-128-02	0.88	-
58	R/B	3'-7"	FA2-128-03	0.88	-
59	R/B	3'-7"	FA2-128-04	0.88	-
60	R/B	3'-7"	FA2-152-04	0.88	-
61	R/B	3'-7"	FA2-212-01	0.88	-
62	R/B	3'-7"	FA2-201-01	3.14	-
63	R/B	3'-7"	FA2-206-01	3.14	-
64	R/B	3'-7"	FA2-151-01	-	1
65	R/B	3'-7"	FA2-151-02	-	1
66	R/B	3'-7"	FA2-151-03	-	1
67	R/B	3'-7"	FA2-152-01	-	1
68	R/B	3'-7"	FA2-152-02	-	1
69	R/B	3'-7"	FA2-152-03	-	1
70	R/B	3'-7"	FA2-153-01	-	1
71	R/B	3'-7"	FA2-153-03	-	1
72	R/B	3'-7"	FA2-153-04	-	1
73	R/B	3'-7"	FA2-154-01	-	1
74	R/B	3'-7"	FA2-154-03	-	1
75	R/B	3'-7"	FA2-154-04	-	1
76	R/B	3'-7"	FA2-202-01	-	1
77	R/B	3'-7"	FA2-203-01	-	1
78	R/B	3'-7"	FA2-204-01	-	1
79	R/B	3'-7"	FA2-205-01	-	1
80	R/B	3'-7"	FA2-207-01	-	4
81	R/B	3'-7"	FA2-208-01	-	4
82	R/B	13'-6"	FA2-127-07	-	2,3
83	R/B	13'-6"	FA2-212-02	-	2,3
84	R/B	25'-3"	FA2-151-05	0.53	-

Table 2.2-5 Internal Flooding Elevation above Floor (Sheet 4 of 8)

	Building	Floor Elevation	Fire Zone No.	Design Flood Level above Floor [ft]	Notes
85	R/B	25'-3"	FA2-151-06	0.53	-
86	R/B	25'-3"	FA2-154-05	0.53	-
87	R/B	25'-3"	FA2-154-06	0.53	-
88	R/B	25'-3"	FA2-209-04	0.53	-
89	R/B	25'-3"	FA2-210-10	0.53	-
90	R/B	25'-3"	FA2-316-01	0.53	-
91	R/B	25'-3"	FA2-319-01	0.53	-
92	R/B	25'-3"	FA2-323-01	0.53	-
93	R/B	25'-3"	FA2-323-02	0.53	-
94	R/B	25'-3"	FA2-127-08	0.69	-
95	R/B	25'-3"	FA2-152-05	0.69	-
96	R/B	25'-3"	FA2-152-06	0.69	-
97	R/B	25'-3"	FA2-153-05	0.69	-
98	R/B	25'-3"	FA2-209-05	0.69	-
99	R/B	25'-3"	FA2-210-12	0.69	-
100	R/B	25'-3"	FA2-317-01	0.69	-
101	R/B	25'-3"	FA2-318-01	0.69	-
102	R/B	25'-3"	FA2-322-01	0.69	-
103	R/B	25'-3"	FA2-321-01	2.85	-
104	R/B	25'-3"	FA2-320-01	3.14	-
105	R/B	25'-3"	FA2-302-01	-	1
106	R/B	25'-3"	FA2-303-01	-	1
107	R/B	25'-3"	FA2-304-01	-	1
108	R/B	25'-3"	FA2-307-01	-	1
109	R/B	25'-3"	FA2-308-01	-	1
110	R/B	25'-3"	FA2-308-02	-	1
111	R/B	25'-3"	FA2-309-01	-	1
112	R/B	25'-3"	FA2-312-01	-	1

Table 2.2-5 Internal Flooding Elevation above Floor (Sheet 5 of 8)

	Building	Floor Elevation	Fire Zone No.	Design Flood Level above Floor [ft]	Notes
113	R/B	25'-3"	FA2-313-01	-	1
114	R/B	25'-3"	FA2-314-01	-	1
115	R/B	25'-3"	FA2-210-11	-	1,2
116	R/B	35'-2"	FA2-210-13	-	1,2
117	R/B	50'-2"	FA2-209-06	0.58	-
118	R/B	50'-2"	FA2-209-07	0.58	-
119	R/B	50'-2"	FA2-210-10	0.58	-
120	R/B	50'-2"	FA2-408-01	0.58	-
121	R/B	50'-2"	FA2-409-01	0.58	-
122	R/B	50'-2"	FA2-416-01	0.58	-
123	R/B	50'-2"	FA2-421-01	0.58	-
124	R/B	50'-2"	FA2-210-14	0.76	-
125	R/B	50'-2"	FA2-410-01	0.76	-
126	R/B	50'-2"	FA2-411-01	0.76	-
127	R/B	50'-2"	FA2-417-01	0.76	-
128	R/B	50'-2"	FA2-418-01	0.76	-
129	R/B	50'-2"	FA2-422-01	0.76	-
130	R/B	50'-2"	FA2-403-01	0.86	-
131	R/B	50'-2"	FA2-404-01	0.86	-
132	R/B	50'-2"	FA2-406-01	0.86	-
133	R/B	50'-2"	FA2-407-03	0.86	-
134	R/B	50'-2"	FA2-413-01	0.86	-
135	R/B	50'-2"	FA2-419-01	0.86	-
136	R/B	50'-2"	FA2-423-01	0.86	-
137	R/B	50'-2"	FA2-401-01	0.87	-
138	R/B	50'-2"	FA2-402-01	0.87	-
139	R/B	50'-2"	FA2-405-01	0.87	-
140	R/B	50'-2"	FA2-412-01	0.87	-

Table 2.2-5 Internal Flooding Elevation above Floor (Sheet 6 of 8)

	Building	Floor Elevation	Fire Zone No.	Design Flood Level above Floor [ft]	Notes
141	R/B	50'-2"	FA2-420-01	0.87	-
142	R/B	50'-2"	FA2-420-02	0.87	-
143	R/B	50'-2"	FA2-414-01	4.51	-
144	R/B	50'-2"	FA2-415-01	4.51	-
145	R/B	76'-5"	FA2-210-15	0.84	-
146	R/B	76'-5"	FA2-210-19	0.84	-
147	R/B	76'-5"	FA2-409-02	0.84	-
148	R/B	76'-5"	FA2-506-01	0.84	-
149	R/B	76'-5"	FA2-210-16	0.99	-
150	R/B	76'-5"	FA2-210-17	0.99	-
151	R/B	76'-5"	FA2-210-18	0.99	-
152	R/B	76'-5"	FA2-210-21	0.99	-
153	R/B	76'-5"	FA2-410-02	0.99	-
154	R/B	76'-5"	FA2-511-01	0.99	-
155	R/B	76'-5"	FA2-505-01	1.24	-
156	R/B	76'-5"	FA2-508-01	1.24	-
157	R/B	76'-5"	FA2-508-02	1.24	-
158	R/B	76'-5"	FA2-509-01	1.24	-
159	R/B	76'-5"	FA2-510-01	1.24	-
160	R/B	76'-5"	FA2-510-02	1.24	-
161	R/B	76'-5"	FA2-507-01	1.5	-
162	R/B	76'-5"	FA2-507-02	1.5	-
163	R/B	76'-5"	FA2-513-01	1.5	-
164	R/B	76'-5"	FA2-502-01	-	1
165	R/B	76'-5"	FA2-503-01	-	1
166	R/B	76'-5"	FA2-504-01	-	1
167	R/B	76'-5"	FA2-501-02	-	5
168	R/B	76'-5"	FA2-512-01	-	5

Table 2.2-5 Internal Flooding Elevation above Floor (Sheet 7 of 8)

	Building	Floor Elevation	Fire Zone No.	Design Flood Level above Floor [ft]	Notes
169	R/B	101'-0"	FA2-601-01	1.71	-
170	R/B	101'-0"	FA2-601-02	1.71	-
171	R/B	101'-0"	FA2-603-01	1.71	-
172	R/B	101'-0"	FA2-602-01	3.08	-
173	R/B	101'-0"	FA2-604-01	3.08	-
174	PS/B	-26'-4"	FA3-101-01	0.45	-
175	PS/B	-26'-4"	FA3-102-01	0.45	-
176	PS/B	-26'-4"	FA3-103-01	0.45	-
177	PS/B	-26'-4"	FA3-104-01	0.45	-
178	PS/B	-26'-4"	FA3-106-01	0.45	-
179	PS/B	-26'-4"	FA3-115-01	0.45	-
180	PS/B	-26'-4"	FA3-116-01	0.45	-
181	PS/B	-26'-4"	FA3-108-01	0.6	-
182	PS/B	-26'-4"	FA3-109-01	0.6	-
183	PS/B	-26'-4"	FA3-110-01	0.6	-
184	PS/B	-26'-4"	FA3-111-01	0.6	-
185	PS/B	-26'-4"	FA3-112-01	0.6	-
186	PS/B	-26'-4"	FA3-120-01	0.6	-
187	PS/B	-26'-4"	FA3-121-01	0.6	-
188	PS/B	-14'-2"	FA3-117-01	-	1
189	PS/B	-14'-2"	FA3-118-01	-	1
190	PS/B	-14'-2"	FA3-122-01	-	1
191	PS/B	-14'-2"	FA3-123-01	-	1
192	PS/B	-14'-2"	FA3-103-02	-	3
193	PS/B	-14'-2"	FA3-104-02	-	3
194	PS/B	-14'-2"	FA3-105-01	-	3
195	PS/B	-14'-2"	FA3-105-02	-	3
196	PS/B	-14'-2"	FA3-105-03	-	3

Table 2.2-5 Internal Flooding Elevation above Floor (Sheet 8 of 8)

	Building	Floor Elevation	Fire Zone No.	Design Flood Level above Floor [ft]	Notes
197	PS/B	-14'-2"	FA3-109-02	-	3
198	PS/B	-14'-2"	FA3-111-02	-	3
199	PS/B	-14'-2"	FA3-113-01	-	3
200	PS/B	-14'-2"	FA3-113-03	-	3
201	PS/B	-14'-2"	FA3-119-01	-	3
202	PS/B	-14'-2"	FA3-124-01	-	3
203	PS/B	-14'-2"	FA3-125-01	-	3
204	PS/B	-14'-2"	FA3-126-01	-	3
205	PS/B	3'-7"	FA3-103-03	-	1
206	PS/B	3'-7"	FA3-104-03	-	1
207	PS/B	3'-7"	FA3-105-02	-	1
208	PS/B	3'-7"	FA3-109-03	-	1
209	PS/B	3'-7"	FA3-111-03	-	1
210	PS/B	3'-7"	FA3-113-02	-	1

Note:

1. This area is protected from flooding by water-tight door.
2. There are no SSCs in this area to be protected from flooding.
3. Water flows down stairs.
4. No water source inside and no pathway of water to the neighboring zones.
5. This area is the emergency water pit and is out of scope of flood protection.

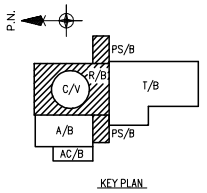

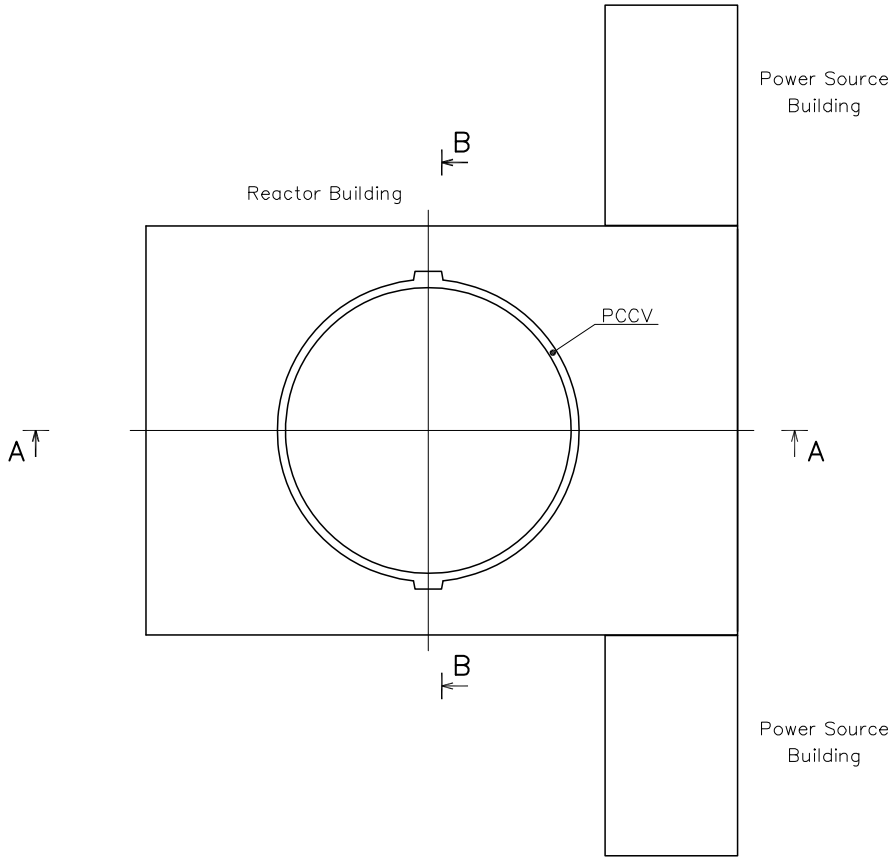

Figure 2.2-1 US-APWR Building Configuration (Plan View)

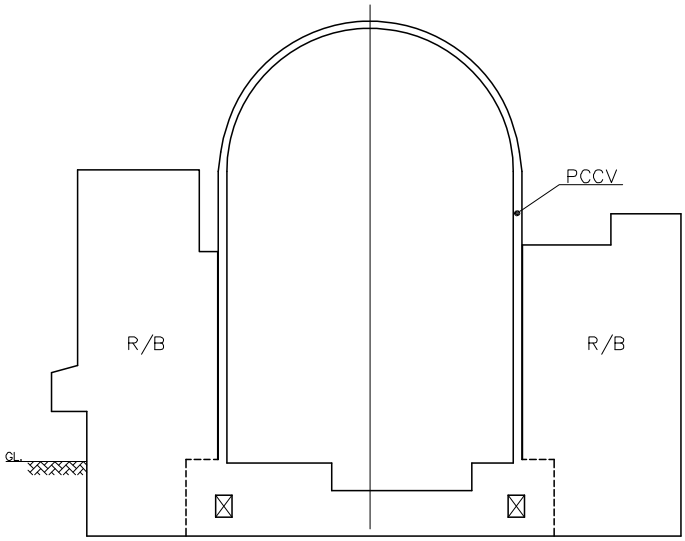

A – A

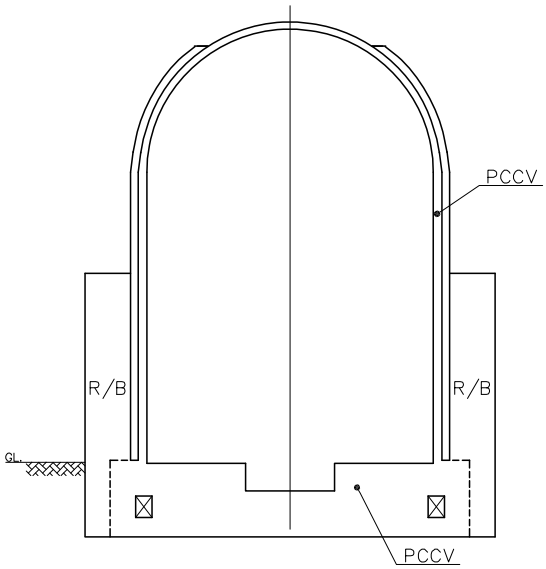

B – B

Figure 2.2-2 US-APWR Building Configuration (Section Views)

Security-Related Information – Withheld Under 10 CFR 2.390

Figure 2.2-3 US-APWR Building Architectural Layout R/B Plan View Elevation -26'-4"

Security-Related Information – Withheld Under 10 CFR 2.390

Figure 2.2-4 US-APWR Building Architectural Layout R/B Plan View Elevation 3'-7"

Security-Related Information – Withheld Under 10 CFR 2.390

Figure 2.2-5 US-APWR Building Architectural Layout R/B Plan View Elevation 25’-8”

Security-Related Information – Withheld Under 10 CFR 2.390

Figure 2.2-6 US-APWR Building Architectural Layout R/B Plan View Elevation 50’-2”

Security-Related Information – Withheld Under 10 CFR 2.390

Figure 2.2-7 US-APWR Building Architectural Layout R/B Plan View Elevation 76'-5"

Security-Related Information – Withheld Under 10 CFR 2.390

Figure 2.2-8 US-APWR Building Architectural Layout R/B Plan View Elevation 101'-0"

Security-Related Information – Withheld Under 10 CFR 2.390

Figure 2.2-9 US-APWR Building Architectural Layout R/B Plan View Elevation 115’-6”

Security-Related Information – Withheld Under 10 CFR 2.390

Figure 2.2-10 US-APWR Building Architectural Layout R/B Section View Section "A-A"

Security-Related Information – Withheld Under 10 CFR 2.390

Figure 2.2-11 US-APWR Building Architectural Layout R/B Section View Section "B-B"

Security-Related Information – Withheld Under 10 CFR 2.390

Figure 2.2-12 US-APWR Building Architectural Layout PS/Bs Plan View Elevation -26'-4",3'-7",39'-6"

Security-Related Information – Withheld Under 10 CFR 2.390

Figure 2.2-13 US-APWR Building Architectural Layout PS/B Section View Section "A-A"

Security-Related Information – Withheld Under 10 CFR 2.390

Figure 2.2-14 Flood barriers and water-tight doors R/B EL -26'-4" (B1F)

Security-Related Information – Withheld Under 10 CFR 2.390

Figure 2.2-15 Flood barriers and water-tight doors R/B EL -8'-7" (B1MF)

Security-Related Information – Withheld Under 10 CFR 2.390

Figure 2.2-16 Flood barriers and water-tight doors R/B EL 3’-7” (1F)

Security-Related Information – Withheld Under 10 CFR 2.390

Figure 2.2-17 Flood barriers and water-tight doors R/B EL 13'-6" (1MF)

Security-Related Information – Withheld Under 10 CFR 2.390

Figure 2.2-18 Flood barriers and water-tight doors R/B EL 25'-3" (2F)

Security-Related Information – Withheld Under 10 CFR 2.390

Figure 2.2-19 Flood barriers and water-tight doors R/B EL 35'-2" (2MF)

Security-Related Information – Withheld Under 10 CFR 2.390

Figure 2.2-20 Flood barriers and water-tight doors R/B EL 50’-2” (3F)

Security-Related Information – Withheld Under 10 CFR 2.390

Figure 2.2-21 Flood barriers and water-tight doors R/B EL 76’-5” (4F)

Security-Related Information – Withheld Under 10 CFR 2.390

Figure 2.2-22 Flood barriers and water-tight doors R/B EL 101'-0" (Roof)

Security-Related Information – Withheld Under 10 CFR 2.390

Figure 2.2-23 Flood barriers and water-tight doors R/B EL 115'-6" (Roof)

Security-Related Information – Withheld Under 10 CFR 2.390

Figure 2.2-24 Flood barriers and water-tight doors PS/B EL -26'-4" (B1F), EL -14'-2" (B1MF)

Security-Related Information – Withheld Under 10 CFR 2.390

Figure 2.2-25 Flood barriers and water-tight doors PS/B EL 3'-7" (1F), EL 24'-2" (1MF), EL 39'-6" (Roof)

2.3 PIPING SYSTEMS AND COMPONENTS

2.3.1 Design Description

The standard plant design addresses four areas related to piping systems and components (PSC): (1) piping stress analysis, (2) protection against the dynamic effects of pipe rupture, (3) the leak-before-break (LBB) aspects of the design of piping systems, and (4) component stress analysis.

Piping Stress Analysis

Piping and piping supports are analyzed and designed to the requirements of the ASME Code Section III, based on Code classification and ASME Service Level. The requirements of ASME Code Section III, Subsections NB (Class 1), NC (Class 2), or ND (Class 3) are used in the piping stress analysis. Stress analysis of piping and supports considers design basis loads and load combinations applicable to each system. ASME Code Section III, Class 1 piping subject to fatigue analysis is evaluated for failure over the design life of the plant.

Table 2.3-3 lists systems that have ASME Code Section III, Class 1, 2 and 3 piping and piping supports.

Protection against the Dynamic Effects of Piping Rupture

The standard plant is designed for protection against piping failure inside or outside the containment to ensure that such a failure would not compromise the functional capability of safety-related systems to shut down safely and maintain in a safe, cold shutdown condition without offsite power. The design includes consideration of high-energy and moderate-energy fluid system piping located inside and outside of the containment. The design also maintains habitability of the MCR, and protects containment penetrations (and associated isolation valves) against the dynamic effects of piping rupture.

Pipe breaks (circumferential and longitudinal) are evaluated for the entire range of effects, including dynamic effects (i.e., pipe whip, jet impingement, jet thrust forces, internal forces due to system decompression, sub-compartment pressurization), environmental conditions, spray wetting, and flooding. When LBB criteria are successfully applied, evaluation of dynamic effects is not required.

Table 2.3-1 lists high- and moderate-energy piping systems that are evaluated for the dynamic effects of piping failures.

Leak-Before-Break (LBB)

LBB evaluations are performed for selected high-energy piping, described below, to demonstrate that for the piping that meets the LBB criteria, sudden catastrophic failure is not credible. When evaluations demonstrate that the probability of rupture of such piping is extremely low, consideration of the dynamic effects of pipe rupture is eliminated from

the design basis for such piping. The LBB evaluations consider normal and abnormal loads and load combinations to demonstrate compliance with the LBB design criteria.

Lines identified below for systems listed in Table 2.3-3 meet the LBB criteria or an evaluation is performed of the dynamic effects of a rupture of the line:

- Reactor coolant piping
- Reactor coolant piping branch piping with nominal diameter of 6 inches or larger, except for the steam piping for the pressurizer safety valves and power operated relief valves
- Main steam pipe in PCCV

Component Stress Analysis

Components, component supports, and core support structures are analyzed and designed to the requirements of the ASME Code Section III, based on Code classification and ASME Service Level. The requirements of the ASME Code Section III, Subsections NB (Class 1), NC (Class 2), or ND (Class 3) code are used in component stress analysis. Stress analysis of components considers design basis loads and load combinations applicable to each system. Component supports and their attachments for ASME Code Class 1, 2, and 3 components are designed in accordance with ASME Code Section III, Subsection NF up to the interface with a building's structure, with jurisdictional boundaries as defined by Subsection NF. The requirements of the ASME Code Section III, Subsection NG are used in core support structure stress analysis. Additionally, ASME Code Section III, Class 1 pressure boundary components are subject to fatigue usage evaluations over the design life of the plant.

Table 2.3-3 lists systems that have ASME Code Section III, Class 1, 2 and 3 components, component supports and core support structures.

1.a The ASME Code Section III, Class 1 piping systems and components (PSC), for systems identified in Table 2.3-3, are designed to retain their pressure integrity and functional capability under internal design and operating pressures and design basis loads.

1.b The usage factors for ASME Code Section III Class 1 PSC, for systems identified in Table 2.3-3, are evaluated for both air and reactor coolant environments.

2.a Reactor coolant piping, pressurizer surge line piping and main steam piping in the PCCV, for systems identified in Table 2.3-3, are designed in accordance with the LBB method.

2.b Portions of the high-energy piping, for systems identified in Table 2.3-3, except reactor coolant piping, pressurizer surge line piping and main steam piping in the PCCV, are designed in accordance with the LBB method.

3. The ASME Code Section III, Class 2 and 3 PSC, for systems identified in Table 2.3-3, are designed to retain their pressure integrity and functional capability under internal design and operating pressures and design basis loads.

4. Safety-related SSCs are designed to be protected against or qualified to withstand the dynamic and environmental effects associated with analyses of postulated failures in high-energy piping and moderate-energy piping systems identified in Table 2.3-1 so that the reactor can be shut down safely and maintained in a safe, cold shutdown condition without offsite power.
5. Safety-related SSCs are reconciled with the analyses results of as-designed pipe break hazard analysis report(s).

2.3.2 Inspections, Tests, Analyses, and Acceptance Criteria

Table 2.3-2 describes the design ITAAC for piping systems and components.

Table 2.3-1 High and Moderate Energy Piping System Considered for Protection of Essential Systems[1]

System	High-Energy	Moderate-Energy
Reactor coolant system (RCS)	X	–
Chemical and volume control system (CVCS)	X	–
Safety injection system (SIS)	X	–
Residual heat removal system (RHRS[2])	–	X
Emergency feedwater system (EFWS)[2]	–	X
Feedwater system (FWS)	X	–
Main steam supply system (MSS)	X	–
Containment spray system (CSS)	–	X
Component cooling water system (CCWS)	–	X
Spent fuel pit cooling and purification system (SFPCS)	–	X
Essential service water system (ESWS)	–	X
Gaseous waste management system (GWMS)	–	X
Liquid waste management system (LWMS)	–	X
Solid waste management system (SWMS)	–	X
Process and Post-accident sampling system (PSS)	X	–
Steam generator blowdown system (SGBDS)	X	–
Refueling water storage system (RWS)	–	X
Primary wakeup water system (PMWS)	–	X
Auxiliary steam supply system (ASSS)	X	–
Instrument air system (IAS)	–	X
Fire protection water supply system (FSS)	–	X
Station service air system (SSAS)	–	X
Essential chilled water system (ECWS)	–	X
Non-essential chilled water system (non-ECWS)	–	X

NOTES:

1. High-energy piping includes those systems or portions of systems in which the maximum normal operating temperature exceeds 200°F or the maximum normal operating pressure exceeds 275 psig. Piping systems or portions of systems pressurized above atmospheric pressure during normal plant conditions and not identified as high-energy are considered as moderate-energy. Piping systems that exceed 200°F or 275 psig for 2% or less of the time during which the system is in operation are considered moderate-energy.
2. The RHRS and EFWS lines are classified as moderate-energy based on the 2% rule. These lines experience high-energy conditions for less than 2% of the system operation time. The portions of the RHRS from the connections to the RCS to the first closed valve in each line are high-energy.

Table 2.3-2 Piping Systems and Components Inspections, Tests, Analyses, and Acceptance Criteria (Sheet 1 of 3)

Design Commitment	Inspections, Tests, Analyses	Acceptance Criteria
1.a The ASME Code Section III, Class 1 piping systems and components (PSC), for systems identified in Table 2.3-3, are designed to retain their pressure integrity and functional capability under internal design and operating pressures and design basis loads.	1.a.i An inspection of the stress report(s) for the ASME Code, Section III, Class 1 piping and valves, for systems identified in Table 2.3-3, will be performed.	1.a.i The stress report(s) exist and conclude that the design of the ASME Code Section III Class 1 piping and valves, for systems identified in Table 2.3-3, comply with the requirements of the ASME Code Section III.
	1.a.ii An inspection of the stress report for the ASME Code, Section III, Class 1 components, except valves, for systems identified in Table 2.3-3, will be performed.	1.a.ii The stress report(s) exist and conclude that the design of the ASME Code Section III Class 1 components, except valves, for systems identified in Table 2.3-3, comply with the requirements of the ASME Code Section III.
1.b The usage factors for ASME Code Section III Class 1 PSC , for systems identified in Table 2.3-3, are evaluated for both air and reactor coolant environments.	1.b.i An analysis of the ASME Code, Section III, Class 1 piping and valves, for systems identified in Table 2.3-3, except for reactor coolant loop piping and pressurizer surge line piping, will be performed.	1.b.i Report(s) exist and conclude that the usage factors for ASME Code Section III Class 1 piping and valves, for systems identified in Table 2.3-3, except reactor coolant piping and pressurizer surge line piping, are evaluated for air and reactor coolant environments.
	1.b.ii An analysis of the ASME Code, Section III, Class 1 components and reactor coolant piping and pressurizer surge line piping for, systems identified in Table 2.3-3, will be performed.	1.b.ii Report(s) exist and conclude that the usage factors for ASME Code Section III Class 1 components and reactor coolant piping and pressurizer surge line piping, for systems identified in Table 2.3-3, are evaluated for air and reactor coolant environments.

Table 2.3-2 Piping Systems and Components Inspections, Tests, Analyses, and Acceptance Criteria (Sheet 2 of 3)

Design Commitment	Inspections, Tests, Analyses	Acceptance Criteria
2.a Reactor coolant piping, pressurizer surge line piping and main steam piping in the PCCV, for systems identified in Table 2.3-3, are designed in accordance with the LBB method.	2.a A LBB analysis using the LBB method will be performed for each reactor coolant piping, pressurizer surge line piping and main steam piping in the PCCV, for systems identified in Table 2.3-3.	2.a The results of the LBB analysis for each reactor coolant piping, pressurizer surge line piping and main steam piping in the PCCV, for systems identified in Table 2.3-3, conclude that the stress values conform to the LBB acceptance criteria using the LBB assumptions.
2.b Portions of the high-energy piping, for systems identified in Table 2.3-3, except reactor coolant piping, pressurizer surge line piping and main steam piping in the PCCV, are designed in accordance with the LBB method.	2.b A LBB analysis using the LBB method will be performed for portions of the high-energy piping, for systems identified in Table 2.3-3, except reactor coolant piping, pressurizer surge line piping and main steam piping in the PCCV.	2.b The results of the LBB analysis for portions of the high-energy piping, for systems identified in Table 2.3-3, except reactor coolant piping, pressurizer surge line piping and main steam piping in the PCCV conclude that the stress values conform to the LBB acceptance criteria using the LBB assumptions.
3. The ASME Code Section III, Class 2 and 3 PSC, for systems identified in Table 2.3-3, are designed to retain their pressure integrity and functional capability under internal design and operating pressures and design basis loads.	3.i An inspection of the stress report(s) for the ASME Code, Section III, Class 2 and 3 PSC, for systems identified in Table 2.3-3, except for the accumulators, main steam piping in the PCCV, safety injection pumps, CS/RHR pumps, charging pumps, emergency feedwater pumps (motor driven), emergency feedwater pumps (turbine driven) and component cooling water pumps, will be performed	3.i The stress report(s) exist and conclude that the design of the ASME Code Section III Class 2 and 3 PSC, for systems identified in Table 2.3-3, except for the accumulators, main steam piping in the PCCV, safety injection pumps, CS/RHR pump, charging pumps, emergency feedwater pumps (motor driven), emergency feedwater pumps (turbine driven) and component cooling water pumps, comply with the requirements of ASME Code Section III.
	3.ii An inspection of the stress report(s) for the accumulators, main steam piping in the PCCV, safety injection pumps, CS/RHR pumps, charging pumps, emergency feedwater pumps (motor driven), emergency feedwater pumps (turbine driven) and component cooling water pumps will be performed.	3.ii The stress report(s) exist and conclude that the design of the accumulators, main steam piping in the PCCV, safety injection pump, CS/RHR pumps, charging pumps, emergency feedwater pumps (motor driven), emergency feedwater pumps (turbine driven) and component cooling water pumps comply with the requirements of ASME Code Section III.

Table 2.3-2 Piping Systems and Components Inspections, Tests, Analyses, and Acceptance Criteria (Sheet 3 of 3)

Design Commitment	Inspections, Tests, Analyses	Acceptance Criteria
4. Safety-related SSCs are designed to be protected against or are qualified to withstand the dynamic and environmental effects associated with analyses of postulated failures in high-energy piping and moderate-energy piping systems identified in Table 2.3-1 so that the reactor can be shut down safely and maintained in a safe, cold shutdown condition without offsite power.	4.i Dynamic effects analysis will be performed for the high-energy piping systems identified in Table 2.3-1. The analysis includes the evaluation of pipe whip and jet impingement.	4.i Pipe break hazard analysis report(s) exist and conclude that for each postulated piping failure for the high-energy piping systems identified in Table 2.3-1: (A) piping stresses in the containment penetration area are within allowable stress limits, (B) pipe whip restraints and jet shield designs can mitigate pipe break loads, and (C) loads on safety-related SSCs are within design load limits.
	4.ii Environmental effects analysis will be performed for the high-energy piping and moderate-energy piping systems identified in Table 2.3-1. The analysis includes the evaluation for wetting from spray, flooding, room pressurization, and temperature effects, as applicable.	4.ii Pipe break hazard analysis report(s) exist and conclude that for each postulated piping failure of the high-energy and moderate-energy systems identified in Table 2.3-1, the safety related SSCs are protected against or are qualified to withstand the environmental effects of postulated failures.
5. Safety-related SSCs are reconciled with the analyses results of as-designed pipe break hazard analysis report(s).	5. A reconciliation analysis of the as-built high-energy piping and moderate-energy piping using as-designed pipe break hazard analysis report(s) and as-built information will be performed.	5. Pipe break hazard analysis report(s) exist and conclude that the as-built high-energy piping systems including the protective features and moderate-energy piping systems are installed in the as-built plant as described in the as-designed pipe break hazard analysis report(s).

Table 2.3-3
Systems with ASME Code Section III, Class 1, 2 and 3 Piping Systems and Components

Tier 1 Section	System Name	ASME Code Section III			LBB
		1	2	3	
2.4.1	Reactor Systems	X	-	-	-
2.4.2	Reactor Coolant System	X	X	-	X
2.4.4	Emergency Core Cooling System	X	X	-	X
2.4.5	Residual Heat Removal System	X	X	X	X
2.4.6	Chemical and Volume Control System	X	X	X	-
2.6.4	Emergency Power Source	-	-	X	-
2.7.1.2	Main Steam Supply System	-	X	X	X
2.7.1.9	Condensate and Feedwater System	-	X	X	-
2.7.1.10	Steam Generator Blowdown System	-	X	X	-
2.7.1.11	Emergency Feedwater System	-	X	X	-
2.7.3.1	Essential Service Water System	-	-	X	-
2.7.3.3	Component Cooling Water System	-	X	X	-
2.7.3.5	Essential Chilled Water System	-	-	X	-
2.7.3.6	Non-Essential Chilled Water System	-	X	X	-
2.7.6.3	Spent Fuel Pit Cooling and Purification System	-	-	X	-
2.7.6.4	Light Load Handling System	-	X	-	-
2.7.6.7	Process and Post-accident Sampling System	-	X	-	-
2.7.6.8	Equipment and Floor Drainage System	-	-	X	-
2.11.2	Containment Isolation System	-	X	X	-
2.11.3	Containment Spray System	-	X	-	-

NOTE:
Dash (-) indicates not applicable.

2.4 REACTOR SYSTEMS

2.4.1 Reactor System

2.4.1.1 Design Description

The reactor system is a safety-related system that (1) generates heat by controlled nuclear fission which is transferred to the circulating reactor coolant, (2) provides barriers to contain radioactivity associated with reactor operation, and (3) provides the primary means for controlling reactivity and shutting down the reactor.

The reactor system includes the reactor internals (consisting of upper and lower assemblies), the fuel assemblies, the control rods, the reactor vessel, in-core thermocouples and neutron detectors, and the control rod drive mechanisms (CRDMs). The reactor vessel has no penetrations located below the top of the reactor core and is supported by eight steel support pads, which are integral with the nozzles.

Reactivity is controlled by the use of rod cluster control assemblies and soluble boron in the primary coolant. Following reactor trip, loss of electrical power to the CRDM coils unlatches each drive rod, so each rod cluster control assembly drops by gravity to the fully inserted position. The fuel assembly is designed to preclude damage during normal operation or during anticipated operational occurrences.

1. Deleted

2. Deleted

3. The functional arrangement of the reactor vessel and internals is as described in the Design Description of Subsection 2.4.1.1 and as shown in Figure 2.4.1-1, Figure 2.4.1-2, and Figure 2.4.1-3.

4.a Deleted

4.b The low alloy steel materials of construction used for the reactor vessel pressure retaining parts satisfy the fracture toughness requirements of 10 CFR 50 Appendix G and ASME Code Section III.

5.a The ASME Code Section III components of the reactor system, identified in Table 2.4.1-1, are fabricated, installed and inspected in accordance with ASME Code Section III requirements.

5.b The ASME Code Section III components of the reactor system identified in Table 2.4.1-1 are reconciled with the design requirements.

6. Pressure boundary welds in ASME Code Section III components, identified in Table 2.4.1-1, meet ASME Code Section III requirements for non-destructive examination of welds.

7. The ASME Code Section III components, identified in Table 2.4.1-1, retain their pressure boundary integrity at their design pressure.

8. The seismic Category I equipment identified in Table 2.4.1-1 can withstand seismic design basis loads without loss of safety function.

9. The reactor internals can withstand flow-induced vibration.

10. The Class 1E equipment identified in Table 2.4.1-1 as being qualified for a harsh environment can withstand the environmental conditions that would exist before, during, and following a design basis accident without loss of safety function for the time required to perform the safety function.

11. Class 1E equipment, identified in Table 2.4.1-1, is powered from its respective Class 1E division.

12. Separation is provided between redundant divisions of reactor system Class 1E cables, and between Class 1E cables and non-Class 1E cables.

13. Displays identified in Table 2.4.1-1 are provided in the MCR.

14. Irradiation specimen guides are attached to the core barrel to hold capsules with material surveillance specimens.

2.4.1.2 Inspections, Tests, Analyses, and Acceptance Criteria

Table 2.4.1-2 describes the ITAAC for the reactor system.

Table 2.4.1-1 Equipment Key Attributes

Equipment[1]	Tag #	ASME Code Section III Class	Seismic Category	Class 1E/ Qual. for Harsh Envir	S-VDU Display
Fuel assemblies (257)	—	None	I	No	No
Rod cluster control assemblies (69)	—	None	I	No	No
Core support structures	—	CS	I	No	No
RCCA guide tubes (69)	—	None	I	No	No
Reactor vessel, including all nozzles	—	1	I	No	No
Reactor vessel head	—	1	I	No	No
Reactor vessel head stud bolt assemblies (58)	—	1	I	No	No
CRDM pressure housings (69)	—	1	I	No	No
Core exit temperature	ICT-TE-001 thru ICT-TE-016	—	I	Yes/Yes	Yes
Reactor vessel water level (2)	RCS-LE-181 RCS-LE-182	—	I	Yes/Yes	Yes
Source Range Neutron Flux (2)	NIS-NE-031, 032	—	I	Yes/Yes[2]	Yes
Intermediate Range Neutron Flux (2)	NIS-NE-035, 036	—	I	Yes/Yes[2]	No
Power Range Neutron Flux (4)	NIS-NE-041, 042, 043, 044	—	I	Yes/Yes[2]	No
Wide Range Neutron Flux (2)	NIS-NE-033, 034	—	I	Yes/Yes	Yes

Legend: S-VDU = safety visual display unit (VDU)

Notes:

1. Figures 2.4.1-1, 2.4.1-2, and 2.4.1-3 show many of these components.
2. Qualification for harsh environment is not required for post-accident environmental condition.

Table 2.4.1-2 Reactor System Inspections, Tests, Analyses, and Acceptance Criteria (Sheet 1 of 4)

Design Commitment	Inspections, Tests, Analyses	Acceptance Criteria
1. Deleted	1. Deleted	1. Deleted
2. Deleted	2. Deleted	2. Deleted
3. The functional arrangement of the reactor vessel and internals is as described in the Design Description of Subsection 2.4.1.1 and as shown in Figure 2.4.1-1, Figure 2.4.1-2, and Figure 2.4.1-3.	3. Inspection of the as-built reactor vessel and internals, excluding fuel assemblies, will be performed.	3. The as-built reactor vessel and internals functional arrangement, excluding fuel assemblies, conforms to the functional arrangement as described in the Design Description of Subsection 2.4.1.1 and as shown in Figure 2.4.1-1, Figure 2.4.1-2, and Figure 2.4.1-3 with the following dimensional tolerances: A: +0.79/-0.79 inches B: +0.20/-0.40 inches C: +0.20/-0.20 inches D: +0.62/-0.20 inches E: +0.62/-0.20 inches F: +0.50/-0.24 inches G: +0.50/-0.24 inches H: +2.17/-1.34 inches
4.a Deleted	4.a Deleted	4.a Deleted
4.b The low alloy steel materials of construction used for the reactor vessel pressure retaining parts satisfy the fracture toughness requirements of 10 CFR 50 Appendix G and ASME Code Section III.	4.b Tests and analyses of the materials of construction will be performed.	4.b ASME Code Section III data report(s) (certified when required by ASME Code) exists and concludes that the low alloy steel materials of construction used for the reactor vessel pressure retaining parts satisfy the fracture toughness requirements of ASME Code Section III and the beltline materials have an initial Charpy upper-shelf energy of equal to or greater than 75 ft-lb.

Table 2.4.1-2 Reactor System Inspections, Tests, Analyses, and Acceptance Criteria (Sheet 2 of 4)

Design Commitment	Inspections, Tests, Analyses	Acceptance Criteria
5.a The ASME Code Section III components of the reactor system identified in Table 2.4.1-1 are fabricated, installed and inspected in accordance with ASME Code Section III requirements.	5.a Inspection of the as-built ASME Code Section III components of the reactor system, identified in Table 2.4.1-1, will be performed.	5.a The ASME Code Section III data reports (certified, when required by ASME Code) and inspection reports (including N-5 Data Reports where applicable) exist and conclude that the as-built ASME Code Section III components of the reactor system identified in Table 2.4.1-1 are fabricated, installed, and inspected in accordance with ASME Code Section III requirements.
5.b The ASME Code Section III components of the reactor system identified in Table 2.4.1-1 are reconciled with the design requirements.	5.b A reconciliation analysis of the components identified in Table 2.4.1-1 using as-designed and as-built information and ASME Code Section III design report(s) (NCA-3550) will be performed.	5.b The ASME Code Section III design report(s) (certified, when required by ASME Code) exist and conclude that design reconciliation has been completed in accordance with the ASME Code, for the as-built ASME Code Section III components of the reactor system identified in Table 2.4.1-1. The report documents the results of the reconciliation analysis.
6. Pressure boundary welds in ASME Code Section III components, identified in Table 2.4.1-1, meet ASME Code Section III requirements for non-destructive examination of welds.	6. Inspections of the as-built pressure boundary welds in ASME Code Section III components, identified in Table 2.4.1-1, will be performed in accordance with the ASME Code Section III.	6. The ASME Code Section III code reports exist and conclude that the ASME Code Section III requirements are met for non-destructive examination of the as-built pressure boundary welds in ASME Code Section III components identified in Table 2.4.1-1.
7. The ASME Code Section III components, identified in Table 2.4.1-1, retain their pressure boundary integrity at their design pressure.	7. A hydrostatic test will be performed on the as-built components, identified in Table 2.4.1-1, required by the ASME Code Section III to be hydrostatically tested.	7. ASME Code Data Report(s) exist and conclude that the results of the hydrostatic test of the as-built components identified in Table 2.4.1-1 as ASME Code Section III conform to the requirements of the ASME Code Section III.

Table 2.4.1-2 Reactor System Inspections, Tests, Analyses, and Acceptance Criteria (Sheet 3 of 4)

Design Commitment	Inspections, Tests, Analyses	Acceptance Criteria
8. The seismic Category I equipment identified in Table 2.4.1-1 can withstand seismic design basis loads without loss of safety function.	8.i Inspections will be performed to verify that the as-built seismic Category I equipment identified in Table 2.4.1-1, excluding fuel assemblies, is located in a seismic Category I structure.	8.i The as-built seismic Category I equipment identified in Table 2.4.1-1, excluding fuel assemblies, is located in a seismic Category I structure.
	8.ii Type tests, analyses, or a combination of type tests and analyses of seismic Category I equipment identified in Table 2.4.1-1 will be performed using analytical assumptions, or will be performed under conditions, which bound the seismic design basis requirements.	8.ii A report exists and concludes that the seismic Category I equipment identified in Table 2.4.1-1 can withstand seismic design basis loads without loss of safety function.
	8.iii Inspections and analyses will be performed to verify that the as-built seismic Category I equipment identified in Table 2.4.1-1, including anchorages, excluding fuel assemblies, is seismically bounded by the tested or analyzed conditions.	8.iii A report exists and concludes that the as-built seismic Category I equipment identified in Table 2.4.1-1, including anchorages, excluding fuel assemblies, is seismically bounded by the tested or analyzed conditions.
9. The reactor internals can withstand flow-induced vibration.	9.i A flow-induced vibration type test will be performed to measure the vibration response in the preoperational test on the first US-APWR unit.	9.i A report exists and concludes that the results of the first US-APWR unit flow-induced vibration test show that the alternating stress is acceptably low in comparison with the limit for high cycle fatigue in the ASME code.
	9.ii A pre-test inspection, a flow test, and a post-test inspection will be conducted on the as-built reactor internals.	9.ii No structural damage is observed in post-test inspections.

Table 2.4.1-2 Reactor System Inspections, Tests, Analyses, and Acceptance Criteria (Sheet 4 of 4)

Design Commitment	Inspections, Tests, Analyses	Acceptance Criteria
10. The Class 1E equipment identified in Table 2.4.1-1 as being qualified for a harsh environment can withstand the environmental conditions that would exist before, during, and following a design basis accident without loss of safety function for the time required to perform the safety function.	10.i Type tests or a combination of type tests and analyses using the design environmental conditions, or under the conditions which bound the design environmental conditions, will be performed on Class 1E equipment identified in Table 2.4.1-1 as being qualified for a harsh environment.	10.i A report exists and concludes that the Class 1E equipment identified in Table 2.4.1-1 as being qualified for a harsh environment can withstand the environmental conditions that would exist before, during, and following a design basis accident without loss of safety function for the time required to perform the safety function.
	10.ii Inspection will be performed of the as-built Class 1E equipment identified in Table 2.4.1-1 as being qualified for a harsh environment and the associated wiring, cables, and terminations located in a harsh environment.	10.ii The as-built Class 1E equipment and the associated wiring, cables, and terminations identified in Table 2.4.1-1 as being qualified for a harsh environment are bounded by type tests or a combination of type tests and analyses.
11. Class 1E equipment, identified in Table 2.4.1-1, is powered from its respective Class 1E division.	11. A test will be performed on each division of the as-built Class 1E equipment identified in Table 2.4.1-1 by providing a simulated test signal only in the Class 1E division under test.	11. The simulated test signal exists at the as-built Class 1E equipment identified in Table 2.4.1-1 under test.
12. Separation is provided between redundant divisions of reactor system Class 1E cables, and between Class 1E cables and non-Class 1E cables.	12. Inspections of the as-built Class 1E divisional cables will be performed.	12. Physical separation or electrical isolation is provided in accordance with RG 1.75, between the as-built cables of redundant reactor system Class 1E divisions and between Class 1E cables and non-Class 1E cables.
13. Displays identified in Table 2.4.1-1 are provided in the MCR.	13. Inspection will be performed for retrievability of the displays identified in Table 2.4.1-1 in the as-built MCR.	13. Displays identified in Table 2.4.1-1 can be retrieved in the as-built MCR.
14. Irradiation specimen guides are attached to the core barrel to hold capsules with material surveillance specimens.	14. Inspection of the as-built core barrel will be performed for the existence of the irradiation specimen guides and existence of surveillance capsules.	14. Irradiation specimen guides are attached to the as-built core barrel and a minimum of three as-built surveillance capsules are provided.

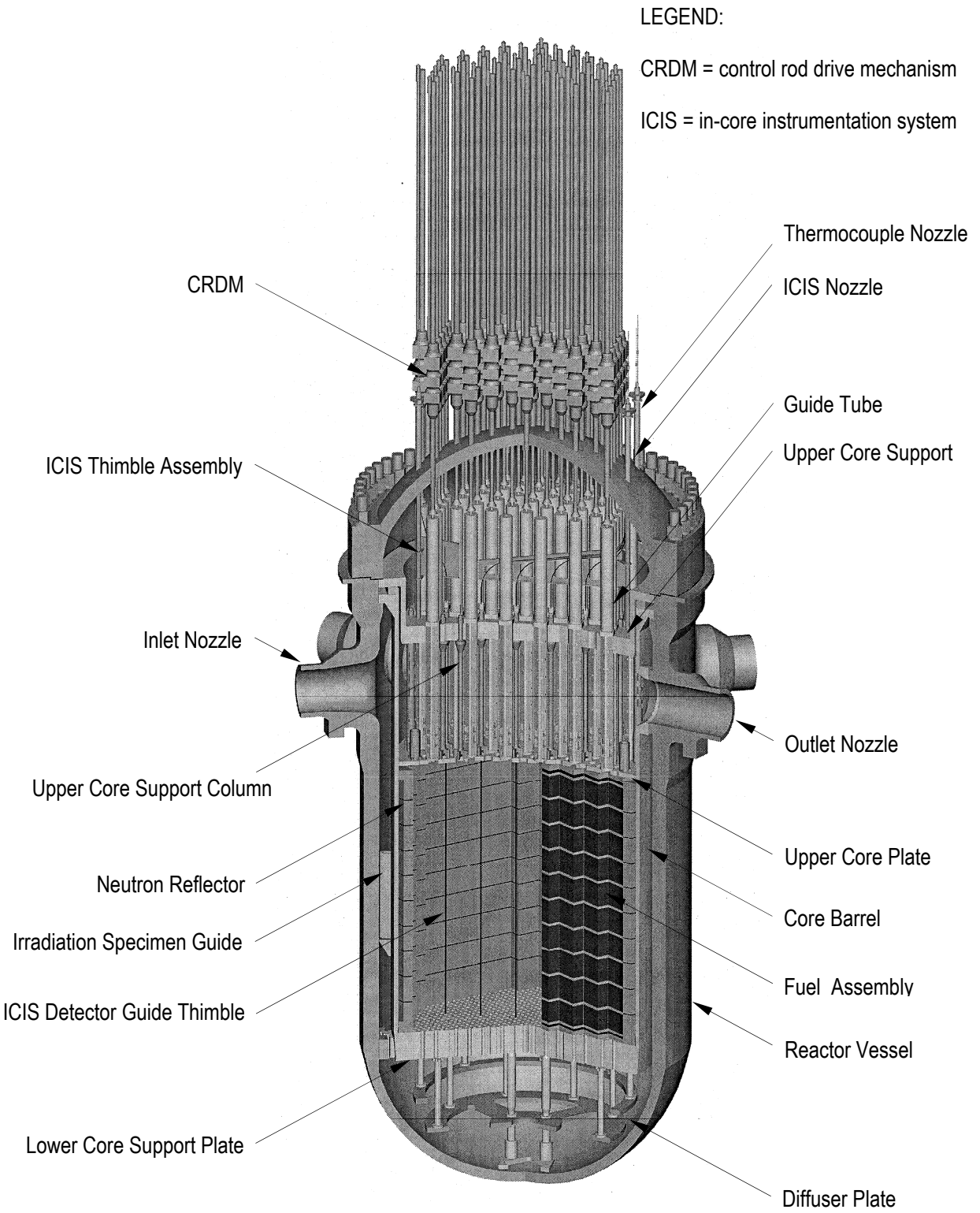

Figure 2.4.1-1 Reactor General Assembly

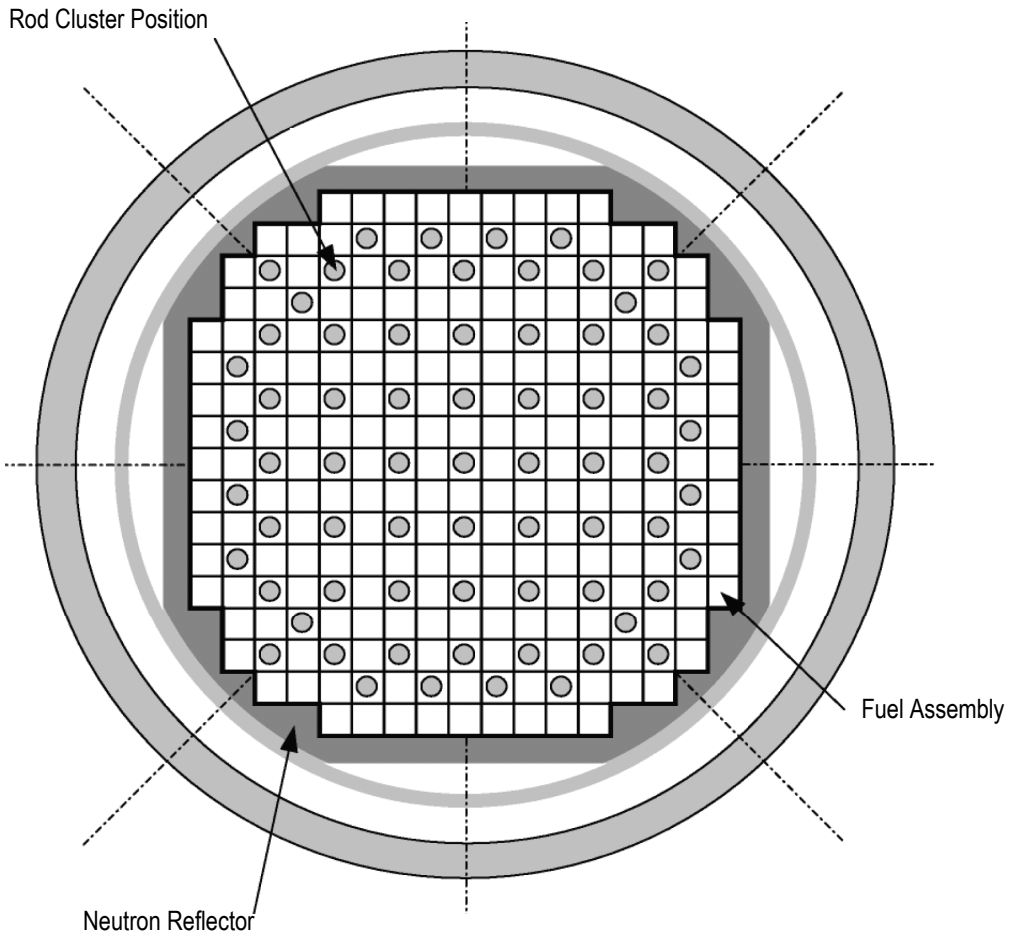

Figure 2.4.1-2 Arrangement of Fuel and Rod Cluster Control Assemblies

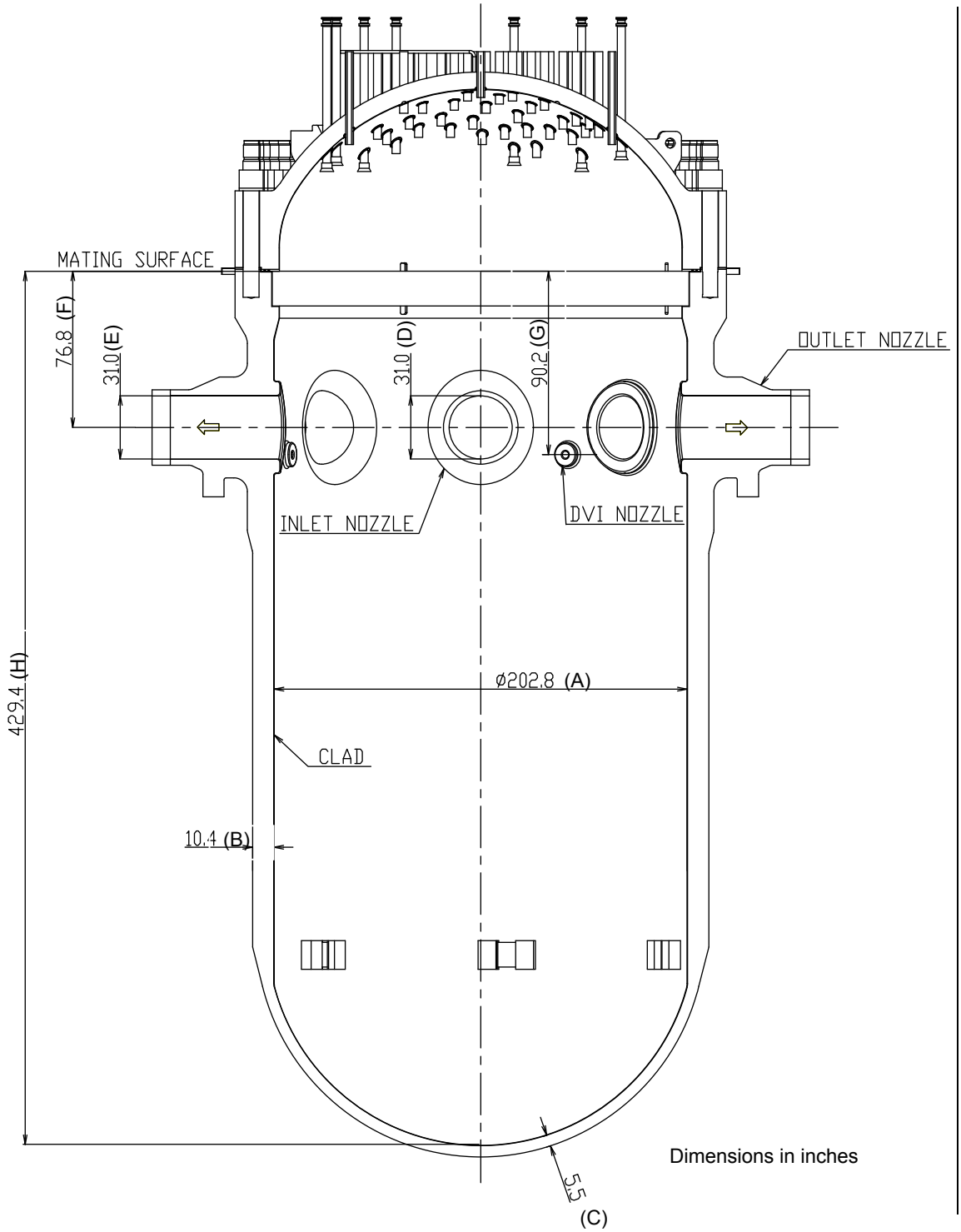

Figure 2.4.1-3 Reactor Vessel

2.4.2 Reactor Coolant System (RCS)

2.4.2.1 Design Description

The purpose and primary function of the reactor coolant system (RCS) are to provide reactor cooling by transferring the heat generated in the reactor core to the secondary side of steam generators (SGs).

The RCS is a safety-related system. Besides cooling the reactor core, the RCS's significant safety functions include the following;

- Forming the reactor coolant pressure boundary
- Providing overpressure protection via the pressurizer safety valves
- Providing depressurization during design bases events
- Providing coastdown flow by reactor coolant pump (RCP) rotating inertia
- Providing the containment isolation function, as described in Subsection 2.11.2, of the piping that penetrates the containment.

As shown in Figures 2.4.2-1 and 2.4.2-2, the major components of the RCS are four SGs, four RCPs, one pressurizer, and the reactor coolant piping and valves. (Note that the reactor vessel is addressed in Subsection 2.4.1.)

Tables 2.4.2-2 and 2.4.2-3 provide information on design characteristics of system components and system piping, respectively.

1.a Deleted

1.b Deleted

2. The functional arrangement of the RCS is as described in the Design Description of Subsection 2.4.2.1 and in Table 2.4.2-1, and as shown in Figures 2.4.2-1 and 2.4.2-2.

3.a Deleted.

3.b Deleted.

4.a.i The ASME Code Section III components of the RCS, identified in Table 2.4.2-2, are fabricated, installed and inspected in accordance with ASME Code Section III requirements.

4.a.ii The ASME Code Section III components of the RCS identified in Table 2.4.2-2 are reconciled with the design requirements.

4.b.i The ASME Code Section III piping of the RCS, including supports, identified in Table 2.4.2-3, is fabricated, installed, and inspected in accordance with ASME Code Section III requirements.

4.b.ii The ASME Code Section III piping of the RCS, including supports, identified in Table 2.4.2-3 is reconciled with the design requirements.

5.a Pressure boundary welds in ASME Code Section III components, identified in Table 2.4.2-2, meet ASME Code Section III requirements for non-destructive examination of welds.

5.b Pressure boundary welds in ASME Code Section III piping, identified in Table 2.4.2-3, meet ASME Code Section III requirements for non-destructive examination of welds.

6.a The ASME Code Section III components, identified in Table 2.4.2-2, retain their pressure boundary integrity at their design pressure.

6.b The ASME Code Section III piping, identified in Table 2.4.2-3, retains its pressure boundary integrity at its design pressure.

7. The seismic Category I equipment, identified in Table 2.4.2-2, can withstand seismic design basis loads without loss of safety function.

8. The seismic Category I piping, including supports, identified in Table 2.4.2-3 can withstand seismic design basis loads without a loss of its safety function.

9.a The Class 1E equipment identified in Table 2.4.2-2 as being qualified for a harsh environment can withstand the environmental conditions that would exist before, during, and following a design basis accident without loss of safety function for the time required to perform the safety function.

9.b Class 1E equipment, identified in Table 2.4.2-2, is powered from its respective Class 1E division.

9.c Separation is provided between redundant divisions of RCS Class 1E cables, and between Class 1E cables and non-Class 1E cables.

10.a The pressurizer safety valves identified in Table 2.4.2-2 provide overpressure protection in accordance with the ASME Code Section III.

10.b Each RCP flywheel assembly can withstand a design overspeed condition.

10.c RCPs have a rotating inertia to provide RCS flow coastdown on loss of power to the pumps.

10.d The RCS provides circulation of coolant through the reactor core.

10.e The RCS provides the means to control system pressure.

11.a Controls are provided in the MCR to open and close the remotely operated valves identified in Table 2.4.2-2.

11.b The remotely operated valves identified in Table 2.4.2-2 as having PSMS control perform an active safety function after receiving a signal from PSMS.

12.a The motor-operated valves, identified in Table 2.4.2-2, as having an active safety function perform an active safety function to change position as indicated in the table.

12.b After loss of motive power, the remotely operated valves, identified in Table 2.4.2-2, assume the indicated loss of motive power position.

13.a Controls are provided in the MCR to start and stop the reactor coolant pumps identified in Table 2.4.2-4.

13.b The pumps identified in Table 2.4.2-2 as having PSMS control perform an active safety function after receiving a signal from PSMS.

14. Alarms and displays identified in Table 2.4.2-4 are provided in the MCR.

15. Alarms, displays and controls identified in Table 2.4.2-4 are provided in the RSC.

16. The piping identified in Table 2.4.2-3 as designed for leak-before-break (LBB) meets the LBB criteria, or an evaluation is performed of the protection from the dynamic effects of a rupture of the piping.

17. Controls are provided in the MCR to start and stop the pressurizer heaters identified in Table 2.4.2-4.

2.4.2.2 Inspections, Tests, Analyses, and Acceptance Criteria

Table 2.4.2-5 describes the ITAAC for the RCS.

The ITAAC associated with the RCS equipment, components, and piping that comprise a portion of the CIS are described in Table 2.11.2-2.

Table 2.4.2-1 Reactor Coolant System Location of Equipment and Piping

System and Components	Location
Pressurizer	Containment
Steam generators	Containment
Reactor coolant pumps	Containment
Pressurizer piping upstream of and including the pressurizer safety valves RCS-SRV-120,121,122,123, safety depressurization valves RCS-MOV-117A,B, and depressurization valves RCS-MOV-119	Containment
Reactor vessel head vent piping upstream of and including the reactor vessel head vent valves RCS-MOV-003A,B	Containment
Pressurizer piping downstream of and excluding pressurizer safety valves	Containment
Pressurizer piping downstream of and excluding safety depressurization valves	Containment
Pressurizer piping downstream of and excluding depressurization valves	Containment
Reactor vessel head vent line piping downstream of and excluding the reactor vessel head vent valves	Containment
Reactor coolant piping drain piping upstream of and including the second drain stop valve RCS-VLV-023A,B,C,D	Containment
Reactor coolant piping	Containment
Pressurizer surge line piping	Containment
Pressurizer spray line piping	Containment

Table 2.4.2-2 Reactor Coolant System Equipment Characteristics (Sheet 1 of 4)

Equipment Name	Tag No.	ASME Code Section III Class	Seismic Category I	Remotely Operated Valve	Class 1E/ Qual. for Harsh Envir.	PSMS Control	Active Safety Function	Loss of Motive Power Position
Reactor coolant pumps	RCS-MPP-001 A, B, C, D	1	Yes	—	No/No	ECCS Actuation coincident with RT (P-4)	Stop	—
Pressurizer	RCS-MTK-002	1	Yes	—	—/—	—	—	—
SG (primary side)	RCS-MHX-001 A, B, C, D	1	Yes	—	—/—	—	—	—
SG (secondary side)		2				—		—
Pressurizer safety valves	RCS-SRV-120,121,122,123	1	Yes	—	—/—	—	Transfer Open/ Transfer Closed	—
Safety depressurization valves	RCS-MOV-117 A, B	1	Yes	Yes	Yes/Yes	Remote Manual	Transfer Open/ Transfer Closed	As Is
SDV block Valves	RCS-MOV-116 A, B	1	Yes	Yes	Yes/Yes	Remote Manual	Transfer Open/ Transfer Closed	As Is
Depressurization valves	RCS-MOV-118	1	Yes	Yes	Yes/Yes	—	—	As Is
Depressurization valves	RCS-MOV-119	1	Yes	Yes	Yes/Yes	—	—	As Is

Table 2.4.2-2 Reactor Coolant System Equipment Characteristics (Sheet 2 of 4)

Equipment Name	Tag No.	ASME Code Section III Class	Seismic Category I	Remotely Operated Valve	Class 1E/ Qual. for Harsh Envir.	PSMS Control	Active Safety Function	Loss of Motive Power Position
Pressurizer spray valves	RCS-PCV-061 A, B	1	Yes	Yes	No/No	—	—	Closed
Pressurizer spray block valves	RCS-MOV-111 A, B	1	Yes	Yes	No/No	—	—	As Is
Pressurizer spray bypass valves	RCS-VLV-112 A, B	1	Yes	No	—/—	—	—	—
Letdown line stop valve	RCS-VLV-021	1	Yes	No	—/—	—	—	—
Reactor Coolant Piping First Drain Stop Valves	RCS-VLV-022 A, B, C, D	1	Yes	No	—/—	—	—	—
Reactor Coolant Piping Second Drain Stop Valves	RCS-VLV-023 A, B, C, D	1	Yes	No	—/—	—	—	—
Cavity/RCS water level meter line stop valve	RCS-VLV-024, 025	1	Yes	No	—/—	—	—	—
Reactor Vessel Head Vent First Valves	RCS-MOV-002 A, B,	1	Yes	Yes	Yes/Yes	Remote Manual	Transfer Open/ Transfer Closed	As Is
Reactor Vessel Head Vent Second Valves	RCS-MOV-003 A, B	1	Yes	Yes	Yes/Yes	Remote Manual	Transfer Open/ Transfer Closed	As Is
Reactor Coolant Flow	RCS-FT-022, 023, 024, 025, 032, 033, 034, 035, 042, 043, 044, 045, 052, 053, 054, 055	—	Yes	—	Yes/Yes(1)	—	—	—

Table 2.4.2-2 Reactor Coolant System Equipment Characteristics (Sheet 3 of 4)

Equipment Name	Tag No.	ASME Code Section III Class	Seismic Category I	Remotely Operated Valve	Class 1E/ Qual. for Harsh Envir.	PSMS Control	Active Safety Function	Loss of Motive Power Position
Pressurizer Water Level	RCS-LT-061, 062, 063, 064	—	Yes	—	Yes/Yes	—	—	—
Reactor Coolant Pressure	RCS-PT-020, 030, 040, 050	—	Yes	—	Yes/Yes	—	—	—
Pressurizer Pressure	RCS-PT-061, 062, 063, 064	—	Yes	—	Yes/Yes	—	—	—
Reactor Coolant Hot Leg Temperature (Wide Range)	RCS-TE-020, 030, 040, 050	—	Yes	—	Yes/Yes	—	—	—
Reactor Coolant Cold Leg Temperature (Wide Range)	RCS-TE-025, 035, 045, 055	—	Yes	—	Yes/Yes	—	—	—
Reactor Coolant Hot Leg Temperature (Narrow Range)	RCS-TE-021A, 021B, 021C, 031A, 031B, 031C, 041A, 041B, 041C, 051A, 051B, 051C	—	Yes	—	Yes/Yes	—	—	—
Reactor Coolant Cold Leg Temperature (Narrow Range)	RCS-TE-021D, 031D, 041D, 051D	—	Yes	—	Yes/Yes	—	—	—

Table 2.4.2-2 Reactor Coolant System Equipment Characteristics (Sheet 4 of 4)

Equipment Name	Tag No.	ASME Code Section III Class	Seismic Category I	Remotely Operated Valve	Class 1E/ Qual. for Harsh Envir.	PSMS Control	Active Safety Function	Loss of Motive Power Position
Reactor Coolant Pump Speed	RCS-SE-028A, 038A, 048A, 058A	—	Yes	—	Yes/Yes(1)	—	—	—

NOTE:
Dash (-) indicates not applicable
1. Qualification for harsh environment is not required for post-accident environmental condition.

Table 2.4.2-3 Reactor Coolant System Piping Characteristics

Pipe Line Name	ASME Code Section III Class	Leak Before Break	Seismic Category I
Pressurizer piping upstream of and including the pressurizer safety valves RCS-SRV-120,121,122,123, safety depressurization valves RCS-MOV-117A,B, and depressurization valves RCS-MOV-119	1	No	Yes
Reactor vessel head vent piping upstream of and including the reactor vessel head vent valves RCS-MOV-003A,B	1	No	Yes
Pressurizer piping downstream of and excluding pressurizer safety valves RCS-SRV-120,121,122,123	—	No	No
Pressurizer piping downstream of and excluding safety depressurization valves RCS-MOV-117A,B	—	No	No
Pressurizer piping downstream of and excluding depressurization valves RCS-MOV-119	—	No	No
Reactor vessel head vent line piping downstream of and excluding the reactor vessel head vent valves RCS-MOV-003A,B	—	No	No
Reactor coolant piping drain piping upstream of and including the second drain stop valve RCS-VLV-023A,B,C,D	1	No	Yes
Reactor coolant piping	1	Yes	Yes
Pressurizer surge line piping	1	Yes	Yes
Pressurizer spray line piping	1	No	Yes

Note: Dash (-) indicates not applicable

Table 2.4.2-4 Reactor Coolant System Equipment Alarms, Displays, and Control Functions

Equipment/Instrument Name	MCR/RSC Alarm	MCR Display	MCR/RSC Control Function	RSC Display
Reactor Coolant Pump	No	Yes	Yes	Yes
Pressurizer Heaters	No	Yes	Yes	Yes
Pressurizer Safety Valve	No	Yes	No	Yes
Safety Depressurization Valve	No	Yes	Yes	Yes
SDV block valve	No	Yes	Yes	Yes
Depressurization Valve	No	Yes	Yes	Yes
Reactor Vessel Head Vent Valve	No	Yes	Yes	Yes
Reactor Coolant Flow RCS-FT-022,023,024,025, 032,033,034,035, 042,043,044,045, 052,053,054,055	Yes	No	No	No
Reactor Coolant Pump Speed RCS-SE-028A, 038A, 048A, 058A	Yes	No	No	No
Pressurizer Pressure RCS-PT-061,062,063,064	Yes	Yes	No	Yes
Pressurizer Water Level RCS-LT-061,062,063,064	Yes	Yes	No	Yes
Reactor Coolant Hot Leg Temperature (Wide Range) RCS-TE-020, 030, 040, 050	No	Yes	No	Yes
Reactor Coolant Cold Leg Temperature (Wide Range) RCS-TE-025, 035, 045, 055	No	Yes	No	Yes
Reactor Coolant Hot Leg Temperature (Narrow Range) RCS-TE-021A,B,C, 031A,B,C, 041A,B,C, 051A,B,C	—	—	—	—
Reactor Coolant Cold Leg Temperature (Narrow Range) RCS-TE-021D, 031D, 041D, 051D	—	—	—	—
Reactor Coolant Pressure RCS-PT-020, 030, 040, 050	No	Yes	No	Yes
Reactor Vessel Water Level RCS-LE-181,182	No	Yes	No	Yes

Note: Dash (-) indicates not applicable

Table 2.4.2-5 Reactor Coolant System Inspections, Tests, Analyses, and Acceptance Criteria (Sheet 1 of 8)

Design Commitment	Inspections, Tests, Analyses	Acceptance Criteria
1a. Deleted	1a. Deleted	1a. Deleted
1b. Deleted	1b. Deleted	1b. Deleted
2. The functional arrangement of the RCS is as described in the Design Description of Subsection 2.4.2.1 and in Table 2.4.2-1, and as shown in Figures 2.4.2-1 and 2.4.2-2.	2. Inspection of the as-built RCS will be performed.	2. The as-built RCS conforms to the functional arrangement as described in the Design Description of Subsection 2.4.2.1 and in Table 2.4.2-1, and as shown in Figures 2.4.2-1 and 2.4.2-2.
3a. Deleted	3a. Deleted	3a. Deleted
3b. Deleted	3b. Deleted	3b. Deleted
4.a.i The ASME Code Section III components of the RCS, identified in Table 2.4.2-2, are fabricated, installed and inspected in accordance with ASME Code Section III requirements.	4.a.i Inspection of the as-built ASME Code Section III components of the RCS, identified in Table 2.4.2-2, will be performed.	4.a.i The ASME Code Section III data report(s) (certified, when required by ASME Code) and inspection reports (including N-5 Data Reports where applicable) exist and conclude that the as-built ASME Code Section III components of the RCS identified in Table 2.4.2-2 are fabricated, installed, and inspected in accordance with ASME Code Section III requirements.
4.a.ii The ASME Code Section III components of the RCS identified in Table 2.4.2-2 are reconciled with the design requirements.	4.a.ii A reconciliation analysis of the components identified in Table 2.4.2-2 using as-designed and as-built information and ASME Code Section III design report(s) (NCA-3550) will be performed.	4.a.ii The ASME Code Section III design report(s) (certified, when required by ASME Code) exist and conclude that design reconciliation has been completed in accordance with the ASME Code, for the as-built ASME Code Section III components of the RCS identified in Table 2.4.2-2. The report documents the results of the reconciliation analysis.

Table 2.4.2-5 Reactor Coolant System Inspections, Tests, Analyses, and Acceptance Criteria (Sheet 2 of 8)

Design Commitment	Inspections, Tests, Analyses	Acceptance Criteria
4.b.i The ASME Code Section III piping of the RCS, including supports, identified in Table 2.4.2-3, is fabricated, installed, and inspected in accordance with ASME Code Section III requirements.	4.b.i Inspection of the as-built ASME Code Section III piping of the RCS, including supports, identified in Table 2.4.2-3, will be performed .	4.b.i The ASME Code Section III data report(s) (certified when required by ASME Code) and inspection reports (including N-5 Data Reports where applicable) exist and conclude that the as-built ASME Code Section III piping of the RCS, including supports, identified in Table 2.4.2-3 is fabricated, installed, and inspected in accordance with ASME Code Section III requirements.
4.b.ii The ASME Code Section III piping of the RCS, including supports, identified in Table 2.4.2-3 is reconciled with the design requirements.	4.b.ii A reconciliation analysis of the piping of the RCS, including supports, identified in Table 2.4.2-3, using as-designed and as-built information and ASME Code Section III design report(s) (NCA-3550) will be performed.	4.b.ii The ASME Code Section III design report(s) (certified, when required by ASME Code) exist and conclude that design reconciliation has been completed in accordance with the ASME Code, for the as-built ASME Code Section III piping of the RCS, including supports, identified in Table 2.4.2-3. The report documents the results of the reconciliation analysis.
5.a Pressure boundary welds in ASME Code Section III components, identified in Table 2.4.2-2, meet ASME Code Section III requirements for non-destructive examination of welds.	5.a Inspections of the as-built pressure boundary welds in ASME Code Section III components identified in Table 2.4.2-2, will be performed in accordance with the ASME Code Section III.	5.a The ASME Code Section III code reports exist and conclude that the ASME Code Section III requirements are met for non-destructive examination of the as-built pressure boundary welds in ASME Code Section III components identified in Table 2.4.2-2.
5.b Pressure boundary welds in ASME Code Section III piping, identified in Table 2.4.2-3, meet ASME Code Section III requirements for non-destructive examination of welds.	5.b Inspections of the as-built pressure boundary welds in ASME Code Section III piping identified in Table 2.4.2-3 will be performed in accordance with the ASME Code Section III.	5.b The ASME Code Section III code reports exist and conclude that the ASME Code Section III requirements are met for non-destructive examination of the as-built pressure boundary welds in ASME Code Section III piping identified in Table 2.4.2-3.

Table 2.4.2-5 Reactor Coolant System Inspections, Tests, Analyses, and Acceptance Criteria (Sheet 3 of 8)

Design Commitment	Inspections, Tests, Analyses	Acceptance Criteria
6.a The ASME Code Section III components, identified in Table 2.4.2-2, retain their pressure boundary integrity at their design pressure.	6.a A hydrostatic test will be performed on the as-built components, identified in Table 2.4.2-2, required by the ASME Code Section III to be hydrostatically tested.	6.a ASME Code Data Report(s) exist and conclude that the results of the hydrostatic test of the as-built components identified in Table 2.4.2-2 as ASME Code Section III conform to the requirements of the ASME Code Section III.
6.b The ASME Code Section III piping, identified in Table 2.4.2-3, retains its pressure boundary integrity at its design pressure.	6.b A hydrostatic test will be performed on the as-built piping, identified in Table 2.4.2-3, required by the ASME Code Section III to be hydrostatically tested.	6.b ASME Code Data Report(s) exist and conclude that the results of the hydrostatic test of the as-built piping identified in Table 2.4.2-3 as ASME Code Section III conform to the requirements of the ASME Code Section III.
7. The seismic Category I equipment, identified in Table 2.4.2-2, can withstand seismic design basis loads without loss of safety function.	7.i Inspections will be performed to verify that the as-built seismic Category I equipment identified in Table 2.4.2-2 is located in a seismic Category I structure.	7.i The as-built seismic Category I equipment identified in Table 2.4.2-2 is located in a seismic Category I structure.
	7.ii Type tests, analyses, or a combination of type tests and analyses of seismic Category I equipment identified in Table 2.4.2-2 will be performed using analytical assumptions, or will be performed under conditions, which bound the seismic design basis requirements.	7.ii A report exists and concludes that the seismic Category I equipment identified in Table 2.4.2-2 can withstand seismic design basis loads without loss of safety function.
	7.iii Inspections and analyses will be performed to verify that the as-built seismic Category I equipment identified in Table 2.4.2-2, including anchorages, is seismically bounded by the tested or analyzed conditions.	7.iii A report exists and concludes that the as-built seismic Category I equipment identified in Table 2.4.2-2, including anchorages, is seismically bounded by the tested or analyzed conditions.

Table 2.4.2-5 Reactor Coolant System Inspections, Tests, Analyses, and Acceptance Criteria (Sheet 4 of 8)

Design Commitment	Inspections, Tests, Analyses	Acceptance Criteria
8. The seismic Category I piping, including supports, identified in Table 2.4.2-3 can withstand seismic design basis loads without a loss of its safety function.	8.i Inspections will be performed to verify that the as-built seismic Category I piping, including supports, identified in Table 2.4.2-3 is supported by a seismic Category I structure(s).	8.i The as-built seismic Category I piping, including supports, identified in Table 2.4.2-3 is supported by a seismic Category I structure(s).
	8.ii Inspections and analyses will be performed to verify that the as-built seismic Category I piping, including supports, identified in Table 2.4.2-3 can withstand seismic design basis loads without a loss of its safety function.	8.ii A report exists and concludes that the as-built seismic Category I piping, including supports, identified in Table 2.4.2-3 can withstand seismic design basis loads without a loss of its safety function.
9.a The Class 1E equipment identified in Table 2.4.2-2 as being qualified for a harsh environment can withstand the environmental conditions that would exist before, during, and following a design basis accident without loss of safety function for the time required to perform the safety function.	9.a.i Type tests or a combination of type tests and analyses using the design environmental conditions, or under the conditions which bound the design environmental conditions, will be performed on the Class 1E equipment identified in Table 2.4.2-2 as being qualified for a harsh environment.	9.a.i A report exists and concludes that the Class 1E equipment identified in Table 2.4.2-2 as being qualified for a harsh environment can withstand the environmental conditions that would exist before, during, and following a design basis accident without loss of safety function for the time required to perform the safety function.
	9.a.ii Inspection will be performed of the as-built Class 1E equipment identified in table 2.4.2-2 as being qualified for a harsh environment and the associated wiring, cables, and terminations located in a harsh environment.	9.a.ii The as-built Class 1E equipment and the associated wiring, cables, and terminations identified in Table 2.4.2-2 as being qualified for a harsh environment are bounded by type tests or a combination of type tests and analyses.
9.b Class 1E equipment, identified in Table 2.4.2-2, is powered from its respective Class 1E division.	9.b A test will be performed on each division of the as-built Class 1E equipment identified in Table 2.4.2-2 by providing a simulated test signal only in the Class 1E division under test.	9.b The simulated test signal exists at the as-built Class 1E equipment identified in Table 2.4.2-2 under test.

Table 2.4.2-5 Reactor Coolant System Inspections, Tests, Analyses, and Acceptance Criteria (Sheet 5 of 8)

Design Commitment	Inspections, Tests, Analyses	Acceptance Criteria
9.c Separation is provided between redundant divisions of RCS Class 1E cables, and between Class 1E cables and non-Class 1E cables.	9.c Inspections of the as-built Class 1E divisional cables will be performed	9.c Physical separation or electrical isolation is provided in accordance with RG 1.75, between the as-built cables of redundant RCS Class 1E divisions and between Class 1E cables and non-Class 1E cables.
10.a The pressurizer safety valves identified in Table 2.4.2-2 provide overpressure protection in accordance with the ASME Code Section III.	10.a.i Inspections of the pressurizer safety valves identified in Table 2.4.2-2 will be conducted to confirm that the value of the ASME Code nameplate rating is greater than or equal to system relief requirements.	10.a.i The minimum capacity of each pressurizer safety valve identified in Table 2.4.2-2 is greater than or equal to 432,000 lb/hr.
	10.a.ii Tests and analyses in accordance with ASME Code Section III of the pressurizer safety valves identified in Table 2.4.2-2 will be performed to confirm set pressure.	10.a.ii A report exists and concludes the following as-built pressurizer safety valves, identified in Table 2.4.2-2, set pressure; ≥ 2435 psig and ≤ 2485 psig
10.b Each RCP flywheel assembly can withstand a design overspeed condition.	10.b Tests of each as-built RCP flywheel assembly will be performed at overspeed conditions.	10.b Each as-built RCP flywheel assembly can withstand an overspeed condition of no less than 125% of operating speed.
10.c RCPs have a rotating inertia to provide RCS flow coastdown on loss of power to the pumps.	10.c Tests will be performed to determine the RCP flow coastdown curve.	10.c The RCP flow coastdown provides RCS flows greater than or equal to the flow shown in Figure 2.4.2-3.
10.d The RCS provides circulation of coolant through the reactor core.	10.d Tests and analyses to measure RCS flow with the as-built four reactor coolant pumps operating at no-load RCS pressure and temperature conditions will be performed. Analyses will be performed to convert the measured pre-fuel load flow to post-fuel load flow with 10% steam generator tube plugging.	10.d A report exists and concludes that the calculated reactor coolant flow rate per loop with 10% steam generator plugging is at least 112,000 gallons per minute.

Table 2.4.2-5 Reactor Coolant System Inspections, Tests, Analyses, and Acceptance Criteria (Sheet 6 of 8)

Design Commitment	Inspections, Tests, Analyses	Acceptance Criteria
10.e The RCS provides the means to control system pressure.	10.e Inspections will be performed to verify the rated capacity of the as-built pressurizer heater backup groups A, B, C, and D	10.e Each as-built pressurizer heater backup group (A, B, C, and D) has a rated capacity of at least 120 kW.
11.a Controls are provided in the MCR to open and close the remotely operated valves identified in Table 2.4.2-2.	11.a Tests will be performed on the as-built remotely operated valves identified in Table 2.4.2-2 using controls in the as-built MCR.	11.a Controls in the as-built MCR open and close the as-built remotely operated valves identified in Table 2.4.2-2.
11.b The remotely operated valves identified in Table 2.4.2-2 as having PSMS control perform an active safety function after receiving a signal from PSMS.	11.b Tests will be performed on the as-built remotely operated valves identified in Table 2.4.2-2 using simulated signals.	11.b The as-built remotely operated valves identified in Table 2.4.2-2 as having PSMS control perform the active function identified in the table after receiving a simulated signal.
12.a The motor-operated valves, identified in Table 2.4.2-2, as having an active safety function perform an active safety function to change position as indicated in the table.	12.a.i Type tests, or a combination of type tests and analyses, of the motor-operated valves identified in Table 2.4.2-2 will be performed that demonstrate the capability of the valve to operate under its design conditions.	12.a.i A report exists and concludes that each motor-operated valve changes position as indicated in Table 2.4.2-2 under design conditions.
	12.a.ii Tests of the as-built motor-operated valves identified in Table 2.4.2-2 will be performed under preoperational flow, differential pressure, and temperature conditions.	12.a.ii Each as-built motor-operated valve changes position as identified in Table 2.4.2-2 under preoperational test conditions.
	12.a.iii Inspections will be performed of the as-built motor-operated valves identified in Table 2.4.2-2.	12.a.iii Each as-built motor-operated valve identified in Table 2.4.2-2 is bounded by the type tests, or a combination of the type tests and analyses.

Table 2.4.2-5 Reactor Coolant System Inspections, Tests, Analyses, and Acceptance Criteria (Sheet 7 of 8)

Design Commitment	Inspections, Tests, Analyses	Acceptance Criteria
12.b After loss of motive power, the remotely operated valves, identified in Table 2.4.2-2, assume the indicated loss of motive power position.	12.b Tests of the as-built remotely operated valves identified in Table 2.4.2-2 will be performed under the conditions of loss of motive power.	12.b Upon loss of motive power, each as-built remotely operated valve identified in Table 2.4.2-2 assumes the indicated loss of motive power position.
13.a Controls are provided in the MCR to start and stop the reactor coolant pumps identified in Table 2.4.2-4.	13.a Tests will be performed on the as-built reactor coolant pumps identified in Table 2.4.2-4 using controls in the as-built MCR.	13.a Controls in the as-built MCR start and stop the as-built reactor coolant pumps identified in Table 2.4.2-4.
13.b The pumps identified in Table 2.4.2-2 as having PSMS control perform an active safety function after receiving a signal from PSMS.	13.b Tests will be performed on the as-built pumps identified in Table 2.4.2-2 using simulated signals.	13.b The as-built pumps identified in Table 2.4.2-2 as having PSMS control perform the active function identified in the table after receiving a simulated signal.
14. Alarms and displays identified in Table 2.4.2-4 are provided in the MCR.	14. Inspection will be performed for retrievability of the alarms and displays identified in Table 2.4.2-4 in the as-built MCR.	14. Alarms and displays identified in Table 2.4.2-4 can be retrieved in the as-built MCR.
15. Alarms, displays and controls identified in Table 2.4.2-4 are provided in the RSC.	15.i Inspection will be performed for retrievability of the alarms and displays identified in Table 2.4.2-4 in the as-built RSC.	15.i Alarms and displays identified in Table 2.4.2-4 can be retrieved in the as-built RSC.
	15.ii Tests of the as-built RSC control functions identified in Table 2.4.2-4 will be performed.	15.ii Controls in the as-built RSC operate the as-built equipment identified in Table 2.4.2-4 with an RSC control function.

Table 2.4.2-5 Reactor Coolant System Inspections, Tests, Analyses, and Acceptance Criteria (Sheet 8 of 8)

Design Commitment	Inspections, Tests, Analyses	Acceptance Criteria
16. The piping identified in Table 2.4.2-3 as designed for leak-before-break (LBB) meets the LBB criteria, or an evaluation is performed of the protection from the dynamic effects of a rupture of the piping.	16. Inspections of the as-built piping identified in Table 2.4.2-3 will be performed based on the evaluation report for LBB or for the evaluation of the protection from dynamic effects of a pipe break, as specified in Section 2.3.	16. An LBB evaluation report exists and concludes that the LBB acceptance criteria are met by the as-built piping identified in Table 2.4.2-3 and piping materials, or a pipe break hazards analyses report exists and concludes that protection from the dynamic effects of a line break is provided.
17. Controls are provided in the MCR to start and stop the pressurizer heaters identified in Table 2.4.2-4.	17. Tests will be performed on the as-built pressurizer heaters identified in Table 2.4.2-4 using controls in the as-built MCR.	17. Controls in the as-built MCR start and stop the as-built pressurizer heaters identified in Table 2.4.2-4.

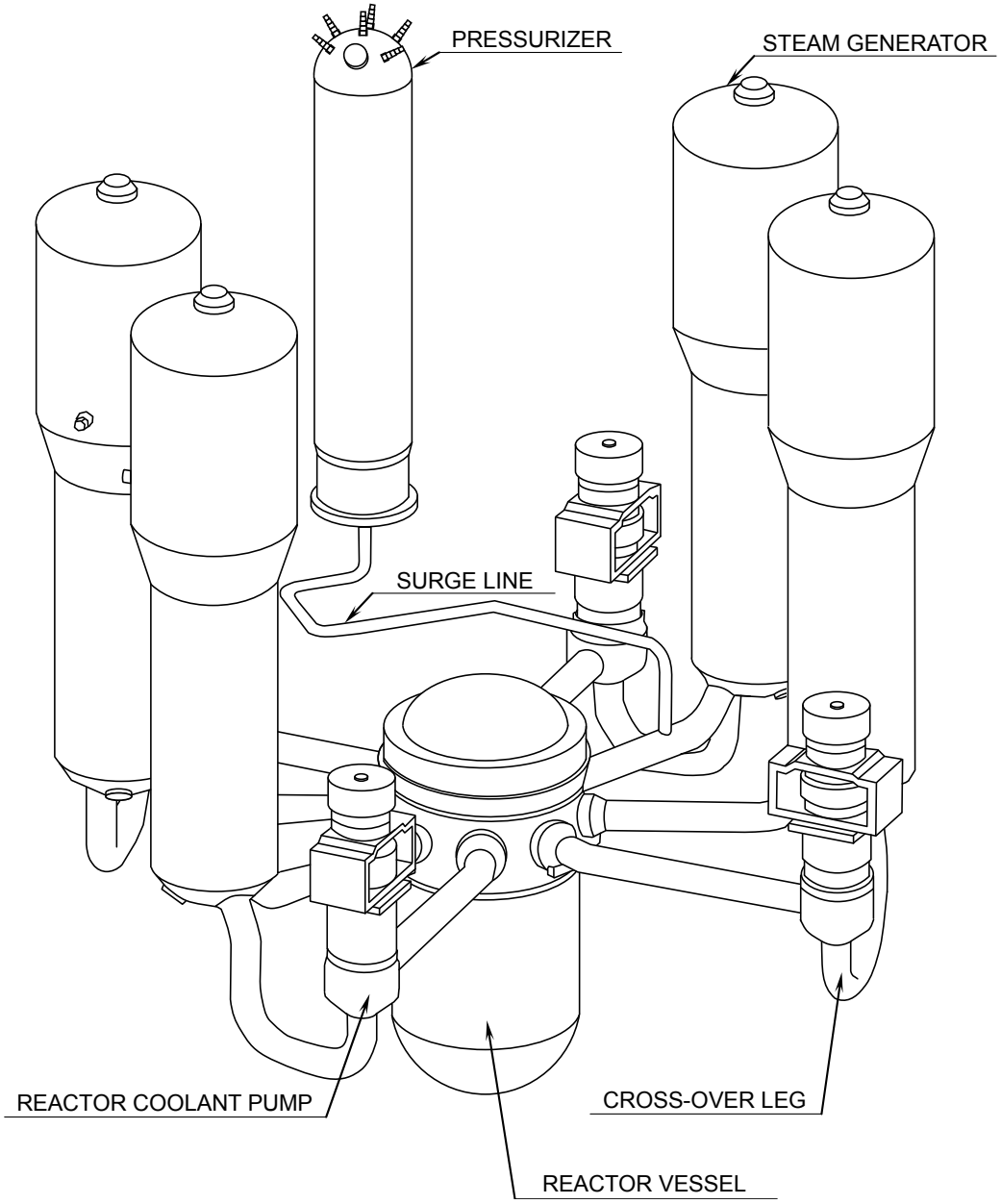

Figure 2.4.2-1 Isometric View of the Reactor Coolant System

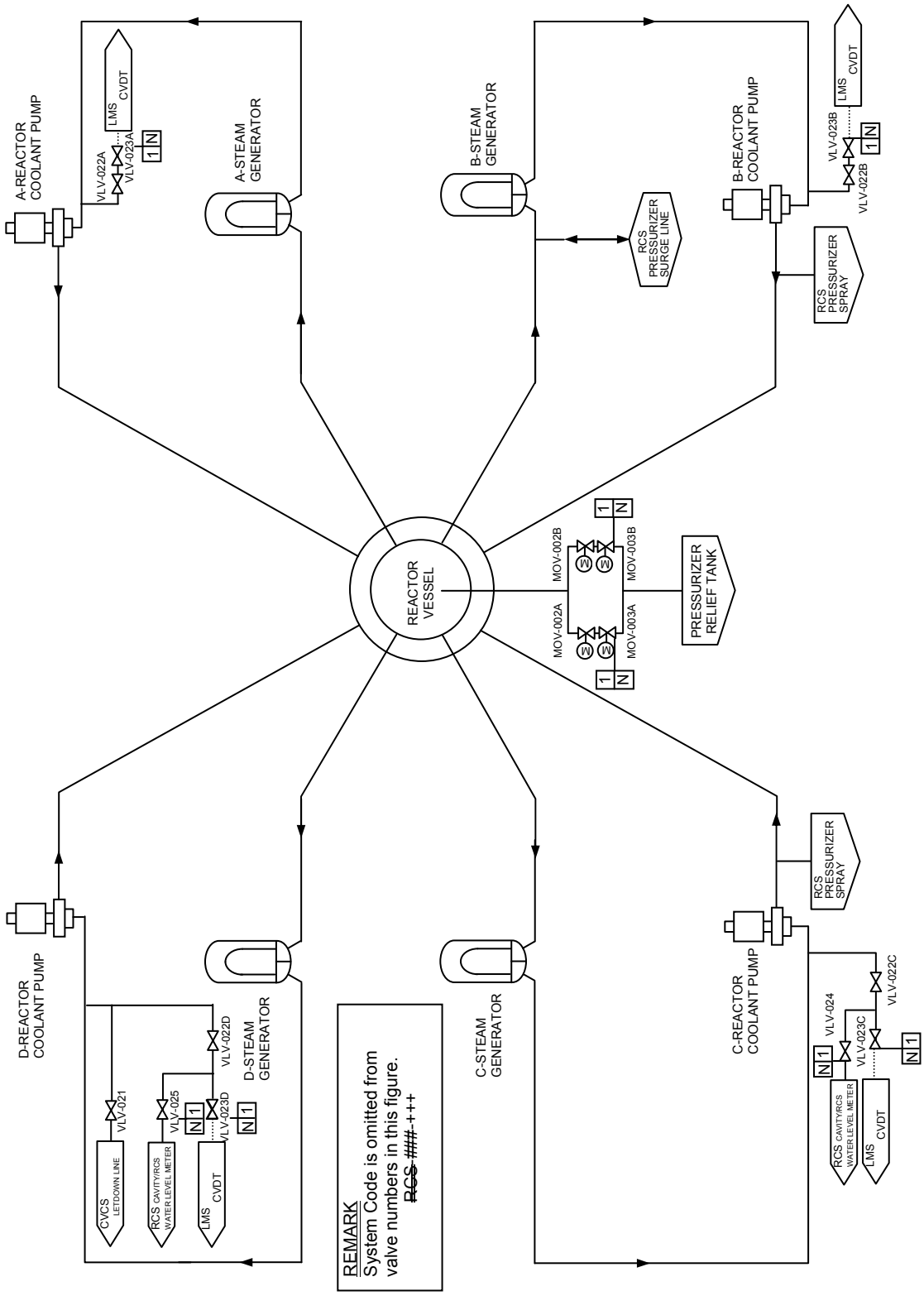

Figure 2.4.2-2 Reactor Coolant System (Sheet 1 of 2)

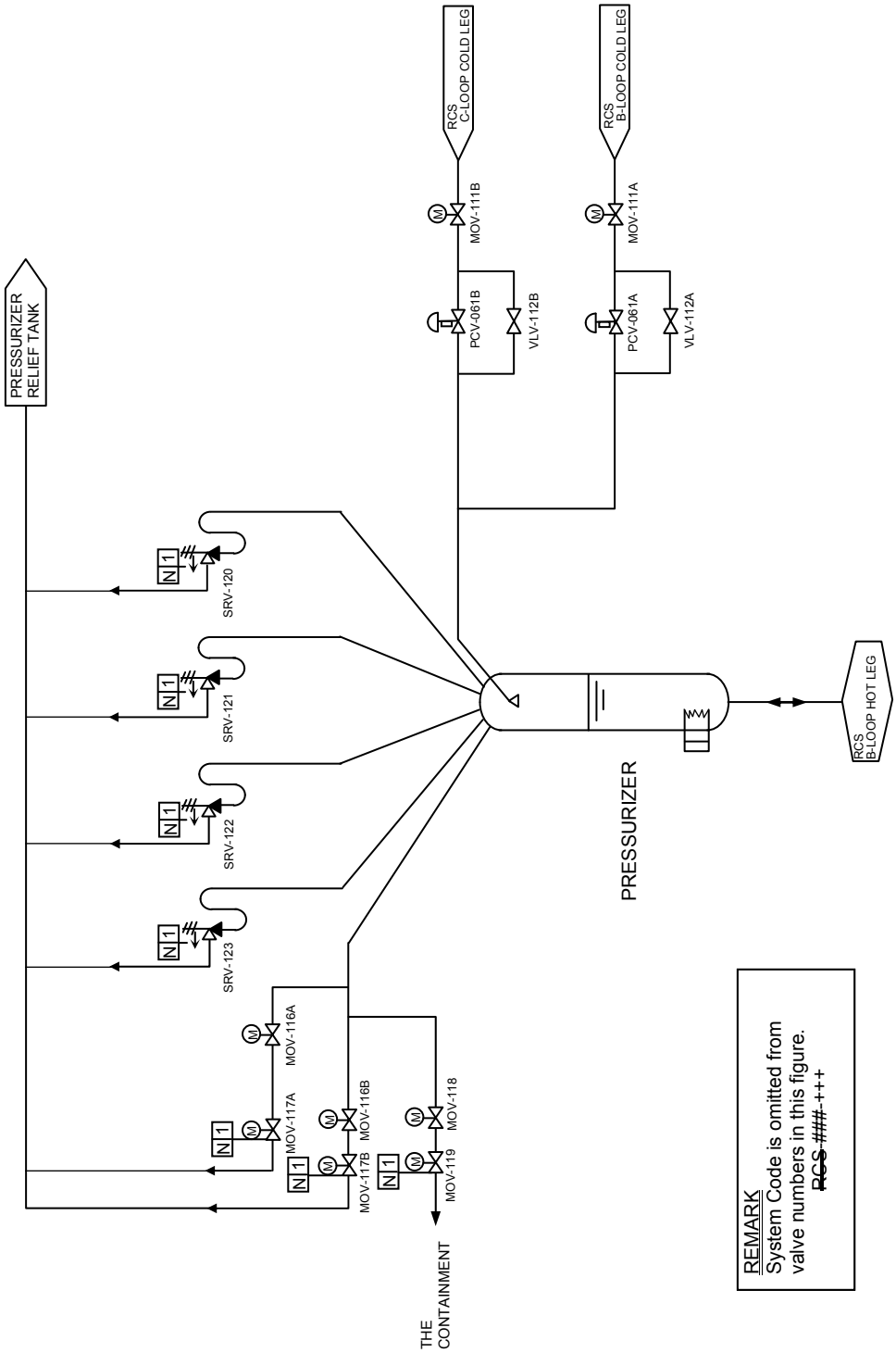

Figure 2.4.2-2 Reactor Coolant System (Sheet 2 of 2)

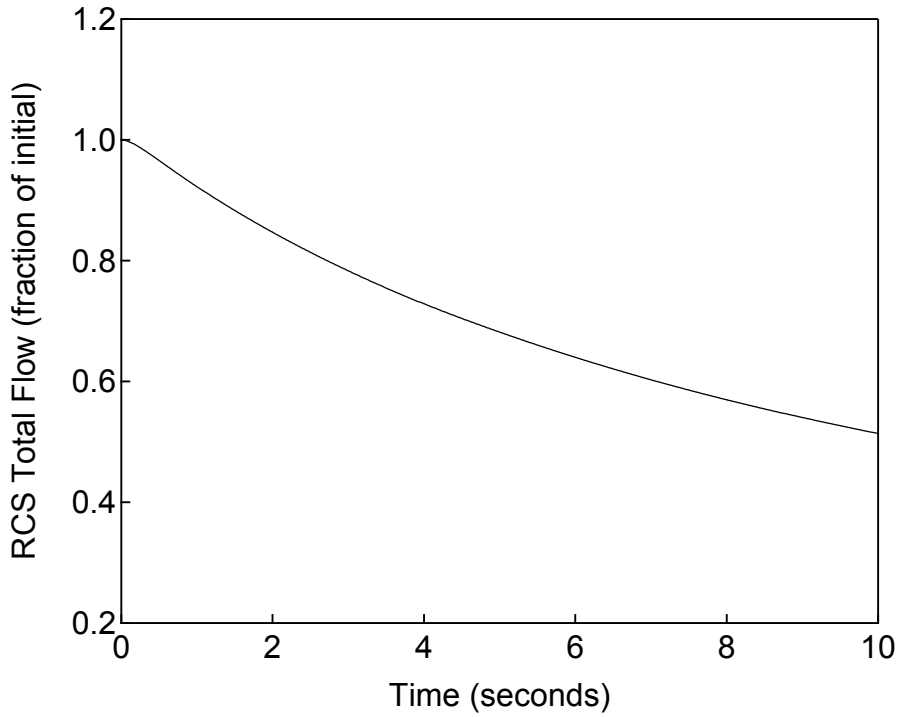

Figure 2.4.2-3 RCS Total Flow versus Time
Complete Loss of Forced Reactor Coolant Flow

2.4.3 Loose Parts Monitoring System (LPMS)

This system does not require ITAAC.

2.4.4 Emergency Core Cooling System (ECCS)

2.4.4.1 Design Description

The primary purpose of the ECCS is to remove stored energy and fission product decay heat from the reactor core following an accident. Four important functions of this safety-related system are to ensure that (1) fuel cladding temperature, oxidation and hydrogen production limits are not exceeded, (2) “coolable” core geometry is maintained, (3) long-term core cooling is available, and (4) the ECCS is capable of providing the containment isolation function, as described in Section 2.11.2, for piping penetrating the containment.

In combination with control rod insertion, the ECCS is designed to shut down and cool the reactor during the following accidents:

- LOCAs,
- Ejection of a control rod cluster assembly,
- Secondary steam system piping failure,
- Inadvertent operating of main steam relief or safety valve, and
- Steam generator tube failure.

The ECCS includes four 50%-capacity safety injection pump divisions.

The ECCS has the following functions:

Accumulator injection - The accumulator system stores borated water under pressure and automatically injects it into the RCS if the reactor coolant pressure decreases below the accumulator pressure.

High head injection - The high-head injection system takes suction from the RWSP and delivers borated water to the safety injection nozzles on the reactor vessel or to the hot legs of the RCS.

Emergency letdown - The emergency letdown system can be utilized to achieve a cold shutdown boration level in the RCS by directing reactor coolant to the RWSP and providing borated water from the RWSP to the RCS via the safety injection pumps.

Containment pH control - Sodium tetraborate decahydrate (NaTB) contained in baskets provides adjustment of the pH of the water in the containment following an accident. The pH adjustment maintains the desired post-accident pH conditions in the containment water, to enhance the iodine retention capacity in the containment and to avoid stress corrosion cracking of the austenitic stainless steel components.

1.a The functional arrangement of the ECCS is as described in the Design Description of Subsection 2.4.4.1 and in Table 2.4.4-1 and as shown in Figure 2.4.4-1.

1.b Each mechanical division of the ECCS (Divisions A, B, C & D) is physically separated from the other divisions, with the exception of inside the containment, so as not to preclude accomplishment of the safety function.

2.a.i The ASME Code Section III components of the ECCS identified in Table 2.4.4-2 are fabricated, installed and inspected in accordance with ASME Code Section III requirements.

2.a.ii The ASME Code Section III components of the ECCS identified in Table 2.4.4-2 are reconciled with the design requirements.

2.b.i The ASME Code Section III piping of the ECCS, including supports, identified in Table 2.4.4-3, is fabricated, installed, and inspected in accordance with ASME Code Section III requirements.

2.b.ii The ASME Code Section III piping of the ECCS, including supports, identified in Table 2.4.4-3, is reconciled with the design requirements.

3.a Pressure boundary welds in ASME Code Section III components, identified in Table 2.4.4-2, meet ASME Code Section III requirements for non-destructive examination of welds.

3.b Pressure boundary welds in ASME Code Section III piping, identified in Table 2.4.4-3, meet ASME Code Section III requirements for non-destructive examination of welds.

4.a The ASME Code Section III components, identified in Table 2.4.4-2, retain their pressure boundary integrity at their design pressure.

4.b The ASME Code Section III piping, identified in Table 2.4.4-3, retains its pressure boundary integrity at its design pressure.

5.a The seismic Category I equipment, identified in Table 2.4.4-2, can withstand seismic design basis loads without loss of safety function.

5.b The seismic Category I piping, including supports, identified in Table 2.4.4-3 can withstand seismic design basis loads without a loss of its safety function.

6.a The Class 1E equipment identified in Table 2.4.4-2 as being qualified for a harsh environment can withstand the environmental conditions that would exist before, during, and following a design basis accident without loss of safety function for the time required to perform the safety function.

6.b Class 1E equipment, identified in Table 2.4.4-2, is powered from its respective Class 1E division.

6.c Separation is provided between redundant divisions of ECCS Class 1E cables, and between Class 1E cables and non-Class 1E cables.

7.a Deleted.

7.b The ECCS provides RCS makeup, boration, and safety injection during design basis events.

7.c The ECCS provides pH adjustment of water flooding the containment following design basis accidents.

7.d The safety injection pumps have sufficient net positive suction head (NPSH).

8. Controls are provided in the MCR to open and close the remotely operated valves identified in Table 2.4.4-2.

9.a The motor-operated, air-operated and check valves, identified in Table 2.4.4-2 as having an active safety function, perform an active safety function to change position as indicated in the table.

9.b After loss of motive power, the remotely operated valves, identified in Table 2.4.4-2, assume the indicated loss of motive power position.

10.a Controls are provided in the MCR to start and stop the safety injection pumps identified in Table 2.4.4-4.

10.b The pumps identified in Table 2.4.4-4 start after receiving an ECCS actuation signal.

10.c A confirmatory-open interlock is provided to automatically open the accumulator discharge valve upon the receipt of an ECCS actuation signal or an above low pressurizer pressure (P11) setpoint signal.

11. Alarms and displays identified in Table 2.4.4-4 are provided in the MCR.

12. Alarms, displays and controls identified in Table 2.4.4-4 are provided in the RSC.

13. The piping identified in Table 2.4.4-3 as designed for LBB meets the LBB criteria, or an evaluation is performed of the protection from the dynamic effects of a rupture of the line.

14.a Deleted

14.b Deleted

2.4.4.2 Inspections, Tests, Analyses, and Acceptance Criteria

Table 2.4.4-5 describes the ITAAC for the ECCS.

The ITAAC associated with the ECCS equipment, components, and piping that comprise a portion of the CIS are described in Table 2.11.2-2.

Table 2.4.4-1 Emergency Core Cooling System Location of Equipment and Piping

System and Components	Location
ECC/CS Suction Strainers	Containment
Safety injection pumps	Reactor Building
Accumulators	Containment
Refueling Water Storage Pit	Containment
NaTB Baskets	Containment
NaTB Basket Containers	Containment
Safety injection piping and valves between the direct vessel injection penetration and including the check valve SIS-VLV-012 A, B, C, D upstream of the direct vessel injection penetration	Containment
Safety injection piping and valves upstream of and excluding the check valve SIS-VLV-012A,B,C,D upstream of the direct vessel injection penetration	Containment and Reactor Building
Hot leg injection piping downstream of and including the motor operated valves SIS-MOV-014 A ,B, C, D	Containment
Hot leg injection piping upstream of but excluding the motor operated valves SIS-MOV-014 A, B, C, D	Containment
Accumulator piping and valves on the RCS side of and including the check valves SIS-VLV-102 A, B, C, D	Containment
Accumulator piping and valves on the accumulator side of but excluding the check valves SIS-VLV-102 A, B, C, D	Containment
Emergency letdown isolation valves SIS-MOV-031A, 031D, 032A, 032D and piping between valves	Containment
Accumulator nitrogen vent piping up and including valves SIS-VLV-114, SIS-MOV-121A,B	Containment and Reactor Building
NaTB solution transfer piping	Containment
RWSP transfer piping	Containment
Refueling cavity drain piping	Containment

Table 2.4.4-2 Emergency Core Cooling System Equipment Characteristics (Sheet 1 of 4)

Equipment Name	Tag No.	ASME Code Section III Class	Seismic Category I	Remotely Operated Valve	Class 1E/ Qual. For Harsh Envir.	PSMS Control	Active Safety Function	Loss of Motive Power Position
ECC/CS Strainers	SIS-SST-001 A, B, C, D	-	Yes	-	-/-	-	-	-
Safety Injection Pumps	SIS-MPP-001 A, B, C, D	2	Yes	-	Yes/No	ECCS Actuation	Start	-
Accumulators	SIS-MTK-001 A, B, C, D	2	Yes	-	-	-	-	-
Refueling Storage Water Pit	RWS-MCT-001	-	Yes	-	-	-	-	-
NaTB Baskets	PHS-MEQ-001A~Y	-	Yes	-	-	-	-	-
NaTB Basket Containers	PHS-MTK-001A,B,C	2	Yes	-	-	-	-	-
Safety Injection Pump Suction Isolation Valves	SIS-MOV-001 A, B, C, D	2	Yes	Yes	Yes/ Yes	Remote Manual	Transfer Closed	As Is
Safety Injection Pump Discharge Containment Isolation Valves	SIS-MOV-009 A, B, C, D	2	Yes	Yes	Yes/ No	Remote Manual	Transfer Closed	As Is
Safety Injection Pump Discharge Containment Isolation Check Valves	SIS-VLV-010 A, B, C, D	2	Yes	-	-/-	-	Transfer Open/ Transfer Closed	-

Table 2.4.4-2 Emergency Core Cooling System Equipment Characteristics (Sheet 2 of 4)

Equipment Name	Tag No.	ASME Code Section III Class	Seismic Category I	Remotely Operated Valve	Class 1E/ Qual. For Harsh Envir.	PSMS Control	Active Safety Function	Loss of Motive Power Position
Direct Vessel Safety Injection Line Isolation Valves	SIS-MOV-011 A, B, C, D	2	Yes	Yes	Yes/ Yes	Remote Manual	Transfer Open/ Transfer Closed	As Is
Hot Leg Injection Isolation Valves	SIS-MOV-014 A, B, C, D	1	Yes	Yes	Yes/ Yes	Remote Manual	Transfer Open	As Is
Hot Leg Injection Check Valves	SIS-VLV-015 A, B, C, D	1	Yes	-	-/-	-	Transfer Open	-
Accumulator Discharge Valves	SIS-MOV-101 A, B, C, D	2	Yes	Yes	Yes/ Yes	ECCS Actuation, Above Low Pressureizer Pressure (P11) Setpoint	Transfer Open	As Is
						Remote Manual	Transfer Closed	
Accumulator Nitrogen Supply Line Isolation Valves	SIS-MOV-125 A, B, C, D	2	Yes	Yes	Yes/ Yes	Remote Manual	Transfer Open	As Is
Accumulator Nitrogen Discharge Valves	SIS-MOV-121 A, B	2	Yes	Yes	Yes/ Yes	Remote Manual	Transfer Open	As Is

Table 2.4.4-2 Emergency Core Cooling System Equipment Characteristics (Sheet 3 of 4)

Equipment Name	Tag No.	ASME Code Section III Class	Seismic Category I	Remotely Operated Valve	Class 1E/ Qual. For Harsh Envir.	PSMS Control	Active Safety Function	Loss of Motive Power Position
Accumulator Nitrogen Supply Containment Isolation Valve	SIS-AOV-114	2	Yes	Yes	Yes/No	Containment Isolation	Transfer Closed	Closed
Accumulator Nitrogen Supply Containment Isolation Check Valve	SIS-VLV-115	2	Yes	-	-/-	-	Transfer Closed	-
Accumulator Injection Line 1st Check Valves	SIS-VLV-102 A, B, C, D	1	Yes	No	-	-	Transfer Open	-
Accumulator Injection Line 2nd Check Valves	SIS-VLV-103 A, B, C, D	1	Yes	No	-	-	Transfer Open	-
Direct Vessel Injection Line 1st Check Valves	SIS-VLV-012 A, B, C, D	1	Yes	No	-	-	Transfer Open	-
Direct Vessel Injection Line 2nd Check Valves	SIS-VLV-013 A, B, C, D	1	Yes	No	-	-	Transfer Open	-
Emergency Letdown Line 1st Isolation Valves	SIS-MOV-031 A, D	1	Yes	Yes	Yes/ Yes	Remote Manual	Transfer Open/ Transfer Closed	As Is
Emergency Letdown Line 2nd Isolation Valves	SIS-MOV-032 A, D	1	Yes	Yes	Yes/ Yes	Remote Manual	Transfer Open/ Transfer Closed	As Is

Table 2.4.4-2 Emergency Core Cooling System Equipment Characteristics (Sheet 4 of 4)

Equipment Name	Tag No.	ASME Code Section III Class	Seismic Category I	Remotely Operated Valve	Class 1E/ Qual. For Harsh Envir.	PSMS Control	Active Safety Function	Loss of Motive Power Position
Safety Injection Pump Discharge Check Valves	SIS-VLV-004 A,B,C,D	2	Yes	No	—	—	Transfer Open	—
Safety Injection Pump Minimum Flow	SIS-FT-072, 073, 074, 075	—	Yes	—	Yes/No	—	—	—
Accumulator Water Level	SIS-LT-010, 020, 030,040	—	Yes	—	Yes/Yes	—	—	—
Accumulator Pressure	SIS-PT-010, 020, 030, 040	—	Yes	—	Yes/Yes	—	—	—
Safety Injection Pump Suction Pressure	SIS-PT-060, 061, 062, 063	—	Yes	—	Yes/No	—	—	—
Safety Injection Pump Discharge Pressure	SIS-PT-064, 065, 066, 067	—	Yes	—	Yes/No	—	—	—
Refueling Water Storage Pit Water Level	RWS-LT-010, 011, 012, 013	—	Yes	—	Yes/Yes	—	—	—
Safety Injection Pump Discharge Flow	SIS-FT-062, 063, 064, 065	—	Yes	—	Yes/No	—	—	—

NOTE:
Dash (-) indicates not applicable

Table 2.4.4-3 Emergency Core Cooling System Piping Characteristics

Pipe Line Name	ASME Code Section III Class	Leak Before Break	Seismic Category I
SI piping and valves between the DVI penetration and including the check valve SIS-VLV-012 A, B, C, D upstream of the DVI penetration	1	No	Yes
SI piping and valves upstream of and excluding the check valve SIS-VLV-012 A, B, C, D upstream of the DVI penetration	2	No	Yes
Hot leg injection piping downstream of and including the 4 motor operated valves SIS-MOV-014 A, B, C, D	1	No	Yes
Hot leg injection piping upstream of but excluding the 4 motor operated valves SIS-MOV-014 A, B, C, D	2	No	Yes
Accumulator piping and valves on the RCS side of and including the check valves SIS-VLV-102 A, B, C, D	1	Yes	Yes
Accumulator piping and valves on the accumulator side of but excluding the check valves SIS-VLV-102 A, B, C, D	2	No	Yes
Emergency letdown isolation valves SIS-MOV-031A, 031D, 032A, 032D and piping between valves	1	No	Yes
Accumulator nitrogen vent piping up and including valves SIS-AOV-114, SIS-MOV-121A,B	2	No	Yes
NaTB solution transfer piping	2	No	Yes
RWSP transfer piping	2	No	Yes
Refueling cavity drain piping	2	No	Yes

Table 2.4.4-4 Emergency Core Cooling System Equipment, Alarms, Displays and Control Functions (Sheet 1 of 2)

Equipment/Instrument Name	MCR/RSC Alarm	MCR Display	MCR/RSC Control Function	RSC Display
Safety Injection Pumps (SIS-MPP-001A,B,C,D)	No	Yes	Yes	Yes
Safety Injection Pump Suction Isolation Valves (SIS-MOV-001A,B,C,D)	No	Yes	Yes	Yes
Safety Injection Pump Discharge Containment Isolation Valves (SIS-MOV-009A,B,C,D)	No	Yes	Yes	Yes
Direct Vessel Safety Injection Line Isolation Valves (SIS-MOV-011A,B,C,D)	No	Yes	Yes	Yes
Hot Leg Injection Isolation Valves (SIS-MOV-014A,B,C,D)	No	Yes	Yes	Yes
Emergency Letdown Line 1st, 2nd Isolation Valves (SIS-MOV-031A,D and 032A,D)	No	Yes	Yes	Yes
Accumulator Discharge Valves (SIS-MOV-101A,B,C,D)	Yes	Yes	Yes	Yes
Accumulator Nitrogen Supply Line Isolation Valves (SIS-MOV-125A,B,C,D)	No	Yes	Yes	Yes
Accumulator Nitrogen Discharge Valves (SIS-MOV-121A,B)	No	Yes	Yes	Yes
Safety Injection Pump Discharge Flow (SIS-FT-062,063,064,065)	No	Yes	No	Yes
Safety Injection Pump Minimum Flow (SIS-FT-072,073,074,075)	No	Yes	No	Yes
Safety Injection Pump Discharge pressure (SIS-PT-064,065,066,067)	No	Yes	No	Yes
Safety Injection Pump Suction pressure (SIS-PT-060,061,062,063)	No	Yes	No	Yes

Table 2.4.4-4 Emergency Core Cooling System Equipment, Alarms, Displays and Control Functions (Sheet 2 of 2)

Equipment/Instrument Name	MCR/RSC Alarm	MCR Display	MCR/RSC Control Function	RSC Display
Accumulator Pressure (SIS-PT-010, 020,030,040)	Yes	Yes	No	Yes
Accumulator Water Level (SIS-LT-010,020,030,040)	Yes	Yes	No	Yes
Refueling Water Storage Pit Water Level (RWS-LT-010,011,012,013)	Yes(1)	Yes	No	Yes
Accumulator Nitrogen Supply Containment Isolation valve (SIS-AOV-114)	No	Yes	Yes	Yes

NOTE:
1. Alarm function is not required for “RWS-LT-010” and “RWS-LT-012”.

Table 2.4.4-5 Emergency Core Cooling System Inspections, Tests, Analyses, and Acceptance Criteria (Sheet 1 of 10)

Design Commitment	Inspections, Tests, Analyses	Acceptance Criteria
1.a The functional arrangement of the ECCS is as described in the Design Description of Subsection 2.4.4.1 and in Table 2.4.4-1 and as shown in Figure 2.4.4-1.	1.a Inspection of the as-built ECCS will be performed.	1.a The as-built ECCS conforms to the functional arrangement as described in the Design Description of Subsection 2.4.4.1 and in Table 2.4.4-1 and as shown in Figure 2.4.4-1.
1.b Each mechanical division of the ECCS (Divisions A, B, C & D) is physically separated from the other divisions, with the exception of inside the containment, so as not to preclude accomplishment of the safety function.	1.b Inspections and analysis of the as-built ECCS will be performed.	1.b A report exists and concludes that each mechanical division of the as-built ECCS is physically separated from other mechanical divisions of the system by spatial separation, barriers, or enclosures, with the exception of inside the containment, so as to assure that the functions of the safety-related system are maintained.
2.a.i The ASME Code Section III components of the ECCS, identified in Table 2.4.4-2 are fabricated, installed and inspected in accordance with ASME Code Section III requirements.	2.a.i Inspection of the as-built ASME Code Section III components of the ECCS, identified in Table 2.4.2-2, will be performed.	2.a.i The ASME Code Section III data report(s) (certified, when required by ASME Code) and inspection reports (including N-5 Data Reports where applicable) exist and conclude that the as-built ASME Code Section III components of the ECCS identified in Table 2.4.4-2 are fabricated, installed, and inspected in accordance with ASME Code Section III requirements.
2.a.ii The ASME Code Section III components of the ECCS identified in Table 2.4.4-2 are reconciled with the design requirements.	2.a.ii A reconciliation analysis of the components identified in Table 2.4.4-2 using as-designed and as-built information and ASME Code Section III design report(s) (NCA-3550) will be performed.	2.a.ii The ASME Code Section III design report(s) (certified, when required by ASME Code) exist and conclude that the design reconciliation has been completed in accordance with the ASME Code Section III for the as-built components of the ECCS identified in Table 2.4.4-2. The report documents the results of the reconciliation analysis.

Table 2.4.4-5 Emergency Core Cooling System Inspections, Tests, Analyses, and Acceptance Criteria (Sheet 2 of 10)

Design Commitment	Inspections, Tests, Analyses	Acceptance Criteria
2.b.i The ASME Code Section III piping of the ECCS, including supports, identified in Table 2.4.4-3, is fabricated, installed, and inspected in accordance with ASME Code Section III requirements.	2.b.i Inspection of the as-built ASME Code Section III piping of the ECCS, including supports, identified in Table 2.4.4-3, will be performed.	2.b.i The ASME Code Section III data report(s) (certified when required by ASME Code) and inspection reports (including N-5 Data Reports where applicable) exist and conclude that the as-built ASME Code Section III piping of the ECCS, including supports, identified in Table 2.4.4-3, is fabricated, installed, and inspected in accordance with ASME Code Section III requirements.
2.b.ii The ASME Code Section III piping of the ECCS, including supports, identified in Table 2.4.4-3, is reconciled with the design requirements.	2.b.ii A reconciliation analysis of the piping of the ECCS, including supports, identified in Table 2.4.4-3, using as-designed and as-built information and ASME Code Section III design report(s) (NCA-3550) will be performed.	2.b.ii The ASME Code Section III design report(s) (certified, when required by ASME Code) exist and conclude that the design reconciliation has been completed in accordance with the ASME Code, for the as-built ASME Code Section III piping of the ECCS, including supports, identified in Table 2.4.4-3. The report documents the results of the reconciliation analysis.
3.a Pressure boundary welds in ASME Code Section III components, identified in Table 2.4.4-2, meet ASME Code Section III requirements for non-destructive examination of welds.	3.a Inspections of the as-built pressure boundary welds in ASME Code Section III components identified in Table 2.4.4-2, will be performed in accordance with the ASME Code Section III.	3.a The ASME Code Section III code reports exist and conclude that the ASME Code Section III requirements are met for non-destructive examination of the as-built pressure boundary welds in ASME Code Section III components identified in Table 2.4.4-2.
3.b Pressure boundary welds in ASME Code Section III piping, identified in Table 2.4.4-3, meet ASME Code Section III requirements for non-destructive examination of welds.	3.b Inspections of the as-built pressure boundary welds in ASME Code Section III piping identified in Table 2.4.4-3, will be performed in accordance with the ASME Code Section III.	3.b The ASME Code Section III code reports exist and conclude that the ASME Code Section III requirements are met for non-destructive examination of as-built pressure boundary welds in ASME Code Section III piping identified in Table 2.4.4-3.

Table 2.4.4-5 Emergency Core Cooling System Inspections, Tests, Analyses, and Acceptance Criteria (Sheet 3 of 10)

Design Commitment	Inspections, Tests, Analyses	Acceptance Criteria
4.a The ASME Code Section III components, identified in Table 2.4.4-2, retain their pressure boundary integrity at their design pressure.	4.a A hydrostatic test will be performed on the as-built components, identified in Table 2.4.4-2, required by the ASME Code Section III to be hydrostatically tested.	4.a ASME Code Data Report(s) exist and conclude that the results of the hydrostatic test of the as-built components identified in Table 2.4.4-2 as ASME Code Section III conform to the requirements of the ASME Code Section III.
4.b The ASME Code Section III piping, identified in Table 2.4.4-3, retains its pressure boundary integrity at its design pressure.	4.b A hydrostatic test will be performed on the as-built piping, identified in Table 2.4.4-3, required by the ASME Code Section III to be hydrostatically tested.	4.b ASME Code Data Report(s) exist and conclude that the results of the hydrostatic test of the as-built piping identified in Table 2.4.4-3 as ASME Code Section III conform to the requirements of the ASME Code Section III.
5.a The seismic Category I equipment, identified in Table 2.4.4-2, can withstand seismic design basis loads without loss of safety function.	5.a.i Inspections will be performed to verify that the as-built seismic Category I equipment identified in Table 2.4.4-2 is located in a seismic Category I structure.	5.a.i The as-built seismic Category I equipment identified in Table 2.4.4-2 is located in a seismic Category I structure.
	5.a.ii Type tests, analyses, or a combination of type tests and analyses of seismic Category I equipment identified in Table 2.4.4-2 will be performed using analytical assumptions, or will be performed under conditions, which bound the seismic design basis requirements.	5.a.ii A report exists and concludes that the seismic Category I equipment identified in Table 2.4.4-2 can withstand seismic design basis loads without loss of safety function.
	5.a.iii Inspections and analyses will be performed to verify that the as-built seismic Category I equipment identified in Table 2.4.4-2 including anchorages, is seismically bounded by the tested or analyzed conditions.	5.a.iii A report exists and concludes that the as-built seismic Category I equipment identified in Table 2.4.4-2, including anchorages, is seismically bounded by the tested or analyzed conditions.

Table 2.4.4-5 Emergency Core Cooling System Inspections, Tests, Analyses, and Acceptance Criteria (Sheet 4 of 10)

Design Commitment		Inspections, Tests, Analyses		Acceptance Criteria	
5.b	The seismic Category I piping, including supports, identified in Table 2.4.4-3 can withstand seismic design basis loads without a loss of its safety function.	5.b.i	Inspections will be performed to verify that the as-built seismic Category I piping, including supports, identified in Table 2.4.4-3 is supported by a seismic Category I structure(s).	5.b.i	The as-built seismic Category I piping, including supports, identified in Table 2.4.4-3 is supported by a seismic Category I structure(s).
		5.b.ii	Inspections and analyses will be performed to verify that the as-built seismic Category I piping, including supports, identified in Table 2.4.4-3 can withstand seismic design basis loads without a loss of its safety function.	5.b.ii	A report exists and concludes that the as-built seismic Category I piping, including supports, identified in Table 2.4.4-3 can withstand seismic design basis loads without a loss of its safety function.
6.a	The Class 1E equipment identified in Table 2.4.4-2 as being qualified for a harsh environment can withstand the environmental conditions that would exist before, during, and following a design basis accident without loss of safety function for the time required to perform the safety function.	6.a.i	Type tests or a combination of type tests and analyses using the design environmental conditions, or under the conditions which bound the design environmental conditions, will be performed on the Class 1E equipment identified in Table 2.4.4-2 as being qualified for a harsh environment.	6.a.i	A report exists and concludes that the Class 1E equipment identified in Table 2.4.4-2 as being qualified for a harsh environment can withstand the environmental conditions that would exist before, during, and following a design basis accident without loss of safety function for the time required to perform the safety function.
		6.a.ii	Inspection will be performed on the as-built Class 1E equipment identified in Table 2.4.4-2 as being qualified for a harsh environment and the associated wiring, cables, and terminations located in a harsh environment.	6.a.ii	The as-built Class 1E equipment and the associated wiring, cables, and terminations identified in Table 2.4.4-2 as being qualified for a harsh environment are bounded by type tests or a combination of type tests and analyses.

Table 2.4.4-5 Emergency Core Cooling System Inspections, Tests, Analyses, and Acceptance Criteria (Sheet 5 of 10)

Design Commitment		Inspections, Tests, Analyses		Acceptance Criteria	
6.b	Class 1E equipment, identified in Table 2.4.4-2, is powered from its respective Class 1E division.	6.b	A test will be performed on each division of the as-built Class 1E equipment identified in Table 2.4.4-2 by providing a simulated test signal only in the Class 1E division under test.	6.b	The simulated test signal exists at the as-built Class 1E equipment identified in Table 2.4.4-2 under test.
6.c	Separation is provided between redundant divisions of ECCS Class 1E cables, and between Class 1E cables and non-Class 1E cables.	6.c	Inspections of the as-built Class 1E divisional cables will be performed.	6.c	Physical separation or electrical isolation is provided in accordance with RG 1.75, between the as-built cables of redundant ECCS Class 1E divisions and between Class 1E cables and non-Class 1E cables.
7.a	Deleted.	7.a	Deleted.	7.a	Deleted.
7.b	The ECCS provides RCS makeup, boration, and safety injection during design basis events.	7.b.i.a	An injection test with low tank pressure condition for each as-built accumulator will be conducted. The test will be initiated by opening isolation valve(s) in the piping being tested. Each as-built accumulator will be partially filled with water and pressurized with nitrogen. All valves in these lines will be open during the test. An analysis will be performed to determine the water volume injected.	7.b.i.a	A report exists and concludes that the total water volume injected from each as-built accumulator into the reactor vessel is $\geq$2126 ft^3. The water volume injected from each accumulator into reactor vessel at large flow rate (prior to flow switching to small flow rate) is $\geq$1326.8 ft^3.
		7.b.i.b	Tests and analyses of the as-built accumulator system will be performed to calculate the resistance coefficients of the as-built accumulator system.	7.b.i.b	A report exists and concludes that the calculated resistance coefficients of the as-built accumulator system (based on a cross-section area of 0.6827 ft^2) meet the requirements shown in Table 2.4.4-6.

Table 2.4.4-5 Emergency Core Cooling System Inspections, Tests, Analyses, and Acceptance Criteria (Sheet 6 of 10)

Design Commitment	Inspections, Tests, Analyses	Acceptance Criteria
	7.b.ii The as-built safety injection pump injection test will be performed. Analysis will be performed to convert the test results from the test conditions to the design condition.	7.b.ii A report exists and concludes that each as-built safety injection pump has a pump differential head of no less than 3937 ft and no more 4527 ft at the minimum flow, and injects no less than 1259 gpm and no more than 1462 gpm of RWSP water into the reactor vessel at atmospheric pressure.
	7.b.iii.a Inspections of each as-built accumulator will be conducted.	7.b.iii a The volume of each as-built accumulator is at least 3,180 ft^3
	7.b.iii.b Inspections of the RWSP will be conducted	7.b.iii.b The volume of the as-built RWSP is at least 81,230 ft^3
	7.b.iv Inspection and analysis of the as-built ECC/CS suction strainers will be conducted.	7.b.iv A report exists and concludes that each of the four as-built ECC/CS suction strainers have the following features: stainless steel materials of construction for corrosion resistance; a minimum strainer surface area of 3510 square feet; perforated plate with maximum hole diameter of 0.066 inches; remains submerged under design basis accident conditions ; achieves head loss consistent with design basis NPSH evaluations
	7.b.v Inspections and analyses of the as-built coatings used in the containment will be conducted.	7.b.v A report exists and concludes that the as-built coatings used in the containment are consistent with the ECC/CS suction strainer debris generation, debris transport and downstream effects evaluations.

Table 2.4.4-5 Emergency Core Cooling System Inspections, Tests, Analyses, and Acceptance Criteria (Sheet 7 of 10)

Design Commitment	Inspections, Tests, Analyses	Acceptance Criteria
	7.b.vi Inspections of the as-built insulation used in the containment will be conducted	7.b.vi A report exists and concludes that the as-built insulation in containment is consistent with design basis evaluations of suction strainer performance and downstream effects.
7.c The ECCS provides pH adjustment of water flooding the containment following design basis accidents.	7.c Inspections and analyses of the as-built NaTB baskets will be conducted.	7.c A report exists and concludes that the as-built NaTB baskets contain a total calculated weight of NaTB of ≥44,100 pounds. The tops of the as-built NaTB baskets are located below plant elevation 131 ft, 6 in.
7.d The safety injection pumps have sufficient net positive suction head (NPSH).	7.d Tests to measure the as-built safety injection pump suction pressure will be performed. Inspections and analysis to determine NPSH available to each safety injection pump will be performed. The analysis will consider vendor test results of required NPSH and the effects of: - pressure losses for pump inlet piping and components, - pressure losses for pump suction strainers due to debris blockage, - suction from the RWSP water level at the minimum value.	7.d A report exists and concludes that the as-built NPSH available to each safety injection pump is greater than the NPSH required.
8. Controls are provided in the MCR to open and close the remotely operated valves identified in Table 2.4.4-2.	8. Tests will be performed on the as-built remotely operated valves identified in Table 2.4.4-2 using controls in the as-built MCR.	8. Controls in the as-built MCR open and close the as-built remotely operated valves identified in Table 2.4.4-2.

Table 2.4.4-5 Emergency Core Cooling System Inspections, Tests, Analyses, and Acceptance Criteria (Sheet 8 of 10)

Design Commitment		Inspections, Tests, Analyses		Acceptance Criteria	
9.a	The motor-operated, air-operated and check valves, identified in Table 2.4.4-2 as having an active safety function, perform an active safety function to change position as indicated in the table.	9.a.i	Type tests or a combination of type tests and analyses of motor-operated and air-operated valves identified in Table 2.4.4-2 as having an active safety function will be performed that demonstrate the capability of the valve to operate under its design conditions.	9.a.i	A report exists and concludes that each motor-operated and air-operated valve identified in Table 2.4.4-2 as having an active safety function changes position as indicated in Table 2.4.4-2 under design conditions.
		9.a.ii	Tests of the as-built motor-operated and air-operated valves identified in Table 2.4.4-2 as having an active safety function will be performed under preoperational flow, differential pressure, and temperature conditions.	9.a.ii	Each as-built motor-operated and air-operated valve identified in Table 2.4.4-2 as having an active safety function changes position as indicated in Table 2.4.4-2 under preoperational test conditions.
		9.a.iii	Inspections will be performed of the as-built motor-operated and air-operated valves identified in Table 2.4.4-2 as having an active safety function.	9.a.iii	Each as-built motor-operated and air-operated valve identified in Table 2.4.4-2 as having an active safety function is bounded by the type tests, or a combination of type tests and analyses.
		9.a.iv	Tests of the as-built check valves identified in Table 2.4.4-2 as having an active safety function will be performed under preoperational test pressure, temperature, and fluid flow conditions.	9.a.iv	Each as-built check valve identified in Table 2.4.4-2 as having an active safety function changes position as indicated in Table 2.4.4-2 under preoperational test conditions.
9.b	After loss of motive power, the remotely operated valves, identified in Table 2.4.4-2, assume the indicated loss of motive power position.	9.b.	Tests of the as-built remotely operated valves identified in Table 2.4.4-2 will be performed under the conditions of loss of motive power.	9.b	Upon loss of motive power, each as-built remotely operated valve identified in Table 2.4.4-2 assumes the indicated loss of motive power position.

Table 2.4.4-5 Emergency Core Cooling System Inspections, Tests, Analyses, and Acceptance Criteria (Sheet 9 of 10)

Design Commitment	Inspections, Tests, Analyses	Acceptance Criteria
10.a Controls are provided in the MCR to start and stop the safety injection pumps identified in Table 2.4.4-4.	10.a Tests will be performed on the as-built safety injection pumps identified in Table 2.4.4-4 using controls in the as-built MCR.	10.a Controls in the as-built MCR start and stop the as-built safety injection pumps identified in Table 2.4.4-4.
10.b The pumps identified in Table 2.4.4-4 start after receiving an ECCS actuation signal.	10.b Tests will be performed on the as-built pumps identified in Table 2.4.4-4 using simulated signals.	10.b The as-built pumps identified in Table 2.4.4-4 start after receiving a simulated ECCS actuation signal.
10.c A confirmatory-open interlock is provided to automatically open the accumulator discharge valve upon the receipt of an ECCS actuation signal or an above low pressurizer pressure (P11) setpoint signal.	10.c Tests will be performed using simulated signals.	10.c The as-built accumulator discharge valves identified in Table 2.4.4-2 automatically opens upon either the receipt of simulated ECCS actuation or above low pressurizer pressure signal.
11. Alarms and displays identified in Table 2.4.4-4 are provided in the MCR.	11. Inspection will be performed for retrievability of the alarms and displays identified in Table 2.4.4-4 in the as-built MCR.	11. Alarms and displays identified in Table 2.4.4-4 can be retrieved in the as-built MCR.
12. Alarms, displays and controls identified in Table 2.4.4-4 are provided in the RSC.	12.i Inspection will be performed for retrievability of the alarms and displays identified in Table 2.4.4-4 in the as-built RSC.	12.i Alarmsand displays identified in Table 2.4.4-4 can be retrieved in the as-built RSC.
	12.ii Tests of the as-built RSC control functions identified in Table 2.4.4-4 will be performed.	12.ii Controls in the as-built RSC operate the as-built equipment identified in Table 2.4.4-4 with an RSC control function.
13. The piping identified in Table 2.4.4-3 as designed for LBB meets the LBB criteria, or an evaluation is performed of the protection from the dynamic effects of a rupture of the line.	13. Inspections of the as-built piping identified in Table 2.4.4-3 will be performed based on the evaluation report for LBB or for the evaluation of the protection from dynamic effects of a pipe break, as specified in Section 2.3.	13. An LBB evaluation report exists and concludes that the LBB acceptance criteria are met by the as-built piping identified in Table 2.4.4-3 and piping materials, or a pipe break hazards analysis report exists and concludes that protection is provided from the dynamic effects of a line break is provided.

Table 2.4.4-5 Emergency Core Cooling System Inspections, Tests, Analyses, and Acceptance Criteria (Sheet 10 of 10)

Design Commitment	Inspections, Tests, Analyses	Acceptance Criteria
14.a Deleted	14.a Deleted.	14.a Deleted.
14.b Deleted.	14.b Deleted.	14.b Deleted.

Table 2.4.4-6 Requirement for Accumulator System Resistance Coefficient

Operation mode	Resistance coefficient (based on a cross-section area of 0.6827 ft^2)
Large flow injection	$\geq \frac{1}{[x\{0.7787 - 0.6889\exp(-0.5238\sigma_V)\}]^2} + 461.7f + 1.99$ $\leq \frac{1}{[y\{0.7787 - 0.6889\exp(-0.5238\sigma_V)\}]^2} + 564.3f + 2.21$ Where σ_V :cavitation factor $x = 1 + \frac{\text{uncertainty}(\%)}{100}$ $y = 1 - \frac{\text{uncertainty}(\%)}{100}$ f : friction factor of piping
Small flow injection	$\geq \frac{1}{[x\{0.07197 - 0.01904\exp(-6.818\sigma_V)\}]^2} + 461.7f + 1.99$ $\leq \frac{1}{[y\{0.07197 - 0.01904\exp(-6.818\sigma_V)\}]^2} + 564.3f + 2.21$ Where σ_V :cavitation factor $x = 1 + \frac{\text{uncertainty}(\%)}{100}$ $y = 1 - \frac{\text{uncertainty}(\%)}{100}$ f : friction factor of piping

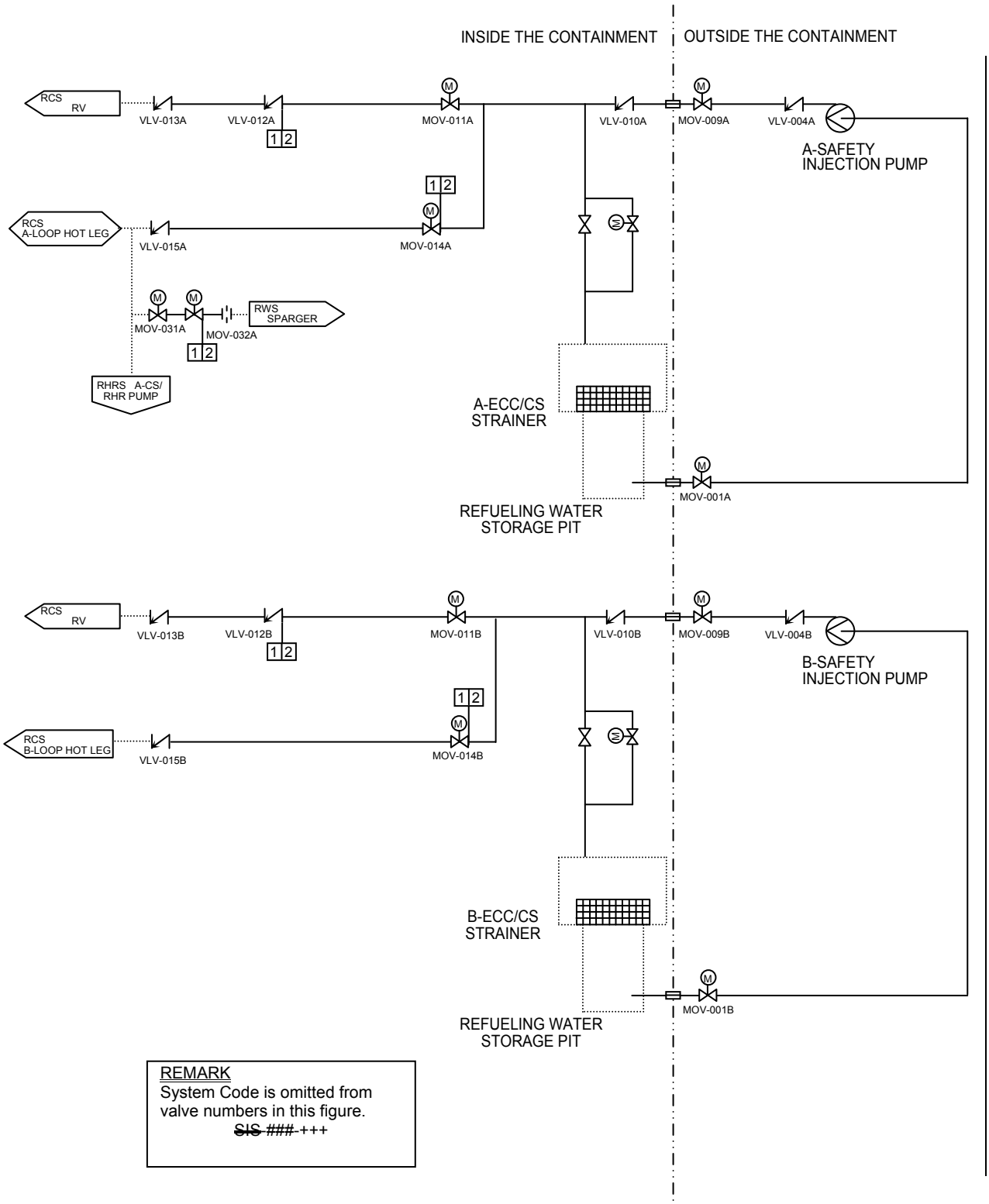

Figure 2.4.4-1 Emergency Core Cooling System (Sheet 1 of 4)

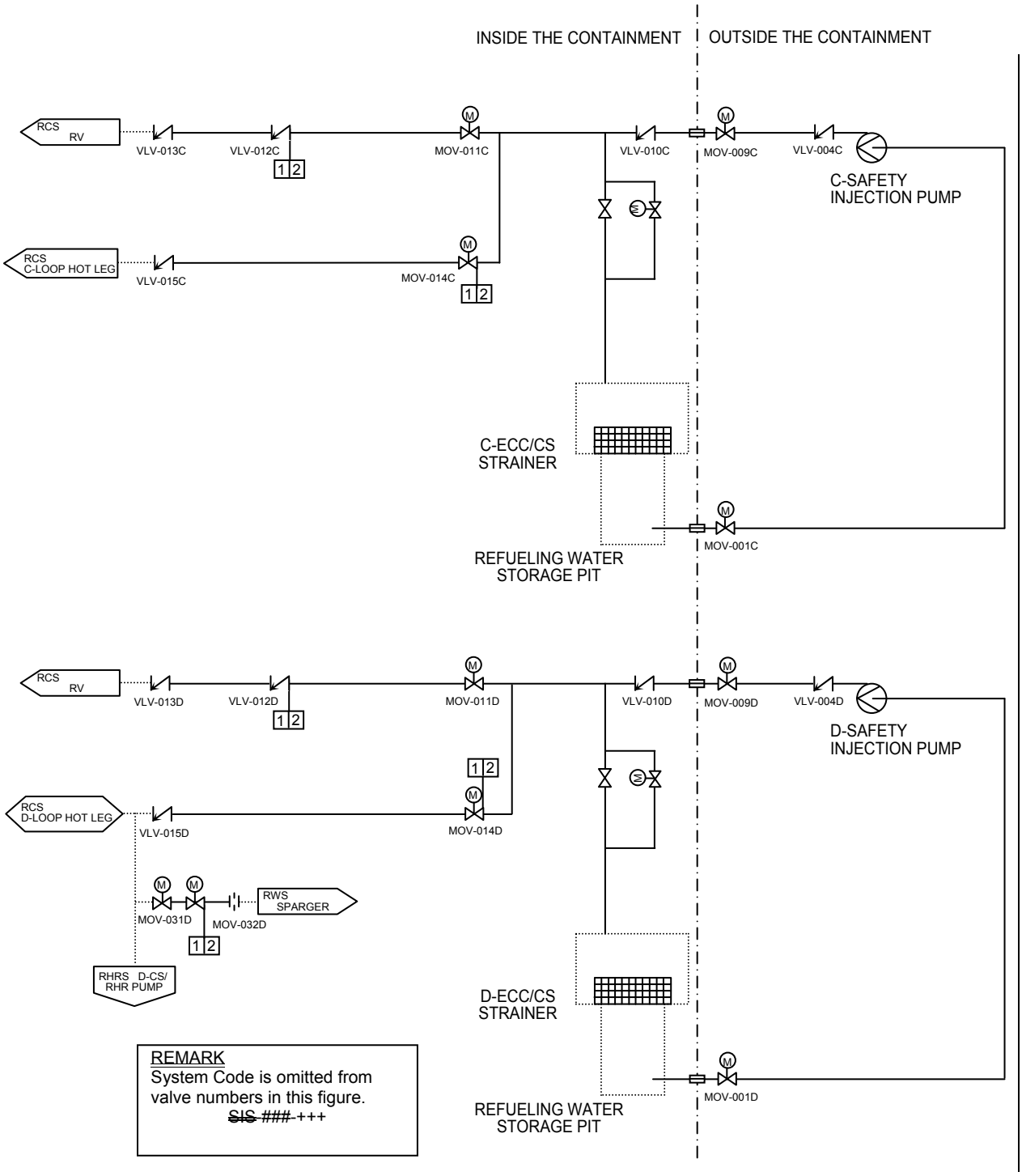

Figure 2.4.4-1 Emergency Core Cooling System (Sheet 2 of 4)

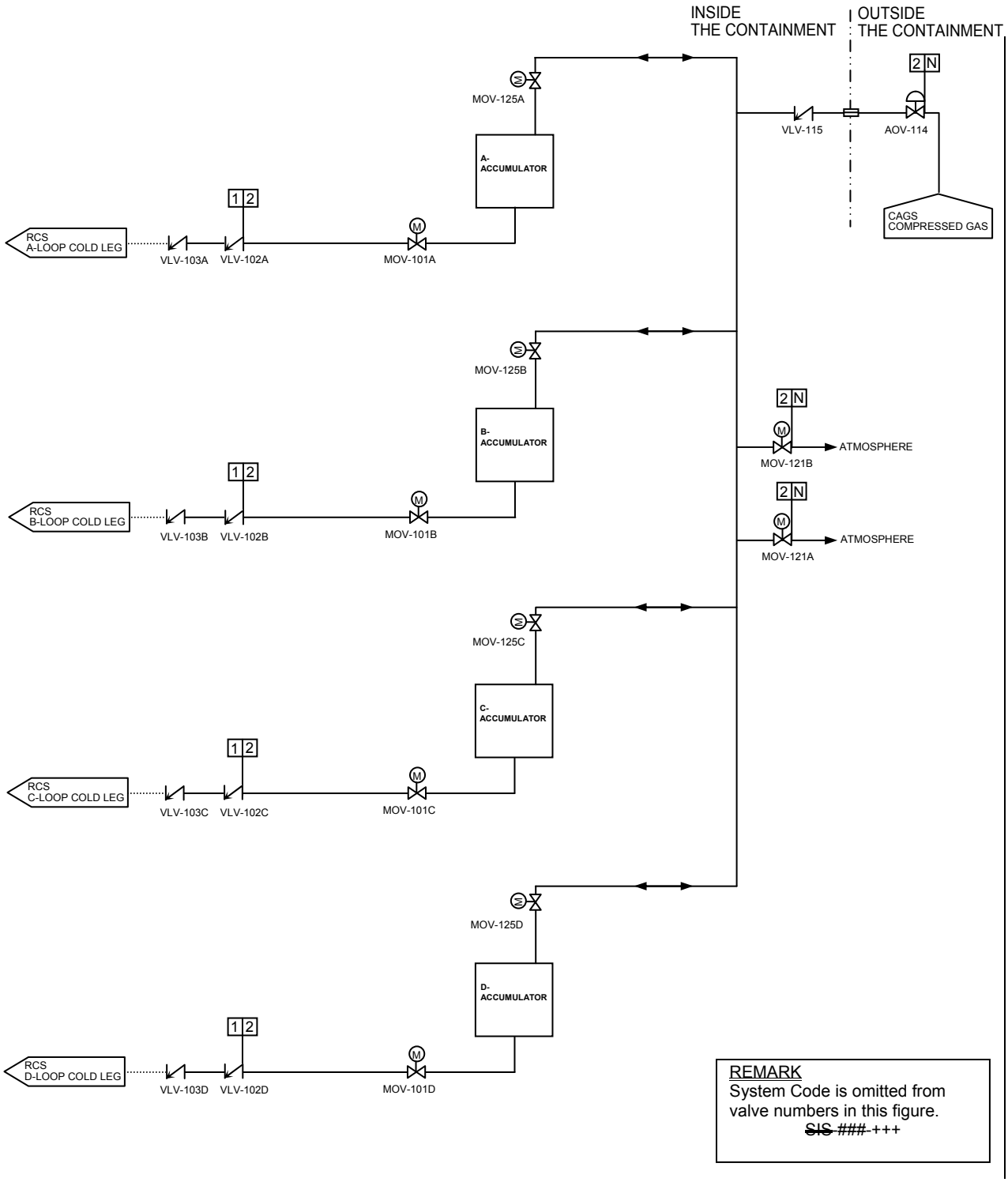

Figure 2.4.4-1 Emergency Core Cooling System (Sheet 3 of 4)

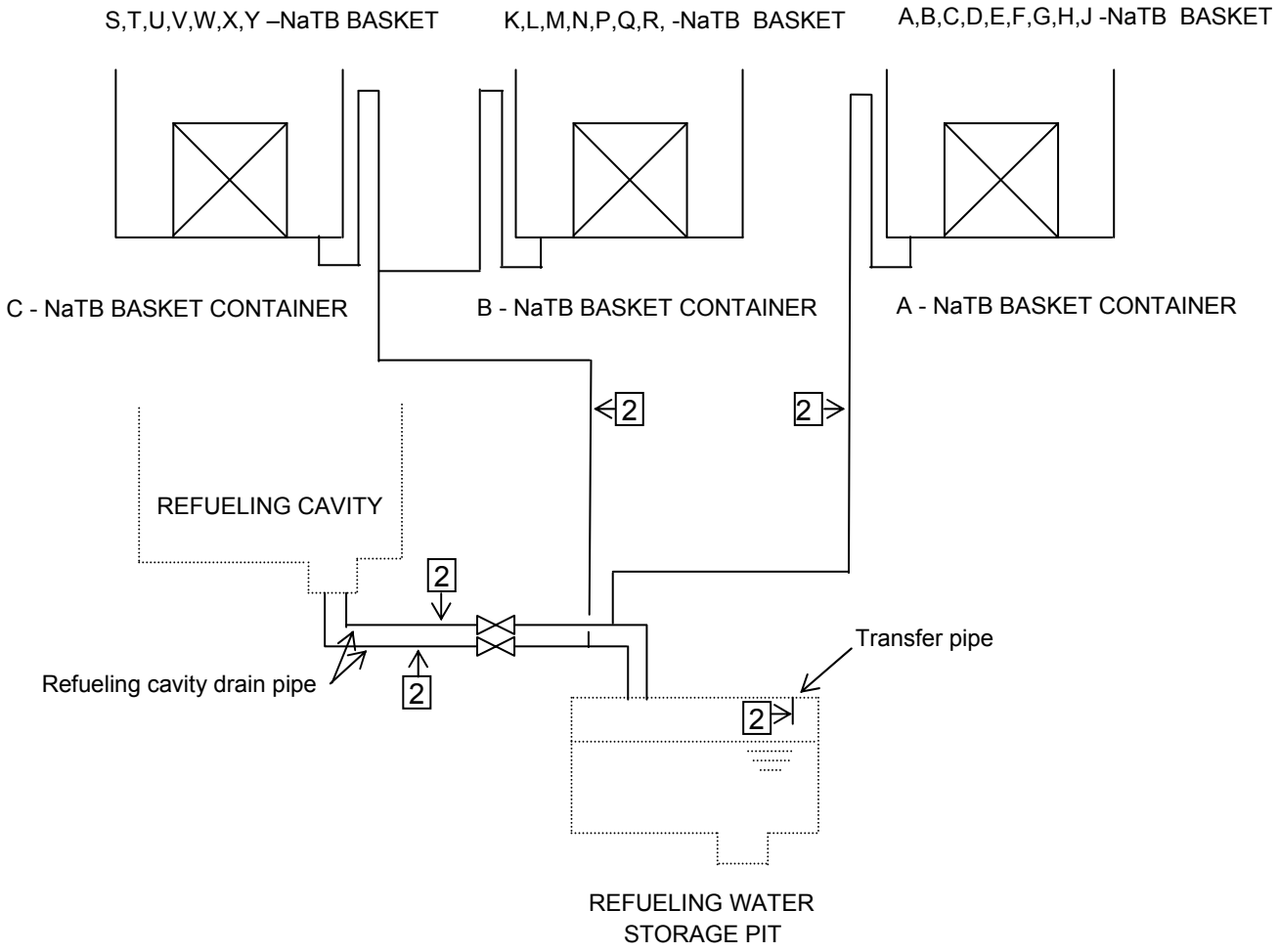

Figure 2.4.4-1 Emergency Core Cooling System (Sheet 4 of 4)

2.4.5 Residual Heat Removal System (RHRS)

2.4.5.1 Design Description

The RHRS cools the reactor by removing decay heat and other residual heat from the reactor core and the reactor coolant system (RCS) during normal plant shutdown and cooldown conditions via the component cooling water system (CCWS). Any two of the four subsystems have a 100% capability for safe shutdown. The RHRS provides cooling for the in-containment RWSP during normal plant operation when required and can also provide a portion of the RCS flow to the chemical and volume control system (CVCS) during normal plant startup and cooldown operations to control RCS pressure. The RHRS can operate during mid-loop or drain down operation to allow maintenance or inspection of the reactor head, steam generator, and reactor coolant pump seals and can transfer borated water from the RWSP to the refueling cavity at the beginning of a refueling operation.

The RHRS is a safety-related system. Portions of the RHRS (i.e., heat exchangers and pumps) are shared with the containment spray system (CSS). The RHRS provides the containment isolation function, as described in Section 2.11.2, for the piping that penetrates the containment. The RHRS is used as an alternate for core cooling / injection in case all safety injection systems fail.

1.a The functional arrangement of RHRS is as described in the Design Description of Subsection 2.4.5.1 and in Table 2.4.5-1 and as shown in Figure 2.4.5-1.

1.b Each mechanical division of the RHRS (Divisions A, B, C & D) is physically separated from the other divisions with the exception of inside the containment so as not to preclude accomplishment of the safety function.

2.a.i The ASME Code Section III components of the RHRS, identified in Table 2.4.5-2, are fabricated, installed and inspected in accordance with ASME Code Section III requirements.

2.a.ii The ASME Code Section III components of the RHRS identified in Table 2.4.5-2 are reconciled with the design requirements.

2.b.i The ASME Code Section III piping of the RHRS, including supports, identified in Table 2.4.5-3, is fabricated, installed, and inspected in accordance with ASME Code Section III requirements.

2.b.ii The ASME Code Section III piping of the RHRS, including supports, identified in Table 2.4.5-3 is reconciled with the design requirements.

3.a Pressure boundary welds in ASME Code Section III components, identified in Table 2.4.5-2, meet ASME Code Section III requirements for non-destructive examination of welds.

3.b Pressure boundary welds in ASME Code Section III piping, identified in Table 2.4.5-3, meet ASME Code Section III requirements for non-destructive examination of welds.

4.a The ASME Code Section III components, identified in Table 2.4.5-2, retain their pressure boundary integrity at their design pressure.

4.b The ASME Code Section III piping, identified in Table 2.4.5-3, retains its pressure boundary integrity at its design pressure.

5.a The seismic Category I equipment, identified in Table 2.4.5-2, can withstand seismic design basis loads without loss of safety function.

5.b The seismic Category I piping, including supports, identified in Table 2.4.5-3 can withstand seismic design basis loads without a loss of its safety function.

6.a The Class 1E equipment identified in Table 2.4.5-2 as being qualified for a harsh environment can withstand the environmental conditions that would exist before, during, and following a design basis accident without loss of safety function for the time required to perform the safety function.

6.b Class 1E equipment, identified in Table 2.4.5-2, is powered from its respective Class 1E division.

6.c Separation is provided between redundant divisions of RHRS Class 1E cables, and between Class 1E cables and non-Class 1E cables.

7.a The RHRS is provided with isolation valves in each pump suction piping that are prevented from being opened to the RCS above the pressure setpoint.

7.b Deleted

8.a The RHRS cools the reactor by removing decay heat, and other residual heat from the reactor core and the RCS during the normal plant shutdown and cool down conditions.

8.b Deleted

8.c Deleted

8.d The RHRS provides cooling for the in-containment RWSP during normal plant operations.

8.e The RHRS provides low temperature overpressure protection (LTOP) for the RCS during shutdown operation.

8.f The CS/RHR pumps have sufficient net positive suction head (NPSH).

9. Controls are provided in the MCR to open and close the remotely operated valves identified in Table 2.4.5-2.

10.a The motor-operated and check valves identified in Table 2.4.5-2 as having an active safety function perform an active safety function to change position as indicated in the table.

10.b After loss of motive power, the remotely operated valves, identified in Table 2.4.5-2, assume the indicated loss of motive power position.

11. Controls are provided in the MCR to start and stop the CS/RHR pumps identified in Table 2.4.5-4.

12. Alarms and displays identified in Table 2.4.5-4 are provided in the MCR.

13. Alarms, displays and controls identified in Table 2.4.5-4 are provided in the RSC.

14. The piping identified in Table 2.4.5-3 as designed for LBB meets the LBB criteria, or an evaluation is performed of the protection from the dynamic effects of a rupture of the line.

15.a Deleted

15.b Deleted

2.4.5.2 Inspections, Tests, Analyses, and Acceptance Criteria

Table 2.4.5-5 describes the ITAAC for the RHRS. The ITAAC associated with those components shared with the CSS performing their containment spray functions are provided in Subsection 2.11.3.

The ITAAC associated with the RHRS equipment, components, and piping that comprise a portion of the CIS are described in Table 2.11.2-2.

Table 2.4.5-1 Residual Heat Removal System Location of Equipment and Piping

Equipment and Piping Name	Location
CS/RHR pumps	Reactor Building
CS/RHR heat exchangers	Reactor Building
RHRS suction piping and valves on the RCS side between the hot legs, up to and including the second motor operated valves	Containment
RHRS discharge piping and valves on the RCS side between the cold legs, up to and including the second check valves	Containment
RHRS piping and valves on the RHR side from and excluding the second motor operated valves to and excluding the second check valves	Containment and Reactor Building
All RHRS piping and valves not mentioned above up to and including the valves interfacing with systems of a lower classification.	Containment and Reactor Building

Table 2.4.5-2 Residual Heat Removal System Equipment Characteristics (Sheet 1 of 2)

Equipment Name	Tag No.	ASME Code Section III Class	Seismic Category I	Remotely Operated Valve	Class 1E/ Qual. For Harsh Envir.	PSMS Control	Active Safety Function	Loss of Motive Power Position
CS/RHR Pumps	RHS-MPP-001 A, B, C, D	2	Yes	-	Yes/-	Containment Spray Actuation	Start	-
CS/RHR Heat Exchangers - tube side	RHS-MHX-001 A, B, C, D	2	Yes	-	-/-	-	-	-
CS/RHR Heat Exchangers - CCW side		3	Yes	-	-/-	-	-	-
1st CS/RHR Pump Hot Leg Isolation Valves	RHS-MOV-001A, B, C, D	1	Yes	Yes	Yes/Yes	Remote Manual	Transfer Closed/ Transfer Open	As Is
2nd CS/RHR Pump Hot Leg Isolation Valves	RHS-MOV-002A, B, C, D	1	Yes	Yes	Yes/Yes	Remote Manual	Transfer Closed/ Transfer Open	As Is
CS/RHR Pump Suction Relief Valves	RHS-SRV-003A, B, C, D	2	Yes	No	-/-	-	-	-
CS/RHR Pump Suction Check Valves	RHS-VLV-004A, B, C, D	2	Yes	No	-/-	-	Transfer Open	-
RHR Discharge Line Containment Isolation Valves outside containment	RHS-MOV-021A, B, C, D	2	Yes	Yes	Yes/No	Remote Manual	Transfer Closed/ Transfer Open	As Is
RHR Discharge Line Containment Isolation Valves inside containment	RHS-VLV-022A, B, C, D	2	Yes	No	-/-	-	Transfer Open/ Transfer Closed	-

Table 2.4.5-2 Residual Heat Removal System Equipment Characteristics(Sheet 2 of 2)

Equipment Name	Tag No.	ASME Code Section III Class	Seismic Category I	Remotely Operated Valve	Class 1E/ Qual. For Harsh Envir.	PSMS Control	Active Safety Function	Loss of Motive Power Position
CS/RHR Pump Full-Flow Test Line Stop Valves	RHS-MOV-025A, B, C, D	2	Yes	Yes	Yes/Yes	Remote Manual	Transfer Open/ Transfer Closed	As Is
RHR Flow Control Valves	RHS-MOV-026A, B, C, D	2	Yes	Yes	Yes/Yes	Remote Manual	Transfer Open/ Transfer Closed	As Is
2nd RHR Discharge Line Check Valves	RHS-VLV-027A, B, C, D	1	Yes	No	-/-	-	Transfer Open	-
1st RHR Discharge Line Check Valves	RHS-VLV-028A, B, C, D	1	Yes	No	-/-	-	Transfer Open	-
Containment Spray / Residual Heat Removal Pump Discharge Flow	RHS-FT-011, 021, 031, 041	—	Yes	—	Yes/No	-	—	—
Containment Spray / Residual Heat Removal Pump Minimum Flow	RHS-FT-014, 024, 034, 044	—	Yes	—	Yes/No	-	—	—
Containment Spray / Residual Heat Removal Pump Suction Pressure	RHS-PT-010, 020, 030, 040	—	Yes	—	Yes/No	-	—	—
Containment Spray / Residual Heat Removal Pump Discharge Pressure	RHS-PT-011, 021, 031, 041	—	Yes	—	Yes/No	-	—	—
Containment Spray / Residual Heat Removal Heat Exchanger Outlet Temperature	RHS-TE-014, 024, 034, 044	—	Yes	—	Yes/No	-	—	—

NOTE:
Dash (-) indicates not applicable

Table 2.4.5-3 Residual Heat Removal System Piping Characteristics

Pipe Line Name	ASME Code Section III Class	Leak Before Break	Seismic Category I
RHRS suction piping and valves on the RCS side between the hot legs, up to and including the motor operated valves RHS-MOV-002 A, B, C, D	1	Yes	Yes
RHRS discharge piping and valves on the RCS side between the cold legs, up to and including the check valves RHS-VLV-027 A, B, C, D	1	Yes	Yes
RHRS piping and valves on the RHR side from and excluding the motor operated valves RHS-MOV-002 A, B, C, D to and excluding the second check valves	2	No	Yes
All RHRS piping and valves not mentioned above up to and including the valves interfacing with systems of a lower classification.	2	No	Yes

Table 2.4.5-4 Residual Heat Removal System Equipment Alarms, Displays, and Control Functions

Equipment Name	MCR/RSC Alarm	MCR Display	MCR/RSC Control Function	RSC Display
CS/RHR Pumps RHS-MPP-001A, B, C, D	No	Yes	Yes	Yes
1st and 2nd CS/RHR Pump Hot Leg Isolation Valves RHS-MOV-001A, B, C, D and -002A, B, C, D	Yes	Yes	Yes	Yes
RHR Discharge Line Containment Isolation Valves RHS-MOV-021A, B, C, D	No	Yes	Yes	Yes
RHR Flow Control Valves RHS-MOV-026A, B, C, D	No	Yes	Yes	Yes
CS/RHR Pump Full-flow Test Line Stop Valves RHS-MOV-025A, B, C, D	No	Yes	Yes	Yes
CS/RHR Heat Exchanger Inlet Temperature RHS-TE-012, 022, 032, 042	No	Yes	No	Yes
CS/RHR Hx Outlet Temperature RHS-TE-014, 024, 034, 044	No	Yes	No	Yes
CS/RHR Pump Discharge Flow RHS-FT-011, 021, 031, 041	Yes	Yes	No	Yes
CS/RHR Pump Minimum Flow RHS-FT-014, 024, 034, 044	No	Yes	No	Yes
CS/RHR Pump Discharge Pressure RHS-PT-011, 021, 031, 041	Yes	Yes	No	Yes
CS/RHR Pump Suction Pressure RHS-PT-010, 020, 030, 040	No	Yes	No	Yes

Table 2.4.5-5 Residual Heat Removal System Inspections, Tests, Analyses, and Acceptance Criteria (Sheet 1 of 9)

Design Commitment		Inspections, Tests, Analyses		Acceptance Criteria	
1.a	The functional arrangement of the RHRS is as described in the Design Description of Subsection 2.4.5.1 and in Table 2.4.5-1 and as shown in Figure 2.4.5-1.	1.a	Inspection of the as-built RHRS will be performed.	1.a	The as-built RHRS conforms to the functional arrangement as described in the Design Description of Subsection 2.4.5.1 and in Table 2.4.5-1 and as shown in Figure 2.4.5-1.
1.b	Each mechanical division of the RHRS (Divisions A, B, C & D) is physically separated from the other divisions with the exception of inside the containment so as not to preclude accomplishment of the safety function.	1.b	Inspections and analysis of the as-built RHRS will be performed.	1.b	A report exists and concludes that each mechanical division of the as-built RHRS is physically separated from other mechanical divisions of the system by structural barriers with the exception of inside the containment so as to assure that the functions of the safety-related system are maintained.
2.a.i	The ASME Code Section III components of the RHRS, identified in Table 2.4.5-2, are fabricated, installed and inspected in accordance with ASME Code Section III requirements.	2.a.i	Inspection of the as-built ASME Code Section III components of the RHRS, identified in Table 2.4.5-2, will be performed.	2.a.i	The ASME Code Section III data report(s) (certified, when required by ASME Code) and inspection reports (including N-5 Data Reports where applicable) exist and conclude that the as-built ASME Code Section III components of the RHRS identified in Table 2.4.5-2 are fabricated, installed, and inspected in accordance with ASME Code Section III requirements.
2.a.ii	The ASME Code Section III components of the RHRS identified in Table 2.4.5-2 are reconciled with the design requirements.	2.a.ii	A reconciliation analysis of the components in Table 2.4.5-2 using as-designed and as-built information and ASME Code Section III design report(s) (NCA-3550) will be performed.	2.a.ii	The ASME Code Section III design report(s) (certified, when required by ASME Code) exist and conclude that design reconciliation has been completed in accordance with ASME Code, for the as-built ASME Code Section III components of the RHRS identified in Table 2.4.5-2. The report documents the results of the reconciliation analysis.

Table 2.4.5-5 Residual Heat Removal System Inspections, Tests, Analyses, and Acceptance Criteria (Sheet 2 of 9)

Design Commitment		Inspections, Tests, Analyses		Acceptance Criteria	
2.b.i	The ASME Code Section III piping of the RHRS, including supports, identified in Table 2.4.5-3, is fabricated, installed, and inspected in accordance with ASME Code Section III requirements.	2.b.i	Inspection of the as-built ASME Code Section III piping of the RHRS, including supports, identified in Table 2.4.5-3, will be performed.	2.b.i	The ASME Code Section III data report(s) (certified when required by ASME Code) and inspection reports (including N-5 Data Reports where applicable) exist and conclude that the as-built ASME Code Section III piping of the RHRS, including supports, identified in Table 2.4.5-3 is fabricated, installed, and inspected in accordance with ASME Code Section III requirements.
2.b.ii	The ASME Code Section III piping of the RHRS, including supports, identified in Table 2.4.5-3 is reconciled with the design requirements.	2.b.ii	A reconciliation analysis of the piping of the RHRS, including supports, identified in Table 2.4.5-3, using as-designed and as-built information and ASME Code Section III design report(s) (NCA-3550) will be performed.	2.b.ii	The ASME Code Section III design report(s) (certified, when required by ASME Code) exist and conclude that design reconciliation has been completed in accordance with the ASME Code, for the as-built ASME Code Section III piping of the RHRS, including supports, identified in Table 2.4.5-3. The report documents the results of the reconciliation analysis.
3.a	Pressure boundary welds in ASME Code Section III components, identified in Table 2.4.5-2, meet ASME Code Section III requirements for non-destructive examination of welds.	3.a	Inspections of the as-built pressure boundary welds in ASME Code Section III components identified in Table 2.4.5-2, will be performed in accordance with the ASME Code Section III.	3.a	The ASME Code Section III code reports exist and conclude that the ASME Code Section III requirements are met for non-destructive examination of the as-built pressure boundary welds in ASME Code Section III components identified in Table 2.4.5-2.
3.b	Pressure boundary welds in ASME Code Section III piping, identified in Table 2.4.5-3, meet ASME Code Section III requirements for non-destructive examination of welds.	3.b	Inspections of the as-built pressure boundary welds in ASME Code Section III piping identified in Table 2.4.5-3, will be performed in accordance with the ASME Code Section III.	3.b	The ASME Code Section III code reports exist and conclude that the ASME Code Section III requirements are met for non-destructive examination of the as-built pressure boundary welds in ASME Code Section III piping identified in Table 2.4.5-3.

Table 2.4.5-5 Residual Heat Removal System Inspections, Tests, Analyses, and Acceptance Criteria (Sheet 3 of 9)

Design Commitment		Inspections, Tests, Analyses		Acceptance Criteria	
4.a	The ASME Code Section III components, identified in Table 2.4.5-2, retain their pressure boundary integrity at their design pressure.	4.a	A hydrostatic test will be performed on the as-built components, identified in Table 2.4.5-2, required by the ASME Code Section III to be hydrostatically tested.	4.a	ASME Code Data Report(s) exist and conclude that the results of the hydrostatic test of the as-built components identified in Table 2.4.5-2 as ASME Code Section III conform to the requirements of the ASME Code Section III.
4.b	The ASME Code Section III piping, identified in Table 2.4.5-3, retains its pressure boundary integrity at its design pressure.	4.b	A hydrostatic test will be performed on the as-built piping, identified in Table 2.4.5-3, required by the ASME Code Section III to be hydrostatically tested.	4.b	ASME Code Data Report(s) exist and conclude that the results of the hydrostatic test of the as-built piping identified in Table 2.4.5-3 as ASME Code Section III conform to the requirements of the ASME Code Section III.
5.a	The seismic Category I equipment, identified in Table 2.4.5-2, can withstand seismic design basis loads without loss of safety function.	5.a.i	Inspections will be performed to verify that the as-built seismic Category I equipment identified in Table 2.4.5-2 is located in a seismic Category I structure.	5.a.i	The as-built seismic Category I equipment identified in Table 2.4.5-2 is located in a seismic Category I structure.
		5.a.ii	Type tests, analyses or a combination of type tests and analyses of seismic Category I equipment identified in Table 2.4.5-2 will be performed using analytical assumptions, or will be performed under conditions, which bound the seismic design basis requirements.	5.a.ii	A report exists and concludes that the seismic Category I equipment identified in Table 2.4.5-2 can withstand seismic design basis loads without loss of safety function.
		5.a.iii	Inspections and analyses will be performed to verify that the as-built seismic Category I equipment identified in Table 2.4.5-2, including anchorages, is seismically bounded by the tested or analyzed conditions.	5.a.iii	A report exists and concludes that the as-built seismic Category I equipment identified in Table 2.4.5-2, including anchorages, is seismically bounded by the tested or analyzed conditions.

Table 2.4.5-5 Residual Heat Removal System Inspections, Tests, Analyses, and Acceptance Criteria (Sheet 4 of 9)

Design Commitment		Inspections, Tests, Analyses		Acceptance Criteria	
5.b	The seismic Category I piping, including supports, identified in Table 2.4.5-3 can withstand seismic design basis loads without a loss of its safety function.	5.b.i	Inspections will be performed to verify that the as-built seismic Category I piping, including supports, identified in Table 2.4.5-3 is supported by a seismic Category I structure(s).	5.b.i	The as-built seismic Category I piping, including supports, identified in Table 2.4.5-3 is supported by a seismic Category I structure(s).
		5.b.ii	Inspections and analyses will be performed to verify that the as-built seismic Category I piping, including supports, identified in Table 2.4.5-3 can withstand seismic design basis loads without a loss of its safety function.	5.b.ii	A report exists and concludes that the as-built seismic Category I piping, including supports, identified in Table 2.4.5-3 can withstand seismic design basis loads without a loss of its safety function.
6.a	The Class 1E equipment identified in Table 2.4.5-2 as being qualified for a harsh environment can withstand the environmental conditions that would exist before, during, and following a design basis accident without loss of safety function for the time required to perform the safety function.	6.a.i	Type tests or a combination of type tests and analyses using the design environmental conditions, or under the conditions which bound, the design environmental conditions, will be performed on Class 1E equipment identified in Table 2.4.5-2 as being qualified for a harsh environment.	6.a.i	A report exists and concludes that the Class 1E equipment identified in Table 2.4.5-2 as being qualified for a harsh environment can withstand the environmental conditions that would exist before, during, and following a design basis accident without loss of safety function for the time required to perform the safety function.
		6.a.ii	Inspection will be performed of the as-built Class 1E equipment identified in Table 2.4.5-2 as being qualified for a harsh environment and the associated wiring, cables, and terminations located in a harsh environment.	6.a.ii	The as-built Class 1E equipment and the associated wiring, cables, and terminations identified in Table 2.4.5-2 as being qualified for a harsh environment are bounded by type tests or a combination of type tests and analyses.

Table 2.4.5-5 Residual Heat Removal System Inspections, Tests, Analyses, and Acceptance Criteria (Sheet 5 of 9)

Design Commitment		Inspections, Tests, Analyses		Acceptance Criteria	
6.b	Class 1E equipment, identified in Table 2.4.5-2, is powered from its respective Class 1E division.	6.b	A test will be performed on each division of the as-built Class 1E equipment identified in Table 2.4.5-2 by providing a simulated test signal only in the Class 1E division under test.	6.b	The simulated test signal exists at the as-built Class 1E equipment identified in Table 2.4.5-2 under test.
6.c	Separation is provided between redundant divisions of RHRS Class 1E cables, and between Class 1E cables and non-Class 1E cables.	6.c	Inspections of the as-built Class 1E divisional cables will be performed.	6.c	Physical separation or electrical isolation is provided in accordance with RG 1.75, between the as-built cables of redundant Class 1E divisions and between Class 1E cables and non-Class 1E cables.
7.a	The RHRS is provided with isolation valves in each pump suction piping that are prevented from being opened to the RCS above the pressure setpoint.	7.a	Tests will be performed using a simulated test signal.	7.a	The interlocks prevent the as-built RHRS isolation valves in each pump suction piping identified in Table 2.4.5-2 from being opened to the RCS above the pressure setpoint.
7.b	Deleted.	7.b	Deleted.	7.b	Deleted.
8.a	The RHRS cools the reactor by removing decay heat, and other residual heat from the reactor core and the RCS during the normal plant shutdown and cool down conditions.	8.a.i	An analysis is performed that determines the heat removal capability of the CS/RHR heat exchangers.	8.a.i	A report exists and concludes that the product of the overall heat transfer coefficient and the effective heat transfer area, UA, of each CS/RHR heat exchanger is greater than or equal to 1.852×10^6 Btu/hr-°F.
		8.a.ii	Tests will be performed to confirm that the as-built RHRS can provide flow through the CS/RHR heat exchangers when the pump suction is aligned to the RCS hot leg and the discharge is aligned to RCS cold leg, with the RCS at atmospheric pressure.	8.a.ii	Each as-built CS/RHR pump is sized to deliver 3,000 gpm at a discharge head of 410 ft, and provides at least 2645 gpm to the RCS when the RCS is at atmospheric pressure.
8.b	Deleted	8.b	Deleted	8.b	Deleted
8.c	Deleted	8.c	Deleted	8.c	Deleted

Table 2.4.5-5 Residual Heat Removal System Inspections, Tests, Analyses, and Acceptance Criteria (Sheet 6 of 9)

Design Commitment		Inspections, Tests, Analyses		Acceptance Criteria	
8.d	The RHRS provides cooling for the in-containment RWSP during normal plant operations.	8.d	A test will be performed to confirm that the as-built RHRS can provide flow through the CS/RHR heat exchangers when the pump suction is aligned to the RWSP and the discharge is aligned to the RWSP.	8.d	Each as-built CS/RHR pump delivers at least 2645 gpm when aligned to the RWSP.
8.e	The RHRS provides low temperature overpressure protection (LTOP) for the RCS during shutdown operation.	8.e.i	Inspections will be conducted on the as-built CS/RHR pump suction relief valves to confirm that the value of the ASME Code name plate rating is greater than or equal to system relief requirements.	8.e.i	The rated capacity recorded on the valve ASME Code name plates of the as-built valve is not less than the flow required to provide low temperature overpressure protection for the as-built RCS, as determined by the LTOP system evaluation based on the pressure-temperature curves developed for the as-procured reactor vessel material.
		8.e.ii	Tests and analysis in accordance with the ASME Code Section III will be performed to confirm set pressure.	8.e.ii	A report exists and concludes that the relief valve opens at a pressure not greater than the set pressure required to provide low temperature overpressure protection for the RCS, as determined by the LTOP system evaluation based on the pressure-temperature curves developed for the as-procured reactor vessel material.

Table 2.4.5-5 Residual Heat Removal System Inspections, Tests, Analyses, and Acceptance Criteria (Sheet 7 of 9)

Design Commitment		Inspections, Tests, Analyses		Acceptance Criteria	
8.f	The CS/RHR pumps have sufficient net positive suction head (NPSH).	8.f	Tests to measure the as-built CS/RHR pump suction pressure will be performed. Inspections and analysis to determine NPSH available to each CS/RHR pump will be performed. The analysis will consider vendor test results of required NPSH and the effects of: - pressure losses for pump inlet piping and components, - suction from the RWSP water level at the minimum value.	8.f	A report exists and concludes that the as-built NPSH available to each CS/RHR pump is greater than the NPSH required.
9.	Controls are provided in the MCR to open and close the remotely operated valves identified in Table 2.4.5-2.	9.	Tests will be performed on the as-built remotely operated valves identified in Table 2.4.5-2 using controls in the as-built MCR.	9.	Controls in the as-built MCR open and close the as-built remotely operated valves identified in Table 2.4.5-2.
10.a	The motor-operated and check valves, identified in Table 2.4.5-2 as having an active safety function perform an active safety function to change position as indicated in the table.	10.a.i	Type tests or a combination of type tests and analyses of the motor-operated valves identified in Table 2.4.5-2 as having an active safety function will be performed that demonstrate the capability of the valve to operate under its design conditions.	10.a.i	A report exists and concludes that each motor-operated valve identified in Table 2.4.5-2 as having an active safety function changes position as indicated in Table 2.4.5-2 under design conditions.
		10.a.ii	Tests of the as-built motor-operated valves identified in Table 2.4.5-2 as having an active safety function will be performed under preoperational flow, differential pressure, and temperature conditions.	10.a.ii	Each as-built motor-operated valve identified in Table 2.4.5-2 as having an active safety function changes position as indicated in Table 2.4.5-2 under preoperational test conditions.

Table 2.4.5-5 Residual Heat Removal System Inspections, Tests, Analyses, and Acceptance Criteria (Sheet 8 of 9)

Design Commitment	Inspections, Tests, Analyses	Acceptance Criteria
	10.a.iii Inspections will be performed of the as-built motor-operated and air-operated valves identified in Table 2.4.5-2 as having an active safety function.	10.a.iii Each as-built motor-operated and air-operated valve identified in Table 2.4.5-2 as having an active safety function is bounded by the type tests, or a combination of type tests and analyses.
	10.a.iv Tests of the as-built check valves identified in Table 2.4.5-2 as having an active safety function will be performed under preoperational test pressure, temperature and fluid flow conditions.	10.a.iv Each as-built check valve identified in Table 2.4.5-2 as having an active safety function changes position as indicated in Table 2.4.5-2 under preoperational test conditions.
10.b After loss of motive power, the remotely operated valves, identified in Table 2.4.5-2, assume the indicated loss of motive power position.	10.b Tests of the as-built remotely operated valves identified in Table 2.4.5-2 will be performed under the conditions of loss of motive power.	10.b Upon loss of motive power, each as-built remotely operated valve identified in Table 2.4.5-2 assumes the indicated loss of motive power position.
11. Controls are provided in the MCR to start and stop the CS/RHR pumps identified in Table 2.4.5-4.	11. Tests will be performed on the as-built CS/RHR pumps identified in Table 2.4.5-4 using controls in the as-built MCR.	11. Controls in the as-built MCR start and stop the as-built CS/RHR pumps identified in Table 2.4.5-4.
12. Alarms and displays identified in Table 2.4.5-4 are provided in the MCR.	12. Inspection will be performed for retrievability of the alarms and displays identified in Table 2.4.5-4 in the as-built MCR.	12. Alarms and displays identified in Table 2.4.5-4 can be retrieved in the as-built MCR.
13. Alarms, displays and controls identified in Table 2.4.5-4 are provided in the RSC.	13.i Inspection will be performed for retreivability of the alarms and displays identified in Table 2.4.5-4 in the as-built RSC.	13.i Alarms and displays identified in Table 2.4.5-4 can be retrieved in the as-built RSC.
	13.ii Tests of the as-built RSC control functions identified in Table 2.4.5-4 will be performed.	13.ii Controls in the as-built RSC operate the as-built equipment identified in Table 2.4.5-4 with an RSC control function.

Table 2.4.5-5 Residual Heat Removal System Inspections, Tests, Analyses, and Acceptance Criteria (Sheet 9 of 9)

Design Commitment	Inspections, Tests, Analyses	Acceptance Criteria
14. The piping identified in Table 2.4.5-3 as designed for LBB meets the LBB criteria, or an evaluation is performed of the protection from the dynamic effects of a rupture of the line.	14. Inspections of the as-built piping identified in Table 2.4.5-3 will be performed based on the evaluation report for LBB or for the evaluation of the protection from dynamic effects of a pipe break, as specified in Section 2.3.	14. An LBB evaluation report exists and concludes that the LBB acceptance criteria are met by the as-built piping identified in Table 2.4.5-3 and piping materials, or a pipe break hazards analysis report exists and concludes that protection from the dynamic effects of a line break is provided.
15.a Deleted	15.a Deleted	15.a Deleted
15.b Deleted	15.b Deleted	15.b Deleted

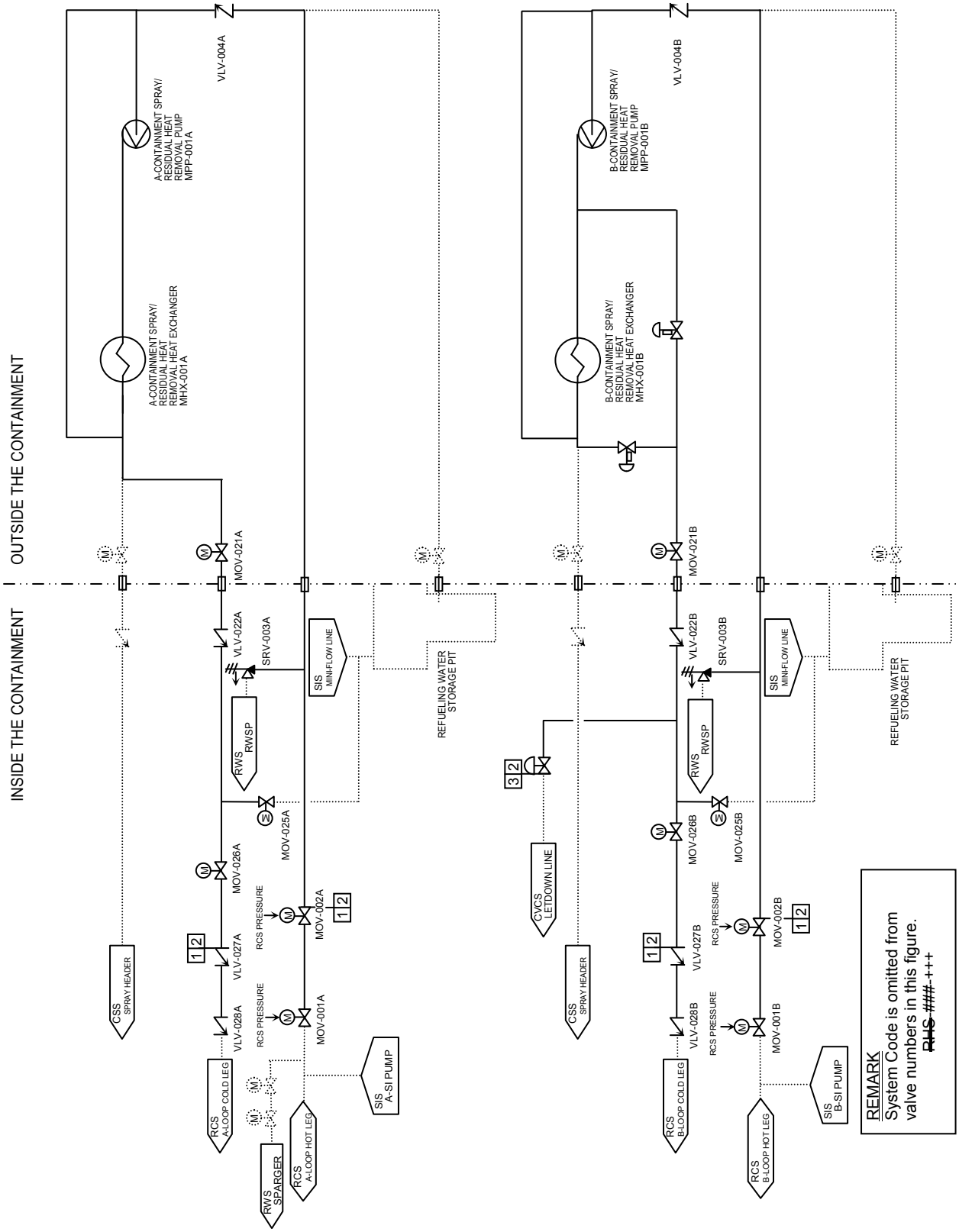

Figure 2.4.5-1 Residual Heat Removal System (Sheet 1 of 2)

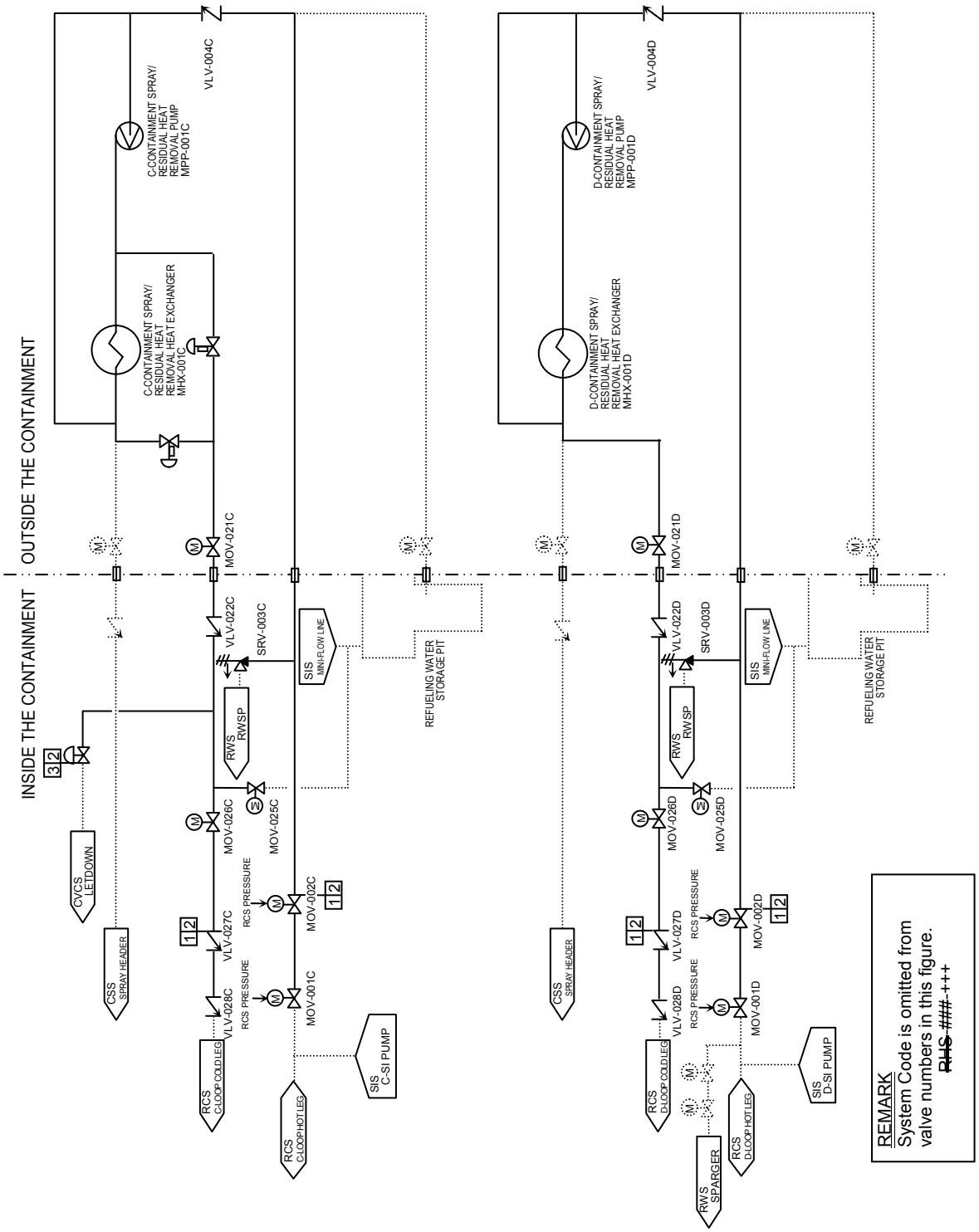

Figure 2.4.5-1 Residual Heat Removal System (Sheet 2 of 2)

2.4.6 Chemical and Volume Control System (CVCS)

2.4.6.1 Design Description

The purpose of the CVCS is to maintain the coolant inventory of the RCS and to provide chemical and radioactive cleanup of the RCS. Some components of the CVCS, such as the containment isolation valves, are safety-related, while other CVCS components, such as volume control tank, boric acid blender and seal water heat exchanger, are non safety-related.

CVCS safety functions include:

- Maintaining the reactor coolant pressure boundary
- Providing the containment isolation function, as described in Section 2.11.2, of CVCS lines penetrating the containment
- Providing isolation of a source of water connected to the RCS to prevent inadvertent dilution of boron in the coolant
- Providing isolation of the charging line

1. The functional arrangement of the CVCS is as described in the Design Description of Subsection 2.4.6.1 and in Table 2.4.6-1 and as shown in Figure 2.4.6-1.

2.a.i The ASME Code Section III components of the CVCS, identified in Table 2.4.6-2, are fabricated, installed and inspected in accordance with ASME Code Section III requirements.

2.a.ii The ASME Code Section III components of the CVCS identified in Table 2.4.6-2 are reconciled with the design requirements.

2.b.i The ASME Code Section III piping of the CVCS, including supports, identified in Table 2.4.6-3 is fabricated, installed, and inspected in accordance with ASME Code Section III requirements.

2.b.ii The ASME Code Section III piping of the CVCS, including supports, identified in Table 2.4.6-3 is reconciled with the design requirements.

3.a Pressure boundary welds in ASME Code Section III components, identified in Table 2.4.6-2, meet ASME Code Section III requirements for non-destructive examination of welds.

3.b Pressure boundary welds in ASME Code Section III piping, identified in Table 2.4.6-3, meet ASME Code Section III requirements for non-destructive examination of welds.

4.a The ASME Code Section III components, identified in Table 2.4.6-2, retain their pressure boundary integrity at their design pressure.

4.b The ASME Code Section III piping, identified in Table 2.4.6-3, retains its pressure boundary integrity at its design pressure.

5.a The seismic Category I equipment identified in Table 2.4.6-2 can withstand seismic design basis loads without loss of safety function.

5.b The seismic Category I piping, including supports, identified in Table 2.4.6-3 can withstand seismic design basis loads without a loss of its safety function.

6.a The Class 1E equipment identified in Table 2.4.6-2 as being qualified for a harsh environment can withstand the environmental conditions that would exist before, during, and following a design basis accident without loss of safety function for the time required to perform the safety function.

6.b Class 1E equipment identified in Table 2.4.6-2 is powered from its respective Class 1E division.

6.c Separation is provided between redundant divisions of CVCS Class 1E cables, and between Class 1E cables and non-Class 1E cables.

7. Deleted.

8.a The CVCS provides makeup capability to maintain the RCS volume.

8.b Deleted.

8.c The CVCS supplies seal water to the RCP seals.

9. Controls are provided in the MCR to open and close the remotely operated valves identified in Table 2.4.6-2.

10.a The motor-operated valves, air-operated valves and check valves identified in Table 2.4.6-2 as having an active safety function perform an active safety function to change position as indicated in the table.

10.b After loss of motive power, the remotely operated valves, identified in Table 2.4.6-2, assume the indicated loss of motive power position.

11. Controls are provided in the MCR to start and stop the charging pumps identified in Table 2.4.6-4.

12. Alarms and displays identified in Table 2.4.6-4 are provided in the MCR.

13. Alarms, displays and controls identified in Table 2.4.6-4 are provided in the RSC.

14.a Deleted.

14.b Deleted.

2.4.6.2 Inspections, Tests, Analyses, and Acceptance Criteria

Table 2.4.6-5 describes the ITAAC for the CVCS.

The ITAAC associated with the CVCS equipment, components, and piping that comprise a portion of the CIS are described in Table 2.11.2-2.

Table 2.4.6-1 Chemical and Volume Control System Location of Equipment and Piping (Sheet 1 of 2)

System and Components	Location
Regenerative heat exchanger	Containment
Letdown heat exchanger	Containment
Excess letdown heat exchanger	Containment
Seal Water Heat Exchanger	Reactor Building
Volume control tank	Reactor Building
Charging pumps	Reactor Building
Letdown line and valves from RCS to and including valve CVS-LCV-362 prior to Regenerative Heat Exchanger.	Containment
Letdown line piping and valves from and excluding the valve CVS-LCV-362 prior to Regenerative Heat Exchanger to the following valves: RHRS valves (2 each) (excluding the valves) RHS-AOV-024 B, C; Containment isolation valve (excluding the valve) CVS-AOV-005	Containment
All CVCS containment isolation valves and piping between the valves.	Containment and Reactor Building
Excess letdown piping and valves from RCS to and excluding containment isolation valves CVS-MOV-203 and CVS-VLV-202. This includes piping related to seal water return line from and excluding 4 valves CVS-AOV-192 A, B, C, D and to seal water return line relief valve CVS-SRV-201 (including the valve).	Containment
RCP seal water return piping and valves from RCP seal to and including 4 valves CVS-AOV-192 A, B, C, D	Containment
RCP seal water injection piping and valves excluding following valves and piping: containment isolation valves, piping between these valves; piping downstream of CVS-VLV-180 A, B, C, D (including valves); seal injection filter line from CVS-VLV-168 to CVS-VLV-173 (excluding valves)	Reactor Building and Containment
RCP seal water injection piping and valves downstream of including valves CVS-VLV-180 A, B, C, D	Containment
Charging lines from and including valves CVS-VLV-158 and CVS-AOV-159 to their penetration into the RCS	Containment
Auxiliary Spray line from and including valves CVS-AOV-155 to the penetration into the RCS	Containment
Charging line and Auxiliary Spray line piping and valves between the following valves (excluding the valves) downstream of the Regenerative Heat Exchanger: CVS-VLV-158, CVS-AOV-159, CVS-AOV-155 and the containment isolation valve CVS-VLV-153	Containment

Table 2.4.6-1 Chemical and Volume Control System Location of Equipment and Piping (Sheet 2 of 2)

System and Components	Location
Charging line piping and valves from and including the volume control outlet valve CVS-LCV-031B to charging pump minimum flow orifices and following valves: CVS-VLV-213 (including valve); CVS-VLV-585 (including valve); CVS-VLV-557 (including valve) ; CVS-VLV-163 and 164 (excluding valves); CVS-VLV-591 and 593 (including valve); and CVS-MOV-152 (excluding valve)	Reactor Building
CVCS piping and valves related to the primary makeup water supply isolation from and including the isolation valve CVS-FCV-128 to primary makeup flow control valve CVS-FCV-133A (including valve).	Reactor Building
CVCS Charging Line Isolation (CVS-MOV-151)	Reactor Building
CVCS Charging Line Containment Isolation (CVS-MOV-152)	Reactor Building
RCP Seal Water Return Line Containment Isolation (CVS-MOV-203, 204)	Containment/ Reactor Building
RCP Seal Water Injection Line Containment Isolation (CVS-MOV-178 A, B, C, D)	Reactor Building
RCP Seal Water Injection Line Containment Isolation Check (CVS-VLV-179 A, B, C, D)	Containment
Letdown Orifice Stop (CVS-AOV-001 A, B, C)	Containment
Auxiliary Pressurizer Spray Line Isolation (CVS-AOV-155)	Containment
CVCS Charging Line Isolation (CVS-AOV-159)	Containment
CVCS Letdown Line Isolation (CVS-LCV-361, 362)	Containment
Air Operated Valve (CVS-AOV-192 A, B, C, D)	Containment
Excess Letdown Isolation CVS-AOV-221, 222	Containment
Auxiliary Pressurizer Spray Line Check (CVS-VLV-156)	Containment
Letdown Containment Isolation (CVS-AOV-005, 006)	Containment/ Reactor Building
Volume Control Tank Outlet Valve (CVS-LCV-031B, C)	Reactor Building
Charging Pump Alternate Makeup Line Stop (CVS-LCV-031 D, E, F, G)	Reactor Building
Primary Makeup Water Supply Isolation (CVS-FCV-128, 129)	Reactor Building

Table 2.4.6-2 Chemical and Volume Control System Equipment Characteristics (Sheet 1 of 6)

Equipment Name	Tag No.	ASME Code Section III Class	Seismic Category I	Remotely Operated Valve	Class 1E/ Qual. For Harsh Envir.	PSMS Control	Active Safety Function	Loss of Motive Power Position
Charging pumps	CVS-MPP-001 A, B	3	Yes	—	Yes / No	Undervoltage Signal	Start	—
Regenerative heat exchanger	CVS-MHX-001	3	Yes	—	— / —	—	—	—
Letdown heat exchanger – Tube Side	CVS-MHX-002	3	Yes	—	— / —	—	—	—
Letdown heat exchanger – CCW Side		2	Yes	—	— / —	—	—	—
Excess letdown heat exchanger – Tube Side	CVS-MHX-003	3	Yes	—	— / —	—	—	—
Excess letdown heat exchanger – CCW side		2	Yes	—	— / —	—	—	—
Letdown Orifice Stop Valve	CVS-AOV-001 A, B, C	3	Yes	Yes	Yes/Yes	Containment Isolation Phase A	Transfer Closed	Closed
Letdown Containment Isolation Valve (First)	CVS-AOV-005	2	Yes	Yes	Yes/Yes	Containment Isolation Phase A	Transfer Closed	Closed
Letdown Containment Isolation Valve (Second)	CVS-AOV-006	2	Yes	Yes	Yes/No	Containment Isolation Phase A	Transfer Closed	Closed

Table 2.4.6-2 Chemical and Volume Control System Equipment Characteristics (Sheet 2 of 6)

Equipment Name	Tag No.	ASME Code Section III Class	Seismic Category I	Remotely Operated Valve	Class 1E/ Qual. For Harsh Envir.	PSMS Control	Active Safety Function	Loss of Motive Power Position
Volume Control Tank Outlet Valve	CVS-LCV-031 B, C	3	Yes	Yes	Yes/No	—	—	As Is
Charging Pump Alternate Makeup Valve	CVS-LCV-031 D, E,F,G	3	Yes	Yes	Yes/No	—	—	As Is
Volume control tank outlet check Valve	CVS-VLV-125	3	Yes	No	— / —	—	—	—
Charging pump minimum flow check Valve	CVS-VLV-129A, B	3	Yes	No	— / —	—	Transfer Closed/ Open	—
Charging pump discharge check Valve	CVS-VLV-131A, B	3	Yes	No	— / —	—	Transfer Closed/ Open	—
CVCS Charging Line Isolation Valve	CVS-MOV-151	3	Yes	Yes	Yes/No	ECCS Actuation and CVCS isolation	Transfer Closed	As Is
CVCS Charging Line Containment Isolation Valve	CVS-MOV-152	2	Yes	Yes	Yes/No	ECCS Actuation and CVCS isolation	Transfer Closed	As Is

Table 2.4.6-2 Chemical and Volume Control System Equipment Characteristics (Sheet 3 of 6)

Equipment Name	Tag No.	ASME Code Section III Class	Seismic Category I	Remotely Operated Valve	Class 1E/ Qual. For Harsh Envir.	PSMS Control	Active Safety Function	Loss of Motive Power Position
CVCS Charging Line Isolation Check Valve	CVS-VLV-153	2	Yes	No	— / —	—	Transfer Closed	—
Auxiliary Pressurizer Spray Line Isolation Valve	CVS-AOV-155	1	Yes	Yes	Yes/Yes	Remote Manual	Transfer Closed	Closed
Auxiliary Pressurizer Spray Line Check Valve	CVS-VLV-156	1	Yes	No	— / —	—	Transfer Closed	—
Charging Line Check Valve	CVS-VLV-158	1	Yes	No	— / —	—	—	—
CVCS Charging Line Isolation Valve	CVS-AOV-159	1	Yes	Yes	Yes/Yes	Remote Manual	Transfer Closed/ Open	Open
CVCS Charging Line Check Valve	CVS-VLV-160, 161	1	Yes	No	— / —	—	Transfer Closed	—
RCP Seal Injection Line Containment Isolation	CVS-MOV-178 A, B, C, D	2	Yes	Yes	Yes/No	Remote Manual	Transfer Closed	As Is
RCP Seal Injection Line Containment Isolation Check Valve	CVS-VLV-179 A, B, C, D	2	Yes	No	— / —	—	Transfer Closed/ Open	—
RCP Seal Water Injection Valve	CVS-VLV-180 A, B, C, D	1	Yes	No	— / —	—	—	—

Table 2.4.6-2 Chemical and Volume Control System Equipment Characteristics (Sheet 4 of 6)

Equipment Name	Tag No.	ASME Code Section III Class	Seismic Category I	Remotely Operated Valve	Class 1E/ Qual. For Harsh Envir.	PSMS Control	Active Safety Function	Loss of Motive Power Position
RCP Seal Injection Line Check Valve (First)	CVS-VLV-181 A, B, C, D	1	Yes	No	— / —	—	Transfer Closed/ Open	—
RCP Seal Injection Line Check Valve (Second)	CVS-VLV-182 A, B, C, D	1	Yes	No	— / —	—	Transfer Closed/ Open	—
Air Operated Valve	CVS-AOV-192 A, B, C, D	2	Yes	Yes	Yes/Yes	Undervoltage Signal	Transfer Closed	Closed
RCP Seal Return Line Containment Isolation Valve	CVS-MOV-203	2	Yes	Yes	Yes/Yes	Containment Isolation Phase A with Undervoltage Signal Containment Isolation Phase B	Transfer Closed	As Is
Air Operated Valve	CVS-AOV-196 A, B, C, D	3	Yes	Yes	Yes/Yes	Undervoltage signal	Transfer Closed	Closed
RCP Seal Return Line Containment Isolation Check valve	CVS-VLV-202	2	Yes	No	— / —	—	Transfer Closed	—

Table 2.4.6-2 Chemical and Volume Control System Equipment Characteristics (Sheet 5 of 6)

Equipment Name	Tag No.	ASME Code Section III Class	Seismic Category I	Remotely Operated Valve	Class 1E/ Qual. For Harsh Envir.	PSMS Control	Active Safety Function	Loss of Motive Power Position
RCP Seal Return Line Containment Isolation Valve	CVS-MOV-204	2	Yes	Yes	Yes/No	Containment Isolation Phase A with Undervoltage Signal Containment Isolation Phase B	Transfer Closed	As Is
Primary Makeup Water Supply Isolation	CVS-FCV-128, 129	3	Yes	Yes	Yes/No	Reactor Makeup Water Line Isolation	Transfer Closed	As Is
Excess Letdown Isolation Valve	CVS-AOV-221, 222	1	Yes	Yes	Yes/Yes	Letdown Isolation	Transfer Closed	Closed
CVCS Letdown Line Isolation Valve	CVS-LCV-361	1	Yes	Yes	Yes/Yes	Letdown Isolation	Transfer Closed	Closed
CVCS Letdown Line Isolation Valve	CVS-LCV-362	1	Yes	Yes	Yes/Yes	Letdown Isolation	Transfer Closed	Closed
Charging pump alternate makeup line check	CVS-VLV-592	3	Yes	No	— / —	—	Transfer Open	—

Table 2.4.6-2 Chemical and Volume Control System Equipment Characteristics (Sheet 6 of 6)

Equipment Name	Tag No.	ASME Code Section III Class	Seismic Category I	Remotely Operated Valve	Class 1E/ Qual. For Harsh Envir.	PSMS Control	Active Safety Function	Loss of Motive Power Position
Charging pump alternate makeup line check	CVS-VLV-594	3	Yes	No	— / —	—	Transfer Open	—
Charging pump alternate makeup line check	CVS-VLV-595	3	Yes	No	— / —	—	Transfer Open	—
Primary Makeup Water Supply Flow	CVS-FT-128, 129	—	Yes	—	Yes/No	—	—	—

NOTE:
Dash (—) indicates not applicable

Table 2.4.6-3 Chemical and Volume Control System Piping Characteristics (Sheet 1 of 2)

Pipe Line Name	ASME Code Section III Class	Seismic Category I
Letdown line and valves from RCS to and including valve CVS-LCV-362 prior to Regenerative Heat Exchanger.	1	Yes
Letdown line piping and valves from and excluding the valve CVS-LCV-362 prior to Regenerative Heat Exchanger to the following valves: RHRS valves (2 each) (excluding the valves) RHS-AOV-024 B, C; Containment isolation valve (excluding the valve) CVS-AOV-005.	3	Yes
All CVCS containment isolation valves and piping between the valves.	2	Yes
Excess letdown piping and valves from RCS to and including valve CVS-AOV-222 just prior to excess letdown heat exchanger.	1	Yes
Excess letdown piping and valves from but excluding valve CVS-AOV-222 just prior to excess letdown heat exchanger to and excluding containment isolation valves CVS-MOV-203 and CVS-VLV-202. This includes piping related to seal water return from RCP seals to but excluding 4 valves CVS-AOV-192 A, B, C, D.	3	Yes
RCP seal water return piping and valves from RCP seal to and including valves CVS-AOV-192 A, B, C, D	2	Yes
RCP seal water injection piping and valves excluding following valves and piping: containment isolation valves, piping between these valves; piping downstream of CVS-VLV-180 A, B, C, D (including valves); seal injection filter line from CVS-VLV-168 to CVS-VLV-173 (excluding valves)	3	Yes
RCP seal water injection piping and valves downstream of including valves CVS-VLV-180 A, B, C, D	1	Yes
Charging lines from and including valves CVS-VLV-158 and CVS-AOV-159 to their penetration into the RCS	1	Yes
Charging line piping and valves between the following valves (excluding the valves) downstream of the Regenerative Heat Exchanger: CVS-VLV-158 and CVS-AOV-159. And, containment isolation valve CVS-VLV-153 (excluding the valve)	3	Yes
Auxiliary Spray line from and including valves CVS-AOV-155 to the penetration into the RCS	1	Yes
Auxiliary Spray piping up to but excluding CVS-AOV-155	3	Yes

Table 2.4.6-3 Chemical and Volume Control System Piping Characteristics (Sheet 2 of 2)

Pipe Line Name	ASME Code Section III Class	Seismic Category I
Charging line piping and valves from and including the volume control outlet valve CVS-LCV-031B to charging pump minimum flow orifices and the following valves: CVS-VLV-213 (including valve); CVS-VLV-585 (including valve); CVS-VLV-557 (including valve); CVS-VLV-163 and 164 (excluding valves); CVS- VLV-591 and 593 (including valves); and CVS-MOV-152 (excluding valve)	3	Yes
CVCS piping and valves related to the primary makeup water supply isolation from and including the isolation valve CVS-FCV-128 to primary makeup flow control valve CVS-FCV-133A (including valve).	3	Yes

Table 2.4.6-4 Chemical and Volume Control System Equipment, Alarms, Displays, and Control Functions (Sheet 1 of 2)

Equipment Name	MCR/RSC Alarm	MCR Display	MCR/RSC Control Function	RSC Display
Charging Pump (Run Status)	No	Yes	Yes	Yes
Primary Makeup Water Supply Flow	Yes	Yes	No	Yes
Letdown Containment Isolation Valves (CVS-AOV-005,006)	No	Yes	Yes	Yes
CVCS Charging Line Containment Isolation Valve (CVS-MOV-152)	No	Yes	Yes	Yes
RCP Seal Injection Line Containment Isolation (CVS-MOV-178 A, B, C, D)	No	Yes	Yes	Yes
RCP Seal Return Line Containment Isolation Valves (CVS-MOV-203,204)	No	Yes	Yes	Yes
Volume Control Tank Outlet Valves (CVS-LCV-031 B, C)	No	Yes	Yes	Yes
Charging Pump Alternate Makeup Valves (CVS-LCV-031 D,E,F,G)	No	Yes	Yes	Yes
CVCS Charging Line Isolation Valve (CVS-MOV-151)	No	Yes	Yes	Yes
Auxiliary Pressurizer Spray Line Isolation Valve (CVS-AOV-155)	No	Yes	Yes	Yes
CVCS Charging Line Isolation Valve (CVS-AOV-159)	No	Yes	Yes	Yes
Air Operated Valves (CVS-AOV-192 A, B, C, D)	No	Yes	Yes	Yes
Air Operated Valves (CVS-AOV-196 A, B, C, D)	No	Yes	Yes	Yes
Primary Makeup Water Supply Isolation (CVS-FCV-128, 129)	No	Yes	Yes	Yes

Table 2.4.6-4 Chemical and Volume Control System Equipment, Alarms, Displays, and Control Functions (Sheet 2 of 2)

Equipment Name	MCR/RSC Alarm	MCR Display	MCR/RSC Control Function	RSC Display
Excess Letdown Isolation Valve (CVS-AOV-221, 222)	No	Yes	Yes	Yes
CVCS Letdown Line Isolation Valve (CVS-LCV-361)	No	Yes	Yes	Yes
CVCS Letdown Line Isolation Valve (CVS-LCV-362)	No	Yes	Yes	Yes

Table 2.4.6-5 Chemical and Volume Control System Inspections, Tests, Analyses, and Acceptance Criteria (Sheet 1 of 7)

Design Commitment	Inspections, Tests, Analyses	Acceptance Criteria
1. The functional arrangement of the CVCS is as described in the Design Description of Subsection 2.4.6.1 and in Table 2.4.6-1 and as shown in Figure 2.4.6-1.	1. Inspection of the as-built CVCS will be performed.	1. The as-built CVCS conforms to the functional arrangement as described in the Design Description of Subsection 2.4.6.1 and in Table 2.4.6-1 and as shown in Figure 2.4.6-1.
2.a.i The ASME Code Section III components of the CVCS, identified in Table 2.4.6-2, are fabricated, installed and inspected in accordance with ASME Code Section III requirements.	2.a.i Inspection of the as-built ASME Code Section III components of the CVCS, identified in Table 2.4.6-2, will be performed.	2.a.i The ASME Code Section III data report(s) (certified, when required by ASME Code) and inspection reports (including N-5 Data Reports where applicable) exist and conclude that the as-built ASME Code Section III components of the CVCS identified in Table 2.4.6-2 are fabricated, installed, and inspected in accordance with ASME Code Section III requirements.
2.a.ii The ASME Code Section III components of the CVCS identified in Table 2.4.6-2 are reconciled with the design requirements.	2.a.ii A reconciliation analysis of the components identified in Table 2.4.6-2 using as-designed and as-built information and ASME Code Section III design report(s) (NCA-3550) will be performed.	2.a.ii The ASME Code Section III design report(s) (certified, when required by ASME Code) exist and conclude that design reconciliation has been completed in accordance with the ASME Code, for the as-built ASME Code Section III components of the CVCS identified in Table 2.4.6-2. The report documents the results of the reconciliation analysis.
2.b.i The ASME Code Section III piping of the CVCS, including supports, identified in Table 2.4.6-3, is fabricated, installed, and inspected in accordance with ASME Code Section III requirements.	2.b.i Inspection of the as-built ASME Code Section III piping of the CVCS, including supports, identified in Table 2.4.6-3, will be performed.	2.b.i The ASME Code Section III data report(s) (certified when required by ASME Code) and inspection reports (including N-5 Data Reports where applicable) exist and conclude that the as-built ASME Code Section III piping of the CVCS, including supports, identified in Table 2.4.6-3 is fabricated, installed, and inspected in accordance with ASME Code Section III requirements.

Table 2.4.6-5 Chemical and Volume Control System Inspections, Tests, Analyses, and Acceptance Criteria (Sheet 2 of 7)

Design Commitment	Inspections, Tests, Analyses	Acceptance Criteria
2.b.ii The ASME Code Section III piping of the CVCS, including supports, identified in Table 2.4.6-3 is reconciled with the design requirements.	2.b.ii A reconciliation analysis of the piping of the CVCS, including supports, identified in Table 2.4.6-3, using as-designed and as-built information and ASME Code Section III design report(s) (NCA-3550) will be performed.	2.b.ii The ASME Code Section III design report(s) (certified, when required by ASME Code) exist and conclude that design reconciliation has been completed in accordance with the ASME Code, for the as-built ASME Code Section III piping of the CVCS, including supports, identified in Table 2.4.6-3. The report documents the results of the reconciliation analysis.
3.a Pressure boundary welds in ASME Code Section III components, identified in Table 2.4.6-2, meet ASME Code Section III requirements for non-destructive examination of welds.	3.a Inspections of the as-built pressure boundary welds in ASME Code Section III components identified in Table 2.4.6-2, will be performed in accordance with the ASME Code Section III.	3.a The ASME Code Section III code reports exist and conclude that the ASME Code Section III requirements are met for non-destructive examination of the as-built pressure boundary welds in ASME Code Section III components identified in Table 2.4.6-2.
3.b Pressure boundary welds in ASME Code Section III piping, identified in Table 2.4.6-3, meet ASME Code Section III requirements for non-destructive examination of welds.	3.b Inspections of the as-built pressure boundary welds in ASME Code Section III piping identified in Table 2.4.6-3 will be performed in accordance with the ASME Code Section III.	3.b The ASME Code Section III code reports exist and conclude that the ASME Code Section III requirements are met for non-destructive examination of the as-built pressure boundary welds in ASME Code Section III piping identified in Table 2.4.6-3.
4.a The ASME Code Section III components, identified in Table 2.4.6-2, retain their pressure boundary integrity at their design pressure.	4.a A hydrostatic test will be performed on the as-built components, identified in Table 2.4.6-2, required by the ASME Code Section III to be hydrostatically tested.	4.a ASME Code Data Report(s) exist and conclude that the results of the hydrostatic test of the as-built components identified in Table 2.4.6-2 as ASME Code Section III conform to the requirements of the ASME Code Section III.

Table 2.4.6-5 Chemical and Volume Control System Inspections, Tests, Analyses, and Acceptance Criteria (Sheet 3 of 7)

Design Commitment	Inspections, Tests, Analyses	Acceptance Criteria
4.b The ASME Code Section III piping, identified in Table 2.4.6-3, retains its pressure boundary integrity at its design pressure.	4.b A hydrostatic test will be performed on the as-built piping, identified in Table 2.4.6-3, required by the ASME Code Section III to be hydrostatically tested.	4.b ASME Code Data Report(s) exist and conclude that the results of the hydrostatic test of the as-built piping identified in Table 2.4.6-3 as ASME Code Section III conform to the requirements of the ASME Code, Section III.
5.a The seismic Category I equipment identified in Table 2.4.6-2 can withstand seismic design basis loads without loss of safety function.	5.a.i Inspections will be performed to verify that the as-built seismic Category I equipment identified in Table 2.4.6-2 is located in a seismic Category I structure.	5.a.i The as-built seismic Category I equipment identified in Table 2.4.6-2 is located in a seismic Category I structure.
	5.a.ii Type tests, analyses, or a combination of type tests and analyses of seismic Category I equipment identified in Table 2.4.6-2 will be performed using analytical assumptions, or will be performed under conditions, which bound the seismic design basis requirements.	5.a.ii A report exists and concludes that the seismic Category I equipment identified in Table 2.4.6-2 can withstand seismic design basis loads without loss of safety function.
	5.a.iii Inspections and analyses will be performed to verify that the as-built seismic Category I equipment identified in Table 2.4.6-2, including anchorages, is seismically bounded by the tested or analyzed conditions.	5.a.iii A report exists and concludes that the as-built seismic Category I equipment identified in Table 2.4.6-2, including anchorages, is seismically bounded by the tested or analyzed conditions.
5.b The seismic Category I piping, including supports, identified in Table 2.4.6-3 can withstand seismic design basis loads without a loss of its safety function.	5.b.i Inspections will be performed to verify that the as-built seismic Category I piping, including supports, identified in Table 2.4.6-3 is supported by a seismic Category I structure(s).	5.b.i The as-built seismic Category I piping, including supports, identified in Table 2.4.6-3 is supported by a seismic Category I structure(s).

Table 2.4.6-5 Chemical and Volume Control System Inspections, Tests, Analyses, and Acceptance Criteria (Sheet 4 of 7)

Design Commitment	Inspections, Tests, Analyses	Acceptance Criteria
	5.b.ii Inspections and analyses will be performed to verify that the as-built seismic Category I piping, including supports, identified in Table 2.4.6-3 can withstand seismic design basis loads without a loss of its safety function.	5.b.ii A report exists and concludes that the as-built seismic Category I piping, including supports, identified in Table 2.4.6-3 can withstand seismic design basis loads without a loss of its safety function.
6.a The Class 1E equipment identified in Table 2.4.6-2 as being qualified for a harsh environment can withstand the environmental conditions that would exist before, during, and following a design basis accident without loss of safety function for the time required to perform the safety function.	6.a.i Type tests or a combination of type tests and analyses using the design environmental conditions, or under the conditions which bound the design environmental conditions, will be performed on Class 1E equipment identified in Table 2.4.6-2 as being qualified for a harsh environment.	6.a.i A report exists and concludes that the Class 1E equipment identified in Table 2.4.6-2 as being qualified for a harsh environment can withstand the environmental conditions that would exist before, during, and following a design basis accident without loss of safety function for the time required to perform the safety function.
	6a.ii Inspection will be performed of the as-built Class 1E equipment identified in Table 2.4.6-2 as being qualified for a harsh environment and the associated wiring, cables, and terminations located in a harsh environment.	6.a.ii The as-built Class 1E equipment and the associated wiring, cables, and terminations identified in Table 2.4.6-2 as being qualified for a harsh environment are bounded by type tests or a combination of type tests and analyses.
6.b Class 1E equipment, identified in Table 2.4.6-2, is powered from its respective Class 1E division.	6.b A test will be performed on each division of the as-built Class 1E equipment identified in Table 2.4.6-2 by providing a simulated test signal only in the Class 1E division under test.	6.b The simulated test signal exists at the as-built Class 1E equipment identified in Table 2.4.6-2 under test.
6.c Separation is provided between redundant divisions of CVCS Class 1E cables, and between Class 1E cables and non-Class 1E cables.	6.c Inspections of the as-built Class 1E divisional cables will be performed.	6.c Physical separation or electrical isolation is provided in accordance with R.G. 1.75 between the as-built cables of redundant Class 1E divisions and between Class 1E cables and non-Class 1E cables.

Table 2.4.6-5 Chemical and Volume Control System Inspections, Tests, Analyses, and Acceptance Criteria (Sheet 5 of 7)

Design Commitment	Inspections, Tests, Analyses	Acceptance Criteria
7. Deleted.	7. Deleted.	7. Deleted.
8.a The CVCS provides makeup capability to maintain the RCS volume.	8.a A test of the as-built CVCS will be performed to measure the makeup flow rate.	8.a Each as-built CVCS charging pump delivers a flow rate to the RCS of greater than or equal to 160 gpm at normal operating pressure of RCS.
8.b Deleted.	8.b Deleted.	8.b Deleted.
8.c The CVCS supplies seal water to the RCP seals.	8.c A test of the as-built CVCS will be performed by aligning a flow path to each RCP.	8.c Each as-built CVCS charging pump provides a flow rate of greater than or equal to 8 gpm to each RCP.
9. Controls are provided in the MCR to open and close the remotely operated valves identified in Table 2.4.6-2.	9. Tests will be performed on the as-built remotely operated valves identified in Table 2.4.6-2 using controls in the as-built MCR.	9. Controls in the as-built MCR open and close the as-built remotely operated valves identified in Table 2.4.6-2.
10.a. The motor-operated valves, air-operated valves and check valves identified in Table 2.4.6-2 as having an active safety function perform an active safety function to change position as indicated in the table.	10.a.i Type tests or a combination of type tests and analyses of the motor-operated valves and air-operated valves identified in Table 2.4.6-2 as having an active safety function will be performed that demonstrate the capability of the valve to operate under its design conditions.	10.a.i A report exists and concludes that each motor-operated and air-operated valve identified in Table 2.4.6-2 as having an active safety function changes position as indicated in Table 2.4.6-2 under design conditions.
	10.a.ii Tests of the as-built motor-operated valves and air-operated valves identified in Table 2.4.6-2 as having an active safety function will be performed under preoperational flow, differential pressure, and temperature conditions.	10.a.ii Each as-built motor-operated and air-operated valve identified in Table 2.4.6-2 as having an active safety function changes position as indicated in Table 2.4.6-2 under preoperational test conditions.

Table 2.4.6-5 Chemical and Volume Control System Inspections, Tests, Analyses, and Acceptance Criteria (Sheet 6 of 7)

Design Commitment	Inspections, Tests, Analyses	Acceptance Criteria
	10.a.iii Inspections will be performed of the as-built motor-operated and air-operated valves identified in Table 2.4.6-2 as having an active safety function.	10.a.iii Each as-built motor-operated and air-operated valve identified in Table 2.4.6-2 as having an active safety function is bounded by the type tests, or a combination of type tests and analyses.
	10.a.iv Tests of the as-built check valves identified in Table 2.4.6-2 as having an active safety function will be performed under preoperational test pressure, temperature, and fluid flow conditions.	10.a.iv Each as-built check valve identified in Table 2.4.6-2 as having an active safety function changes position as indicated in Table 2.4.6-2 under preoperational test conditions.
10.b After loss of motive power, the remotely operated valves, identified in Table 2.4.6-2, assume the indicated loss of motive power position.	10.b Tests of the as-built remotely operated valves identified in Table 2.4.6-2 will be performed under the conditions of loss of motive power.	10.b Upon loss of motive power, each as-built remotely operated valve identified in Table 2.4.6-2 assumes the indicated loss of motive power position.
11. Controls are provided in the MCR to start and stop the charging pumps identified in Table 2.4.6-4.	11. Tests will be performed on the as-built charging pumps identified in Table 2.4.6-4 using controls in the as-built MCR.	11. Controls in the as-built MCR start and stop the as-built charging pumps identified in Table 2.4.6-4.
12. Alarms and displays identified in Table 2.4.6-4 are provided in the MCR.	12. Inspection will be performed for retrievability of the alarms and displays identified in Table 2.4.6-4 in the as-built MCR.	12. Alarms and displays identified in Table 2.4.6-4 can be retrieved in the as-built MCR.
13. Alarms, displays and controls identified in Table 2.4.6-4 are provided in the RSC.	13.i Inspection will be performed for retrievability of the alarms and displays identified in Table 2.4.6-4 in the as-built RSC.	13.i Alarms and displays identified in Table 2.4.6-4 can be retrieved in the as-built RSC.
	13.ii Tests of the as-built RSC control functions identified in Table 2.4.6-4 will be performed.	13.ii Controls in the as-built RSC operate the as-built equipment identified in Table 2.4.6-4 with an RSC control function.

Table 2.4.6-5 Chemical and Volume Control System Inspections, Tests, Analyses, and Acceptance Criteria (Sheet 7 of 7)

Design Commitment	Inspections, Tests, Analyses	Acceptance Criteria
14.a Deleted.	14.a Deleted.	14.a Deleted.
14.b Deleted.	14.b Deleted.	14.b Deleted.

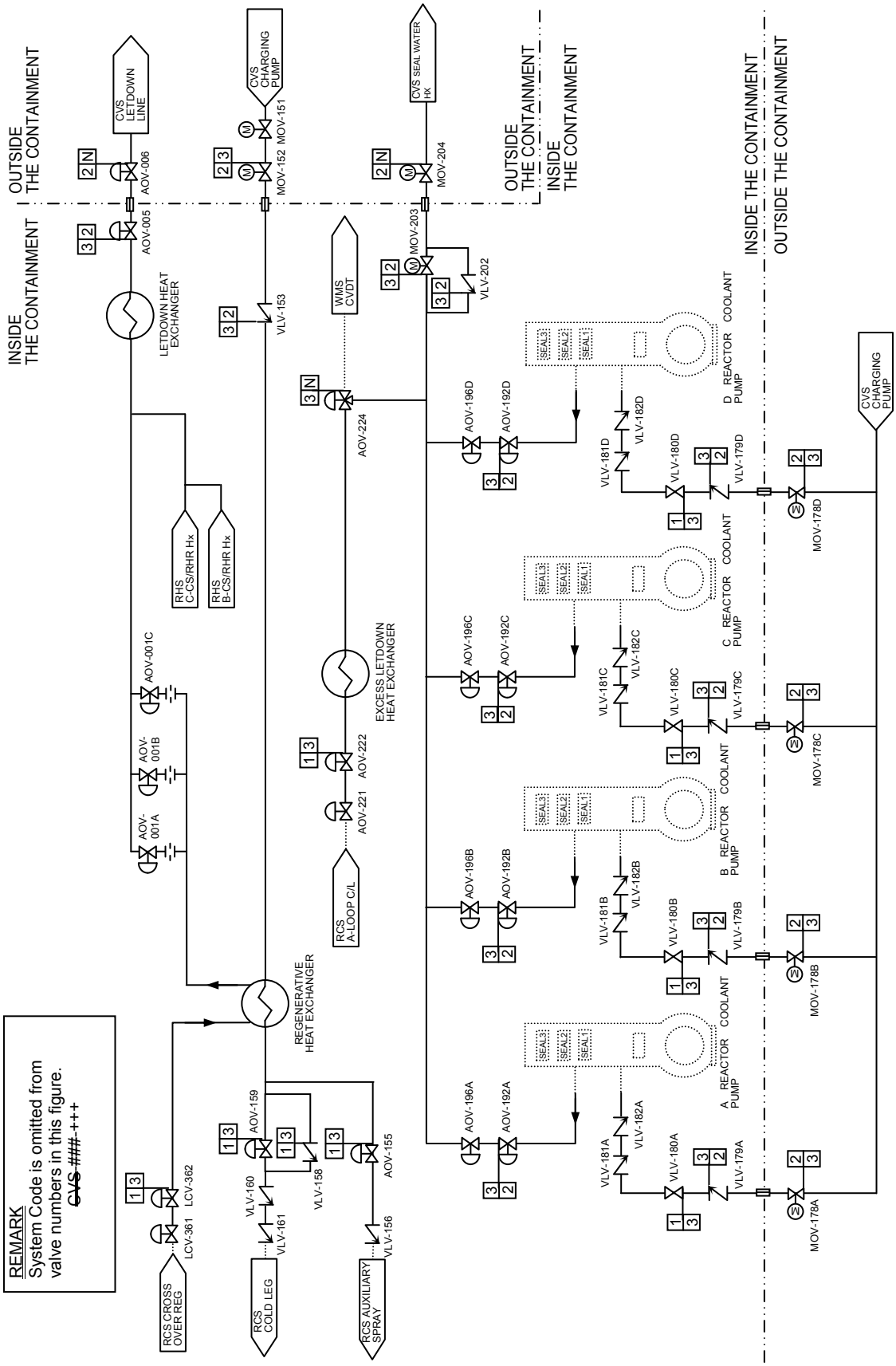

Figure 2.4.6-1 Chemical and Volume Control System (Sheet 1 of 2)

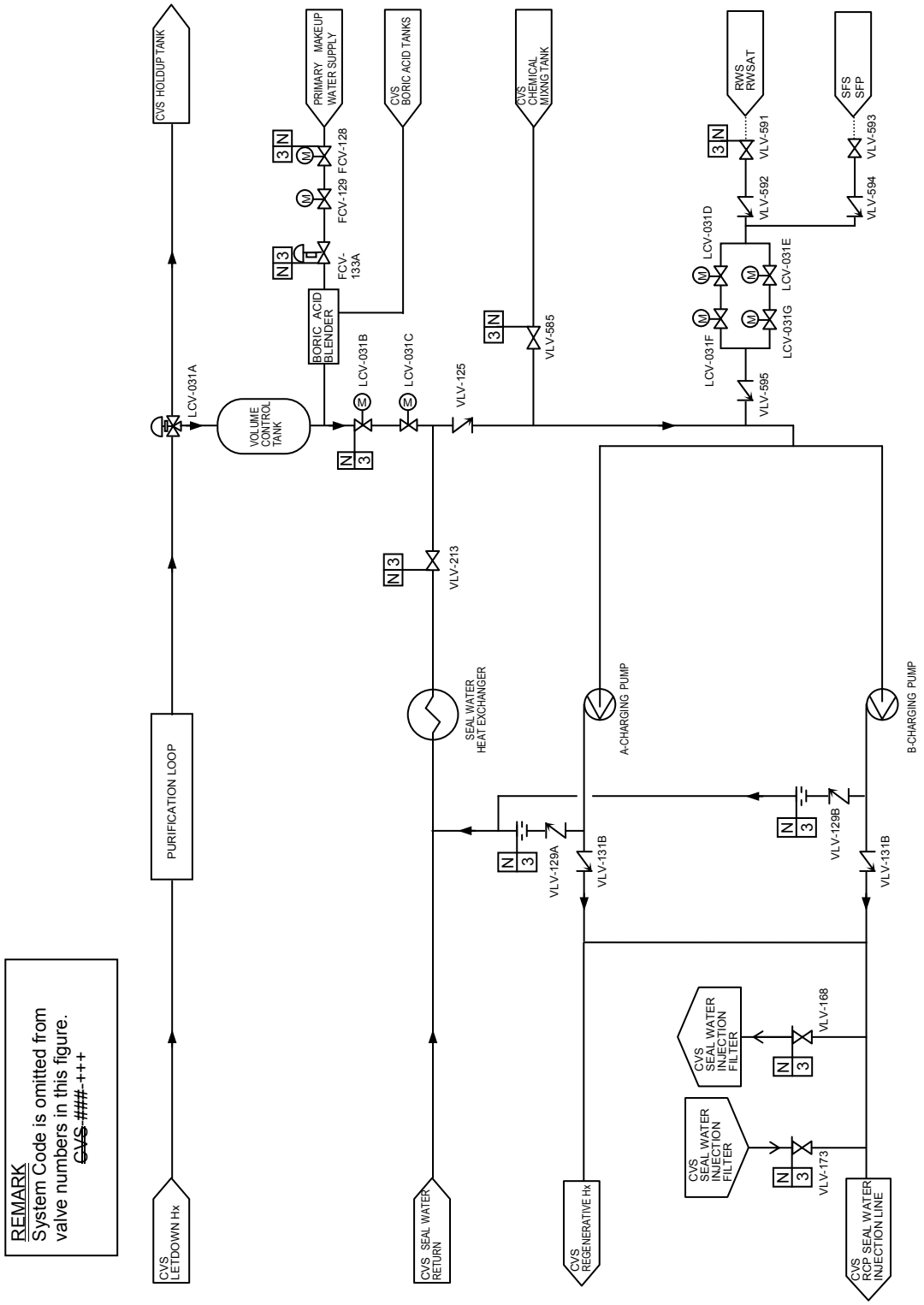

Figure 2.4.6-1 Chemical and Volume Control System (Sheet 2 of 2)

2.4.7 Reactor Coolant Pressure Boundary Leakage Detection System

2.4.7.1 Design Description

The reactor coolant pressure boundary (RCPB) leak detection system provides a means of detecting and, to the extent practical, identifying the source of reactor coolant leakage and monitoring leaks from the reactor coolant system and associated systems. The system is classified as non safety-related.

1. Indications of unidentified coolant leakage into the containment are provided by an air cooler condensate flow rate monitoring system, a containment sump level monitoring system and containment airborne particulate radioactivity monitor. These leak detection system instruments provide alarms and displays in the MCR indicating reactor coolant pressure boundary leakage.

2. Deleted.

2.4.7.2 Inspections, Tests, Analyses, and Acceptance Criteria

Table 2.4.7-1 describes the ITAAC for reactor coolant pressure boundary leakage detection system.

Table 2.7.6.6-2 describes additional ITAAC for the containment airborne particulate radioactivity monitors.

Table 2.4.7-1 Reactor Coolant Pressure Boundary Leakage Detection System Inspections, Tests, Analyses, and Acceptance Criteria

Design Commitment	Inspections, Tests, Analyses	Acceptance Criteria
1. Indications of unidentified coolant leakage into the containment are provided by an air cooler condensate flow rate monitoring system, a containment sump level monitoring system and containment airborne particulate radioactivity monitor. These leak detection system instruments provide alarms and displays in the MCR indicating reactor coolant pressure boundary leakage.	1.i Inspection will be performed for retrievability of the reactor coolant pressure boundary leakage detection alarms and displays from the as-built containment sump level LMS-LT-093A, B, the air cooler condensate standpipe level channel LMS-LT-092, and the containment airborne particulate radioactivity monitor RMS-RE-040 in the as-built MCR.	1.i Alarms and displays from the as-built reactor coolant pressure boundary leakage detection containment sump level channels LMS-LT-093A, B, the air cooler condensate standpipe level channel LMS-LT-092, and the containment airborne particulate radioactivity monitor RMS-RE-040 can be retrieved in the as-built MCR.
	1.ii Testing, by adding water to the as-built containment sump, and analysis, will be performed.	1.ii A report exists and concludes that the as-built sump level channels LMS-LT-093A, B have the capability to detect a change in leakage rate of 0.5 gpm or greater within an hour.
	1.iii Testing, by adding water to the as-built condensate standpipe, and analysis, will be performed.	1.iii A report exists and concludes that the as-built standpipe level channel LMS-LT-092 has the capability to detect a change in leakage rate of 0.5 gpm or greater within an hour.
	1.iv Tests and analyses of the as-built containment airborne particulate radioactivity monitor RMS-RE-040 will be performed.	1.iv A report exists and concludes that the as-built containment airborne particulate radioactivity monitor RMS-RE-040 has the required sensitivity and response time, which corresponds to the capability for detecting a change in leakage rate of 0.5 gpm or greater within 1 hour.
2. Deleted.	2. Deleted.	2. Deleted.

2.5 INSTRUMENTATION AND CONTROLS

2.5.1 Reactor Trip System and Engineered Safety Feature Systems

2.5.1.1 Design Description

The reactor trip (RT) system and the engineered safety feature (ESF) system and the associated field equipment are part of the protection and safety monitoring system (PSMS). The PSMS includes the reactor protection system (RPS), the engineered safety features actuation system (ESFAS), the safety logic system (SLS) and the safety grade human system interface system (HSIS). The PSMS consists of four safety divisions.

The purpose of the PSMS is to provide protection against unsafe reactor operation during steady-state and transient power operation by automatically tripping the reactor and actuating necessary engineered safety features. These trip and actuation functions are implemented by the RT system and the ESF system, respectively. The safety grade HSIS includes conventional switches for manual actuation of reactor trip and ESF actuation. Table 2.5.1-1 shows equipment names and classifications of the PSMS and the field equipment for the RT system and the ESF system.

The safety visual display units (VDUs) and the safety VDU processors, which are part of the PSMS, provide monitoring and control for the safety-related plant components and instrumentation, including monitoring and control for the credited manual operator actions. The operational VDUs, which are part of the plant control and monitoring system (PCMS), also provide monitoring and control for the safety-related plant components and instrumentation, including the monitoring and control for the credited manual operator actions and monitoring of automatic ESF actuations.

1. The functional arrangement of the RPS is as described in the Design Description of Subsection 2.5.1 and in Table 2.5.1-2, and as shown in Figures 2.5.1-1 and 2.5.1-2.

2. The functional arrangements of the ESFAS, SLS and HSIS are as described in the Design Description of Subsection 2.5.1 and in Table 2.5.1-3, and as shown in Figures 2.5.1-2 and 2.5.1-3.

3. The functional arrangement of the RTBs is as described in the Design Description of Subsection 2.5.1 and as shown in Figure 2.5.1-4.

4. Conventional PSMS switches in the MCR can be used to provide manual initiation for reactor trip and ESF Manual Actuations identified in Tables 2.5.1-2 and 2.5.1-3.

5. The seismic Category I equipment identified in Table 2.5.1-1 can withstand seismic design basis loads without loss of safety function.

6. The Class 1E equipment identified in Table 2.5.1-1 as being qualified for a harsh environment can withstand the environmental conditions that would exist before, during, and following a design basis accident without loss of safety function for the time required to perform the safety function.

7. The RPS, ESFAS, SLS, safety VDU processor, and safety VDU are qualified to meet the electromagnetic conditions that would exist based on the equipment location in the facility, without loss of safety function.

8. The Class 1E equipment listed in Table 2.5.1-1 is located in a facility area that provides protection from accident related hazards such as missiles, pipe breaks and flooding.

9. The Class 1E PSMS equipment listed in Table 2.5.1-1 is powered from two safety-related power sources: the first source is its respective Class 1E division and the second source is from another division to ensure reliable power to each division of the PSMS.

10.a The redundant divisions of PSMS and field equipment listed in Table 2.5.1-1 are physically separated and electrically independent of each other and physically separated and electrically independent of any non-safety systems.

10.b Deleted.

11. The PSMS, via PCMS, provides the operator with: (1) non-safety HSIS indications of the bypassed or inoperable status indication (BISI) for RT actuation, ESF actuations identified in Table 2.5.1-3, and interlocks important to safety identified in Table 2.5.1-4; and (2) the ability to manually actuate the BISI for protective actions.

12. The PSMS cabinets have key locks and door position alarms, and are located in a vital area of the facility.

13. Redundant safety equipment of the PSMS and field equipment listed in Table 2.5.1-1 are provided with a clear means of identification.

14.a The PSMS initiates automatic reactor trips and ESF actuations, identified in Tables 2.5.1-2 and 2.5.1-3, when the plant process signals reach a predetermined limit.

14.b Once initiated (automatically or manually), the intended sequences of safety-related functions as identified in Tables 2.5.1-2 and 2.5.1-3 of the PSMS continue until completion, and, after completion, deliberate operator action is required to return the safety related systems to normal.

15. Deleted.

16. The PSMS signals are derived from direct measurements described in Table 2.5.1-2 and Table 2.5.1-3.

17.a The PSMS is designed to facilitate the timely recognition, location, replacement, repair and adjustment of malfunctioning components or modules.

17.b A single channel or division of the PSMS can be bypassed to allow on-line testing, maintenance or repair and this capability does not prevent the PSMS from performing its safety function.

18. The PSMS automatically removes the operating bypasses listed in Table 2.5.1-7 when permissive conditions are not met.

19. Deleted.

20. Deleted.

21. The RT logic of the PSMS is designed to fail to a safe state such that loss of electrical power to a division of PSMS results in a trip condition for that division. Loss of electrical power to a division of the PSMS ESF logic does not result in ESF actuation.

22. The RT and ESF actuation instrumentation that is required to function during normal operation, anticipated operational occurrence (AOO) and postulated accident (PA) conditions is provided with adequate range to monitor normal operating, AOO and PA events. The monitored variables are listed in Tables 2.5.1-2 and 2.5.1-3.

23. The PSMS provides the interlocks important to safety identified in Table 2.5.1-4.

24. The PSMS hardware and software are developed and managed by the Basic and Application Software Program Manuals that meet the regulatory requirements for Class 1E safety systems, and which encompasses the entire product life cycle including software V&V and configuration management.

25.a Manual controls from the operational VDU are blocked from the safety VDU and can be disabled manually from the safety VDU. The logic in the SLS blocks non-safety signals from the PCMS when any safety function signal is present, such as a safety interlock or ESF actuation signal.

25.b Automatic ESFAS actuation signals identified in Table 2.5.1-3 and the interlocks important to safety identified in Table 2.5.1-4 override PCMS control signals.

26. A signal selection algorithm (SSA) is provided in the PCMS for the monitoring variables as listed in Table 2.5.1-5 to ensure the PCMS does not take control action that results in a condition which requires RT or ESF action based on a single instrument channel failure or a single RPS division failure.

27. Input sensors from each division of the PSMS as identified in Table 2.5.1-2 and Table 2.5.1-3 are compared continuously in the PCMS to allow detection of out-of-tolerance sensors.

28. Deleted.

29.a ESF systems are automatically initiated from signals that originate in the RPS as described in Table 2.5.1-3.

29.b Manual actuation of ESF systems is carried out through a diverse signal path that bypasses the RPS.

30.a Deleted.

30.b Deleted.

2.5.1.2 Inspections, Tests, Analyses, and Acceptance Criteria

Table 2.5.1-6 describes the ITAAC for the RT system and the ESF system.

Table 2.5.1-1 Equipment Names and Classifications of PSMS and Field Equipment for RT System and ESF System

Equipment Name	Seismic Category I	Class 1E	Qualification for Harsh Environment
PSMS			
RPS Division A/B/C/D	Yes	Yes	No
ESFAS Division A/B/C/D	Yes	Yes	No
SLS Division A/B/C/D	Yes	Yes	No
MCR*[1] Safety VDU Division A/B/C/D	Yes	Yes	No
RSR*[2] Safety VDU Division A/B/C/D	Yes	Yes	No
Safety VDU Processor Division A/B/C/D	Yes	Yes	No
MCR Division Level Switches A/B/C/D	Yes	Yes	No
MCR/RSR Transfer Panels*[3]	Yes	Yes	No
Field Equipment			
RTB Division A/B/C/D	Yes	Yes	No
RT and ESF Measurement Instrumentation	Yes	Yes	Yes*[4]/No

Note1: Main Control Room
Note2: Remote Shutdown Room
Note3: Transfer function is described in Subsection 2.5.2.
Note4: Field equipment which is located in the harsh environment

Table 2.5.1-2 Reactor Trip and Monitored Variables

Actuation Signal	Monitored Variables
High Source Range Neutron Flux	Neutron Flux
High Intermediate Range Neutron Flux	Neutron Flux
High Power Range Neutron Flux (Low Setpoint)	Neutron Flux*[1]
High Power Range Neutron Flux (High Setpoint)	Neutron Flux*[1]
High Power Range Neutron Flux Positive Rate	Neutron Flux*[1]
High Power Range Neutron Flux Negative Rate	Neutron Flux*[1]
Over Temperature ΔT	Reactor Coolant Temperature*[2]
	Pressurizer Pressure
	Neutron Flux*[1]
Over Power ΔT	Reactor Coolant Temperature*[2]
	Neutron Flux*[1]
Low Reactor Coolant Flow	Reactor Coolant Flow
Low Reactor Coolant Pump Speed	Reactor Coolant Pump Speed
Low Pressurizer Pressure	Pressurizer Pressure
High Pressurizer Pressure	Pressurizer Pressure
High Pressurizer Water Level	Pressurizer Water Level
Low Steam Generator Water Level	Steam Generator Water Level
High-High Steam Generator Water Level	Steam Generator Water Level
ECCS Actuation	Refer to ECCS Actuations in Table 2.5.1-3.
Manual Actuation	Manual Switch Position (Reactor Trip Switch)

Notes:
1: Power Range Neutron flux is a spatially dependent variable due to axial variations.
2. Reactor Coolant System hot leg (3 sensors) is spatially dependent.

Table 2.5.1-3 ESF Actuations and Monitored Variables (Sheet 1 of 3)

ESF Function	Actuation Signal	Monitored Variables
ECCS Actuation	Low Pressurizer Pressure	Pressurizer Pressure
	Low Main Steam Line Pressure	Main Steam Line Pressure
	High Containment Pressure	Containment Pressure
	Manual Actuation	Manual Switch Position (ECCS Actuation Switch)
Main Steam Line Isolation	High-High Containment Pressure	Containment Pressure
	Low Main Steam Line Pressure	Main Steam Line Pressure
	High Main Steam Line Pressure Negative Rate	Main Steam Line Pressure
	Manual Actuation	Manual Switch Position (Main Steam Line Isolation Switch)
Containment Isolation Phase A	ECCS Actuation	ECCS Actuation Signal
	Manual Actuation	Manual Switch Position (Containment Isolation Switch)
Containment Isolation Phase B	High-3 Containment Pressure	Containment Pressure
	Manual Actuation	Manual Switch Position (Containment Spray Switch)
Containment Purge Isolation	ECCS Actuation	ECCS Actuation Signal
	High Containment Area Radiation	Containment Area Radiation
	Manual Actuation	Manual Switch Position (Containment Isolation Switch) (Containment Spray Switch)
Containment Spray	High-3 Containment Pressure	Containment Pressure
	Manual Actuation	Manual Switch Position (Containment Spray Switch)

Table 2.5.1-3 ESF Actuations and Monitored Parameters (Sheet 2 of 3)

ESF Function	Actuation Signal	Monitored Variables
Emergency Feedwater Actuation	ECCS Actuation	ECCS Actuation Signal
	Low Steam Generator Water Level	Steam Generator Water Level
	Loss of Offsite Power	Class 1E 6.9kV Bus Voltage
	Manual Actuation	Manual Switch Position (Emergency Feedwater Actuation Switch)
Emergency Feedwater Isolation Loop A (Loop B, C, D) *1	Low Main Steam Line Pressure	Main Steam Line Pressure
	High Steam Generator Water level	Steam Generator Water Level
	Manual Actuation	Manual Switch Position (Emergency Feedwater Isolation Switch)
Main Control Room Isolation	ECCS Actuation	ECCS Actuation Signal
	High Main Control Room Outside Air Intake Radiation	Main Control Room Outside Air Intake Gas Radiation
		Main Control Room Outside Air Intake Iodine Radiation
		Main Control Room Outside Air Intake Particulate Radiation
	Manual Actuation	Manual Switch Position (Main Control Room Isolation Switch)
Main Feedwater Regulation Valve Closure	Low T_{avg} coincident with RT (P-4)	Reactor Coolant Temperature*2
		Reactor Trip (RTB Open)
Main Feedwater Isolation	High-High Steam Generator Water Level	Steam Generator Water Level
	ECCS Actuation	ECCS Actuation Signal
	Manual Actuation	Manual Switch Position (Main Feedwater Isolation Switch)

Note1: Loop A isolation is initiated by steam generator water level signal and main steam line pressure signal from loop A. All loops are identical (e.g., loop B isolation is initiated by the signal from loop B).
Note 2: Reactor Coolant System hot leg (3 sensors) is spatially dependent.

Table 2.5.1-3 ESF Actuations and Monitored Parameters (Sheet 3 of 3)

ESF Function	Actuation Signal	Monitored Variables
CVCS Isolation	High Pressurizer Water Level	Pressurizer Water Level
	Manual Actuation	Manual Switch Position (CVCS Isolation Switch)

Table 2.5.1-4 Interlocks Important to Safety

Containment Spray/Residual Heat Removal Pump Hot Leg Isolation Valve Open Permissive Interlock
Simultaneous-Open Block Interlock with Residual Heat Removal Discharge Line Containment Isolation Valve and Containment Spray Header Containment Isolation Valve
Simultaneous-Open Block Interlock with Containment Spray/Residual Heat Removal Pump Hot Leg Isolation Valve and Containment Spray Header Containment Isolation Valve
Reactor Makeup Water Line Isolation Interlock
Accumulator Discharge Valve Open Interlock
Component Cooling Water Supply and Return Header Tie Line Isolation Interlock
RCP Thermal Barrier Heat Exchanger Component Cooling Water Return Line Isolation Interlock
Low-Pressure Letdown Line Isolation Interlock

Table 2.5.1-5 Monitored Variables Using Signal Selection Algorithms (SSA)

Power Range Neutron Flux
Reactor Coolant Temperature
Pressurizer Pressure
Pressurizer Water Level
Steam Generator Water Level
Main Steam Line Pressure
Turbine Inlet Pressure

Table 2.5.1-6 RT System and ESF System Inspections, Tests, Analyses, and Acceptance Criteria (Sheet 1 of 9)

Design Commitment	Inspections, Tests, Analyses	Acceptance Criteria
1. The functional arrangement of the RPS is as described in the Design Description of Subsection 2.5.1 and in Table 2.5.1-2, and as shown in Figures 2.5.1-1 and 2.5.1-2.	1. Inspection of the as-built RPS will be performed.	1. The as-built RPS conforms to the functional arrangement as described in the Design Description of Subsection 2.5.1 and in Table 2.5.1-2, and as shown in Figures 2.5.1-1 and 2.5.1-2.
2. The functional arrangements of the ESFAS, SLS and HSIS are as described in the Design Description of Subsection 2.5.1 and in Table 2.5.1-3, and as shown in Figures 2.5.1-2 and 2.5.1-3.	2. Inspection of the as-built ESFAS, SLS and HSIS will be performed.	2. The as-built ESFAS, SLS and HSIS conform to the functional arrangement as described in the Design Description of Subsection 2.5.1 and in Table 2.5.1-3, and as shown in Figures 2.5.1-2 and 2.5.1-3.
3. The functional arrangement of the RTBs is as described in the Design Description of Subsection 2.5.1 and as shown in Figure 2.5.1-4.	3. Inspection of the as-built RTBs will be performed.	3. The as-built RTBs conform to the functional arrangement as described in the Design Description of Subsection 2.5.1 and as shown in Figure 2.5.1-4.
4. Conventional PSMS switches in the MCR can be used to provide manual initiation for reactor trip and ESF Manual Actuations identified in Tables 2.5.1-2 and 2.5.1-3.	4. A test of the as-built conventional PSMS manual actuation switches for RT and ESF functions will be performed.	4. As-built conventional PSMS switches in the MCR can be used to provide manual initiation for the reactor trip Manual Actuation identified in Table 2.5.1-2 and the ESF Manual Actuations identified in Table 2.5.1-3.

Table 2.5.1-6 RT System and ESF System Inspections, Tests, Analyses, and Acceptance Criteria (Sheet 2 of 9)

Design Commitment	Inspections, Tests, Analyses	Acceptance Criteria
5. The seismic Category I equipment identified in Table 2.5.1-1 can withstand seismic design basis loads without loss of safety function.	5.i Inspections will be performed to verify that the as-built seismic Category I equipment identified in Table 2.5.1-1 is located in a seismic Category I structure.	5.i The as-built seismic Category I equipment identified in Table 2.5.1-1 is located in a seismic Category I structure.
	5.ii Type tests, analyses, or a combination of type tests and analyses, of seismic Category I equipment identified in Table 2.5.1-1 will be performed using analytical assumptions, or will be performed under conditions which bound the seismic design basis requirements.	5.ii A report exists and concludes that the seismic Category I equipment identified in Table 2.5.1-1 can withstand seismic design basis loads without loss of safety function.
	5.iii Inspections and analyses will be performed to verify the as-built seismic Category I equipment identified in Table 2.5.1-1, including anchorages, is seismically bounded by the tested or analyzed conditions.	5.iii A report exists and concludes that the as-built seismic Category I equipment identified in Table 2.5.1-1, including anchorages, is seismically bounded by the tested or analyzed conditions.
6. The Class 1E equipment identified in Table 2.5.1-1 as being qualified for a harsh environment can withstand the environmental conditions that would exist before, during, and following a design basis accident without loss of safety function for the time required to perform the safety function.	6.i Type tests or a combination of type tests and analyses using the design environmental conditions, or under the conditions which bound the design environmental conditions, will be performed on Class 1E equipment identified in Table 2.5.1-1 as being qualified for a harsh environment.	6.i A report exists and concludes that the Class 1E equipment identified in Table 2.5.1-1 as being qualified for a harsh environment can withstand the environmental conditions that would exist before, during, and following a design basis accident without loss of safety function for the time required to perform its safety function.
	6.ii Inspection will be performed of the as-built Class 1E equipment identified in Table 2.5.1-1 as being qualified for a harsh environment and the associated wiring, cables, and terminations located in a harsh environment.	6.ii The as-built Class 1E equipment and the associated wiring, cables, and terminations identified in Table 2.5.1-1 as being qualified for a harsh environment are bounded by type tests or a combination of type tests and analyses.

Table 2.5.1-6 RT System and ESF System Inspections, Tests, Analyses, and Acceptance Criteria (Sheet 3 of 9)

Design Commitment	Inspections, Tests, Analyses	Acceptance Criteria
7. The RPS, ESFAS, SLS, safety VDU processor, and safety VDU are qualified to meet the electromagnetic conditions that would exist based on the equipment location in the facility, without loss of safety function.	7. Type tests or a combination of type tests and analyses will be performed on the equipment.	7. A report exists and concludes that the RPS, ESFAS, SLS, safety VDU processor, and safety VDU are qualified to meet the electromagnetic conditions that would exist based on the equipment location in the facility, without loss of safety function.

Table 2.5.1-6 RT System and ESF System Inspections, Tests, Analyses, and Acceptance Criteria (Sheet 4 of 9)

Design Commitment	Inspections, Tests, Analyses	Acceptance Criteria
8. The Class 1E equipment listed in Table 2.5.1-1 is located in a facility area that provides protection from accident related hazards such as missiles, pipe breaks and flooding.	8. An inspection of the as-built equipment location will be performed.	8. The as-built equipment listed in Table 2.5.1-1 is located in a plant area that provides protection from accident related hazards such as missiles, pipe breaks and flooding.
9. The Class 1E PSMS equipment listed in Table 2.5.1-1 is powered from two safety-related power sources: the first source is its respective Class 1E division and the second source is from another division to ensure reliable power to each division of the PSMS.	9. Inspection of the as-built PSMS equipment will be performed.	9. The Class 1E as-built PSMS equipment listed in Table 2.5.1-1 is powered from two safety-related power sources: the first source is its respective Class 1E division and the second source is from another division of the PSMS.
10.a The redundant divisions of PSMS and field equipment listed in Table 2.5.1-1 are physically separated and electrically independent of each other and physically separated and electrically independent of any non-safety systems.	10.a.i 1) An inspection of the as-built PSMS and field equipment will be performed to verify physical separation. 2) Analyses, tests or a combination of analyses and tests of the as-built PSMS and field equipment will be performed to verify its electrical independence.	10.a.i 1) The as-built PSMS and field equipment redundant divisions' physical separation is provided by distance or barriers in accordance with RG 1.75. 2) A report exists and concludes that as-built PSMS and field equipment redundant divisions' electrical independence is achieved by independent power sources and electrical circuits for each division, and by fiber optic cable interfaces, conventional isolators, or other proven isolation methods or devices at interfaces between redundant divisions, and at interfaces between safety and non-safety systems.

Table 2.5.1-6 RT System and ESF System Inspections, Tests, Analyses, and Acceptance Criteria (Sheet 5 of 9)

Design Commitment	Inspections, Tests, Analyses	Acceptance Criteria
	10.a.ii Type tests or analyses, or a combination of type tests and analyses of the isolation devices will be performed.	10.a.ii A report exists and concludes that the isolation devices prevent credible faults.
10.b Deleted.	10.b.i Deleted.	10.b.i Deleted.
	10.b.ii Deleted.	10.b.ii Deleted.
11. The PSMS, via PCMS, provides the operator with: (1) non-safety HSIS indications of the bypassed or inoperable status indication (BISI) for RT actuation, ESF actuations identified in Table 2.5.1-3, and interlocks important to safety identified in Table 2.5.1-4; and (2) the ability to manually actuate the BISI for protective actions.	11. A test of the as-built equipment will be performed.	11. The as-built PSMS, via the as-built PCMS, provides the operator with: (1) automatic non-safety HSIS BISI for RT actuation, ESF actuations identified in Table 2.5.1-3, and interlocks important to safety identified in Table 2.5.1-4 and (2) the ability to manually actuate the BISI for these protective actions.
12. The PSMS cabinets have key locks and door position alarms, and are located in a vital area of the facility.	12.i A test of the as-built PSMS cabinets for key lock capability, and a test of door position alarms, will be performed.	12.i Each cabinet of the as-built PSMS has key locking capability, and alarms are received in the as-built MCR when cabinet doors are opened.
	12.ii An inspection of the as-built PSMS cabinets will be performed for the installed location.	12.ii Each cabinet of the as-built PSMS is located in a vital area of the facility.
13. Redundant safety equipment of the PSMS and field equipment listed in Table 2.5.1-1 are provided with a clear means of identification.	13. An inspection of the as-built equipment for conformance with equipment color coding requirements will be performed.	13. The as-built equipment listed in Table 2.5.1-1 complies with the color coding requirements.
14.a The PSMS initiates automatic reactor trips and ESF actuations, identified in Tables 2.5.1-2 and 2.5.1-3, when the plant process signals reach a predetermined limit.	14.a A test of the as-built PSMS will be performed.	14.a The as-built PSMS initiates automatic reactor trips and ESF actuations, identified in Tables 2.5.1-2 and 2.5.1-3, when the plant process signals reach a predetermined limit.

Table 2.5.1-6 RT System and ESF System Inspections, Tests, Analyses, and Acceptance Criteria (Sheet 6 of 9)

Design Commitment	Inspections, Tests, Analyses	Acceptance Criteria
14.b Once initiated (automatically or manually), the intended sequences of safety-related functions as identified in Tables 2.5.1-2 and 2.5.1-3 of the PSMS continue until completion, and, after completion, deliberate operator action is required to return the safety related systems to normal.	14.b A test of the as-built PSMS will be performed.	14.b Once initiated (automatically or manually), the intended sequences of safety-related functions as identified in Tables 2.5.1-2 and 2.5.1-3 of the as-built PSMS continue until completion, and, after completion, deliberate operator action is required to return the safety related systems to normal.
15. Deleted.	15. Deleted.	15. Deleted.
16. The PSMS signals are derived from direct measurements described in Table 2.5.1-2 and Table 2.5.1-3.	16. An inspection of the as-built PSMS will be performed to verify that input signals are from direct measurement of sensor output described in Table 2.5.1-2 and Table 2.5.1-3.	16. The input signals to the as-built PSMS are derived from direct measurements described in Table 2.5.1-2 and Table 2.5.1-3.
17.a The PSMS is designed to facilitate the timely recognition, location, replacement, repair and adjustment of malfunctioning components or modules.	17.a Tests and analyses of the as-built PSMS will be performed.	17.a A report exists and concludes that the as-built PSMS is designed to facilitate recognition and location of malfunctioning components or modules.
17.b A single channel or division of the PSMS can be bypassed to allow on-line testing, maintenance or repair and this capability does not prevent the PSMS from performing its safety function.	17.b Tests will be performed to confirm the as-built channel or division bypass capabilities and to confirm the function of the bypass interlock logic.	17.b A single channel or division of the as-built PSMS can be bypassed to allow on-line testing, maintenance or repair and this capability does not prevent the PSMS from performing its safety function.
18. The PSMS automatically removes the operating bypasses listed in Table 2.5.1-7 when permissive conditions are not met.	18. A test of the as-built PSMS will be performed.	18. The as-built PSMS automatically removes the operating bypasses listed in Table 2.5.1-7 when permissive conditions are not met.
19. Deleted.	19. Deleted.	19. Deleted.

Table 2.5.1-6 RT System and ESF System Inspections, Tests, Analyses, and Acceptance Criteria (Sheet 7 of 9)

Design Commitment	Inspections, Tests, Analyses	Acceptance Criteria
20. Deleted.	20. Deleted.	20. Deleted.
21. The RT logic of the PSMS is designed to fail to a safe state such that loss of electrical power to a division of PSMS results in a trip condition for that division. Loss of electrical power to a division of the PSMS ESF logic does not result in ESF actuation.	21. A test will be performed by disconnecting the electrical power to each division of the as-built PSMS.	21. Each division of the as-built RT logic of the as-built PSMS fails to a safe state upon loss of electrical power to the division (i.e., results in a trip condition for that division), and loss of electric power to a division of the as-built PSMS ESF logic does not result in ESF actuation.
22. The RT and ESF actuation instrumentation that is required to function during normal operation, anticipated operational occurrence (AOO) and postulated accident (PA) conditions is provided with adequate range to monitor normal operating, AOO and PA events. The monitored variables are listed in Tables 2.5.1-2 and 2.5.1-3.	22. An inspection of the as-built RT and ESF actuation instrumentation ranges will be performed.	22. The ranges of the as-built PSMS RT and ESF actuation instrumentation that is required to function during normal operation, anticipated operational occurrences (AOO) and postulated accident (PA) conditions, and that is listed in Tables 2.5.1-2 and 2.5.1-3, meet design requirements.
23. The PSMS provides the interlocks important to safety identified in Table 2.5.1-4.	23. A test of the as-built PSMS will be performed.	23. The as-built PSMS provides the interlocks important to safety identified in Table 2.5.1-4 when the simulated plant process signals reach a predetermined limit.
24. The PSMS hardware and software are developed and managed by the Basic and Application Software Program Manuals that meet the regulatory requirements for Class 1E safety systems, and which encompasses the entire product life cycle including software V&V and configuration management.	24. Inspections of the as-built hardware and software life cycle documentation of the PSMS will be performed.	24. The as-built PSMS hardware and software are developed and managed by the Basic and Application Software Program Manuals that meet the regulatory requirements for Class 1E safety systems, and which encompasses the entire product life cycle including software V&V and configuration management.

Table 2.5.1-6 RT System and ESF System Inspections, Tests, Analyses, and Acceptance Criteria (Sheet 8 of 9)

Design Commitment	Inspections, Tests, Analyses	Acceptance Criteria
25.a Manual controls from the operational VDU are blocked from the safety VDU and can be disabled manually from the safety VDU. The logic in the SLS blocks non-safety signals from the PCMS when any safety function signal is present, such as a safety interlock or ESF actuation signal.	25.a Tests of the as-built PSMS will be performed.	25.a Manual controls from the operational VDU are blocked from the as-built safety VDU and can be disabled manually from the as-built safety VDU. The logic in the as-built SLS blocks non-safety signals from the PCMS when any safety function signal is present, such as a safety interlock or ESF actuation signal.
25.b Automatic ESFAS actuation signals identified in Table 2.5.1-3 and the interlocks important to safety identified in Table 2.5.1-4 override PCMS control signals.	25.b A test of the as-built PSMS will be performed to confirm that simulated ESFAS actuation signals identified in Table 2.5.1-3 and the interlocks important to safety identified in Table 2.5.1-4 override as-built PCMS control signals.	25.b As-built PCMS control signals are overridden by simulated automatic ESFAS actuation signals identified in Table 2.5.1-3 and the interlocks important to safety identified in Table 2.5.1-4 in the as-built PSMS.
26. A signal selection algorithm (SSA) is provided in the PCMS for the monitoring variables as listed in Table 2.5.1-5 to ensure the PCMS does not take control action that results in a condition which requires RT or ESF action based on a single instrument channel failure or a single RPS division failure.	26. A test of the as-built PCMS SSA functions will be performed using simulated signals.	26. The as-built PCMS SSA functions to ensure the PCMS does not take control action that results in a condition which requires RT or ESF action based on a single instrument channel failure or a single RPS division failure, for the monitored variables listed in Table 2.5.1-5.
27. Input sensors from each division of the PSMS as identified in Table 2.5.1-2 and Table 2.5.1-3 are compared continuously in the PCMS to allow detection of out-of-tolerance sensors.	27. A test of the as-built PCMS function will be performed utilizing simulated signals.	27. Input sensors as identified in Table 2.5.1-2 and Table 2.5.1-3 from each division of the as-built PSMS that are out-of-tolerance can be detected by the PCMS.
28. Deleted.	28. Deleted.	28. Deleted.
29.a ESF systems are automatically initiated from signals that originate in the RPS as described in Table 2.5.1-3.	29.a A test of the as-built PSMS will be performed.	29.a As-built ESF systems are automatically initiated from signals that originate in the as-built RPS as described in Table 2.5.1-3.

Table 2.5.1-6 RT System and ESF System Inspections, Tests, Analyses, and Acceptance Criteria (Sheet 9 of 9)

Design Commitment	Inspections, Tests, Analyses	Acceptance Criteria
29.b Manual actuation of ESF systems is carried out through a diverse signal path that bypasses the RPS.	29.b A test of the as-built PSMS will be performed.	29.b Manual actuation of the as-built ESF systems is carried out through a diverse signal path that bypasses the as-built RPS.
30.a Deleted.	30.a Deleted.	30.a Deleted.
30.b Deleted.	30.b Deleted.	30.b Deleted.

Table 2.5.1-7 Operating Bypasses

Designation		RT and/or ESF	Function
P-6	Intermediate Range Neutron Flux Above or Below Setpoint	RT	Below setpoint • Remove manual operating bypass for high source range neutron flux reactor trip.
P-7	Turbine Inlet Pressure (P-13) or Power Range Neutron Flux (P-10) Above Setpoint or Turbine Inlet Pressure (P-13) and Power Range Neutron Flux (P-10) Below Setpoint	RT	Above setpoint • Remove operating bypass for low pressurizer pressure reactor trip. • Remove operating bypass for low reactor coolant flow reactor trip. • Remove operating bypass for low RCP speed reactor trip. • Remove operating bypass for high pressurizer water level reactor trip. • Remove operating bypass for high-high SG water level reactor trip. • Remove operating bypass for reactor trip by turbine trip.
P-10	Power Range Neutron Flux Above or Below Setpoint	RT	Below setpoint • Remove manual operating bypass for high intermediate range neutron flux reactor trip. • Remove manual operating bypass for high power range neutron flux (low setpoint) reactor trip.
P-11	Pressurizer Pressure Above or Below Setpoint	ESF	Above setpoint • Remove manual operating bypass for low pressurizer pressure ECCS actuation. • Remove manual operating bypass for high-high SG water level MFW isolation function for all MFW pumps, all MFW isolation valves, and all SG water filling control valves. • Remove manual operating bypass for high pressurizer water level CVCS. • Remove manual operating bypass for EFW isolation. • Remove manual operating bypass for low main steam line pressure ECCS actuation. • Remove manual operating bypass for low main steam line pressure main steam line isolation.

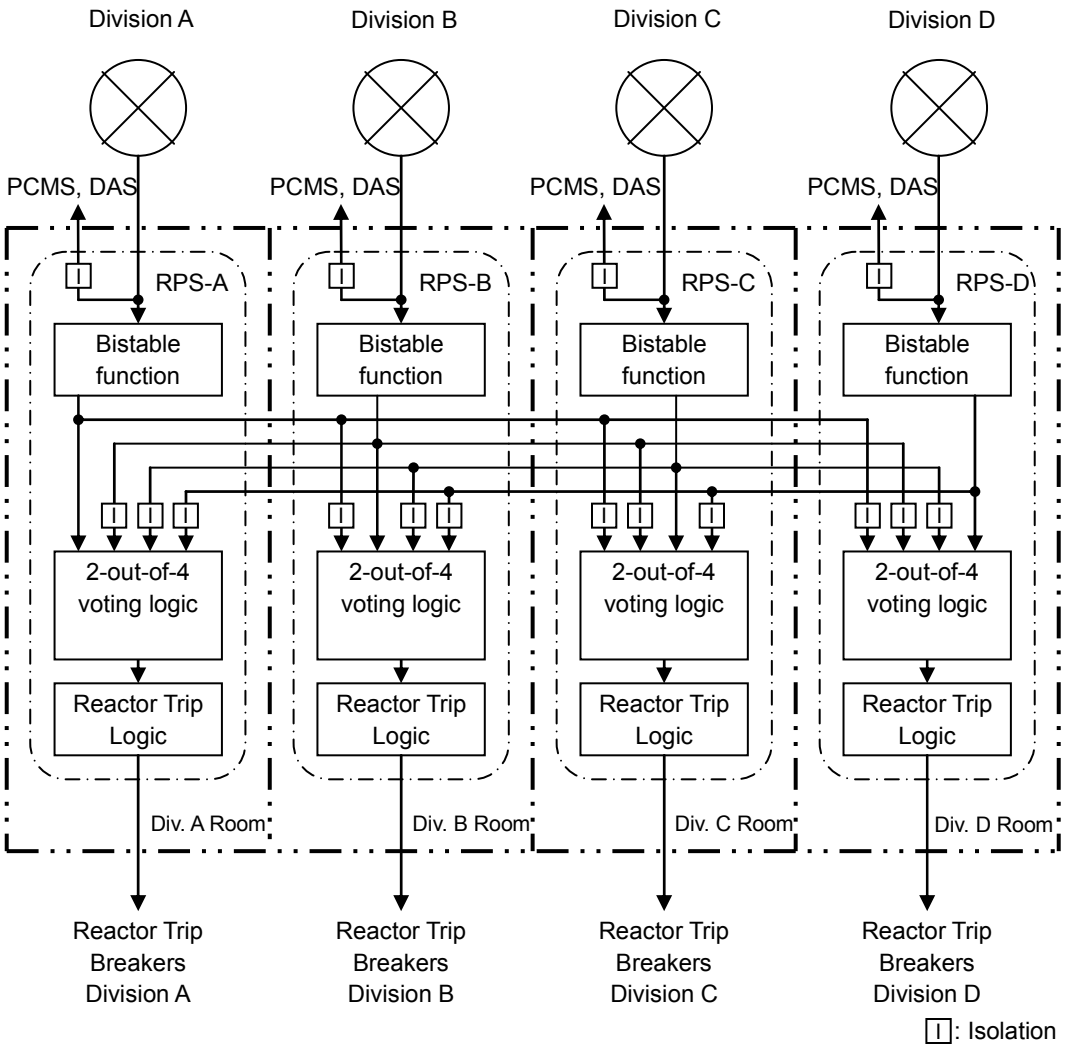

Figure 2.5.1-1 Configuration of the Reactor Trip System

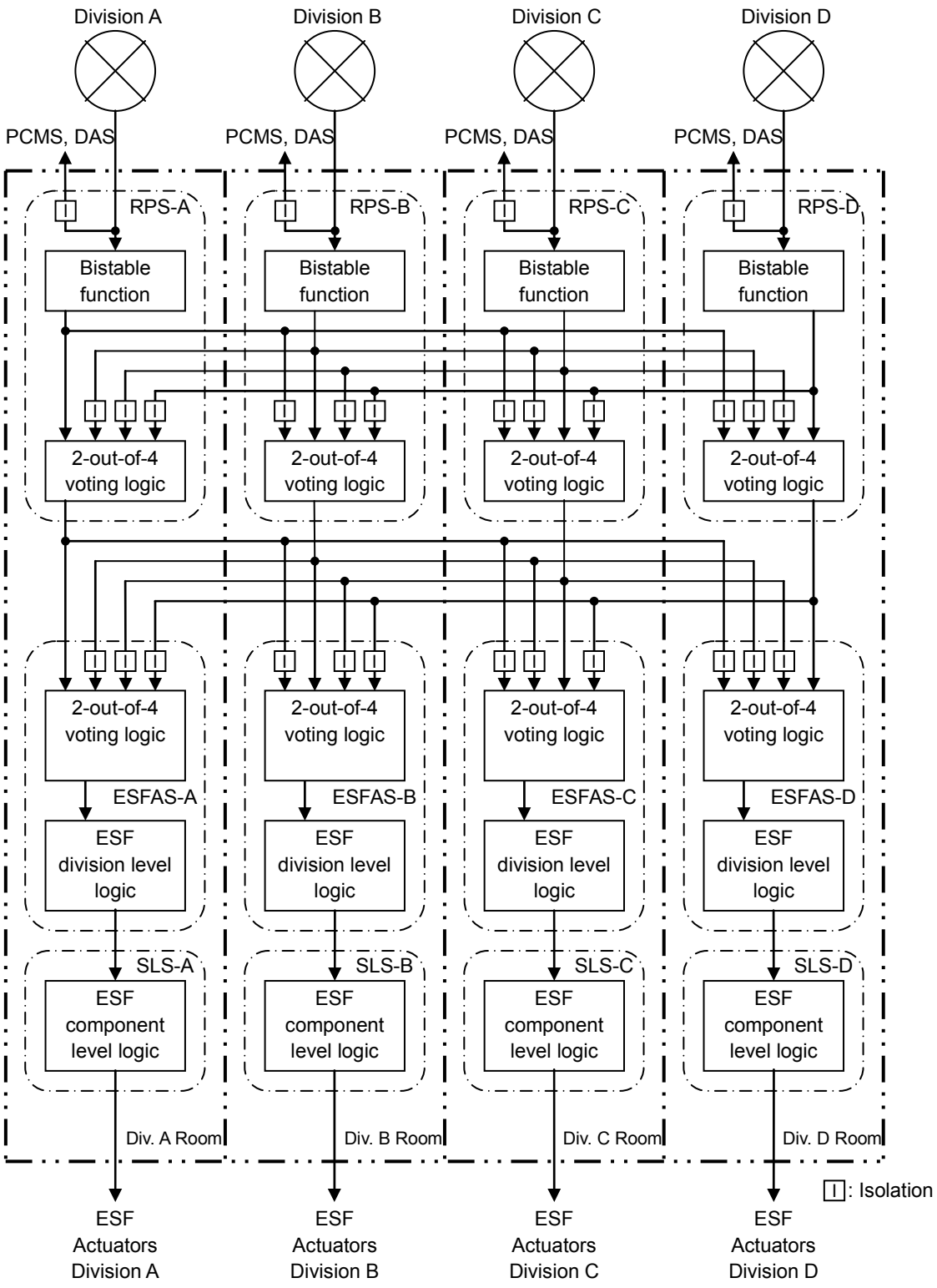

Figure 2.5.1-2 Configuration of the Engineered Safety Feature System

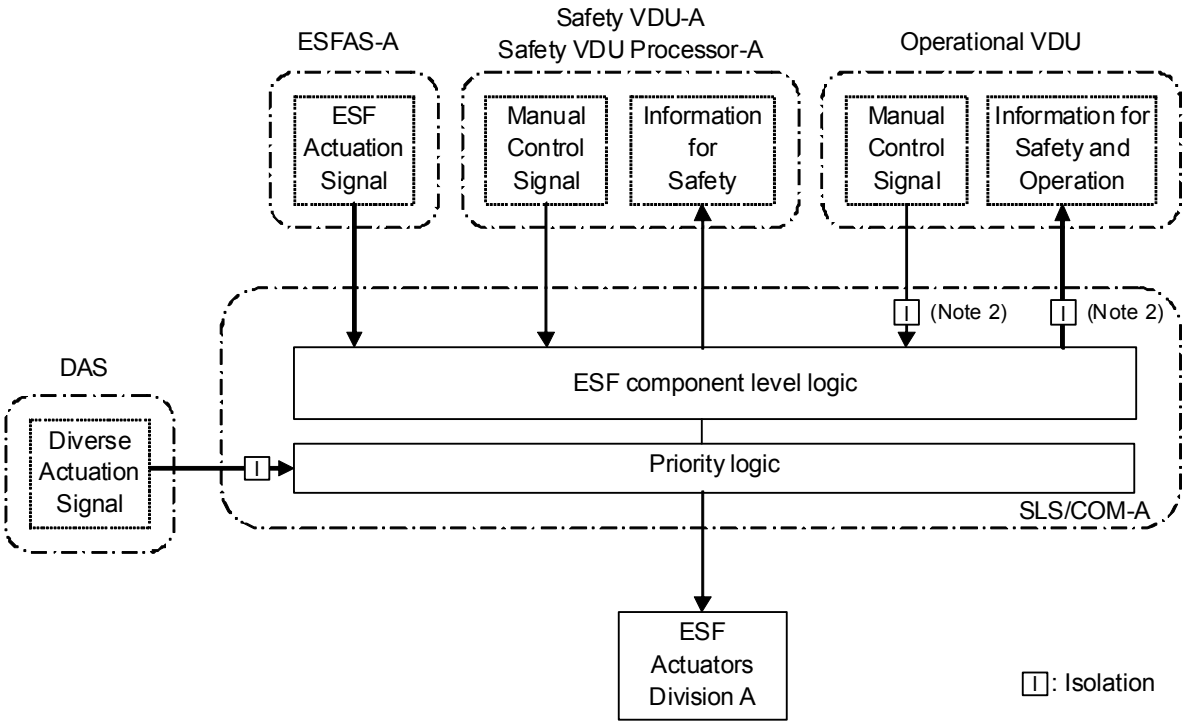

Note 1: Division A system is shown for the representative configuration.
Note 2: Isolation is performed in communication system.

Figure 2.5.1-3 Configuration of the Safety Grade Component Control System

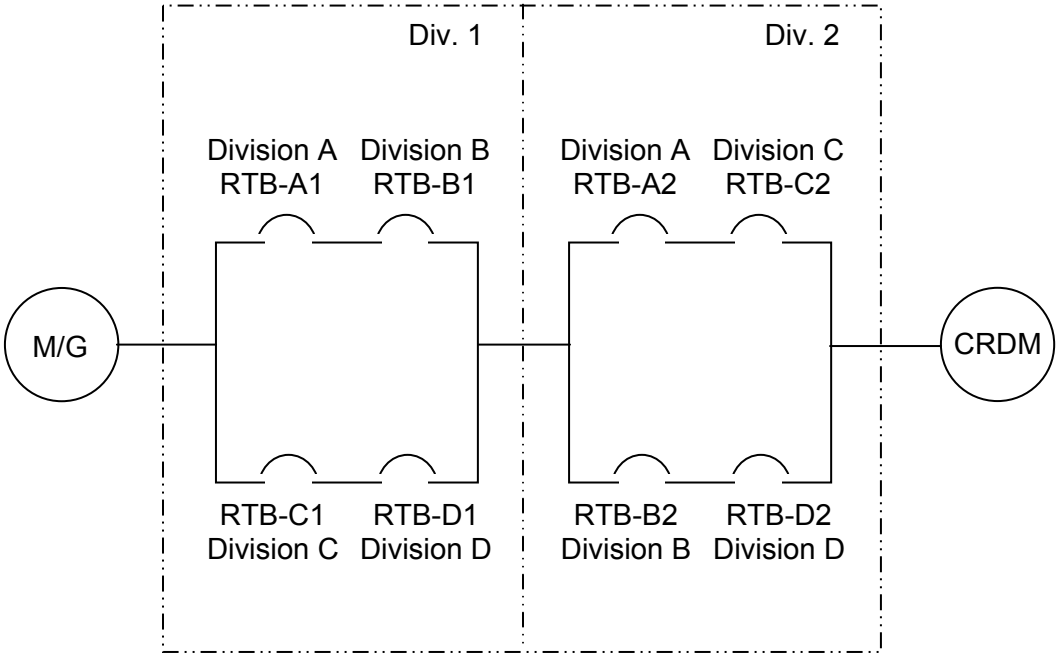

M/G: Motor-Generator Set

CRDM: Control Rod Drive Mechanism

Note: Div. 1 and Div. 2 show the separate fire area.

Figure 2.5.1-4 Configuration of the Reactor Trip Breakers

2.5.2 Systems Required for Safe Shutdown

2.5.2.1 Design Description

Safe shutdown can be achieved from the MCR or the remote shutdown room (RSR) using redundant safety-related instrumentation and control (I&C) systems of the PSMS, including the RPS, ESFAS, SLS and safety VDUs. The operational VDUs may also be used for monitoring safety-related instrumentation and manually controlling safety-related components. Normal shutdown can also be achieved from the MCR or RSR using non-safety instrumentation and non-safety component controls via the PCMS, including the operational VDUs, in addition to the above safety-related I&C systems.

There are no plant systems specifically and solely dedicated as safe shutdown or normal shutdown systems.

The systems required for safe shutdown perform two basic functions. First, they provide the necessary reactivity control to maintain the core in a sub-critical condition. Second, the systems provide the RHR capability to maintain adequate core cooling. A boration capability is provided to compensate for xenon decay and to maintain the required core shutdown margin.

Manual controls through the safety VDUs or the operational VDUs in the MCR or the RSR, allow operators to transition to and maintain hot standby, and transition to and maintain cold shutdown. If the MCR is uninhabitable, the same control and monitoring of the safe shutdown and the normal shutdown functions can be performed from the RSR.

1. The PSMS controls and monitors the systems required for the safe shutdown functions identified in Tables 2.5.2-1 and 2.5.2-2.

2.a The MCR/RSR transfer switches provide the capability to transfer PSMS controls between the MCR and the RSR. Separate transfer switches are provided for each of the four PSMS divisions.

2.b The MCR/RSR transfer switches provide the capability to transfer PCMS controls between the MCR and the RSR.

2.c Deleted.

3. Electrical isolation is provided between the MCR and the RSR.

4. The RSR and the MCR/RSR transfer switch cabinet outside the MCR can be locked to prevent unauthorized access. Alarms indicating access to the MCR/RSR transfer switch locations are provided in the MCR.

5. Redundant safety-related equipment of the safe shutdown systems identified in Tables 2.5.2-1 and 2.5.2-2, and the MCR/RSR transfer switches, are provided with a clear means of identification.

6. The functional arrangement of the SLS and HSIS for the safe shutdown systems is as described in the Design Description of Subsection 2.5.2.1 and as shown in Figure 2.5.2-1.

7. Upon manual reactor trip from the remote shutdown console (RSC), once initiated, the reactor trip and turbine trip functions continue until completion.

2.5.2.2 Inspections, Tests, Analyses, and Acceptance Criteria

Table 2.5.2-3 describes the ITAAC for the systems required for safe shutdown.

Table 2.5.2-1 Safe Shutdown Functions and Related Process Systems for Hot Standby

Trip the reactor which accomplishes the reactor shutdown condition (RT)
RCS heat removal by the following measures: - Main steam release to atmosphere (MSS) - Provide EFW to SGs (EFWS and MSS)
RCS pressure control (RCS)
Provide HVAC functions to the required areas (MCR HVAC, ESFVS, ECWS)
Utilize the emergency power source (EPS) for the above functions in the event of LOOP*[1]

Note1: Loss of Offsite Power

Table 2.5.2-2 Safe Shutdown Functions and Related Process Systems for Cold Shutdown

Remove heat from the RCS by the following measures: - Main steam release to atmosphere - Provide EFW to SGs (EFWS and MSS) - Operate RHRS
RCS pressure control (RCS)
Supply boric acid water to RCS (SIS)
Component cooling by operating CCW and ESW (CCWS and ESWS)
Provide HVAC functions to the required areas (MCR HVAC, ESFVS, ECWS)
Monitor neutron flux
Manually initiate appropriate ESF system(s) for shutdown operating bypasses (ECCS Actuation Signal Block, Main Steam Line Pressure signal Block)
Utilize the emergency power source (EPS) for the above functions in the event of LOOP

Table 2.5.2-3 Systems Required for Safe Shutdown Inspections, Tests, Analyses, and Acceptance Criteria (Sheet 1 of 2)

Design Commitment	Inspections, Tests, Analyses	Acceptance Criteria
1. The PSMS controls and monitors the systems required for the safe shutdown functions identified in Tables 2.5.2-1 and 2.5.2-2.	1. Inspections and tests of the as-built systems required for the safe shutdown functions identified in Tables 2.5.2-1 and 2.5.2-2, will be performed.	1. The as-built systems required for the safe shutdown functions identified in Tables 2.5.2-1 and 2.5.2-2, can be controlled and monitored by the as-built PSMS.
2.a The MCR/RSR transfer switches provide the capability to transfer PSMS controls between the MCR and the RSR. Separate transfer switches are provided for each of the four PSMS divisions.	2.a A test of the as-built PSMS transfer capability will be performed to demonstrate the disabling of the MCR controls and enabling of the RSR controls. This test can be conducted on a sample basis for at least one set of controls within each of the four PSMS divisions.	2.a The as-built MCR/RSR transfer switches transfer controls between the MCR and the RSR separately for each as-built PSMS safety division, as follows: 1. Controls at the RSR are disabled when controls are active in the MCR for each respective as-built PSMS division. 2. Controls at the MCR are disabled when controls are active in the RSR for each respective as-built PSMS division.
2.b The MCR/RSR transfer switches provide the capability to transfer PCMS controls between the MCR and the RSR.	2.b A test of the as-built PCMS transfer capability will be performed to demonstrate the disabling of the MCR controls and enabling of the RSR controls. This test can be conducted on a sample basis for at least one set of controls within each controller of the PCMS.	2.b The as-built MCR/RSR transfer switches transfer PCMS control between the MCR and the RSR as follows: 1. Controls at the RSR are disabled when controls are active in the MCR for each of the as-built controllers of the PCMS. 2. Controls at the MCR are disabled when controls are active in the RSR for each of the as-built controllers of the PCMS.
2.c Deleted.	2.c Deleted.	2.c Deleted.

Table 2.5.2-3 Systems Required for Safe Shutdown Inspections, Tests, Analyses, and Acceptance Criteria (Sheet 2 of 2)

Design Commitment	Inspections, Tests, Analyses	Acceptance Criteria
3. Electrical isolation is provided between the MCR and the RSR.	3. An inspection of the as-built PSMS will be performed.	3. The as-built PSMS provides interfaces from the I&C equipment rooms to the MCR and the RSR using fiber optic cable or qualified electrical isolation devices.
4. The RSR and the MCR/RSR transfer switch cabinet outside the MCR can be locked to prevent unauthorized access. Alarms indicating access to the MCR/RSR transfer switch locations are provided in the MCR.	4.i An inspection of the as-built MCR/RSR transfer switch locations to verify access control by keylock will be performed.	4.i The as-built RSR and the as-built MCR/RSR transfer switch cabinet outside the MCR can be locked to prevent unauthorized access.
	4.ii A test of the access alarms for the as-built RSR and MCR/RSR transfer switch cabinet outside the MCR will be performed.	4.ii Access to the as-built RSR and access to the as-built MCR/RSR transfer switch cabinet outside the MCR is alarmed in the as-built MCR.
5. Redundant safety-related equipment of the safe shutdown systems identified in Tables 2.5.2-1 and 2.5.2-2, and the MCR/RSR transfer switches, are provided with a clear means of identification.	5. Inspection of the as-built systems identified in Tables 2.5.2-1 and 2.5.2-2, and the MCR/RSR transfer switches, for conformance with color coding requirements will be performed.	5. The as-built equipment of the safe shutdown systems identified in Tables 2.5.2-1 and 2.5.2-2, and the MCR/RSR transfer switches, comply with the color coding requirements.
6. The functional arrangement of the SLS and HSIS for the safe shutdown systems is as described in the Design Description of Subsection 2.5.2.1 and as shown in Figure 2.5.2-1.	6. Inspection of the as-built SLS and HSIS for the safe shutdown systems will be performed.	6. The as-built SLS and HSIS for the safe shutdown systems conforms to the functional arrangement as described in the Design Description of Subsection 2.5.2.1 and as shown in Figure 2.5.2-1.
7. Upon manual reactor trip from the remote shutdown console (RSC), once initiated, the reactor trip and turbine trip functions continue until completion.	7. A test of the as-built RSC will be performed.	7. Upon manual reactor trip from the as-built RSC, once initiated, the reactor trip and turbine trip functions continue until completion.

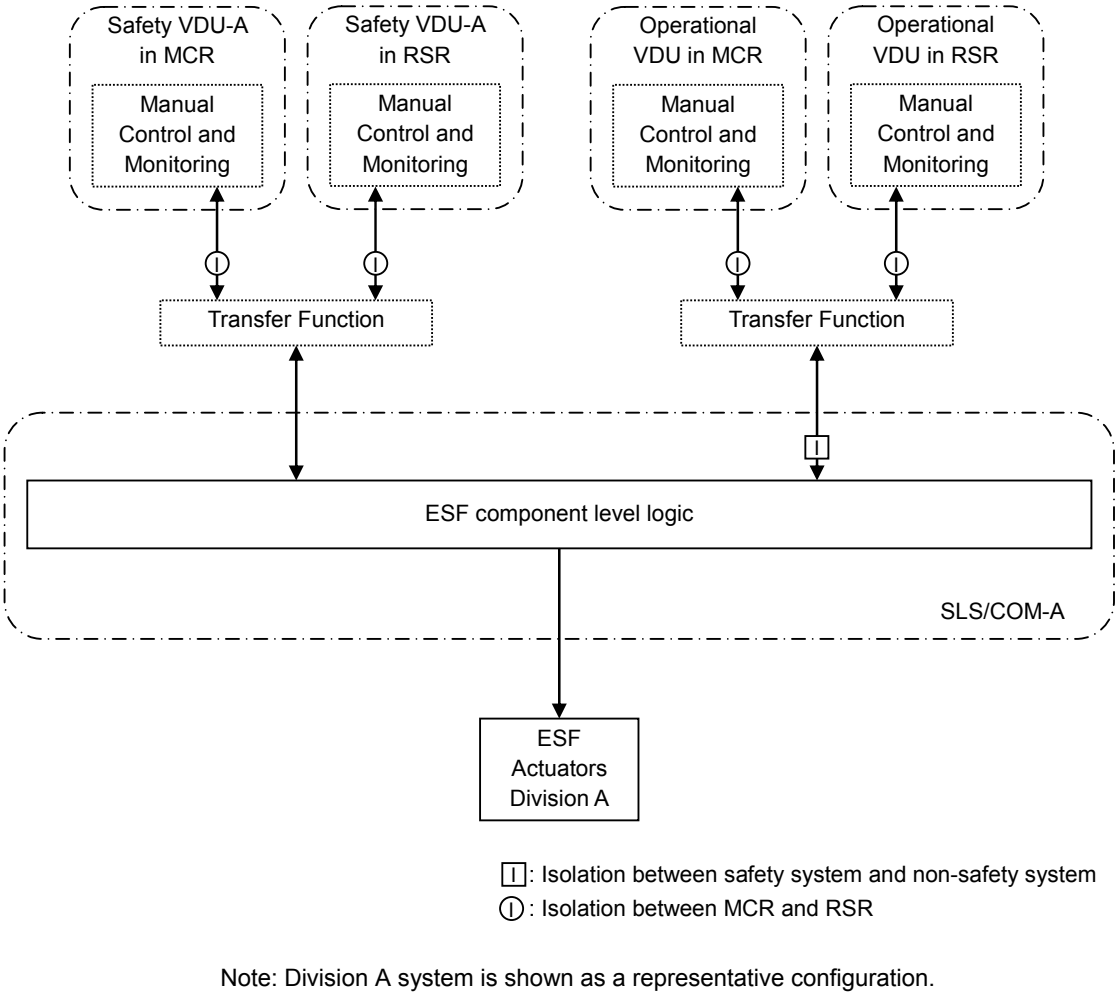

Note: Division A system is shown as a representative configuration.

Figure 2.5.2-1 Configuration of the SLS and HSIS for Safe Shutdown

2.5.3 Diverse Actuation System

2.5.3.1 Design Description

The DAS is a non-safety system that is diverse from the PSMS software and the digital platform of the PSMS. Therefore, a software or digital platform common cause failure (CCF) in the digital safety and non-safety systems (PSMS and PCMS), would not affect the DAS. The DAS provides monitoring, control and actuation capability of safety and the non-safety systems required to mitigate the AOOs and the PAs, concurrent with a CCF that could disable the functions of the PSMS and the PCMS.

The DAS consists of two subsystems. Each subsystem includes a diverse automatic actuation cabinet (DAAC) located in separate rooms. A diverse HSI panel (DHP) located in the MCR includes HSI components for both DAS subsystems. A manual actuation permissive switch located in the MCR, but physically separated from the DHP, is required for the manual actuations identified in Tables 2.5.3-2 and 2.5.3-3.

1.a The functional arrangement of the DAS is as described in the Design Description of Subsection 2.5.3.1 and as shown in Figure 2.5.3-1. Variables monitored by the DAS are as indicated in Table 2.5.3-1.

1.b The DAS is physically separated and electrically independent from the PSMS.

1.c DAS controls are provided in the MCR to manually actuate equipment identified in Table 2.5.3-2, and to manually actuate functions identified in Table 2.5.3-3.

1.d The DAS provides automatic actuation of the equipment and for the functions identified in Tables 2.5.3-2 and 2.5.3-3, respectively, when the monitored variables identified in Table 2.5.3-1 exceed predetermined limits.

1.e The DAS prevents spurious actuation due to single failures or due to a fire or seismic event. Spurious actuations are prevented by the DAS as follows:

- Automatic DAS functions are actuated by two subsystems and DAS actuation needs coincidence of both subsystems.
- The DAS prevents spurious actuation due to a seismic event. Thus the SSE will not result in a DAS failure that adversely affects the PSMS.
- The redundant DAS cabinets are located in separate fire areas to prevent spurious actuation from a fire in one area.
- Manual DAS functions identified in Tables 2.5.3-2 and 2.5.3-3 require actuation of two switches in the MCR. Separation between the permissive switch and the DHP prevents a fire in one switch location from affecting the other switch location.

2. The DAS has the following capabilities:

- Operates with both DAAC subsystems operable (i.e., in a two-out-of-two configuration), or with one subsystem manually tripped and one subsystem operable.
- The system can be tested manually without causing component actuation.
- Loss of power or removal of a module does not cause spurious DAS actuation.
- Capability to bypass failed sensors functions.

3. The DAS equipment, including input and output interfaces, signal processing and HSI, consists of conventional hardware circuits (analog circuits, solid-state logic processing, relay circuits, switches, indicators).

4. The DAS equipment used for the anticipated transient without scram (ATWS) mitigation (i.e., reactor trip, turbine trip and emergency feedwater actuation) is diverse from the hardware used for the reactor trip function of the PSMS. This design commitment does not apply to measurement instrumentation and signal splitters, which distribute measurement signals to the DAS and the PSMS.

5. Deleted.

2.5.3.2 Inspections, Tests, Analyses, and Acceptance Criteria

Table 2.5.3-4 describes the ITAAC for the DAS.

Table 2.5.3-1 Variables Monitored by DAS

Critical Safety Function	Variables
Reactivity Control	Wide Range Neutron Flux
RCS Integrity	Pressurizer Pressure
	Reactor Coolant Pressure
Core Heat Removal	Reactor Coolant Cold Leg Temperature
RCS Inventory Control	Pressurizer Water Level
Secondary Heat Sink	Steam Generator Water Level
	Main Steam Line Pressure
Containment Integrity	Containment Pressure

Table 2.5.3-2 Equipment Actuated by DAS

Safety Function/Associated Components	Actuation Type
Diverse Reactor Trip (M/G set trip)	Automatic/Manual (MCR)
Turbine Trip	Automatic/Manual (MCR)
Emergency Feedwater Pump	Automatic/Manual (MCR)
Safety Injection Pump	Manual (MCR)
Safety Depressurization Valve	Manual (MCR)
Main Steam Depressurization Valve	Manual (MCR)
Steam Generator Blowdown Isolation Valve	Automatic/Manual (MCR)
Main Feedwater Regulation Valve	Automatic/Manual (MCR)
Emergency Feedwater Control Valve	Manual (MCR)
Containment Isolation Valves	Manual (MCR)

Table 2.5.3-3 DAS Functions and Actuation Signals

DAS Function	Actuation Signal
Reactor Trip, Turbine Trip and Main Feedwater Isolation	Low Pressurizer Pressure
	High Pressurizer Pressure
	Low Steam Generator Water Level
	Manual Switch Signal
Emergency Feedwater Actuation	Low Steam Generator Water Level
	Manual Switch Signal
ECCS Actuation	Manual Switch Signal
Containment Isolation	Manual Switch Signal

Table 2.5.3-4 Diverse Actuation System Inspections, Tests, Analyses, and Acceptance Criteria (Sheet 1 of 4)

Design Commitment	Inspections, Tests, Analyses	Acceptance Criteria
1.a The functional arrangement of the DAS is as described in the Design Description of Subsection 2.5.3.1 and as shown in Figure 2.5.3-1. Variables monitored by the DAS are as indicated in Table 2.5.3-1.	1.a Inspection of the as-built DAS will be performed.	1.a The as-built DAS conforms to the functional arrangement as described in the Design Description of Subsection 2.5.3.1 and as shown in Figure 2.5.3-1. Variables monitored by the DAS are as indicated in Table 2.5.3-1.
1.b The DAS is physically separated and electrically independent from the PSMS.	1.b.i An inspection of the as-built DAS will be performed for physical separation of the DAS from the as-built PSMS.	1.b.i Physical separation of the as-built DAS from the as-built PSMS is provided by locating the as-built DAAC in separate rooms, and locating the as-built DHP in the MCR.
	1.b.ii Analyses, tests or a combination of analyses and tests of the as-built DAS will be performed to verify its electrical independence from the as-built PSMS.	1.b.ii A report exists and concludes that electrical independence of the as-built DAS from the as-built PSMS is achieved by using independent power sources for the as-built DAAC and the as-built DHP, and by using qualified electrical fault isolation devices.
1.c DAS controls are provided in the MCR to manually actuate equipment identified in Table 2.5.3-2, and to manually actuate functions identified in Table 2.5.3-3.	1.c Tests will be performed to verify the as-built equipment listed in Table 2.5.3-2 can be operated, and to verify the manual actuation functions in Table 2.5.3-3, using as-built DAS manual controls in the as-built MCR.	1.c As-built DAS controls in the as-built MCR operate the as-built equipment listed in Table 2.5.3-2, and provide manual actuation capability for the actuation functions identified in Table 2.5.3-3.

Table 2.5.3-4 Diverse Actuation System Inspections, Tests, Analyses, and Acceptance Criteria (Sheet 2 of 4)

Design Commitment	Inspections, Tests, Analyses	Acceptance Criteria
1.d The DAS provides automatic actuation of the equipment and for the functions identified in Tables 2.5.3-2 and 2.5.3-3, respectively, when the monitored variables identified in Table 2.5.3-1 exceed predetermined limits.	1.d Tests will be performed to verify DAS automatic actuation capability for the as-built equipment listed in Table 2.5.3-2, and to verify the automatic actuation functions in Table 2.5.3-3, using simulated signals.	1.d The DAS provides automatic actuation of the equipment identified in Table 2.5.3-2, and automatic actuation for the functions identified in Table 2.5.3-3, when the monitored variables identified in Table 2.5.3-1 exceed predetermined limits.
1.e The DAS prevents spurious actuation due to single failures or due to a fire or seismic event. Spurious actuations are prevented by the DAS as follows: • Automatic DAS functions are actuated by two subsystems and DAS actuation needs coincidence of both subsystems. • The DAS prevents spurious actuation due to a seismic event. Thus the SSE will not result in a DAS failure that adversely affects the PSMS. • The redundant DAS cabinets are located in separate fire areas to prevent spurious actuation from a fire in one area. • Manual DAS functions identified in Tables 2.5.3-2 and 2.5.3-3 require actuation of two switches in the MCR. Separation between the permissive switch and the DHP prevents a fire from one switch location from affecting the other switch location.	1.e.i Test and analysis will be performed to verify the as-built DAS prevents spurious actuation due to single failures or due to a seismic event.	1.e.i A report exists and concludes that the as-built DAS prevents spurious actuation due to single failures or due to a seismic event as follows. • Automatic DAS functions are actuated by two as-built subsystems and DAS actuation needs coincidence of both subsystems. • The as-built DAS prevents spurious actuation due to a seismic event.

Table 2.5.3-4 Diverse Actuation System Inspections, Tests, Analyses, and Acceptance Criteria (Sheet 3 of 4)

Design Commitment	Inspections, Tests, Analyses	Acceptance Criteria
	1.e.ii Test and inspection of the as-built DAS will be performed to verify the existence of a manual permissive switch, to verify the DAS permissive switch is physically located separate from the DHP, and to verify physical separation of redundant DACC cabinets.	1.e.ii The as-built DAS: • Redundant DAAC cabinets are located in separate equipment rooms. • Includes a manual permissive switch that prevents spurious manual actuation for those signals with only one manual actuation switch, as identified in Table 2.5.3-3. • The manual permissive switch is physically separated from the DHP to prevent a fire that starts in one switch location from affecting the other switch location.
2. The DAS has the following capabilities: • Operates with both DAAC subsystems operable (i.e., in a two-out-of-two configuration), or with one subsystem manually tripped and one subsystem operable. • The system can be tested manually without causing component actuation. • Loss of power or removal of a module does not cause spurious DAS actuation. • Capability to bypass failed sensors functions.	2. Tests of the as-built DAS will be performed. The tests will include tests of the manual controls, loss of power, and module removal, as well as simulated signal inputs to test the system.	2. A report exists and concludes that the as-built DAS has the following capabilities: • Operates with both as-built DAAC subsystems operable (i.e., in a two-out-of-two configuration), or with one subsystems manually tripped and one subsystems operable. • The system can be tested manually without causing component actuation. • Loss of power or removal of a module does not cause spurious DAS actuation. • Capability to bypass failed sensors functions.

Table 2.5.3-4 Diverse Actuation System Inspections, Tests, Analyses, and Acceptance Criteria (Sheet 4 of 4)

Design Commitment	Inspections, Tests, Analyses	Acceptance Criteria
3. The DAS equipment, including input and output interfaces, signal processing and HSI, consists of conventional hardware circuits (analog circuits, solid-state logic processing, relay circuits, switches, indicators).	3. Inspection of the as-built DAS will be performed.	3. The as-built DAS equipment consists of conventional hardware circuits (analog circuits, solid-state logic processing, relay circuits, switches, indicators).
4. The DAS equipment used for the anticipated transient without scram (ATWS) mitigation (i.e., reactor trip, turbine trip and emergency feedwater actuation) is diverse from the hardware used for the reactor trip function of the PSMS. This design commitment does not apply to measurement instrumentation and signal splitters, which distribute measurement signals to the DAS and the PSMS.	4. Inspection of the as-built DAS and RT system hardware within the as-built PSMS will be performed.	4. The as-built DAS equipment used for the ATWS mitigation (i.e., reactor trip, turbine trip and emergency feedwater actuation) is diverse from the hardware used for the reactor trip function of the as-built PSMS.
5. Deleted.	5. Deleted.	5. Deleted.

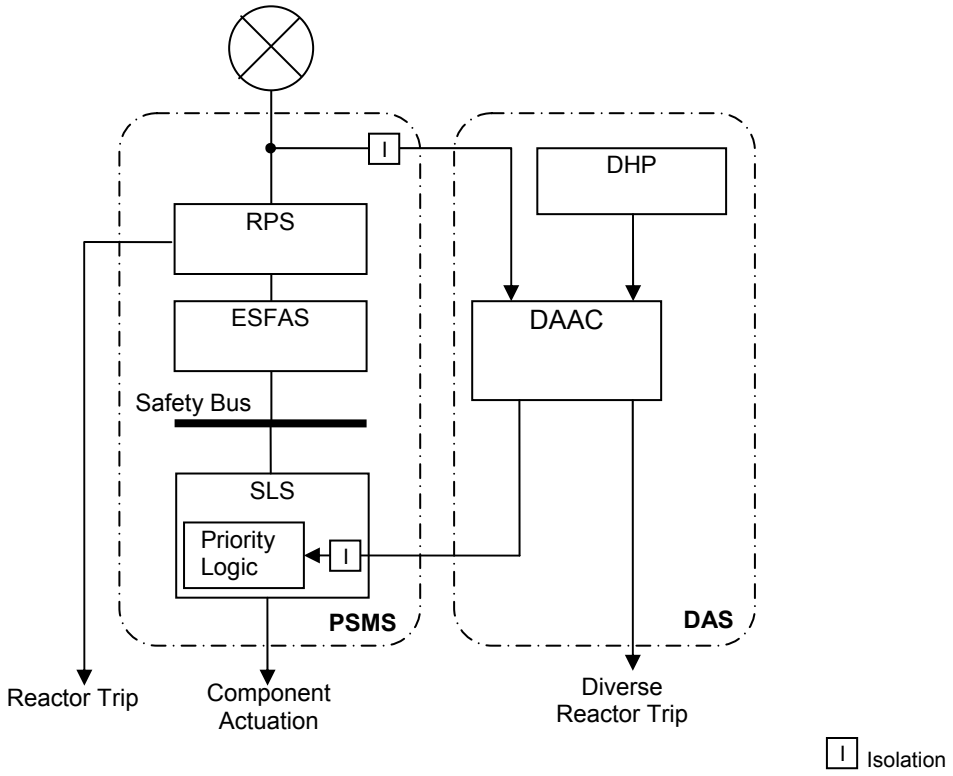

Figure 2.5.3-1 DAS Configuration

2.5.4 Information Systems Important to Safety

2.5.4.1 Design Description

The PSMS and PCMS provide plant operators with the information systems important to safety for: (1) assessing plant conditions and safety system performance, and making decisions related to plant responses to abnormal events; and (2) preplanned manual operator actions related to accident mitigation. The information systems important to safety also provide the necessary information from which appropriate actions can be taken to mitigate the consequences of the AOOs.

The information important to safety includes the following:

- Post accident monitoring (PAM)
- Bypassed and inoperable status indication (BISI)
- Plant annunciators (alarms)
- Safety parameter displays system (SPDS)

The PAM variables are identified in Table 2.5.4-1, and the alarms for the credited manual operator actions are identified in Table 2.5.4-3.

1. PAM variables as identified in Table 2.5.4-1, BISI, SPDS information, and plant alarms for credited manual operator actions as identified in Table 2.5.4-3, for information systems important to safety, are provided on safety and non-safety HSI equipment at the MCR, RSR, and TSC, as shown in Figure 2.5.4-1.

2. Deleted.

3. The field instrumentation for the PAM variables identified in Table 2.5.4-1 that is subjected to a harsh environment can withstand the environmental conditions that would exist before, during, and following a design basis accident without loss of safety function for the time required to perform the safety function.

4. Deleted.

2.5.4.2 Inspections, Tests, Analyses, and Acceptance Criteria

Table 2.5.4-2 describes the ITAAC for the information systems important to safety.

Table 2.5.4-1 Post Accident Monitoring Variables

Reactor Coolant Hot Leg Temperature (Wide Range)
Reactor Coolant Cold Leg Temperature (Wide Range)
Reactor Coolant Pressure
Degrees of Subcooling
Pressurizer Water Level
Steam Generator Water Level (Wide Range)
Steam Generator Water Level (Narrow Range)
Main Steam Line Pressure
Emergency Feedwater Flow
Wide Range Neutron Flux
Core Exit Temperature
Containment Pressure
Reactor Vessel Water Level
Containment Isolation Valve Position (Excluding Check Valves)
Refueling Water Storage Pit Water Level (Wide Range)
Refueling Water Storage Pit Water Level (Narrow Range)
Emergency Feedwater Pit Water Level
Containment High Range Area Radiation

Table 2.5.4-2 Information Systems Important to Safety Inspections, Tests, Analyses, and Acceptance Criteria (Sheet 1 of 2)

Design Commitment	Inspections, Tests, Analyses	Acceptance Criteria
1. PAM variables as identified in Table 2.5.4-1, BISI, SPDS information, and plant alarms for credited manual operator actions as identified in Table 2.5.4-3, for information systems important to safety, are provided on safety and non-safety HSI equipment at the MCR, RSR, and TSC, as shown in Figure 2.5.4-1.	1. An inspection will be performed of the MCR, RSR, and TSC for retrievability of alarms and displays for information systems important to safety.	1. Displays for PAM variables identified in Table 2.5.4-1, BISI, SPDS, and plant alarms for credited manual operator actions as identified in Table 2.5.4-3, for information systems important to safety, can be retrieved on non-safety HSI equipment in the as-built MCR, RSR, and TSC, as shown in Figure 2.5.4-1. Displays for PAM variables as identified in Table 2.5.4-1 and alarms for credited manual actions as identified in Table 2.5.4-3, for information systems important to safety, can be retrieved on safety HSI equipment in the as-built MCR and RSR, as shown in Figure 2.5.4-1.
2. Deleted.	2. Deleted.	2. Deleted.
3. The field instrumentation for the PAM variables identified in Table 2.5.4-1 that is subjected to a harsh environment can withstand the environmental conditions that would exist before, during, and following a design basis accident without loss of safety function for the time required to perform the safety function.	3.i Type tests or a combination of type tests and analyses using the design environmental conditions, or under the conditions which bound the design environmental conditions, will be performed on the field instrumentation for the PAM variables identified in Table 2.5.4-1 that is subjected to a harsh environment.	3.i A report exists and concludes that the field instrumentation for the PAM variables identified in Table 2.5.4-1 that is subjected to a harsh environment can withstand the environmental conditions that would exist before, during, and following a design basis accident without loss of safety function for the time required to perform the safety function.
	3.ii Inspection will be performed of the as-built field instrumentation for the PAM variables identified in Table 2.5.4-1 that is subjected to a harsh environment, and the associated wiring, cables, and terminations located in a harsh environment.	3.ii The as-built field instrumentation and the associated wiring, cables, and terminations for the PAM variables identified in Table 2.5.4-1 that are subjected to a harsh environment are bounded by type tests or a combination of type tests and analyses.

Table 2.5.4-2 Information Systems Important to Safety Inspections, Tests, Analyses, and Acceptance Criteria (Sheet 2 of 2)

Design Commitment	Inspections, Tests, Analyses	Acceptance Criteria
4. Deleted.	4. Deleted.	4. Deleted.

Table 2.5.4-3 Alarms for Credited Manual Operator Actions

Control Rod Insertion Limit Alarm
High Source Range Neutron Flux Alarm
High Pressurizer Water Level Alarm
Main Steam Line Radiation (N-16) Alarm
Low Pressurizer Water Level against Program Water Level Alarm
Containment High Range Area Radiation Alarm
Low Volume Control Tank Water Level Alarm

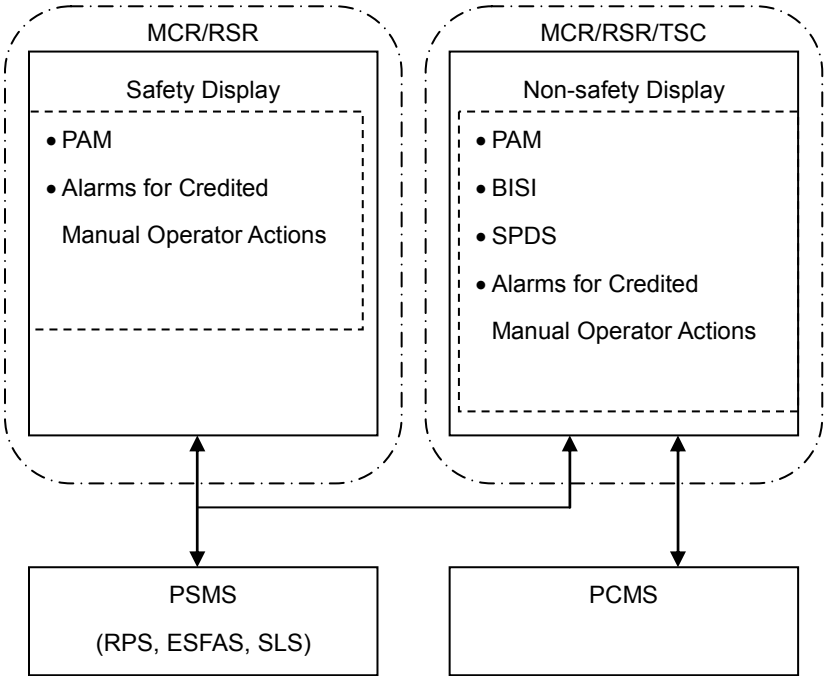

Note: Controls for credited manual operator actions are available in the MCR.

Figure 2.5.4-1 Configuration of the PSMS and PCMS for Information Systems Important to Safety

2.5.5 Control Systems Not Required for Safety

2.5.5.1 Design Description

The non-safety PCMS provides for automatic and manual control of non safety-related plant components, and monitoring of non safety-related plant instrumentation. The operational VDUs which are part of the PCMS, provide monitoring and control for safety-related plant components and instrumentation, including monitoring and control for the credited manual operator actions. The PCMS regulates conditions in the plant automatically in response to changing plant processes and load demand to establish and maintain plant operating conditions within prescribed limits. The PCMS controls and monitors neutron flux, temperature, pressure, liquid level, flow and other process parameters throughout the plant.

The PCMS is fully redundant to ensure single malfunctions do not result in loss of any control, monitoring or alarm functions. The PCMS is powered from two nonsafety-related UPSs to ensure reliability.

1. The functional arrangement of the PCMS is as described in the Design Description of Subsection 2.5.5.1 and in Table 2.5.5-2.

2. Deleted.

3. Deleted.

4. For a control command to be generated from the PCMS Operational VDUs for safety related components, two distinct operator actions, at a minimum, are required.

2.5.5.2 Inspections, Tests, Analyses, and Acceptance Criteria

Table 2.5.5-1 describes the ITAAC for the control systems not required for safety.

Table 2.5.5-1 Control Systems Not Required for Safety Inspections, Tests, Analyses, and Acceptance Criteria

Design Commitment	Inspections, Tests, Analyses	Acceptance Criteria
1. The functional arrangement of the PCMS is as described in the Design Description of Subsection 2.5.5.1 and in Table 2.5.5-2.	1. Inspection of the as-built PCMS will be performed.	1. The as-built PCMS conforms to the functional arrangement as described in the Design Description of Subsection 2.5.5.1 and in Table 2.5.5-2.
2. Deleted.	2. Deleted.	2. Deleted.
3. Deleted.	3. Deleted.	3. Deleted.
4. For a control command to be generated from the PCMS Operational VDUs for safety-related components, two distinct operator actions, at a minimum, are required.	4. Type test of the PCMS will be performed for each type of soft control command.	4. A minimum of two distinct operator actions are required to generate safety-related component control commands from a PCMS Operational VDU.

Table 2.5.5-2 Arrangement of Control Systems Not Required for Safety

PCMS (CONTROL) FUNCTION GROUP	DESCRIPTION
REACTOR CONTROL SYSTEM GROUP 1	A-SG FEEDWATER CONTROL
	A-MAIN STEAM RELIEF VALVE CONTROL
REACTOR CONTROL SYSTEM GROUP 2	B-SG FEEDWATER CONTROL
	B-MAIN STEAM RELIEF VALVE CONTROL
	PRESSURIZER PRESSURE CONTROL
REACTOR CONTROL SYSTEM GROUP 3	C-SG FEEDWATER CONTROL
	C-MAIN STEAM RELIEF VALVE CONTROL
	PRESSURIZER WATER LEVEL CONTROL
	CONTROL ROD INSERTION MONITORING
REACTOR CONTROL SYSTEM GROUP 4	D-SG FEEDWATER CONTROL
	D-MAIN STEAM RELIEF VALVE CONTROL
REACTOR CONTROL SYSTEM GROUP 5	TURBINE BYPASS CONTROL
	REACTOR MAKEUP CONTROL
REACTOR CONTROL SYSTEM GROUP 6	CONTROL ROD CONTROL
TURBINE PROTECTION SYSTEM	TURBINE PROTECTION CONTROL
BOP CONTROL SYSTEM	BALANCE OF PLANT CONTROL
	AUXILIARY EQUIPMENT CONTROL
TURBINE EHG CONTROL SYSTEM	TURBINE ELECTRICAL-HYDRAULIC GOVERNOR CONTROL
ELECTRICAL CONTROL SYSTEM	ELECTRICAL SYSTEM CONTROL

2.5.6 Data Communication Systems

2.5.6.1 Design Description

The data communication systems (DCS) consist of:

- Plant-wide unit bus
- Safety bus (for each PSMS division)
- Data links for point-to-point communication
- Input/Output (I/O) bus
- Maintenance network for each PSMS division and the PCMS

The DCS is a distributed and highly interconnected system, which has communication independence to prevent electrical and communication processing faults in one safety division (or the non-safety PCMS) from adversely affecting the performance of safety functions in other divisions. Qualified fiber-optic isolators are used to prevent electrical faults from transferring between divisions, and between safety and non-safety systems. Communication faults are prevented through data integrity verification.

A non-redundant non-safety multi-drop maintenance network is provided separately within each PSMS division and within the PCMS. The maintenance network is used to transmit signals between the engineering tools and the PSMS or PCMS system management module of each controller.

1. The functional arrangement of the DCS is as described in the Design Description of Subsection 2.5.6.1 and as shown in Figure 2.5.6-1.

2. The DCS provides throughput to meet the response time requirements for all safety functions under the full range of applicable conditions enumerated in the design basis. On-line diagnostics do not interrupt plant control.

3. The DCS provides external networks with a communications link via the unit management computer (UMC) which is connected to the unit bus. The UMC provides a firewalled interface, which allows only outbound communication from the unit bus to external networks. There are no other connections from external sources to the DCS.

4. The safety-related portions of the DCS are located in a facility area that provides protection from natural phenomena hazards such as tornadoes, and accident related hazards such as missiles, pipe breaks and flooding.

5. The PSMS application setpoints, constants and application software are changeable only by removing the CPU module that contains the memory devices from the controller and placing it in a dedicated re-programming chassis.

6. Digital communication independence is achieved by communication processors that are independent of RT and ESF actuation processing functions of the redundant divisions of the PSMS, and also between non-safety systems and the PSMS.

2.5.6.2 Inspections, Tests, Analyses, and Acceptance Criteria

Table 2.5.6-1 describes the ITAAC for the DCS.

Table 2.5.6-1 Data Communication Systems Inspections, Tests, Analyses, and Acceptance Criteria (Sheet 1 of 2)

Design Commitment	Inspections, Tests, Analyses	Acceptance Criteria
1. The functional arrangement of the DCS is as described in the Design Description of Subsection 2.5.6.1 and as shown in Figure 2.5.6-1.	1. Inspection of the as-built DCS will be performed.	1. The as-built DCS conforms to the functional arrangement as described in the Design Description of Subsection 2.5.6.1 and as shown in Figure 2.5.6-1.
2. The DCS provides throughput to meet the response time requirements for all safety functions under the full range of applicable conditions enumerated in the design basis. On-line diagnostics do not interrupt plant control.	2. Type tests, analyses or a combination of type tests and analyses of the DCS will be performed.	2. A report exists and concludes that the DCS provides throughput to meet the response time requirements for all safety functions under the full range of applicable conditions enumerated in the design basis, and that on-line diagnostics do not interrupt plant control.
3. The DCS provides external networks with a communications link via the unit management computer (UMC) which is connected to the unit bus. The UMC provides a firewalled interface, which allows only outbound communication from the unit bus to external networks. There are no other connections from external sources to the DCS.	3. Inspection and analyses of the as-built DCS will be performed.	3 A report exists and concludes that: (1) the as-built DCS provides external networks with a communications link via the as-built unit management computer (UMC), which is connected to the as-built unit bus; (2) the as-built UMC provides a firewalled interface, which allows only outbound communication from the as-built unit bus to external networks; and (3) there are no other connections from external sources to the as-built DCS.
4. The safety-related portions of the DCS are located in a facility area that provides protection from natural phenomena hazards such as tornadoes, and accident related hazards such as missiles, pipe breaks and flooding.	4. An inspection of the as-built equipment location will be performed.	4. The safety- related portions of the as-built DCS are located in an as-built facility area that provides protection from natural phenomena hazards such as tornadoes, and accident related hazards such as missiles, pipe breaks and flooding.

Table 2.5.6-1 Data Communication Systems Inspections, Tests, Analyses, and Acceptance Criteria (Sheet 2 of 2)

Design Commitment	Inspections, Tests, Analyses	Acceptance Criteria
5. The PSMS application setpoints, constants and application software are changeable only by removing the CPU module that contains the memory devices from the controller and placing it in a dedicated re-programming chassis.	5. Type tests of the PSMS changeability will be performed.	5. The PSMS application setpoints, constants and application software are changeable only by removing the CPU module that contains the memory devices from the controller and placing it in a dedicated re-programming chassis.
6. Digital communication independence is achieved by communication processors that are independent of RT and ESF actuation processing functions of the redundant divisions of the PSMS, and also between non-safety systems and the PSMS.	6.i An inspection of the as-built PSMS will be performed to verify communication processors are installed.	6.i Communication processors exist in the as-built PSMS for digital communication between redundant divisions of the PSMS and between non-safety systems and the PSMS.
	6.ii Type tests or analyses, or a combination of type tests and analyses of the digital communication independence will be performed.	6.ii A report exists and concludes that digital communication independence is achieved by communication processors that are independent of trip and actuation processing functions.

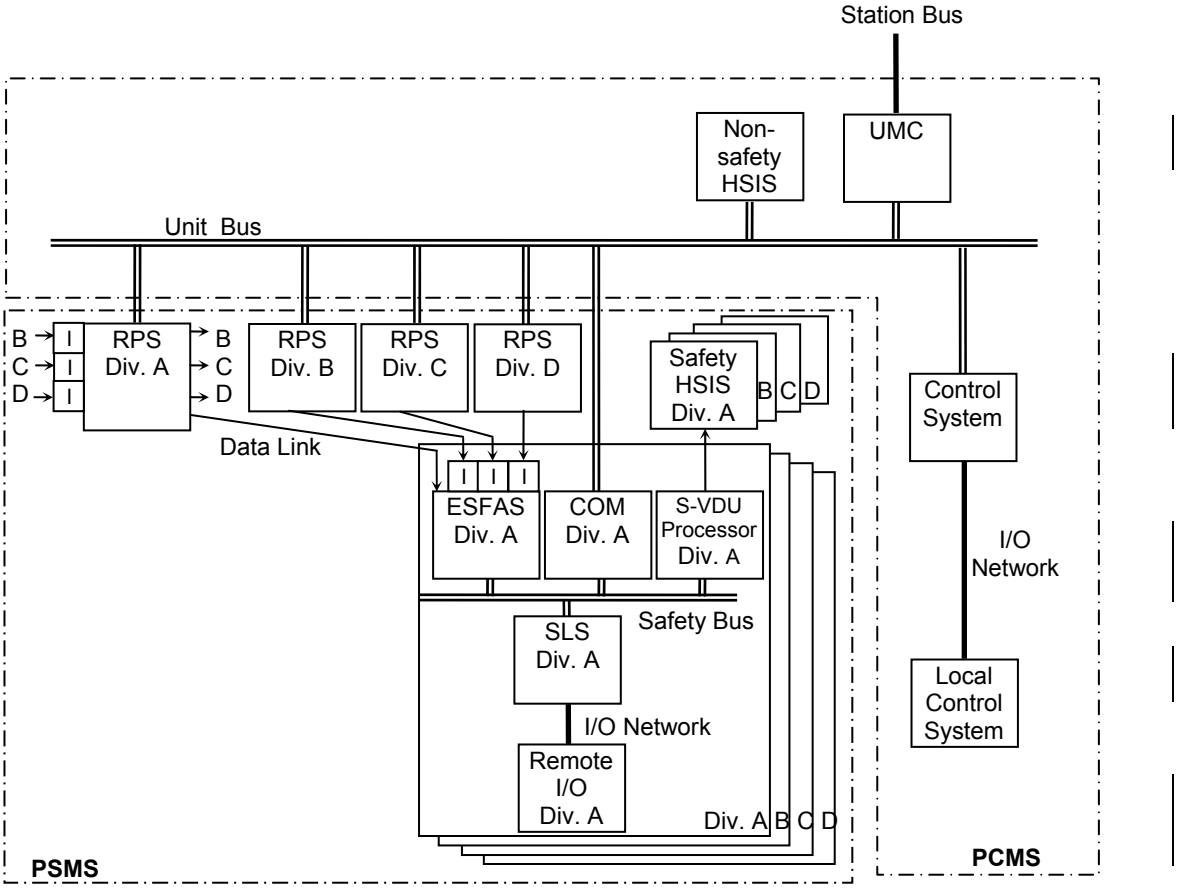

Figure 2.5.6-1 DCS Configuration

2.6 ELECTRICAL SYSTEMS

This section describes the US-APWR electrical systems, with emphasis on the onsite power system.

The onsite power system is comprised of the alternating current (ac) electric power system and the direct current (dc) electric power system, each of which is comprised of a safety-related Class 1E power system and a non safety-related non-Class 1E power system. The purpose and function of the onsite power system is to provide power to the plant auxiliary and service loads during all modes of plant operation, including safe shutdown and accident conditions.

This section addresses the following major systems and equipment, and their key subsystems:

- AC electric power system
- DC electric power system
- Instrumentation and control (I&C) power supply system
- Emergency power sources (EPSs)
- Alternate ac (AAC) power sources
- Plant lighting systems
- Grounding and lightning protection system
- Electrical penetration assemblies

This section also provides ITAAC for each major system and safety-related support system.

The US-APWR electric systems as described herein are entirely within the scope of the certified design unless specifically indicated otherwise.

2.6.1 AC Electric Power Systems

2.6.1.1 Design Description

The ac electric power system includes the following system and components: offsite transmission system, plant switchyard, main transformer (MT), main generator (MG), generator load break switch (GLBS), unit auxiliary transformers (UATs), reserve auxiliary transformers (RATs), station service transformers (SSTs), switchgear, load centers, motor control centers (MCCs), panel boards, and cables for power, control and instrumentation. The 6.9kV buses of the onsite Class 1E ac electric power systems are supplied from offsite sources through the UATs, RATs or from onsite EPSs. Normal preferred supply to the Class 1E 6.9kV buses is through the RATs. During SBO, these buses can be powered from onsite AAC power sources. Class 1E ac power systems

have four independent redundant divisions, A, B, C and D, corresponding to four divisions of safety-related load groups except for systems containing two 100% redundant load groups. The two 100% load groups are powered from divisions A and D distribution systems identified as A1 and D1. The A1 buses can be powered from A or B division power sources, and D1 buses can be powered from D or C division power sources.

1. The functional arrangement of the ac electrical power systems is as described in the Design Description of Subsection 2.6.1.1 and as shown in Figure 2.6.1-1.

2. Independence is provided between each division of the four divisions of the Class 1E distribution equipment and circuits, and between Class 1E distribution equipment and circuits and non-Class 1E distribution equipment and circuits.

3. Independence between Class 1E electric power distribution equipment and non-Class 1E loads is provided by Class 1E qualified isolation devices.

4. Class 1E electric power distribution equipment of redundant divisions, identified in Table 2.6.1-1, is located in separate rooms in the reactor building.

5. Each Class 1E EPS is located in a separate room in the power source buildings.

6.a The seismic Category I Class 1E ac electrical power system equipment, identified in Table 2.6.1-1, can withstand seismic design basis loads without loss of safety function.

6.b If power through the RATs is not available, each Class 1E medium voltage bus is automatically transferred to the UATs, if available.

6.c If both offsite power sources are not available, each Class 1E medium voltage bus automatically connects to its respective EPS.

7. For all plant trip conditions, except for a trip due to electrical fault in the MT, MG, GLBS, UATs or associated equipment and circuits, the GLBS opens.

8. For electrical faults in the MT, MG, GLBS, UATs and associated equipment and circuits, the MT circuit breaker at the switchyard opens.

9. Deleted

10. The UATs and RATs power sources are sized for worst case loading conditions for all modes of plant operation and accident conditions.

11.a The Class 1E distribution equipment and circuits are sized to carry the worst case load currents, to withstand the maximum fault currents, and to provide minimum design basis voltage at load terminals to support accomplishment of their safety functions.

11.b The Class 1E cables are sized considering derating due to ambient temperature and raceway loading.

12. The interrupting ratings of the Class 1E circuit breakers and fuses are adequate for maximum available fault currents.

13. The MT, UATs, and RATs have their own fire deluge system, oil pit and drain system.

14. The UATs power feeders are separated from RATs power feeders.

15. The MT and GLBS power feeders are separated from the RATs power feeders.

16. The dc control power for Class 1E switchgear and load centers of each division is supplied from the same division of the dc system.

17. Equipment and circuits of each Class 1E division are uniquely identified.

18. The Class 1E equipment is protected from sustained degraded voltage conditions.

19. There is no provision for automatic connection between redundant Class 1E buses.

20.a Displays of voltage and current of the Class 1E medium voltage buses are provided in the MCR.

20.b Controls are provided in the MCR and locally to open and close the Class 1E 6.9kV switchgear and 480V load center buses incoming circuit breakers identified in Table 2.6.1-2.

20.c Displays of the Class 1E 6.9kV switchgear and 480V load center buses incoming circuit breakers listed in Table 2.6.1-2 are provided in the MCR.

21. Class 1E ac electric distribution system overcurrent protection is set for proper coordination.

22. The post-fire safe-shutdown circuit analysis ensures that one success path of shutdown SSCs remains free of fire damage.

23. The potential effects on Class 1E equipment of harmonics introduced by non-linear loads are maintained within requirements.

24. The non-segregated busducts/cable buses to Class 1E buses in the T/B electrical room are segregated into two groups by qualified fire barriers.

25. The raceway systems for Class 1E ac electric power system cables meet seismic Category I requirements.

26. The Class 1E ac electrical power system cables are routed in raceway systems for Class 1E ac power system cables within their respective division.

2.6.1.2 Inspections, Tests, Analyses, and Acceptance Criteria

Table 2.6.1-3 describes the ITAAC for the onsite ac electric power system.

Table 2.6.1-1 AC Electric Power Systems – Safety-related Equipment Characteristics

Equipment Name	Seismic Category	Class 1E/Qual. for Harsh Environ.
A-Class 1E 6.9kV Switchgear	I	Yes/No
B-Class 1E 6.9kV Switchgear	I	Yes/No
C-Class 1E 6.9kV Switchgear	I	Yes/No
D-Class 1E 6.9kV Switchgear	I	Yes/No
A-RCP Trip Switchgear	I	Yes/No
B-RCP Trip Switchgear	I	Yes/No
C-RCP Trip Switchgear	I	Yes/No
D-RCP Trip Switchgear	I	Yes/No
A-Class 1E 480V Load Center	I	Yes/No
A1-Class 1E 480V Load Center	I	Yes/No
B-Class 1E 480V Load Center	I	Yes/No
C-Class 1E 480V Load Center	I	Yes/No
D-Class 1E 480V Load Center	I	Yes/No
D1-Class 1E 480V Load Center	I	Yes/No
A-Class 1E Motor Control Center	I	Yes/No
A1-Class 1E Motor Control Center	I	Yes/No
B-Class 1E Motor Control Center	I	Yes/No
C-Class 1E Motor Control Center	I	Yes/No
D-Class 1E Motor Control Center	I	Yes/No
D1-Class 1E Motor Control Center	I	Yes/No

Table 2.6.1-2 AC Electric Power Systems Equipment Displays and Control Functions

Equipment Name	MCR Display	MCR Control Function
A-Class 1E 6.9kV Switchgear	Yes	Yes (Breaker open/close)
B-Class 1E 6.9kV Switchgear	Yes	Yes (Breaker open/close)
C-Class 1E 6.9kV Switchgear	Yes	Yes (Breaker open/close)
D-Class 1E 6.9kV Switchgear	Yes	Yes (Breaker open/close)
A-RCP Trip Switchgear	Yes	Yes (Breaker open/close)
B-RCP Trip Switchgear	Yes	Yes (Breaker open/close)
C-RCP Trip Switchgear	Yes	Yes (Breaker open/close)
D-RCP Trip Switchgear	Yes	Yes (Breaker open/close)
A-Class 1E 480V Load Center	Yes	Yes (Breaker open/close)
A1-Class 1E 480V Load Center	Yes	Yes (Breaker open/close)
B-Class 1E 480V Load Center	Yes	Yes (Breaker open/close)
C-Class 1E 480V Load Center	Yes	Yes (Breaker open/close)
D-Class 1E 480V Load Center	Yes	Yes (Breaker open/close)
D1-Class 1E 480V Load Center	Yes	Yes (Breaker open/close)
A-Class 1E Motor Control Center	Yes	No
A1-Class 1E Motor Control Center	Yes	No
B-Class 1E Motor Control Center	Yes	No
C-Class 1E Motor Control Center	Yes	No
D-Class 1E Motor Control Center	Yes	No
D1-Class 1E Motor Control Center	Yes	No
Unit Auxiliary Transformer (UAT 1, 2, 3, 4)	Yes	No
Reserve Auxiliary Transformer (RAT 1, 2, 3, 4)	Yes	No

Table 2.6.1-3 AC Electric Power Systems Inspections, Tests, Analyses, and Acceptance Criteria (Sheet 1 of 7)

Design Commitment	Inspections, Tests, Analyses	Acceptance Criteria
1. The functional arrangement of the ac electric power systems is as described in the Design Description of Subsection 2.6.1.1 and as shown in Figure 2.6.1-1.	1. Inspection of the as-built ac electric power systems will be performed.	1. The as-built ac electric power systems conform to the functional arrangement as described in the Design Description of Subsection 2.6.1.1 and as shown in Figure 2.6.1-1.
2. Independence is provided between each of the four divisions of the Class 1E distribution equipment and circuits, and between Class 1E distribution equipment and circuits and non-Class 1E distribution equipment and circuits.	2. Tests will be performed on the as-built Class 1E and non-Class 1E distribution equipment and circuits by providing a test signal in only one division at a time.	2. The test signal exists in the as-built Class 1E division or non-Class 1E division under test.
3. Independence between Class 1E electric power distribution equipment and non-Class 1E loads is provided by Class 1E qualified isolation devices.	3.i Type tests, analyses, or a combination of type test and analyses will be performed to verify the qualification of isolation devices.	3.i A report exists and concludes that the Class 1E electric power distribution equipment is isolated from the as-built non-Class 1E loads by the Class 1E qualified isolation devices so as to meet RG 1.75.
	3.ii Inspection will be performed of the as-built Class 1E electric power distribution equipment.	3.ii Independence between the as-built Class 1E electric power distribution equipment and non-Class 1E loads is provided by Class 1E qualified isolation devices.
4. The Class 1E electric power distribution equipment of redundant divisions, identified in Table 2.6.1-1, is located in separate rooms in the reactor building.	4. Inspection of the as-built Class 1E electric power distribution equipment will be performed.	4. The as-built Class 1E electric power distribution equipment of redundant divisions, identified in Table 2.6.1-1, is located in the separate rooms in the reactor building.
5. Each Class 1E EPS is located in a separate room in the power source buildings.	5. Inspection of the as-built EPS will be performed.	5. Each as-built Class 1E EPS is located in a separate room in the power source buildings.
6.a The seismic Category I Class 1E ac electrical power system equipment, identified in Table 2.6.1-1, can withstand seismic design basis loads without	6.a.i Inspections will be performed to verify that the seismic Category I as-built Class 1E ac electrical power system equipment identified in Table 2.6.1-1, is located in a seismic Category I structure.	6.a.i The seismic Category I as-built Class 1E ac electric power system equipment, identified in Table 2.6.1-1, is located in a seismic Category I structure.

Table 2.6.1-3 AC Electric Power Systems Inspections, Tests, Analyses, and Acceptance Criteria (Sheet 2 of 7)

Design Commitment	Inspections, Tests, Analyses	Acceptance Criteria
loss of safety function.	6.a.ii Type tests, analyses or a combination of type tests and analyses of seismic Category I Class 1E ac electrical power system equipment identified in Table 2.6.1-1, will be performed using analytical assumptions, or will be performed under conditions, which bound the seismic design basis requirements.	6.a.ii A report exists and concludes that the seismic Category I Class 1E ac electric power system equipment identified in Table 2.6.1-1, can withstand seismic design basis loads without loss of safety function.
	6.a.iii Inspection and analysis will be performed to verify that the as-built seismic Category I Class 1E ac electrical power system equipment identified in Table 2.6.1-1, including anchorages, is seismically bounded by the tested or analyzed conditions.	6.a.iii A report exists and concludes that the as-built seismic Category I Class 1E ac electric power system equipment identified in Table 2.6.1-1, including anchorages, is seismically bounded by the tested or analyzed conditions.
6.b If power through the RATs is not available, each Class 1E medium voltage bus is automatically transferred to the UATs, if available.	6.b A test will be performed to verify that each as-built Class 1E medium voltage bus is automatically transferred to the UAT upon simulated loss of power from the RAT.	6.b Each as-built Class 1E medium voltage bus is automatically transferred to the UAT if power through the RATs is not available.
6.c If both offsite power sources are not available, each Class 1E medium voltage bus automatically connects to its respective EPS.	6.c A test will be performed to verify that each as-built Class 1E medium voltage bus automatically connects to the respective EPS upon simulated loss of power from the RAT and UAT.	6.c Each as-built Class 1E medium voltage bus automatically connects to its respective EPS if both offsite power sources are not available.
7. For all plant trip conditions, except for a trip due to electrical fault in the MT, MG, GLBS, UATs or associated equipment and circuits, the GLBS opens.	7. A test will be performed to verify that the as-built GLBS is opened by a simulated trip signal for each plant trip condition except for a trip due to an electrical fault in the MT, MG, GLBS, UATs or associated equipment and circuits.	7. For all plant trip conditions, except for a trip due to electrical fault in the MT, MG, GLBS, UATs or associated equipment and circuits, the as-built GLBS opens.

Table 2.6.1-3 AC Electric Power Systems Inspections, Tests, Analyses, and Acceptance Criteria (Sheet 3 of 7)

Design Commitment	Inspections, Tests, Analyses	Acceptance Criteria
8. For electrical faults in the MT, MG, GLBS, UATs and associated equipment and circuits, the MT circuit breaker at the switchyard opens.	8. A test will be performed to verify that the as-built MT circuit breaker trip signal is actuated by a simulated electrical fault trip signal for a fault in the MT, MG, GLBS, UATs and associated equipment and circuits.	8. For electrical faults in the MT, MG, GLBS, UATs and associated equipment and circuits, the as-built MT circuit breaker at the switchyard opens.
9. Deleted	9. Deleted	9. Deleted
10. The UATs and RATs power sources are sized for worst case loading conditions for all modes of plant operation and accident conditions.	10.i Analyses will be performed to verify the UATs and RATs power sources are sized for worst case loading conditions for all modes of plant operation and accident conditions.	10.i A report exists and concludes that the UATs and RATs power sources are sized for worst case loading conditions for all modes of plant operation and accident conditions.
	10.ii Inspections will be performed to verify that the ratings of as-built UATs and RATs power sources meet the size requirements determined by the analysis for worst case loading conditions for all modes of plant operation and accident conditions.	10.ii The ratings of as-built UATs and RATs power sources bound the size requirements determined by the analysis for worst case loading conditions for all modes of plant operation and accident conditions.
11.a The Class 1E distribution equipment and circuits are sized to carry the worst case load currents, to withstand the maximum fault currents, and to provide minimum design basis voltage at load terminals to support accomplishment of their safety functions.	11.a.i Analyses will be performed to verify the Class 1E distribution equipment and circuits are sized to carry the worst case load currents, to withstand the maximum fault currents, and to provide minimum design basis voltage at load terminals to support accomplishment of their safety functions.	11.a.i A report exists and concludes that the Class 1E distribution equipment and circuits are sized to carry the worst case load currents, can withstand the maximum fault currents, and are able to provide minimum design basis voltage at load terminals to support accomplishment of their safety functions.

Table 2.6.1-3 AC Electric Power Systems Inspections, Tests, Analyses, and Acceptance Criteria (Sheet 4 of 7)

Design Commitment	Inspections, Tests, Analyses	Acceptance Criteria
	11.a.ii Inspection will be performed to verify that the ratings of as-built Class 1E distribution equipment and circuits bound the results of the analysis to carry the worst case load currents, to withstand the maximum fault currents, and to provide minimum design basis voltage at load terminals to support accomplishment of their safety functions.	11.a.ii The ratings of as-built Class 1E distribution equipment and circuits bound the results of the analysis to carry the worst case load currents, can withstand the maximum fault currents, and are able to provide minimum design basis voltage at load terminals to support accomplishment of their safety functions.
11.b The Class 1E cables are sized considering derating due to ambient temperature and raceway loading.	11.b.i Analysis will be performed to verify the Class 1E cables are sized considering derating due to ambient temperature and raceway loading.	11.b.i A report exists and concludes that the Class 1E cables are sized considering derating due to ambient temperature and raceway loading.
	11.b.ii Inspection will be performed to verify that the as-built Class 1E cables' size bound the minimum size determined by the analysis.	11.b.ii The as-built Class 1E cables' size bound the minimum size determined by the analysis.
12. The interrupting ratings of the Class 1E circuit breakers and fuses are adequate for maximum available fault currents.	12.i Analysis will be performed to verify interrupting ratings of the Class 1E circuit breakers and fuses are adequate for maximum available fault currents.	12.i A report exists and concludes that the interrupting ratings of the Class 1E circuit breakers and fuses are adequate for maximum available fault currents.
	12.ii Inspection will be performed to verify the interrupting ratings of the Class 1E circuit breakers and fuses bound the requirements of the analysis for maximum available fault currents.	12.ii The interrupting ratings of the as-built Class 1E circuit breakers and fuses bound the requirements of the analysis for maximum available fault currents.
13. The MT, UATs, and RATs have their own fire deluge system, oil pit and drain system.	13. Inspection of the as-built fire deluge system, oil pit and drain system for the MT, UATs, and RATs will be performed.	13. The as-built MT, UATs, and RATs each have their own fire deluge system, oil pit and drain system.

Table 2.6.1-3 AC Electric Power Systems Inspections, Tests, Analyses, and Acceptance Criteria (Sheet 5 of 7)

Design Commitment	Inspections, Tests, Analyses	Acceptance Criteria
14. The UATs power feeders are separated from RATs power feeders.	14. Inspection and analysis of the as-built UATs power feeders and the as-built RATs power feeders will be performed.	14. A report exists and concludes that the as-built UATs power feeders are separated from the as-built RATs power feeders by distance or physical barriers so as to minimize the likelihood of their simultaneous failure under design basis conditions.
15. The MT and GLBS power feeders are separated from the RATs power feeders.	15. Inspection and analysis of the as-built MT, GLBS and RATs will be performed.	15. A report exists and concludes that the as-built MT and GLBS power feeders are separated from the as-built RATs power feeders by distance or physical barriers so as to minimize the likelihood of their simultaneous failure under design basis conditions.
16. The dc control power for Class 1E switchgear and load centers of each division is supplied from the same division of the dc system.	16. Inspection of the as-built dc control power source of the Class 1E switchgear and load centers will be performed.	16. The dc control power for as-built Class 1E switchgear and load centers of each division is supplied from the same division of the dc system.
17. Equipment and circuits of each Class 1E division are uniquely identified.	17. Inspection of the as-built equipment and circuits of each Class 1E division will be performed.	17. The as-built equipment and circuits of each Class 1E division are uniquely identified.
18. The Class 1E equipment is protected from sustained degraded voltage conditions.	18.i Analysis will be performed to verify the Class 1E equipment is protected from sustained degraded voltages conditions.	18.i A report exists and concludes that the Class 1E equipment is protected from sustained degraded voltage conditions by degraded voltage relays.
	18.ii Inspection and test will be performed to verify the as-built protection system bounds the result of analysis for Class 1E equipment protection from sustained degraded voltages conditions.	18.ii The as-built protection system bounds the result of analysis for Class 1E equipment protection from sustained degraded voltages conditions.
19. There is no provision for automatic connection between redundant Class 1E buses.	19. Inspection of the as-built Class 1E buses will be performed.	19. There is no provision for automatic connection between redundant as-built Class 1E buses.

Table 2.6.1-3 AC Electric Power Systems Inspections, Tests, Analyses, and Acceptance Criteria (Sheet 6 of 7)

Design Commitment	Inspections, Tests, Analyses	Acceptance Criteria
20.a Displays of voltage and current of the Class 1E medium voltage buses are provided in the MCR.	20.a Inspection will be performed for retrievability of the voltage and current displays of Class 1E medium voltage buses in the as-built MCR.	20.a Displays of voltage and current of the Class 1E medium voltage buses can be retrieved in the as-built MCR.
20.b Controls are provided in the MCR and locally to open and close the Class 1E 6.9kV switchgear and 480V load center buses incoming circuit breakers identified in Table 2.6.1-2.	20.b Tests will be performed on the as-built Class 1E 6.9kV switchgear and 480V load center buses incoming circuit breakers identified in Table 2.6.1-2 using controls in the as-built MCR and locally.	20.b Controls in the as-built MCR and locally open and close the as-built Class 1E 6.9kV switchgear and 480V load center buses incoming circuit breakers identified in Table 2.6.1-2.
20.c Displays of the Class 1E 6.9kV switchgear and 480V load center buses incoming circuit breakers identified in Table 2.6.1-2 are provided in the MCR.	20.c Inspection will be performed for retrievability of displays of Class 1E 6.9kV switchgear and 480V load center buses incoming circuit breakers identified in Table 2.6.1-2 in the as-built MCR.	20.c Displays of Class 1E 6.9kV switchgear and 480V load center buses incoming circuit breakers identified in Table 2.6.1-2 can be retrieved in the as-built MCR.
21. Class 1E ac electric distribution system overcurrent protection is set for proper coordination.	21.i Analyses of Class 1E ac electrical distribution system overcurrent protection will be performed to verify proper coordination.	21.i A report exists and concludes that the as-built Class 1E ac electric distribution system overcurrent protection is set for proper coordination.
	21.ii Inspection and test will be performed of the Class 1E ac electrical distribution system to verify that the as-built overcurrent protection system bounds the results of the analysis for proper coordination.	21.ii The as-built Class 1E ac electrical distribution system overcurrent protection system bounds the results of the analysis for proper coordination.
22. The post-fire safe-shutdown circuit analysis ensures that one success path of shutdown SSCs remains free of fire damage.	22. Analyses of post fire safe shutdown circuit analysis and supporting breaker coordination will be performed.	22. A report exists and concludes that the post-fire safe-shutdown circuit analysis ensures that one success path of shutdown SSCs remains free of fire damage.
23. The potential effects on Class 1E equipment of harmonics introduced by non-linear loads are maintained within requirements.	23. Analyses will be performed to determine the potential effects on Class 1E equipment of harmonics introduced by non-linear loads.	23. A report exists and concludes that the potential effects on Class 1E equipment of harmonics introduced by non-linear loads are maintained within requirements.

Table 2.6.1-3 AC Electric Power Systems Inspections, Tests, Analyses, and Acceptance Criteria (Sheet 7 of 7)

Design Commitment	Inspections, Tests, Analyses	Acceptance Criteria
24. The non-segregated busducts/cable buses to Class 1E buses in the T/B electrical room are segregated into two groups by qualified fire barriers.	24. Inspection will be performed of the as-built non-segregated busducts/cable buses to Class 1E buses in the T/B electrical room.	24. The as-built non-segregated busducts/cable buses to Class 1E buses in the T/B electrical room are segregated into two groups by qualified fire barriers.
25. The raceway systems for Class 1E ac electric power system cables meet seismic Category I requirements.	25.i Inspections will be performed to verify that the as-built raceway systems for Class 1E ac electric power system cables are supported by a seismic Category I structure(s).	25.i The as-built raceway systems for Class 1E ac electric power system cables are supported by a seismic Category I structure(s).
	25.ii Analysis of the raceway systems for Class 1E ac electric power system cables will be performed using analytical assumptions which bound the seismic design basis requirements.	25.ii A report exists and concludes that the raceway systems for Class 1E ac electric power system cables meet seismic Category I requirements.
	25.iii Inspection and analysis will be performed to verify that the as-built raceway systems for Class 1E ac electric power system cables are seismically bounded by the analyzed conditions.	25.iii A report exists and concludes that the as-built raceway systems for Class 1E ac electric power system cables are seismically bounded by the analyzed conditions.
26 The Class 1E ac electrical power system cables are routed in raceway systems for Class 1E ac electric power system cables within their respective division.	26 Inspection of the as-built Class 1E ac electrical power system cables routing will be performed.	26 The as-built Class 1E ac electrical power system cables are routed in raceway systems for Class 1E ac power system cables within their respective division.

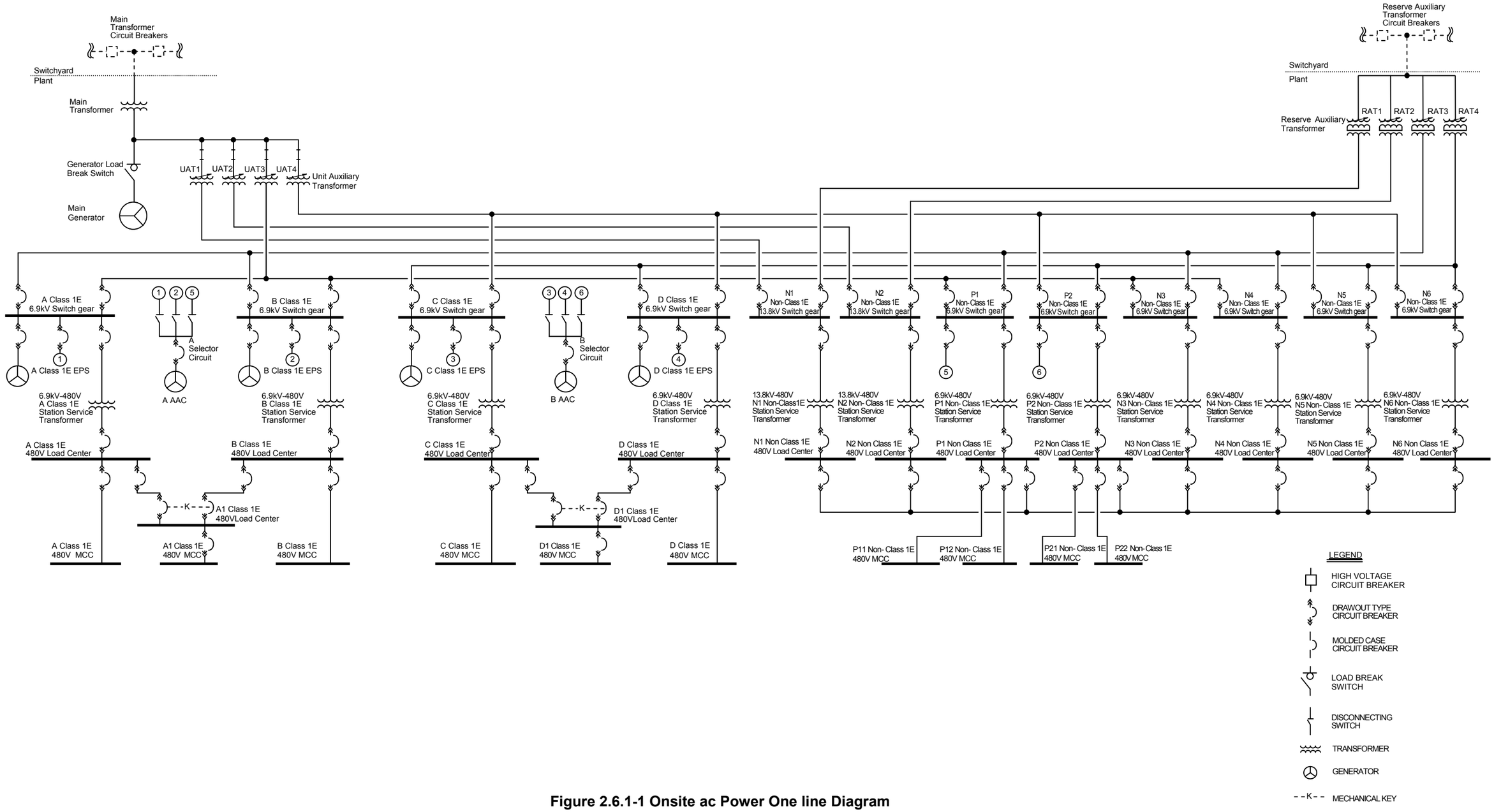

Figure 2.6.1-1 Onsite ac Power One line Diagram

2.6.2 DC Power Systems

2.6.2.1 Design Description

The onsite dc power systems include independent Class 1E, and non-Class 1E dc power systems. Each Class 1E and non-Class 1E dc power system is provided with its own battery, battery charger, switchboard and associated power distribution equipment. Class 1E dc power systems have four independent redundant divisions A, B, C and D, corresponding to four divisions of safety load groups, except for systems containing two 100% redundant load groups. The two 100% load groups are powered from divisions A and D distribution systems identified as A1 and D1. The A1 switchboard bus can be connected to the A or B division switchboard bus, and the D1 switchboard bus can be connected to the D or C division switchboard bus. The Class 1E dc power system is provided with the following alarms and displays in the MCR:

- Switchboard bus voltage and battery current displays
- DC system ground fault alarm
- Battery charger output voltage low alarm
- Battery charger ac input failure alarm
- Battery charger dc output failure alarm
- Battery circuit breaker/disconnect switch open alarm
- Battery charger circuit breaker open alarm
- Battery test circuit breaker closed alarm
- Battery charger common failure/trouble alarm

1. The functional arrangement of the dc electric power systems is as described in the Design Description of Subsection 2.6.2.1 and as shown in Figure 2.6.2-1.

2. The seismic Category I Class 1E dc power supply system equipment, identified in Table 2.6.2-1, can withstand seismic design basis loads without loss of safety function.

3. The Class 1E batteries have enough capacity to carry the worst case load profile for a duration of two hours assuming their chargers are unavailable.

4. Independence is provided between each of the four divisions of the Class 1E dc power system distribution equipment and circuits, and between Class 1E dc power system distribution equipment and circuits and non-Class 1E dc power system distribution equipment and circuits.

5. Independence between Class 1E dc power system distribution equipment and non-Class 1E dc loads is provided by Class 1E qualified isolation devices.

6. Each Class 1E battery charger has enough capacity to supply the normal dc loads of the associated 125V dc switchboard bus and charge the associated battery from the design minimum charge to 95% of its full capacity within twenty-four hours.

7. Alarms and displays identified in Subsection 2.6.2.1 are provided in the MCR.

8. Each redundant division of Class 1E battery is located in a separate room.

9. The Class 1E dc switchboard and battery charger of each division are located in separate rooms.

10. Deleted

11. The Class 1E dc power distribution system cables are sized to carry required load currents and to provide minimum design basis voltage at load terminals, considering derating due to ambient temperature and raceway loading.

12. The Class 1E dc system circuit breakers and fuses are sized to supply their load requirements.

13. The main circuit protection device in the switchboard of each of the four Class 1E dc power divisions has selective coordination with downstream protective devices.

14. The Class 1E dc power system operating voltage range at the terminals of the Class 1E equipment is within the equipment's voltage limit.

15. The equipment and circuits of each division of the Class 1E dc power system are uniquely identified.

16. The Class 1E dc power cables are routed in raceway systems for Class 1E dc power cables within their respective division.

17. The raceway systems for Class 1E dc power cables meet seismic Category I requirements.

2.6.2.2 Inspections, Tests, Analyses, and Acceptance Criteria

Table 2.6.2-2 describes the ITAAC for the dc power systems.

Table 2.6.2-1 DC Power System Equipment Characteristics

Equipment Name	Seismic Category	Class 1E/Qual. for Harsh Environ.
A-Class 1E Battery	I	Yes/No
B-Class 1E Battery	I	Yes/No
C-Class 1E Battery	I	Yes/No
D-Class 1E Battery	I	Yes/No
A-Class 1E Battery Charger	I	Yes/No
B-Class 1E Battery Charger	I	Yes/No
C-Class 1E Battery Charger	I	Yes/No
D-Class 1E Battery Charger	I	Yes/No
A-Class 1E DC Switchboard	I	Yes/No
B-Class 1E DC Switchboard	I	Yes/No
C-Class 1E DC Switchboard	I	Yes/No
D-Class 1E DC Switchboard	I	Yes/No
A1-Class 1E DC Switchboard	I	Yes/No
D1-Class 1E DC Switchboard	I	Yes/No
A-Class 1E MOV Inverter 1	I	Yes/No
A-Class 1E MOV Inverter 2	I	Yes/No
B-Class 1E MOV Inverter	I	Yes/No
C-Class 1E MOV Inverter	I	Yes/No
D-Class 1E MOV Inverter 1	I	Yes/No
D-Class 1E MOV Inverter 2	I	Yes/No
A-Class 1E MOV Control Center 1	I	Yes/No
A-Class 1E MOV Control Center 2	I	Yes/No
B-Class 1E MOV Control Center	I	Yes/No
C-Class 1E MOV Control Center	I	Yes/No
D-Class 1E MOV Control Center 1	I	Yes/No
D-Class 1E MOV Control Center 2	I	Yes/No

Table 2.6.2-2 DC Power Systems Inspections, Tests, Analyses, and Acceptance Criteria (Sheet 1 of 4)

Design Commitment	Inspections, Tests, Analyses	Acceptance Criteria
1. The functional arrangement of the dc electric power systems is as described in the Design Description of Subsection 2.6.2.1 and as shown in Figure 2.6.2-1.	1. Inspection of the functional arrangement of the as-built dc electric power systems will be performed.	1. The as-built dc power systems conform to the functional arrangement as described in the Design Description of Subsection 2.6.2.1 and as shown in Figure 2.6.2-1.
2. The seismic Category I Class 1E dc power supply system equipment, identified in Table 2.6.2-1, can withstand seismic design basis loads without loss of safety function.	2.i Inspections will be performed to verify that the seismic Category I as-built Class 1E dc power supply system equipment identified in Table 2.6.2-1 is located in a seismic Category I structure.	2.i The seismic Category I as-built Class 1E dc power supply system equipment identified in Table 2.6.2-1 is located in a seismic Category I structure.
	2.ii Type tests, analyses or a combination of type tests and analyses of seismic Category I Class 1E dc power supply system equipment identified in Table 2.6.2-1 will be performed using analytical assumptions, or will be performed under conditions, which bound the seismic design basis requirements.	2.ii A report exists and concludes that the seismic Category I Class 1E dc power supply system equipment identified in Table 2.6.2-1 can withstand seismic design basis loads without loss of safety function.
	2.iii Inspections and analyses will be performed to verify that the as-built seismic Category I Class 1E dc power supply system equipment identified in Table 2.6.2-1, including anchorages, is seismically bounded by the tested or analyzed conditions.	2.iii A report exists and concludes that the as-built seismic Category I Class 1E dc power supply system equipment identified in Table 2.6.2-1, including anchorages, is seismically bounded by the tested or analyzed conditions.
3. The Class 1E batteries have enough capacity to carry the worst case load profile for a duration of two hours assuming chargers are unavailable.	3.i Analysis will be performed to verify Class 1E batteries have enough capacity to carry the worst case load profile for a duration of two hours assuming chargers are unavailable.	3.i A report exists and concludes that the Class 1E batteries have enough capacity to carry the worst case load profile for a duration of two hours assuming chargers are unavailable.
	3.ii Inspection will be performed to verify that the rating of the as-built Class 1E batteries bounds the rating of the analysis.	3.ii The rating of the as-built Class 1E batteries bounds the rating of the analysis.

Table 2.6.2-2 DC Power Systems Inspections, Tests, Analyses, and Acceptance Criteria (Sheet 2 of 4)

Design Commitment	Inspections, Tests, Analyses	Acceptance Criteria
4. Independence is provided between each of the four divisions of the Class 1E dc power system distribution equipment and circuits, and between Class 1E dc power system distribution equipment and circuits and non-Class 1E dc power system distribution equipment and circuits.	4. Tests will be performed on the as-built Class 1E and non-Class 1E dc power system distribution equipment and circuits by providing a test signal in only one division at a time.	4. The test signal exists in the as-built Class 1E division or non-Class 1E division under test.
5. Independence between Class 1E dc power system distribution equipment and non-Class 1E loads is provided by Class 1E qualified isolation devices.	5.i Type tests, analyses, or a combination of type tests and analyses will be performed to verify the qualification of isolation devices.	5.i A report exists and concludes that the Class 1E dc power system distribution equipment is isolated from the as-built non-Class 1E loads by Class 1E qualified isolation devices so as to meet RG 1.75.
	5.ii Inspection will be performed of the as-built Class 1E dc power system distribution equipment.	5.ii Independence between the as-built Class 1E dc power system distribution equipment and non-Class 1E loads is provided by Class 1E qualified isolation devices.
6. Each Class 1E battery charger has enough capacity to supply the normal dc loads of the associated 125V dc switchboard bus and charge the associated battery from the design minimum charge to 95% of its full capacity within twenty-four hours.	6.i Analysis will be performed to verify each Class 1E battery charger has enough capacity to supply the normal dc loads of the associated 125V dc switchboard bus and charge the associated battery from the design minimum charge to 95% of its full capacity within twenty-four hours.	6.i A report exists and concludes that each Class 1E battery charger has enough capacity to supply the normal dc loads of the associated 125V dc switchboard bus and charge the associated battery from the design minimum charge to 95% of its full capacity within twenty-four hours.
	6.ii Inspection will be performed to verify that the ratings of the as-built Class 1E battery chargers bound the ratings of the analysis.	6.ii The ratings of the as-built Class 1E battery chargers bound the ratings of the analysis.
7. Alarms and displays identified in Subsection 2.6.2.1 are provided in the MCR.	7. Inspection will be performed for retrievability of alarms and displays identified in Subsection 2.6.2.1 in the as-built MCR.	7. Alarms and displays identified in Subsection 2.6.2.1 can be retrieved in the as-built MCR.

Table 2.6.2-2 DC Power Systems Inspections, Tests, Analyses, and Acceptance Criteria (Sheet 3 of 4)

Design Commitment	Inspections, Tests, Analyses	Acceptance Criteria
8. Each redundant division of Class 1E battery is located in a separate room.	8. Inspection of each as-built Class 1E battery will be performed.	8. Each redundant division of as-built Class 1E battery is located in a separate room.
9. The Class 1E dc switchboard and battery charger of each division are located in separate rooms.	9. Inspection of the as-built Class 1E dc switchboard and battery charger will be performed.	9. The as-built Class 1E dc switchboard and battery charger of each division are located in separate rooms.
10. Deleted	10. Deleted	10. Deleted
11. The Class 1E dc power distribution system cables are sized to carry required load currents and to provide minimum design basis voltage at load terminals considering derating due to ambient temperature and raceway loading.	11.i Analysis will be performed to verify the Class 1E dc power distribution system cables are sized to carry required load currents and to provide minimum design basis voltage at load terminals considering derating due to ambient temperature and raceway loading.	11.i A report exists and concludes that the Class 1E dc power distribution system cables are sized to carry required load currents and to provide minimum design basis voltage at load terminals considering derating due to ambient temperature and raceway loading.
	11.ii Inspection will be performed to verify the size of as-built Class 1E dc power distribution system cables installed bound the minimum size required by the analysis.	11.ii The as-built Class 1E dc power distribution system cables are sized to bound the minimum sizes determined by the analysis.
12. The Class 1E dc system circuit breakers and fuses are sized to supply their load requirements.	12.i Analysis will be performed to verify the Class 1E dc system circuit breakers and fuses are sized to supply their load requirements.	12.i A report exists and concludes that the Class 1E dc system circuit breakers and fuses are sized to supply their load requirements.
	12.ii Inspection will be performed to verify that the ratings of the as-built Class 1E dc system circuit breakers and fuses bound the size requirements of the analysis.	12.ii The ratings of the as-built Class 1E dc system circuit breakers and fuses bound the size requirements of the analysis.
13. The main circuit protection device in the switchboard of each of the four Class 1E dc power divisions has selective coordination with downstream protective devices.	13.i Analysis will be performed to verify the main circuit protection devices have selective coordination with the downstream protective devices.	13.i A report exists and concludes that the main circuit protection device in the switchboard of each of the four Class 1E dc power divisions, has selective coordination with the downstream protective devices.

Table 2.6.2-2 DC Power Systems Inspections, Tests, Analyses, and Acceptance Criteria (Sheet 4 of 4)

Design Commitment	Inspections, Tests, Analyses	Acceptance Criteria
	13.ii Inspection of the as-built main circuit protection devices in the as-built switchboards will be performed.	13.ii The as-built main circuit protection device in the as-built switchboard of each of the four Class 1E dc power divisions is the same as that used in the coordination analysis.
14. The Class 1E dc power system operating voltage range at the terminals of the Class 1E equipment is within the equipment's voltage limit.	14. Analysis will be performed to verify the Class 1E dc power system operating voltage range at the terminals of the Class 1E equipment.	14. A report exists and concludes that the Class 1E dc power system operating voltage range at the terminals of the Class 1E equipment is within the voltage limit of the as-built Class 1E equipment.
15. The equipment and circuits of each division of the Class 1E dc power system are uniquely identified.	15. Inspection of the as-built equipment and circuits of each division of the Class 1E dc power system will be performed.	15. The as-built equipment and circuits of each division of the Class 1E dc power system are uniquely identified.
16. The Class 1E dc power cables are routed in raceway systems for Class 1E dc power cables within their respective division.	16. Inspection of the as-built Class 1E dc power cables routing will be performed.	16. The as-built Class 1E dc power cables are routed in raceway systems for Class 1E dc power cables within their respective division.
17. The raceway systems for Class 1E dc power cables meet seismic Category I requirements.	17.i Inspections will be performed to verify that the as-built raceway systems for Class 1E dc power system cables are supported by a seismic Category I structure(s).	17.i The as-built raceway systems for Class 1E dc power cables are supported by a seismic Category I structure(s).
	17.ii Analysis of the raceway systems for Class 1E dc power cables will be performed using analytical assumptions which bound the seismic design basis requirements.	17.ii A report exists and concludes that the raceway systems for Class 1E dc power cables meet seismic Category I requirements.
	17.iii Inspection and analysis will be performed to verify that the as-built raceway systems for Class 1E dc power cables are seismically bounded by the analyzed conditions.	17.iii A report exists and concludes that the as-built raceway systems for Class 1E dc power cables are seismically bounded by the analyzed conditions.

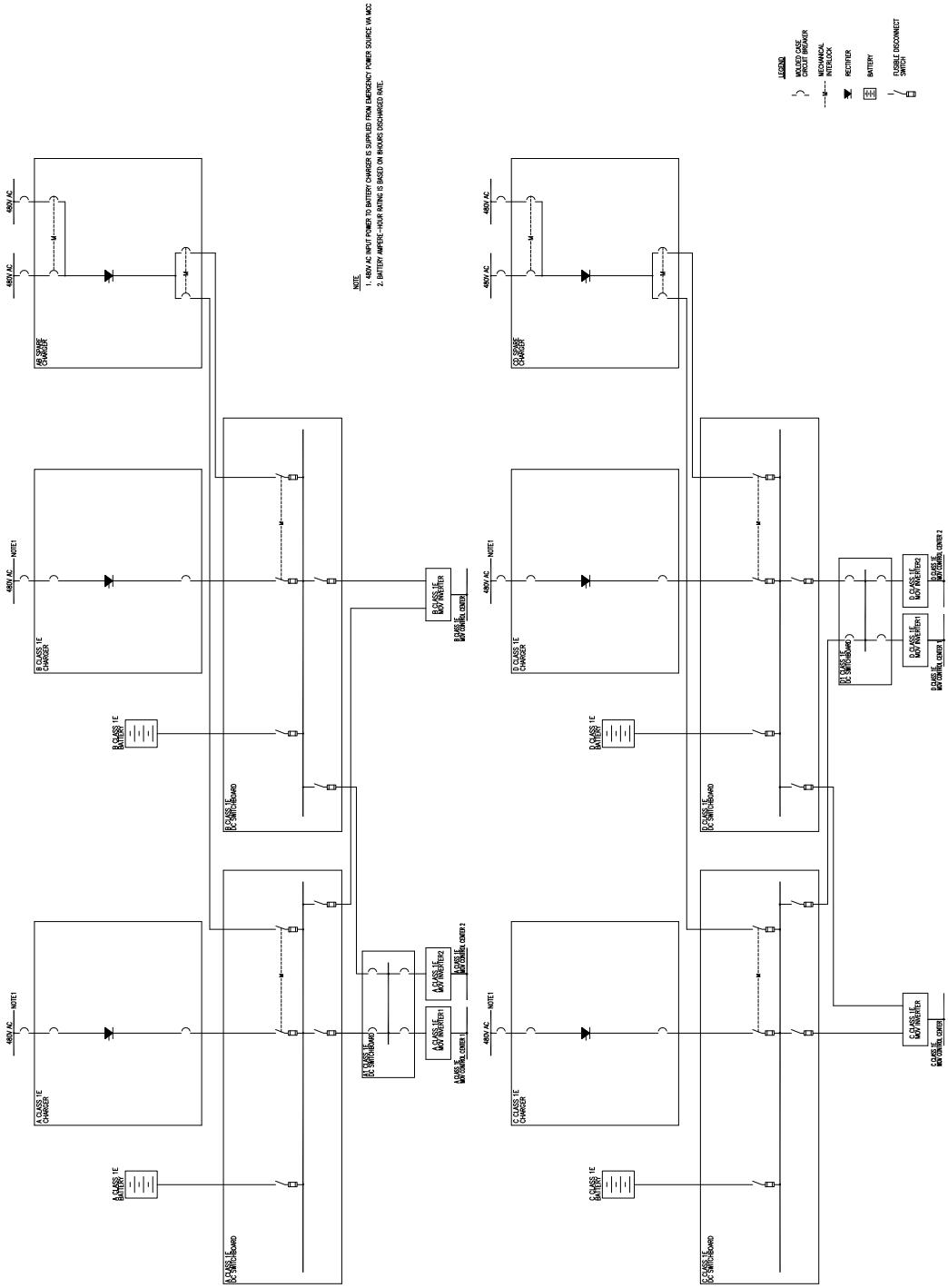

Figure 2.6.2-1 DC Power Systems

2.6.3 I&C Power Supply Systems

2.6.3.1 Design Description

The I&C power supply system has four independent Class 1E 120V ac I&C power supply trains A, B, C and D that supply four trains of the protection and reactor control systems. Each train consists of an uninterruptible power supply (UPS), which contains an inverter and a bypass transformer, and 120V ac distribution panels. The I&C power supply system is shown in Figure 2.6.3-1. Major components of this system are listed in Table 2.6.3-1. In addition to the displays and controls identified in Table 2.6.3-2, the following indications are provided in the main control room (MCR):

- Output voltage and current of Class 1E UPS
- Voltage of Class 1E I&C buses

1. The functional arrangement of the I&C power supply systems is as described in the Design Description of Subsection 2.6.3.1 and as shown in Figure 2.6.3-1.

2. The Class 1E I&C power supply system equipment and cables are sized to meet load requirements and provide minimum design basis voltage at load terminals, considering derating due to ambient temperature and raceway loading.

3. The seismic Category I Class 1E I&C power supply system equipment identified in Table 2.6.3-1 can withstand seismic design basis loads without loss of safety function.

4. Deleted.

5. The equipment of each I&C power supply system division, identified in Table 2.6.3-1, is located in separate rooms.

6. Independence is maintained between each of the four divisions of the Class 1E I&C power supply system distribution equipment and circuits, and between Class 1E I&C power supply system distribution equipment and circuits and non-Class 1E I&C power supply system distribution equipment and circuits.

7. Independence is maintained between Class 1E I&C power supply system distribution equipment and non-Class 1E loads by Class 1E qualified isolation devices.

8. The power supply to each of the four Class 1E panel boards transfers from the inverter to the bypass transformer within the associated Class 1E UPS unit automatically on a loss of inverter output condition.

9. When ac input power to the Class 1E UPS unit is lost, input to the Class 1E UPS unit is provided by the Class 1E battery without interruption of power supply to the loads.

10. Deleted.

11. The Class 1E I&C power supply system circuit breakers and fuses are rated adequately to interrupt the fault currents.

12. The equipment and circuits of each Class 1E I&C power supply system division are uniquely identified.

13. The Class 1E I&C power supply system cables are routed in raceway systems for Class 1E I&C power supply cables within their respective division.

14. Alarms and displays identified in Subsection 2.6.3.1 and Table 2.6.3-2 are provided in the MCR.

15. The raceway systems for Class 1E I&C power supply cables meet seismic Category I requirements.

2.6.3.2 Inspections, Tests, Analyses, and Acceptance Criteria

Table 2.6.3-3 describes the ITAAC for the Class 1E I&C power supply systems.

Table 2.6.3-1 I&C Power Supply Systems Equipment Characteristics

Equipment Name	Seismic Category	Class 1E/Qual. for Harsh Environ.
A-Class 1E UPS Unit	I	Yes/No
B-Class 1E UPS Unit	I	Yes/No
C-Class 1E UPS Unit	I	Yes/No
D-Class 1E UPS Unit	I	Yes/No
A-Class 1E AC120V Panelboard	I	Yes/No
B-Class 1E AC120V Panelboard	I	Yes/No
C-Class 1E AC120V Panelboard	I	Yes/No
D-Class 1E AC120V Panelboard	I	Yes/No

Table 2.6.3-2 I&C Power Supply Systems Equipment Displays and Control Functions

Equipment Name	MCR Display	MCR Control Function
A-Class 1E UPS Unit	Yes	No
B-Class 1E UPS Unit	Yes	No
C-Class 1E UPS Unit	Yes	No
D-Class 1E UPS Unit	Yes	No
A-Class 1E AC120V Panelboard	Yes	No
B-Class 1E AC120V Panelboard	Yes	No
C-Class 1E AC120V Panelboard	Yes	No
D-Class 1E AC120V Panelboard	Yes	No

Table 2.6.3-3 I&C Power Supply Systems Inspections, Tests, Analyses, and Acceptance Criteria (Sheet 1 of 4)

Design Commitment	Inspections, Tests, Analyses	Acceptance Criteria
1. The functional arrangement of the I&C power supply systems is as described in the Design Description of Subsection 2.6.3.1 and as shown in Figure 2.6.3-1.	1. Inspection of the functional arrangement of the as-built I&C power supply systems will be performed.	1. The as-built I&C power supply systems conform to the functional arrangement described in the Design Description of Subsection 2.6.3.1 and as shown in Figure 2.6.3-1.
2. The Class 1E I&C power supply system equipment and cables are sized to meet load requirements and provide minimum design basis voltage at load terminals, considering derating due to ambient temperature and raceway loading.	2.i Analysis will be performed to verify the Class 1E I&C power supply system equipment and cables are sized to carry the worst case load currents, to withstand the maximum fault currents, and to provide minimum design basis voltage at load terminals for all modes of plant operation and accident conditions.	2.i A report exists and concludes that the Class 1E I&C power supply system equipment and cables are sized to meet load requirements and provide minimum design basis voltage at load terminals, considering derating due to ambient temperature and raceway loading.
	2.ii Inspection will be performed to verify that the ratings of as-built Class 1E I&C power supply system equipment and cables bound the size requirements of the analysis.	2.ii The ratings of as-built Class 1E I&C power supply system equipment and cables bound the size requirements of the analysis.
3. The seismic Category I Class 1E I&C power supply system equipment, identified in Table 2.6.3-1, can withstand seismic design basis loads without loss of safety function.	3.i. Inspections will be performed to verify that the seismic Category I as-built Class 1E I&C power supply system equipment identified in Table 2.6.3-1 is located in a seismic Category I structure.	3.i. The seismic Category I as-built Class 1E I&C power supply system equipment identified in Table 2.6.3-1 is located in a seismic Category I structure.
	3.ii Type tests, analyses, or a combination of type test and analyses of seismic Category I Class 1E I&C power supply system equipment identified in Table 2.6.3-1 will be performed using analytical assumptions, or will be performed under conditions, which bound the seismic design basis requirements.	3.ii A report exists and concludes that the seismic Category I Class 1E I&C power supply system equipment identified in Table 2.6.3-1 can withstand seismic design basis loads without loss of safety function.
	3.iii Inspections and analyses will be performed to verify that the as-built seismic Category I Class 1E I&C power supply system equipment identified in Table 2.6.3-1, including anchorages, is seismically bounded by the tested or analyzed conditions.	3.iii A report exists and concludes that the as-built seismic Category I Class 1 E I&C power supply system equipment identified in Table 2.6.3-1, including anchorages, is seismically bounded by the tested or analyzed conditions.

Table 2.6.3-3 I&C Power Supply Systems Inspections, Tests, Analyses, and Acceptance Criteria (Sheet 2 of 4)

Design Commitment	Inspections, Tests, Analyses	Acceptance Criteria
4. Deleted	4. Deleted	4. Deleted
5. The equipment of each Class 1E I&C power supply system division, identified in Table 2.6.3-1, is located in separate rooms.	5. Inspection of each as-built Class 1E I&C power supply system division, identified in Table 2.6.3-1, will be performed.	5. The equipment of each as-built Class 1E I&C power supply system division, identified in Table 2.6.3-1, is located in separate rooms.
6. Independence is maintained between each of the four divisions of the Class 1E I&C power supply system distribution equipment and circuits, and between Class 1E I&C power supply system distribution equipment and circuits and non-Class 1E I&C power supply system distribution equipment and circuits.	6. Tests will be performed on the as-built Class 1E and non-Class 1E I&C power supply system distribution equipment and circuits by providing a test signal in only one division at a time.	6. The test signal exists in the as-built Class 1E division or non-Class 1E division under test.
7. Independence is maintained between Class 1E I&C power supply system distribution equipment and non-Class 1E loads by Class 1E qualified isolation devices.	7.i Type tests, analyses, or a combination of type tests and analyses will be performed to verify the qualification of isolation devices.	7.i A report exists and concludes that Class 1E I&C power supply system distribution equipment is isolated from non-Class 1E loads by Class 1E qualified isolation devices so as to meet RG 1.75.
	7.ii Inspection will be performed of the as-built Class 1E I&C power supply system distribution equipment.	7.ii Independence between the as-built Class 1E I&C power supply system distribution equipment and the non-Class 1E loads is maintained by qualified isolation devices that are bounded by the type tests, analyses, or a combination of type tests and analyses.
8. The power supply to each of the four Class 1E panel boards transfers from the inverter to the bypass transformer within the associated Class 1E UPS unit automatically on a loss of inverter output condition.	8. A test will be performed to verify that the power supply to each as-built Class 1E panel board transfers from the inverter to the bypass transformer within the associated as-built Class 1E UPS unit automatically on a loss of inverter output condition.	8. The power supply to each of the four as-built Class 1E panel boards transfers from the inverter to the bypass transformer within the associated as-built Class 1E UPS unit automatically on a loss of inverter output condition.

Table 2.6.3-3 I&C Power Supply Systems Inspections, Tests, Analyses, and Acceptance Criteria (Sheet 3 of 4)

Design Commitment	Inspections, Tests, Analyses	Acceptance Criteria
9. When ac input power to the Class 1E UPS unit is lost, input to the Class 1E UPS unit is provided by the Class 1E battery without interruption of power supply to the loads.	9. A test will be performed to verify that when ac input power to the as-built Class 1E UPS unit is lost, input to the Class 1E UPS unit is provided by the Class 1E battery without interruption of power supply to the loads.	9. When ac input power to the as-built Class 1E UPS unit is lost, input to the Class 1E UPS unit is provided by the Class 1E battery without interruption of power supply to the loads.
10. Deleted	10. Deleted	10. Deleted
11. The Class 1E I&C power supply system circuit breakers and fuses are rated adequately to interrupt the fault currents.	11.i Analysis will be performed to verify the Class 1E I&C power supply system breakers and fuses are rated adequately to interrupt the fault currents.	11.i A report exists and concludes that the Class 1E I&C power supply system breakers and fuses are rated adequately to interrupt the fault currents.
	11.ii Inspection will be performed to verify the interrupting ratings of as-built Class 1E I&C power supply system breakers and fuses bound the requirements of the analysis.	11.ii The interrupting ratings of as-built Class 1E I&C power supply system breakers and fuses bound the requirements of the analysis.
12. The equipment and circuits of each Class 1E I&C power supply system division are uniquely identified.	12. Inspection of each as-built Class 1E I&C equipment and circuits of each Class 1E I&C power supply system division will be performed.	12. The equipment and circuits of each as-built Class 1E I&C power supply system division are uniquely identified.
13. The Class 1E I&C power supply system cables are routed in raceway systems for Class 1E I&C power supply cables within their respective division.	13. Inspection of the as-built Class 1E I&C power supply system cables routing will be performed.	13. The as-built Class 1E I&C power supply system cables are routed in raceway systems for Class 1E I&C power supply cables within their respective division.
14. Alarms and displays identified in Subsection 2.6.3.1 and Table 2.6.3-2 are provided in the MCR.	14. Inspection will be performed for retrievability of the alarms and displays identified in Subsection 2.6.3.1 and Table 2.6.3-2 in the as-built MCR.	14. Alarms and displays identified in Subsection 2.6.3.1 and Table 2.6.3-2 can be retrieved in the as-built MCR.
15. The raceway systems for Class 1E I&C power supply cables meet seismic Category I requirements.	15.i Inspections will be performed to verify that the as-built raceway systems for Class 1E I&C power supply cables are supported by a seismic Category I structure(s).	15.i The as-built raceway systems for Class 1E I&C power supply cables are supported by a seismic Category I structure(s).

Table 2.6.3-3 I&C Power Supply Systems Inspections, Tests, Analyses, and Acceptance Criteria (Sheet 4 of 4)

Design Commitment	Inspections, Tests, Analyses	Acceptance Criteria
	15.ii Analyses of the raceway systems for Class 1E I&C power supply cables will be performed using analytical assumptions which bound the seismic design basis requirements.	15.ii A report exists and concludes that the raceway systems for Class 1E I&C power supply cables meet seismic Category I requirements.
	15.iii Inspection and analyses will be performed to verify that the as-built raceway systems for Class 1E I&C power supply cables are seismically bounded by the analyzed conditions.	15.iii A report exists and concludes that the as-built raceway systems for Class 1E I&C power supply cables are seismically bounded by the analyzed conditions.

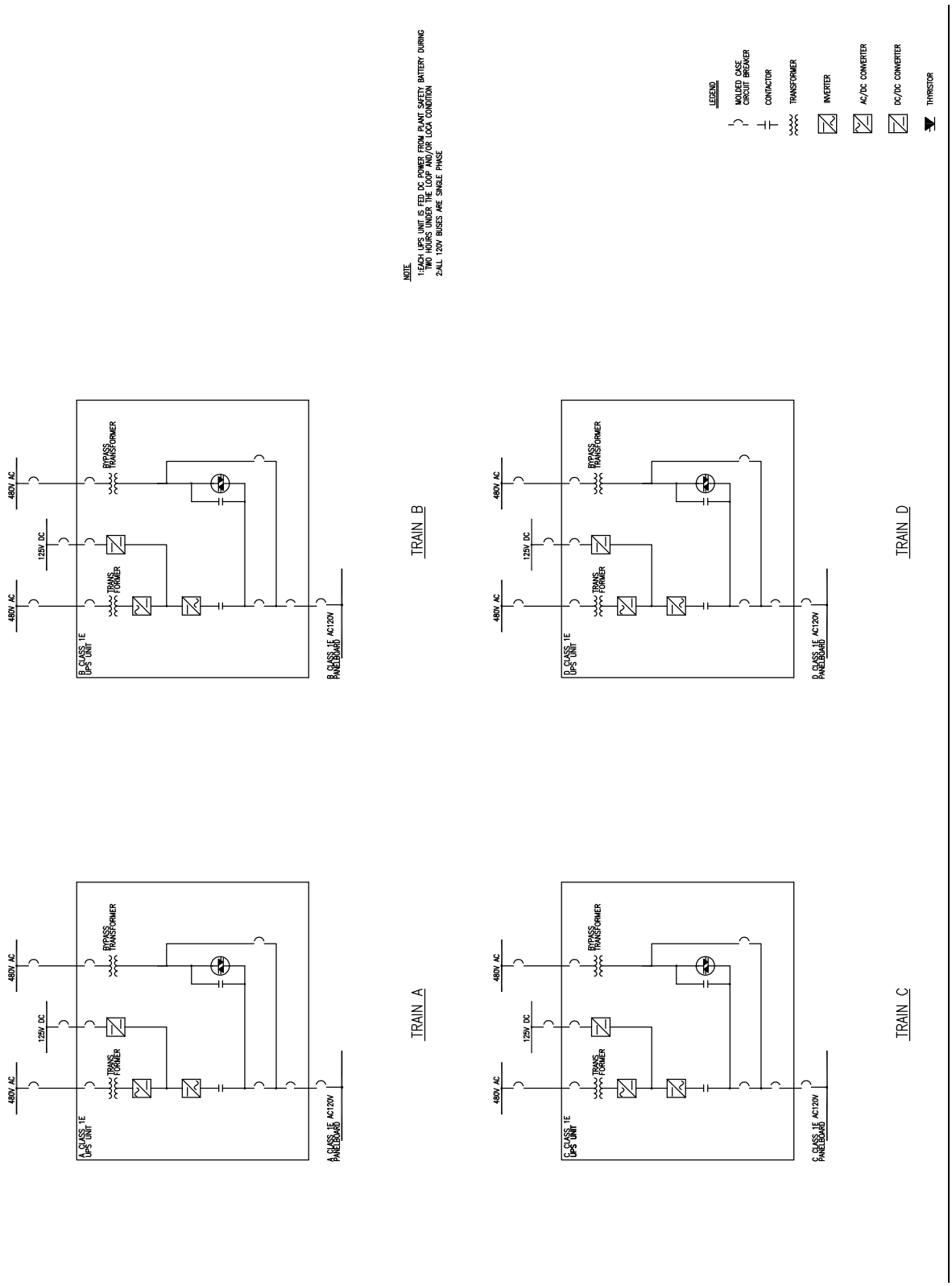

Figure 2.6.3-1 I&C Power Supply Systems

2.6.4 Emergency Power Sources (EPS)

2.6.4.1 EPS Design Description

The emergency power supply to each of the four divisions of the Class 1E power distribution systems is provided by a Class 1E EPS. The Class 1E EPSs are normally in standby mode and provide power to the Class 1E 6.9kV buses upon loss of offsite power sources.

1. The functional arrangement of the Class 1E EPS is as described in the Design Description of Subsection 2.6.4.1.

2. Each Class 1E EPS can, when starting from the standby mode, provide power to the Class 1E 6.9kV buses upon loss of offsite power sources.

3. Each of the four Class 1E EPSs has its own fuel oil storage and transfer, lubrication, starting, and combustion air intake and exhaust systems.

4. The auxiliary power for each Class 1E EPS support system is provided by the same division of the Class 1E power system.

5. Deleted.

6. The four seismic Category I Class 1E EPSs can withstand seismic design basis loads without loss of safety function.

7.a The ASME Code Section III components of the Class 1E EPS support systems, identified in Table 2.6.4-2, retain their pressure boundary integrity at their design pressure.

7.b The ASME Code Section III piping of the Class 1E EPS support systems, identified in Table 2.6.4-2, retains its pressure boundary integrity at its design pressure.

8.a The seismic Category I equipment of the Class 1E EPS support systems, identified in Table 2.6.4-2, can withstand seismic design basis loads without loss of safety function.

8.b The seismic Category I piping, including supports, identified in Table 2.6.4-2 can withstand seismic design basis loads without a loss of its safety function.

9. Each Class 1E EPS is sized to provide power to its division's safety-related loads subsequent to a LOOP or a LOOP concurrent with LOCA conditions.

10. The stored air starting system is capable of starting the Class 1E EPS without requiring replenishment.

11. The Class 1E EPS engine combustion air intake is separated from the engine exhaust.

12.a Independence is maintained between each of the four Class 1E EPSs.

12.b The Class 1E EPSs are located in separate rooms in the PS/B.

13. Each Class 1E EPS is capable of providing power at the set voltage and frequency to its Class 1E 6.9kV bus within 100 seconds of receiving a start signal.

14.a The ECCS actuation signal starts the Class 1E EPSs.

14.b Each Class 1E EPS circuit breaker automatically closes and loads are shed if its respective division Class 1E medium voltage bus is de-energized.

14.c After the Class 1E EPS circuit breaker closes, the safety-related loads on the same division Class 1E buses are started in sequence by the ECCS load sequencer.

15.a A loss of power to a Class 1E bus initiates an automatic start of the respective Class 1E EPS, load shedding of connected loads, and closing of the Class 1E EPS circuit breaker.

15.b After the closing of the Class 1E EPS circuit breaker, the LOOP sequencer sequentially starts the required safety-related loads.

16. All Class 1E EPS protection systems, except for overspeed, generator differential current, and high exhaust gas temperature, are bypassed when the Class 1E EPS is started by an ECCS actuation signal.

17. The Class 1E EPSs are capable of responding to an automatic start signal when running for test purposes.

18. Controls are provided in the MCR and the Class 1E EPS room to start and stop each Class 1E EPS.

2.6.4.2 EPS Support Systems Design Description

Each Class 1E EPS is provided with a dedicated and independent safety-related fuel oil supply system (FOS), fuel oil day tank and storage tank such that:

- A single failure of any active component of the system cannot affect the ability of the system to store and deliver fuel oil.
- The system contents are protected from the effects of low temperatures.

- Each fuel oil day tank is located inside the associated Class 1E EPS room in the seismic Category I building at the elevation that ensures the fuel oil flow to the respective Class 1E EPS by gravity.
- Two skid mounted transfer pumps serve each Class 1E EPS to transfer fuel oil from the fuel oil storage tank to the Class 1E EPS fuel oil day tank.

The following EPS support system alarms are provided in the MCR:

- Low fuel oil level in the fuel oil storage tanks, and low and high level in the fuel oil day tanks.
- Low pressure in the air receivers.
- Low pressure and high temperature of the lubrication oil system.

The Class 1E EPS ventilation/cooling air intake and exhaust system provides cooling for EPS operation. The Class 1E EPS turbine intake and exhaust and ventilation/cooling air intake and exhaust openings are above the roof of the power source buildings (PS/B), and the portion of the piping/ducts above the roof is protected by a guard structure against precipitation and tornado missiles.

19. The functional arrangement of the Class 1E EPS fuel oil storage and transfer system and the Class 1E EPS ventilation/cooling air intake and exhaust system are as described in the Design Description of Subsection 2.6.4.2.

20. Deleted.

21. Each fuel oil transfer pump transfers fuel oil from the fuel oil storage tank to the Class 1E EPS day tank at a flow rate to support Class 1E EPS operation at continuous rated load while simultaneously increasing day tank level. Sufficient transfer pump NPSH is maintained under all design conditions.

22. Each Class 1E EPS FOS day tank capacity is sufficient to provide fuel oil for 1.5 hours of EPS operation at rated load.

23. Alarms identified in Subsection 2.6.4.2 are provided in the MCR.

24. The fuel oil transfer pump starts automatically on a fuel oil day tank low level signal and stops automatically on a fuel oil day tank high-level signal.

25. The fuel oil transfer pumps are powered from their respective Class 1E division.

26.a.i The ASME Code Section III components of the EPS support systems, identified in Table 2.6.4-2, are fabricated, installed, and inspected in accordance with ASME Code Section III requirements.

26.a.ii The ASME Code Section III components of the EPS support systems, identified in Table 2.6.4-2, are reconciled with the design requirements.

26.b.i The ASME Code Section III piping of the EPS support systems, including supports, identified in Table 2.6.4-2, is fabricated, installed, and inspected in accordance with ASME Code Section III requirements.

26.b.ii The ASME Code Section III piping of the of the EPS support systems, including supports, identified in Table 2.6.4-2, is reconciled with the design requirements.

27.a Pressure boundary welds in ASME Code Section III components, identified in Table 2.6.4-2, meet ASME Code Section III requirements for non-destructive examination of welds.

27.b Pressure boundary welds in ASME Code Section III piping, identified in Table 2.6.4-2, meet ASME Code Section III requirements for non-destructive examination of welds.

28. Deleted.

29. Each fuel oil storage tank provides a seven day supply of fuel oil to its respective Class 1E EPS while operating at rated load.

30. Each lubrication oil tank provides a seven day supply of lubrication oil to its respective Class 1E EPS.

31. Each main shaft driven lubrication oil pump circulates lubrication oil to the engine during EPS operation.

32. Each division of the Class 1E EPS combustion air intake and exhaust system is capable of supplying combustion air to the EPS and of disposing exhaust gases of the EPS when operating at 110% of nameplate rating.

2.6.4.3 Inspections, Tests, Analyses, and Acceptance Criteria

Table 2.6.4-1 describes the ITAAC for the Class 1E EPS and the FOS systems.

Table 2.6.4-1 EPS Systems Inspections, Tests, Analyses, and Acceptance Criteria (Sheet 1 of 10)

Design Commitment	Inspections, Tests, Analyses	Acceptance Criteria
1. The functional arrangement of the Class 1E EPS is as described in the Design Description of Subsection 2.6.4.1.	1. Inspection of the functional arrangement of the as-built Class 1E EPS will be performed.	1. The as-built onsite Class 1E EPS conforms to the functional arrangement as described in the Design Description of Subsection 2.6.4.1.
2. Each Class 1E EPS can, when starting from the standby mode, provide power to the Class 1E 6.9kV buses upon loss of offsite power sources.	2. A test of each as-built Class 1E EPS will be performed.	2. Each as-built Class 1E EPS can, when starting from the standby mode, provide power to the as-built Class 1E 6.9kV buses upon loss of offsite power sources.
3. Each of the four Class 1E EPSs has its own fuel oil storage and transfer, lubrication, starting, and combustion air intake and exhaust systems.	3. Inspection of each as-built Class 1E EPS and support systems will be performed.	3. Each of the four as-built Class 1E EPS has its own fuel oil storage and transfer, lubrication, starting, and combustion air intake and exhaust systems.
4. The auxiliary power for each Class 1E EPS support system is provided by the same division of the Class 1E power system.	4.i Inspection of each as-built Class 1E EPS support system will be performed.	4.i The auxiliary power for each as-built Class 1E EPS support system is provided by same division of the Class 1E power system.
	4.ii A test of each as-built Class 1E EPS support system will be performed to verify that auxiliary power is provided by the same division of the Class 1E power system.	4.ii The auxiliary power for each as-built Class 1E EPS support system is provided by the same division of the Class 1E power system.
5. Deleted.	5. Deleted.	5. Deleted.
6. The four seismic Category I Class 1E EPSs can withstand seismic design basis loads without loss of safety function.	6.i Inspections will be performed to verify that each seismic Category I as-built Class 1E EPS is located in a seismic Category I structure.	6.i Each of the four seismic Category I as-built Class 1E EPSs is located in a seismic Category I structure.
	6.ii Type tests, analyses or a combination of type tests and analyses of the four seismic Category I Class 1E EPSs will be performed using analytical assumptions, or will be performed under conditions, which bound the seismic design basis requirements.	6.ii A report exists and concludes that the four seismic Category I Class 1E EPSs can withstand seismic design basis loads without loss of safety function.

Table 2.6.4-1 EPS Systems Inspections, Tests, Analyses, and Acceptance Criteria (Sheet 2 of 10)

Design Commitment	Inspections, Tests, Analyses	Acceptance Criteria
	6.iii Inspections and analyses will be performed to verify that each as-built seismic Category I Class 1E EPS, including anchorages, is seismically bounded by the tested or analyzed conditions.	6.iii A report exists and concludes that each of the four as-built seismic Category I Class 1E EPSs, including anchorages, is seismically bounded by the tested or analyzed conditions.
7.a The ASME Code Section III components of the Class 1E EPS support systems, identified in Table 2.6.4-2, retain their pressure boundary integrity at their design pressure.	7.a A hydrostatic test will be performed on the as-built components identified in Table 2.6.4-2 required by the ASME Code Section III to be hydrostatically tested.	7.a ASME Code Data Report(s) exists and conclude that the results of the hydrostatic test of the as-built components of the Class 1E EPS support systems, identified in Table 2.6.4-2 as ASME Code Section III conform to the requirements of ASME Code Section III.
7.b The ASME Code Section III piping of the Class 1E EPS support systems, identified in Table 2.6.4-2, retains its pressure boundary integrity at its design pressure.	7.b A hydrostatic test will be performed on the as-built piping, identified in Table 2.6.4-2, required by the ASME Code Section III to be hydrostatically tested.	7.b ASME Code Data Report(s) exists and conclude that the results of the hydrostatic tests of the as-built piping of the Class 1E EPS support systems, identified in Table 2.6.4-2, as ASME Code Section III conform to the requirements of ASME Code Section III.
8.a The seismic Category I equipment of the Class 1E EPS support systems, identified in Table 2.6.4-2 can withstand seismic design basis loads without loss of safety function.	8.a.i Inspections will be performed to verify that the seismic Category I equipment identified in Table 2.6.4-2 is located in a seismic Category I structure.	8.a.i The as-built seismic Category I equipment of the Class 1E EPS support systems, identified in Table 2.6.4-2, is located in a seismic Category I structure.
	8.a.ii Type tests, analyses, or a combination of type tests and analyses of the seismic Category I equipment identified in Table 2.6.4-2 will be performed using analytical assumptions, or will be performed under conditions, which bound the seismic design basis requirements.	8.a.ii A report exists and concludes that the seismic Category I equipment of the Class 1E EPS support systems, identified in Table 2.6.4-2 can withstand seismic design basis loads without loss of safety function.

Table 2.6.4-1 EPS Systems Inspections, Tests, Analyses, and Acceptance Criteria (Sheet 3 of 10)

Design Commitment	Inspections, Tests, Analyses	Acceptance Criteria
	8.a.iii Inspections and analyses will be performed to verify that the as-built seismic Category I equipment identified in Table 2.6.4-2, including anchorages, is seismically bounded by the tested or analyzed conditions.	8.a.iii A report exists and concludes that the as-built seismic Category I equipment identified in Table 2.6.4-2, including anchorages, is seismically bounded by the tested or analyzed conditions.
8.b The seismic Category I piping, including supports, identified in Table 2.6.4-2 can withstand seismic design basis loads without a loss of its safety function.	8.b.i Inspections will be performed to verify that the as-built seismic Category I piping, including supports, identified in Table 2.6.4-2 is supported by a seismic Category I structure(s).	8.b.i The as-built seismic Category I piping, including supports, identified in Table 2.6.4-2 is supported by a seismic Category I structure(s).
	8.b.ii Inspections and analyses will be performed to verify that the as-built seismic Category I piping, including supports, identified in Table 2.6.4-2 can withstand seismic design basis loads without a loss of its safety function.	8.b.ii A report exists and concludes that the as-built seismic Category I piping, including supports, identified in Table 2.6.4-2 can withstand seismic design basis loads without a loss of its safety function.
9. Each Class 1E EPS is sized to provide power to its division's safety-related loads subsequent to a LOOP or a LOOP concurrent with LOCA conditions.	9.i Analysis will be performed to verify that each Class 1E EPS is capable of providing power to its division's safety-related loads subsequent to a LOOP or a LOOP concurrent with LOCA conditions.	9.i A report exists and concludes that each Class 1E EPS is sized to provide power to its division's safety- related loads subsequent to a LOOP or a LOOP concurrent with LOCA conditions.
	9.ii Inspection will be performed to verify that the rating of each as-built Class 1E EPS bounds the size requirements of the analysis.	9.ii The rating of each as-built Class 1E EPS bounds the size requirements of the analysis.
10. The stored air starting system is capable of starting the Class 1E EPS without requiring replenishment.	10. A test of the as-built Class 1E EPS starting system will be performed.	10. The as-built Class 1E EPS stored air starting system is capable of providing three starts of the as-built Class 1E EPS without requiring replenishment.

Table 2.6.4-1 EPS Systems Inspections, Tests, Analyses, and Acceptance Criteria (Sheet 4 of 10)

Design Commitment	Inspections, Tests, Analyses	Acceptance Criteria
11. The Class 1E EPS engine combustion air intake is separated from the engine exhaust.	11. Inspection of the as-built Class 1E EPS engine will be performed.	11. The as-built Class 1E EPS engine combustion air intake is separated from the as-built engine exhaust.
12.a Independence is maintained between each of the four Class 1E EPSs.	12.a Test will be performed on the as-built Class 1E EPSs by providing a test signal in only one division at a time.	12.a The test signal exists in the as-built Class 1E EPS division under test.
12.b The Class 1E EPSs are located in separate rooms in the PS/B.	12.b Inspection of the as-built Class 1E EPSs will be performed.	12.b The as-built Class 1E EPSs are located in separate rooms in the PS/B.
13. Each Class 1E EPS is capable of providing power at the set voltage and frequency to its Class 1E 6.9kV bus within 100 seconds of receiving a start signal.	13. A test will be performed to verify that each as-built Class 1E EPS can reach set voltage and frequency within 100 seconds of receiving a start signal.	13. The as-built Class 1E EPS reaches the set voltage and frequency within 100 seconds of receiving a start signal.
14.a The ECCS actuation signal starts the Class 1E EPSs.	14.a A test will be performed to verify that the simulated ECCS actuation signal starts the as-built Class 1E EPSs.	14.a The simulated ECCS actuation signal starts the as-built Class 1E EPSs.
14.b Each Class 1E EPS circuit breaker automatically closes and loads are shed if its respective division Class 1E medium voltage bus is de-energized.	14.b A test will be performed to verify operation of each as-built Class 1E EPS circuit breaker and shedding of loads.	14.b Each as-built Class 1E EPS circuit breaker automatically closes and loads are shed if its respective division Class 1E medium voltage bus is de-energized.
14.c After the Class 1E EPS circuit breaker closes, the safety-related loads on the same division Class 1E buses are started in sequence by the ECCS load sequencer.	14.c A test will be performed to verify operation that after the Class 1E EPS circuit breaker closes, the as-built safety-related loads on the same division Class 1E buses are started in sequence by the ECCS load sequencer.	14.c After the Class 1E EPS circuit breaker closes, the as-built safety-related loads on the same division Class 1E buses are started in sequence by the ECCS load sequencer.
15.a A loss of power to a Class1E bus initiates an automatic start of the respective Class 1E EPS, load shedding of connected loads, and closing of the Class 1E EPS circuit breaker.	15.a A test will be performed to verify operation of the respective Class 1E EPS upon a loss of power to the as-built Class 1E bus.	15.a A loss of power to the as-built Class 1E bus initiates an automatic start of the respective as-built Class 1E EPS, load shedding of connected loads, and closing of the as-built Class 1E EPS circuit breaker.

Table 2.6.4-1 EPS Systems Inspections, Tests, Analyses, and Acceptance Criteria (Sheet 5 of 10)

Design Commitment	Inspections, Tests, Analyses	Acceptance Criteria
15.b After the closing of the Class 1E EPS circuit breaker, the LOOP sequencer sequentially starts the required safety-related loads.	15.b A test will be performed to verify operation of the LOOP sequencer after the closing of the as-built Class 1E EPS circuit breaker.	15.b After the closing of the as-built Class 1E EPS circuit breaker, the LOOP sequencer sequentially starts the required safety-related loads.
16. All Class 1E EPS protection systems, except for overspeed, generator differential current, and high exhaust gas temperature, are bypassed when the Class 1E EPS is started by an ECCS actuation signal.	16. A test will be performed to verify that the as-built Class 1E EPS protection systems, except for overspeed, generator differential current, and high exhaust gas temperature, are bypassed when the Class 1E EPS is started by an ECCS actuation signal.	16. The as-built Class 1E EPS protection systems, except for overspeed, generator differential current, and high exhaust gas temperature, are bypassed when the Class 1E EPS is started by an ECCS actuation signal.
17. The Class 1E EPSs are capable of responding to an automatic start signal when running for test purposes.	17. A test will be performed to verify that the as-built Class 1E EPSs are capable of responding to an automatic start signal while in the test mode.	17. The as-built Class 1E EPSs are capable of responding to an automatic start signal when running for test purposes.
18. Controls are provided in the MCR and the Class 1E EPS room to start and stop each Class 1E EPS.	18. Tests will be performed on each as-built Class 1E EPS using the controls in the as-built MCR and the Class 1E EPS room.	18. Controls in the as-built MCR and the Class 1E EPS room start and stop each Class 1E EPS.
19. The functional arrangement of the Class 1E EPS fuel oil storage and transfer system and Class 1E EPS ventilation/cooling air intake and exhaust system are as described in the Design Description of Subsection 2.6.4.2.	19. Inspection of the functional arrangement of the as-built Class 1E EPS fuel oil storage and transfer system and Class 1E EPS ventilation/cooling air intake and exhaust system will be performed.	19. The as-built onsite Class 1E EPS fuel oil storage and transfer system and Class 1E EPS ventilation/cooling air intake and exhaust system conform to the functional arrangement as described in the Design Description of Subsection 2.6.4.2.
20. Deleted	20. Deleted	20. Deleted

Table 2.6.4-1 EPS Systems Inspections, Tests, Analyses, and Acceptance Criteria (Sheet 6 of 10)

Design Commitment	Inspections, Tests, Analyses	Acceptance Criteria
21. Each fuel oil transfer pump transfers fuel oil from the fuel oil storage tank to the Class 1E EPS day tank at a flow rate to support Class 1E EPS operation at continuous rated load while simultaneously increasing day tank level. Sufficient transfer pump NPSH is maintained under all design conditions.	21.a.i Analyses of each Class 1E EPS FOS transfer pump will be performed to determine the required flow rate to support Class 1E EPS operation at continuous rated load while simultaneously increasing day tank level.	21.a.i A report exists and concludes that each FOS transfer pump is sized to transfer fuel oil from the fuel oil storage tank to the as-built Class 1E EPS day tank, at a flow rate to support Class 1E EPS operation at continuous rated load while simultaneously increasing day tank level.
	21.a.ii A test of each division of the as-built Class 1E EPS FOS will be performed to verify that each fuel oil transfer pump flow rate bounds the analysis.	21.a.ii Each as-built Class 1E EPS FOS transfer pump flow rate bounds the requirements defined in the analyses.
	21.b Tests to measure the as-built Class 1E EPS FOS transfer pump suction pressure will be performed. Inspections and analysis to determine NPSH available to each Class 1E EPS FOS transfer pump will be performed. The analysis will consider vendor test results of required NPSH and the effects of: - pressure losses for pump inlet piping and components, - suction from the fuel oil storage tank fuel oil level at the minimum value.	21.b A report exists and concludes that the NPSH available to each Class 1E as-built EPS FOS transfer pump is greater than the NPSH required.
22. Each Class 1E EPS FOS day tank's capacity is sufficient to provide fuel oil for 1.5 hours of EPS operation at rated load.	22.i Analyses of each Class 1E EPS FOS will be performed to determine the required day tank capacity to provide fuel oil for 1.5 hours of EPS operation at rated load.	22.i A report exists and concludes that each Class 1E EPS FOS day tank's capacity is sufficient to provide fuel oil for 1.5 hours of EPS operation at rated load.

Table 2.6.4-1 EPS Systems Inspections, Tests, Analyses, and Acceptance Criteria (Sheet 7 of 10)

Design Commitment	Inspections, Tests, Analyses	Acceptance Criteria
	22.ii Inspection of the as-built FOS day tank will be performed to verify that the tank capacity bounds the analysis.	22.ii The as-built FOS day tank's capacity bounds the analyses.
23. Alarms identified in Subsection 2.6.4.2 are provided in the MCR.	23. Inspection will be performed for retrievability of the alarms identified in Subsection 2.6.4.2 in as-built the MCR.	23. Alarms identified in Subsection 2.6.4.2 can be retrieved in the as-built MCR.
24. The fuel oil transfer pump starts automatically on a fuel oil day tank low level signal and stops automatically on a fuel oil day tank high-level signal.	24. A test will be performed on the as-built fuel oil storage and transfer system by providing a simulated fuel oil day tank level test signal testing the fuel oil transfer pump.	24. The as-built fuel oil transfer pump starts automatically on a fuel oil day tank low level signal and stops automatically on a fuel oil day tank high-level signal.
25. The fuel oil transfer pumps are powered from their respective Class 1E division.	25. A test will be performed on the as-built fuel transfer pumps by providing a simulated test signal in each Class 1E division.	25. The results of the test conclude that a simulated test signal exists at the as-built fuel oil transfer pumps when the assigned Class 1E division is provided a test signal.
26.a.i The ASME Code Section III components of the EPS support systems, identified in Table 2.6.4-2, are fabricated, installed, and inspected in accordance with ASME Code Section III requirements.	26.a.i Inspection of the as-built ASME Code Section III components of the EPS support systems, identified in Table 2.6.4-2, will be performed.	26.a.i The ASME Code Section III data report(s) (certified, when required by ASME Code) and inspection reports (including N-5 Data Reports where applicable) exist and conclude that the as-built ASME Code Section III components of the EPS support systems, identified in Table 2.6.4-2, are fabricated, installed, and inspected in accordance with ASME Code Section III requirements.

Table 2.6.4-1 EPS Systems Inspections, Tests, Analyses, and Acceptance Criteria (Sheet 8 of 10)

Design Commitment	Inspections, Tests, Analyses	Acceptance Criteria
26.a.ii The ASME Code Section III components of the EPS support systems, identified in Table 2.6.4-2, are reconciled with the design requirements.	26.a.ii A reconciliation analysis of the components identified in Table 2.6.4-2 using as-designed and as-built information and ASME Code Section III design report(s) (NCA-3550) will be performed.	26.a.ii The ASME Code Section III design report(s) (certified, when required by ASME Code) exist and conclude that design reconciliation has been completed in accordance with ASME Code, for the as-built ASME Code Section III components of the EPS support systems identified in Table 2.6.4-2. The report documents the results of the reconciliation analysis.
26.b.i The ASME Code Section III piping of the EPS support systems, including supports, identified in Table 2.6.4-2, is fabricated, installed, and inspected in accordance with ASME Code Section III requirements.	26.b.i Inspection of the as-built ASME Code Section III piping of the EPS support systems, including supports, identified in Table 2.6.4-2, will be performed.	26.b.i The ASME Code Section III data report(s) (certified, when required by ASME Code) and inspection reports (including N-5 Data Reports where applicable) exist and conclude that the as-built ASME Code Section III piping of the EPS support systems, including supports, identified in Table 2.6.4-2, is fabricated, installed, and inspected in accordance with ASME Code Section III requirements.
26.b.ii The ASME Code Section III piping of the of the EPS support systems, including supports, identified in Table 2.6.4-2, is reconciled with the design requirements.	26.b.ii A reconciliation analysis of the piping of the EPS support systems, including supports, identified in Table 2.6.4-2, using as-designed and as-built information and ASME Code Section III design report(s) (NCA-3550) will be performed.	26.b.ii The ASME Code Section III design report(s) (certified, when required by ASME Code) exist and conclude that design reconciliation has been completed in accordance with ASME Code, for the as-built ASME Code Section III piping of the EPS support systems, including supports, identified in Table 2.6.4-2. The report documents the results of the reconciliation analysis.

Table 2.6.4-1 EPS Systems Inspections, Tests, Analyses, and Acceptance Criteria (Sheet 9 of 10)

Design Commitment	Inspections, Tests, Analyses	Acceptance Criteria
27.a Pressure boundary welds in ASME Code Section III components, identified in Table 2.6.4-2, meet ASME Code Section III requirements for non-destructive examination of welds.	27.a Inspection of the as-built pressure boundary welds in ASME Code Section III components identified in Table 2.6.4-2, will be performed in accordance with the ASME Code Section III.	27.a The ASME Code Section III code reports exist and conclude that the ASME Code Section III requirements are met for non-destructive examination of the as-built pressure boundary welds in ASME Code Section III components identified in Table 2.6.4-2.
27.b Pressure boundary welds in ASME Code Section III piping, identified in Table 2.6.4-2, meet ASME Code Section III requirements for non-destructive examination of welds.	27.b Inspection of the as-built pressure boundary welds in ASME Code Section III piping identified in Table 2.6.4-2, will be performed in accordance with the ASME Code Section III.	27.b The ASME Code Section III code reports exist and conclude that the ASME Code Section III requirements are met for non-destructive examination of the as-built pressure boundary welds in ASME Code Section III piping identified in Table 2.6.4-2.
28. Deleted	28. Deleted	28. Deleted
29. Each fuel oil storage tank provides a seven day supply of fuel oil to its respective Class 1E EPS while operating at rated load.	29.i Analyses will be performed to determine the required fuel oil storage tank volume to provide a seven day supply of fuel oil to its respective Class 1E EPS while operating at rated load.	29.i A report exists and concludes that each fuel oil storage tank for the Class 1E EPS provides a seven day supply of fuel oil to its respective Class 1E EPS while operating at rated load.
	29.ii Inspection will be performed to verify that the capacity of the as-built fuel oil storage tank bounds the analyses.	29.ii The as-built fuel oil storage tank capacity bounds the analyses.
30. Each lubrication oil tank provides a seven day supply of lubrication oil to its respective Class 1E EPS.	30.i Analyses will be performed to determine the required lubricating oil tank volume to provide a seven day supply of lubricating oil to its respective Class 1E EPS.	30.i A report exists and concludes that each lubrication oil tank for the Class 1E EPS provides a seven day supply of lubrication oil to its respective Class 1E EPS.
	30.ii Inspection will be performed to verify that the as-built lubricating oil tank volume bounds the analyses.	30.ii The as-built lubricating oil tank volume bounds the analyses.

Table 2.6.4-1 EPS Systems Inspections, Tests, Analyses, and Acceptance Criteria (Sheet 10 of 10)

Design Commitment	Inspections, Tests, Analyses	Acceptance Criteria
31. Each main shaft driven lubrication oil pump circulates lubrication oil to the engine during EPS operation.	31. Inspection of each as-built main shaft driven lubrication oil pump will be performed.	31. Each as-built main shaft driven lubrication oil pump is designed to circulate lubrication oil to the engine during EPS operation.
32. Each division of the Class 1E EPS combustion air intake and exhaust system is capable of supplying combustion air to the EPS and of disposing exhaust gases of the EPS when operating at 110% of name plate rating.	32. A test of each division of the as-built Class 1E EPS at 110% of name plate rating will be performed.	32. Each division of the as-built Class 1E EPS combustion air intake and exhaust system is capable of supplying combustion air to the EPS and of disposing exhaust gases of the EPS when operating at 110% of name plate rating.

Table 2.6.4-2 EPS Support Systems Equipment and Piping Characteristics

Equipment or Pipe Line Name	ASME Code Section III Class	Seismic Category
EPS fuel oil storage tanks	3	I
EPS fuel oil transfer pump suction lines from EPS fuel oil storage tank to EPS fuel oil transfer pumps	3	I
EPS fuel oil transfer pump suction line outlet check valves	3	I
EPS fuel oil transfer pump suction line isolation valves	3	I
EPS fuel oil transfer pumps	3	I
EPS fuel oil transfer pump discharge lines up to EPS fuel oil day tank	3	I
EPS fuel oil transfer pump discharge line check valves	3	I
EPS fuel oil transfer pump discharge line isolation valves	3	I
EPS fuel oil day tanks	3	I
EPS fuel oil day tank outlet lines up to EPS	3	I
EPS fuel oil day tank outlet valves	3	I
EPS starting system air compressor discharge lines up to air supply header	3	I
EPS starting system air compressor discharge line isolation valves	3	I
EPS starting system air supply headers	3	I
EPS starting system air supply header outlet lines up to air receiver	3	I
EPS starting system air supply header outlet line isolation valves	3	I
EPS starting system air receiver inlet check valves	3	I
EPS starting system air receivers	3	I
EPS starting system air receiver relief valves	3	I
EPS starting system air receiver outlet lines up to air starting unit	3	I
EPS starting system air start valves	3	I
EPS starting system air start pilot valves	3	I
EPS starting system air starting unit outlet lines up to air starter	3	I
EPS lubrication system main oil pumps	-	I
EPS lubrication system oil coolers	-	I
EPS lubrication system reduction gear reservoirs	-	I
EPS lubrication system main oil filters	-	I
EPS lubrication system main lube oil strainers	-	I
EPS lubrication system piping, fittings and valves	-	I
EPS combustion air intake and exhaust system intake silencers	-	I
EPS combustion air intake and exhaust system turbine exhaust silencers	-	I
EPS combustion air intake and exhaust system piping	-	I

2.6.5 Alternate AC (AAC) Power Source

2.6.5.1 AAC Design Description

Two AAC power sources are provided to supply ac power in case there is a complete loss of offsite power (LOOP) and loss of Class 1E EPSs. AAC power sources supply power to loads required to bring and maintain the plant in a safe shutdown condition for a station blackout (SBO) condition. AAC power sources also provide power to the 6.9kV permanent buses during a LOOP condition. The AAC sources and their connections to Class 1E 6.9kV buses and to non-Class 1E 6.9kV permanent buses are shown on Figure 2.6.1-1. These AAC power sources are non-Class 1E and non-seismic. The two AAC power sources are redundant in that only one AAC power source is required to meet SBO requirements.

1. The functional arrangement of the AAC power sources is as described in the Design Description of Subsection 2.6.5.1.

2. The AAC power sources are located in separate dedicated rooms.

3. Each AAC power source is isolated from the Class 1E power supply systems by a non-Class 1E disconnect switch and a Class 1E circuit breaker connected in series.

4. The Class 1E circuit breakers for the AAC power sources in Class 1E medium voltage switchgear are connected to disconnect switches (non-Class 1E) in selector circuits.

5. Separate and independent fuel supply systems and onsite fuel storage tanks are provided for Class 1E EPSs and AAC power sources.

6. The AAC power sources can be started and connected manually to onsite Class 1E medium voltage buses within 60 minutes during SBO conditions.

7. The AAC power sources fuel oil storage tanks have enough fuel capacity to supply power to the required SBO loads for 8 hours.

8. Controls exist in the MCR to start, stop and synchronize the AAC power sources.

9. Each AAC power source is capable of providing power at the set voltage and frequency to the non-Class 1E 6.9kV buses after receiving a start signal.

10. Each AAC power source status and the breaker status of each Class 1E 6.9kV breaker for the AAC power sources are displayed in the MCR.

11. The functional arrangement of the AAC fuel oil storage and transfer system is as described in the Design Description of Subsection 2.6.5.2.

12. Deleted

13. The two AAC power sources are each sized to meet load requirements for SBO and LOOP conditions. The size of the AAC power source is different than the Class 1E EPSs.

14. The two AAC power sources have a diverse starting system from the Class 1E EPSs.

2.6.5.2 AAC Fuel Oil Storage and Transfer Systems (FOS) Design Description

Each AAC power source is provided with dedicated fuel oil supply system, fuel oil day tank and storage tank:

- The AAC FOSs are non safety-related.
- Each AAC fuel oil day tank is located inside the associated AAC power source room in the PS/B.

2.6.5.3 Inspections, Tests, Analyses, and Acceptance Criteria

Table 2.6.5.1-1 describes the ITAAC for the AAC power source.

Table 2.6.5-1 AAC Systems Inspections, Tests, Analyses, and Acceptance Criteria (Sheet 1 of 3)

Design Commitment	Inspections, Tests, Analyses	Acceptance Criteria
1. The functional arrangement of the AAC power sources is as described in the Design Description of Subsection 2.6.5.1.	1. Inspection of the functional arrangement of the as-built AAC power sources will be performed.	1. The as-built AAC power sources conform to the functional arrangement as described in the Design Description of Subsection 2.6.5.1.
2. The AAC power sources are located in separate dedicated rooms.	2. Inspection of the location of the as-built AAC power sources will be performed.	2. The as-built AAC power sources are located in separate dedicated rooms.
3. Each AAC power source is isolated from the Class 1E power supply systems by a non-Class 1E disconnect switch and a Class 1E circuit breaker connected in series.	3. Inspection of the as-built non-safety disconnect switch and Class 1E circuit breaker between each AAC power source and the emergency Class 1E power supply systems will be performed.	3. Each as-built AAC power source is isolated from the as-built Class 1E power supply systems by a non-safety disconnect switch and a Class 1E circuit breaker connected in series.
4. The Class 1E circuit breakers for the AAC power sources in Class 1E medium voltage switchgear are connected to disconnect switches (non-Class 1E) in selector circuits.	4. Inspection of the as-built Class 1E circuit breakers for the AAC power sources in the Class 1E medium voltage switchgear which are connected to disconnect switches (non-Class 1E) in selector circuits will be performed.	4. The as-built Class 1E circuit breakers for the AAC power sources in the Class 1E medium voltage switchgear are connected to disconnect switches (non-Class 1E) in selector circuits.
5. Separate and independent fuel supply systems and onsite fuel storage tanks are provided for Class 1E EPSs and AAC power sources.	5. Inspection of the as-built fuel supply systems and onsite fuel storage tanks for the Class 1E EPSs and the AAC power sources will be performed.	5. Separate and independent fuel supply systems and onsite fuel storage tanks are provided for the as-built Class 1E EPSs and the AAC power sources.
6. The AAC power sources can be started and connected manually to onsite Class 1E medium voltage buses within 60 minutes during SBO conditions.	6. A test will be performed to verify that the as-built AAC power sources can be started and connected manually to the as-built onsite Class 1E medium voltage buses within 60 minutes during simulated SBO conditions.	6. The as-built AAC power sources can be started and connected manually to the as-built onsite Class 1E medium voltage buses within 60 minutes during simulated SBO conditions.
7. The AAC power sources fuel oil storage tanks have enough fuel capacity to supply power to the required SBO loads for 8 hours.	7.i Analyses will be performed to determine the required AAC power sources fuel oil storage tank capacity to supply power to the required SBO loads for 8 hours.	7.i A report exists and concludes that the AAC power sources have enough fuel oil storage tank capacity to supply power to the required SBO loads for 8 hours.

Table 2.6.5-1 AAC Systems Inspections, Tests, Analyses, and Acceptance Criteria (Sheet 2 of 3)

Design Commitment	Inspections, Tests, Analyses	Acceptance Criteria
	7.ii Inspection of each as-built AAC power source fuel oil storage tank will be performed to verify that the fuel capacity bounds the analyses.	7.ii Each as-built AAC power source fuel oil storage tank has fuel capacity that bounds the analyses.
8. Controls exist in the MCR to start, stop and synchronize the AAC power sources.	8. Test will be performed on the as-built AAC power sources using the controls in the as-built MCR.	8. Controls in the as-built MCR start, stop and synchronize the as-built AAC power sources.
9. Each AAC power source is capable of providing power at the set voltage and frequency to the non-Class 1E 6.9kV buses after receiving a start signal.	9. A test will be performed to verify that the as-built AAC power source can provide power at the set voltage and frequency to the non-Class 1E 6.9kV buses.	9. Each as-built AAC power source can provide power at the set voltage and frequency to the non-Class 1E 6.9kV buses after receiving a start signal.
10. Each AAC power source status and the breaker status of each Class 1E 6.9kV breaker for the AAC power sources are displayed in the MCR.	10. Inspection of the AAC power source status indications in the as-built MCR will be performed.	10. Each as-built AAC power source status and the breaker status of each Class 1E 6.9kV breaker for the AAC power sources are displayed in the as-built MCR.
11. The functional arrangement of the AAC fuel oil storage and transfer system is as described in the Design Description of Subsection 2.6.5.2.	11. Inspection of the functional arrangement of the as-built AAC fuel oil storage and transfer system will be performed.	11. The as-built AAC fuel oil storage and transfer system conforms to the functional arrangement as described in the Design Description of Subsection 2.6.5.2.
12. Deleted	12. Deleted	12. Deleted
13. The two AAC power sources are each sized to meet the load requirements for SBO and LOOP conditions. The size of the AAC power source is different than the Class 1E EPSs.	13.i Analyses will be performed to verify the AAC power sources are each sized to meet load requirements for SBO and LOOP conditions.	13.i A report exists and concludes that the two AAC power sources are each sized to meet load requirements for SBO and LOOP conditions.
	13.ii Inspection will be performed to verify that the ratings of the as-built AAC power sources bound the analyses.	13.ii The ratings of the two as-built AAC power sources bound the analyses.

Table 2.6.5-1 AAC Systems Inspections, Tests, Analyses, and Acceptance Criteria (Sheet 3 of 3)

Design Commitment	Inspections, Tests, Analyses	Acceptance Criteria
	13.iii Inspection will be performed to verify that the size of the as-built AAC power sources is different than the as-built Class 1E EPSs.	13.iii The size of the as-built AAC power sources is different than the as-built Class 1E EPSs.
14 The two AAC power sources have a diverse starting mechanism from the Class 1E EPSs.	14 Inspection of the as-built starting mechanisms for the Class 1E EPSs and the AAC power sources will be performed.	14 Diverse starting mechanisms are provided for the as-built Class 1E EPSs and the as-built AAC power sources.

2.6.6 Plant Lighting Systems

2.6.6.1 Design Description

The plant lighting systems include normal and emergency lighting systems. The plant lighting systems are non safety-related and non-Class 1E.

The emergency lighting system includes normal/emergency (N/E) lighting system, emergency lighting system being powered by the Class 1E power system, and self-contained battery pack emergency lighting system. Emergency lighting powered by the Class 1E power system is provided in the following areas:

- MCR
- Remote shutdown consoles
- Class 1E emergency generator rooms
- Class 1E switchgear, motor control center, Class 1E uninterruptible power supply (UPS) panels
- Battery and battery charger rooms
- Access and egress routes to the remote shutdown consoles

The self-contained battery pack emergency lighting system is provided in areas where emergency operations are performed, and safe ingress and egress of personnel are required during emergencies.

1. Deleted

2. The functional arrangement of the emergency lighting system is as described in the Design Description of Subsection 2.6.6.1.

3. The normal/emergency lighting system is powered from the non-Class 1E 480 V permanent buses.

4. The emergency lighting system powered by the Class 1E power system in the MCR and remote shutdown console room is powered from the redundant Class 1E dc power systems.

5. Supports for the emergency lighting system fixtures powered by Class 1E power system meet seismic Category I requirements.

6. The self-contained battery pack emergency lighting system is normally powered from the ac power system and powered from self-contained battery packs if normal ac power is lost.

7. The self-contained battery pack units provide illumination of at least 0.5 foot-candles at the floor level for 8-hours.

8. The emergency lighting powered by the Class 1E power system in the MCR and at the remote shutdown consoles provides equal to or greater than 10 foot-candles for at least 8 hours.

2.6.6.2 Inspections, Tests, Analyses, and Acceptance Criteria

Table 2.6.6-1 describes the ITAAC for the plant lighting systems.

Table 2.6.6-1 Plant Lighting Systems Inspections, Tests, Analyses, and Acceptance Criteria (Sheet 1 of 2)

Design Commitment	Inspections, Tests, Analyses	Acceptance Criteria
1. Deleted	1. Deleted	1. Deleted
2. The functional arrangement of the emergency lighting system is as described in the Design Description of Subsection 2.6.6.1.	2. Inspection of the functional arrangement of the as-built emergency lighting system will be performed.	2. The as-built emergency lighting system conforms to the functional arrangement described in the Design Description Subsection 2.6.6.1.
3. The normal/emergency lighting system is powered from the non-Class 1E 480V permanent buses.	3. Inspection of the as-built normal/emergency lighting system will be performed.	3. The as-built normal/emergency lighting system is capable of being powered from the non-Class 1E 480V permanent buses.
4. The emergency lighting system powered by the Class 1E power system in the MCR and remote shutdown console room is powered from redundant Class 1E dc power systems.	4. Inspection of the as-built emergency lighting system powered by the Class 1E power system in the as-built MCR and remote shutdown console room will be performed.	4. The as-built emergency lighting system powered by the Class 1E power system in the as-built MCR and remote shutdown console room is powered from redundant Class 1E dc power systems.
5. Supports for the emergency lighting system fixtures powered by Class 1E power system meet seismic Category I requirements.	5.i Inspections will be performed to verify that the as-built supports for the as-built emergency lighting system fixtures powered by Class 1E power system are located in a seismic Category I structure.	5.i The as-built supports for the as-built emergency lighting system fixtures powered by Class 1E power system are located in a seismic Category I structure.
	5.ii Type tests, analysis, or a combination of type tests and analyses of the supports for the emergency lighting system fixtures powered by Class 1E power system will be performed using analytical assumptions, or will be performed under conditions, which bound the seismic design basis requirements.	5.ii A report exists and concludes that the supports for the emergency lighting system fixtures powered by Class 1E power system meet seismic Category I requirements.
	5.iii Inspections and analyses will be performed to verify that the as-built supports including anchorages for the as-built emergency lighting system fixtures powered by Class 1E power system are seismically bounded by the tested or analyzed conditions.	5.iii A report exists and concludes that the as-built supports including anchorages for the as-built emergency lighting system fixtures powered by Class 1E power system are seismically bounded by the tested or analyzed conditions.

Table 2.6.6-1 Plant Lighting Systems Inspections, Tests, Analyses, and Acceptance Criteria (Sheet 2 of 2)

Design Commitment	Inspections, Tests, Analyses	Acceptance Criteria
6. The self-contained battery pack emergency lighting system is normally powered from the ac power system and powered from self-contained battery packs if the normal ac power is lost.	6. An inspection of the as-built self-contained battery pack emergency lighting system will be performed.	6. The as-built self-contained battery pack emergency lighting system is normally powered from the ac power system and powered from self-contained battery packs if the normal ac power is lost.
7. The self-contained battery pack units provide illumination of at least 0.5 foot-candles at the floor level for at least 8-hours.	7. A test of the as-built self-contained battery pack units will be performed.	7. The as-built self-contained battery pack units provide illumination of at least 0.5 foot-candles at the floor level for at least 8-hours.
8. The emergency lighting powered by the Class 1E power system in the MCR and at the remote shutdown consoles provides equal to or greater than 10 foot-candles for at least 8 hours.	8. A test of the emergency lighting powered by the Class 1E power system in the MCR and at the remote shutdown consoles will be performed.	8. The as-built emergency lighting powered by the Class 1E power system in the MCR and at the remote shutdown consoles provides illumination levels in those areas equal to or greater than 10 foot-candles for at least 8 hours.

2.6.7 Grounding and Lightning Protection System

2.6.7.1 Design Description

The grounding and lightning protection system consists of the following:

- Station ground grid
- System neutral grounding
- Equipment grounding
- I&C grounding
- Lightning protection

The station ground grid consists of buried, interconnected bare copper conductors and ground rods forming a plant ground grid matrix.

1. The following grounding systems connect to the station ground grid:

    a. The system neutral grounding of the MG, MT, UATs, RATs, SSTs, Class 1E EPSs and AAC power sources.

    b. The equipment grounding for equipment enclosures, raceways, metal structures, metallic tanks, and the ground bus of switchgear, load centers, MCCs, switchboards, panel boards and control cabinets.

    c. The I&C grounding which includes a separate radial grounding system consisting of isolated instrumentation ground buses and insulated cables.

2. Lightning protection system is provided for standard design buildings and exposed structures.

2.6.7.2 Inspections, Tests, Analyses, and Acceptance Criteria

Table 2.6.7-1 describes the ITAAC for the grounding and lightning protection system.

Table 2.6.7-1 Grounding and Lightning Protection System Inspections, Tests, Analyses, and Acceptance Criteria

Design Commitment	Inspections, Tests, Analyses	Acceptance Criteria
1. The following grounding systems connect to the station grounding grid: a. the system neutral grounding of the MG, MT, UATs, RATs, SSTs, Class 1E EPSs and AAC power sources b. the equipment grounding for equipment enclosures, raceways, metal structures, metallic tanks, and the ground bus of switchgear, load centers, MCCs, switchboards and control cabinets. c. the I&C grounding which includes a separate radial grounding system consisting of isolated instrumentation ground buses and insulated cables.	1. An inspection of the as-built grounding system will be performed to verify: a. the system neutral grounding connects to station grounding grid b. the equipment grounding connects to station grounding grid c. the I&C grounding connects to station grounding grid and includes a separate radial grounding system consisting of isolated instrumentation ground buses and insulated cables.	1. The following as-built grounding systems connect to the station grounding grid: a. the system neutral grounding of the MG, MT, UATs, RATs, SST, Class 1E EPSs and AAC power sources b. the equipment grounding for equipment enclosures, raceways, metal structures, metallic tanks, and the ground bus of switchgear, load centers, MCCs, switchboards, and control cabinets. c. the I&C grounding which includes a separate radial grounding system consisting of isolated instrumentation ground buses and insulated cables.
2. Lightning protection system is provided for standard design buildings and exposed structures.	2. Inspection of the as-built lightning protection system will be performed.	2. The as-built lightning protection system for standard design buildings and exposed structures exist.

2.6.8 Containment Electrical Penetration Assemblies (EPAs)

2.6.8.1 Design Description

1. Electric power, control and instrumentation circuits pass through the containment vessel boundary wall via electrical penetration assemblies (EPAs).

2. Each EPA can withstand seismic design basis loads without loss of safety function.

3. Separation is provided between redundant divisions of EPAs containing Class 1E circuits and between EPAs containing Class 1E circuits and EPAs containing non-Class 1E circuits.

4. Separate penetrations are provided for medium voltage circuits, low voltage circuits, control power circuits, and instrumentation signal circuits.

5. The primary circuit protection device for each EPA circuit is sized to ensure electrical integrity of the circuit for postulated overload and short-circuit conditions.

6. The back up circuit protection device for each EPA circuit is sized to ensure mechanical integrity of the EPA for postulated overload and short-circuit conditions, during normal and accident conditions.

7. Each EPA as being qualified for a harsh environment can withstand the environmental conditions that would exist before, during, and following a design basis accident without loss of safety function for the time required to perform the safety function.

2.6.8.2 Inspections, Tests, Analyses, and Acceptance Criteria

Table 2.6.8-1 describes the ITAAC for the EPAs.

Table 2.6.8-1 Containment Electrical Penetration Assemblies Inspections, Tests, Analyses, and Acceptance Criteria (Sheet 1 of 2)

Design Commitment	Inspections, Tests, Analyses	Acceptance Criteria
1. The electric power, control and instrumentation circuits pass through the containment vessel boundary wall via electrical penetration assemblies (EPAs).	1. An inspection of the as-built electric power, control and instrumentation circuits that pass through the as-built containment vessel boundary wall will be performed.	1. The as-built electric power, control and instrumentation circuits pass through the as-built containment vessel boundary wall via the as-built EPAs.
2. Each EPA can withstand seismic design basis loads without loss of safety function.	2.i Inspections will be performed to verify that each as-built EPA is located in a seismic Category I structure.	2.i Each as-built EPA is located in a seismic Category I structure.
	2.ii Type tests, analyses, or a combination of type tests and analyses of each EPA will be performed using analytical assumptions, or will be performed under conditions, which bound the seismic design basis requirements.	2.ii A report exists and concludes that each EPA can withstand seismic design basis loads without loss of safety function.
	2.iii Inspections and analyses will be performed to verify that each as-built EPA, including anchorages, is seismically bounded by the tested or analyzed conditions.	2.iii A report exists and concludes that each as-built EPA, including anchorages, is seismically bounded by the tested or analyzed conditions.
3. Separation is provided between redundant divisions of EPAs containing Class 1E circuits and between EPAs containing Class 1E circuits and EPAs containing non-Class 1E circuits.	3. Inspections of the as-built EPAs containing the Class 1E circuits will be performed.	3. Separation is provided in accordance with RG 1.75 between the as-built redundant divisions of EPAs containing the Class 1E circuits and between the as-built EPAs containing the Class 1E circuits and the as-built EPAs containing the non-Class 1E circuits.
4. Separate penetrations are provided for medium voltage circuits, low voltage circuits, control power circuits, and instrumentation signal circuits.	4. An inspection of the as-built penetrations for the medium voltage circuits, low voltage circuits, control power circuits, and instrumentation signal circuits will be performed.	4. The as-built modules for medium voltage power circuits (e.g., 6.9 kV) are in medium voltage power penetrations; modules for low voltage power circuits (e.g., 480 V) are in low voltage power penetrations; modules for control power circuits (e.g., 120/125V) are in control power penetrations and modules for instrumentation signal circuits are in instrumentation penetrations.

Table 2.6.8-1 Containment Electrical Penetration Assemblies Inspections, Tests, Analyses, and Acceptance Criteria (Sheet 2 of 2)

Design Commitment	Inspections, Tests, Analyses	Acceptance Criteria
5. The primary circuit protection device for each EPA circuit is sized to ensure electrical integrity of the circuit for postulated overload and short-circuit conditions.	5.i An analysis will be performed to verify the primary circuit protection device for each EPA circuit is sized to ensure electrical integrity of the circuit for postulated overload and short-circuit conditions.	5.i A report exists and concludes that the primary circuit protection device for each EPA circuit is sized to ensure electrical integrity of the circuit for postulated overload and short-circuit conditions.
	5.ii An inspection will be performed to verify the ratings of the as-built primary circuit protection device for each EPA circuit bound the requirements of the analysis.	5.ii The ratings of the as-built primary circuit protection device for each EPA circuit bound the requirements of the analysis.
6. The back up circuit protection device for each EPA circuit is sized to ensure mechanical integrity of the EPA for postulated overload and short-circuit conditions, during normal and accident conditions.	6.i An analysis will be performed to verify the back up circuit protection device for each EPA circuit is sized to ensure mechanical integrity of the EPA for postulated overload and short-circuit conditions, during normal and accident conditions.	6.i A report exists and concludes that the back up circuit protection device for each EPA circuit is sized to ensure mechanical integrity of the EPA for postulated overload and short-circuit conditions, during normal and accident conditions.
	6.ii An inspection will be performed to verify ratings of the back-up circuit protection device for each as-built EPA circuit bound the requirements of the analysis.	6.ii The ratings of the back-up circuit protection device for each as-built EPA circuit bound the requirements of the analysis.
7. Each EPA as being qualified for a harsh environment can withstand the environmental conditions that would exist before, during, and following a design basis accident without loss of safety function for the time required to perform the safety function.	7.i Type tests or a combination of type tests and analyses using the design environmental conditions or under the conditions which bound the design environmental conditions will be performed on the EPAs located in a harsh environment.	7.i A report exists and concludes that each EPA as being qualified for a harsh environment can withstand the environmental conditions that would exist before, during, and following a design basis accident without loss of safety function for the time required to perform the safety function.
	7.ii Inspection will be performed on each as-built EPA located in a harsh environment.	7.ii Each as-built EPA as being qualified for a harsh environment is bounded by type tests, or a combination of type tests and analyses.

2.7 PLANT SYSTEMS

2.7.1 Power Generation Systems

2.7.1.1 Turbine Generator (T/G)

2.7.1.1.1 Design Description

The T/G is a non safety-related system. The T/G provides capability to convert energy in the main steam to electrical energy at the generator output.

The T/G is located within the T/B, and consists of:

- One double-flow high-pressure turbine
- Three double-flow low pressure turbines
- A generator/exciter
- Two sets of external moisture separator/reheaters
- Associated piping, valves, control system
- Auxiliary subsystems

The main turbine stop valves (MTSVs) and main turbine control valves (MTCVs) are arranged in series at the high-pressure turbine inlet, and control steam flow entering the high-pressure turbine. The reheat stop valves (RSVs) and intercept valves (IVs) are arranged in series in the cross-over pipes at the inlet to the low-pressure turbines (LPTs), and control steam flow to the LPTs. Extraction nonreturn valves are installed in the extraction lines to the feedwater heaters.

1. The functional arrangement of the turbine generator is as described in the Design Description of Subsection 2.7.1.1.1.

2. The LPT rotor integrity is ensured by the combination of design, fracture toughness, tests, and inspections of the rotor to minimize the probability of turbine missile generation.

3.a The main turbine is equipped with a mechanical overspeed trip (MOST) system device which can be used to locally initiate a manual turbine trip.

3.b The electrical overspeed trip (EOST) protection system trips the turbine generator in response to an EOST signal.

4. Controls are provided in the MCR to trip the turbine generator.

5. The MTSVs, MTCVs, RSVs and IVs close in response to a turbine trip signal.

6. The extraction nonreturn valves close in response to a turbine trip signal.

7. A turbine generator trip is initiated in response to a reactor trip.

2.7.1.1.2 Inspections, Tests, Analyses, and Acceptance Criteria

Table 2.7.1.1-1 describes the ITAAC for the T/G.

Table 2.7.1.1-1 Turbine Generator Inspections, Tests, Analyses, and Acceptance Criteria (Sheet 1 of 2)

Design Commitment	Inspections, Tests, Analyses	Acceptance Criteria
1. The functional arrangement of the turbine generator is as described in the Design Description of Subsection 2.7.1.1.1.	1. Inspection of the as-built turbine generator system will be performed.	1. The as-built turbine generator conforms to the functional arrangement as described in the Design Description of Subsection 2.7.1.1.1.
2. The LPT rotor integrity is ensured by the combination of design, fracture toughness, tests, and inspections of the rotor to minimize the probability of turbine missile generation.	2. An inspection of the as-built LPT rotor material properties, turbine rotor and blade designs, pre-service inspection and testing results, and in-service inspection requirements will be performed.	2. The as-built LPT rotor material properties, turbine rotor and blade designs, pre-service inspection and testing results, and in-service inspection requirements meet the requirements of the Turbine Missile Generation Probability Analysis.
3.a The main turbine is equipped with a mechanical overspeed trip (MOST) system device which can be used to locally initiate a manual turbine trip.	3.a A Test will be performed on the as-built main turbine MOST system to verify the manual turbine trip function of the MOST system by using the local turbine trip lever.	3.a The as-built MTSVs, MTCVs, RSVs and IVs close in response to shifting of the local turbine trip lever of the MOST system to trip position.
3.b The electrical overspeed trip (EOST) protection system trips the turbine generator in response to an EOST signal.	3.b A test will be performed on the as-built main turbine EOST system using an actual or simulated EOST signal.	3.b The as-built MTSVs, MTCVs, RSVs and IVs close in response to an actual or simulated EOST signal.
4. Controls are provided in the MCR to trip the turbine generator.	4. Tests will be performed on the as-built turbine generator using controls in the as-built MCR.	4. Controls in the as-built MCR close the MTSVs, MTCVs, RSVs and IVs.
5. The MTSVs, MTCVs, RSVs and IVs close in response to a turbine trip signal.	5. Tests will be performed on the as-built MTSVs, MTCVs, RSVs and IVs using an actual or simulated turbine trip signal.	5. Each MTSV, MTCV, RSV and IV closes within 0.3 seconds of receiving an actual or simulated turbine trip signal.

Table 2.7.1.1-1 Turbine Generator Inspections, Tests, Analyses, and Acceptance Criteria (Sheet 2 of 2)

Design Commitment	Inspections, Tests, Analyses	Acceptance Criteria
6. The extraction nonreturn valves close in response to a turbine trip signal.	6.i Tests will be performed on the as-built extraction nonreturn valves using an actual or simulated turbine trip signal.	6.i The arm of each extraction nonreturn valve moves to the close position in response to an actual or simulated turbine trip signal.
	6.ii Test will be performed on the nonreturn valve actuator to verify the valve actuator response to releasing air from the actuator air cylinder.	6.ii Actuator operation time is within 1.0 second in response to releasing air from air cylinder.
7. A turbine generator trip is initiated in response to a reactor trip.	7. A test of the as-built system will be performed using a simulated test signal.	7. The as-built control logic provides a turbine generator trip in response to a simulated reactor trip signal.

2.7.1.2 Main Steam Supply System (MSS)

2.7.1.2.1 Design Description

The MSS transports steam from the steam generators (SGs) to the main turbine. The MSS also supplies steam to the emergency feedwater pump turbines. The system can dissipate heat generated by the SGs to atmosphere through air-operated main steam relief valves (MSRVs), motor-operated main steam depressurization valves (MSDVs) or spring-loaded main steam safety valves (MSSVs).

The MSS is provided with safety-related main steam isolation valves (MSIVs) and associated main steam bypass isolation valves (MSBIVs) in each main steam line. These valves isolate the secondary side of the SGs to prevent the uncontrolled blowdown of more than one SG and isolate non safety-related portions of the system.

The MSS provides a containment isolation function, as described in Section 2.11.2, of the MSS lines penetrating the containment.

1.a The functional arrangement of the MSS is as described in the Design Description of Subsection 2.7.1.2.1 and in Table 2.7.1.2-1, and as shown in Figure 2.7.1.2-1.

1.b Each mechanical division of the MSS except for piping (Division A&B and C&D pairs) is physically separated from the other divisions with the exception of the MSS in the reactor building exterior and inside the containment so as not to preclude accomplishment of the safety function.

2.a.i The ASME Code Section III components of the MSS, identified in Table 2.7.1.2-2, are fabricated, installed, and inspected in accordance with ASME Code Section III requirements.

2.a.ii The ASME Code Section III components of the MSS identified in Table 2.7.1.2-2 are reconciled with the design requirements.

2.b.i The ASME Code Section III piping of the MSS, including supports, identified in Table 2.7.1.2-3, is fabricated, installed, and inspected in accordance with ASME Code Section III requirements.

2.b.ii The ASME Code Section III piping of the MSS, including supports, identified in Table 2.7.1.2-3 is reconciled with the design requirements.

3.a Pressure boundary welds in ASME Code Section III components, identified in Table 2.7.1.2-2, meet ASME Code Section III requirements for non-destructive examination of welds.

3.b Pressure boundary welds in ASME Code Section III piping, identified in Table 2.7.1.2-3, meet ASME Code Section III requirements for non-destructive examination of welds.

4.a The ASME Code Section III components, identified in Table 2.7.1.2-2, retain their pressure boundary integrity at their design pressure.

4.b The ASME Code Section III piping, identified in Table 2.7.1.2-3, retains its pressure boundary integrity at its design pressure.

5.a The seismic Category I equipment, identified in Table 2.7.1.2-2, can withstand seismic design basis loads without loss of safety function.

5.b The seismic Category I piping, including supports, identified in Table 2.7.1.2-3, can withstand seismic design basis loads without a loss of its safety function.

6.a The Class 1E equipment identified in Table 2.7.1.2-2 as being qualified for a harsh environment can withstand the environmental conditions that would exist before, during, and following a design basis accident without loss of safety function for the time required to perform the safety function.

6.b Class 1E equipment, identified in Table 2.7.1.2-2, is powered from its respective Class 1E division.

6.c Separation is provided between redundant divisions of MSS Class 1E cables, and between Class 1E cables and non-Class 1E cables.

7. Deleted.

8.a Controls are provided in the MCR to open and close the remotely operated valves identified in Table 2.7.1.2-2.

8.b The remotely operated valves identified in Table 2.7.1.2-2 as having PSMS control perform an active safety function after receiving a signal from PSMS.

9.a The motor-operated valves identified in Table 2.7.1.2-2 as having an active safety function perform an active safety function to change position as indicated in the table.

9.b The air-operated valves identified in Table 2.7.1.2-2 as having an active safety function perform an active safety function to change position as indicated in the table.

9.c The check valves, identified in Table 2.7.1.2-2 as having an active safety function perform an active safety function to change position as indicated in the table.

9.d After loss of motive power, the remotely operated valves, identified in Table 2.7.1.2-2, assume the indicated loss of motive power position.

9.e The MSIVs identified in Table 2.7.1.2-2 perform an active safety function to change position as indicated in the table.

10. Alarms and displays identified in Table 2.7.1.2-4 are provided in the MCR.

11. Alarms, displays, and controls identified in Table 2.7.1.2-4 are provided in the RSC.

12. The piping identified in Table 2.7.1.2-3 as designed for leak-before-break (LBB) meets the LBB criteria, or an evaluation is performed of the protection from the dynamic effects of a rupture of the line.

13.a The MSSVs identified in Table 2.7.1.2-2 provide overpressure protection for the secondary side of the steam generators and for pressure boundary components in the MSS.

13.b During design basis events, the MSS limits SG blowdown.

14. The MSIVs and MSBIVs identified in Table 2.7.1.2-2 close within the required response time.

2.7.1.2.2 Inspections, Tests, Analyses, and Acceptance Criteria

Table 2.7.1.2-5 describes the ITAAC for the MSS.

The ITAAC associated with the MSS equipment, components, and piping that comprise a portion of the CIS are described in Table 2.11.2-2 and Table 2.7.1.2-5 Items 8.b and 14.

Table 2.7.1.2-1 Main Steam Supply System Location of Equipment and Piping

System and Components	Location
Main Steam Isolation Valves	Reactor Building
Main Steam Bypass Isolation Valves	Reactor Building
Main Steam Safety Valves	Reactor Building
Main Steam Relief Valves	Reactor Building
Main Steam Depressurization Valves	Reactor Building
Main Steam Relief Valve Block Valves (MSRVBVs)	Reactor Building
Main Steam Drain Line Isolation Valves (MSDIVs)	Reactor Building
Main Steam Check Valves	Reactor Building
Main steam piping in the PCCV	Containment
Piping in the reactor building including branch piping from main steam piping up to and including the following valves; MSIV, MSBIV, MSSV, MSRV, MSDV, MSRVBV, MSDIV	Reactor Building
Branch lines from the main steam piping to the emergency feedwater pump turbine steam isolation valve excluding this valve	Reactor Building
Main steam drain piping located in the reactor building downstream MSDIV and excluding the MSDIV	Reactor Building
MSS piping downstream of MSIV and MSBIV up to and including the first restraint located between the reactor building and the turbine building	Reactor Building
Discharge piping of the MSSV in the reactor building	Reactor Building
Discharge piping of the MSRV and MSDV in the reactor building	Reactor Building

Table 2.7.1.2-2 Main Steam Supply System Equipment Characteristics (Sheet 1 of 2)

Equipment Name	Tag No.	ASME Code Section III Class	Seismic Category I	Remotely Operated Valve	Class 1E/ Qual. For Harsh Envir.	PSMS Control	Active Safety Function	Loss of Motive Power Position
Main Steam Isolation Valves	MSS-SMV-515A,B,C,D	2	Yes	Yes	Yes/Yes	Main steam line isolation Remote Manual	Transfer Closed	Closed
Main Steam Bypass Isolation Valves (air-operated valves)	MSS-HCV-565 MSS-HCV-575 MSS-HCV-585 MSS-HCV-595	2	Yes	Yes	Yes/Yes	Main steam line isolation Remote Manual	Transfer Closed	Closed
Main Steam Safety Valves	MSS-SRV-509A,B,C,D MSS-SRV-510A,B,C,D MSS-SRV-511A,B,C,D MSS-SRV-512A,B,C,D MSS-SRV-513A,B,C,D MSS-SRV-514A,B,C,D	2	Yes	No	-/-	-	Transfer Open Transfer Closed	-
Main Steam Relief Valves	MSS-PCV-515 MSS-PCV-525 MSS-PCV-535 MSS-PCV-545	2	Yes	Yes	Yes/Yes	-	-	Closed
Main Steam Depressurization Valves	MSS-MOV-508A,B,C,D	2	Yes	Yes	Yes/Yes	Remote Manual	Transfer Open Transfer Closed	As Is
Main Steam Relief Valve Block Valves	MSS-MOV-507A,B,C,D	2	Yes	Yes	Yes/Yes	Remote Manual	Transfer Closed	As Is

Table 2.7.1.2-2 Main Steam Supply System Equipment Characteristics (Sheet 2 of 2)

Equipment Name	Tag No.	ASME Code Section III Class	Seismic Category I	Remotely Operated Valve	Class 1E/ Qual. For Harsh Envir.	PSMS Control	Active Safety Function	Loss of Motive Power Position
Main Steam Drain Line Isolation Valves	MSS-MOV-701A,B,C,D	2	Yes	Yes	Yes/Yes	Remote Manual	Transfer Closed	As Is
Main Steam Check Valves	MSS-VLV-516A,B,C,D	3	Yes	No	-/-	-	Transfer Closed	-
Main Steam Line Pressure	MSS-PT-515, 516, 517, 518, 525, 526, 527, 528, 535, 536, 537, 538, 545, 546, 547, 548	-	Yes	-	Yes/No	-	-	-
Turbine Inlet Pressure	MSS-PT-555, 556, 557, 558	-	No	-	Yes/No	-	-	-

Note: Dash (-) indicates not applicable

Table 2.7.1.2-3 Main Steam Supply System Piping Characteristics

Pipe Line Name	ASME Code Section III Class	Leak Before Break	Seismic Category I
Main steam piping in the PCCV	2	Yes	Yes
Piping in the reactor building including branch piping from main steam piping up to and including the following valves; MSIV, MSBIV, MSSV, MSRV, MSDV, MSRVBV, MSDIV	2	No	Yes
Branch lines from the main steam piping to the emergency feedwater pump turbine steam isolation valve excluding this valve	2	No	Yes
Main steam drain piping located in the reactor building downstream MSDIV and excluding the MSDIV	3	No	Yes
MSS piping downstream of MSIV and MSBIV up to and including the first restraint located between the reactor building and the turbine building	3	No	Yes
Discharge piping of the MSSV in the reactor building	3	No	Yes
Discharge piping of the MSRV and MSDV in the reactor building	3	No	Yes

Table 2.7.1.2-4 Main Steam Supply System Equipment Alarms, Displays, and Control Functions

Equipment/Instrument Name	MCR/RSC Alarm	MCR Display	MCR/RSC Control Function	RSC Display
Main Steam Isolation Valves (MSS-SMV-515A, B, C, D)	No	Yes	Yes	Yes
Main Steam Bypass Isolation Valve (MSS-HCV-565, 575, 585, 595)	No	Yes	Yes	Yes
Main Steam Safety Valve (Position Indication) (MSS-SRV-509A,B,C,D MSS-SRV-510A,B,C,D MSS-SRV-511A,B,C,D MSS-SRV-512A,B,C,D MSS-SRV-513A,B,C,D MSS-SRV-514A,B,C,D)	No	Yes	No	Yes
Main Steam Relief Valve (MSS-PCV-515, 525, 535, 545)	No	Yes	Yes	Yes
Main Steam Depressurization Valves (MSS-MOV-508A. B, C, D)	No	Yes	Yes	Yes
Main Steam Relief Valve Block Valves (MSS-MOV-507A, B, C, D)	No	Yes	Yes	Yes
Main Steam Drain Line Isolation Valve (MSS-MOV-701A, B, C, D)	No	Yes	Yes	Yes
Main Steam Line Pressure (MSS-PT-515, 516, 517, 518, 525, 526, 527, 528, 535, 536, 537, 538, 545, 546, 547, 548)	Yes	Yes	No	Yes
Turbine Inlet Pressure (MSS-PT-555, 556, 557, 558)	Yes	Yes	No	Yes

Table 2.7.1.2-5 Main Steam Supply System Inspections, Tests, Analyses, and Acceptance Criteria (Sheet 1 of 9)

Design Commitment	Inspections, Tests, Analyses	Acceptance Criteria
1.a The functional arrangement of the MSS is as described in the Design Description of Subsection 2.7.1.2.1 and in Table 2.7.1.2-1, and as shown in Figure 2.7.1.2-1.	1.a Inspection of the as-built MSS system will be performed.	1.a The as-built MSS system conforms to the functional arrangement as described in the Design Description of Subsection 2.7.1.2.1 and in Table 2.7.1.2-1, and as shown in Figure 2.7.1.2-1.
1.b Each mechanical division of the MSS except for piping (Division A&B and C&D pairs) is physically separated from the other divisions with the exception of the MSS in the reactor building exterior and inside the containment so as not to preclude accomplishment of the safety function.	1.b Inspection and analysis of the as-built MSS will be performed.	1.b A report exists and concludes that each mechanical division of the as-built MSS, except for piping (Division A&B and C&D pairs), is physically separated by spatial separation, barriers, or enclosures with the exception of the MSS in the reactor building exterior and inside the containment, so as to assure that the functions of the safety-related system are maintained.
2.a.i The ASME Code Section III components of the MSS, identified in Table 2.7.1.2-2, are fabricated, installed, and inspected in accordance with ASME Code Section III requirements.	2.a.i Inspection of the as-built ASME Code Section III components of the MSS, identified in Table 2.7.1.2-2, will be performed.	2.a.i The ASME Code Section III data report(s) (certified, when required by ASME Code) and inspection reports (including N-5 Data Reports where applicable) exist and conclude that the as-built ASME Code Section III components of the MSS identified in Table 2.7.1.2-2 are fabricated, installed, and inspected in accordance with ASME Code Section III requirements.
2.a.ii The ASME Code Section III components of the MSS identified in Table 2.7.1.2-2 are reconciled with the design requirements.	2.a.ii A reconciliation analysis of the components identified in Table 2.7.1.2-2 using as-designed and as-built information and ASME Code Section III design report(s) (NCA-3550) will be performed.	2.a.ii The ASME Code Section III design report(s) (certified, when required by ASME Code) exist and conclude that design reconciliation has been completed in accordance with ASME Code, for the as-built ASME Code Section III components of the MSS identified in Table 2.7.1.2-2. The report documents the results of the reconciliation analysis.

Table 2.7.1.2-5 Main Steam Supply System Inspections, Tests, Analyses, and Acceptance Criteria (Sheet 2 of 9)

Design Commitment	Inspections, Tests, Analyses	Acceptance Criteria
2.b.i The ASME Code Section III piping of the MSS, including supports, identified in Table 2.7.1.2-3, is fabricated, installed, and inspected in accordance with ASME Code Section III requirements.	2.b.i Inspection of the as-built ASME Code Section III piping of the MSS, including supports, identified in Table 2.7.1.2-3, will be performed.	2.b.i The ASME code Section III data report(s) (certified, when required by ASME Code) and inspection reports (including N-5 Data Reports where applicable) exist and conclude that the as-built ASME Code Section III piping of the MSS, including supports, identified in Table 2.7.1.2-3 is fabricated, installed, and inspected in accordance with ASME Code Section III requirements.
2.b.ii The ASME Code Section III piping of the MSS, including supports, identified in Table 2.7.1.2-3 is reconciled with the design requirements.	2.b.ii A reconciliation analysis of the piping of the MSS, including supports, identified in Table 2.7.1.2-3, using as-designed and as-built information and ASME Code Section III design report(s) (NCA-3550) will be performed.	2.b.ii The ASME Code Section III design report(s) (certified, when required by ASME Code) exist and conclude that the design reconciliation has been completed in accordance with the ASME Code, for the as-built ASME Code Section III piping of the MSS, including supports, identified in Table 2.7.1.2-3. The report documents the results of the reconciliation analysis.
3.a Pressure boundary welds in ASME Code Section III components, identified in Table 2.7.1.2-2, meet ASME Code Section III requirements for non-destructive examination of welds.	3.a Inspections of the as-built pressure boundary welds in ASME Code Section III components identified in Table 2.7.1.2-2, will be performed in accordance with the ASME Code Section III.	3.a The ASME Code Section III code reports exist and conclude that the ASME Code Section III requirements are met for non-destructive examination of the as-built pressure boundary welds in ASME Code Section III components identified in Table 2.7.1.2-2.
3.b Pressure boundary welds in ASME Code Section III piping, identified in Table 2.7.1.2-3, meet ASME Code Section III requirements for non-destructive examination of welds.	3.b Inspections of the as-built pressure boundary welds in ASME Code Section III piping identified in Table 2.7.1.2-3 will be performed in accordance with the ASME Code Section III.	3.b The ASME Code Section III code reports exist and conclude that the ASME Code Section III requirements are met for non-destructive examination of the as-built pressure boundary welds in ASME Code Section III piping identified in Table 2.7.1.2-3.

Table 2.7.1.2-5 Main Steam Supply System Inspections, Tests, Analyses, and Acceptance Criteria (Sheet 3 of 9)

Design Commitment	Inspections, Tests, Analyses	Acceptance Criteria
4.a The ASME Code Section III components, identified in Table 2.7.1.2-2, retain their pressure boundary integrity at their design pressure.	4.a A hydrostatic test will be performed on the as-built components, identified in Table 2.7.1.2-2, required by the ASME Code Section III to be hydrostatically tested.	4.a ASME Code Data Report(s) exist and conclude that the results of the hydrostatic test of the as-built components identified in Table 2.7.1.2-2 as ASME Code Section III conform to the requirements of the ASME Code Section III.
4.b The ASME Code Section III piping, identified in Table 2.7.1.2-3, retains its pressure boundary integrity at its design pressure.	4.b A hydrostatic test will be performed on the as-built piping, identified in Table 2.7.1.2-3, required by the ASME Code Section III to be hydrostatically tested.	4.b ASME Code Data Report(s) exist and conclude that the results of the hydrostatic test of the as-built piping identified in Table 2.7.1.2-3 as ASME Code Section III conform to the requirements of the ASME Code Section III.
5.a The seismic Category I equipment, identified in Table 2.7.1.2-2, can withstand seismic design basis loads without loss of safety function.	5.a.i Inspections will be performed to verify that the as-built seismic Category I equipment identified in Table 2.7.1.2-2 is located in a seismic Category I structure.	5.a.i The as-built seismic Category I equipment identified in Table 2.7.1.2-2 is located in a seismic Category I structure.
	5.a.ii Type tests, analyses, or a combination of type tests and analyses of seismic Category I equipment identified in Table 2.7.1.2-2 will be performed using analytical assumptions, or will be performed under conditions, which bound the seismic design basis requirements.	5.a.ii A report exists and concludes that the seismic Category I equipment identified in Table 2.7.1.2-2 can withstand seismic design basis loads without loss of safety function.
	5.a.iii Inspections and analyses will be performed to verify that the as-built seismic Category I equipment identified in Table 2.7.1.2-2, including anchorages, is seismically bounded by the tested or analyzed conditions.	5.a.iii A report exists and concludes that the as-built seismic Category I equipment identified in Table 2.7.1.2-2, including anchorages, is seismically bounded by the tested or analyzed conditions.

Table 2.7.1.2-5 Main Steam Supply System Inspections, Tests, Analyses, and Acceptance Criteria (Sheet 4 of 9)

Design Commitment	Inspections, Tests, Analyses	Acceptance Criteria
5.b The seismic Category I piping, including supports, identified in Table 2.7.1.2-3, can withstand seismic design basis loads without a loss of its safety function.	5.b.i Inspections will be performed to verify that the as-built seismic Category I piping, including supports, identified in Table 2.7.1.2-3 is supported by a seismic Category I structure(s).	5.b.i The as-built seismic Category I piping, including supports, identified in Table 2.7.1.2-3 is supported by a seismic Category I structure(s).
	5.b.ii Inspections and analyses will be performed to verify that the as-built seismic Category I piping, including supports, identified in Table 2.7.1.2-3, can withstand seismic design basis loads without a loss of its safety function.	5.b.ii A report exists and concludes that the as-built seismic Category I piping, including supports, identified in Table 2.7.1.2-3, can withstand seismic design basis loads without a loss of its safety function.
6.a The Class 1E equipment identified in Table 2.7.1.2-2 as being qualified for a harsh environment can withstand the environmental conditions that would exist before, during, and following a design basis accident without loss of safety function for the time required to perform the safety function.	6.a.i Type tests or a combination of type tests and analyses using the design environmental conditions, or under the conditions which bound the design environmental conditions, will be performed on the Class 1E equipment identified in Table 2.7.1.2-2 as being qualified for a harsh environment.	6.a.i A report exists and concludes that the Class 1E equipment identified in Table 2.7.1.2-2 as being qualified for a harsh environment can withstand the environmental conditions that would exist before, during, and following a design basis accident without loss of safety function for the time required to perform the safety function.
	6.a.ii Inspection will be performed of the as-built Class 1E equipment identified in Table 2.7.1.2-2 as being qualified for a harsh environment and the associated wiring, cables, and terminations located in a harsh environment.	6.a.ii The as-built Class 1E equipment and the associated wiring, cables, and terminations identified in Table 2.7.1.2-2 as being qualified for a harsh environment are bounded by type tests or a combination of type tests and analyses.

Table 2.7.1.2-5 Main Steam Supply System Inspections, Tests, Analyses, and Acceptance Criteria (Sheet 5 of 9)

Design Commitment	Inspections, Tests, Analyses	Acceptance Criteria
6.b Class 1E equipment, identified in Table 2.7.1.2-2, is powered from its respective Class 1E division.	6.b A test will be performed on each division of the as-built Class 1E equipment identified in Table 2.7.1.2-2 by providing a simulated test signal only in the Class 1E division under test.	6.b The simulated test signal exists at the as-built Class 1E equipment identified in Table 2.7.1.2-2 under test.
6.c Separation is provided between redundant divisions of MSS Class 1E cables, and between Class 1E cables and non-Class 1E cables.	6.c Inspections of the as-built Class 1E divisional cables will be performed.	6.c Physical separation or electrical isolation is provided in accordance with RG 1.75, between the as-built cables of redundant MSS Class 1E divisions and between Class 1E cables and non-Class 1E cables.
7. Deleted.	7. Deleted.	7. Deleted.
8.a Controls are provided in the MCR to open and close the remotely operated valves identified in Table 2.7.1.2-2.	8.a Tests will be performed on the as-built remotely operated valves identified in Table 2.7.1.2-2 using controls in the as-built MCR.	8.a Controls in the as-built MCR open and close the as-built remotely operated valves identified in Table 2.7.1.2-2.
8.b The remotely operated valves identified in Table 2.7.1.2-2 as having PSMS control perform an active safety function after receiving a signal from PSMS.	8.b Tests will be performed on the as-built remotely operated valves identified in Table 2.7.1.2-2 as having PSMS control using simulated signals.	8.b The as-built remotely operated valves identified in Table 2.7.1.2-2 as having PSMS control perform the active function identified in the table after receiving a simulated signal.
9.a The motor-operated valves identified in Table 2.7.1.2-2 as having an active safety function perform an active safety function to change position as indicated in the table.	9.a.i Type tests or a combination of type tests and analyses of the motor-operated valves identified in Table 2.7.1.2-2 as having an active safety function will be performed that demonstrate the capability of the valve to operate under its design conditions.	9.a.i A report exists and concludes that each motor-operated valve identified in Table 2.7.1.2-2 as having an active safety function changes position as identified in Table 2.7.1.2-2 under design conditions.

Table 2.7.1.2-5 Main Steam Supply System Inspections, Tests, Analyses, and Acceptance Criteria (Sheet 6 of 9)

Design Commitment	Inspections, Tests, Analyses	Acceptance Criteria
	9.a.ii Tests of the as-built motor-operated valves identified in Table 2.7.1.2-2 as having an active safety function will be performed under preoperational flow, differential pressure, and temperature conditions.	9.a.ii Each as-built motor-operated valve identified in Table 2.7.1.2-2 as having an active safety function changes position as identified in Table 2.7.1.2-2 under preoperational test conditions.
	9.a.iii Inspections will be performed of the as-built motor-operated valves identified in Table 2.7.1.2-2 as having an active safety function.	9.a.iii Each as-built motor-operated valve identified in Table 2.7.1.2-2 as having an active safety function is bounded by the type tests, or a combination of type tests and analyses.
9.b The air-operated valves identified in Table 2.7.1.2-2 as having an active safety function perform an active safety function to change position as indicated in the table.	9.b.i Type tests or a combination of type tests and analyses of the air-operated valves identified in Table 2.7.1.2-2 as having an active safety function will be performed that demonstrate the capability of the valve to operate under its design conditions.	9.b.i A report exists and concludes that each air-operated valve identified in Table 2.7.1.2-2 as having an active safety function changes position as identified in Table 2.7.1.2-2 under design conditions.
	9.b.ii Tests of the as-built air-operated valves identified in Table 2.7.1.2-2 as having an active safety function will be performed under preoperational flow, differential pressure, and temperature conditions.	9.b.ii Each as-built air-operated valve identified in Table 2.7.1.2-2 as having an active safety function changes position as identified in Table 2.7.1.2-2 under preoperational test conditions.
	9.b.iii Inspections will be performed of the as-built air-operated valves identified in Table 2.7.1.2-2 as having an active safety function.	9.b.iii Each as-built air-operated valve identified in Table 2.7.1.2-2 as having an active safety function is bounded by the type tests, or a combination of type tests and analyses.

Table 2.7.1.2-5 Main Steam Supply System Inspections, Tests, Analyses, and Acceptance Criteria (Sheet 7 of 9)

Design Commitment	Inspections, Tests, Analyses	Acceptance Criteria
9.c The check valves, identified in Table 2.7.1.2-2 as having an active safety function perform an active safety function to change position as indicated in the table.	9.c Tests of the as-built check valves identified in Table 2.7.1.2-2 as having an active safety function will be performed under preoperational test pressure, temperature, and fluid flow conditions.	9.c Each as-built check valve identified in Table 2.7.1.2-2 as having an active safety function changes position as identified in Table 2.7.1.2-2 under preoperational test conditions.
9.d After loss of motive power, the remotely operated valves, identified in Table 2.7.1.2-2, assume the indicated loss of motive power position.	9.d Tests of the as-built remotely operated valves identified in Table 2.7.1.2-2 will be performed under the conditions of loss of motive power.	9.d Upon loss of motive power, each as-built remotely operated valve identified in Table 2.7.1.2-2 assumes the indicated loss of motive power position.
9.e The MSIVs identified in Table 2.7.1.2-2 perform an active safety function to change position as indicated in the table.	9.e.i Type tests or a combination of type tests and analyses of the MSIVs identified in Table 2.7.1.2-2 will be performed that demonstrate the capability of the valve to operate under its design conditions.	9.e.i A report exists and concludes that each MSIV identified in Table 2.7.1.2-2 changes position as identified in Table 2.7.1.2-2 under design conditions.
	9.e.ii Tests of the as-built MSIVs identified in Table 2.7.1.2-2 will be performed under preoperational flow, differential pressure, and temperature conditions.	9.e.ii Each as-built MSIV identified in Table 2.7.1.2-2 changes position as identified in Table 2.7.1.2-2 under preoperational test conditions.
	9.e.iii Inspections will be performed of the as-built MSIVs identified in Table 2.7.1.2-2.	9.e.iii Each as-built MSIV identified in Table 2.7.1.2-2 is bounded by the type tests, or a combination of type tests and analyses.
10. Alarms and displays identified in Table 2.7.1.2-4 are provided in the MCR.	10. Inspection will be performed for retrievability of the alarms and displays identified in Table 2.7.1.2-4 in the as-built MCR.	10. Alarms and displays identified in Table 2.7.1.2-4 can be retrieved in the as-built MCR.

Table 2.7.1.2-5 Main Steam Supply System Inspections, Tests, Analyses, and Acceptance Criteria (Sheet 8 of 9)

Design Commitment	Inspections, Tests, Analyses	Acceptance Criteria
11. Alarms, displays, and controls identified in Table 2.7.1.2-4 are provided in the RSC.	11.i Inspection will be performed for retrievability of the alarms and displays identified in Table 2.7.1.2-4 in the as-built RSC.	11.i Alarms and displays identified in Table 2.7.1.2-4 can be retrieved in the as-built RSC.
	11.ii Tests of the as-built RSC control functions identified in Table 2.7.1.2-4 will be performed.	11.ii Controls in the as-built RSC operate each as-built component identified in Table 2.7.1.2-4 with an RSC control function.
12. The piping identified in Table 2.7.1.2-3 as designed for leak before break (LBB) meets the LBB criteria, or an evaluation is performed of the protection from the dynamic effects of a rupture of the line.	12. Inspections of the as-built piping identified in Table 2.7.1.2-3 will be performed based on the evaluation report for LBB or for the evaluation of protection from dynamic effects of a pipe break, as specified in Section 2.3.	12. An LBB evaluation report exists and concludes that the LBB acceptance criteria are met by the as-built piping identified in Table 2.7.1.2-3 and piping materials, or a pipe break hazards analysis report exists and concludes that protection from the dynamic effects of a line break is provided.
13.a The MSSVs identified in Table 2.7.1.2-2 provide overpressure protection for the secondary side of the steam generators and for pressure boundary components in the MSS.	13.a.i Inspections of the MSSVs identified in Table 2.7.1.2-2 will be performed to confirm that the value of the ASME Code nameplate rating is greater than or equal to system relief requirements.	13.a.i The minimum capacity for each MSSV identified in Table 2.7.1.2-2 is greater than or equal to 884,000 lb/hr at design pressure.
	13.a.ii Tests and analyses in accordance with ASME Code Section III of the MSSVs identified in Table 2.7.1.2-2 will be performed to confirm set pressure.	13.a.ii A report exists and concludes the following as-built MSSVs, identified in Table 2.7.1.2-2, set pressure: First stage: 1185 psig ± 1% Second stage: 1215 psig ± 1% Third stage: 1244 psig ± 1%
13.b During design basis events,	13.b.i Deleted.	13.b.i Deleted.

Table 2.7.1.2-5 Main Steam Supply System Inspections, Tests, Analyses, and Acceptance Criteria (Sheet 9 of 9)

Design Commitment	Inspections, Tests, Analyses	Acceptance Criteria
the MSS limits SG blowdown.	13.b.ii Inspections will be performed on the area of the as-built flow restrictor within the SG main steam outlet nozzles.	13.b.ii The as-built flow restrictor within each SG main steam line outlet nozzle does not exceed 1.4 sq. ft.
14. The MSIVs and MSBIVs identified in Table 2.7.1.2-2 close within the required response time.	14. Tests will be performed using a simulated test signal to demonstrate that as-built MSIVs and MSBIVs identified in Table 2.7.1.2-2 close within the required response time.	14. The as-built MSIVs and MSBIVs identified in Table 2.7.1.2-2 close within the following times: MSIVs close within 5 seconds. MSBIVs close within 5 seconds.

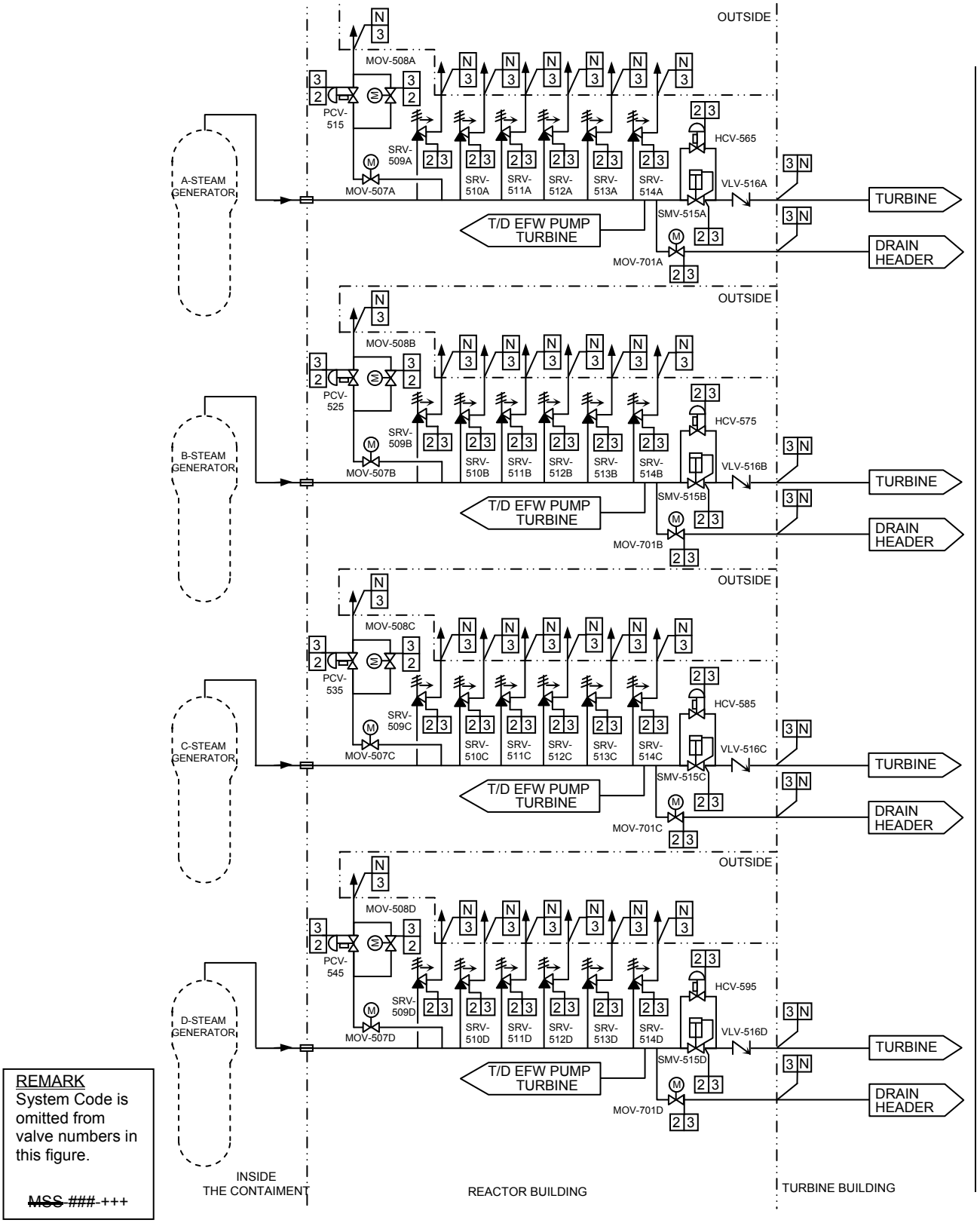

REMARK
System Code is omitted from valve numbers in this figure.

~~MSS~~ ###-+++

Figure 2.7.1.2-1 Main Steam Supply System

2.7.1.3 Main Condenser

This component does not require ITAAC.

2.7.1.4 Main Condenser Evacuation System (MCES)

This system does not require ITAAC.

2.7.1.5 Gland Seal System (GSS)

This system does not require ITAAC.

2.7.1.6 Turbine Bypass System (TBS)

This system does not require ITAAC.

2.7.1.7 Circulating Water System (CWS)

This system does not require ITAAC.

2.7.1.8 Condensate Polishing System (CPS)

This system does not require ITAAC.

2.7.1.9 Condensate and Feedwater System (CFS)

2.7.1.9.1 Design Description

The safety-related function of the CFS is to provide containment and feedwater isolation following design basis accidents and after receipt of an isolation signal. The containment isolation function is described in Section 2.11.2. The CFS provides feedwater to the SGs during startup, during shutdown from power, at power levels up to the rated power, and during plant transients.

CFS equipment and piping are located in the containment, the reactor building and the turbine building. Figure 2.7.1.9-1 illustrates the main feedwater lines, showing the arrangement of the safety-related CFS components. Table 2.7.1.9-1 also provides a tabulation of the location of CFS equipment. The CFS includes both the condensate system (CDS) and the feedwater system (FWS).

1.a The functional arrangement of the CFS is as described in the Design Description of Subsection 2.7.1.9.1 and in Table 2.7.1.9-1 and as shown in Figure 2.7.1.9-1.

1.b Except for piping, the Division A & B pair of the CFS is physically separated from the Division C&D pair of the CFS with the exception of outside of the reactor building and inside the containment so as not to preclude accomplishment of the safety function.

2.a.i The ASME Code Section III components of the CFS, identified in Table 2.7.1.9-2, are fabricated, installed and inspected in accordance with ASME Code Section III requirements.

2.a.ii The ASME Code Section III components of the CFS identified in Table 2.7.1.9-2 are reconciled with the design requirements.

2.b.i The ASME Code Section III piping of the CFS, including supports, identified in Table 2.7.1.9-3 is fabricated, installed, and inspected in accordance with ASME Code Section III requirements.

2.b.ii The ASME Code Section III piping of the CFS, including supports, identified in Table 2.7.1.9-3 is reconciled with the design requirements.

3.a Pressure boundary welds in ASME Code Section III components, identified in Table 2.7.1.9-2, meet ASME Code Section III requirements for non-destructive examination of welds.

3.b Pressure boundary welds in ASME Code Section III piping, identified in Table 2.7.1.9-3, meet ASME Code Section III requirements for non-destructive examination of welds.

4.a The ASME Code Section III components, identified in Table 2.7.1.9-2, retain their pressure boundary integrity at their design pressure.

4.b The ASME Code Section III piping, identified in Table 2.7.1.9-3, retains its pressure boundary integrity at its design pressure.

5.a The seismic Category I equipment identified in Table 2.7.1.9-2 can withstand seismic design basis loads without loss of safety function.

5.b The seismic Category I piping, including supports, identified in Table 2.7.1.9-3 can withstand seismic design basis loads without a loss of its safety function.

6.a The Class 1E equipment identified in Table 2.7.1.9-2 as being qualified for a harsh environment can withstand the environmental conditions that would exist before, during, and following a design basis accident without loss of safety function for the time required to perform the safety function.

6.b Class 1E equipment, identified in Table 2.7.1.9-2, is powered from its respective Class 1E division.

6.c Separation is provided between redundant divisions of CFS Class 1E cables and between Class 1E cables and non-Class 1E cables.

7. Deleted

8.a Controls are provided in the MCR to open and close the remotely operated valves identified in Table 2.7.1.9-2.

8.b The remotely operated valves identified in Table 2.7.1.9-2 as having PSMS control perform an active safety function after receiving a signal from PSMS.

8.c Main feedwater isolation valves (MFIVs), main feedwater regulation valves (MFRVs), main feedwater bypass regulation valves (MFBRVs), and steam generator water filling control valves (SGWFCVs), identified in Table 2.7.1.9-2, isolate feedwater to limit the mass and energy release to containment.

9.a The valves, identified in Table 2.7.1.9-2 as having an active safety function perform an active safety function to change position as indicated in the table.

9.b After loss of motive power, the remotely operated valves, identified in Table 2.7.1.9-2, assume the indicated loss of motive power position.

10. Alarms and displays identified in Table 2.7.1.9-4 are provided in the MCR.

11. Alarms, displays and controls identified in Table 2.7.1.9-4 are provided in the RSC.

2.7.1.9.2 Inspections, Tests, Analyses, and Acceptance Criteria

Table 2.7.1.9-5 describes the ITAAC for the CFS.

The ITAAC associated with the CFS equipment, components and piping that comprise a portion of the CIS are described in Table 2.11.2-2.

Table 2.7.1.9-1 Condensate and Feedwater System Location of Equipment and Piping

System and Components	Location
Main Feedwater Isolation Valves	Reactor Building
Main Feedwater Regulation Valves	Reactor Building
Main Feedwater Bypass Regulation Valves	Reactor Building
Steam Generator Water Filling Control Valves	Reactor Building
Main Feedwater Check Valves	Reactor Building
The portion of the FWS piping from the SGs inlets outward through the containment up to and including the MFIVs.	Containment and Reactor Building
The piping upstream of MFIVs to the first piping restraint at the interface between the reactor building and turbine building.	Reactor Building

Table 2.7.1.9-2 Condensate and Feedwater System Equipment Characteristics (Sheet 1 of 2)

Equipment Name	Tag No.	ASME Code Section III Class	Seismic Category I	Remotely Operated Valve	Class 1E/ Qual. For Harsh Envir.	PSMS Control	Active Safety Function	Loss of Motive Power Position
Main Feedwater Isolation Valves	FWS-SMV-512 A,B,C,D	2	Yes	Yes	Yes/Yes	Main Feedwater Isolation Remote Manual	Transfer Closed	Closed
Main Feedwater Regulation Valves	FWS-FCV-510, 520, 530, 540	3	Yes	Yes	Yes/Yes	Main Feedwater Isolation Remote Manual	Transfer Closed	Closed
Main Feedwater Bypass Regulation Valves	FWS-FCV-511, 521, 531, 541	3	Yes	Yes	Yes/Yes	Main Feedwater Isolation Remote Manual	Transfer Closed	Closed
Steam Generator Water Filling Control Valves	FWS-LCV-610, 620, 630, 640	3	Yes	Yes	Yes/Yes	Main Feedwater Isolation Remote Manual	Transfer Closed	Closed
Main Feedwater Check Valves	FWS-VLV-511 A,B,C,D	3	Yes	No	-	-	Transfer Closed	-

Table 2.7.1.9-2 Condensate and Feedwater System Equipment Characteristics (Sheet 2 of 2)

Equipment Name	Tag No.	ASME Code Section III Class	Seismic Category I	Remotely Operated Valve	Class 1E/ Qual. For Harsh Envir.	PSMS Control	Active Safety Function	Loss of Motive Power Position
Steam Generator Water Level (Narrow Range)	FWS-LT-510, 511, 512, 513, 520, 521, 522, 523, 530, 531, 532, 533, 540, 541, 542, 543,	-	Yes	-	Yes/ Yes	-	-	-
Steam Generator Water Level (Wide Range)	FWS-LT-514, 524, 534, 544	-	Yes	-	Yes/ Yes	-	-	-

Note: Dash (-) indicates not applicable

Table 2.7.1.9-3 Condensate and Feedwater System Piping Characteristics

Pipe Line Name	ASME Code Section III Class	Leak Before Break	Seismic Category I
The portion of the FWS piping from the SGs inlets outward through the containment up to and including the MFIVs.	2	No	Yes
The piping upstream of MFIVs to the first piping restraint at the interface between the reactor building and turbine building.	3	No	Yes

Table 2.7.1.9-4 Condensate and Feedwater System Equipment Alarms, Displays, and Control Functions

Equipment/Instrument Name	MCR/RSC Alarm	MCR Display	MCR/RSC Control Function	RSC Display
Main Feedwater Isolation Valves (FWS-SMV-512A, B, C, D)	No	Yes	Yes	Yes
Main Feedwater Regulation Valves (FWS-FCV-510, 520, 530, 540)	No	Yes	Yes	Yes
Main Feedwater Bypass Regulation Valves (FWS-FCV-511, 521, 531, 541)	No	Yes	Yes	Yes
Steam Generator Water Filling Control Valves (FWS-LCV-610, 620, 630, 640)	No	Yes	Yes	Yes
Steam Generator Water Level (Wide Range) (FWS-LT-514, 524, 534, 544)	Yes	Yes	No	Yes
Steam Generator Water Level (Narrow Range) (FWS-LT-510, 511, 512, 513, 520, 521, 522, 523, 530, 531, 532, 533, 540, 541, 542, 543)	Yes	Yes	No	Yes

Table 2.7.1.9-5 Condensate and Feedwater System Inspections, Tests, Analyses, and Acceptance Criteria (Sheet 1 of 7)

Design Commitment	Inspections, Tests, Analyses	Acceptance Criteria
1.a The functional arrangement of the CFS is as described in the Design Description of Subsection 2.7.1.9.1 and in Table 2.7.1.9-1 and as shown in Figure 2.7.1.9-1.	1.a Inspection of the as-built CFS will be performed.	1.a The as-built CFS conforms to the functional arrangement as described in the Design Description of Subsection 2.7.1.9.1 and in Table 2.7.1.9-1 and as shown in Figure 2.7.1.9-1.
1.b Except for piping, the Division A&B pair of the CFS is physically separated from the Division C&D pair of the CFS with the exception of outside of the reactor building and inside the containment so as not to preclude accomplishment of the safety function.	1.b Inspections and analysis of the as-built CFS will be performed.	1.b A report exists and concludes that, except for piping, the Division A&B pair of the as-built CFS is physically separated from the Division C&D pair of the as-built CFS by spatial separation, barriers, or enclosures with the exception of outside of the reactor building and inside the containment so as to assure that the functions of the safety-related system are maintained.
2.a.i The ASME Code Section III components of the CFS, identified in Table 2.7.1.9-2, are fabricated, installed and inspected in accordance with ASME Code Section III requirements.	2.a.i Inspection of the as-built ASME Code Section III components of the CFS identified in Table 2.7.1.9-2, will be performed.	2.a.i The ASME Code Section III data report(s) (certified, when required by ASME Code) and inspection reports (including N-5 Data Reports where applicable) exist and conclude that the as-built ASME Code Section III components of the CFS identified in Table 2.7.1.9-2 are fabricated, installed, and inspected in accordance with ASME Code Section III requirements.
2.a.ii The ASME Code Section III components of the CFS identified in Table 2.7.1.9-2 are reconciled with the design requirements.	2.a.ii A reconciliation analysis of the components identified in Table 2.7.1.9-2 using as-designed and as-built information and ASME Code Section III design report(s) (NCA-3550) will be performed.	2.a.ii The ASME Code Section III design report(s) (certified, when required by ASME Code) exist and conclude that design reconciliation has been completed in accordance with the ASME Code, for the as-built ASME Code Section III components of the CFS identified in Table 2.7.1.9-2. The report documents the results of the reconciliation analysis.

Table 2.7.1.9-5 Condensate and Feedwater System Inspections, Tests, Analyses, and Acceptance Criteria (Sheet 2 of 7)

Design Commitment	Inspections, Tests, Analyses	Acceptance Criteria
2.b.i The ASME Code Section III piping of the CFS, including supports, identified in Table 2.7.1.9-3, is fabricated, installed, and inspected in accordance with ASME Code Section III requirements.	2.b.i Inspection of the as-built ASME Code Section III piping of the CFS, including supports, identified in Table 2.7.1.9-3, will be performed.	2.b.i The ASME Code Section III data report(s) (certified when required by ASME Code) and inspection reports (including N-5 Data Reports where applicable) exist and conclude that the as-built ASME Code Section III piping of the CFS, including supports, identified in Table 2.7.1.9-3 is fabricated, installed, and inspected in accordance with ASME Code Section III requirements.
2.b.ii The ASME Code Section III piping of the CFS, including supports, identified in Table 2.7.1.9-3 is reconciled with the design requirements.	2.b.ii A reconciliation analysis of the piping of the CFS, including supports, identified in Table 2.7.1.9-3, using as-designed and as-built information and ASME Code Section III design report(s) (NCA-3550) will be performed.	2.b.ii The ASME Code Section III design report(s) (certified, when required by ASME Code) exist and conclude that design reconciliation has been completed in accordance with the ASME Code, for the as-built ASME Code Section III piping of the CFS, including supports, identified in Table 2.7.1.9-3. The report documents the results of the reconciliation analysis.
3.a Pressure boundary welds in ASME Code Section III components, identified in Table 2.7.1.9-2, meet ASME Code Section III requirements for non-destructive examination of welds.	3.a Inspections of the as-built pressure boundary welds in ASME Code Section III components identified in Table 2.7.1.9-2, will be performed in accordance with the ASME Code Section III.	3.a The ASME Code Section III code reports exist and conclude that the ASME Code Section III requirements are met for non-destructive examination of the as-built pressure boundary welds in ASME Code Section III components identified in Table 2.7.1.9-2.
3.b Pressure boundary welds in ASME Code Section III piping, identified in Table 2.7.1.9-3, meet ASME Code Section III requirements for non-destructive examination of welds.	3.b Inspections of the as-built pressure boundary welds in ASME Code Section III piping identified in Table 2.7.1.9-3 will be performed in accordance with the ASME Code Section III.	3.b The ASME Code Section III code reports exist and conclude that the ASME Code Section III requirements are met for non-destructive examination of the as-built pressure boundary welds in ASME Code Section III piping identified in Table 2.7.1.9-3.

Table 2.7.1.9-5 Condensate and Feedwater System Inspections, Tests, Analyses, and Acceptance Criteria (Sheet 3 of 7)

Design Commitment	Inspections, Tests, Analyses	Acceptance Criteria
4.a The ASME Code Section III components, identified in Table 2.7.1.9-2, retain their pressure boundary integrity at their design pressure.	4.a A hydrostatic test will be performed on the as-built components, identified in Table 2.7.1.9-2, required by the ASME Code Section III to be hydrostatically tested.	4.a ASME Code Data Report(s) exist and conclude that the results of the hydrostatic test of the as-built components identified in Table 2.7.1.9-2 as ASME Code Section III conform to the requirements of the ASME Code Section III.
4.b The ASME Code Section III piping, identified in Table 2.7.1.9-3, retains its pressure boundary integrity at its design pressure.	4.b A hydrostatic test will be performed on the as-built piping, identified in Table 2.7.1.9-3, required by the ASME Code Section III to be hydrostatically tested.	4.b ASME Code Data Report(s) exist and conclude that the results of the hydrostatic test of the as-built piping identified in Table 2.7.1.9-3 as ASME Code Section III conform to the requirements of the ASME Code Section III.
5.a The seismic Category I equipment identified in Table 2.7.1.9-2 can withstand seismic design basis loads without loss of safety function.	5.a.i Inspections will be performed to verify that the as-built seismic Category I equipment identified in Table 2.7.1.9-2 is located in a seismic Category I structure.	5.a.i The as-built seismic Category I equipment identified in Table 2.7.1.9-2 is located in a seismic Category I structure.
	5.a.ii Type tests, analyses, or a combination of type tests and analyses of seismic Category I equipment identified in Table 2.7.1.9-2 will be performed using analytical assumptions, or will be performed under conditions, which bound the seismic design basis requirements.	5.a.ii A report exists and concludes that the seismic Category I equipment identified in Table 2.7.1.9-2 can withstand seismic design basis loads without loss of safety function.
	5.a.iii Inspections and analyses will be performed to verify that the as-built seismic Category I equipment identified in Table 2.7.1.9-2, including anchorages, is seismically bounded by the tested or analyzed conditions.	5.a.iii A report exists and concludes that the as-built seismic Category I equipment identified in Table 2.7.1.9-2, including anchorages, is seismically bounded by the tested or analyzed conditions.

Table 2.7.1.9-5 Condensate and Feedwater System Inspections, Tests, Analyses, and Acceptance Criteria (Sheet 4 of 7)

Design Commitment	Inspections, Tests, Analyses	Acceptance Criteria
5.b The seismic Category I piping, including supports, identified in Table 2.7.1.9-3 can withstand seismic design basis loads without a loss of its safety function.	5.b.i Inspections will be performed to verify that the as-built seismic Category I piping, including supports, identified in Table 2.7.1.9-3 is supported by a seismic Category I structure(s).	5.b.i The as-built seismic Category I piping, including supports, identified in Table 2.7.1.9-3 is supported by a seismic Category I structure(s).
	5.b.ii Inspections and analyses will be performed to verify that the as-built seismic Category I piping, including supports, identified in Table 2.7.1.9-3 can withstand seismic design basis loads without a loss of its safety function.	5.b.ii A report exists and concludes that the as-built seismic Category I piping, including supports, identified in Table 2.7.1.9-3 can withstand seismic design basis loads without a loss of its safety function.
6.a The Class 1E equipment identified in Table 2.7.1.9-2 as being qualified for a harsh environment can withstand the environmental conditions that would exist before, during, and following a design basis accident without loss of safety function for the time required to perform the safety function.	6.a.i Type tests or a combination of type tests and analyses using the design environmental conditions, or under the conditions which bound the design environmental conditions, will be performed on Class 1E equipment identified in Table 2.7.1.9-2 as being qualified for a harsh environment.	6.a.i A report exists and concludes that the Class 1E equipment identified in Table 2.7.1.9-2 as being qualified for a harsh environment can withstand the environmental conditions that would exist before, during, and following a design basis accident without loss of safety function for the time required to perform the safety function.
	6.a.ii Inspection will be performed of the as-built Class 1E equipment identified in Table 2.7.1.9-2 as being qualified for a harsh environment and the associated wiring, cables, and terminations located in a harsh environment.	6.a.ii The as-built Class 1E equipment and the associated wiring, cables, and terminations identified in Table 2.7.1.9-2 as being qualified for a harsh environment are bounded by type tests or a combination of type tests and analyses.
6.b Class 1E equipment, identified in Table 2.7.1.9-2, is powered from its respective Class 1E division.	6.b A test will be performed on each division of the as-built Class 1E equipment identified in Table 2.7.1.9-2 by providing a simulated test signal only in the Class 1E division under test.	6.b The simulated test signal exists at the as-built Class 1E equipment identified in Table 2.7.1.9-2 under test.

Table 2.7.1.9-5 Condensate and Feedwater System Inspections, Tests, Analyses, and Acceptance Criteria (Sheet 5 of 7)

Design Commitment	Inspections, Tests, Analyses	Acceptance Criteria
6.c Separation is provided between redundant divisions of CFS Class 1E cables, and between Class 1E cables and non-Class 1E cables.	6.c Inspections of the as-built Class 1E divisional cables will be performed.	6.c Physical separation or electrical isolation is provided in accordance with RG 1.75, between the as-built cables of redundant CFS Class 1E divisions and between Class 1E cables and non-Class 1E cables.
7. Deleted.	7. Deleted.	7. Deleted.
8.a Controls are provided in the MCR to open and close the remotely operated valves identified in Table 2.7.1.9-2.	8.a Tests will be performed on the as-built remotely operated valves identified in Table 2.7.1.9-2 using controls in the as-built MCR.	8.a Controls in the as-built MCR open and close the as-built remotely operated valves identified in Table 2.7.1.9-2.
8.b The remotely operated valves identified in Table 2.7.1.9-2 as having PSMS control perform an active safety function after receiving a signal from PSMS.	8.b.Tests will be performed on the as-built remotely operated valves identified in Table 2.7.1.9-2 as having PSMS control using simulated signals.	8.b. The as-built remotely operated valves identified in Table 2.7.1.9-2 as having PSMS control perform the active function identified in the table after receiving a simulated signal.
8.c Main feedwater isolation valves (MFIVs), main feedwater regulation valves (MFRVs), main feedwater bypass regulation valves(MFBRVs), and steam generator water filling control valves (SGWFCVs), identified in Table 2.7.1.9-2, isolate feedwater to limit the mass and energy release to containment.	8.c Tests will be performed to verify as-built MFIVs, MFRVs, MFBRVs and SGWFCVs identified in Table 2.7.1.9-2 close within the required response time using simulated signals.	8.c The as-built MFIVs, MFRVs, MFBRVs and SGWFCVs identified in Table 2.7.1.9-2 close within 5 seconds after receiving a simulated signal.
9.a The valves, identified in Table 2.7.1.9-2 as having an active safety function perform an active safety function to change position as indicated in the table.	9.a.i Type tests or a combination of type tests and analyses of the air-operated valves and MFIVs identified in Table 2.7.1.9-2 as having an active safety function will be performed that demonstrate the capability of the valve to operate under its design conditions.	9.a.i A report exists and concludes that each air-operated valve and each MFIV identified in Table 2.7.1.9-2 as having an active safety function changes position as identified in Table 2.7.1.9-2 under design condition.

Table 2.7.1.9-5 Condensate and Feedwater System Inspections, Tests, Analyses, and Acceptance Criteria (Sheet 6 of 7)

Design Commitment	Inspections, Tests, Analyses	Acceptance Criteria
	9.a.ii Tests of the as-built air-operated valves and MFIVs identified in Table 2.7.1.9-2 as having an active safety function will be performed under preoperational flow, differential pressure, and temperature conditions.	9.a.ii Each as-built air-operated valve and each as-built MFIV identified in Table 2.7.1.9-2 as having an active safety function changes position as identified in Table 2.7.1.9-2 under preoperational test conditions.
	9.a.iii Tests of the as-built check valves identified in Table 2.7.1.9-2 as having an active safety function will be performed under preoperational test pressure, temperature, and fluid flow conditions.	9.a.iii Each as-built check valve identified in Table 2.7.1.9-2 as having an active safety function changes position as indicated in Table 2.7.1.9-2 under preoperational test conditions.
	9.a.iv Inspections will be performed of the as-built air-operated valves and MFIVs identified in Table 2.7.1.9-2 as having an active safety function.	9.a.iv Each as-built air-operated valve and each as-built MFIV identified in Table 2.7.1.9-2 as having an active safety function is bounded by the type tests, or a combination of type tests and analyses.
9.b After loss of motive power, the remotely operated valves, identified in Table 2.7.1.9-2, assume the indicated loss of motive power position.	9.b Tests of the as-built remotely operated valves identified in Table 2.7.1.9-2 will be performed under the conditions of loss of motive power.	9.b Upon loss of motive power, each as-built remotely operated valve identified in Table 2.7.1.9-2 assumes the indicated loss of motive power position.
10. Alarms and displays identified in Table 2.7.1.9-4 are provided in the MCR.	10. Inspection will be performed for retrievability of the alarms and displays identified in Table 2.7.1.9-4 in the as-built MCR.	10. Alarms and displays identified in Table 2.7.1.9-4 can be retrieved in the as-built MCR.
11. Alarms, displays and controls identified in Table 2.7.1.9-4 are provided in the RSC.	11.i Inspection will be performed for retrievability of the alarms and displays identified in Table 2.7.1.9-4 in the as-built RSC.	11.i Alarms and displays identified in Table 2.7.1.9-4 can be retrieved in the as-built RSC.

Table 2.7.1.9-5 Condensate and Feedwater System Inspections, Tests, Analyses, and Acceptance Criteria (Sheet 7 of 7)

Design Commitment	Inspections, Tests, Analyses	Acceptance Criteria
	11.ii Tests of the as-built RSC control functions identified in Table 2.7.1.9-4 will be performed.	11.ii Controls in the as-built RSC operate the as-built equipment identified in Table 2.7.1.9-4 with an RSC control function.

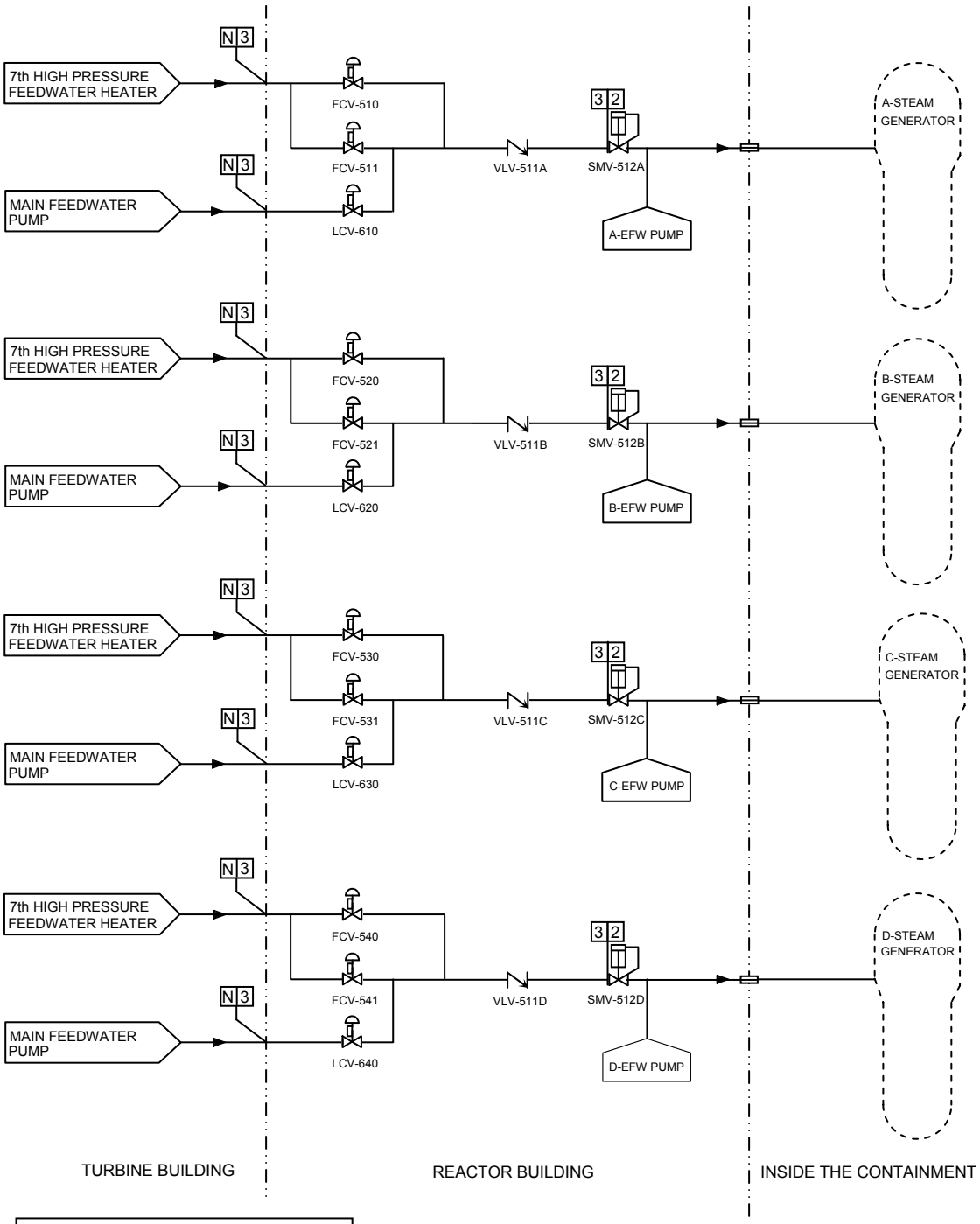

REMARK
System Code is omitted from valve numbers in this figure.
~~FWS~~ ~~###~~-+++

Figure 2.7.1.9-1 Feedwater System

2.7.1.10 Steam Generator Blowdown System (SGBDS)

2.7.1.10.1 Design Description

The SGBDS includes a safety-related function of isolating the secondary side of the SG using two isolation valves in series in the blowdown line from each SG. This maintains the SG as a heat sink for achieving safe shutdown or mitigating the consequences of a design basis accident.

The SGBDS also performs a containment isolation function, as described in Section 2.11.2, for the SGBDS lines penetrating the containment.

The safety related portions of the SGBDS equipment and piping are located in the containment and the reactor building(R/B). Seismic Category I piping identified in Table 2.7.1.10-2 is also located in the containment and the R/B.

1. The functional arrangement of the steam generator blowdown system is as described in the Design Description of Subsection 2.7.1.10.1 and as shown in Figure 2.7.1.10-1.

2.a.i The ASME Code Section III components of the SGBDS, identified in Table 2.7.1.10-1, are fabricated, installed, and inspected in accordance with ASME Code Section III requirements.

2.a.ii The ASME Code Section III components of the SGBDS identified in Table 2.7.1.10-1 are reconciled with the design requirements.

2.b.i The ASME Code Section III piping of the SGBDS, including supports, identified in Table 2.7.1.10-2, is fabricated, installed, and inspected in accordance with ASME Code Section III requirements.

2.b.ii The ASME Code Section III piping of the SGBDS, including supports, identified in Table 2.7.1.10-2, is reconciled with the design requirements.

3.a Pressure boundary welds in ASME Code Section III components, identified in Table 2.7.1.10-1, meet ASME Code Section III requirements for non-destructive examination of welds.

3.b Pressure boundary welds in ASME Code Section III piping, identified in Table 2.7.1.10-2, meet ASME Code Section III requirements for non-destructive examination of welds.

4.a. The ASME Code Section III components, identified in Table 2.7.1.10-1, retain their pressure boundary integrity at their design pressure.

4.b The ASME Code Section III piping, identified in Table 2.7.1.10-2, retains its pressure boundary integrity at its design pressure.

5.a The seismic Category I equipment identified in Table 2.7.1.10-1 can withstand seismic design basis loads without loss of safety function.

5.b The seismic Category I piping, including supports, identified in Table 2.7.1.10-2 can withstand seismic design basis loads without a loss of its safety function.

6. Class 1E equipment, identified in Table 2.7.1.10-1, is powered from its respective Class 1E division.

7. Separation is provided between redundant divisions of SGBDS Class 1E cables and between Class 1E cables and non-Class 1E cables.

8. After loss of motive power, the remotely operated valves, identified in Table 2.7.1.10-1, assume the indicated loss of motive power position.

9. Each mechanical division of the SGBDS (Divisions A, B, C & D) is physically separated from the other divisions with the exception of inside the containment so as not to preclude accomplishment of the safety function.

10. Displays identified in Table 2.7.1.10-3 are provided in the MCR.

11. Displays and controls identified in Table 2.7.1.10-3 are provided in the RSC.

12. The Class 1E equipment identified in Table 2.7.1.10-1 as being qualified for a harsh environment can withstand the environmental conditions that would exist before, during, and following a design basis accident without loss of safety function for the time required to perform the safety function.

13.a Controls are provided in the MCR to open and close the remotely operated valves identified in Table 2.7.1.10-3.

13.b The remotely operated valves identified in Table 2.7.1.10-1 as having PSMS control perform an active safety function after receiving a signal from PSMS.

14. The air-operated valves, identified in Table 2.7.1.10-1, as having an active safety function perform an active safety function to change position as indicated in the table.

2.7.1.10.2 Inspections, Tests, Analyses, and Acceptance Criteria

Table 2.7.1.10-4 describes the ITAAC for the SGBDS.

Additional ITAAC associated with the SGBDS equipment, components, and piping that comprise a portion of the CIS are described in Table 2.11.2-2.

Table 2.7.1.10-1 Steam Generator Blowdown System Equipment Characteristics

System Name	Tag No.	ASME Code Section III Class	Seismic Category I	Remotely Operated Valve	Class 1E/ Qual. For Harsh Envir.	PSMS Control	Active Safety Function	Loss of Motive Power Position
SG blowdown isolation valves	SGS-AOV-001 A,B,C,D	2	Yes	Yes	Yes/Yes	Containment Isolation Phase A and Emergency Feedwater Actuation	Transfer Closed	Closed
SG blowdown isolation valves	SGS-AOV-002 A,B,C,D	3	Yes	Yes	Yes/Yes	Emergency Feedwater Actuation	Transfer Closed	Closed
SG Blowdown sampling line isolation valves	SGS-AOV-031 A,B,C,D	2	Yes	Yes	Yes/Yes	Containment Isolation Phase A and Emergency Feedwater Actuation	Transfer Closed	Closed

Table 2.7.1.10-2 Steam Generator Blowdown System Piping Characteristics

Pipe Line Name	ASME Code Section III Class	Seismic Category I
The piping and valves up to and including the first containment isolation valve outside the containment.	2	Yes
The SGBDS piping and valves from the outlet of the first containment isolation valve up to and including pipe anchors located in the main steam piping room wall.	3	Yes

Table 2.7.1.10-3 Steam Generator Blowdown System Equipment Alarms, Displays and Control Functions

Equipment Name	MCR/RSC Alarm	MCR Display	MCR/RSC Control Function	RSC Display
SG blowdown Isolation valves (SGS-AOV-001 A,B,C,D)	No	Yes	Yes	Yes
SG blowdown Isolation valves (SGS-AOV-002 A,B,C,D)	No	Yes	Yes	Yes
SG Blowdown sampling line Isolation valves (SGS-AOV-031 A,B,C,D)	No	Yes	Yes	Yes

Table 2.7.1.10-4 Steam Generator Blowdown System Inspections, Tests, Analyses, and Acceptance Criteria (Sheet 1 of 6)

Design Commitment	Inspections, Tests, Analyses	Acceptance Criteria
1. The functional arrangement of the steam generator blowdown system is as described in the Design Description of Subsection 2.7.1.10.1 and as shown in Figure 2.7.1.10-1.	1. Inspection of the as-built steam generator blowdown system will be performed.	1. The as-built steam generator blowdown system conforms to the functional arrangement as described in the Design Description of Subsection 2.7.1.10.1, and as shown in Figure 2.7.1.10-1.
2.a.i The ASME Code Section III components of the SGBDS, identified in Table 2.7.1.10-1, are fabricated, installed, and inspected in accordance with ASME Code Section III requirements.	2.a.i Inspection of the as-built ASME Code Section III components of the SGBDS, identified in Table 2.7.1.10-1, will be performed.	2.a.i The ASME Code Section III data report(s) (certified, when required by ASME Code) and inspection reports (including N-5 Data Reports where applicable) exist and conclude that the as-built ASME Code Section III components of the SGBDS identified in Table 2.7.1.10-1 are fabricated, installed, and inspected in accordance with ASME Code Section III requirements.
2.a.ii The ASME Code Section III components of the SGBDS identified in Table 2.7.1.10-1 are reconciled with the design requirements.	2.a.ii A reconciliation analysis of the components identified in Table 2.7.1.10-1 using as-designed and as-built information and ASME Code Section III design report(s) (NCA-3550) will be performed.	2.a.ii The ASME Code Section III design report(s) (certified, when required by ASME Code) exist and conclude that design reconciliation has been completed in accordance with the ASME Code, for the as-built ASME Code Section III components of the SGBDS identified in Table 2.7.1.10-1. The report documents the results of the reconciliation analysis.

Table 2.7.1.10-4 Steam Generator Blowdown System Inspections, Tests, Analyses, and Acceptance Criteria (Sheet 2 of 6)

Design Commitment	Inspections, Tests, Analyses	Acceptance Criteria
2.b.i The ASME Code Section III piping of the SGBDS, including supports, identified in Table 2.7.1.10-2, is fabricated, installed, and inspected in accordance with ASME Code Section III requirements.	2.b.i Inspection of the as-built ASME Code Section III piping of the SGBDS, including supports, identified in Table 2.7.1.10-2, will be performed.	2.b.i The ASME Code Section III data report(s) (certified, when required by ASME Code) and inspection reports (including N-5 Data Reports where applicable) exist and conclude that the as-built ASME Code Section III piping of the SGBDS, including supports, identified in Table 2.7.1.10-2 is fabricated, installed, and inspected in accordance with ASME Code Section III requirements.
2.b.ii The ASME Code Section III piping of the SGBDS, including supports, identified in Table 2.7.1.10-2 is reconciled with the design requirements.	2.b.ii A reconciliation analysis of the piping of the SGBDS, including supports, identified in Table 2.7.1.10-2, using as-designed and as-built information and ASME Code Section III design report(s) (NCA-3550) will be performed.	2.b.ii The ASME Code Section III design report(s) (certified, when required by ASME Code) exist and conclude that design reconciliation has been completed in accordance with the ASME Code, for the as-built ASME Code Section III piping of the SGBDS, including supports, identified in Table 2.7.1.10-2. The report documents the results of the reconciliation analysis.
3.a Pressure boundary welds in ASME Code Section III components, identified in Table 2.7.1.10-1, meet ASME Code Section III requirements for non-destructive examination of welds.	3.a Inspections of the as-built pressure boundary welds in ASME Code Section III components identified in Table 2.7.1.10-1, will be performed in accordance with the ASME Code Section III.	3.a The ASME Code Section III code reports exist and conclude that the ASME Code Section III requirements are met for non-destructive examination of the as-built pressure boundary welds in ASME Code Section III components identified in Table 2.7.1.10-1.

Table 2.7.1.10-4 Steam Generator Blowdown System Inspections, Tests, Analyses, and Acceptance Criteria (Sheet 3 of 6)

Design Commitment	Inspections, Tests, Analyses	Acceptance Criteria
3.b Pressure boundary welds in ASME Code Section III piping, identified in Table 2.7.1.10-2, meet ASME Code Section III requirements for non-destructive examination of welds.	3.b Inspections of the as-built pressure boundary welds in ASME Code Section III piping identified in Table 2.7.1.10-2 will be performed in accordance with the ASME Code Section III.	3.b The ASME Code Section III code reports exist and conclude that the ASME Code Section III requirements are met for non-destructive examination of the as-built pressure boundary welds in ASME Code Section III piping identified in Table 2.7.1.10-2.
4.a The ASME Code Section III components, identified in Table 2.7.1.10-1, retain their pressure boundary integrity at their design pressure.	4.a A hydrostatic test will be performed on the as-built components, identified in Table 2.7.1.10-1, required by the ASME Code Section III to be hydrostatically tested.	4.a ASME Code Data Report(s) exist and conclude that the results of the hydrostatic test of the as-built components identified in Table 2.7.1.10-1 as ASME Code Section III conform to the requirements of the ASME Code Section III.
4.b The ASME Code Section III piping, identified in Table 2.7.1.10-2, retains its pressure boundary integrity at its design pressure.	4.b A hydrostatic test will be performed on the as-built piping, identified in Table 2.7.1.10-2, required by the ASME Code Section III to be hydrostatically tested.	4.b ASME Code Data Report(s) exist and conclude that the results of the hydrostatic test of the as-built piping identified in Table 2.7.1.10-2 as ASME Code Section III conform to the requirements of the ASME Code Section III.
5.a The seismic Category I equipment identified in Table 2.7.1.10-1 can withstand seismic design basis loads without loss of safety function.	5.a.i Inspections will be performed to verify that the as-built seismic Category I equipment identified in Table 2.7.1.10-1 is located in a seismic Category I structure.	5.a.i The as-built seismic Category I equipment identified in Tables 2.7.1.10-1 is located in a seismic Category I structure.
	5.a.ii Type tests, analyses, or a combination of type tests and analyses of seismic Category I equipment identified in Table 2.7.1.10-1 will be performed using analytical assumptions, or will be performed under conditions, which bound the seismic design basis requirements.	5.a.ii A report exists and concludes that the seismic Category I equipment identified in Table 2.7.1.10-1 can withstand seismic design basis loads without loss of safety function.

Table 2.7.1.10-4 Steam Generator Blowdown System Inspections, Tests, Analyses, and Acceptance Criteria (Sheet 4 of 6)

Design Commitment	Inspections, Tests, Analyses	Acceptance Criteria
	5.a.iii Inspections and analyses will be performed to verify that the as-built seismic Category I equipment identified in Table 2.7.1.10-1, including anchorages, is seismically bounded by the tested or analyzed conditions.	5.a.iii A report exists and concludes that the as-built seismic Category I equipment identified in Table 2.7.1.10-1, including anchorages, is seismically bounded by the tested or analyzed conditions.
5.b The seismic Category I piping, including supports, identified in Table 2.7.1.10-2 can withstand seismic design basis loads without a loss of its safety function.	5.b.i Inspections will be performed to verify that the as-built seismic Category I piping, including supports, identified in Table 2.7.1.10-2 is supported by a seismic Category I structure(s).	5.b.i The as-built seismic Category I piping, including supports, identified in Table 2.7.1.10-2 is supported by a seismic Category I structure(s).
	5.b.ii Inspections and analyses will be performed to verify that the as-built seismic Category I piping, including supports, identified in Table 2.7.1.10-2 can withstand seismic design basis loads without a loss of its safety function.	5.b.ii A report exists and concludes that the as-built seismic Category I piping, including supports, identified in Table 2.7.1.10-2 can withstand seismic design basis loads without a loss of its safety function.
6. Class 1E equipment, identified in Table 2.7.1.10-1, is powered from its respective Class 1E division.	6. A test will be performed on each division of the as-built Class 1E equipment identified in Table 2.7.1.10-1 by providing a simulated test signal only in the Class 1E division under test.	6. The simulated test signal exists at the as-built Class 1E equipment identified in Table 2.7.1.10-1 under test.
7. Separation is provided between redundant divisions of SGBDS Class 1E cables , and between Class 1E cables and non-Class 1E cables.	7. Inspections of the as-built Class 1E divisional cables will be performed.	7. Physical separation or electrical isolation is provided in accordance with R.G. 1.75, between the as-built cables of redundant SGBDS Class 1E divisions and between Class 1E cables and non-Class 1E cables.

Table 2.7.1.10-4 Steam Generator Blowdown System Inspections, Tests, Analyses, and Acceptance Criteria (Sheet 5 of 6)

Design Commitment	Inspections, Tests, Analyses	Acceptance Criteria
8. After loss of motive power, the remotely operated valves, identified in Table 2.7.1.10-1, assume the indicated loss of motive power position.	8. Tests of the as-built remotely operated valves identified in Table 2.7.1.10-1 will be performed under the conditions of loss of motive power.	8. Upon loss of motive power, each as-built remotely operated valve identified in Table 2.7.1.10-1 assumes the indicated loss of motive power position.
9. Each mechanical division of the SGBDS (Divisions A, B, C & D) is physically separated from the other divisions with the exception of inside the containment so as not to preclude accomplishment of the safety function.	9. Inspections and analysis of the as-built SGBDS will be performed.	9. A report exists and concludes that each mechanical division of the as-built SGBDS is physically separated from other mechanical divisions of the system by spatial separation, barriers, or enclosures with the exception of inside the containment so as to assure that the functions of the safety related system are maintained.
10. Displays identified in Table 2.7.1.10-3 are provided in the MCR.	10. Inspection will be performed for retrievability of the displays identified in Table 2.7.1.10-3 in the as-built MCR.	10. Displays identified in Table 2.7.1.10-3 can be retrieved in the as-built MCR.
11. Displays and controls identified in Table 2.7.1.10-3 are provided in the RSC.	11.i Inspection will be performed for retrievability of the displays identified in Table 2.7.1.10-3 in the as-built RSC.	11.i Displays identified in Table 2.7.1.10-3 can be retrieved in the as-built RSC.
	11.ii Tests of the as-built RSC control functions identified in Table 2.7.1.10-3 will be performed.	11.ii Controls in the as-built RSC operate the as-built equipment identified in Table 2.7.1.10-3 with an RSC control function.
12. The Class 1E equipment identified in Table 2.7.1.10-1 as being qualified for a harsh environment can withstand the environmental conditions that would exist before, during, and following a design basis accident without loss of safety function for the time required to perform the safety function.	12.i Type tests or a combination of type tests and analyses using the design environmental conditions, or under the conditions which bound the design environmental conditions, will be performed on Class 1E equipment identified in Table 2.7.1.10-1 as being qualified for a harsh environment.	12.i A report exists and concludes that the Class 1E equipment identified in Table 2.7.1.10-1 as being qualified for a harsh environment can withstand the environmental conditions that would exist before, during, and following a design basis accident without loss of safety function for the time required to perform the safety function.

Table 2.7.1.10-4 Steam Generator Blowdown System Inspections, Tests, Analyses, and Acceptance Criteria (Sheet 6 of 6)

Design Commitment	Inspections, Tests, Analyses	Acceptance Criteria
	12.ii Inspection will be performed of the as-built Class 1E equipment identified in Table 2.7.1.10-1 as being qualified for a harsh environment and the associated wiring, cables, and terminations located in a harsh environment.	12.ii The as-built Class 1E equipment and the associated wiring, cables, and terminations identified in Table 2.7.1.10-1 as being qualified for a harsh environment are bounded by type tests or a combination of type tests and analyses.
13.a Controls are provided in the MCR to open and close the remotely operated valves identified in Table 2.7.1.10-3.	13.a Tests will be performed on the as-built remotely operated valves identified in Table 2.7.1.10-3 using controls in the as-built MCR.	13.a Controls in the as-built MCR open and close the as-built remotely operated valves identified in Table 2.7.1.10-3.
13.b The remotely operated valves identified in Table 2.7.1.10-1 as having PSMS control perform an active safety function after receiving a signal from PSMS.	13.b Test will be performed on the as-built remotely operated valves identified in Table 2.7.1.10-1 as having PSMS control using simulated signals.	13.b The as-built remotely operated valves identified in Table 2.7.1.10-1 as having PSMS control perform the active safety function identified in the table after receiving a simulated signal.
14. The air-operated valves, identified in Table 2.7.1.10-1, as having an active safety function perform an active safety function to change position as indicated in the table.	14.i Type tests or a combination of type tests and analyses of the air-operated valves identified in Table 2.7.1.10-1 as having an active safety function will be performed that demonstrate the capability of the valve to operate under its design conditions.	14.i A report exists and concludes that each air-operated valve identified in Table 2.7.1.10-1 as having an active safety function changes position as identified in Table 2.7.1.10-1 under design conditions.
	14.ii Tests of the as-built air-operated valves identified in Table 2.7.1.10-1 as having an active safety function will be performed under preoperational flow, differential pressure, and temperature conditions.	14.ii Each as-built air-operated valve changes identified in Table 2.7.1.10-1 as having an active safety function position as identified in Table 2.7.1.10-1 under preoperational test conditions.
	14.iii Inspections will be performed of the as-built air-operated valves identified in Table 2.7.1.10-1 as having an active safety function.	14.iii Each as-built air-operated valve identified in Table 2.7.1.10-1 as having an active safety function is bounded by the type tests, or a combination of type tests and analyses.

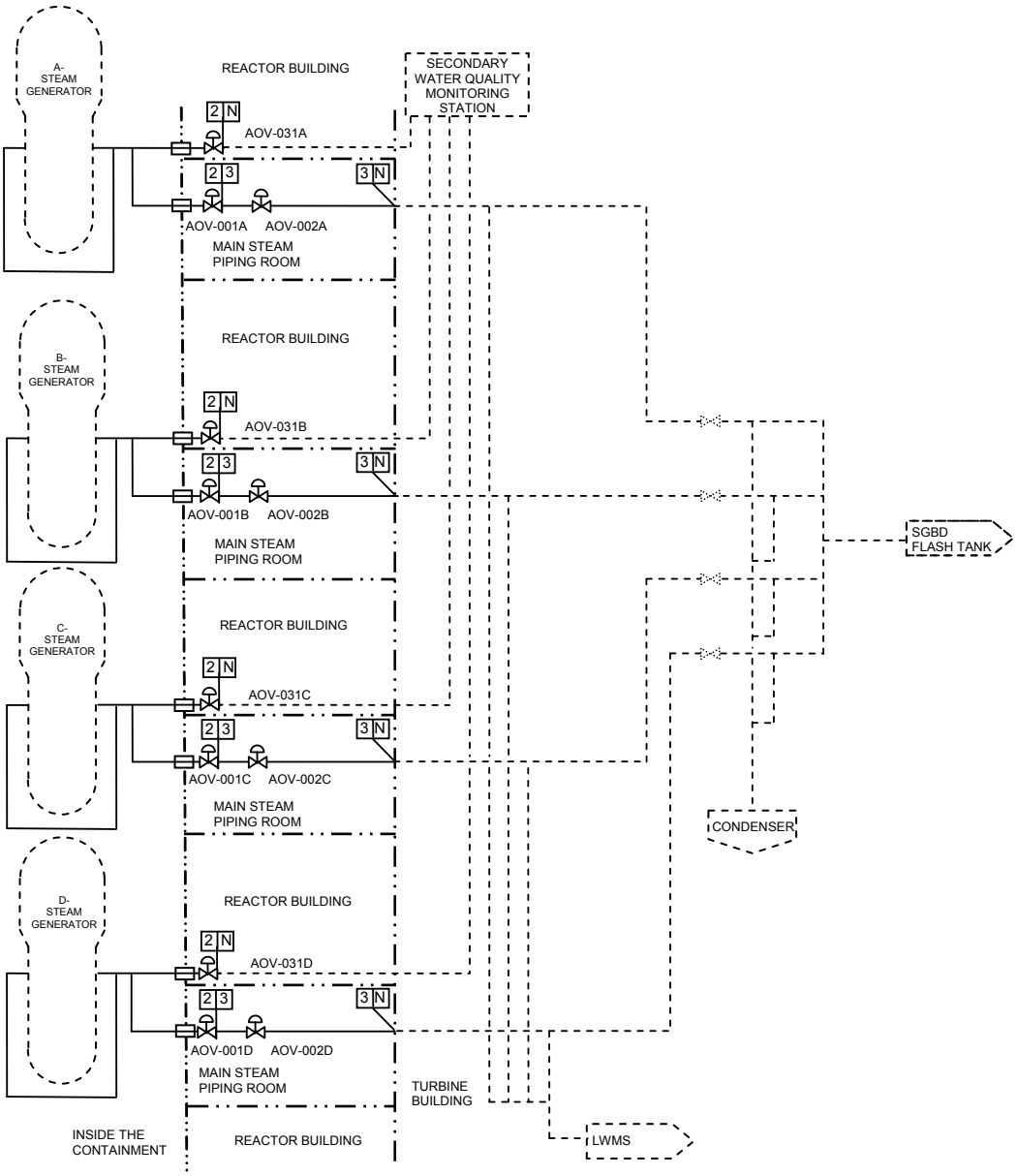

REMARK
System Code is omitted from valve numbers in this figure.

~~SGS~~ ###-+++

Figure 2.7.1.10-1 Steam Generator Blowdown System

2.7.1.11 Emergency Feedwater System (EFWS)

2.7.1.11.1 Design Description

The EFWS is a safety-related system. The EFWS supplies feedwater to the steam generators (SGs) when the main feedwater system is not in operation for transient conditions or postulated accidents.

The EFWS provides the containment isolation function, as described in Section 2.11.2, of the EFWS lines penetrating the containment.

The EFWS consists of two motor-driven (M/D) emergency feedwater (EFW) pumps, two turbine-driven (T/D) EFW pumps, two EFW pits, piping, valves and associated instrumentation. Each EFW pump has 50 percent capacity.

Each EFW pump discharge line connects to a tie line with motor-operated isolation valves. During normal plant operation, all the isolation valves are closed to provide separation of the four divisions.

The common suction line from each EFW pit is connected by a tie line with two normally closed manual valves.

The EFWS removes reactor core decay heat and sensible heat of the reactor coolant system through the SGs following transient conditions or postulated accidents.

The EFWS automatically terminates EFW flow to a depressurized (faulty) SG and to automatically provide feedwater to the intact SGs.

1.a The functional arrangement of the EFWS is as described in the Design Description of Subsection 2.7.1.11.1 and in Table 2.7.1.11-1, and as shown in Figure 2.7.1.11-1.

1.b Each EFW pump(A, B, C and D) is physically separated from the other pumps so as not to preclude accomplishment of the safety function.

1.c The A&B EFW isolation valves and EFW control valves are physically separated from the C&D EFW isolation valves and EFW control valves so as not to preclude accomplishment of the safety function.

1.d The A EFW pump actuation valve and EFW pump main steam isolation valve are physically separated from the D EFW pump actuation valve and EFW pump main steam isolation valve so as not to preclude accomplishment of the safety function.

2.a.i The ASME Code Section III components of the EFWS, identified in Table 2.7.1.11-2, are fabricated, installed, and inspected in accordance with ASME Code Section III requirements.

2.a.ii The ASME Code Section III components of the EFWS identified in Table 2.7.1.11-2 are reconciled with the design requirements.

2.b.i The ASME Code Section III piping of the EFWS, including supports, identified in Table 2.7.1.11-3, is fabricated, installed, and inspected in accordance with ASME Code Section III requirements.

2.b.ii The ASME Code Section III piping of the EFWS, including supports, identified in Table 2.7.1.11-3, is reconciled with the design requirements.

3.a Pressure boundary welds in ASME Code Section III components, identified in Table 2.7.1.11-2, meet ASME Code Section III requirements for non-destructive examination of welds.

3.b Pressure boundary welds in ASME Code Section III piping, identified in Table 2.7.1.11-3, meet ASME Code Section III requirements for non-destructive examination of welds.

4.a The ASME Code Section III components, identified in Table 2.7.1.11-2, retain their pressure boundary integrity at their design pressure.

4.b The ASME Code Section III piping, identified in Table 2.7.1.11-3, retains its pressure boundary integrity at its design pressure.

5.a The seismic Category I equipment identified in Table 2.7.1.11-2 can withstand seismic design basis loads without loss of safety function.

5.b The seismic Category I piping, including supports, identified in Table 2.7.1.11-3 can withstand seismic design basis loads without a loss of its safety function.

6.a The Class 1E equipment identified in Table 2.7.1.11-2 as being qualified for a harsh environment can withstand the environmental conditions that would exist before, during, and following a design basis accident without loss of safety function for the time required to perform the safety function.

6.b Class 1E equipment, identified in Table 2.7.1.11-2, is powered from its respective Class 1E division.

6.c Separation is provided between redundant divisions of EFWS Class 1E divisions, and between Class 1E cables and non-Class 1E cables.

7. Deleted.

8.a Controls are provided in the MCR to open and close the remotely operated valves identified in Table 2.7.1.11-2.

8.b The remotely operated valves identified in Table 2.7.1.11-2 as having PSMS control perform an active safety function after receiving a signal from PSMS.

9.a The motor-operated valves and check valves, identified in Table 2.7.1.11-2, as having an active safety function perform an active safety function to change position as indicated in the table.

9.b After loss of motive power, the remotely operated valves, identified in Table 2.7.1.11-2, assume the indicated loss of motive power position.

10. Alarms and displays identified in Table 2.7.1.11-4 are provided in the MCR.

11. Alarms, displays and controls identified in Table 2.7.1.11-4 are provided in the RSC.

12. Each EFW pump delivers at least the minimum flow required for removal of core decay heat using the SGs against a SG pressure up to the set pressure of the first stage of main steam safety valve plus 3 percent.

13. The EFWS has the capability to permit operation at hot shutdown for eight hours followed by six hours of cooldown to the initiation temperature of the residual heat removal system.

14. The EFW pumps have sufficient net positive suction head (NPSH).

15. The EFW control valves limit maximum flow to each SG to less than the EFW pump design value.

16. Deleted.

17. The pumps identified in Table 2.7.1.11-2 as having PSMS control perform an active safety function after receiving a signal from PSMS.

18. Controls are provided in the MCR to start and stop the EFW pumps identified in Table 2.7.1.11-4.

2.7.1.11.2 Inspections, Tests, Analyses, and Acceptance Criteria

Table 2.7.1.11-5 describes the ITAAC for the EFWS.

The ITAAC associated with the EFWS equipment, components, and piping that comprise a portion of the CIS are described in Table 2.11.2-2.

Table 2.7.1.11-1 Emergency Feedwater System Location of Equipment and Piping (Sheet 1 of 3)

System and Components	Location
A, B-Emergency feedwater pits	Reactor Building
A-emergency feedwater pump (turbine-driven)	Reactor Building
B-emergency feedwater pump (motor-driven)	Reactor Building
C-emergency feedwater pump (motor-driven)	Reactor Building
D-emergency feedwater pump (turbine–driven)	Reactor Building
A-emergency feedwater control valve	Reactor Building
B-emergency feedwater control valve	Reactor Building
C-emergency feedwater control valve	Reactor Building
D-emergency feedwater control valve	Reactor Building
A-emergency feedwater isolation valve	Reactor Building
B-emergency feedwater isolation valve	Reactor Building
C-emergency feedwater isolation valve	Reactor Building
D-emergency feedwater isolation valve	Reactor Building
A-emergency feedwater pump (turbine driven) actuation valves	Reactor Building
A-emergency feedwater pump (turbine driven) A-main steam line steam isolation valve	Reactor Building
A-emergency feedwater pump (turbine driven) B-main steam line steam isolation valve	Reactor Building
D-emergency feedwater pump (turbine driven) actuation valves	Reactor Building
D-emergency feedwater pump (turbine driven) C-main steam line steam isolation valve	Reactor Building
D-emergency feedwater pump (turbine driven) D-main steam line steam isolation valve	Reactor Building
A-emergency feedwater pump discharge tie line isolation valve	Reactor Building
B-emergency feedwater pump discharge tie line isolation valve	Reactor Building
C-emergency feedwater pump discharge tie line isolation valve	Reactor Building
D-emergency feedwater pump discharge tie line isolation valve	Reactor Building
EFW pump suction tie line	Reactor Building
EFW pump suction line from EFW pit to A-EFW pump	Reactor Building
EFW pump suction line from EFW pit to B-EFW pump	Reactor Building
EFW pump suction line from EFW pit to C-EFW pump	Reactor Building
EFW pump suction line from EFW pit to D-EFW pump	Reactor Building

Table 2.7.1.11-1 Emergency Feedwater System Location of Equipment and Piping (Sheet 2 of 3)

System and Components	Location
EFW pump discharge tie line	Reactor Building
A-EFW pump discharge line up to and excluding EFW isolation valve (EFS-MOV-019A)	Reactor Building
B-EFW pump discharge line up to and excluding EFW isolation valve (EFS-MOV-019B)	Reactor Building
C-EFW pump discharge line up to and excluding EFW isolation valve (EFS-MOV-019C)	Reactor Building
D-EFW pump discharge line up to and excluding EFW isolation valve (EFS-MOV-019D)	Reactor Building
A and B-EFW pump mini-flow and full-flow line to EFW pit	Reactor Building
C and D-EFW pump mini-flow and full-flow line to EFW pit	Reactor Building
A-EFW pump turbine steam inlet line from A-main steam line up to and excluding EFS-MOV-101A	Reactor Building
A-EFW pump turbine steam inlet line from B-main steam line up to and excluding EFS-MOV-101B	Reactor Building
D-EFW pump turbine steam inlet line from C-main steam line up to and excluding EFS-MOV-101C	Reactor Building
D-EFW pump turbine steam inlet line from D-main steam line up to and excluding EFS-MOV-101D	Reactor Building
EFW pump turbine steam inlet drain lines up to and including EFS-VLV-109A	Reactor Building
EFW pump turbine steam inlet drain lines up to and including EFS-VLV-109B	Reactor Building
EFW pump turbine steam inlet drain lines up to and including EFS-VLV-109C	Reactor Building
EFW pump turbine steam inlet drain lines up to and including EFS-VLV-109D	Reactor Building

Table 2.7.1.11-1 Emergency Feedwater System Location of Equipment and Piping (Sheet 3 of 3)

System and Components	Location
A-EFW pit discharge check valve	Reactor Building
B-EFW pit discharge check valve	Reactor Building
A-emergency feedwater pump (turbine-driven) discharge check valve	Reactor Building
B-emergency feedwater pump (motor-driven) discharge check valve	Reactor Building
C-emergency feedwater pump (motor-driven) discharge check valve	Reactor Building
D-emergency feedwater pump (turbine-driven) discharge check valve	Reactor Building
A-emergency feedwater pump (turbine-driven) minimum flow line check valve	Reactor Building
B-emergency feedwater pump (motor-driven) minimum flow line check valve	Reactor Building
C-emergency feedwater pump (motor-driven) minimum flow line check valve	Reactor Building
D-emergency feedwater pump (turbine-driven) minimum flow line check valve	Reactor Building
A-emergency feedwater check valve (upstream of EFW control valve)	Reactor Building
B-emergency feedwater check valve (upstream of EFW control valve)	Reactor Building
C-emergency feedwater check valve (upstream of EFW control valve)	Reactor Building
D-emergency feedwater check valve (upstream of EFW control valve)	Reactor Building
A-EFW pump turbine steam inlet line from A-main steam line check valve	Reactor Building
A-EFW pump turbine steam inlet line from B-main steam line check valve	Reactor Building
D-EFW pump turbine steam inlet line from C-main steam line check valve	Reactor Building
D-EFW pump turbine steam inlet line from D-main steam line check valve	Reactor Building
A-EFW pump turbine steam inlet drain line check valve	Reactor Building
D-EFW pump turbine steam inlet drain line check valve	Reactor Building

Table 2.7.1.11-2 Emergency Feedwater System Equipment Characteristics (Sheet 1 of 11)

Equipment Name	Tag No.	ASME Code Section III Class	Seismic Category I	Remotely Operated Valve	Class 1E/Qual. For Harsh Envir.	PSMS Control	Active Safety Function	Loss of Motive Power Position
A-emergency feedwater pump (turbine driven, for inside electrical components)	EFS-MPP-001A	3	Yes	-	Yes/No	Emergency Feedwater Actuation Remote Manual	Start	-
B-emergency feedwater pump (motor driven)	EFS-MPP-001B	3	Yes	-	Yes/No	Emergency Feedwater Actuation Remote Manual	Start	-
C-emergency feedwater pump (motor driven)	EFS-MPP-001C	3	Yes	-	Yes/No	Emergency Feedwater Actuation Remote Manual	Start	-
D-emergency feedwater pump (turbine driven, for inside electrical components)	EFS-MPP-001D	3	Yes	-	Yes/No	Emergency Feedwater Actuation Remote Manual	Start	-
A-emergency feedwater control valve	EFS-MOV-017A	3	Yes	Yes	Yes/Yes	Emergency Feedwater Actuation Emergency Feedwater Isolation Remote Manual	Transfer Open Transfer Closed Transfer Open Transfer Closed	As Is

Table 2.7.1.11-2 Emergency Feedwater System Equipment Characteristics (Sheet 2 of 11)

Equipment Name	Tag No.	ASME Code Section III Class	Seismic Category I	Remotely Operated Valve	Class 1E/Qual. For Harsh Envir.	PSMS Control	Active Safety Function	Loss of Motive Power Position
B-emergency feedwater control valve	EFS-MOV-017B	3	Yes	Yes	Yes/Yes	Emergency Feedwater Actuation	Transfer Open	As Is
						Emergency Feedwater Isolation	Transfer Closed	
						Remote Manual	Transfer Open Transfer Closed	
C-emergency feedwater control valve	EFS-MOV-017C	3	Yes	Yes	Yes/Yes	Emergency Feedwater Actuation	Transfer Open	As Is
						Emergency Feedwater Isolation	Transfer Closed	
						Remote Manual	Transfer Open Transfer Closed	
D-emergency feedwater control valve	EFS-MOV-017D	3	Yes	Yes	Yes/Yes	Emergency Feedwater Actuation	Transfer Open	As Is
						Emergency Feedwater Isolation	Transfer Closed	
						Remote Manual	Transfer Open Transfer Closed	

Table 2.7.1.11-2 Emergency Feedwater System Equipment Characteristics (Sheet 3 of 11)

Equipment Name	Tag No.	ASME Code Section III Class	Seismic Category I	Remotely Operated Valve	Class 1E/Qual. For Harsh Envir.	PSMS Control	Active Safety Function	Loss of Motive Power Position
A-emergency feedwater isolation valve	EFS-MOV-019A	2	Yes	Yes	Yes/Yes	Emergency Feedwater Actuation	Transfer Open	As Is
						Emergency Feedwater Isolation	Transfer Closed	
						Remote Manual	Transfer Open Transfer Closed	
B-emergency feedwater isolation valve	EFS-MOV-019B	2	Yes	Yes	Yes/Yes	Emergency Feedwater Actuation	Transfer Open	As Is
						Emergency Feedwater Isolation	Transfer Closed	
						Remote Manual	Transfer Open Transfer Closed	

Table 2.7.1.11-2 Emergency Feedwater System Equipment Characteristics (Sheet 4 of 11)

Equipment Name	Tag No.	ASME Code Section III Class	Seismic Category I	Remotely Operated Valve	Class 1E/Qual. For Harsh Envir.	PSMS Control	Active Safety Function	Loss of Motive Power Position
C-emergency feedwater isolation valve	EFS-MOV-019C	2	Yes	Yes	Yes/Yes	Emergency Feedwater Actuation	Transfer Open	As Is
						Emergency Feedwater Isolation	Transfer Closed	
						Remote Manual	Transfer Open Transfer Closed	
D-emergency feedwater isolation valve	EFS-MOV-019D	2	Yes	Yes	Yes/Yes	Emergency Feedwater Actuation	Transfer Open	As Is
						Emergency Feedwater Isolation	Transfer Closed	
						Remote Manual	Transfer Open Transfer Closed	

Table 2.7.1.11-2 Emergency Feedwater System Equipment Characteristics (Sheet 5 of 11)

Equipment Name	Tag No.	ASME Code Section III Class	Seismic Category I	Remotely Operated Valve	Class 1E/Qual. For Harsh Envir.	PSMS Control	Active Safety Function	Loss of Motive Power Position
A-emergency feedwater pump actuation valve on A-steam supply line	EFS-MOV-103A	3	Yes	Yes	Yes/Yes	Emergency Feedwater Actuation	Transfer Open	As Is
						Remote Manual	Transfer Closed	
A-emergency feedwater pump actuation valve on B-steam supply line	EFS-MOV-103B	3	Yes	Yes	Yes/Yes	Emergency Feedwater Actuation	Transfer Open	As Is
						Remote Manual	Transfer Closed	
A-emergency feedwater pump A-main steam line steam isolation valve	EFS-MOV-101A	2	Yes	Yes	Yes/Yes	Remote Manual	Transfer Closed	As Is
A-emergency feedwater pump B-main steam line steam isolation valve	EFS-MOV-101B	2	Yes	Yes	Yes/Yes	Remote Manual	Transfer Closed	As Is
D-emergency feedwater pump actuation valve on C-steam supply line	EFS-MOV-103C	3	Yes	Yes	Yes/Yes	Emergency Feedwater Actuation	Transfer Open	As Is
						Remote Manual	Transfer Closed	

Table 2.7.1.11-2 Emergency Feedwater System Equipment Characteristics (Sheet 6 of 11)

Equipment Name	Tag No.	ASME Code Section III Class	Seismic Category I	Remotely Operated Valve	Class 1E/Qual. For Harsh Envir.	PSMS Control	Active Safety Function	Loss of Motive Power Position
D-emergency feedwater pump actuation valve on D-steam supply line	EFS-MOV-103D	3	Yes	Yes	Yes/Yes	Emergency Feedwater Actuation	Transfer Open	As Is
						Remote Manual	Transfer Closed	
D-emergency feedwater pump C-main steam line steam isolation valve	EFS-MOV-101C	2	Yes	Yes	Yes/Yes	Remote Manual	Transfer Closed	As Is
D-emergency feedwater pump D-main steam line steam isolation valve	EFS-MOV-101D	2	Yes	Yes	Yes/Yes	Remote Manual	Transfer Closed	As Is
Emergency feedwater flow	EFS-FT-016, 026, 036, 046	-	Yes	-	Yes/ No	-	-	-
Emergency feedwater pit water level	EFS-LT-060, 061, 070, 071	-	Yes	-	Yes/ No	-	-	-
Emergency feedwater pump discharge pressure	EFS-PT-050, 051, 052, 053	-	Yes	-	Yes/ No	-	-	-

Table 2.7.1.11-2 Emergency Feedwater System Equipment Characteristics (Sheet 7 of 11)

Equipment Name	Tag No.	ASME Code Section III Class	Seismic Category I	Remotely Operated Valve	Class 1E/Qual. For Harsh Envir.	PSMS Control	Active Safety Function	Loss of Motive Power Position
A-EFW pit discharge check valve	EFS-VLV-008A	3	Yes	No	-	-	Transfer Open	-
B-EFW pit discharge check valve	EFS-VLV-008B	3	Yes	No	-	-	Transfer Open	-
A-emergency feedwater pump (turbine-driven) discharge check valve	EFS-VLV-012A	3	Yes	No	-	-	Transfer Open Transfer Closed	-
B-emergency feedwater pump (motor-driven) discharge check valve	EFS-VLV-012B	3	Yes	No	-	-	Transfer Open Transfer Closed	-
C-emergency feedwater pump (motor-driven) discharge check valve	EFS-VLV-012C	3	Yes	No	-	-	Transfer Open Transfer Closed	-
D-emergency feedwater pump (turbine-driven) discharge check valve	EFS-VLV-012D	3	Yes	No	-	-	Transfer Open Transfer Closed	-

Table 2.7.1.11-2 Emergency Feedwater System Equipment Characteristics (Sheet 8 of 11)

Equipment Name	Tag No.	ASME Code Section III Class	Seismic Category I	Remotely Operated Valve	Class 1E/Qual. For Harsh Envir.	PSMS Control	Active Safety Function	Loss of Motive Power Position
A-emergency feedwater pump (turbine-driven) minimum flow line check valve	EFS-VLV-020A	3	Yes	No	-	-	Transfer Open Transfer Closed	-
B-emergency feedwater pump (motor-driven) minimum flow line check valve	EFS-VLV-020B	3	Yes	No	-	-	Transfer Open Transfer Closed	-
C-emergency feedwater pump (motor-driven) minimum flow line check valve	EFS-VLV-020C	3	Yes	No	-	-	Transfer Open Transfer Closed	-
D-emergency feedwater pump (turbine-driven) minimum flow line check valve	EFS-VLV-020D	3	Yes	No	-	-	Transfer Open Transfer Closed	-

Table 2.7.1.11-2 Emergency Feedwater System Equipment Characteristics (Sheet 9 of 11)

Equipment Name	Tag No.	ASME Code Section III Class	Seismic Category I	Remotely Operated Valve	Class 1E/Qual. For Harsh Envir.	PSMS Control	Active Safety Function	Loss of Motive Power Position
A-emergency feedwater check valve (upstream of EFW control valve)	EFS-VLV-018A	3	Yes	No	-	-	Transfer Open Transfer Closed	-
B-emergency feedwater check valve (upstream of EFW control valve)	EFS-VLV-018B	3	Yes	No	-	-	Transfer Open Transfer Closed	-
C-emergency feedwater check valve (upstream of EFW control valve)	EFS-VLV-018C	3	Yes	No	-	-	Transfer Open Transfer Closed	-
D-emergency feedwater check valve (upstream of EFW control valve)	EFS-VLV-018D	3	Yes	No	-	-	Transfer Open Transfer Closed	-

Table 2.7.1.11-2 Emergency Feedwater System Equipment Characteristics (Sheet 10 of 11)

Equipment Name	Tag No.	ASME Code Section III Class	Seismic Category I	Remotely Operated Valve	Class 1E/Qual. For Harsh Envir.	PSMS Control	Active Safety Function	Loss of Motive Power Position
A-EFW pump turbine steam inlet line from A-main steam line check valve	EFS-VLV-102A	3	Yes	No	-	-	Transfer Open Transfer Closed	-
A-EFW pump turbine steam inlet line from B-main steam line check valve	EFS-VLV-102B	3	Yes	No	-	-	Transfer Open Transfer Closed	-
D-EFW pump turbine steam inlet line from C-main steam line check valve	EFS-VLV-102C	3	Yes	No	-	-	Transfer Open Transfer Closed	-
D-EFW pump turbine steam inlet line from D-main steam line check valve	EFS-VLV-102D	3	Yes	No	-	-	Transfer Open Transfer Closed	-

Table 2.7.1.11-2 Emergency Feedwater System Equipment Characteristics (Sheet 11 of 11)

Equipment Name	Tag No.	ASME Code Section III Class	Seismic Category I	Remotely Operated Valve	Class 1E/Qual. For Harsh Envir.	PSMS Control	Active Safety Function	Loss of Motive Power Position
A, B-EFW pump turbine steam inlet drain line check valve	EFS-VLV-109A, B	3	Yes	No	-	-	Transfer Open Transfer Closed	-
C, D-EFW pump turbine steam inlet drain line check valve	EFS-VLV-109C, D	3	Yes	No	-	-	Transfer Open Transfer Closed	-
A, B-Emergency feedwater pits	MPT-001A, B	-	Yes	-	-/-	-	-	-

Note: Dash (-) indicates not applicable

Table 2.7.1.11-3 Emergency Feedwater System Piping Characteristics

Pipe Line Name	ASME Code Section III Class	Leak Before Break	Seismic Category I
EFW pump suction tie line	3	No	Yes
EFW pump suction line from EFW pit to A-EFW pump	3	No	Yes
EFW pump suction line from EFW pit to B-EFW pump	3	No	Yes
EFW pump suction line from EFW pit to C-EFW pump	3	No	Yes
EFW pump suction line from EFW pit to D-EFW pump	3	No	Yes
EFW pump discharge tie line	3	No	Yes
A-EFW pump discharge line up to and excluding EFW isolation valve (EFS-MOV-019A)	3	No	Yes
B-EFW pump discharge line up to and excluding EFW isolation valve (EFS-MOV-019B)	3	No	Yes
C-EFW pump discharge line up to and excluding EFW isolation valve (EFS-MOV-019C)	3	No	Yes
D-EFW pump discharge line up to and excluding EFW isolation valve (EFS-MOV-019D)	3	No	Yes
A and B-EFW pump mini-flow and full-flow line to EFW pit	3	No	Yes
C and D-EFW pump mini-flow and full-flow line to EFW pit	3	No	Yes
A-EFW pump turbine steam inlet line from A-main steam line up to and excluding EFS-MOV-101A	3	No	Yes
A-EFW pump turbine steam inlet line from B-main steam line up to and excluding EFS-MOV-101B	3	No	Yes
D-EFW pump turbine steam inlet line from C-main steam line up to and excluding EFS-MOV-101C	3	No	Yes
D-EFW pump turbine steam inlet line from D-main steam line up to and excluding EFS-MOV-101D	3	No	Yes
EFW pump turbine steam inlet drain lines up to and including EFS-VLV-109A	3	No	Yes
EFW pump turbine steam inlet drain lines up to and including EFS-VLV-109B	3	No	Yes
EFW pump turbine steam inlet drain lines up to and including EFS-VLV-109C	3	No	Yes
EFW pump turbine steam inlet drain lines up to and including EFS-VLV-109D	3	No	Yes

Table 2.7.1.11-4 Emergency Feedwater System Equipment Alarms, Displays, and Control Functions

Equipment/Instrument Name	MCR/RSC Alarm	MCR Display	MCR/RSC Control Function	RSC Display
Emergency feedwater pump (EFS-MPP-001A, B, C, D)	No	Yes	Yes	Yes
Emergency feedwater control valves (EFS-MOV-017A, B, C, D)	No	Yes	Yes	Yes
Emergency feedwater isolation valves (EFS-MOV-019A, B, C,D)	No	Yes	Yes	Yes
Emergency feeedwater pump actuation valves (EFS-MOV-103A, B, C, D)	No	Yes	Yes	Yes
A-EFW pump main steam line steam isolation valve (EFS-MOV-101A, B)	No	Yes	Yes	Yes
D-EFW pump main steam line steam isolation valve (EFS-MOV-101C, D)	No	Yes	Yes	Yes
Emergency feedwater pit water level (EFS-LT-060, 061, 070, 071)	Yes	Yes	No	Yes
Emergency feedwater flow (EFS-FT-016, 026, 036, 046)	No	Yes	No	Yes
Emergency feedwater pump discharge pressure (EFS-PI-050, 051, 052, 053)	No	Yes	No	Yes

Table 2.7.1.11-5 Emergency Feedwater System Inspections, Tests, Analyses, and Acceptance Criteria (Sheet 1 of 9)

Design Commitment	Inspections, Tests, Analyses	Acceptance Criteria
1.a The functional arrangement of the EFWS is as described in the Design Description of Subsection 2.7.1.11.1 and in Table 2.7.1.11-1 and as shown in Figure 2.7.1.11-1.	1.a Inspection of the as-built EFWS system will be performed.	1.a The as-built EFWS conforms to the functional arrangement as described in the Design Description of Subsection 2.7.1.11.1 and in Table 2.7.1.11-1 and as shown in Figure 2.7.1.11-1.
1.b Each EFW pump(A, B, C and D) is physically separated from the other pumps so as not to preclude accomplishment of the safety function.	1.b Inspection and analysis of as-built EFWS will be performed.	1.b A report exists and concludes that each EFW pump (A, B, C and D) is physically separated from the other pumps by spatial separation, barriers or enclosures so as to assure that the functions of the safety-related system are maintained.
1.c The A&B EFW isolation valves and EFW control valves are physically separated from the C&D EFW isolation valves and EFW control valves so as not to preclude accomplishment of the safety function.	1.c Inspection and analysis of as-built EFWS will be performed.	1.c The A&B EFW isolation valves and EFW control valves are physically separated from the C&D EFW isolation valves and EFW control valves by spatial separation, barriers or enclosures so as to assure that the functions of the safety-related system are maintained.
1.d The A EFW pump actuation valve and EFW pump main steam isolation valve are physically separated from the D EFW pump actuation valve and EFW pump main steam isolation valve so as not to preclude accomplishment of the safety function.	1.d Inspection and analysisof as-built EFWS will be performed.	1.d A report exists and concludes that the A EFW pump actuation valve and EFW pump main steam isolation valve are physically separated from the D EFW pump actuation valve and EFW pump main steam isolation valve by spatial separation, barriers or enclosures so as to assure that the functions of the safety-related system are maintained.

Table 2.7.1.11-5 Emergency Feedwater System Inspections, Tests, Analyses, and Acceptance Criteria (Sheet 2 of 9)

Design Commitment	Inspections, Tests, Analyses	Acceptance Criteria
2.a.i The ASME Code Section III components of the EFWS, identified in Table 2.7.1.11-2, are fabricated, installed, and inspected in accordance with ASME Code Section III requirements.	2.a.i An inspection of the as-built ASME Code Section III components of the EFWS identified in Table2.7.1.11-2 will be performed.	2.a.i The ASME Code Section III data report(s) (certified, when required by ASME Code) and inspection reports (including N-5 Data Reports where applicable) exist and conclude that the as-built ASME Code Section III components of the EFWS identified in Table 2.7.1.11-2 are fabricated, installed, and inspected in accordance with ASME Code Section III requirements.
2.a.ii The ASME Code Section III components of the EFWS identified in Table 2.7.1.11-2 are reconciled with the design requirements.	2.a.ii A reconciliation analysis of the components identified in Table 2.7.1.11-2 using as-designed and as-built information and ASME Code Section III design report(s) (NCA-3550) will be performed.	2.a.ii The ASME Code Section III design report(s) (certified, when required by ASME Code) exist and conclude that the design reconciliation has been completed in accordance with the ASME Code for the as-built ASME Code Section III components of the EFWS identified in Table 2.7.1.11-2. The report documents the results of the reconciliation analysis.
2.b.i The ASME Code Section III piping of the EFWS, including supports, identified in Table 2.7.1.11-3, is fabricated, installed, and inspected in accordance with ASME Code Section III requirements.	2.b.i Inspection of the as-built ASME Code Section III piping of the EFWS, including supports, identified in Table 2.7.1.11-3 will be performed.	2.b.i The ASME Code Section III data report(s) (certified, when required by ASME Code) and inspection reports (including N-5 Data Reports where applicable) exist and conclude that the as-built ASME Code Section III piping of the EFWS, including supports, identified in Table 2.7.1.11-3 is fabricated, installed, and inspected in accordance with ASME Code Section III requirements.

Table 2.7.1.11-5 Emergency Feedwater System Inspections, Tests, Analyses, and Acceptance Criteria (Sheet 3 of 9)

Design Commitment	Inspections, Tests, Analyses	Acceptance Criteria
2.b.ii The ASME Code Section III piping of the EFWS, including supports, identified in Table 2.7.1.11-3, is reconciled with the design requirements.	2.b.ii A reconciliation analysis of the piping of the EFWS, including supports, identified in Table 2.7.1.11-3, using as-designed and as-built information and ASME Code Section III design report(s) (NCA-3550) will be performed.	2.b.ii The ASME Code Section III design report(s) (certified, when required by ASME Code) exist and conclude that the design reconciliation has been completed in accordance with the ASME Code, for the as-built ASME Code Section III piping of the CCWS, including supports, identified in Table 2.7.1.11-3 . The report documents the results of the reconciliation analysis.
3.a Pressure boundary welds in ASME Code Section III components, identified in Table 2.7.1.11-2, meet ASME Code Section III requirements for non-destructive examination of welds.	3.a Inspections of the as-built pressure boundary welds in ASME Code Section III components identified in Table 2.7.1.11-2 will be performed in accordance with the ASME Code Section III	3.a The ASME Code Section III code reports exist and conclude that the ASME Code Section III requirements are met for non-destructive examination of the as-built pressure boundary welds in ASME Code Section III components identified in Table 2.7.1.11-2.
3.b Pressure boundary welds in ASME Code Section III piping, identified in Table 2.7.1.11-3, meet ASME Code Section III requirements for non-destructive examination of welds.	3.b Inspections of the as-built pressure boundary welds in ASME Code Section III piping identified in Table 2.7.1.11-3 will be performed in accordance with the ASME Code Section III.	3.b The ASME Code Section III code reports exist and conclude that the ASME Code Section III requirements are met for non-destructive examination of the as-built pressure boundary welds in ASME Code Section III piping identified in Table 2.7.1.11-3.
4.a The ASME Code Section III components, identified in Table 2.7.1.11-2, retain their pressure boundary integrity at their design pressure.	4.a A hydrostatic test will be performed on the as-built components identified in Table 2.7.1.11-2 required by the ASME Code Section III to be hydrostatically tested.	4.a ASME Code Data Reports exist and conclude that the results of the hydrostatic test of the as-built components identified in Table 2.7.1.11-2 as ASME Code Section III conform to the requirements of the ASME Code Section III.

Table 2.7.1.11-5 Emergency Feedwater System Inspections, Tests, Analyses, and Acceptance Criteria (Sheet 4 of 9)

Design Commitment	Inspections, Tests, Analyses	Acceptance Criteria
4.b The ASME Code Section III piping, identified in Table 2.7.1.11-3, retains its pressure boundary integrity at its design pressure.	4.b A hydrostatic test will be performed on the as-built piping identified in Table 2.7.1.11-2 required by the ASME Code Section III to be hydrostatically tested.	4.b ASME Code Data Reports exist and conclude that the results of the hydrostatic test of the as-built piping identified in Table 2.7.1.11-3 as ASME Code Section III conform to the requirements of the ASME Code Section II.
5.a The seismic Category I equipment identified in Table 2.7.1.11-2 can withstand seismic design basis loads without loss of safety function.	5.a.i Inspections will be performed to verify that the as-built seismic Category I equipment identified in Table 2.7.1.11-2 is located in a seismic Category I structure.	5.a.i The seismic Category I as-built equipment identified in Table 2.7.1.11-2 is located in a seismic Category I structure.
	5.a.ii Type tests, analyses, or a combination of type tests and analyses of seismic Category I equipment identified in Table 2.7.1.11-2 will be performed using analytical assumptions, or will be performed under conditions, which bound the seismic design basis requirements.	5.a.ii A report exists and concludes that the seismic Category I equipment identified in Table 2.7.1.11-2 can withstand seismic design basis loads without loss of safety function.
	5.a.iii Inspections and analyses will be performed to verify that the as-built seismic Category I equipment identified in Table 2.7.1.11-2, including anchorages, is seismically bounded by the tested or analyzed conditions.	5.a.iii A report exists and concludes that the as-built seismic Category I equipment identified in Table 2.7.1.11-2, including anchorages, is seismically bounded by the tested or analyzed conditions
5.b The seismic Category I piping, including supports, identified in Table 2.7.1.11-3 can withstand seismic design basis loads without a loss of its safety function.	5.b.i Inspections and analyses will be performed to verify that the as-built seismic Category I piping, including supports, identified in Table 2.7.1.11-3 is supported by a seismic Category I structure(s).	5.b.i The as-built seismic Category I piping, including supports, identified in Table 2.7.1.11-3 is supported by a seismic Category I structure(s).

Table 2.7.1.11-5 Emergency Feedwater System Inspections, Tests, Analyses, and Acceptance Criteria (Sheet 5 of 9)

Design Commitment	Inspections, Tests, Analyses	Acceptance Criteria
	5.b.ii Inspections and analyses will be performed to verify that the as-built seismic Category I piping, including supports, identified in Table 2.7.1.11-3 can withstand seismic design basis loads without a loss of its safety function.	5.b.ii A report exists and concludes that the as-built seismic Category I piping, including supports, identified in Table 2.7.1.11-3 can withstand seismic design basis loads without a loss of its safety function.
6.a The Class 1E equipment identified in Table 2.7.1.11-2 as being qualified for a harsh environment can withstand the environmental conditions that would exist before, during, and following a design basis accident without loss of safety function for the time required to perform the safety function.	6.a.i Type tests or a combination of type tests and analyses using the design environmental conditions, or under the conditions which bound the design environmental conditions, will be performed on Class 1E equipment identified in Table 2.7.1.11-2 as being qualified for a harsh environment	6.a.i A report exists and concludes that the Class 1E equipment identified in Table 2.7.1.11-2 as being qualified for a harsh environment can withstand the environmental conditions that would exist before, during, and following a design basis accident without loss of safety function for the time required to perform the safety function.
	6.a.ii Inspection will be performed on the as-built Class 1E equipment identified in Table 2.7.1.11-2 as being qualified for a harsh environment and the associated wiring, cables, and terminations located in a harsh environment.	6.a.ii The as-built Class 1E equipment and the associated wiring, cables, and terminations identified in Table 2.7.1.11-2 as being qualified for a harsh environment are bounded by type tests, or a combination of type tests and analyses.
6.b Class 1E equipment, identified in Table 2.7.1.11-2, is powered from its respective Class 1E division.	6.b A test will be performed on each division of the as-built Class 1E equipment identified in Table 2.7.1.11-2 by providing a simulated test signal only in the Class 1E division under test.	6.b The simulated test signal exists at the as-built Class 1E equipment identified in Table 2.7.1.11-2 under test.
6.c Separation is provided between redundant divisions of EFWS Class 1E cables, and between Class 1E cables and non-Class 1E cable.	6.c Inspections of the as-built Class 1E divisional cables will be performed.	6.c Physical separation or electrical isolation is provided in accordance with RG 1.75 between the as-built cables of redundant EFWS Class 1E divisions and between Class 1E cables and non-Class 1E cables.
7. Deleted.	7. Deleted.	7. Deleted.

Table 2.7.1.11-5 Emergency Feedwater System Inspections, Tests, Analyses, and Acceptance Criteria (Sheet 6 of 9)

Design Commitment	Inspections, Tests, Analyses	Acceptance Criteria
8.a Controls are provided in the MCR to open and close the remotely operated valves identified in Table 2.7.1.11-2.	8.a Tests will be performed on the as-built remotely operated valves identified in Table 2.7.1.11-2 using controls in the as-built MCR.	8.a Controls in the as-built MCR open and close the as-built remotely operated valves identified in Table 2.7.1.11-2.
8.b The remotely operated valves identified in Table 2.7.1.11-2 as having PSMS control perform an active safety function after receiving a signal from PSMS.	8.b.i Tests will be performed on the as-built remotely operated valves identified in Table 2.7.1.11-2 as having PSMS control using simulated signals.	8.b.i The as-built remotely operated valves identified in Table 2.7.1.11-2 as having PSMS control perform the active function identified in the table after receiving a simulated signal.
	8.b.ii Tests will be performed to demonstrate that remotely operated as-built EFW control valves and EFW isolation valves identified in Table 2.7.1.11-2 close within the required response time under preoperational conditions.	8.b.ii The as-built valves identified in Table 2.7.1.11-2 as having PSMS control close within the following times after receipt of a simulated actuation signal. The as-built EFW control valves (EFS-MOV-017A, EFS-MOV-017B, EFS-MOV-017C, EFS-MOV-017D) close within 20 seconds. The as-built EFW isolation valves (EFS-MOV-019A, EFS-MOV-019B, EFS-MOV-019C, EFS-MOV-019D) close within 20 seconds.
9.a The motor-operated valves and check valves, identified in Table 2.7.1.11-2, as having an active safety function perform an active safety function to change position as indicated in the table.	9.a.i Type tests or a combination of type tests and analyses of the motor-operated valves identified in Table 2.7.1.11-2 as having an active safety function will be performed that demonstrate the capability of the valve to operate under its design conditions.	9.a.i A report exists and concludes that each motor-operated valve identified in Table 2.7.1.11-2 as having an active safety function changes position as indicated in Table 2.7.1.11-2 under design conditions.

Table 2.7.1.11-5 Emergency Feedwater System Inspections, Tests, Analyses, and Acceptance Criteria (Sheet 7 of 9)

Design Commitment	Inspections, Tests, Analyses	Acceptance Criteria
	9.a.ii Tests of the as-built motor-operated valves identified in Table 2.7.1.11-2 as having an active safety function will be performed under preoperational flow, differential pressure, and temperature conditions.	9.a.ii Each as-built motor-operated valve changes position as indicated in Table 2.7.1.11-2 as having an active safety function under preoperational test conditions.
	9.a.iii Inspections will be performed of the as-built motor-operated valves identified in Table 2.7.1.11-2 as having an active safety function .	9.a.iii Each as-built motor-operated valve identified in Table 2.7.1.11-2 as having an active safety function is bounded by the type tests, or a combination of type tests and analyses.
	9.a.iv Tests of the as-built check valves identified in Table 2.7.1.11-2 as having an active safety function will be performed under preoperational test pressure, temperature, and fluid flow conditions.	9.a.iv Each as-built check valve identified in Table 2.7.1.11-2 as having an active safety function changes position as indicated in Table 2.7.1.11-2 under preoperational conditions.
9.b After loss of motive power, the remotely operated valves, identified in Table 2.7.1.11-2, assume the indicated loss of motive power position.	9.b Tests of the as-built remotely operated valves identified in Table 2.7.1.11-2 will be performed under the conditions of loss of motive power.	9.b Upon loss of motive power, each as-built remotely operated valve identified in Table 2.7.1.11-2 assumes the indicated loss of motive power position.
10. Alarms and displays identified in Table 2.7.1.11-4 are provided in the MCR.	10. Inspections will be performed for retrievability of the alarms and displays identified in Table 2.7.1.11-4 in the as-built MCR	10. Alarms and displays identified in Table 2.7.1.11-4 can be retrieved in the as-built MCR.
11. Alarms, displays and controls identified in Table 2.7.1.11-4 are provided in the RSC.	11.i Inspection will be performed for retrievability of the alarms and displays identified in Table 2.7.1.11-4 in the as-built RSC.	11.i Alarms and displays identified in Table 2.7.1.11-4 can be retrieved in the as-built RSC.
	11.ii Tests of the as-built RSC control functions identified in Table 2.7.1.11-4 will be performed.	11.ii Controls in the as-built RSC operate the as-built equipment identified in Table 2.7.1.11-4 with an RSC control function.

Table 2.7.1.11-5 Emergency Feedwater System Inspections, Tests, Analyses, and Acceptance Criteria (Sheet 8 of 9)

Design Commitment	Inspections, Tests, Analyses	Acceptance Criteria
12. Each EFW pump delivers at least the minimum flow required for removal of core decay heat using the SGs against a SG pressure up to the set pressure of the first stage of main steam safety valve plus 3 percent.	12 A test of each as-built EFW pump will be performed to determine system flow vs. SG pressure under preoperational condition. Analyses will be performed to convert the test results to the design conditions.	12 A report exists and concludes that any combination of two of the four as-built EFW pumps delivers at least 705 gpm to any combination of two of the four SGs against a SG pressure of 1185 psig plus 3 percent.
13. The EFWS has the capability to permit operation at hot shutdown for eight hours followed by six hours of cooldown to the initiation temperature of the residual heat removal system.	13. Inspections and analyses will be performed to verify the usable volume of the as-built EFW pits.	13. A report exists and concludes that the usable water volume of the each as-built EFW pit is ≥ 204,850 gallons.
14. The EFW pumps have sufficient net positive suction head (NPSH).	14 Tests to measure the as-built EFW pump suction pressure will be performed. Inspections and analysis to determine NPSH available to each EFW pump will be performed. The analysis will consider vendor test results of required NPSH and the effect of: – pressure losses for pump inlet piping and components, – suction from the EFW pit water level at the minimum value	14 A report exists and concludes that the NPSH available exceeds the required NPSH.
15. The EFW control valves limit maximum flow to each SG to less than the EFW pump design value.	15. A test of each as-built EFW pump will be performed to determine system flow vs. SG pressure under preoperational condition. Analyses will be performed to convert the test results to the design conditions.	15. A report exists and concludes that the EFW control valve pre-set open position limits the EFW flow rate to the steam generator to equal to or less than 400 gpm with a SG pressure of 1221 psig .
16. Deleted.	16. Deleted.	16. Deleted.
17. The pumps identified in Table 2.7.1.11-2 as having PSMS control perform an active safety function after receiving a signal from PSMS.	17. Tests will be performed on the as-built pumps identified in Table 2.7.1.11-2 using simulated signals.	17. The as-built pumps identified in Table 2.7.1.11-2 as having PSMS control perform the active safety function identified in the table after receiving a simulated signal.

Table 2.7.1.11-5 Emergency Feedwater System Inspections, Tests, Analyses, and Acceptance Criteria (Sheet 9 of 9)

Design Commitment	Inspections, Tests, Analyses	Acceptance Criteria
18. Controls are provided in the MCR to start and stop the EFW pumps identified in Table 2.7.1.11-4.	18. Tests will be performed on the as-built EFW pumps identified in Table 2.7.1.11-4 using controls in the as-built MCR.	18. Controls in the as-built MCR start and stop the as-built EFW pumps identified in Table 2.7.1.11-4.

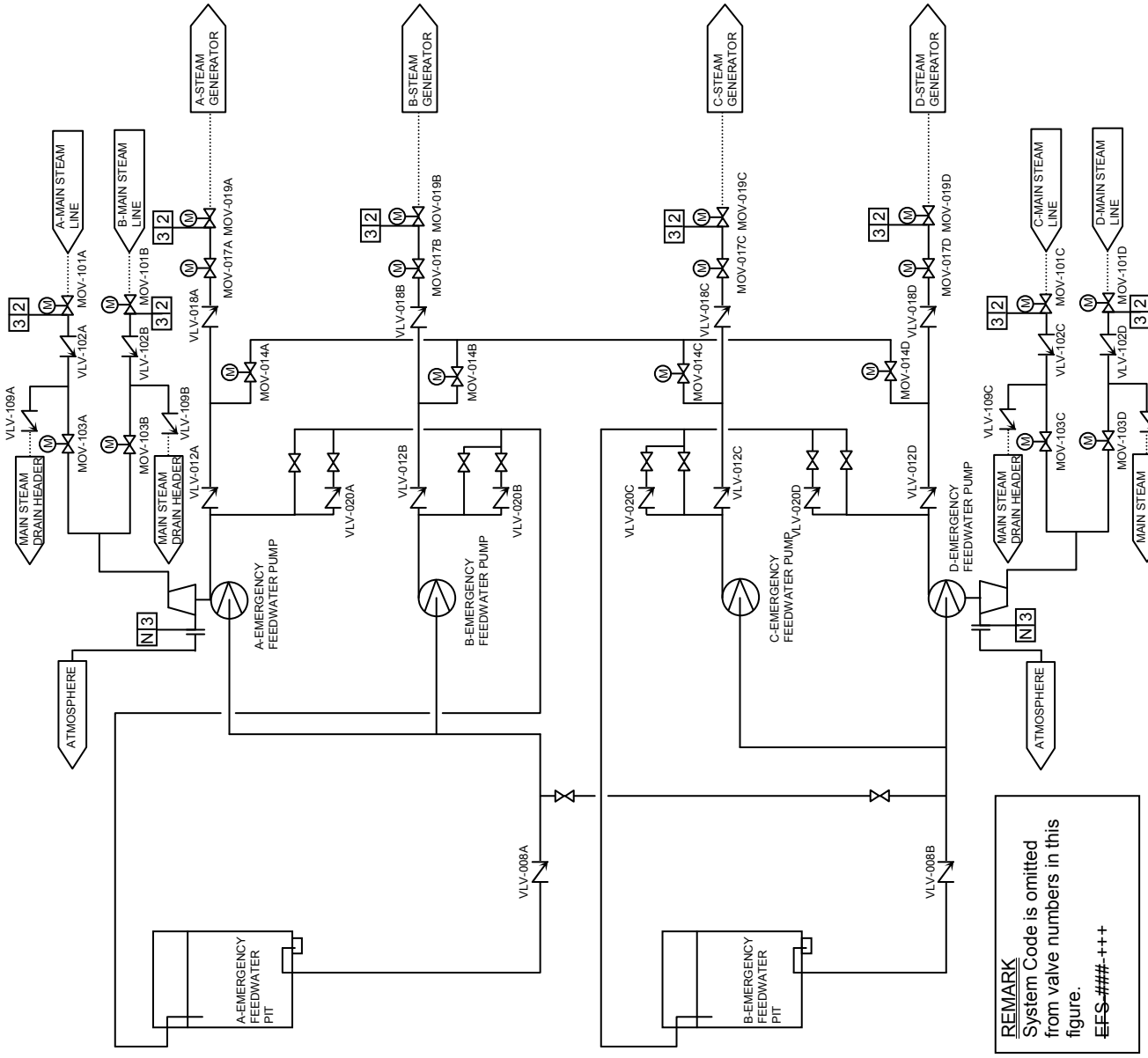

Figure 2.7.1.11-1 Emergency Feedwater System

2.7.1.12 Secondary Side Chemical Injection System (SCIS)

This system does not require ITAAC.

2.7.1.13 Auxiliary Steam Supply System (ASSS)

This system does not require ITAAC.

2.7.2 Compressed Air and Gas Systems (CAGS)

This system does not require ITAAC.

2.7.3 Cooling Water Systems

2.7.3.1 Essential Service Water System (ESWS)

2.7.3.1.1 Design Description

The essential service water system (ESWS) is a safety-related system that provides cooling water to the component cooling water (CCW) heat exchangers and the essential chiller units. The ESWS transfers the heat from these components to the ultimate heat sink (UHS).

The ESWS consists of four independent divisions with each division providing fifty percent (50%) of the cooling capacity required for design basis accidents and for safe shutdown. Each essential service water pump (ESWP) discharge line is provided with two (2) 100% capacity strainers.

1.a The functional arrangement of the ESWS is as described in the Design Description of Subsection 2.7.3.1.1 and in Table 2.7.3.1-1 and as shown in Figure 2.7.3.1-1.

1.b Each mechanical division of the ESWS (Division A, B, C & D) except for piping is physically separated from the other divisions so as not to preclude accomplishment of the safety function.

2.a.i The ASME Code Section III components of the ESWS, identified in Table 2.7.3.1-2, are fabricated, installed, and inspected in accordance with ASME Code Section III requirements.

2.a.ii The ASME Code Section III components of the ESWS identified in Table 2.7.3.1-2 are reconciled with the design requirements.

2.b.i The ASME Code Section III piping of the ESWS, including supports, identified in Table 2.7.3.1-3, is fabricated, installed, and inspected in accordance with ASME Code Section III requirements.

2.b.ii The ASME Code Section III piping of the ESWS, including supports, identified in Table 2.7.3.1-3 is reconciled with the design requirements.

3.a Pressure boundary welds in ASME Code Section III components, identified in Table 2.7.3.1-2, meet ASME Code Section III requirements for non-destructive examination of welds.

3.b Pressure boundary welds in ASME Code Section III piping, identified in Table 2.7.3.1-3, meet ASME Code Section III requirements for non-destructive examination of welds.

4.a The ASME Code Section III components, identified in Table 2.7.3.1-2, retain their pressure boundary integrity at their design pressure.

4.b The ASME Code Section III piping, identified in Table 2.7.3.1-3, retains its pressure boundary integrity at its design pressure.

5.a The seismic Category I equipment identified in Table 2.7.3.1-2 can withstand seismic design basis loads without loss of safety function.

5.b The seismic Category I piping, including supports, identified in Table 2.7.3.1-3 can withstand seismic design basis loads without a loss of its safety function.

6.a Class 1E equipment identified in Table 2.7.3.1-2 is powered from its respective Class 1E division.

6.b Separation is provided between redundant divisions of ESWS Class 1E cables, and between Class 1E cables and non-Class 1E cables.

7. The ESWS provides cooling water required for the CCW heat exchangers and the essential chiller units of the essential chilled water system (ECWS) during all plant operating conditions, including normal plant operating, abnormal and accident conditions.

8. Controls are provided in the MCR to open and close the remotely operated valves identified in Table 2.7.3.1-2.

9.a The remotely operated valves and check valves, identified in Table 2.7.3.1-2 as having an active safety function, perform an active safety function to change position as indicated in the table.

9.b Upon the receipt of a signal that ESWP has started, the essential service water discharge valve opens automatically. Each pump's discharge valve is interlocked to close when the pump is not running or is tripped.

9.c After loss of motive power, the remotely operated valves, identified in Table 2.7.3.1-2, assume the indicated loss of motive power position.

10.a Controls are provided in the MCR to start and stop the essential service water pumps identified in Table 2.7.3.1-4.

10.b The pumps identified in Table 2.7.3.1-2 as having PSMS control perform an active safety function after receiving a signal from PSMS.

11. Alarms and displays identified in Table 2.7.3.1-4 are provided in the MCR.

12. Alarms, displays, and controls identified in Table 2.7.3.1-4 are provided in the RSC.

13.a Controls are provided in the MCR to place in service or remove from service the strainers identified in Table 2.7.3.1-4.

13.b The strainers identified in Table 2.7.3.1-2 as having PSMS control perform an active safety function after receiving a signal from PSMS.

14 The ESWP discharge strainer backwash isolation valves identified in Table 2.7.3.1-2 as having PSMS control perform an active safety function after receiving a signal from PSMS.

2.7.3.1.2 Inspections, Tests, Analysis, and Acceptance Criteria

Table 2.7.3.1-5 describes the ITAAC for the ESWS.

Table 2.7.3.1-1 Essential Service Water System Location of Equipment and Piping

System and Components	Location
Essential service water pumps	Ultimate heat sink related structures
Essential service water supply header piping and valves	Ultimate heat sink related structures and essential service water pipe tunnel
Essential service water return header piping and valves	Ultimate heat sink related structures and essential service water pipe tunnel
Essential service water pump discharge strainer backwash line	Ultimate heat sink related structures
Essential service water supply line piping and valves to component cooling water heat exchangers	Reactor Building and essential service water pipe tunnel
Essential service water return line piping and valves from component cooling water heat exchangers	Reactor Building and essential service water pipe tunnel
Essential service water supply line piping and valves to essential chiller units	Power Source Building and essential service water pipe tunnel
Essential service water return line piping and valves from essential chiller units	Power Source Building and essential service water pipe tunnel

Table 2.7.3.1-2 Essential Service Water System Equipment Characteristics (Sheet 1 of 2)

Equipment Name	Tag No.	ASME Code Section III Class	Seismic Category I	Remotely Operated Valve	Class 1E/ Qual. For Harsh Envir.	PSMS Control	Active Safety Function	Loss of Motive Power Position
Essential service water pumps	EWS-MPP-001 A, B, C, D	3	Yes	-	Yes/No	ECCS Actuation	Start	-
						LOOP sequence	Start	
						Remote Manual	Start	
Essential service water pump discharge valves	EWS-MOV-503 A, B, C, D	3	Yes	Yes	Yes/No	ESW pump start	Transfer Open	As Is
						ESW pump stop	Transfer Closed	
Component Cooling Water Heat Exchanger Essential Service Water Flow	EWS-FT-034, 035, 036, 037	-	Yes	-	Yes/ No	-	-	-
Essential Service Water Header Pressure	EWS-PT-015, 016, 017, 018	-	Yes	-	Yes/ No	-	-	-
Essential Service Water Pump Discharge Check Valves	EWS-VLV-502A, 502B, 502C, 502D	3	Yes	-	-/-	-	Transfer Open/ Transfer Closed	-
Essential service water pump discharge strainers	EWS-SST-001A, B, C, D EWS-SST-002A, B, C, D	3	Yes	-	Yes/No	ESW pump stop	Stop	-
						Remote Manual	Start/Stop	

NOTE:
Dash (-) indicates not applicable

Table 2.7.3.1-2 Essential Service Water System Equipment Characteristics (Sheet 2 of 2)

Equipment Name	Tag No.	ASME Code Section III Class	Seismic Category I	Remotely Operated Valve	Class 1E/ Qual. For Harsh Envir.	PSMS Control	Active Safety Function	Loss of Motive Power Position
Essential service water pump discharge strainer backwash line isolation valves	EWS-MOV-573A, B, C, D EWS-MOV-574A, B, C, D	3	Yes	Yes	Yes/No	ESW pump stop	Transfer Closed	As Is
						Remote Manual	Transfer Open/ Transfer Closed	

NOTE:
Dash (-) indicates not applicable

Table 2.7.3.1-3 Essential Service Water System Piping Characteristics

Pipe Line Name	ASME Code Section III Class	Seismic Category I
Essential service water supply header piping and valves	3	Yes
Essential service water return header piping and valves	3	Yes
Essential service water pump discharge strainer backwash lines	3	Yes
Essential service water supply line piping and valves to component cooling water heat exchangers	3	Yes
Essential service water return line piping and valves from component cooling water heat exchangers	3	Yes
Essential service water supply line piping and valves to essential chiller units	3	Yes
Essential service water return line piping and valves from essential chiller units	3	Yes

Table 2.7.3.1-4 Essential Service Water System Equipment Alarms, Displays, and Control Functions

Equipment/Instrument Name	MCR/RSC Alarm	MCR Display	MCR/RSC Control Function	RSC Display
Essential service water pumps EWS-MPP-001A, B, C, D	No	Yes	Yes	Yes
Essential service water pump discharge valves EWS-MOV-503A, B, C, D	No	Yes	Yes	Yes
Essential service water header pressure EWS-PT-015, 016, 017, 018	Yes	Yes	No	Yes
Component cooling water heat exchanger essential service water flow EWS-FT-034, 035, 036, 037	Yes	Yes	No	Yes
Essential service water pump discharge strainers EWS-SST-001A, B, C, D EWS-SST-002A, B, C, D	Yes	Yes	Yes	Yes
Essential service water pump discharge strainer backwash line isolation valves EWS-MOV-573A, B, C, D EWS-MOV-574A, B, C, D	Yes	Yes	Yes	Yes

Table 2.7.3.1-5 Essential Service Water System Inspections, Tests, Analyses, and Acceptance Criteria (Sheet 1 of 7)

Design Commitment	Inspections, Tests, Analyses	Acceptance Criteria
1.a The functional arrangement of the ESWS is as described in the Design Description of Subsection 2.7.3.1.1 and in Table 2.7.3.1-1 and as shown in Figure 2.7.3.1-1.	1.a Inspection of the as-built ESWS will be performed.	1.a The as-built ESWS conforms to the functional arrangement as described in the Design Description of Subsection 2.7.3.1.1 and in Table 2.7.3.1-1 and as shown in Figure 2.7.3.1-1.
1.b Each mechanical division of the ESWS (Division A, B, C & D) except for piping is physically separated from the other divisions so as not to preclude accomplishment of the safety function.	1.b Inspection and analysis of the as-built ESWS will be performed.	1.b Each mechanical division of the as-built ESWS (Division A, B, C & D) except for piping is physically separated from the other divisions of the system by spatial separation, barriers or enclosures so as to assure that the functions of the safety related system is maintained.
2.a.i The ASME Code Section III components of the ESWS, identified in Table 2.7.3.1-2, are fabricated, installed, and inspected in accordance with ASME Code Section III requirements.	2.a.i Inspection of the as-built ASME Code Section III components of the ESWS identified in Table 2.7.3.1-2 will be performed.	2.a.i The ASME Code Section III data report(s) (certified, when required by ASME Code) and inspection reports (including N-5 Data Reports where applicable) exist and conclude that the as-built ASME Code Section III components of the ESWS identified in Table 2.7.3.1-2 are fabricated, installed, and inspected in accordance with ASME Code Section III requirements.
2.a.ii The ASME Code Section III components of the ESWS identified in Table 2.7.3.1-2 are reconciled with the design requirements.	2.a.ii A reconciliation analysis of the components identified in Table 2.7.3.1-2 using as-designed and as-built information and ASME Code Section III design report(s) (NCA-3550) will be performed.	2.a.ii The ASME Code Section III design report(s) (certified, when required by ASME Code) exist and conclude that design reconciliation has been completed in accordance with the ASME code for the as-built ASME Code Section III components of the ESWS identified in Table 2.7.3.1-2 . The report documents the results of the reconciliation analysis.

Table 2.7.3.1-5 Essential Service Water System Inspections, Tests, Analyses, and Acceptance Criteria (Sheet 2 of 7)

Design Commitment	Inspections, Tests, Analyses	Acceptance Criteria
2.b.i The ASME Code Section III piping of the ESWS, including supports, identified in Table 2.7.3.1-3, is fabricated, installed, and inspected in accordance with ASME Code Section III requirements.	2.b.i Inspection of the as-built ASME Code Section III piping of the ESWS, including supports, identified in Table 2.7.3.1-3, will be performed.	2.b.i The ASME Code Section III data report(s) (certified, when required by ASME Code) and inspection reports (including N-5 Data Reports where applicable) exist and conclude that the as-built ASME Code Section III piping of the ESWS, including supports, identified in Table 2.7.3.1-3 is fabricated, installed, and inspected in accordance with ASME Code Section III requirements.
2.b.ii The ASME Code Section III piping of the ESWS, including supports, identified in Table 2.7.3.1-3 is reconciled with the design requirements.	2.b.ii A reconciliation analysis of the piping of the ESWS, including supports, identified in Table 2.7.3.1-3, using as-designed and as-built information and ASME Code Section III design report(s) (NCA-3550) will be performed.	2.b.ii The ASME Code Section III design report(s) (certified, when required by ASME Code) exist and conclude that the design reconciliation has been completed in accordance with the ASME Code, for the as-built ASME Code Section III piping of the ESWS, including supports, identified in Table 2.7.3.1-3. The report documents the results of the reconciliation analysis.
3.a Pressure boundary welds in ASME Code Section III components, identified in Table 2.7.3.1-2, meet ASME Code Section III requirements for non-destructive examination of welds.	3.a Inspections of the as-built pressure boundary welds in ASME Code Section III components identified in Table 2.7.3.1-2 will be performed in accordance with the ASME Code Section III.	3.a The ASME Code Section III code reports exist and conclude that the ASME Code Section III requirements are met for non-destructive examination of the as-built pressure boundary welds in ASME Code Section III components identified in Table 2.7.3.1-2.

Table 2.7.3.1-5 Essential Service Water System Inspections, Tests, Analyses, and Acceptance Criteria (Sheet 3 of 7)

Design Commitment	Inspections, Tests, Analyses	Acceptance Criteria
3.b Pressure boundary welds in ASME Code Section III piping, identified in Table 2.7.3.1-3, meet ASME Code Section III requirements for non-destructive examination of welds.	3.b Inspections of the as-built pressure boundary welds in ASME Code Section III piping identified in Table 2.7.3.1-3 will be performed in accordance with the ASME Code Section III.	3.b The ASME Code Section III code reports exist and conclude that the ASME Code Section III requirements are met for non-destructive examination of the as-built pressure boundary welds in ASME Code Section III piping identified in Table 2.7.3.1-3.
4.a The ASME Code Section III components, identified in Table 2.7.3.1-2, retain their pressure boundary integrity at their design pressure.	4.a A hydrostatic test will be performed on the as-built components identified in Table 2.7.3.1-2 required by the ASME Code Section III to be hydrostatically tested.	4.a ASME Code Data Report(s) exist and conclude that the results of the hydrostatic test of the as-built components identified in Table 2.7.3.1-2 as ASME Code Section III conform to the requirements of the ASME Code Section III.
4.b The ASME Code Section III piping, identified in Table 2.7.3.1-3, retains its pressure boundary integrity at its design pressure.	4.b A hydrostatic test will be performed on the as-built piping, identified in Table 2.7.3.1-3, required by the ASME Code Section III to be hydrostatically tested.	4.b ASME Code Data Report(s) exist and conclude that the results of the hydrostatic test of the as-built piping identified in Table2.7.3.1-3 as ASME Code Section III conform to the requirements of the ASME Code Section III.
5.a The seismic Category I equipment identified in Table 2.7.3.1-2 can withstand seismic design basis loads without loss of safety function.	5.a.i Inspections will be performed to verify that the as-built seismic Category I equipment identified in Table 2.7.3.1-2 is located in a seismic Category I structure.	5.a.i The as-built seismic Category I equipment identified in Table 2.7.3.1-2 is located in a seismic Category I structure.
	5.a.ii Type tests, analyses, or a combination of type tests and analyses of seismic Category I equipment identified in Table 2.7.3.1-2 will be performed using analytical assumptions, or will be performed under conditions, which bound the seismic design basis requirements.	5.a.ii A report exists and concludes that the seismic Category I equipment identified in Table 2.7.3.1-2 can withstand seismic design basis loads without loss of safety function.

Table 2.7.3.1-5 Essential Service Water System Inspections, Tests, Analyses, and Acceptance Criteria (Sheet 4 of 7)

Design Commitment	Inspections, Tests, Analyses	Acceptance Criteria
	5.a.iii Inspections and analyses will be performed to verify that the as-built seismic Category I equipment identified in Table 2.7.3.1-2, including anchorages, is seismically bounded by the tested or analyzed conditions.	5.a.iii A report exists and concludes that the as-built seismic Category I equipment identified in Table 2.7.3.1-2, including anchorages, is seismically bounded by the tested or analyzed conditions.
5.b The seismic Category I piping, including supports, identified in Table 2.7.3.1-3 can withstand seismic design basis loads without a loss of its safety function.	5.b.i Inspections will be performed to verify that the as-built seismic Category I piping, including supports, identified in Table 2.7.3.1-3 are supported by a seismic Category I structure(s).	5.b.i The as-built seismic Category I piping, including supports, identified in Table 2.7.3.1-3 is supported by a seismic Category I structure(s).
	5.b.ii Inspections and analyses will be performed to verify that the as-built seismic Category I piping, including supports, identified in Table 2.7.3.1-3 can withstand seismic design basis loads without a loss of its safety function.	5.b.ii A report exists and concludes that the as-built seismic Category I piping, including supports, identified in Table 2.7.3.1-3 can withstand seismic design basis loads without a loss of its safety function.
6.a Class 1E equipment identified in Table 2.7.3.1-2 is powered from its respective Class 1E division.	6.a A test will be performed on each division of the as-built Class 1E equipment identified in Table 2.7.3.1-2 by providing a simulated test signal only in the Class 1E division under test.	6.a The simulated test signal exists at the as-built Class 1E equipment identified in Table 2.7.3.1-2 under test.
6.b Separation is provided between redundant divisions of ESWS Class 1E cables, and between Class 1E cables and non-Class 1E cables.	6.b Inspections of the as-built Class 1E divisional cables will be performed.	6.b Physical separation or electrical isolation is provided, in accordance with RG 1.75, between the as-built cables of redundant ESWS Class 1E divisions and between Class 1E cables and non-Class 1E cables.
7. The ESWS provides cooling	7.i Deleted.	7.i Deleted.

Table 2.7.3.1-5 Essential Service Water System Inspections, Tests, Analyses, and Acceptance Criteria (Sheet 5 of 7)

Design Commitment	Inspections, Tests, Analyses	Acceptance Criteria
water required for the CCW heat exchangers and the essential chiller units of the essential chilled water system (ECWS) during all plant operating conditions, including normal plant operating, abnormal and accident conditions.	7.ii Tests will be performed to confirm that the as-built ESW pumps can provide flow to the CCW heat exchangers and the essential chiller units of the ECWS.	7.ii The as-built ESW pumps identified in Table 2.7.3.1-2 delivers at least 11,000 gpm of essential service water to the CCW heat exchangers and at least 543 gpm to the essential chiller units in the same division.
8. Controls are provided in the MCR to open and close the remotely operated valves identified in Table 2.7.3.1-2.	8. Tests will be performed on the as-built remotely operated valves identified in Table 2.7.3.1-2 using controls in the as-built MCR.	8. Controls in the as-built MCR open and close the as-built remotely operated valves identified in Table 2.7.3.1-2.
9.a The remotely operated valves and check valves, identified in Table 2.7.3.1-2 as having an active safety function, perform an active safety function to change position as indicated in the table.	9.a.i Type tests or a combination of type tests and analyses of the remotely operated valves identified in Table 2.7.3.1-2 as having an active safety function will be performed that demonstrate the capability of the valve to operate under its design conditions.	9.a.i A report exists and concludes that each remotely operated valve identified in Table 2.7.3.1-2 as having an active safety function changes position as identified in Table 2.7.3.1-2 under design conditions.
	9.a.ii Tests of the as-built remotely operated valves identified in Table 2.7.3.1-2 as having an active safety function will be performed under preoperational flow, differential pressure, and temperature conditions.	9.a.ii Each as-built remotely operated valve identified in Table 2.7.3.1-2 as having an active safety function changes position as indicated in Table 2.7.3.1-2 under preoperational test conditions.
	9.a.iii Inspections will be performed of the as-built remotely operated valves identified in Table 2.7.3.1-2.	9.a.iii Each as-built remotely operated valve identified in Table 2.7.3.1-2 as having an active safety function is bounded by the type tests, or a combination of type tests and analyses.
	9.a.iv Tests of the as-built check valves identified in Table 2.7.3.1-2 as having an active safety function will be performed under preoperational test pressure, temperature, and fluid flow conditions.	9.a.iv Each as-built check valve identified in Table 2.7.3.1-2 as having an active safety function changes position as indicated in Table 2.7.3.1-2 under preoperational test conditions.

Table 2.7.3.1-5 Essential Service Water System Inspections, Tests, Analyses, and Acceptance Criteria (Sheet 6 of 7)

Design Commitment	Inspections, Tests, Analyses	Acceptance Criteria
9.b Upon the receipt of a signal that ESWP has started, the essential service water discharge valve opens automatically. Each pump's discharge valve is interlocked to close when the pump is not running or is tripped.	9.b A test of each interlock for the as-built essential service water discharge valve will be performed using a simulated test signal.	9.b The ESWP discharge valve closes when its respective pump is not running. Upon the receipt of a simulated signal that ESWP has started, the as-built discharge valve for the respective pump opens automatically. The valve closes when the pump is tripped.
9.c After loss of motive power, the remotely operated valves, identified in Table 2.7.3.1-2, assume the indicated loss of motive power position.	9.c Tests of the as-built remotely operated valves identified in Table 2.7.3.1-2 will be performed under the conditions of loss of motive power.	9.c Upon loss of motive power, each as-built remotely operated valve identified in Table 2.7.3.1-2 assumes the indicated loss of motive power position.
10.a Controls are provided in the MCR to start and stop the essential service water pumps identified in Table 2.7.3.1-4.	10.a Tests will be performed on the as-built essential service water pumps identified in Table 2.7.3.1-4 using controls in the as-built MCR.	10.a Controls are provided in the as-built MCR to start and stop the as-built essential service water pumps identified in Table 2.7.3.1-4.
10.b The pumps identified in Table 2.7.3.1-2 as having PSMS control perform an active safety function after receiving a signal from PSMS.	10.b Tests will be performed on the as-built pumps identified in Table 2.7.3.1-2 using simulated signals.	10.b The as-built pumps identified in Table 2.7.3.1-2 as having PSMS control perform the active safety function identified in the table after receiving a simulated signal.
11. Alarms and displays identified in Table 2.7.3.1-4 are provided in the MCR.	11. Inspection will be performed for retrievability of the alarms and displays identified in Table 2.7.3.1-4 in the as-built MCR.	11. Alarms and displays identified in Table 2.7.3.1-4 can be retrieved in the as-built MCR.
12. Alarms, displays, and controls identified in Table 2.7.3.1-4 are provided in the RSC.	12.i Inspection will be performed for the retrievability of the alarms and displays identified in Table 2.7.3.1-4 in the as-built RSC.	12.i Alarms and displays identified in Table 2.7.3.1-4 can be retrieved in the as-built RSC.
	12.ii Tests of the as-built RSC control functions identified in Table 2.7.3.1-4 will be performed.	12.ii Controls in the as-built RSC operate the as-built equipment identified in Table 2.7.3.1-4 with an RSC control function.

Table 2.7.3.1-5 Essential Service Water System Inspections, Tests, Analyses, and Acceptance Criteria (Sheet 7 of 7)

Design Commitment	Inspections, Tests, Analyses	Acceptance Criteria
13.a Controls are provided in the MCR to place in service or remove from service the strainers identified in Table 2.7.3.1-4.	13.a Tests will be performed on the as-built strainers identified in Table 2.7.3.1-4 using controls in the as-built MCR.	13.a Controls are provided in the as-built MCR to place in service or remove from service the as-built strainers identified in Table 2.7.3.1-4.
13.b The strainers identified in Table 2.7.3.1-2 as having PSMS control perform an active safety function after receiving a signal from PSMS.	13.b Tests will be performed on the as-built strainers identified in Table 2.7.3.1-2 as having PSMS control using simulated signals.	13.b The as-built strainers identified in Table 2.7.3.1-2 as having PSMS control perform the active safety function identified in the table after receiving a simulated signal.
14 The ESWP discharge strainer backwash isolation valves identified in Table 2.7.3.1-2 as having PSMS control perform an active safety function after receiving a signal from PSMS.	14 A test will be performed on the as-built ESWP discharge strainer backwash isolation valves identified in Table 2.7.3.1-2 as having PSMS control using simulated signals.	14 The as-built ESWP discharge strainer backwash isolation valves identified in Table 2.7.3.1-2 as having PSMS control perform the active safety function identified in the table after receiving a simulated signal.

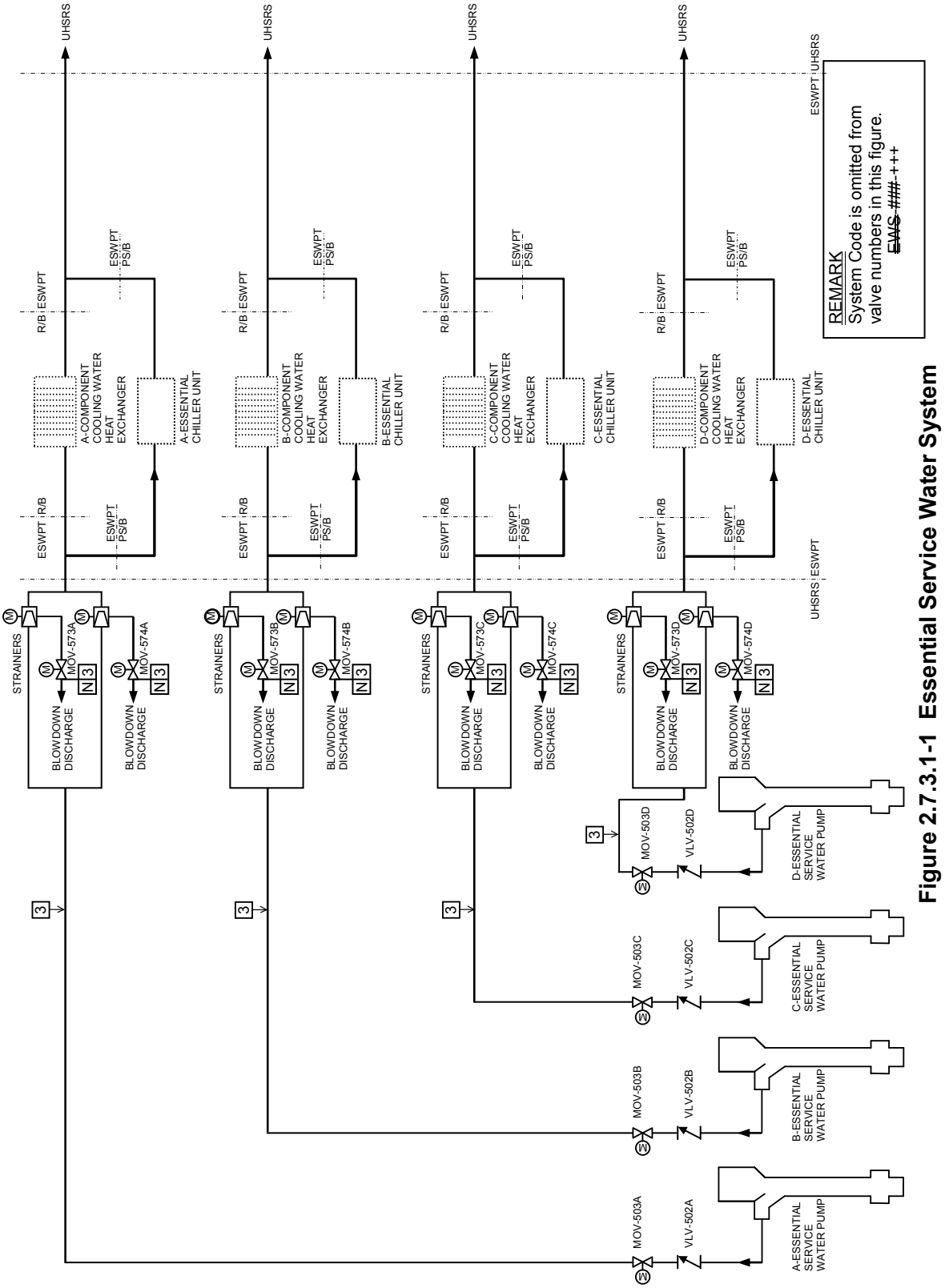

Figure 2.7.3.1-1 Essential Service Water System

2.7.3.2 Non- Essential Service Water System (Non-ESWS)

This system does not require ITAAC.

2.7.3.3 Component Cooling Water System (CCWS)

2.7.3.3.1 Design Description

The component cooling water system (CCWS) is a safety-related system that provides cooling water to various components including non safety-related components. The CCWS is the intermediate cooling system that transfers heat from the cooled components to the essential service water system.

The CCWS provides for containment isolation, as described in Section 2.11.2, of the CCWS lines penetrating the containment.

The CCWS consists of four divisions (Division A, B, C & D). Each division has one component cooling water (CCW) pump and one component cooling water heat exchanger and provides 50% of the cooling capacity required for its safety function. Each division provides cooling water for a safety injection pump, a core spray/residual heat removal (CS/RHR) pump and other safety-related components shown in Figure 2.7.3.3-1. Header tie lines between Division A and B, and between Division C and D are provided. A common line for supply header A1 and supply header A2 branches out from the tie line between Division A and B. Similarly, a common line for the supply header C1 and the supply header C2 branches out from the tie line between Division C and D. The supply headers A1 and C1 provide cooling water for charging pumps, SFP heat exchangers and other safety-related components shown in Figure 2.7.3.3-1. The supply headers A2 and C2 provide cooling water for the instrument air system and other non safety-related components shown in Figure 2.7.3.3-1. The CCWS line is connected to the non-essential chilled water system to provide alternate cooling water to the containment fan cooler units through the non-essential chilled water system.

1.a The functional arrangement of the CCWS is as described in the Design Description of Subsection 2.7.3.3 and in Table 2.7.3.3-1 and as shown in Figure 2.7.3.3-1.

1.b Each mechanical division of the CCWS (Divisions A, B, C & D) with the exception of that portion of the system consisting of the supply headers A2 & C2, is physically separated from the other divisions so as not to preclude accomplishment of the safety function.

2.a.i The ASME Code Section III components of the CCWS, identified in Table 2.7.3.3-2, are fabricated, installed, and inspected in accordance with ASME Code Section III requirements.

2.a.ii The ASME Code Section III components of the CCWS identified in Table 2.7.3.3-2 are reconciled with the design requirements.

2.b.i The ASME Code Section III piping of the CCWS, including supports, identified in Table 2.7.3.3-3, is fabricated, installed, and inspected in accordance with ASME Code Section III requirements.

2.b.ii The ASME Code Section III piping of the CCWS, including supports, identified in Table 2.7.3.3-3, is reconciled with the design requirements.

3.a Pressure boundary welds in ASME Code Section III components, identified in Table 2.7.3.3-2, meet ASME Code Section III requirements for non-destructive examination of welds.

3.b Pressure boundary welds in ASME Code Section III piping, identified in Table 2.7.3.3-3, meet ASME Code Section III requirements for non-destructive examination of welds.

4.a The ASME Code Section III components, identified in Table 2.7.3.3-2, retain their pressure boundary integrity at their design pressure.

4.b The ASME Code Section III piping, identified in Table 2.7.3.3-3, retains its pressure boundary integrity at its design pressure.

5.a The seismic Category I equipment identified in Table 2.7.3.3-2 can withstand seismic design basis loads without loss of safety function.

5.b The seismic Category I piping, including supports, identified in Table 2.7.3.3-3 can withstand seismic design basis loads without a loss of its safety function.

6.a The Class 1E equipment identified in Table 2.7.3.3-2 as being qualified for a harsh environment can withstand the environmental conditions that would exist before, during, and following a design basis accident without loss of safety function for the time required to perform the safety function.

6.b Class 1E equipment identified in Table 2.7.3.3-2 is powered from its respective Class 1E division.

6.c Separation is provided between redundant divisions of CCWS Class 1E cables, and between Class 1E cables and non-Class 1E cables.

7. The CCWS removes heat from various components during all plant operating conditions, including normal plant operating, abnormal and accident conditions.

8.a Controls are provided in the MCR to open and close the remotely operated valves identified in Table 2.7.3.3-2.

8.b The valves identified in Table 2.7.3.3-2 as having PSMS control perform an active safety function after receiving a signal from PSMS.

9.a The remotely operated valves and check valves, identified in Table 2.7.3.3-2, perform an active safety function to change position as indicated in the table.

9.b After loss of motive power, the remotely operated valves, identified in Table 2.7.3.3-2, assume the indicated loss of motive power position.

10.a Controls are provided in the MCR to start and stop the CCW pumps identified in Table 2.7.3.3-4.

10.b The pumps identified in Table 2.7.3.3-2 as having PSMS control perform an active safety function after receiving a signal from PSMS.

11. Alarms and displays identified in Table 2.7.3.3-4 are provided in the MCR.

12. Alarms, displays and controls identified in Table 2.7.3.3-4 are provided in the RSC.

13. The CCW pumps have sufficient net positive suction head (NPSH).

2.7.3.3.2 Inspections, Tests, Analysis, and Acceptance Criteria

Table 2.7.3.3-5 describes the ITAAC for the CCWS.

The ITAAC associated with the CCWS equipment, components, and piping that comprise a portion of the CIS are described in Table 2.11.2-2.

Table 2.7.3.3-1 Component Cooling Water System Location of Equipment and Piping (Sheet 1 of 2)

System and Components	Location
Component cooling water heat exchangers	Reactor Building
Component cooling water pumps	Reactor Building
Component cooling water surge tank	Reactor Building
Component cooling water supply, return lines piping and valves excluding the following; Component cooling water system containment isolation valves and piping between the valves Component cooling water supply, return lines piping and valves between and excluding the valves NCS-VLV-033A and 034A	Reactor Building
Component cooling water supply, return lines piping and valves excluding the following; Component cooling water system containment isolation valves and piping between the valves Component cooling water supply, return lines piping and valves between and excluding the valves NCS-VLV-033B and 034B	Reactor Building
Component cooling water supply, return lines piping and valves between and excluding the valves NCS-VLV-033A and 034A, excluding the following; Component cooling water system containment isolation valves and piping between the valves Component cooling water system piping and valves between and including the valve NCS-AOV-661A and NCS-VLV-671A Component cooling water system piping and valves between and including the valve NCS-AOV-601 and NCS-VLV-653	Reactor Building
Component cooling water supply, return lines piping and valves between and excluding the valves NCS-VLV-033B and 034B, excluding the following; Component cooling water system containment isolation valves and piping between the valves Component cooling water system piping and valves between and including the valve NCS-AOV-661B and NCS-VLV-671B	Reactor Building
Component cooling water system piping and valves related to the excess letdown heat exchanger inside containment between and including the valves NCS-MOV-511,517, SRV-513	Containment Reactor Building
Component cooling water system piping and valves related to the letdown heat exchanger inside containment between and including the valves NCS-MOV-531,537, SRV-533	Containment Reactor Building
Component cooling water system piping and valves between and including the containment isolation valves NCS-MOV-402A,436A,438A,445A,447A,448A and NCS-VLV-403A,437A	Containment Reactor Building

Table 2.7.3.3-1 Component Cooling Water System Location of Equipment and Piping (Sheet 2 of 2)

System and Components	Location
Component cooling water piping and valves between and including the containment isolation valves NCS-MOV-402B,436B,438B,445B,447B,448B and NCS-VLV-403B,437B	Containment Reactor Building
Component cooling water system piping and valves related to components installed in A/B from and excluding isolation valve NCS-AOV-602 up to and excluding stop valve NCS-VLV-651	Auxiliary Building Reactor Building
Component cooling water system piping and valves related to components installed in T/B from and excluding isolation valves NCS-AOV-662A,B up to and excluding stop valves NCS-VLV-669A,B	Turbine Building Reactor Building
Component cooling water system piping and valves related to reactor coolant pumps between the containment isolation valves NCS-MOV-436A,447A (excluding) and NCS-VLV-403A,437A (excluding) and the valves NCS-SRV-406A,B,435A (including)	Containment
Component cooling water system piping and valves related to reactor coolant pumps between the containment isolation valves NCS-MOV-436B,447B (excluding) and NCS-VLV-403B,437B (excluding) and the valves NCS-SRV-406C,D,435B (including)	Containment
Component cooling water system piping and valves between and including the valves NCS-AOV-601 and 602	Reactor Building
Component cooling water system piping and valves between and including the valves NCS-VLV-651 and 653	Reactor Building
Component cooling water system piping and valves between and including the valves NCS-AOV-661A,B and 662A,B	Reactor Building
Component cooling water system piping and valves between and including the valves NCS-VLV-669A,B and 671A,B	Reactor Building
Component cooling water surge tank surge line piping	Reactor Building

Table 2.7.3.3-2 Component Cooling Water System Equipment Characteristics (Sheet 1 of 8)

Equipment Name	Tag No.	ASME Code Section III Class	Seismic Category I	Remotely Operated Valve	Class 1E/ Qual. For Harsh Envir.	PSMS Control	Active Safety Function	Loss of Motive Power Position
Component cooling water (CCW) heat exchangers	NCS-MHX-001 A, B, C, D	3	Yes	-	-/-	-	-	-
Component cooling water pumps	NCS-MPP-001 A, B, C, D	3	Yes	-	Yes/No	ECCS Actuation	Start	-
						LOOP sequence	Start	
						Low CCW header pressure	Start	
Component cooling water surge tanks	NCS-MTK-001 A, B	3	Yes	-	-/-	-	-	-
Component cooling water pump discharge check valves	NCS-VLV-016 A, B, C, D	3	Yes	-	-/-	-	Transfer Open	-
CCW supply header tie line isolation valves	NCS-MOV-020 A, B, C, D	3	Yes	Yes	Yes/No	ECCS Actuation and undervoltage signal	Transfer Closed	As Is
						Containment Spray	Transfer Closed	
						Low-low CCW surge tank water level	Transfer Closed	
						Remote Manual	Transfer Open/ Transfer Closed	

Table 2.7.3.3-2 Component Cooling Water System Equipment Characteristics (Sheet 2 of 8)

Equipment Name	Tag No.	ASME Code Section III Class	Seismic Category I	Remotely Operated Valve	Class 1E/ Qual. For Harsh Envir	PSMS Control	Active Safety Function	Loss of Motive Power Position
CCW return header tie line isolation valves	NCS-MOV-007 A, B, C, D	3	Yes	Yes	Yes/No	ECCS Actuation and undervoltage signal	Transfer Closed	As Is
						Containment Spray	Transfer Closed	
						Low-low CCW surge tank water level	Transfer Closed	
						Remote Manual	Transfer Open/ Transfer Closed	
CS/RHR heat exchanger CCW outlet valves	NCS-MOV-145 A, B, C, D	3	Yes	Yes	Yes/No	ECCS Actuation and CCW pump start	Transfer Open	As Is
						Remote Manual	Transfer Open/ Transfer Closed	
RCP CCW supply line outside containment isolation valves	NCS-MOV-402 A, B	2	Yes	Yes	Yes/No	Containment Isolation Phase B	Transfer Closed	As Is
						Remote Manual	Transfer Open/ Transfer Closed	

Table 2.7.3.3-2 Component Cooling Water System Equipment Characteristics (Sheet 3 of 8)

Equipment Name	Tag No.	ASME Code Section III Class	Seismic Category I	Remotely Operated Valve	Class 1E/ Qual. For Harsh Envir.	PSMS Control	Active Safety Function	Loss of Motive Power Position
RCP CCW supply line inside containment check valves	NCS-VLV-403 A, B	2	Yes	-	-/-	-	Transfer Open/ Transfer Closed	-
Reactor coolant pump thermal barrier heat exchanger component cooling water supply check valves	NCS-VLV-405 A, B, C, D	3	Yes	-	-/-	-	Transfer Open/ Transfer Closed	-
RCP CCW supply line outside containment isolation valve bypass valves	NCS-MOV-445 A, B	2	Yes	Yes	Yes/No	Remote Manual	Transfer Open/ Transfer Closed	As Is
RCP CCW return line inside containment isolation valves	NCS-MOV-436 A, B	2	Yes	Yes	Yes/Yes	Containment Isolation Phase B	Transfer Closed	As Is
						Remote Manual	Transfer Open/ Transfer Closed	
RCP CCW return line inside containment check valves	NCS-VLV-437 A, B	2	Yes	-	-/-	-	Transfer Closed	-
Reactor coolant pump component cooling water return line check valves	NCS-VLV-439 A, B	3	Yes	-	-/-	-	Transfer Open/ Transfer Closed	-
RCP CCW return line inside containment isolation valve bypass valves	NCS-MOV-447 A, B	2	Yes	Yes	Yes/Yes	Remote Manual	Transfer Open/ Transfer Closed	As Is

Table 2.7.3.3-2 Component Cooling Water System Equipment Characteristics (Sheet 4 of 8)

Equipment Name	Tag No.	ASME Code Section III Class	Seismic Category I	Remotely Operated Valve	Class 1E/ Qual. For Harsh Envir.	PSMS Control	Active Safety Function	Loss of Motive Power Position
RCP CCW return line outside containment isolation valves	NCS-MOV-438 A, B	2	Yes	Yes	Yes/No	Containment Isolation Phase B	Transfer Closed	As Is
						Remote Manual	Transfer Open/ Transfer Closed	
RCP CCW return line outside containment isolation valve bypass valves	NCS-MOV-448 A, B	2	Yes	Yes	Yes/No	Remote Manual	Transfer Open/ Transfer Closed	As Is
RCP motor CCW supply line isolation valves	NCS-MOV-446 A, B,C,D	3	Yes	Yes	Yes/Yes	Remote Manual	Transfer Closed	As Is
RCP CCW supply line tie line isolation valves	NCS-MOV-232 A, B	3	Yes	Yes	Yes/No	Remote Manual	Transfer Open	As Is
RCP CCW return line tie line isolation valves	NCS-MOV-233 A, B	3	Yes	Yes	Yes/No	Remote Manual	Transfer Open	As Is
RCP CCW return line isolation valve	NCS-MOV-234 A, B	3	Yes	Yes	Yes/No	Remote Manual	Transfer Closed	As Is
RCP CCW supply line isolation valves	NCS-MOV-401 A, B	3	Yes	Yes	Yes/No	Containment Isolation Phase B	Transfer Closed	As Is
						Remote Manual	Transfer Open/ Transfer Closed	
Letdown heat exchanger CCW supply line outside containment isolation valve	NCS-MOV-531	2	Yes	Yes	Yes/No	Containment Isolation Phase A	Transfer Closed	As Is
Letdown heat exchanger CCW return line outside containment isolation valve	NCS-MOV-537	2	Yes	Yes	Yes/No	Containment Isolation Phase A	Transfer Closed	As Is

Table 2.7.3.3-2 Component Cooling Water System Equipment Characteristics (Sheet 5 of 8)

Equipment Name	Tag No.	ASME Code Section III Class	Seismic Category I	Remotely Operated Valve	Class 1E/ Qual. For Harsh Envir.	PSMS Control	Active Safety Function	Loss of Motive Power Position
Excess letdown heat exchanger CCW supply line outside containment isolation valve	NCS-MOV-511	2	Yes	Yes	Yes/No	Containment Isolation Phase A	Transfer Closed	As Is
Excess letdown heat exchanger CCW return line outside containment isolation valve	NCS-MOV-517	2	Yes	Yes	Yes/No	Containment Isolation Phase A	Transfer Closed	As Is
Auxiliary building CCW supply line first isolation valve	NCS-AOV-601	3	Yes	Yes	Yes/No	ECCS Actuation	Transfer Closed	Closed
						Containment Isolation Phase B	Transfer Closed	
						Low-low CCW surge tank water level	Transfer Closed	
Auxiliary building CCW supply line second isolation valve	NCS-AOV-602	3	Yes	Yes	Yes/No	ECCS Actuation	Transfer Closed	Closed
						Containment Isolation Phase B	Transfer Closed	
						Low-low CCW surge tank water level	Transfer Closed	
Auxiliary building component cooling water return header check valve	NCS-VLV-652	3	Yes	-	-/-	-	Transfer Closed	-
Auxiliary building component cooling water return header check valve	NCS-VLV-653	3	Yes	-	-/-	-	Transfer Closed	-

Table 2.7.3.3-2 Component Cooling Water System Equipment Characteristics (Sheet 6 of 8)

Equipment Name	Tag No.	ASME Code Section III Class	Seismic Category I	Remotely Operated Valve	Class 1E/ Qual. For Harsh Envir.	PSMS Control	Active Safety Function	Loss of Motive Power Position
Turbine building CCW supply line first isolation valves	NCS-AOV-661 A, B	3	Yes	Yes	Yes/No	ECCS Actuation and undervoltage	Transfer Closed	Closed
						Containment Isolation Phase B	Transfer Closed	
						Low-low CCW surge tank water level	Transfer Closed	
Turbine building CCW supply line second isolation valves	NCS-AOV-662 A, B	3	Yes	Yes	Yes/No	ECCS Actuation and undervoltage	Transfer Closed	Closed
						Containment Isolation Phase B	Transfer Closed	
						Low-low CCW surge tank water level	Transfer Closed	
Turbine building component cooling water return header check valve	NCS-VLV-670A, B	3	Yes	-	-/-	-	Transfer Closed	-
Turbine building component cooling water return header check valve	NCS-VLV-671A, B	3	Yes	-	-/-	-	Transfer Closed	-

Table 2.7.3.3-2 Component Cooling Water System Equipment Characteristics (Sheet 7 of 8)

Equipment Name	Tag No.	ASME Code Section III Class	Seismic Category I	Remotely Operated Valve	Class 1E/ Qual. For Harsh Envir.	PSMS Control	Active Safety Function	Loss of Motive Power Position
RCP thermal barrier heat exchanger CCW return line first isolation valves	NCS-FCV-129 A 130 A 131 A 132 A	3	Yes	Yes	Yes / Yes	High RCP thermal barrier CCW flow 1	Transfer Closed	As Is
RCP thermal barrier heat exchanger CCW return line second isolation valves	NCS-FCV-129 B 130 B 131 B 132 B	3	Yes	Yes	Yes / Yes	High RCP thermal barrier CCW flow 2	Transfer Closed	As Is
RCP CCW supply line check valves	NCS-VLV-231 A, B	3	Yes	-	-/-	-	Transfer Open/ Transfer Closed	-
Charging pump CCW supply line check valves	NCS-VLV-306 A, B	3	Yes	-	-/-	-	Transfer Open	-
Charging pump CCW return isolation valve	NCS-MOV-316 A, B	3	Yes	Yes	Yes/No	-	-	As Is
Charging pump fire fighting water supply isolation valve	NCS-MOV-321 A, B	3	Yes	Yes	Yes/No	-	-	As Is
Charging pump alternative cooling water supply isolation valve	NCS-MOV-322 A, B	3	Yes	Yes	Yes/No	-	-	As Is
Charging pump non-essential chilled water supply isolation valve	NCS-MOV-323 A, B	3	Yes	Yes	Yes/No	-	-	As Is
Charging pump alternative cooling water return isolation valve	NCS-MOV-324A, B	3	Yes	Yes	Yes/No	-	-	As Is
Charging pump fire fighting water return isolation valve	NCS-MOV-325 A, B	3	Yes	Yes	Yes/No	-	-	As Is

Table 2.7.3.3-2 Component Cooling Water System Equipment Characteristics (Sheet 8 of 8)

Equipment Name	Tag No.	ASME Code Section III Class	Seismic Category I	Remotely Operated Valve	Class 1E/ Qual. For Harsh Envir.	PSMS Control	Active Safety Function	Loss of Motive Power Position
Charging pump non-essential chilled water return isolation valve	NCS-MOV-326 A, B	3	Yes	Yes	Yes/No	-	-	As Is
Component cooling water Header Flow	NCS-FT-034, 035, 037, 038	-	Yes	-	Yes/ No	-	-	-
Component cooling water Surge Tank Water Level	NCS-LT-010, 011, 020, 021	-	Yes	-	Yes/ No	-	-	-
Component cooling water Header Pressure	NCS-PT-030, 031, 032, 033	-	Yes	-	Yes/ No	-	-	-
Component cooling water Supply Temperature	NCS-TE-025, 026, 027, 028,	-	Yes	-	Yes/ No	-	-	-
RCP thermal barrier component cooling water flow 1	NCS-FT-129 A 130 A 131 A 132 A	-	Yes	-	Yes/No	-	-	-
RCP thermal barrier component cooling water flow 2	NCS-FT-129 B 130 B 131 B 132 B	-	Yes	-	Yes/No	-	-	-

NOTE: Dash (-) indicates not applicable.

Table 2.7.3.3-3 Component Cooling Water System Piping Characteristics (Sheet 1 of 2)

Pipe Line Name	ASME Code Section III Class	Seismic Category I
Component cooling water supply, return lines piping and valves excluding the following; Component cooling water system containment isolation valves and piping between the valves Component cooling water supply, return lines piping and valves between and excluding the valves NCS-VLV-033A and 034A	3	Yes
Component cooling water supply, return lines piping and valves excluding the following; Component cooling water system containment isolation valves and piping between the valves Component cooling water supply, return lines piping and valves between and excluding the valves NCS-VLV-033B and 034B	3	Yes
Component cooling water supply, return lines piping and valves between and excluding the valves NCS-VLV-033A and 034A, excluding the following; Component cooling water system containment isolation valves and piping between the valves Component cooling water system piping and valves between and including the valve NCS-AOV-661A and NCS-VLV-671A Component cooling water system piping and valves between and including the valve NCS-AOV-601 and NCS-VLV-653	-	No
Component cooling water supply, return lines piping and valves between and excluding the valves NCS-VLV-033B and 034B, excluding the following; Component cooling water system containment isolation valves and piping between the valves Component cooling water system piping and valves between and including the valve NCS-AOV-661B and NCS-VLV-671B	-	No
Component cooling water system piping and valves related to the excess letdown heat exchanger inside containment between and including the valves NCS-MOV-511,517, SRV-513	2	Yes
Component cooling water system piping and valves related to the letdown heat exchanger inside containment between and including the valves NCS-MOV-531,537, SRV-533	2	Yes
Component cooling water system piping and valves between and including the containment isolation valves NCS-MOV-402A,436A,438A,445A,447A,448A and NCS-VLV-403A,437A	2	Yes

Table 2.7.3.3-3 Component Cooling Water System Piping Characteristics (Sheet 2 of 2)

Pipe Line Name	ASME Code Section III Class	Seismic Category I
Component cooling water piping and valves between and including the containment isolation valves NCS-MOV-402B,436B,438B,445B,447B,448B and NCS-VLV-403B,437B	2	Yes
Component cooling water system piping and valves related to components installed in A/B from and excluding isolation valve NCS-AOV-602 up to and excluding stop valve NCS-VLV-651	-	No
Component cooling water system piping and valves related to components installed in T/B from and excluding isolation valves NCS-AOV-662A,B up to and excluding stop valves NCS-VLV-669A,B	-	No
Component cooling water system piping and valves related to reactor coolant pumps between the containment isolation valves NCS-MOV-436A,447A (excluding) and NCS-VLV-403A,437A (excluding) and the valves NCS-SRV-406A,B,435A (including)	3	Yes
Component cooling water system piping and valves related to reactor coolant pumps between the containment isolation valves NCS-MOV-436B,447B (excluding) and NCS-VLV-403B,437B (excluding) and the valves NCS-SRV-406C,D,435B (including)	3	Yes
Component cooling water system piping and valves between and including the valves NCS-AOV-601 and 602	3	Yes
Component cooling water system piping and valves between and including the valves NCS-VLV-651 and 653	3	Yes
Component cooling water system piping and valves between and including the valves NCS-AOV-661A,B and 662A,B	3	Yes
Component cooling water system piping and valves between and including the valves NCS-VLV-669A,B and 671A,B	3	Yes
Component cooling water surge tank surge line piping	3	Yes

NOTE:
Dash (-) indicates not applicable

Table 2.7.3.3-4 Component Cooling Water System Equipment Alarms, Displays, and Control Functions (Sheet 1 of 2)

Equipment/Instrument Name	MCR/RSC Alarm	MCR Display	MCR/RSC Control Function	RSC Display
Component cooling water pumps (NCS-MPP-001 A,B,C,D)	No	Yes	Yes	Yes
CCW supply header tie line isolation valves (NCS-MOV-020A,B)	No	Yes	Yes	Yes
CCW return header tie line isolation valves (NCS-MOV-007A,B)	No	Yes	Yes	Yes
CS/RHR heat exchanger CCW outlet valves (NCS-MOV-145A,B,C,D)	No	Yes	Yes	Yes
RCP CCW supply line outside containment isolation valves (NCS-MOV-402A,B)	No	Yes	Yes	Yes
RCP CCW supply line outside containment isolation valve bypass valves (NCS-MOV-445A,B)	No	Yes	Yes	Yes
RCP CCW return line inside containment isolation valves (NCS-MOV-436A,B)	No	Yes	Yes	Yes
RCP CCW return line inside containment isolation valve bypass valves (NCS-MOV-447A,B)	No	Yes	Yes	Yes
RCP CCW return line outside containment isolation valves (NCS-MOV-438A,B)	No	Yes	Yes	Yes
RCP CCW return line outside containment isolation valve bypass valves (NCS-MOV-448A,B)	No	Yes	Yes	Yes
RCP motor CCW supply line isolation valves (NCS-MOV-446A,B,C,D)	No	Yes	Yes	Yes
RCP CCW supply line tie line isolation valves (NCS-MOV-232A,B)	No	Yes	Yes	Yes
RCP CCW return line tie line isolation valves (NCS-MOV-233A,B)	No	Yes	Yes	Yes
RCP CCW return line isolation valve (NCS-MOV-234A,B)	No	Yes	Yes	Yes
RCP CCW supply line isolation valves (NCS-MOV-401A,B)	No	Yes	Yes	Yes
Charging pump CCW return isolation valve (NCS-MOV-316A,B)	No	Yes	Yes	Yes
Charging pump fire fighting water supply isolation valve (NCS-MOV-321A, B)	No	Yes	Yes	Yes
Charging pump alternative cooling water supply isolation valve (NCS-MOV-322A,B)	No	Yes	Yes	Yes
Charging pump non-essential chilled water supply isolation valve (NCS-MOV-323A,B)	No	Yes	Yes	Yes
Charging pump alternative cooling water return isolation valve (NCS-MOV-324A,B)	No	Yes	Yes	Yes

Table 2.7.3.3-4 Component Cooling Water System Equipment Alarms, Displays, and Control Functions (Sheet 2 of 2)

Equipment/Instrument Name	MCR/RSC Alarm	MCR Display	MCR/RSC Control Function	RSC Display
Charging pump fire fighting water return isolation valve (NCS-MOV-325A,B)	No	Yes	Yes	Yes
Charging pump non-essential chilled water return isolation valve (NCS-MOV-326A,B)	No	Yes	Yes	Yes
Letdown heat exchanger CCW supply line outside containment isolation valve (NCS-MOV-531)	No	Yes	Yes	Yes
Letdown heat exchanger CCW return line outside containment isolation valve (NCS-MOV-537)	No	Yes	Yes	Yes
Excess letdown heat exchanger CCW supply line outside containment isolation valve ((NCS-MOV-511)	No	Yes	Yes	Yes
Excess letdown heat exchanger CCW return line outside containment isolation valve (NCS-MOV-517)	No	Yes	Yes	Yes
Auxiliary building CCW supply line first isolation valve (NCS-AOV-601)	No	Yes	Yes	Yes
Auxiliary building CCW supply line second isolation valve (NCS-AOV-602)	No	Yes	Yes	Yes
Turbine building CCW supply line first isolation valves (NCS-AOV-661A,B)	No	Yes	Yes	Yes
Turbine building CCW supply line second isolation valves (NCS-AOV-662A,B)	No	Yes	Yes	Yes
RCP thermal barrier heat exchanger CCW return line first isolation valves (NCS-FCV-129A,130A,131A,132A)	No	Yes	Yes	Yes
RCP thermal barrier heat exchanger CCW return line second isolation valves (NCS-FCV-129B,130B,131B,132B)	No	Yes	Yes	Yes
CCW header flow (NCS-FT-034,035,037,038)	No	Yes	No	Yes
CCW supply temperature (NCS-TE-025,026,027,028)	Yes	Yes	No	Yes
CCW header pressure (NCS-PT-030,031,032,033)	Yes	Yes	No	Yes
CCW surge tank water level (NCS-LT-010,011,020,021)	Yes	Yes	No	Yes
RCP thermal barrier component cooling water flow (NCS-FT-129A,B, 130A,B, 131A,B, 132A,B)	Yes	Yes	No	Yes

Table 2.7.3.3-5 Component Cooling Water System Inspections, Tests, Analyses, and Acceptance Criteria (Sheet 1 of 8)

Design Commitment	Inspections, Tests, Analyses	Acceptance Criteria
1.a The functional arrangement of the CCWS is as described in the Design Description of Subsection 2.7.3.3 and in Table 2.7.3.3-1 and as shown in Figure 2.7.3.3-1.	1.a An inspection of the as-built CCWS will be performed.	1.a The as-built CCWS conforms to the functional arrangement as described in the Design Description of Subsection 2.7.3.3 and in Table 2.7.3.3-1 and as shown in Figure 2.7.3.3-1.
1.b Each mechanical division of the CCWS (Divisions A, B, C & D with the exception of that portion of the system consisting of the supply headers A2 & C2, is physically separated from the other divisions so as not to preclude accomplishment of the safety function.	1.b Inspections and analysis of the as-built CCWS will be performed.	1.b A report exists and concludes that each mechanical division of the as-built CCWS (Divisions A, B, C & D), with the exception of that portion of the system consisting of the supply headers A2 & C2, is physically separated from other mechanical divisions of the system by spatial separation, barriers, or enclosures so as to assure that the functions of the safety-related system is maintained.
2.a.i The ASME Code Section III components of the CCWS, identified in Table 2.7.3.3-2, are fabricated, installed, and inspected in accordance with ASME Code Section III requirements.	2.a.i Inspection of the as-built ASME Code Section III components of the CCWS, identified in Table 2.7.3.3-2, will be performed.	2.a.i The ASME Code Section III data report(s) (certified, when required by ASME Code) and inspection reports (including N-5 Data Reports where applicable) exist and conclude that the as-built ASME Code Section III components of the CCWS identified in Table 2.7.3.3-2 are fabricated, installed, and inspected in accordance with ASME Code Section III requirements.

Table 2.7.3.3-5 Component Cooling Water System Inspections, Tests, Analyses, and Acceptance Criteria (Sheet 2 of 8)

Design Commitment	Inspections, Tests, Analyses	Acceptance Criteria
2.a.ii The ASME Code Section III components of the CCWS identified in Table 2.7.3.3-2 are reconciled with the design requirements.	2.a.ii A reconciliation analysis of the components identified in Table 2.7.3.3-2 using as-designed and as-built information and ASME Code Section III design report(s) (NCA-3550) will be performed.	2.a.ii The ASME Code Section III design report(s) (certified, when required by ASME Code) exist and conclude that the design reconciliation has been completed in accordance with the ASME Code, for the as-built ASME Code Section III components of the CCWS identified in Table 2.7.3.3-2 . The report documents the results of the reconciliation analysis.
2.b.i The ASME Code Section III piping of the CCWS, including supports, identified in Table 2.7.3.3-3, is fabricated, installed, and inspected in accordance with ASME Code Section III requirements.	2.b.i Inspection of the as-built ASME Code Section III piping of the CCWS, including supports, identified in Table 2.7.3.3-3 will be performed.	2.b.i The ASME Code Section III data report(s) (certified, when required by ASME Code) and inspection reports (including N-5 Data Reports where applicable) exist and conclude that the as-built ASME Code Section III piping of the CCWS, including supports, identified in Table 2.7.3.3-3 is fabricated, installed, and inspected in accordance with ASME Code Section III requirements.
2.b.ii The ASME Code Section III piping of the CCWS, including supports, identified in Table 2.7.3.3-3, is reconciled with the design requirements.	2.b.ii A reconciliation analysis of the piping of the CCWS, including supports, identified in Table 2.7.3.3-3, using as-designed and as-built information and ASME Code Section III design report(s) (NCA-3550) will be performed.	2.b.ii The ASME Code Section III design report(s) (certified, when required by ASME Code) exist and conclude that design reconciliation has been completed in accordance with the ASME Code, for the as-built ASME Code Section III piping of the CCWS, including supports, identified in Table 2.7.3.3-3 . The report documents the results of the reconciliation analysis.

Table 2.7.3.3-5 Component Cooling Water System Inspections, Tests, Analyses, and Acceptance Criteria (Sheet 3 of 8)

Design Commitment		Inspections, Tests, Analyses		Acceptance Criteria	
3.a	Pressure boundary welds in ASME Code Section III components, identified in Table 2.7.3.3-2, meet ASME Code Section III requirements for non-destructive examination of welds.	3.a	Inspections of the as-built pressure boundary welds in ASME Code Section III components identified in Table 2.7.3.3-2, will be performed in accordance with the ASME Code Section III.	3.a	The ASME Code Section III code reports exist and conclude that the ASME Code Section III requirements are met for non-destructive examination of the as-built pressure boundary welds in ASME Code Section III components identified in Table 2.7.3.3-2.
3.b	Pressure boundary welds in ASME Code Section III piping, identified in Table 2.7.3.3-3, meet ASME Code Section III requirements for non-destructive examination of welds.	3.b	Inspections of the as-built pressure boundary welds in ASME Code Section III piping identified in Table 2.7.3.3-3 will be performed in accordance with the ASME Code Section III.	3.b	The ASME Code Section III code reports exist and conclude that the ASME Code Section III requirements are met for non-destructive examination of the as-built pressure boundary welds in ASME Code Section III piping identified in Table 2.7.3.3-3.
4.a	The ASME Code Section III components, identified in Table 2.7.3.3-2, retain their pressure boundary integrity at their design pressure.	4.a	A hydrostatic test will be performed on the as-built components, identified in Table 2.7.3.3-2, required by the ASME Code Section III to be hydrostatically tested.	4.a	ASME Code Data Report(s) exist and conclude that the results of the hydrostatic test of the as-built components identified in Table 2.7.3.3-2 as ASME Code Section III conform to the requirements of the ASME Code Section III.
4.b	The ASME Code Section III piping, identified in Table 2.7.3.3-3, retains its pressure boundary integrity at its design pressure.	4.b	A hydrostatic test will be performed on the as-built piping, identified in Table 2.7.3.3-3, required by the ASME Code Section III to be hydrostatically tested.	4.b	ASME Code Data Report(s) exist and conclude that the results of the hydrostatic test of the as-built piping identified in Table 2.7.3.3-3 as ASME Code Section III conform to the requirements of the ASME Code Section III.
5.a	The seismic Category I equipment identified in Table 2.7.3.3-2 can withstand seismic design basis loads without loss of safety function.	5.a.i	Inspections will be performed to verify that the as-built seismic Category I equipment identified in Table 2.7.3.3-2 is located in a seismic Category I structure.	5.a.i	The seismic Category I as-built equipment identified in Table 2.7.3.3-2 is located in a seismic Category I structure.

Table 2.7.3.3-5 Component Cooling Water System Inspections, Tests, Analyses, and Acceptance Criteria (Sheet 4 of 8)

Design Commitment	Inspections, Tests, Analyses	Acceptance Criteria
	5.a.ii Type tests, analyses, or a combination of type tests and analyses of seismic Category I equipment identified in Table 2.7.3.3-2 will be performed using analytical assumptions, or will be performed, under conditions which bound the seismic design basis requirements.	5.a.ii A report exists and concludes that the seismic Category I equipment identified in Table 2.7.3.3-2 can withstand seismic design basis loads without loss of safety function.
	5.a.iii Inspections and analyses will be performed to verify that the as-built seismic Category I equipment identified in Table 2.7.3.3-2, including anchorages, is seismically bounded by the tested or analyzed conditions.	5.a.iii A report exists and concludes that the as-built seismic Category I equipment identified in Table 2.7.3.3-2, including anchorages, are seismically bounded by the tested or analyzed conditions.
5.b The seismic Category I piping, including supports, identified in Table 2.7.3.3-3 can withstand seismic design basis loads without a loss of its safety function.	5.b.i Inspections will be performed to verify that the as-built seismic Category I piping, including supports, identified in Table 2.7.3.3-3 is supported by a seismic Category I structure(s).	5.b.i The as-built seismic Category I piping, including supports, identified in Table 2.7.3.3-3 is supported by a seismic Category I structure(s).
	5.b.ii Inspections and analyses will be performed to verify that the as-built seismic Category I piping, including supports, identified in Table 2.7.3.3-3 can withstand seismic design basis loads without a loss of its safety function.	5.b.ii A report exists and concludes that each of the as-built seismic Category I piping, including supports, identified in Table 2.7.3.3-3 can withstand seismic design basis loads without a loss of its safety function.
6.a The Class 1E equipment identified in Table 2.7.3.3-2 as being qualified for a harsh environment can withstand the environmental conditions that would exist before, during, and following a design basis accident without loss of safety function for the time required to perform the safety function.	6.a.i Type tests or a combination of type tests and analyses using the design environmental conditions, or under the conditions which bound the design environmental conditions, will be performed on Class 1E equipment identified in Table 2.7.3.3-2 as being qualified for a harsh environment.	6.a.i A report exists and concludes that the Class 1E equipment identified in Table 2.7.3.3-2 as being qualified for a harsh environment can withstand the environmental conditions that would exist before, during, and following a design basis accident without loss of safety function for the time required to perform the safety function.

Table 2.7.3.3-5 Component Cooling Water System Inspections, Tests, Analyses, and Acceptance Criteria (Sheet 5 of 8)

Design Commitment	Inspections, Tests, Analyses	Acceptance Criteria
	6.a.ii Inspection will be performed of the as-built Class 1E equipment identified in Table 2.7.3.3-2 as being qualified for a harsh environment and the associated wiring, cables, and terminations located in a harsh environment.	6.a.ii The as-built Class 1E equipment and the associated wiring, cables, and terminations identified in Table 2.7.3.3-2 as being qualified for a harsh environment are bounded by type tests or a combination of type tests and analyses.
6.b Class 1E equipment, identified in Table 2.7.3.3-2, is powered from its respective Class 1E division.	6.b A test will be performed on each division of the as-built Class 1E equipment identified in Table 2.7.3.3-2 by providing a simulated test signal only in the Class 1E division under test.	6.b The simulated test signal exists at the as-built Class 1E equipment identified in Table 2.7.3.3-2 under test.
6.c Separation is provided between redundant divisions of CCWS Class 1E cables, and between Class 1E cables and non-Class 1E cables.	6.c Inspections of the as-built Class 1E divisional cables will be performed.	6.c Physical separation or electrical isolation is provided in accordance with RG 1.75, between the as-built cables of redundant Class 1E divisions and between Class 1E cables and non-Class 1E cables.
7. The CCWS removes heat from various components during all plant operating conditions, including normal plant operating, abnormal and accident conditions.	7.i An analysis will be performed that determines the heat removal capability of the CCW heat exchangers.	7.i A report exists and concludes that the product of the overall heat transfer coefficient and the effective heat exchange area, UA, of each CCW heat exchanger identified in Table 2.7.3.3-2 is greater than or equal to 10.0×10^6 Btu/hr-°F.
	7.ii Tests will be performed to confirm that the as-built CCW pumps can provide flow to the CCW heat exchangers.	7.ii Each as-built CCW pump identified in Table 2.7.3.3-2 is capable of achieving its design flow rate of 11,000 gpm to each CCW heat exchanger in the same division.
	7.iii Inspections will be performed to confirm the as-built CCW surge tank volume.	7.iii The as-built CCW surge tank volume is greater than or equal to the design volume of 283 ft^3.

Table 2.7.3.3-5 Component Cooling Water System Inspections, Tests, Analyses, and Acceptance Criteria (Sheet 6 of 8)

Design Commitment	Inspections, Tests, Analyses	Acceptance Criteria
8.a Controls are provided in the MCR to open and close the remotely operated valves identified in Table 2.7.3.3-2.	8.a Tests will be performed on the as-built remotely operated valves identified in Table 2.7.3.3-2 using controls in the as-built MCR.	8.a Controls in the as-built MCR open and close the as-built remotely operated valves identified in Table 2.7.3.3-2.
8.b The valves identified in Table 2.7.3.3-2 as having PSMS control perform an active safety function after receiving a signal from PSMS.	8.b Test will be performed on the as-built remotely operated valves identified in Table 2.7.3.3-2 using simulated signals.	8.b The as-built remotely operated valves identified in Table 2.7.3.3-2 as having PSMS control perform the active safety function identified in the table after receiving a simulated signal.
9.a The remotely operated valves and check valves, identified in Table 2.7.3.3-2, perform an active safety function to change position as indicated in the table.	9.a.i Type tests or a combination of type tests and analyses of the remotely operated valves identified in Table 2.7.3.3-2 will be performed that demonstrate the capability of the valve to operate under its design conditions.	9.a.i A report exists and concludes that each remotely operated valve changes position as identified in Table 2.7.3.3-2 under design conditions.
	9.a.ii Tests of the as-built remotely operated valves identified in Table 2.7.3.3-2 will be performed under preoperational flow, differential pressure, and temperature conditions.	9.a.ii Each as-built remotely operated valve changes position as indicated in Table 2.7.3.3-2 under preoperational test conditions.
	9.a.iii Inspections will be performed of the as-built remotely operated valves identified in Table 2.7.3.3-2.	9.a.iii Each as-built remotely operated valve identified in Table 2.7.3.3-2 is bounded by the type tests, or a combination of type tests and analyses.
	9.a.iv Tests of the as-built check valves identified in Table 2.7.3.3-2 will be performed under preoperational test pressure, temperature, and fluid flow conditions.	9.a.iv Each as-built check valve changes position as indicated in Table 2.7.3.3-2 under preoperational test conditions.
9.b After loss of motive power, the remotely operated valves, identified in Table 2.7.3.3-2, assume the indicated loss of motive power position.	9.b Tests of the as-built valves identified in Table 2.7.3.3-2 will be performed under the conditions of loss of motive power.	9.b Upon loss of motive power, each as-built remotely operated valve identified in Table 2.7.3.3-2 assumes the indicated loss of motive power position.

Table 2.7.3.3-5 Component Cooling Water System Inspections, Tests, Analyses, and Acceptance Criteria (Sheet 7 of 8)

Design Commitment	Inspections, Tests, Analyses	Acceptance Criteria
10.a Controls are provided in the MCR to start and stop the CCW pumps identified in Table 2.7.3.3-4.	10.a Tests will be performed on the as-built CCW pumps identified in Table 2.7.3.3-4 using controls in the as-built MCR.	10.a Controls in the as-built MCR start and stop the as-built CCW pumps identified in Table 2.7.3.3-4.
10.b The pumps identified in Table 2.7.3.3-2 as having PSMS control perform an active safety function after receiving a signal from PSMS.	10.b Test will be performed on the as-built pumps identified in Table 2.7.3.3-2 using simulated signals.	10.b The as-built pumps identified in Table 2.7.3.3-2 as having PSMS control perform the active safety function identified in the table after receiving a simulated signal.
11. Alarms and displays identified in Table 2.7.3.3-4 are provided in the MCR.	11. Inspection will be performed for retrievability of the alarms and displays identified in Table 2.7.3.3-4 in the as-built MCR.	11. Alarms and displays identified in Table 2.7.3.3-4 can be retrieved in the as-built MCR.
12. Alarms, displays and controls identified in Table 2.7.3.3-4 are provided in the RSC.	12.i Inspection will be performed for retrievability of the alarms and displays identified in Table 2.7.3.3-4 in the as-built RSC.	12.i Alarms and displays identified in Table 2.7.3.3-4 can be retrieved in the as-built RSC.
	12.ii Tests of the as-built RSC control functions identified in Table 2.7.3.3-4 will be performed.	12.ii Controls in the as-built RSC operate the as-built equipment identified in Table 2.7.3.3-4 with an RSC control function.

Table 2.7.3.3-5 Component Cooling Water System Inspections, Tests, Analyses, and Acceptance Criteria (Sheet 8 of 8)

Design Commitment	Inspections, Tests, Analyses	Acceptance Criteria
13. The CCW pumps have sufficient net positive suction head (NPSH).	13. Tests to measure the as-built CCW pump suction pressure will be performed. Inspections and analyses to determine NPSH available to each pump will be performed. The analysis will consider vendor test results of required NPSH and the effects of: – pressure losses for pump inlet piping and components, – suction from the CCW surge tank with operating pressure and water level at their minimum values.	13. A report exists and concludes that the NPSH available exceeds the required NPSH.

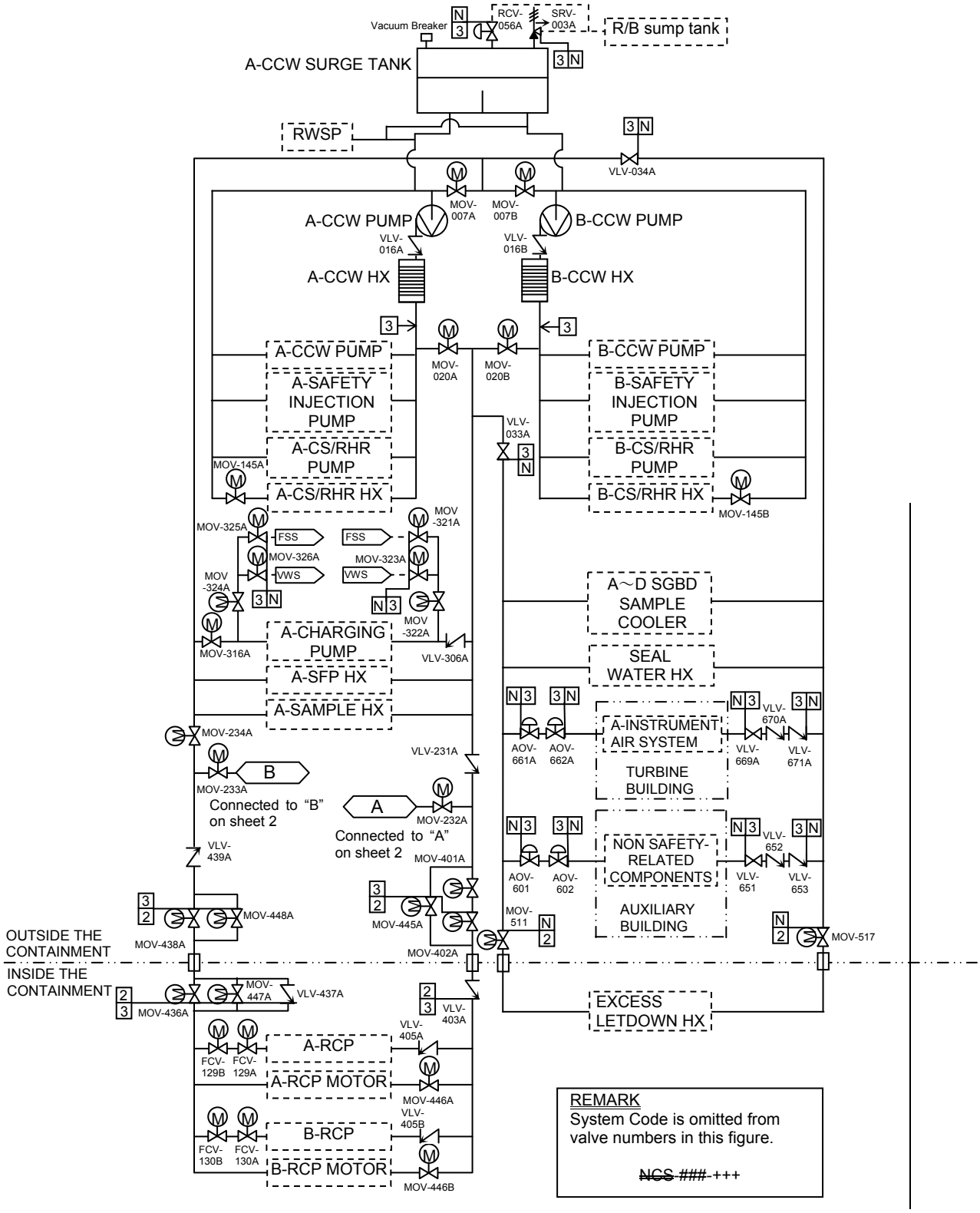

Figure 2.7.3.3-1 Component Cooling Water System (Sheet 1 of 2)

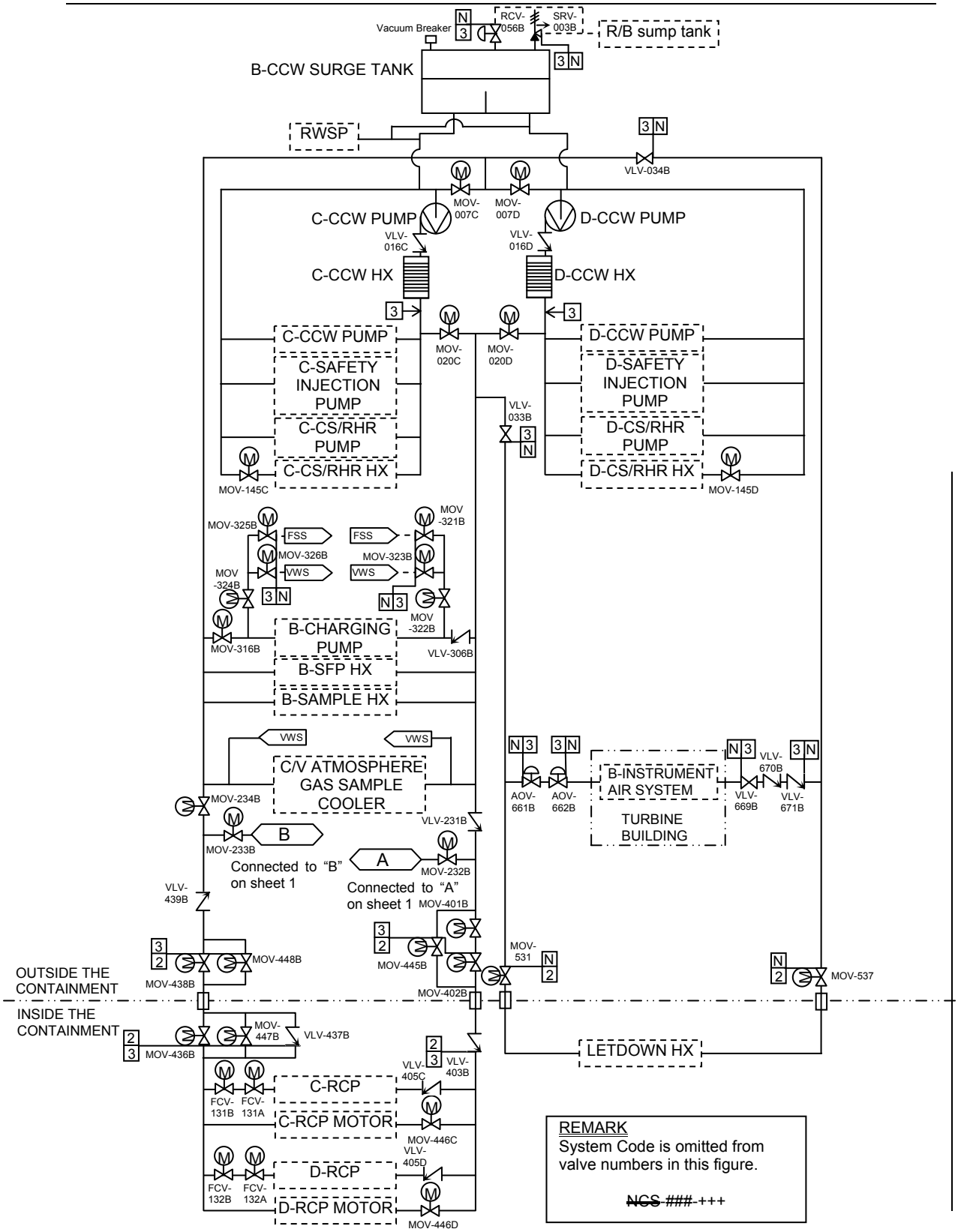

Figure 2.7.3.3-1 Component Cooling Water System (Sheet 2 of 2)

2.7.3.4 Turbine Component Cooling Water System

This system does not require ITAAC.

2.7.3.5 Essential Chilled Water System (ECWS)

2.7.3.5.1 Design Description

The ECWS is a safety-related system that provides chilled water for the safety-related HVAC systems during all plant conditions, including normal plant operations, abnormal and accident conditions.

These HVAC systems include:

- Main Control Room HVAC system
- Class 1E electrical room HVAC system
- Safeguard component area HVAC system
- Emergency feedwater pump area HVAC system
- Safety-related component area HVAC system

The ECWS consists of four independent divisions (Division A, B, C & D) with each division providing fifty percent (50%) of cooling capacity required for design basis accidents and for safe shutdown. Each division includes one essential chiller unit, one essential chilled water (ECW) pump and one ECW compression tank.

1.a The functional arrangement of the ECWS is as described in the Design Description of Subsection 2.7.3.5.1 and in Table 2.7.3.5-1, and as shown in Figure 2.7.3.5-1.

1.b Each mechanical division of the ECWS (Divisions A, B, C & D) is physically separated from the other divisions so as not to preclude accomplishment of the safety function.

2.a.i The ASME Code Section III components of the ECWS, identified in Table 2.7.3.5-2, are fabricated, installed, and inspected in accordance with ASME Code Section III requirements.

2.a.ii The ASME Code Section III components of the ECWS identified in Table 2.7.3.5-2 are reconciled with the design requirements.

2.b.i The ASME Code Section III piping of the ECWS, including supports, identified in Table 2.7.3.5-3, is fabricated, installed, and inspected in accordance with ASME Code Section III requirements.

2.b.ii The ASME Code Section III piping of the ECWS, including supports, identified in Table 2.7.3.5-3 is reconciled with the design requirements.

3.a Pressure boundary welds in ASME Code Section III components, identified in Table 2.7.3.5-2, meet ASME Code Section III requirements for non-destructive examination of welds.

3.b Pressure boundary welds in ASME Code Section III piping, identified in Table 2.7.3.5-3, meet ASME Code Section III requirements for non-destructive examination of welds.

4.a The ASME Code Section III components, identified in Table 2.7.3.5-2, retain their pressure boundary integrity at their design pressure.

4.b The ASME Code Section III piping, identified in Table 2.7.3.5-3, retains its pressure boundary integrity at its design pressure.

5.a The seismic Category I equipment, identified in Table 2.7.3.5-2, can withstand seismic design basis loads without loss of safety function.

5.b The seismic Category I piping, including supports, identified in Table 2.7.3.5-3, can withstand seismic design basis loads without a loss of its safety function.

6.a Class 1E equipment, identified in Table 2.7.3.5-2, is powered from its respective Class 1E division.

6.b Separation is provided between redundant divisions of ECWS Class 1E cables, and between Class 1E cables and non-Class 1E cables.

7. The ECWS removes heat from various cooling coils during all plant operating conditions, including normal plant operating, abnormal and accident conditions.

8. The remotely operated valves identified in Table 2.7.3.5-2 as having PSMS control perform an active safety function after receiving a signal from PSMS.

9.a The remotely operated valves and check valves, identified in Table 2.7.3.5-2 as having an active safety function, perform an active safety function to change position as indicated in the table.

9.b After loss of motive power, the remotely operated valves, identified in Table 2.7.3.5-2, assume the indicated loss of motive power position.

10.a Controls are provided in the MCR to start and stop the ECWS pumps and essential chiller units identified in Table 2.7.3.5-4.

10.b The ECW pumps and essential chiller units identified in Table 2.7.3.5-2 as having PSMS control perform an active safety function after receiving a signal from PSMS.

11. Displays identified in Table 2.7.3.5-4 are provided in the MCR.

12. Displays and controls identified in Table 2.7.3.5-4 are provided in the RSC.

13. The ECW pumps have sufficient net positive suction head (NPSH).

14. The ECW compression tank volume accommodates system thermal expansion and contraction, and 7-day system operation without make-up.

2.7.3.5.2 Inspections, Tests, Analyses, and Acceptance Criteria

Table 2.7.3.5-5 describes the ITAAC for the ECWS.

Table 2.7.3.5-1 Essential Chilled Water System Location of Equipment and Piping

System and Components	Location
Essential Chiller Unit	Power Source Building
Essential Chilled Water Pump	Power Source Building
Essential Chilled Water Compression Tank	Power Source Building
Essential chilled water distribution loop	Reactor Building Power Source Building
Essential chilled water piping from compression tank to and including the valve (VWS-VLV-252A,B,C,D, VWS-VLV-258A,B,C,D, VWS-SRV-253A,B,C,D, and VWS-VLV-254A,B,C,D,)	Power Source Building
Essential chilled water compression tank surge line piping	Power Source Building
Essential chilled water piping from distribution loop to and including the valve (VWS-VLV-271A,B,C,D and VWS-VLV-274A,B,C,D)	Power Source Building

Table 2.7.3.5-2 Essential Chilled Water System Equipment Characteristics (Sheet 1 of 3)

Equipment Name	Tag No.	ASME Code Section III Class	Seismic Category I	Remotely Operated Valve	Class 1E/ Qual. For Harsh Envir.	PSMS Control	Active safety Function	Loss of Motive Power Position
Essential Chiller Units	VWS-MEQ-001 A, B, C, D	3	Yes	-	Yes/No	ECCS Actuation	Start	-
Essential Chilled Water Pumps	VWS-MPP-001 A, B, C, D	3	Yes	-	Yes/No	ECCS Actuation	Start	-
Essential Chilled Water Compression Tanks	VWS-MTK-001 A, B, C, D	3	Yes	-	-/-	-	None	-
Main Control Room Air Handling Unit Chilled Water Control Valves	VWS-TMV-141, 151, 161, 171	3	Yes	Yes	Yes/No	High Temperature	Transfer Open	As Is
Class 1E Electrical Room Air Handling Unit Chilled Water Control Valves	VWS-TMV-206, 226, 246, 266	3	Yes	Yes	Yes/No	High Temperature	Transfer Open	As Is
Safeguard Component Area Air Handling Unit Chilled Water Control Valves	VWS-TMV-304, 314, 324, 334	3	Yes	Yes	Yes/No	High Temperature	Transfer Open	As Is
Emergency Feedwater Pump Area Air Handling Unit Chilled Water Control Valves	VWS-TMV-402, 412, 422, 432	3	Yes	Yes	Yes/No	High Temperature	Transfer Open	As Is
Component Cooling Water Pump Area Air Handling Unit Chilled Water Control Valves	VWS-TMV-502, 512, 522, 532	3	Yes	Yes	Yes/No	High Temperature	Transfer Open	As Is

Table 2.7.3.5-2 Essential Chilled Water System Equipment Characteristics (Sheet 2 of 3)

Equipment Name	Tag No.	ASME Code Section III Class	Seismic Category I	Remotely Operated Valve	Class 1E/ Qual. For Harsh Envir.	PSMS Control	Active safety Function	Loss of Motive Power Position
Essential Chiller Unit Area Air Handling Unit Chilled Water Control Valves	VWS-TMV-542, 552, 562, 572	3	Yes	Yes	Yes/No	High Temperature	Transfer Open	As Is
Charging Pump Area Air Handling Unit Chilled Water Control Valves	VWS-TMV-582, 592	3	Yes	Yes	Yes/No	High Temperature	Transfer Open	As Is
Annulus Emergency Exhaust Filtration Unit Area Air Handling Unit Chilled Water Control Valves	VWS-TMV-602A, 602B, 612A, 612B	3	Yes	Yes	Yes/No	High Temperature	Transfer Open	As Is
Penetration Area Air Handling Unit Chilled Water Control Valves	VWS-TMV-622, 632, 642, 652	3	Yes	Yes	Yes/No	High Temperature	Transfer Open	As Is
Spent Fuel Pit Pump Area Air Handling Unit Chilled Water Control Valves	VWS-TMV-662A, 662B, 672A, 672B	3	Yes	Yes	Yes/No	High Temperature	Transfer Open	As is
Essential chilled water pump discharge check valves	VWS-VLV-005 A, B, C, D	3	Yes	-	-/-	-	Transfer Open	-
Compression tank relief valves	VWS-SRV-253 A, B, C, D	3	Yes	-	-/-	-	Transfer Open	-

Table 2.7.3.5-2 Essential Chilled Water System Equipment Characteristics (Sheet 3 of 3)

Equipment Name	Tag No.	ASME Code Section III Class	Seismic Category I	Remotely Operated Valve	Class 1E/ Qual. For Harsh Envir.	PSMS Control	Active safety Function	Loss of Motive Power Position
Nitrogen supply check valves	VWS-VLV-252 A, B, C, D	3	Yes	-	-/-	-	Transfer Closed	-
Makeup water supply check valves	VWS-VLV-258 A, B, C, D	3	Yes	-	-/-	-	Transfer Closed	-

NOTE:
Dash (-) indicates not applicable

Table 2.7.3.5-3 Essential Chilled Water System Piping Characteristics

Pipe Line Name	ASME Code Section III Class	Seismic Category I
Chilled Water Distribution Loop A	3	Yes
Chilled Water Distribution Loop B	3	Yes
Chilled Water Distribution Loop C	3	Yes
Chilled Water Distribution Loop D	3	Yes

Table 2.7.3.5-4 Essential Chilled Water System Equipment Alarms, Displays, and Control Functions (Sheet 1 of 2)

Equipment/Instrument Name	MCR/RSC Alarm	MCR Display	MCR/RSC Control Function	RSC Display
Essential Chiller Units (VWS-MEQ-001 A, B, C, D)	No	Yes	Yes	Yes
Essential Chilled Water Pumps (VWS-MPP-001 A, B, C, D)	No	Yes	Yes	Yes
Main Control Room Air Handling Unit Chilled Water Control Valves (VWS-TMV-141, 151, 161, 171)	No	Yes	No	Yes
Class 1E Electrical Room Air Handling Unit Chilled Water Control Valves (VWS-TMV-206, 226, 246, 266)	No	Yes	No	Yes
Safeguard Component Area Air Handling Unit Chilled Water Control Valves (VWS-TMV-304, 314, 324, 334)	No	Yes	No	Yes
Emergency Feedwater Pump Area Air Handling Unit Chilled Water Control Valves (VWS-TMV-402, 412, 422, 432)	No	Yes	No	Yes
Component Cooling Water Pump Area Air Handling Unit Chilled Water Control Valves (VWS-TMV-502, 512, 522, 532)	No	Yes	No	Yes
Essential Chiller Unit Area Air Handling Unit Chilled Water Control Valves (VWS-TMV-542, 552, 562, 572)	No	Yes	No	Yes
Charging Pump Area Air Handling Unit Chilled Water Control Valves (VWS-TMV-582, 592)	No	Yes	No	Yes
Annulus Emergency Exhaust Filtration Unit Area Air Handling Unit Chilled Water Control Valves (VWS-TMV-602A, 602B, 612A, 612B)	No	Yes	No	Yes

Table 2.7.3.5-4 Essential Chilled Water System Equipment Alarms, Displays and Control Functions (Sheet 2 of 2)

Equipment/Instrument Name	MCR/RSC Alarm	MCR Display	MCR/RSC Control Function	RSC Display
Penetration Area Air Handling Unit Chilled Water Control Valves (VWS-TMV-622, 632, 642, 652)	No	Yes	No	Yes
Spent Fuel Pit Pump Area Air Handling Unit Chilled Water Control Valves (VWS-TMV-662A, 662B, 672A, 672B)	No	Yes	No	Yes

Table 2.7.3.5-5 Essential Chilled Water System Inspections, Tests, Analyses, and Acceptance Criteria (Sheet 1 of 7)

Design Commitment	Inspections, Tests, Analyses	Acceptance Criteria
1.a The functional arrangement of the ECWS is as described in the Design Description of Subsection 2.7.3.5.1 and in Table 2.7.3.5-1, and as shown in Figure 2.7.3.5-1.	1.a Inspection of the as-built ECWS will be performed.	1.a The as-built ECWS conforms to the functional arrangement as described in the Design Description of Subsection 2.7.3.5.1 and in Table 2.7.3.5-1, and as shown in Figure 2.7.3.5-1.
1.b Each mechanical division of the ECWS (Divisions A, B, C & D) is physically separated from the other divisions so as not to preclude accomplishment of the safety function.	1.b Inspection and analysis of the as-built ECWS will be performed.	1.b A report exists and concludes that each mechanical division of the as-built ECWS (Divisions A, B, C & D) is physically separated from the other divisions of the system by spatial separation, barriers or enclosures so as to assure that the functions of the safety-related system is maintained.
2.a.i The ASME Code Section III components of the ECWS, identified in Table 2.7.3.5-2, are fabricated, installed, and inspected in accordance with ASME Code Section III requirements.	2.a.i An inspection of the as-built ASME Code Section III components of the ECWS identified in Table 2.7.3.5-2 will be performed.	2.a.i The ASME Code Section III data report(s) (certified, when required by ASME Code) and inspection reports (including N-5 Data Reports where applicable) exist and conclude that the as-built ASME Code Section III components of the ECWS identified in Table 2.7.3.5-2 are fabricated, installed, and inspected in accordance with ASME Code Section III requirements.
2.a.ii The ASME Code Section III components of the ECWS identified in Table 2.7.3.5-2 are reconciled with the design requirements.	2.a.ii A reconciliation analysis of the components identified in Table 2.7.3.5-2 using as-designed and as-built information and ASME Code Section III design report(s) (NCA-3550) will be performed.	2.a.ii The ASME Code Section III design report(s) (certified, when required by ASME Code) exist and conclude that the design reconciliation has been completed in accordance with the ASME Code, for the as-built ASME Code Section III components of the ECWS identified in Table 2.7.3.5-2. The report documents the results of the reconciliation analysis.

Table 2.7.3.5-5 Essential Chilled Water System Inspections, Tests, Analyses, and Acceptance Criteria (Sheet 2 of 7)

Design Commitment	Inspections, Tests, Analyses	Acceptance Criteria
2.b.i The ASME Code Section III piping of the ECWS, including supports, identified in Table 2.7.3.5-3, is fabricated, installed, and inspected in accordance with ASME Code Section III requirements.	2.b.i Inspection of the as-built ASME Code Section III piping of the ECWS, including supports, identified in Table 2.7.3.5-3, will be performed.	2.b.i The ASME Code Section III data report(s) (certified, when required by ASME Code) and inspection reports (including N-5 Data Reports where applicable) exist and conclude that the as-built ASME Code Section III piping of the ECWS, including supports, identified in Table 2.7.3.5-3 is fabricated, installed, and inspected in accordance with ASME Code Section III requirements.
2.b.ii The ASME Code Section III piping of the ECWS, including supports, identified in Table 2.7.3.5-3 is reconciled with the design requirements.	2.b.ii A reconciliation analysis of the piping of the ECWS, including supports, identified in Table 2.7.3.5-3, using as-designed and as-built information and ASME Code Section III design report(s) (NCA-3550) will be performed.	2.b.ii The ASME Code Section III design report(s) (certified, when required by ASME Code) exist and conclude that the design reconciliation has been completed in accordance with the ASME Code, for the as-built ASME Code Section III piping of the ECWS, including supports, identified in Table 2.7.3.5-3. The report documents the results of the reconciliation analysis.
3.a Pressure boundary welds in ASME Code Section III components, identified in Table 2.7.3.5-2, meet ASME Code Section III requirements for non-destructive examination of welds.	3.a Inspections of the as-built pressure boundary welds in ASME Code Section III components identified in Table 2.7.3.5-2 will be performed in accordance with the ASME Code Section III.	3.a The ASME Code Section III code reports exist and conclude that the ASME Code Section III requirements are met for non-destructive examination of the as-built pressure boundary welds in ASME Code Section III components identified in Table 2.7.3.5-2.

Table 2.7.3.5-5 Essential Chilled Water System Inspections, Tests, Analyses, and Acceptance Criteria (Sheet 3 of 7)

Design Commitment	Inspections, Tests, Analyses	Acceptance Criteria
3.b Pressure boundary welds in ASME Code Section III piping, identified in Table 2.7.3.5-3, meet ASME Code Section III requirements for non-destructive examination of welds.	3.b Inspections of the as-built pressure boundary welds in ASME Code Section III components identified in Table 2.7.3.5-3 will be performed in accordance with the ASME Code Section III.	3.b The ASME Code Section III code reports exist and conclude that the ASME Code Section III requirements are met for non-destructive examination of the as-built pressure boundary welds in ASME Code Section III components identified in Table 2.7.3.5-3.
4.a The ASME Code Section III components, identified in Table 2.7.3.5-2, retain their pressure boundary integrity at their design pressure.	4.a A hydrostatic test will be performed on the as-built components identified in Table 2.7.3.5-2 required by the ASME Code Section III to be hydrostatically tested.	4.a ASME Code Data Reports exist and conclude that the results of the hydrostatic test of the as-built components identified in Table 2.7.3.5-2 as ASME Code Section III conform to the requirements of the ASME Code Section III.
4.b The ASME Code Section III piping, identified in Table 2.7.3.5-3, retains its pressure boundary integrity at its design pressure.	4.b A hydrostatic test will be performed on the as-built piping identified in Table 2.7.3.5-3 required by the ASME Code Section III to be hydrostatically tested.	4.b ASME Code Data Reports exist and conclude that the results of the hydrostatic test of the as-built piping identified in Table 2.7.3.5-3 as ASME Code Section III conform to the requirements of the ASME Code Section III.
5.a The seismic Category I equipment, identified in Table 2.7.3.5-2, can withstand seismic design basis loads without loss of safety function.	5.a.i Inspections will be performed to verify that the as-built seismic Category I equipment identified in Table 2.7.3.5-2 is located in a seismic Category I structure.	5.a.i The as-built seismic Category I equipment identified in Table 2.7.3.5-2 is located in a seismic Category I structure.
	5.a.ii Type tests, analyses, or a combination of type tests and analyses of seismic Category I equipment identified in Table 2.7.3.5-2 will be performed using analytical assumptions, or will be performed under conditions, which bound the seismic design basis requirements.	5.a.ii A report exists and concludes that the seismic Category I equipment identified in Table 2.7.3.5-2 can withstand seismic design basis loads without loss of safety function.

Table 2.7.3.5-5 Essential Chilled Water System Inspections, Tests, Analyses, and Acceptance Criteria (Sheet 4 of 7)

Design Commitment	Inspections, Tests, Analyses	Acceptance Criteria
	5.a.iii Inspections and analyses will be performed to verify that the as-built seismic Category I equipment identified in Table 2.7.3.5-2, including anchorages, is seismically bounded by the tested or analyzed conditions.	5.a.iii A report exists and concludes that the as-built seismic Category I equipment identified in Table 2.7.3.5-2, including anchorages, is seismically bounded by the tested or analyzed conditions.
5.b The seismic Category I piping, including supports, identified in Table 2.7.3.5-3 can withstand seismic design basis loads without a loss of its safety function.	5.b.i Inspections will be performed to verify that the as-built seismic Category I piping, including supports, identified in Table 2.7.3.5-3 is supported by a seismic Category I structure(s).	5.b.i The as-built seismic Category I piping, including supports, identified in Table 2.7.3.5-3 is supported by a seismic Category I structure(s).
	5.b.ii Inspections and analyses will be performed to verify that the as-built seismic Category I piping, including supports, identified in Table 2.7.3.5-3 can withstand seismic design basis loads without a loss of its safety function.	5.b.ii A report exists and concludes that the as-built seismic Category I piping, including supports, identified in Table 2.7.3.5-3 can withstand seismic design basis loads without a loss of its safety function.
6.a Class 1E equipment, identified in Table 2.7.3.5-2, is powered from its respective Class 1E division.	6.a A test will be performed on each division of the as-built Class 1E equipment identified in Table 2.7.3.5-2 by providing a simulated test signal only in the Class 1E division under test.	6.a The simulated test signal exists at the as-built Class 1E equipment identified in Table 2.7.3.5-2 under test.
6.b Separation is provided between redundant divisions of ECWS Class 1E cables, and between Class 1E cables and non-Class 1E cables.	6.b Inspections of the as-built Class 1E divisional cables will be performed.	6.b Physical separation or electrical isolation is provided in accordance with RG 1.75 between the as-built cables of redundant ECWS Class 1E divisions and between Class 1E cables and non-Class 1E cables.
7. The ECWS removes heat from various cooling coils during all plant operating conditions, including normal plant operating, abnormal and accident conditions.	7.i A test and analysis that determines the heat removal capability of the as-built ECWS will be performed.	7.i A report exists and concludes that the heat removal capability of the as-built ECWS is greater than or equal to the design values for all plant operating conditions, including normal plant operating, abnormal and accident conditions.

Table 2.7.3.5-5 Essential Chilled Water System Inspections, Tests, Analyses, and Acceptance Criteria (Sheet 5 of 7)

Design Commitment	Inspections, Tests, Analyses	Acceptance Criteria
	7.ii Tests will be performed to confirm that the as-built ECW pumps identified in Table 2.7.3.5-2 provide flow to the essential chiller units.	7.ii The as-built ECW pumps identified in Table 2.7.3.5-2 are capable of achieving their design flow rate to the essential chiller units.
8. The remotely operated valves identified in Table 2.7.3.5-2 as having PSMS control perform an active safety function after receiving a signal from PSMS.	8. Test will be performed on the as-built remotely operated valves identified in Table 2.7.3.5-2 using simulated signals.	8. The as-built remotely operated valves identified in Table 2.7.3.5-2 as having PSMS control perform the active function identified in the table after receiving a simulated signal.
9.a The remotely operated valves and check valves, identified in Table 2.7.3.5-2 as having an active safety function, perform an active safety function to change position as indicated in the table.	9.a.i Type tests or a combination of type tests and analyses of the remotely operated valves identified in Table 2.7.3.5-2 as having an active safety function will be performed that demonstrate the capability of the valve to operate under its design conditions.	9.a.i A report exists and concludes that each remotely operated valve identified in Table 2.7.3.5-2 as having an active safety function changes position as indicated in Table 2.7.3.5-2 under design conditions.
	9.a.ii Tests of the as-built remotely operated valves identified in Table 2.7.3.5-2 as having an active safety function will be performed under preoperational flow, differential pressure, and temperature conditions.	9.a.ii Each as-built remotely operated valve identified in Table 2.7.3.5-2 as having an active safety function changes position as indicated in Table 2.7.3.5-2 under preoperational test conditions.
	9.a.iii Inspections will be performed of the as-built remotely operated valves identified in Table 2.7.3.5-2 as having an active safety function.	9.a.iii Each as-built remotely operated valve identified in Table 2.7.3.5-2 as having an active safety function is bounded by the type tests, or a combination of type tests and analyses.
	9.a.iv Tests of the as-built check valves identified in Table 2.7.3.5-2 as having an active safety function will be performed under preoperational pressure, temperature, and flow conditions.	9.a.iv Each as-built check valve identified in Table 2.7.3.5-2 as having an active safety function changes position as indicated in Table 2.7.3.5-2 under preoperational test conditions.

Table 2.7.3.5-5 Essential Chilled Water System Inspections, Tests, Analyses, and Acceptance Criteria (Sheet 6 of 7)

Design Commitment	Inspections, Tests, Analyses	Acceptance Criteria
9.b After loss of motive power, the remotely operated valves, identified in Table 2.7.3.5-2, assume the indicated loss of motive power position.	9.b Tests of the as-built remotely operated valves identified in Table 2.7.3.5-2 will be performed under the conditions of loss of motive power.	9.b Upon loss of motive power, each as-built remotely operated valve identified in Table 2.7.3.5-2 assumes the indicated loss of motive power position.
10.a Controls are provided in the MCR to start and stop the ECW pumps and essential chiller units identified in Table 2.7.3.5-4.	10.a Tests will be performed on the as-built ECW pumps and essential chiller units identified in Table 2.7.3.5-4 using controls in the as-built MCR.	10.a Controls in the as-built MCR start and stop the as-built ECW pumps and essential chiller units identified in Table 2.7.3.5-4.
10.b The ECW pumps and essential chiller units identified in Table 2.7.3.5-2 as having PSMS control perform an active safety function after receiving a signal from PSMS.	10.b Tests will be performed on the as-built ECW pumps and essential chiller units identified in Table 2.7.3.5-2 using simulated signals.	10.b The as-built ECW pumps and essential chiller units identified in Table 2.7.3.5-2 as having PSMS control perform the active safety function identified in the table after receiving a simulated signal.
11. Displays identified in Table 2.7.3.5-4 are provided in the MCR.	11. Inspections will be performed for retrievability of the displays identified in Table 2.7.3.5-4 in the as-built MCR.	11. Displays identified in Table 2.7.3.5-4 can be retrieved in the as-built MCR.
12. Displays and controls identified in Table 2.7.3.5-4 are provided in the RSC.	12.i Inspection will be performed for retrievability of the displays identified in Table 2.7.3.5-4 in the as-built RSC.	12.i Displays identified in Table 2.7.3.5-4 can be retrieved in the as-built RSC.
	12.ii Tests of the as-built RSC control functions identified in Table 2.7.3.5-4 will be performed.	12.ii Controls in the as-built RSC operate each as-built component identified in Table 2.7.3.5-4 with an RSC control function.

Table 2.7.3.5-5 Essential Chilled Water System Inspections, Tests, Analyses, and Acceptance Criteria (Sheet 7 of 7)

Design Commitment	Inspections, Tests, Analyses	Acceptance Criteria
13. The ECW pumps have sufficient net positive suction head (NPSH).	13. Tests to measure the as-built ECW pump suction pressure will be performed. Inspections and analysis to determine NPSH available to each pump will be performed. The analysis will consider vendor test results of required NPSH and the effects of: – pressure losses for pump inlet piping and components, – suction from the ECWS compression tank with operating pressure and water level at their minimum value.	13. A report exists and concludes that the NPSH available exceeds the required NPSH.
14. The ECW compression tank volume accommodates system thermal expansion and contraction, and 7-day system operation without make-up.	14. Inspection and analysis of the as-built ECW compression tank size will be performed.	14. A report exists and concludes that the as-built ECW compression tank accommodates system thermal expansion and contraction, and 7-day system operation without make-up.

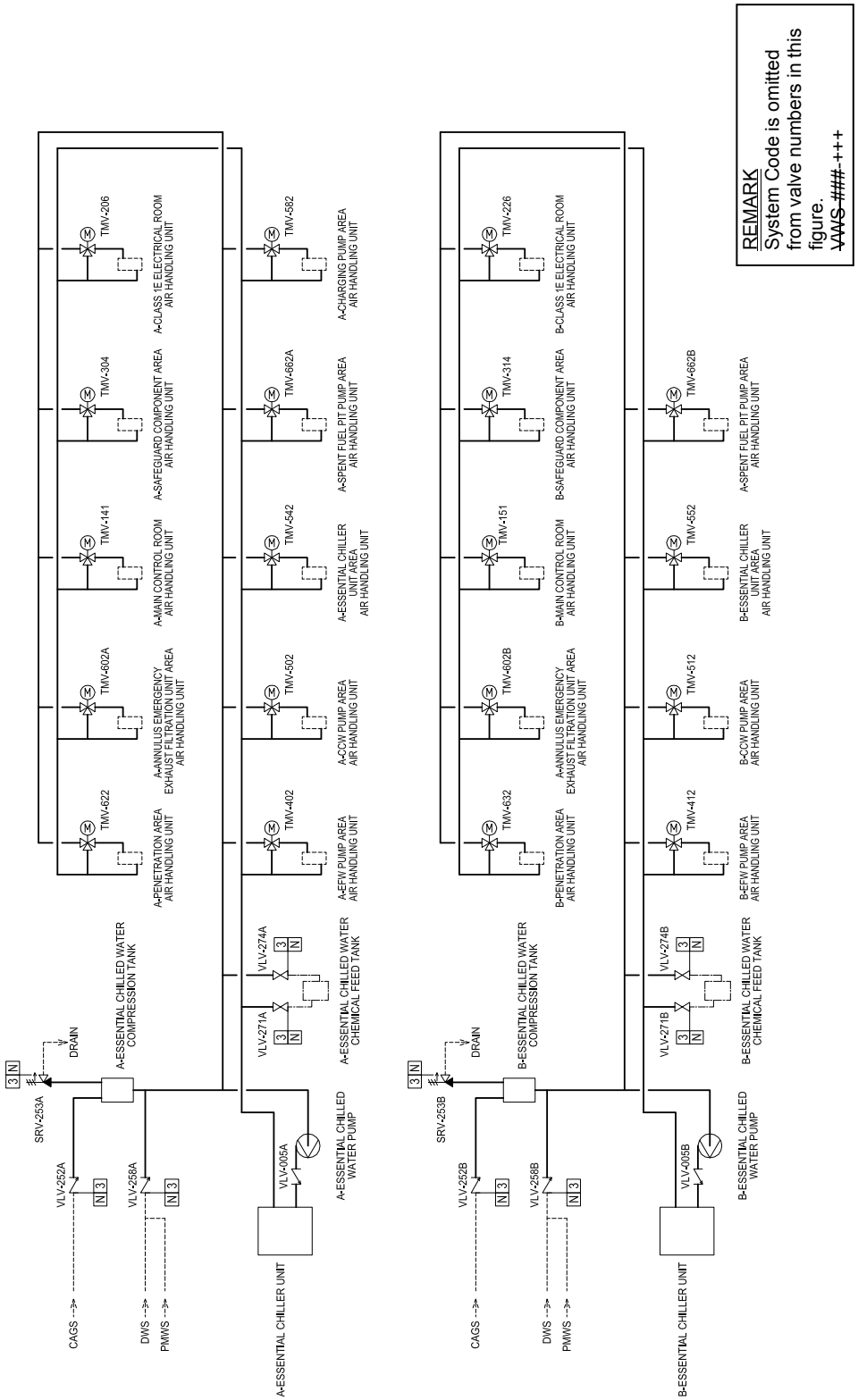

Figure 2.7.3.5-1 Essential Chilled Water System (Sheet 1 of 2)

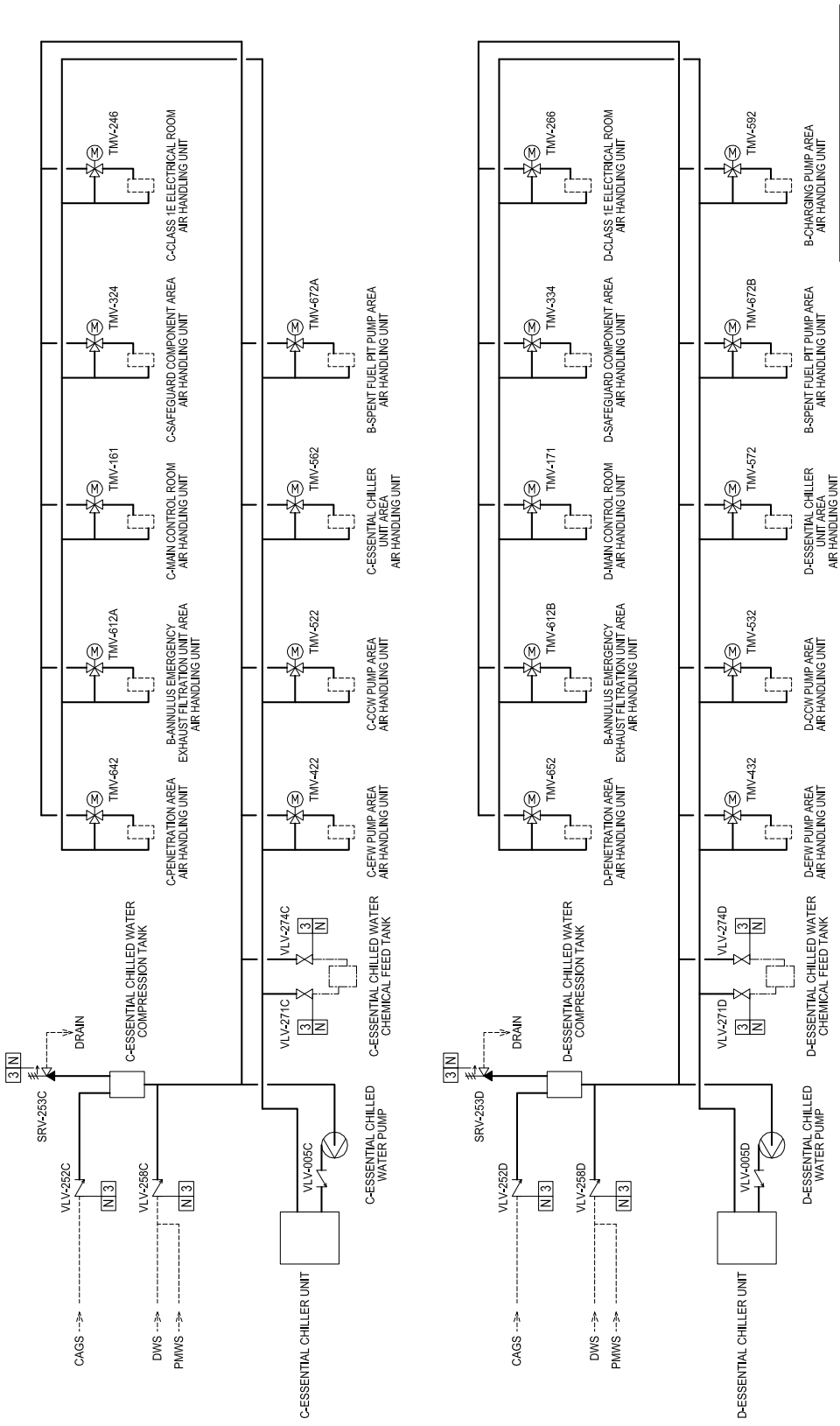

Figure 2.7.3.5-1 Essential Chilled Water System (Sheet 2 of 2)

2.7.3.6 Non-Essential Chilled Water System (non-ECWS)

2.7.3.6.1 Design Description

The non-ECWS provides chilled water for the non safety-related HVAC systems during normal plant operation and loss of offsite power (LOOP). With the exception of the piping and valves between and including the containment isolation valves, which are safety-related ASME Code Section III Class 2 seismic Category I, the non-ECWS is a non safety-related system. The non-ECWS provides the containment isolation function, as described in Section 2.11.2, for the non-ECWS lines penetrating the containment. The major components of the non-ECWS are located in the auxiliary building and on the roof of the auxiliary building. The non-ECWS includes chiller units, chilled water pumps, condenser water pumps, and cooling towers. A non-ECWS condenser line is connected to the CCWS to provide alternate component cooling water to the charging pumps.

1. The functional arrangement of the non-ECWS is as described in the Design Description of Subsection 2.7.3.6.1 and in Table 2.7.3.6-1, and as shown in Figure 2.7.3.6-1.

2. Deleted.

3. Deleted.

2.7.3.6.2 Inspections, Tests, Analyses, and Acceptance Criteria

Table 2.7.3.6-3 describes the ITAAC for the non-ECWS.

The ITAAC associated with the non-ECWS equipment, components, and piping that comprise a portion of the CIS are described in Table 2.11.2-2.

Table 2.7.3.6-1 Non-Essential Chilled Water System Location of Equipment and Piping

System and Components	Location
Non-Essential chilled water system piping and valves between and including the containment isolation valves, VWS-MOV-403,-407, -422 and VWS-VLV-421, -423.	Containment Reactor Building
CCW supply and return line isolation valves, VWS-MOV-424, -425	Reactor Building

Table 2.7.3.6-2 Non-Essential Chilled Water System Piping Characteristics

Pipe Line Name	ASME Code Section III Class	Seismic Category I
Non-Essential chilled water system piping and valves between and including the containment isolation valves, VWS-MOV-403,-407, -422 and VWS-VLV-421, -423.	2	Yes
CCW supply and return line isolation valves, VWS-MOV-424 and -425	3	Yes

NOTE:
Dash (-) indicates not applicable

Table 2.7.3.6-3 Non-Essential Chilled Water System Inspections, Tests, Analyses, and Acceptance Criteria

Design Commitment	Inspections, Tests, Analyses	Acceptance Criteria
1. The functional arrangement of the non-ECWS is as described in the Design Description of Subsection 2.7.3.6.1 and in Table 2.7.3.6-1, and as shown in Figure 2.7.3.6-1.	1. Inspection of the as-built non-ECWS will be performed.	1. The as-built non-ECWS conforms to the functional arrangement described in the Design Description of Subsection 2.7.3.6.1 and in Table 2.7.3.6-1, and as shown in Figure 2.7.3.6-1.
2. Deleted.	2. Deleted.	2. Deleted.
3. Deleted.	3. Deleted.	3. Deleted.

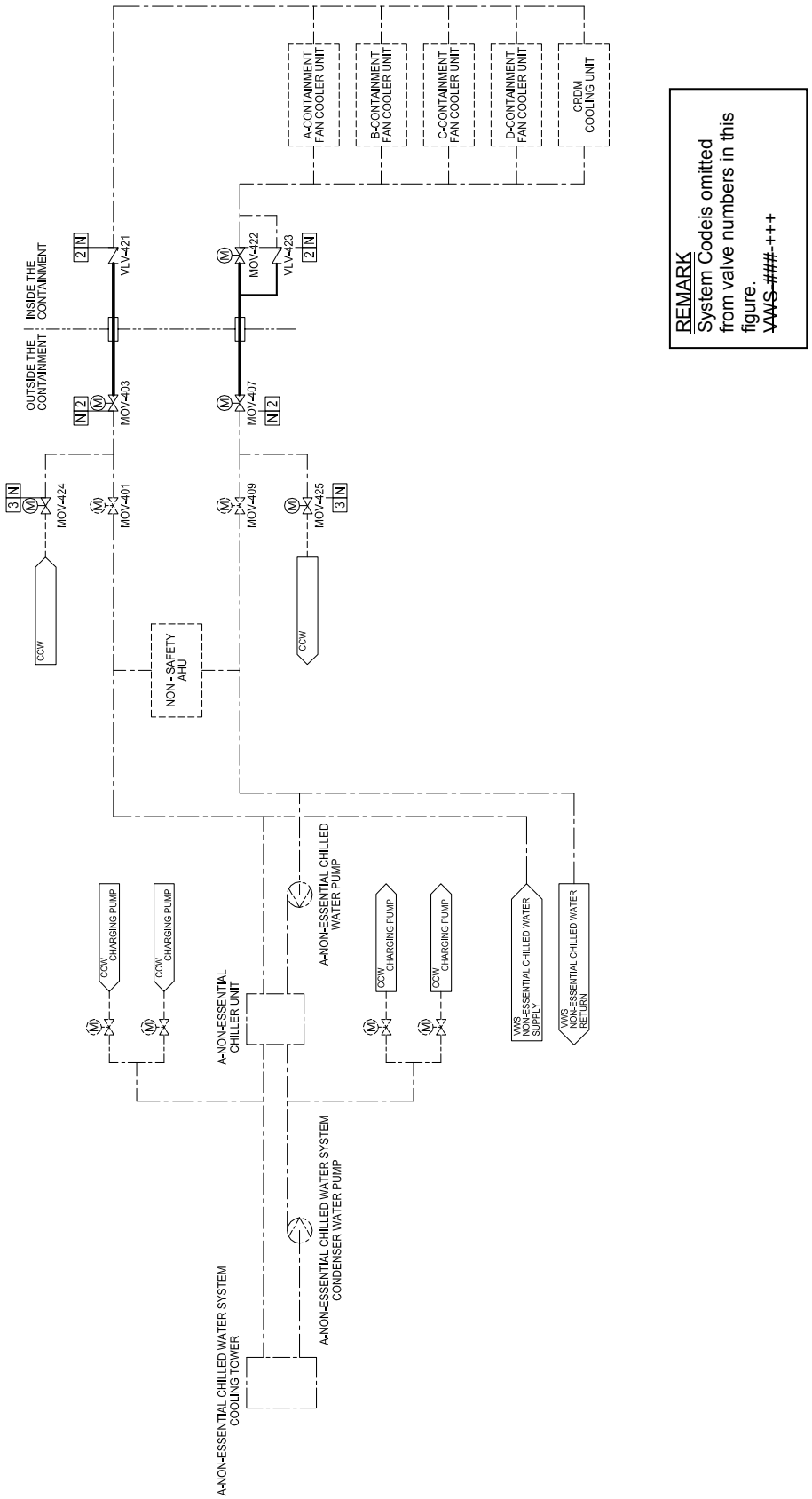

REMARK
System Codeis omitted from valve numbers in this figure.
~~VWS ### -+++~~

Figure 2.7.3.6-1 Non-Essential Chilled Water System

2.7.4 Radwaste Systems

2.7.4.1 Liquid Waste Management System (LWMS)

2.7.4.1.1 Design Description

The LWMS is a non safety-related system. The reactor coolant drain tank and the containment vessel sump discharge piping penetrate the PCCV pressure boundary and include safety-related containment isolation valves as described in Section 2.11.2. The LWMS monitors, controls, collects, processes, handles, stores, and disposes of liquid radioactive waste generated during normal operation, including anticipated operational occurrences (AOOs). The LWMS ensures that liquid waste releases comply with 10 CFR 20, Appendix B, Table 2, effluent concentration and dose limits, and 10 CFR 50, Appendix I dose objectives for liquid effluents.

The LWMS is located in the containment, the auxiliary building (A/B), and the reactor building (R/B).

The LWMS subsystems separately process liquid wastes from various sources in the most appropriate manner for each type of waste. These subsystems are interconnected to provide processing flexibility and redundancy.

The LWMS subsystems include:

- Equipment and floor drain subsystem
- Detergent drain subsystem
- Chemical drain subsystem
- Reactor coolant drain subsystem

The LWMS segregates, collects, and treats liquid waste using ion exchanger columns and filters to reduce radioactivity to levels acceptable for release or re-use.

1. The functional arrangement of the LWMS is as described in the Design Description of Subsection 2.7.4.1.1 and Table 2.7.4.1-2.
2. Upon receipt of a high radiation signal above the pre-determined setpoint, the LWMS discharge valves close automatically.
3. Deleted.
4. Deleted.
5. Deleted.
6. LWMS filters and demineralizers identified in Table 2.7.4.1-2 have the capacity to maintain radioactivity releases within regulatory limits.

7. An alarm from the liquid radwaste discharge radiation monitor is provided in the MCR.

2.7.4.1.2 Inspections, Tests, Analyses, and Acceptance Criteria

Table 2.7.4.1-1 describes the ITAAC for the LWMS.

The ITAAC associated with the LWMS equipment, components, and piping that comprise a portion of the CIS are described in Table 2.11.2-2.

Table 2.7.4.1-1 Liquid Waste Management System Inspections, Tests, Analyses, and Acceptance Criteria

Design Commitment	Inspections, Tests, Analyses	Acceptance Criteria
1. The functional arrangement of the LWMS is as described in the Design Description of Subsection 2.7.4.1.1 and in Table 2.7.4.1-2.	1. Inspection of the as-built LWMS will be performed.	1. The as-built LWMS conforms to the functional arrangement as described in the Design Description of Subsection 2.7.4.1.1 and in Table 2.7.4.1-2.
2. Upon receipt of a high radiation signal above the pre-determined setpoint, the LWMS discharge valves close automatically.	2. Tests of the as-built LWMS discharge valves will be performed using a simulated test signal.	2. Upon receipt of a simulated LWMS high radiation test signal, the as-built LWMS discharge valves close automatically.
3. Deleted.	3. Deleted.	3. Deleted.
4. Deleted.	4. Deleted.	4. Deleted.
5. Deleted.	5.a Deleted.	5.a Deleted.
	5.b Deleted.	5.b Deleted.
6. LWMS filters and demineralizers identified in Table 2.7.4.1-2 have the capacity to maintain radioactivity releases within regulatory limits.	6. Inspections will be performed to verify the amount of filtration and ion exchange media loaded in LWMS filters and demineralizer vessels.	6. The vendor specified filter and ion exchange media for LWMS filters and demineralizers identified in Table 2.7.4.1-2 is loaded in the filter housings and demineralizer vessels.
7. An alarm from the liquid radwaste discharge radiation monitor is provided in the MCR.	7. Inspection will be performed for retrievability of the alarm from the liquid radwaste discharge radiation monitor in the as-built MCR.	7. An alarm from the liquid radwaste discharge radiation monitor can be retrieved in the as-built MCR.

Table 2.7.4.1-2 Liquid Waste Management System Major Component

Component Name	Quantity	Component Location
Equipment and floor drain subsystem		
Waste holdup tanks	4	Auxiliary Building
Waste holdup tank pumps	2	Auxiliary Building
Waste monitor tanks	2	Auxiliary Building
Waste monitor tank pump	2	Auxiliary Building
Waste effluent Inlet filter	2	Auxiliary Building
Waste demineralizer	4	Auxiliary Building
Activated carbon filter	1	Auxiliary Building
Detergent drain subsystem		
Detergent drain tank	1	Auxiliary Building
Detergent drain tank pump	1	Auxiliary Building
Detergent drain monitor tank	1	Auxiliary Building
Detergent drain monitor tank pump	1	Auxiliary Building
Detergent Drain Filter	1	Auxiliary Building
Chemical drain subsystem		
Chemical drain tank	1	Auxiliary Building
Chemical drain tank pump	1	Auxiliary Building
Reactor coolant drain subsystem		
Containment vessel reactor coolant drain tank	1	Containment
Containment vessel reactor coolant drain pumps	2	Containment

2.7.4.2 Gaseous Waste Management System (GWMS)

2.7.4.2.1 Design Description

The GWMS is a non safety-related system. The GWMS monitors, controls, collects, processes, handles, stores, and disposes of gaseous radioactive waste generated as the result of normal operation, including anticipated operational occurrences (AOOs). The GWMS processes potentially radioactive gases using charcoal beds to remove iodine and create sufficient delay time to allow decay of short half-life radioactive isotopes prior to release. The GWMS ensures that gaseous waste releases comply with 10 CFR Part 20, Appendix B, concentration and dose limits, and 10 CFR Part 50, Appendix I dose objectives for gaseous effluents. The GWMS is located in the auxiliary building (A/B).

The GWMS includes the following components:

- Waste gas surge tanks
- Charcoal beds
- Waste gas compressors
- Waste gas dryer

1. The functional arrangement of the GWMS is as described in the Design Description of Subsection 2.7.4.2.1 and in Table 2.7.4.2-2.
2. Upon receipt of a high radiation signal above the pre-determined setpoint, the GWMS discharge valves close automatically.
3. Deleted.
4. Deleted.
5. GWMS charcoal bed columns each contain the volume needed to allow decay of short half-life isotopes to keep releases within regulatory limits.
6. An alarm from the gaseous radwaste discharge radiation monitor is provided in the MCR.

2.7.4.2.2 Inspections, Tests, Analyses, and Acceptance Criteria

Table 2.7.4.2-1 describes the ITAAC for the GWMS.

Table 2.7.4.2-1 Gaseous Waste Management System Inspections, Tests, Analyses, and Acceptance Criteria

Design Commitment	Inspections, Tests, Analyses	Acceptance Criteria
1. The functional arrangement of the GWMS is as described in the Design Description of Subsection 2.7.4.2.1 and in Table 2.7.4.2-2.	1. Inspection of the as-built GWMS will be performed.	1. The as-built GWMS conforms to the functional arrangement as described in the Design Description of Subsection 2.7.4.2.1 and in Table 2.7.4.2-2.
2. Upon receipt of a high radiation signal above the pre-determined setpoint, the GWMS discharge valves close automatically.	2. Tests of the as-built GWMS discharge valves will be performed using a simulated test signal.	2. Upon receipt of a simulated GWMS high radiation test signal, the as-built GWMS discharge valves close automatically.
3. Deleted.	3. Deleted.	3. Deleted.
4. Deleted.	4.a Deleted.	4.a Deleted.
	4.b Deleted.	4.b Deleted.
5. GWMS charcoal bed columns each contain the volume needed to allow decay of short half-life isotopes to keep releases within regulatory limits.	5. Inspections will be performed to verify the contained volume of each of the charcoal beds.	5. The contained volume in each of the charcoal beds is equal to or greater than 70 ft^3/column.
6. An alarm from the gaseous radwaste discharge radiation monitor is provided in the MCR.	6. Inspection will be performed for the retrievability of the alarm from the gaseous radwaste discharge monitor in the as-built MCR.	6. An alarm from gaseous radwaste discharge radiation monitor can be retrieved in the as-built MCR.

Table 2.7.4.2-2 Gaseous Waste Management System Major Component

Component Name	Quantity	Component Location
Waste gas surge tanks	4	Auxiliary Building
Charcoal beds	4	Auxiliary Building
Waste gas compressors	2	Auxiliary Building
Waste gas dryer	1	Auxiliary Building

2.7.4.3 Solid Waste Management System (SWMS)

2.7.4.3.1 Design Description

The SWMS is non safety-related system that collects and temporarily stores radioactive wastes prior to processing or shipment.

The SWMS is located in the A/B. The SWMS consists of several subsystems, each of which is functionally arranged to manage various solid radioactive waste products, including spent resin, spent carbon, spent filter elements, sludge and oily waste, dry active waste, contaminated clothing, contaminated broken tools and other contaminated materials.

1. The functional arrangement of the SWMS is as described in the Design Description of Subsection 2.7.4.3.1 and in Table 2.7.4.3-2.

2. Deleted.

3. Deleted.

4. The SWMS spent resin storage tanks identified in Table 2.7.4.3-2 provide the capability to store radioactive spent resins prior to processing.

2.7.4.3.2 Inspections, Tests, Analyses, and Acceptance Criteria

Table 2.7.4.3-1 describes the ITAAC for the SWMS.

Table 2.7.4.3-1 Solid Waste Management System Inspections, Tests, Analyses, and Acceptance Criteria

Design Commitment	Inspections, Tests, Analyses	Acceptance Criteria
1. The functional arrangement of the SWMS is as described in the Design Description of Subsection 2.7.4.3.1 and in Table 2.7.4.3-2.	1. Inspections of the as-built SWMS will be performed.	1. The as-built SWMS conforms to the functional arrangement as described in the Design Description of Subsection 2.7.4.3.1 and in Table 2.7.4.3-2.
2. Deleted.	2. Deleted.	2. Deleted.
3. Deleted.	3.a Deleted.	3.a Deleted.
	3.b Deleted.	3.b Deleted.
4. The SWMS spent resin storage tanks identified in Table 2.7.4.3-2 provide the capability to store radioactive spent resins prior to processing.	4. Inspection of the SWMS spent resin storage tanks identified in Table 2.7.4.3-2 will be performed.	4. The volume of each SWMS spent resin storage tank identified in Table 2.7.4.3-2 is at least 800 ft^3.

Table 2.7.4.3-2 Solid Waste Management System Spent Resin Tanks

Component Name	Quantity	Component Location
SWMS spent resin storage tanks	2	Auxiliary Building

2.7.5 Heating, Ventilation, and Air Conditioning (HVAC) Systems

2.7.5.1 Main Control Room HVAC System

2.7.5.1.1 Design Description

The main control room (MCR) HVAC system protects the operators against a release of radioactive material, provides protection from smoke in the outside air intakes, and provides conditioned air to the MCR and other areas within the control room envelope (CRE). The capability to purge smoke from the MCR is also provided. The MCR HVAC system is a safety-related system, except for the toilet/kitchen exhaust and smoke purge fans.

The MCR HVAC system is located within the reactor building and consists of two 100% capacity MCR emergency filtration units and four 50% capacity MCR air handling units.

1.a The functional arrangement of the MCR HVAC system is as described in the Design Description of Subsection 2.7.5.1.1 and as shown in Figure 2.7.5.1-1.

1.b Each mechanical division of the MCR air handling units (Divisions A, B, C & D) and MCR emergency filtration units (Divisions A & B) identified in Table 2.7.5.1-1 is physically separated from the other divisions so as not to preclude accomplishment of the safety function.

2. The seismic Category I equipment, identified in Table 2.7.5.1-1, can withstand seismic design basis loads without loss of safety function.

3.a Class 1E equipment, identified in Table 2.7.5.1-1, is powered from its respective Class 1E division.

3.b Separation is provided between redundant divisions of MCR HVAC system Class 1E cables, and between Class 1E cables and non-Class 1E cables.

4.a The MCR HVAC system provides conditioned air to maintain the temperature within design limits of the CRE during normal operations, abnormal and accident conditions of the plant.

4.b The MCR HVAC system provides filter efficiencies and system airflow as required in the safety analysis.

4.c The unfiltered CRE inleakage is within the performance value as specified in the safety analysis.

5.a The remotely operated dampers identified in Table 2.7.5.1-1 as having PSMS control, perform an active safety function after receiving a signal from PSMS.

5.b After loss of motive power, the remotely operated dampers, identified in Table 2.7.5.1-1, assume the indicated loss of motive power position.

5.c The MCR HVAC system isolation dampers close within their design basis closure time after receiving a MCR isolation signal or a smoke detection signal.

5.d The fire dampers in the ductwork of the MCR HVAC system that penetrates the fire barriers that are required to protect safe shutdown capability close under design air flow conditions.

5.e Controls are provided in the MCR to open and close the remotely operated dampers identified in Table 2.7.5.1-2.

5.f The remotely operated dampers and tornado dampers, identified in Table 2.7.5.1-1 as having an active safety function, perform an active safety function to change position as indicated in the table.

6.a Controls are provided in the MCR to start and stop the MCR HVAC system air handling units and filtration units identified in Table 2.7.5.1-2.

6.b The MCR HVAC system air handling unit fans and emergency filtration unit fans and electric heaters, identified in Table 2.7.5.1-2, start after receiving a MCR isolation signal (emergency pressurization mode).

6.c The MCR HVAC system air handling unit fans identified in Table 2.7.5.1-2 start after receiving an outside air smoke detection signal to initiate CRE emergency isolation mode.

7. Alarms and displays identified in Table 2.7.5.1-2 are provided in the MCR.

8. Alarms, displays and controls identified in Table 2.7.5.1-2 are provided in the RSC.

2.7.5.1.2 Inspections, Tests, Analyses, and Acceptance Criteria

Table 2.7.5.1-3 describes the inspections, tests analyses, and associated acceptance criteria for the MCR HVAC system. Table 2.7.3.5-5 describes the ITAAC for the ECWS piping that supplies cooling water to the main control room air handling unit cooling coils.

Table 2.7.5.1-1 Main Control Room HVAC System Equipment Characteristics (Sheet 1 of 3)

Equipment Name	Tag No.	ASME Code Section III Class	Seismic Category I	Remotely Operated Damper	Class 1E/ Qual. For Harsh Envir.	PSMS Control	Active Safety Function	Loss of Motive Power Position
Main Control Room Air Handling Units	VRS-MAH-101 A, B, C, D	–	Yes	–	–/No	–	None	–
Main Control Room Air Handling Unit Fans	VRS-MFN-101 A, B, C, D	–	Yes	–	Yes/No	MCR isolation	Start	–
Main Control Room Air Handling Unit Cooling Coils	VRS-MCL-101 A, B, C, D	–	Yes	–	–/No	–	None	–
Main Control Room Air Handling Unit Electric Heating Coils	VRS-MEH-101 A, B, C, D	–	Yes	–	Yes/No	MCR isolation	Energized	Deenergized
Main Control Room Emergency Filtration Units	VRS-MFU-111 A, B	–	Yes	–	–/No	–	None	–
Main Control Room Emergency Filtration Unit Fans	VRS-MFN-111 A, B	–	Yes	–	Yes/No	MCR isolation	Start	–
Main Control Room Emergency Filtration Unit Electric Heating Coils	VRS-MEH-111 A, B	–	Yes	–	Yes/No	MCR isolation	Energized	Deenergized

Table 2.7.5.1-1 Main Control Room HVAC System Equipment Characteristics (Sheet 2 of 3)

Equipment Name	Tag No.	ASME Code Section III Class	Seismic Category I	Remotely Operated Damper	Class 1E/ Qual. For Harsh Envir.	PSMS Control	Active Safety Function	Loss of Motive Power Position
Main Control Room Air Intake Isolation Dampers	VRS-EHD-101 A, B, 102A, B	–	Yes	Yes	Yes/No	MCR isolation	Transfer Open (pressurization mode)	Closed
						Smoke detection	Transfer Closed (isolation mode)	
Main Control Room Toilet/Kitchen Exhaust Line Isolation Dampers	VRS-AOD-121, 122	–	Yes	Yes	Yes/No	MCR isolation	Transfer Closed	Closed
Main Control Room Smoke Purge Line Isolation Dampers	VRS-AOD-131, 132	–	Yes	Yes	Yes/No	MCR isolation	Transfer Closed	Closed
Main Control Room Emergency Filtration Unit Air Intake Dampers	VRS-MOD-111 A, B	–	Yes	Yes	Yes/No	MCR isolation	Transfer Open	As is
Main Control Room Emergency Filtration Unit Air Return Dampers	VRS-MOD-112 A, B	–	Yes	Yes	Yes/No	MCR isolation	Transfer Open	As is
Main Control Room Normal Air Intake Line Isolation Dampers	VRS-AOD-103 A, B	–	Yes	Yes	Yes/No	MCR isolation	Transfer Closed	Closed

Table 2.7.5.1-1 Main Control Room HVAC System Equipment Characteristics (Sheet 3 of 3)

Equipment Name	Tag No.	ASME Code Section III Class	Seismic Category I	Remotely Operated Damper	Class 1E/ Qual. For Harsh Envir.	PSMS Control	Active Safety Function	Loss of Motive Power Position
Main Control Room Circulation Line Changeover Dampers	VRS-EHD-104 A, B, 107A, B	–	Yes	Yes	Yes/No	MCR isolation	Transfer Open	Closed
Main Control Room Air Handling Unit Inlet Dampers	VRS-EHD-105 A, B, C, D	–	Yes	Yes	Yes/No	Fan Start	Transfer Open	Closed
Main Control Room Air Handling Unit Outlet Dampers	VRS-EHD-106 A, B, C, D	–	Yes	Yes	Yes/No	Fan Start	Transfer Open	Closed
Main Control Room Emergency Filtration Unit Fan Outlet Dampers	VRS-MOD-113 A, B	–	Yes	Yes	Yes/No	Fan Start	Transfer Open	As is
Tornado Dampers	VRS-OTD-108A,B, -124, -133	–	Yes	–	–/No	–	Transfer Closed (Tornado condition)	–
Ductwork	–	–	Yes	–	–/No	–	None	–
Main Control Room Temperature	VRS-TS-146, 156, 166, 176	–	Yes	–	Yes/No	–	–	–

NOTE: Dash (-) indicates not applicable

Table 2.7.5.1-2 Main Control Room HVAC System Equipment Alarms, Displays and Control Functions (Sheet 1 of 2)

Equipment/Instrument Name	MCR/RSC Alarm	MCR Display	MCR/RSC Control Function	RSC Display
Main Control Room Air Handling Unit Fans (VRS-MFN-101 A, B, C, D)	No	Yes	Yes	Yes
Main Control Room Air Handling Unit Electric Heating Coils (VRS-MEH-101 A, B, C, D)	Yes	Yes	Yes	Yes
Main Control Room Emergency Filtration Unit Fans (VRS-MFN-111 A, B)	No	Yes	Yes	Yes
Main Control Room Emergency Filtration Unit Electric Heating Coils (VRS-MEH-111 A, B)	Yes	Yes	Yes	Yes
Main Control Room Air Intake Isolation Dampers (VRS-EHD-101 A, B, 102 A, B)	No	Yes	Yes	Yes
Main Control Room Toilet/Kitchen Exhaust Line Isolation Dampers (VRS-AOD-121,122)	No	Yes	Yes	Yes
Main Control Room Smoke Purge Line Isolation Dampers (VRS-AOD-131,132)	No	Yes	Yes	Yes
Main Control Room Emergency Filtration Unit Air Intake Dampers (VRS-MOD-111 A, B)	No	Yes	Yes	Yes
Main Control Room Emergency Filtration Unit Air Return Dampers (VRS-MOD-112 A, B)	No	Yes	Yes	Yes
Main Control Room Normal Air Intake Line Isolation Dampers (VRS-AOD-103 A, B)	No	Yes	Yes	Yes
Main Control Room Circulation Line Changeover Dampers (VRS-EHD-104 A, B, 107 A, B)	No	Yes	Yes	Yes

Table 2.7.5.1-2 Main Control Room HVAC System Equipment Alarms, Displays and Control Functions (Sheet 2 of 2)

Equipment/Instrument Name	MCR/RSC Alarm	MCR Display	MCR/RSC Control Function	RSC Display
Main Control Room Air Handling Unit Inlet Dampers (VRS-EHD-105 A, B, C, D)	No	Yes	No	Yes
Main Control Room Air Handling Unit Outlet Dampers (VRS-EHD-106 A, B, C, D)	No	Yes	No	Yes
Main Control Room Emergency Filtration Unit Fan Outlet Dampers (VRS-MOD-113 A, B)	No	Yes	No	Yes
Main Control Room Temperature (VRS-TCA-146, 156, 166, 176)	Yes	No	No	No

Table 2.7.5.1-3 Main Control Room HVAC System Inspections, Tests, Analyses, and Acceptance Criteria (Sheet 1 of 5)

Design Commitment	Inspections, Tests, Analyses	Acceptance Criteria
1.a The functional arrangement of the MCR HVAC system is as described in the Design Description of Subsection 2.7.5.1.1 and as shown in Figure 2.7.5.1-1.	1.a Inspection of the as-built MCR HVAC system will be performed.	1.a The as-built MCR HVAC system conforms to the functional arrangement as described in the Design Description of Subsection 2.7.5.1.1 and as shown in Figure 2.7.5.1-1.
1.b Each mechanical division of the MCR air handling units (Divisions A, B, C & D) and MCR emergency filtration units (Divisions (A & B) identified in Table 2.7.5.1-1 is physically separated from the other divisions so as not to preclude accomplishment of the safety function.	1.b Inspections and analysis of the as-built MCR air handling units and MCR emergency filtration units identified in Table 2.7.5.1-1 will be performed.	1.b A report exists and concludes that each mechanical division of the as-built MCR air handling unit and the MCR emergency filtration units identified in Table 2.7.5.1-1 is physically separated from other mechanical divisions by spatial separation, barriers or enclosures so as to assure that the functions of the safety-related system are maintained.
2. The seismic Category I equipment, identified in Table 2.7.5.1-1, can withstand seismic design basis loads without loss of safety function.	2.i Inspections will be performed to verify that the as-built seismic Category I equipment identified in Table 2.7.5.1-1 is located in a seismic Category I structure.	2.i The as-built seismic Category I equipment identified in Table 2.7.5.1-1 is located in a seismic Category I structure.
	2.ii Type tests, analyses, or a combination of type tests and analyses of seismic Category I equipment identified in Table 2.7.5.1-1 will be performed using analytical assumptions, or will be performed under conditions, which bound the seismic design basis requirements.	2.ii A report exists and concludes that the seismic Category I equipment identified in Table 2.7.5.1-1 can withstand seismic design basis loads without loss of safety function.
	2.iii Inspections and analyses will be performed to verify that the as-built seismic Category I equipment identified in Table 2.7.5.1-1 ,including anchorages, is seismically bounded by the tested or analyzed conditions.	2.iii A report exists and concludes that the as-built seismic Category I equipment identified in Table 2.7.5.1-1, including anchorages, is seismically bounded by the tested or analyzed conditions.

Table 2.7.5.1-3 Main Control Room HVAC System Inspections, Tests, Analyses, and Acceptance Criteria (Sheet 2 of 5)

Design Commitment	Inspections, Tests, Analyses	Acceptance Criteria
3.a Class 1E equipment, identified in Table 2.7.5.1-1, is powered from its respective Class 1E division.	3.a A test will be performed on each division of the as-built Class 1E equipment identified in Table 2.7.5.1-1 by providing a simulated test signal only in the Class 1E division under test.	3.a The simulated test signal exists at the as-built Class 1E equipment, identified in Table 2.7.5.1-1, under test.
3.b Separation is provided between redundant divisions of MCR HVAC system Class 1E cables, and between Class 1E cables and non-Class 1E cables.	3.b Inspections of the as-built Class 1E divisional cables will be performed.	3.b Physical separation or electrical isolation is provided in accordance with RG 1.75 between the as-built cables of MCR HVAC system redundant Class 1E divisions and between Class 1E cables and non-Class 1E cables.
4.a The MCR HVAC system provides conditioned air to maintain the temperature within design limits of the CRE during normal operations, abnormal and accident conditions of the plant.	4.a Tests and analyses of the as-built MCR HVAC system will be performed.	4.a A report exists and concludes that the as-built MCR HVAC system is capable of providing conditioned air to maintain the temperature within design limits of the CRE during normal operations, abnormal and accident conditions of the plant.
4.b The MCR HVAC system provides filter efficiencies and system airflow as required in the safety analysis.	4.b.i Type tests, tests and analyses will be performed to verify that the filter efficiencies of the as-built MCR HVAC system meet or exceed the design specification.	4.b.i A report exists and concludes that the filters of the as-built MCR HVAC system meet or exceed the following filter efficiencies: Elemental iodine 95% Organic iodine 95% Particulates 99%
	4.b.ii Tests of the airflow for the as-built MCR HVAC system will be performed.	4.b.ii The as-built MCR HVAC system provides filtered air intake flow of $\leq$1200 cfm, filtered air recirculation flow of $\geq$2400 cfm, and maintains positive pressure in the as-built CRE in the emergency pressurization mode.

Table 2.7.5.1-3 Main Control Room HVAC System Inspections, Tests, Analyses, and Acceptance Criteria (Sheet 3 of 5)

Design Commitment	Inspections, Tests, Analyses	Acceptance Criteria
4.c The unfiltered CRE inleakage is within the performance value as specified in the safety analysis.	4.c Tests and analyses of as-built unfiltered CRE inleakage will be performed.	4.c A report exists and concludes that the as-built CRE unfiltered inleakage is ≤ 120 cfm with the MCR HVAC system operating in the emergency pressurization mode.
5.a The remotely operated dampers, identified in Table 2.7.5.1-1 as having PSMS control, perform an active safety function after receiving a signal from PSMS.	5.a Tests will be performed on the as-built remotely operated dampers identified in Table 2.7.5.1-1 as having PSMS control using simulated signals.	5.a The as-built remotely operated dampers identified in Table 2.7.5.1-1 as having PSMS control perform the active safety function identified in the table after receiving a simulated signal.
5.b After loss of motive power, the remotely operated dampers, identified in Table 2.7.5.1-1, assume the indicated loss of motive power position.	5.b Tests of the as-built remotely operated dampers identified in Table 2.7.5.1-1 will be performed under the conditions of loss of motive power.	5.b Upon loss of motive power, each as-built remotely operated damper identified in Table 2.7.5.1-1 assumes the indicated loss of motive power position.
5.c The MCR HVAC system isolation dampers close within their design basis closure time after receiving a MCR isolation signal or a smoke detection signal.	5.c Tests of the as-built MCR HVAC system isolation dampers will be performed using a simulated MCR isolation signal or a simulated smoke detection signal.	5.c The following as-built MCR HVAC system isolation dampers close within the required times: ≤10 seconds after receiving a simulated smoke detection signal VRS-EHD-101 A,B, 102 A,B ≤10 seconds after receiving a simulated MCR isolation signal VRS-AOD-121, 122 VRS-AOD-131, 132
5.d The fire dampers in the ductwork of the MCR HVAC system that penetrates the fire barriers that are required to protect safe shutdown capability close under design air flow conditions.	5.d Type tests, tests, a combination of type tests and analyses, or a combination of tests and analyses of the fire dampers will be performed under the design air flow conditions or conditions which bound the design air flow conditions.	5.d A report exists and concludes that the fire dampers of the MCR HVAC system in the ductwork that penetrates the fire barriers that are required to protect safe shutdown capability close under the design air flow conditions or the conditions which bound the design air flow conditions.

Table 2.7.5.1-3 Main Control Room HVAC System Inspections, Tests, Analyses, and Acceptance Criteria (Sheet 4 of 5)

Design Commitment	Inspections, Tests, Analyses	Acceptance Criteria
5.e Controls are provided in the MCR to open and close the remotely operated dampers identified in Table 2.7.5.1-2.	5.e Tests will be performed on the as-built remotely operated dampers identified in Table 2.7.5.1-2 using controls in the as-built MCR.	5.e Controls in the as-built MCR open and close the as-built remotely operated dampers identified in Table 2.7.5.1-2.
5.f The remotely operated dampers and tornado dampers, identified in Table 2.7.5.1-1 as having an active safety function, perform an active safety function to change position as indicated in the table.	5.f.i Tests of the as-built remotely operated dampers identified in Table 2.7.5.1-1 as having an active safety function will be performed under preoperational test conditions.	5.f.i Each as-built remotely operated damper identified in Table 2.7.5.1-1 as having an active safety function changes position as identified in Table 2.7.5.1-1 under preoperational test conditions.
	5.f.ii Tests of the as-built tornado dampers identified in Table 2.7.5.1-1 will be performed under preoperational test conditions.	5.f.ii Each as-built tornado damper changes position as identified in Table 2.7.5.1-1 under preoperational test conditions.
6.a Controls are provided in the MCR to start and stop the MCR HVAC system air handling units and filtration units identified in Table 2.7.5.1-2.	6.a Tests will be performed on the as-built air handling units and filtration units identified in Table 2.7.5.1-2 using controls in the as-built MCR.	6.a Controls in the as-built MCR start and stop the as-built MCR HVAC system air handling units and filtration units identified in Table 2.7.5.1-2.
6.b The MCR HVAC system air handling unit fans and emergency filtration unit fans and electric heaters, identified in Table 2.7.5.1-2, start after receiving a MCR isolation signal (emergency pressurization mode).	6.b Tests of the as-built MCR HVAC system air handling unit fans and emergency filtration unit fans and electric heaters, identified in Table 2.7.5.1-2, will be performed using a simulated signal.	6.b The as-built MCR HVAC system air handling unit fans and emergency filtration unit fans and electric heaters identified in Table 2.7.5.1-2, start after receiving a simulated MCR isolation signal (emergency pressurization mode).
6.c The MCR HVAC system air handling unit fans identified in Table 2.7.5.1-2 start after receiving an outside air smoke detection signal to initiate CRE emergency isolation mode.	6.c Tests of the as-built MCR HVAC system air handling unit fans identified in Table 2.7.5.1-2 will be performed using a simulated signal.	6.c The as-built MCR HVAC system air handling unit fans identified in Table 2.7.5.1-2 start after receiving a simulated outside air smoke detection signal to initiate CRE emergency isolation mode.
7. Alarms and displays identified in Table 2.7.5.1-2 are provided in the MCR.	7. Inspection will be performed for retrievability of the alarms and displays identified in Table 2.7.5.1-2 in the as-built MCR.	7. Alarms and displays, identified in Table 2.7.5.1-2, can be retrieved in the as-built MCR.

Table 2.7.5.1-3 Main Control Room HVAC System Inspections, Tests, Analyses, and Acceptance Criteria (Sheet 5 of 5)

Design Commitment	Inspections, Tests, Analyses	Acceptance Criteria
8. Alarms, displays and controls identified in Table 2.7.5.1-2 are provided in the RSC.	8.i Inspection will be performed for retrievability of the alarms and displays identified in Table 2.7.5.1-2 in the as-built RSC.	8.i Alarms and displays identified in Table 2.7.5.1-2.can be retrieved in the as-built RSC.
	8.ii Tests of the as-built RSC control functions identified in Table 2.7.5.1-2 will be performed.	8.ii Controls in the as-built RSC operate each as-built equipment identified in Table 2.7.5.1-2 with an RSC control function.

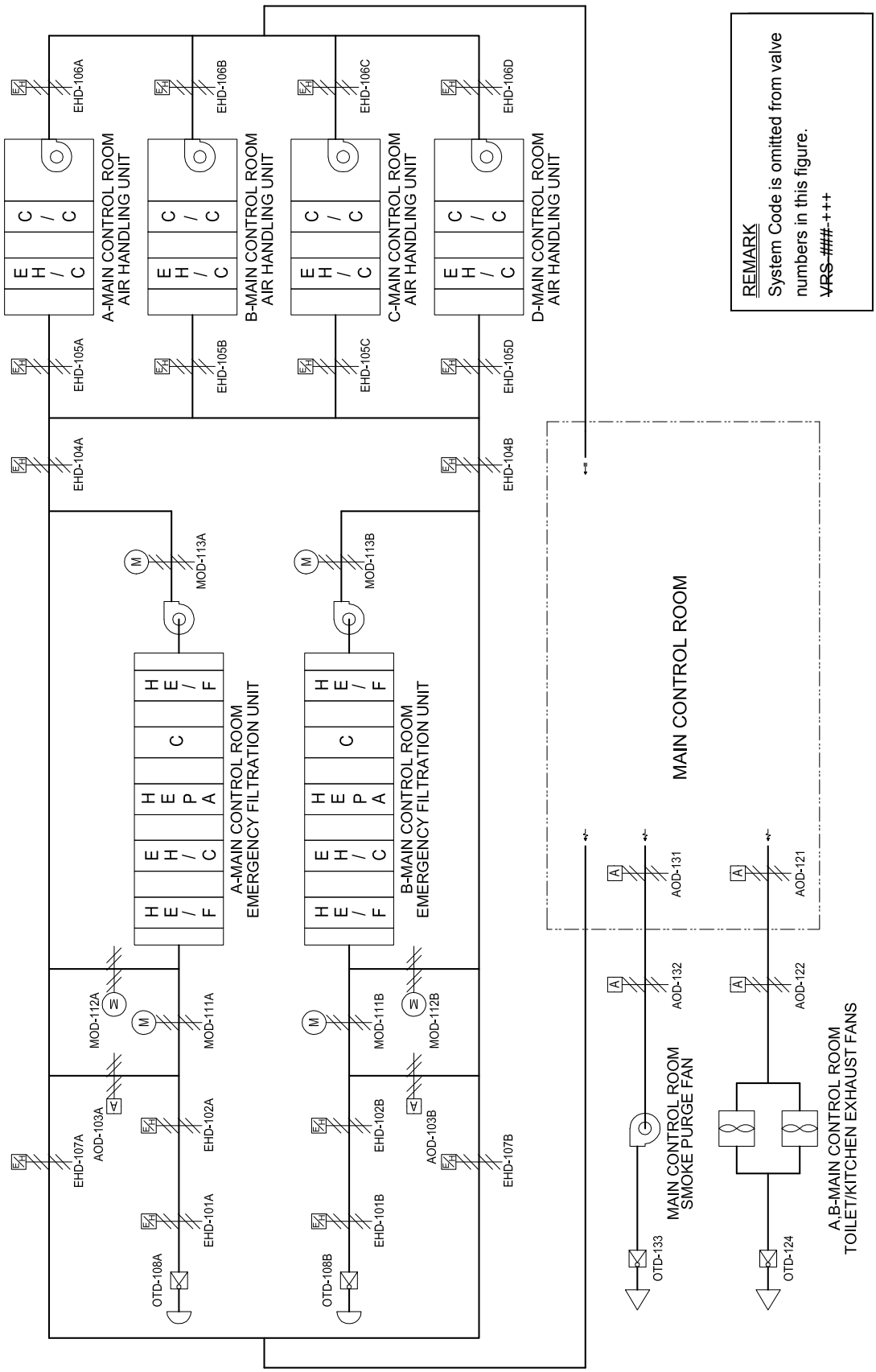

Figure 2.7.5.1-1 Main Control Room HVAC System

2.7.5.2 Engineered Safety Features Ventilation System (ESFVS)

The ESFVS provides conditioned air to areas that house ESF equipment.

The ESFVS includes:

- Annulus emergency exhaust system
- Class 1E electrical room HVAC system
- Safeguard component area HVAC system
- Emergency feedwater pump area HVAC system
- Safety related component area HVAC system

2.7.5.2.1 Design Description

2.7.5.2.1.1 Annulus Emergency Exhaust System

The annulus emergency exhaust system is a safety-related system that removes fission products by filtering the air it exhausts from penetration and safeguard component areas following accidents. The annulus emergency exhaust system maintains the penetration and safeguard component areas at a negative pressure.

The annulus emergency exhaust system is located within the reactor building. As shown in Figure 2.7.5.2-1, the annulus emergency exhaust system consists of two redundant divisions, each sized to have 100% capacity. Each division includes an exhaust filtration unit and fan.

2.7.5.2.1.2 Class 1E Electrical Room HVAC System

The Class 1E electrical room HVAC system is a safety-related system that provides conditioned air to the Class 1E I&C rooms, the Class 1E electrical rooms, the Class 1E battery rooms, the Class 1E UPS Rooms, the Class 1E battery charger rooms, emergency filtration unit rooms, MCR/Class 1E electrical room HVAC equipment rooms and the remote shutdown console room.

The Class 1E electrical room HVAC system is located within the reactor building and power source buildings. As shown in Figure 2.7.5.2-2, the Class 1E electrical room HVAC system consists of four redundant divisions, each sized to satisfy 100% of the cooling demand of two divisions of the equipment they serve. Each division includes an air handling unit, a return air fan and a battery room exhaust fan.

2.7.5.2.1.3 Safeguard Component Area HVAC System

The safeguard component area HVAC system is a safety-related system that provides conditioned air to each controlled area of the safeguard components area.

The safeguard components area HVAC system is located within the reactor building. As shown in Figure 2.7.5.2-3, each division of the safeguard component area HVAC system includes one 100% capacity air handling unit.

2.7.5.2.1.4 Emergency Feedwater Pump Area HVAC System

The emergency feedwater pump area HVAC system is a safety-related system that provides conditioned air to each emergency feedwater pump area.

The emergency feedwater pump area HVAC system is located within the reactor building. As shown in Figure 2.7.5.2-4, each division of the emergency feedwater pump area room HVAC system includes one 100% capacity air handling unit.

2.7.5.2.1.5 Safety Related Component Area HVAC System

The safety related component area HVAC system is a safety-related system that provides conditioned air to each area of the safety-related component areas listed below.

- Component cooling water pump area
- Essential chiller unit area
- Charging pump area
- Annulus emergency exhaust filtration unit area
- Penetration area
- Spent fuel pit pump area

The safety related component area HVAC system is located within the reactor building and power source buildings. As shown in Figure 2.7.5.2-5, each division of the safety related component area HVAC system includes one 100% capacity air handling unit.

1.a The functional arrangement of the ESFVS is as described in the Design Description of Subsection 2.7.5.2.1 and as shown in Figures 2.7.5.2-1 through 2.7.5.2-5.

1.b Each mechanical division of the annulus emergency exhaust system filtration units is physically separated from the other divisions of the annulus emergency exhaust system so as not to preclude accomplishment of the safety function.

1.c Each mechanical division of the Class 1E electrical room air handling units, Class 1E electrical room return air fans and Class 1E battery room exhaust fans is physically separated from the other divisions of the Class 1E electrical room HVAC system so as not to preclude accomplishment of the safety function.

1.d Each mechanical division of the safeguard component area air handling units is physically separated from the other divisions of the safeguard component area HVAC system so as not to preclude accomplishment of the safety function.

1.e Each mechanical division of the emergency feedwater pump area air handling units is physically separated from the other divisions of the emergency feedwater pump area HVAC system so as not to preclude accomplishment of the safety function.

1.f Each mechanical division of the safety-related component area air handling units is physically separated from the other divisions of the safety-related component area HVAC system so as not to preclude accomplishment of the safety function.

2. The seismic Category I equipment, identified in Table 2.7.5.2-1, can withstand seismic design basis loads without loss of safety function.

3.a Class 1E equipment, identified in Table 2.7.5.2-1, is powered from its respective Class 1E division.

3.b Separation is provided between redundant divisions of ESFVS Class 1E cables, and between Class 1E cables and non-Class 1E cables.

4.a The annulus emergency exhaust system provides filter efficiency and negative pressure used in the safety analysis.

4.b The Class 1E electrical room HVAC system provides conditioned air to maintain area temperature within design limits in rooms described in Section 2.7.5.2.1.2 during normal operations, abnormal and accident conditions of the plant.

4.c The Class 1E electrical room HVAC system provides battery room ventilation to maintain hydrogen concentration within the design limit during normal operations, abnormal and accident conditions of the plant.

4.d The safeguard component area HVAC system provides conditioned air to maintain area temperature within design limits in the safeguard component areas when the respective equipment is operating during abnormal and accident conditions of the plant.

4.e The emergency feedwater pump area HVAC system provides conditioned air to maintain area temperature within design limits in the emergency feedwater pump areas when the respective equipment is operating during abnormal and accident conditions of the plant.

4.f The safety-related component area HVAC system provides conditioned air to maintain area temperature within design limits in each individual safety-related component area, when the respective equipment is operating during abnormal and accident conditions of the plant.

5.a The remotely operated dampers, identified in Table 2.7.5.2-1 as having PSMS control, perform an active safety function after receiving a signal from PSMS.

5.b After loss of motive power, the remotely operated dampers, identified in Table 2.7.5.2-1, assume the indicated loss of motive power position.

5.c The fire dampers in the ductwork of the ESFVS that penetrates the fire barriers that are required to protect safe shutdown capability close under design air flow conditions.

5.d Controls are provided in the MCR to open and close the remotely operated dampers identified in Table 2.7.5.2-2.

5.e The remotely operated dampers and tornado dampers, identified in Table 2.7.5.2-1, as having an active safety function perform an active safety function to change position as indicated in the table.

6.a Controls are provided in the MCR to start and stop the ESFVS air handling units and filtration units identified in Table 2.7.5.2-2.

6.b The annulus emergency exhaust filtration unit fans identified in Table 2.7.5.2-1 start and the isolation dampers identified in Table 2.7.5.4-1 perform an active safety function to close upon receipt of an ECCS actuation signal.

6.c The Class 1E electrical room HVAC system air handling unit fans identified in Table 2.7.5.2-1 start after receiving an ECCS actuation signal.

6.d The safeguard component area HVAC system, emergency feedwater pump area HVAC system, and the safety related component area HVAC system air handling unit fans identified in Table 2.7.5.2-1 start after receiving a high temperature signal.

7. Alarms and displays identified in Table 2.7.5.2-2 are provided in the MCR.

8. Alarms, displays and controls identified in Table 2.7.5.2-2 are provided in the RSC.

2.7.5.2.2 Inspections, Tests, Analyses, and Acceptance Criteria

Table 2.7.5.2-3 describes the inspections, tests analyses, and associated acceptance criteria for the ESFVS. Table 2.7.3.5-5 describes the ITAAC for the ECWS piping that supplies cooling water to the ESFVS air handling unit cooling coils.

Table 2.7.5.2-1 Engineered Safety Features Ventilation System Equipment Characteristics (Sheet 1 of 10)

Equipment Name	Tag No.	ASME Code Section III Class	Seismic Category I	Remotely Operated Damper	Class 1E/ Qual. For Harsh Envir.	PSMS Control	Active Safety Function	Loss of Motive Power Position
Annulus Emergency Exhaust System								
Annulus Emergency Exhaust Filtration Units	VRS-MFU-001 A, B	—	Yes	—	—/No	—	None	—
Annulus Emergency Exhaust Filtration Unit Fans	VRS-MFN-001 A, B	—	Yes	—	Yes/No	ECCS Actuation	Start	—
Penetration-Area Exhaust Dampers	VRS-EHD-001 A, B	—	Yes	Yes	Yes/No	Fan start	Transfer Open	Closed
Safeguard Component Area Exhaust Dampers	VRS-EHD-002 A, B	—	Yes	Yes	Yes/No	Fan Start	Transfer Open	Closed
Annulus Emergency Exhaust Filtration Unit Outlet Dampers	VRS-EHD-003 A, B	—	Yes	Yes	Yes/No	Fan Start	Transfer Open	Closed
Tornado Damper	VRS-OTD-004 A, B	—	Yes	—	—/No	—	Transfer Closed (Tornado condition)	–
Ductwork	—	—	Yes	—	—/No	—	None	–

Table 2.7.5.2-1 Engineered Safety Features Ventilation System Equipment Characteristics (Sheet 2 of 10)

Equipment Name	Tag No.	ASME Code Section III Class	Seismic Category I	Remotely Operated Damper	Class 1E/ Qual. For Harsh Envir.	PSMS Control	Active Safety Function	Loss of Motive Power Position
Class 1E Electrical Room HVAC System								
Class 1E Electrical Room Air Handling Units	VRS-MAH-201 A, B, C, D	—	Yes	—	—/No	—	None	—
Class 1E Electrical Room Air Handling Unit Fans	VRS-MFN-201 A, B, C, D	—	Yes	—	Yes/No	ECCS Actuation	Start	—
Class 1E Electrical Room Air Handling Unit Cooling Coils	VRS-MCL-201 A B C D	—	Yes	—	—/No	—	None	—
Class 1E Electrical Room Air Handling Unit Electric Heating Coils	VRS-MEH-201 A B C D	—	Yes	—	Yes/No	ECCS Actuation	Energized	Deenergized
Class 1E Electrical Room Return Air Fans	VRS-MFN-202 A, B, C, D	—	Yes	—	Yes/No	ECCS Actuation	Start	—
Class 1E Battery Room Exhaust Fans	VRS-MFN-251 A,B,C,D	—	Yes	—	Yes/No	ECCS Actuation	Start	—
Class 1E Electrical Room Outside Air Intake Isolation Dampers	VRS-EHD-201 A,B,C,D	—	Yes	Yes	Yes/No	ECCS Actuation	Transfer Open	Closed

Table 2.7.5.2-1 Engineered Safety Features Ventilation System Equipment Characteristics (Sheet 3 of 10)

Equipment Name	Tag No.	ASME Code Section III Class	Seismic Category I	Remotely Operated Damper	Class 1E/ Qual. For Harsh Envir.	PSMS Control	Active Safety Function	Loss of Motive Power Position
Class 1E Electrical Room Air Handling Unit Outlet Dampers	VRS-EHD-202 A,B,C,D	—	Yes	Yes	Yes/No	Fan Start	Transfer Open	Closed
Class 1E Electrical Room Return Air Fan Inlet Dampers	VRS-EHD-203 A,B,C,D	—	Yes	Yes	Yes/No	Fan Start	Transfer Open	Closed
Class 1E Electrical Room Air Handling Unit Inlet Dampers	VRS-EHD-204 A,B,C,D	—	Yes	Yes	Yes/No	ECCS Actuation	Transfer Open	Closed
Class 1E Electrical Room Exhaust Line Isolation Dampers	VRS-AOD-205 A,B,C,D	—	Yes	Yes	Yes/No	ECCS Actuation	Transfer Closed	Closed
Class 1E Battery Room Exhaust Fan Inlet Dampers	VRS-EHD-251 A,B,C,D	—	Yes	Yes	Yes/No	Fan Start	Transfer Open	Closed
Class 1E Battery Room Exhaust Fan Outlet Dampers	VRS-EHD-252 A,B,C,D	—	Yes	Yes	Yes/No	Fan Start	Transfer Open	Closed
Tornado Dampers	VRS-OTD-206 A,B,C,D VRS-OTD-207A,B,C,D VRS-OTD-253 A,B,C,D	—	Yes	—	—/No	—	Transfer Closed (Tornado condition)	—
Ductwork	—	—	Yes	—	—/No	—	None	—
Class 1E Electrical Room Temperature	VRS-TS-210, 230, 250, 270	—	Yes	—	Yes/No	—	—	—

Table 2.7.5.2-1 Engineered Safety Features Ventilation System Equipment Characteristics (Sheet 4 of 10)

Equipment Name	Tag No.	ASME Code Section III Class	Seismic Category I	Remotely Operated Damper	Class 1E/ Qual. For Harsh Envir.	PSMS Control	Active Safety Function	Loss of Motive Power Position
Safeguard Component Area HVAC System								
Safeguard Component Area Air Handling Units	VRS-MAH-301 A, B, C, D	—	Yes	—	—/No	—	None	—
Safeguard Component Area Air Handling Unit Fans	VRS-MFN-301 A, B, C, D	—	Yes	—	Yes/No	High Temperature	Start	—
Safeguard Component Area Air Handling Unit Cooling Coils	VRS-MCL-301 A, B, C, D	—	Yes	—	—/No	—	None	—
Safeguard Component Area Air Handling Unit Electric Heating Coils	VRS-MEH-301 A,B,C,D	—	Yes	—	Yes/No	Remote Manual	Energized	Deenergized
Safeguard Component Area Air Handling Unit Inlet Dampers	VRS-MOD-301 A, B, C, D	—	Yes	Yes	Yes/No	Fan Start	Transfer Open	As is
Safeguard Component Area Air Handling Unit Outlet Dampers	VRS-MOD-302 A, B, C, D	—	Yes	Yes	Yes/No	Fan Start	Transfer Open	As is
Ductwork	—	—	Yes	—	—/No	—	None	—
Safeguard Component Area Temperature	VRS-TS-305, 306, 307, 315, 316, 317, 325,326, 327, 335, 336, 337	—	Yes	—	Yes/No	—	—	—

Table 2.7.5.2-1 Engineered Safety Features Ventilation System Equipment Characteristics (Sheet 5 of 10)

Equipment Name	Tag No.	ASME Code Section III Class	Seismic Category I	Remotely Operated Damper	Class 1E/ Qual. For Harsh Envir.	PSMS Control	Active Safety Function	Loss of Motive Power Position
Emergency Feedwater Pump Area HVAC System								
Emergency Feedwater Pump Area Air Handling Units	VRS-MAH-401 A, B, C, D	—	Yes	—	—/No	—	None	—
Emergency Feedwater Pump Area Air Handling Unit Fans	VRS-MFN-401 A, B, C, D	—	Yes	—	Yes/No	High Temperature	Start	—
Emergency Feedwater Pump Area Air Handling Unit Cooling Coils	VRS-MCL-401 A, B, C, D	—	Yes	—	—/No	—	None	—
Emergency Feedwater Pump Area Air Handling Unit Electric Heating Coils	VRS-MEH-401 A, B, C, D	—	Yes	—	Yes/No	Remote Manual	Energized	Deneregized
Tornado Damper	VRS-OTD-403A,D, -404A,D	—	Yes	—	–/No	—	Transfer Closed	—
Ductwork	—	—	Yes	—	—/No	—	None	—
Emergency Feedwater Pump Area Temperature	VRS-TS-401, 405, 406, 411, 415, 416, 421, 425, 426, 431, 435, 436	—	Yes	—	Yes/No	—	—	—

Table 2.7.5.2-1 Engineered Safety Features Ventilation System Equipment Characteristics (Sheet 6 of 10)

Equipment Name	Tag No.	ASME Code Section III Class	Seismic Category I	Remotely Operated Damper	Class 1E/ Qual. For Harsh Envir.	PSMS Control	Active Safety Function	Loss of Motive Power Position
Safety Related Component Area HVAC System								
Component Cooling Water Pump Area Air Handling Units	VRS-MAH-501 A, B, C, D	—	Yes	—	—/No	—	None	—
Component Cooling Water Pump Area Air Handling Unit Fans	VRS-MFN-501 A, B, C, D	—	Yes	—	Yes/No	High Temperature	Start	—
Component Cooling Water Pump Area Air Handling Unit Cooling Coils	VRS-MCL-501 A, B, C, D	—	Yes	—	—/No	—	None	—
Component Cooling Water Pump Area Air Handling Unit Electric Heating Coils	VRS-MEH-501 A, B,C D	—	Yes	—	Yes/No	Remote Manual	Energized	Deenergized
Essential Chiller Unit Area Air Handling Units	VRS-MAH-511 A, B, C, D	—	Yes	—	—/No	—	None	—
Essential Chiller Unit Area Air Handling Unit Fans	VRS-MFN-511 A, B, C, D	—	Yes	—	Yes/No	High Temperature	Start	—

Table 2.7.5.2-1 Engineered Safety Features Ventilation System Equipment Characteristics (Sheet 7 of 10)

Equipment Name	Tag No.	ASME Code Section III Class	Seismic Category I	Remotely Operated Damper	Class 1E/ Qual. For Harsh Envir.	PSMS Control	Active Safety Function	Loss of Motive Power Position
Essential Chiller Unit Area Air Handling Unit Cooling Coils	VRS-MCL-511 A, B, C, D	—	Yes	—	—/No	—	None	—
Essential Chiller Unit Area Air Handling Unit Electric Heating Coils	VRS-MEH-511 A, B, C, D	—	Yes	—	Yes/No	Remote Manual	Energized	Deenergized
Charging Pump Area Air Handling Units	VRS-MAH-531 A, B	—	Yes	—	—/No	—	None	—
Charging Pump Area Air Handling Unit Fans	VRS-MFN-531 A, B	—	Yes	—	Yes/No	High Temperature	Start	—
Charging Pump Area Air Handling Unit Cooling Coils	VRS-MCL-531 A, B	—	Yes	—	—/No	—	None	—
Charging Pump Area Air Handling Unit Electric Heating Coils	VRS-MEH-531 A, B	—	Yes	—	Yes/No	Remote Manual	Energized	Deenergized
Annulus Emergency Exhaust Filtration Unit Area Air Handling Units	VRS-MAH-541 A, B	—	Yes	—	—/No	—	None	—

Table 2.7.5.2-1 Engineered Safety Features Ventilation System Equipment Characteristics (Sheet 8 of 10)

Equipment Name	Tag No.	ASME Code Section III Class	Seismic Category I	Remotely Operated Damper	Class 1E/ Qual. For Harsh Envir.	PSMS Control	Active Safety Function	Loss of Motive Power Position
Annulus Emergency Exhaust Filtration Unit Area Air Handling Unit Fans	VRS-MFN-541 A, B	—	Yes	—	Yes/No	High Temperature	Start	—
Annulus Emergency Exhaust Filtration Unit Area Air Handling Unit Cooling Coils	VRS-MCL-541 A, B, C, D	—	Yes	—	—/No	—	None	—
Annulus Emergency Exhaust Filtration Unit Area Air Handling Unit Electric Heating Coils	VRS-MEH-541 A, B, C, D	—	Yes	—	Yes/No	Remote Manual	Energized	Deenergized
Penetration Area Air Handling Units	VRS-MAH-551 A, B, C, D	—	Yes	—	—/No	—	None	—
Penetration Area Air Handling Unit Fans	VRS-MFN-551 A, B, C, D	—	Yes	—	Yes/No	High Temperature	Start	—
Penetration Area Air Handling Unit Cooling Coils	VRS-MCL-551 A, B, C, D	—	Yes	—	—/No	—	None	—

Table 2.7.5.2-1 Engineered Safety Features Ventilation System Equipment Characteristics (Sheet 9 of 10)

Equipment Name	Tag No.	ASME Code Section III Class	Seismic Category I	Remotely Operated Damper	Class 1E/ Qual. For Harsh Envir.	PSMS Control	Active Safety Function	Loss of Motive Power Position
Penetration Area Air Handling Unit Electric Heating Coils	VRS-MEH-551 A,B,C,D	—	Yes	—	Yes/No	Remote Manual	Energized	Deenergized
Spent Fuel Pit Pump Area Air Handling Units	VRS-MAH-561 A, B	—	Yes	—	—/No	—	None	—
Spent Fuel Pit Pump Area Air Handling Unit Fans	VRS-MFN-561 A, B	—	Yes	—	Yes/No	High Temperature	Start	—
Spent Fuel Pit Pump Area Air Handling Unit Cooling Coils	VRS-MCL-561 A, B	—	Yes	—	—/No	—	None	—
Spent Fuel Pit Pump Area Air Handling Unit Electric Heating Coils	VRS-MEH-561 A,B,C,D	—	Yes	—	Yes/No	Remote Manual	Energized	Deenergized
Ductwork	—	—	Yes	—	—/No	—	None	—
Component Cooling Water Pump Area Temperature	VRS-TS-501, 504, 505, 511, 514, 515, 521, 524, 525, 531, 534, 535	—	Yes	—	Yes/No	—	—	—

Table 2.7.5.2-1 Engineered Safety Features Ventilation System Equipment Characteristics (Sheet 10 of 10)

Equipment Name	Tag No.	ASME Code Section III Class	Seismic Category I	Remotely Operated Damper	Class 1E/ Qual. For Harsh Envir.	PSMS Control	Active Safety Function	Loss of Motive Power Position
Essential Chiller Unit Area Temperature	VRS-TS-541, 544, 545, 551, 554, 555, 561, 564, 565, 571, 574, 575	—	Yes	—	Yes/No	—	—	—
Charging Pump Area Temperature	VRS-TS-581, 584, 585, 591, 594, 595	—	Yes	—	Yes/No	—	—	—
Annulus Emergency Exhaust Filtration Unit Area Temperature	VRS-TS-601, 604, 605, 611, 614, 615	—	Yes	—	Yes/No	—	—	—
Penetration Area Temperature	VRS-TS-621, 624, 625, 631, 634, 635, 641, 644, 645, 651, 654, 655	—	Yes	—	Yes/No	—	—	—
Spent Fuel Pit Pump Area Temperature	VRS-TS-661, 664, 665, 671, 674, 675	—	Yes	—	Yes/No	—	—	—

NOTE:
Dash (-) indicates not applicable

Table 2.7.5.2-2 Engineered Safety Features Ventilation System Equipment Alarms, Displays and Control Functions (Sheet 1 of 4)

Equipment/Instrument Name	MCR/RSC Alarm	MCR Display	MCR/RSC Control Function	RSC Display
Annulus Emergency Exhaust System				
Annulus Emergency Exhaust Filtration Unit Fans (VRS-MFN-001 A, B)	No	Yes	Yes	Yes
Penetration Area Exhaust Dampers (VRS-EHD-001 A, B)	No	Yes	No	Yes
Safeguard Component Area Exhaust Dampers (VRS-EHD-002 A, B)	No	Yes	No	Yes
Annulus Emergency Exhaust Filtration Unit Outlet Dampers (VRS-EHD-003 A, B)	No	Yes	No	Yes
Class 1E Electrical Room HVAC System				
Class 1E Electrical Room Air Handling Unit Fans (VRS-MFN-201 A, B, C, D)	No	Yes	Yes	Yes
Class 1E Electrical Room Return Air Fans (VRS-MFN-202 A, B, C, D)	No	Yes	Yes	Yes
Class 1E Battery Room Exhaust Fans (VRS-MFN-251 A, B, C, D)	No	Yes	Yes	Yes
Class 1E Electrical Room Outside Air Intake Isolation Dampers (VRS-EHD-201 A, B, C, D)	No	Yes	No	Yes
Class 1E Electrical Room Air Handling Unit Outlet Dampers (VRS-EHD-202 A, B, C, D)	No	Yes	No	Yes
Class 1E Electrical Room Return Air Fan Inlet Dampers (VRS-EHD-203 A, B, C, D)	No	Yes	No	Yes

Table 2.7.5.2-2 Engineered Safety Features Ventilation System Equipment Alarms, Displays and Control Functions (Sheet 2 of 4)

Equipment/Instrument Name	MCR/RSC Alarm	MCR Display	MCR/RSC Control Function	RSC Display
Class 1E Electrical Room Air Handling Unit Inlet Dampers (VRS-EHD-204 A, B, C, D)	No	Yes	Yes	Yes
Class 1E Electrical Room Exhaust Line Isolation Dampers (VRS-AOD-205 A, B, C, D)	No	Yes	Yes	Yes
Class 1E Battery Room Exhaust Fan Inlet Dampers (VRS-EHD-251 A, B, C, D)	No	Yes	No	Yes
Class 1E Battery Room Exhaust Fan Outlet Dampers (VRS-EHD-252 A, B, C, D)	No	Yes	No	Yes
Class 1E Electrical Room Temperature (VRS-TCA-210, 230, 250, 270)	Yes	No	No	No
Safeguard Component Area HVAC System				
Safeguard Component Area Air Handling Unit Fans (VRS-MFN-301 A, B, C, D)	No	Yes	Yes	Yes
Safeguard Component Area Air Handling Unit Inlet Dampers (VRS-MOD-301 A, B, C, D)	No	Yes	No	Yes
Safeguard Component Area Air Handling Unit Outlet Dampers (VRS-MOD-302 A, B, C, D)	No	Yes	No	Yes

Table 2.7.5.2-2 Engineered Safety Features Ventilation System Equipment Alarms, Displays and Control Functions (Sheet 3 of 4)

Equipment/Instrument Name	MCR/RSC Alarm	MCR Display	MCR/RSC Control Function	RSC Display
Safeguard Component Area Temperature (VRS-TCA-305, 315, 325, 335)	Yes	No	No	No
Emergency Feedwater Pump Area HVAC System				
Emergency Feedwater Pump Area Air Handling Unit Fans (VRS-MFN-401 A, B, C, D)	No	Yes	Yes	Yes
Emergency Feedwater Pump Area Temperature (VRS-TCA-401, 411, 421, 431)	Yes	No	No	No
Safety Related Component Area HVAC System				
Component Cooling Water Pump Area Air Handling Unit Fans (VRS-MFN-501 A, B, C, D)	No	Yes	Yes	Yes
Essential Chiller Unit Area Air Handling Unit Fans (VRS-MFN-511 A, B, C, D)	No	Yes	Yes	Yes
Charging Pump Area Air Handling Unit Fans (VRS-MFN-531 A, B)	No	Yes	Yes	Yes
Annulus Emergency Exhaust Filtration Unit Area Air Handling Unit Fans (VRS-MFN-541 A, B)	No	Yes	Yes	Yes
Penetration Area Air Handling Unit Fans (VRS-MFN-551 A, B, C, D)	No	Yes	Yes	Yes

Table 2.7.5.2-2 Engineered Safety Features Ventilation System Equipment Alarms, Displays and Control Functions (Sheet 4 of 4)

Equipment/Instrument Name	MCR/RSC Alarm	MCR Display	MCR/RSC Control Function	RSC Display
Component Cooling Water Pump Area Temperature (VRS-TCA-501, 511, 521, 531)	Yes	No	No	No
Essential Chiller Unit Area Temperature (VRS-TCA-541, 551, 561, 571)	Yes	No	No	No
Charging Pump Area Temperature (VRS-TCA-581, 591)	Yes	No	No	No
Annulus Emergency Exhaust Filtration Unit Area Temperature (VRS-TCA-601, 611)	Yes	No	No	No
Penetration Area Temperature (VRS-TCA-621, 631, 641, 651)	Yes	No	No	No
Spent Fuel Pit Pump Area Temperature (VRS-TCA-661,671)	Yes	No	No	No

Table 2.7.5.2-3 Engineered Safety Features Ventilation System Inspections, Tests, Analyses, and Acceptance Criteria (Sheet 1 of 7)

Design Commitment	Inspections, Tests, Analyses	Acceptance Criteria
1.a The functional arrangement of the ESFVS is as described in the Design Description of Subsection 2.7.5.2.1 and as shown in Figures 2.7.5.2-1 through 2.7.5.2-5.	1.a Inspection of the as-built ESFVS will be performed.	1.a The as-built ESFVS conforms to the functional arrangement as described in the Design Description of Subsection 2.7.5.2.1 and as shown in Figures 2.7.5.2-1 through 2.7.5.2-5.
1.b Each mechanical division of the annulus emergency exhaust system filtration units is physically separated from the other divisions of the annulus emergency exhaust system so as not to preclude accomplishment of the safety function.	1.b Inspections and analysis of the as-built annulus emergency exhaust system will be performed.	1.b A report exists and concludes that each mechanical division of the as-built annulus emergency filtration units is physically separated from other mechanical divisions of the system by spatial separation, barriers, or enclosures so as to assure that the functions of the safety-related systems are maintained.
1.c Each mechanical division of the Class 1E electrical room air handling units, Class 1E electrical room return air fans and Class 1E battery room exhaust fans is physically separated from the other divisions of the Class 1 E electrical room HVAC system so as not to preclude accomplishment of the safety function.	1.c Inspections and analysis of the as-built Class 1E electrical room HVAC system will be performed.	1.c A report exists and concludes that each mechanical division of the as-built Class 1E electrical room air handling units, Class 1E electrical room return air fans and Class 1E battery room exhaust fans is physically separated from other mechanical divisions of the system by spatial separation, barriers, or enclosures so as to assure that the functions of the safety-related systems are maintained.
1.d Each mechanical division of the safeguard component area air handling units is physically separated from the other divisions of the safeguard component area HVAC system so as not to preclude accomplishment of the safety function.	1.d Inspections and analysis of the as-built safeguard component area HVAC system will be performed.	1.d A report exists and concludes that each mechanical division of the as-built safeguard component area air handling units is physically separated from other mechanical divisions of the system by spatial separation, barriers, or enclosures so as to assure that the functions of the safety-related systems are maintained.

Table 2.7.5.2-3 Engineered Safety Features Ventilation System Inspections, Tests, Analyses, and Acceptance Criteria (Sheet 2 of 7)

Design Commitment	Inspections, Tests, Analyses	Acceptance Criteria
1.e Each mechanical division of the emergency feedwater pump area air handling units is physically separated from the other divisions of the emergency feedwater pump area HVAC system so as not to preclude accomplishment of the safety function.	1.e Inspections and analysis of the as-built emergency feedwater pump area HVAC system will be performed.	1.e A report exists and concludes that each mechanical division of the as-built emergency feedwater pump area air handling units is physically separated from other mechanical divisions of the system by spatial separation, barriers, or enclosures so as to assure that the functions of the safety-related systems are maintained.
1.f Each mechanical division of the safety-related component area air handling units is physically separated from the other divisions of the safety-related component area HVAC system so as not to preclude accomplishment of the safety function.	1.f Inspections and analysis of the as-built safety-related component area HVAC system will be performed.	1.f A report exists and concludes that each mechanical division of the as-built safety-related component area air handling units is physically separated from other mechanical divisions of the system by spatial separation, barriers, or enclosures so as to assure that the functions of the safety-related systems are maintained.
2. The seismic Category I equipment, identified in Table 2.7.5.2-1, can withstand seismic design basis loads without loss of safety function.	2.i Inspections will be performed to verify that the as-built seismic Category I equipment identified in Table 2.7.5.2-1 is located in a seismic Category I structure.	2.i The as-built seismic Category I equipment identified in Table 2.7.5.2-1 is located in a seismic Category I structure.
	2.ii Type tests, analyses, or a combination of type tests and analyses of seismic Category I equipment identified in Table 2.7.5.2-1 will be performed using analytical assumptions, or will be performed under conditions, which bound the seismic design basis requirements.	2.ii A report exists and concludes that the seismic Category I equipment identified in Table 2.7.5.2-1 can withstand seismic design basis loads without loss of safety function.

Table 2.7.5.2-3 Engineered Safety Features Ventilation System Inspections, Tests, Analyses, and Acceptance Criteria (Sheet 3 of 7)

Design Commitment	Inspections, Tests, Analyses	Acceptance Criteria
	2.iii Inspections and analyses will be performed to verify that on the as-built seismic Category I equipment identified in Table 2.7.5.2-1, including anchorages, is seismically bounded by the tested or analyzed conditions.	2.iii A report exists and concludes that the as-built seismic Category I equipment identified in Table 2.7.5.2-1, including anchorages, is seismically bounded by the tested or analyzed conditions.
3.a Class 1E equipment, identified in Table 2.7.5.2-1, is powered from its respective Class 1E division.	3.a A test will be performed on each division of the as-built Class 1E equipment identified in Table 2.7.5.2-1 by providing a simulated test signal only in the Class 1E division under test.	3.a The simulated test signal exists at the as-built Class 1E equipment identified in Table 2.7.5.2-1, under test.
3.b. Separation is provided between redundant divisions of ESFVS Class 1E cables, and between Class 1E cables and non-Class 1E cables.	3.b Inspections of the as-built Class 1E divisional cables will be performed.	3.b Physical separation or electrical isolation is provided in accordance with R.G 1.75, between the as-built cables of redundant ESFVS Class 1E cables and between Class 1E cables and non-Class 1E cables.
4.a The annulus emergency exhaust system provides filter efficiency and negative pressure used in the safety analysis.	4.a.i Type tests, tests and analyses will be performed to verify that the filter efficiencies for the as-built annulus emergency exhaust system in both divisions meet or exceed the design specifications. .	4.a.i A report exists and concludes that the filters of the as-built annulus emergency exhaust system meet or exceed a filter efficiency of 99% in each division.
	4.a.ii A test of the as-built annulus emergency exhaust system will be performed on both divisions.	4.a.ii The as-built annulus emergency exhaust system draws down all four penetration areas and all four safeguard component areas to less than or equal to -0.25 inches w.g. relative to adjacent areas within 240 seconds for each division.

Table 2.7.5.2-3 Engineered Safety Features Ventilation System Inspections, Tests, Analyses, and Acceptance Criteria (Sheet 4 of 7)

Design Commitment	Inspections, Tests, Analyses	Acceptance Criteria
4.b The Class 1E electrical room HVAC system provides conditioned air to maintain area temperature within design limits in rooms described in Section 2.7.5.2.1.2 during normal operations, abnormal and accident conditions of the plant.	4.b Tests and analyses of the as-built Class 1E electrical room HVAC system will be performed for all four divisions.	4.b A report exists and concludes that the as-built Class 1E electrical room HVAC system is capable of providing conditioned air to maintain area temperature within design limits in the rooms described in Section 2.7.5.2.1.2 during normal operations, abnormal and accident conditions of the plant.
4.c The Class 1E electrical room HVAC system provides battery room ventilation to maintain hydrogen concentration within the design limit during normal operations, abnormal and accident conditions of the plant.	4.c Tests and analyses of the as-built Class 1E electrical room HVAC system will be performed for all four divisions.	4.c A report exists and concludes that the as-built Class 1E electrical room HVAC system is capable of providing battery room ventilation to maintain hydrogen concentration below 1% by battery room volume during normal operations, abnormal and accident conditions of the plant.
4.d The safeguard component area HVAC system provides conditioned air to maintain area temperature within design limits in the safeguard component areas when the respective equipment is operating during abnormal and accident conditions of the plant.	4.d Tests and analyses of the as-built safeguard component area HVAC system will be performed for all four divisions.	4.d A report exists and concludes that the as-built safeguard component area HVAC system is capable of providing conditioned air to maintain area temperature within design limits in the safeguard component areas when the respective equipment is operating during abnormal and accident conditions of the plant.
4.e The emergency feedwater pump area HVAC system provides conditioned air to maintain area temperature within design limits in the emergency feedwater pump areas when the respective equipment is operating during abnormal and accident conditions of the plant.	4.e Tests and analyses of the as-built emergency feedwater pump area HVAC system will be performed for all four divisions.	4.e A report exists and concludes that the as-built emergency feedwater pump area HVAC system is capable of providing conditioned air to maintain area temperature within design limits in the emergency feedwater pump areas when the respective equipment is operating during abnormal and accident conditions of the plant.

Table 2.7.5.2-3 Engineered Safety Features Ventilation System Inspections, Tests, Analyses, and Acceptance Criteria (Sheet 5 of 7)

Design Commitment	Inspections, Tests, Analyses	Acceptance Criteria
4.f The safety-related component area HVAC system provides conditioned air to maintain area temperature within design limits in each individual safety-related component area, when the respective equipment is operating during abnormal and accident conditions of the plant.	4.f Tests and analyses of the as-built safety-related component area HVAC system will be performed for each safety-related component area.	4.f A report exists and concludes that the as-built safety-related component area HVAC system is capable of providing conditioned air to maintain area temperature within design limits in each individual safety-related component area, when the respective equipment is operating during abnormal and accident conditions of the plant.
5.a The remotely operated dampers, identified in Table 2.7.5.2-1 as having PSMS control, perform an active safety function after receiving a signal from PSMS.	5.a Tests will be performed on the as-built remotely operated dampers identified in Table 2.7.5.2-1 as having PSMS control using simulated signals.	5.a The as-built remotely operated dampers identified in Table 2.7.5.2-1 as having PSMS control perform the active safety function identified in the table after receiving a simulated signal.
5.b After loss of motive power, the remotely operated dampers, identified in Table 2.7.5.2-1, assume the indicated loss of motive power position.	5.b Tests of the as-built remotely operated dampers identified in Table 2.7.5.2-1 will be performed under the conditions of loss of motive power.	5.b Upon loss of motive power, each as-built remotely operated damper identified in Table 2.7.5.2-1 assumes the indicated loss of motive power position.
5.c The fire dampers in the ductwork of the ESFVS that penetrates the fire barriers that are required to protect safe shutdown capability close under design air flow conditions.	5.c Type tests, tests, a combination of type tests and analyses, or a combination of tests and analyses of the fire dampers will be performed under the design air flow conditions or conditions which bound the design air flow conditions.	5.c A report exists and concludes that the fire dampers in the ductwork of the ESFVS that penetrates the fire barriers that are required to protect safe shutdown capability close under the design air flow conditions or conditions which bound design air flow conditions.
5.d Controls are provided in the MCR to open and close the remotely operated dampers identified in Table 2.7.5.2-2.	5.d Tests will be performed on the as-built remotely operated dampers identified in Table 2.7.5.2-2 using controls in the as-built MCR.	5.d Controls in the as-built MCR open and close the as-built remotely operated dampers identified in Table 2.7.5.2-2.

Table 2.7.5.2-3 Engineered Safety Features Ventilation System Inspections, Tests, Analyses, and Acceptance Criteria (Sheet 6 of 7)

Design Commitment	Inspections, Tests, Analyses	Acceptance Criteria
5.e The remotely operated dampers and tornado dampers, identified in Table 2.7.5.2-1, as having an active safety function perform an active safety function to change position as indicated in the table.	5.e.i Tests of the as-built remotely operated dampers identified in Table 2.7.5.2-1 as having an active safety function will be performed under preoperational flow and differential pressure test conditions.	5.e.i Each as-built remotely operated damper changes position as identified in Table 2.7.5.2-1 as having an active safety function under preoperational test conditions.
	5.e.ii Tests of the as-built tornado dampers identified in Table 2.7.5.2-1 as having an active safety function will be performed under preoperational test conditions.	5.e.ii Each as-built tornado damper changes position as identified in Table 2.7.5.2-1 as having an active safety function under preoperational test conditions.
6.a Controls are provided in the MCR to start and stop the ESFVS air handling units and filtration units identified in Table 2.7.5.2-2.	6.a Tests will be performed on the as-built air handling units and filtration units identified in Table 2.7.5.2-2 using controls in the as-built MCR.	6.a Controls in the as-built MCR start and stop the as-built air handling units and filtration units identified in Table 2.7.5.2-2.
6.b The annulus emergency exhaust filtration unit fans identified in Table 2.7.5.2-1 start and the isolation dampers identified in Table 2.7.5.4-1 perform an active safety function to close upon receipt of an ECCS actuation signal.	6.b Tests of the as-built annulus emergency exhaust filtration unit fans identified in Table 2.7.5.2-1 and isolation damper identified in Table 2.7.5.4-1 will be performed using a simulated signal.	6.b The as-built annulus emergency exhaust filtration unit fans identified in Table 2.7.5.2-1 start and each of the as-built isolation dampers identified in Table 2.7.5.4-1 close upon receipt of a simulated ECCS actuation signal.
6.c The Class 1E electrical room HVAC system air handling unit fans identified in Table 2.7.5.2-1 start after receiving an ECCS actuation signal.	6.c Tests of the as-built Class 1E electrical room HVAC system air handling unit fans identified in Table 2.7.5.2-1 will be performed using a simulated signal.	6.c The as-built Class 1E electrical room HVAC system air handling unit fans identified in Table 2.7.5.2-1 start after receiving a simulated ECCS actuation signal.

Table 2.7.5.2-3 Engineered Safety Features Ventilation System Inspections, Tests, Analyses, and Acceptance Criteria (Sheet 7 of 7)

Design Commitment	Inspections, Tests, Analyses	Acceptance Criteria
6.d The safeguard component area HVAC system, emergency feedwater pump area HVAC system, and the safety related component area HVAC system air handling unit fans identified in Table 2.7.5.2-1 start after receiving a high temperature signal.	6.d Tests of the as-built safeguard component area HVAC system, emergency feedwater pump area HVAC system, and the safety related component area HVAC system air handling unit fans identified in Table 2.7.5.2-1 will be performed using a simulated signal.	6.d The as-built safeguard component area HVAC system, emergency feedwater pump area HVAC system, and the safety related component area HVAC system air handling unit fans identified in Table 2.7.5.2-1 start after receiving a simulated high temperature signal.
7. Alarms and displays identified in Table 2.7.5.2-2 are provided in the MCR.	7. Inspection will be performed for retrievability of the alarms and displays identified in Table 2.7.5.2-2 in the as-built MCR.	7. Alarms and displays identified in Table 2.7.5.2-2 can be retrieved in the as-built MCR.
8. Alarms, displays and controls identified in Table 2.7.5.2-2 are provided in the RSC.	8.i Inspection will be performed for retrievability of the alarms and displays identified in Table 2.7.5.2-2 in the as-built RSC.	8.i Alarms, and displays identified in Table 2.7.5.2-2 can be retrieved in the as-built RSC.
	8.ii Tests of the as-built RSC control functions identified in Table 2.7.5.2-2 will be performed.	8.ii Controls in the as-built RSC operate the as-built equipment identified in Table 2.7.5.2-2 with an RSC control function

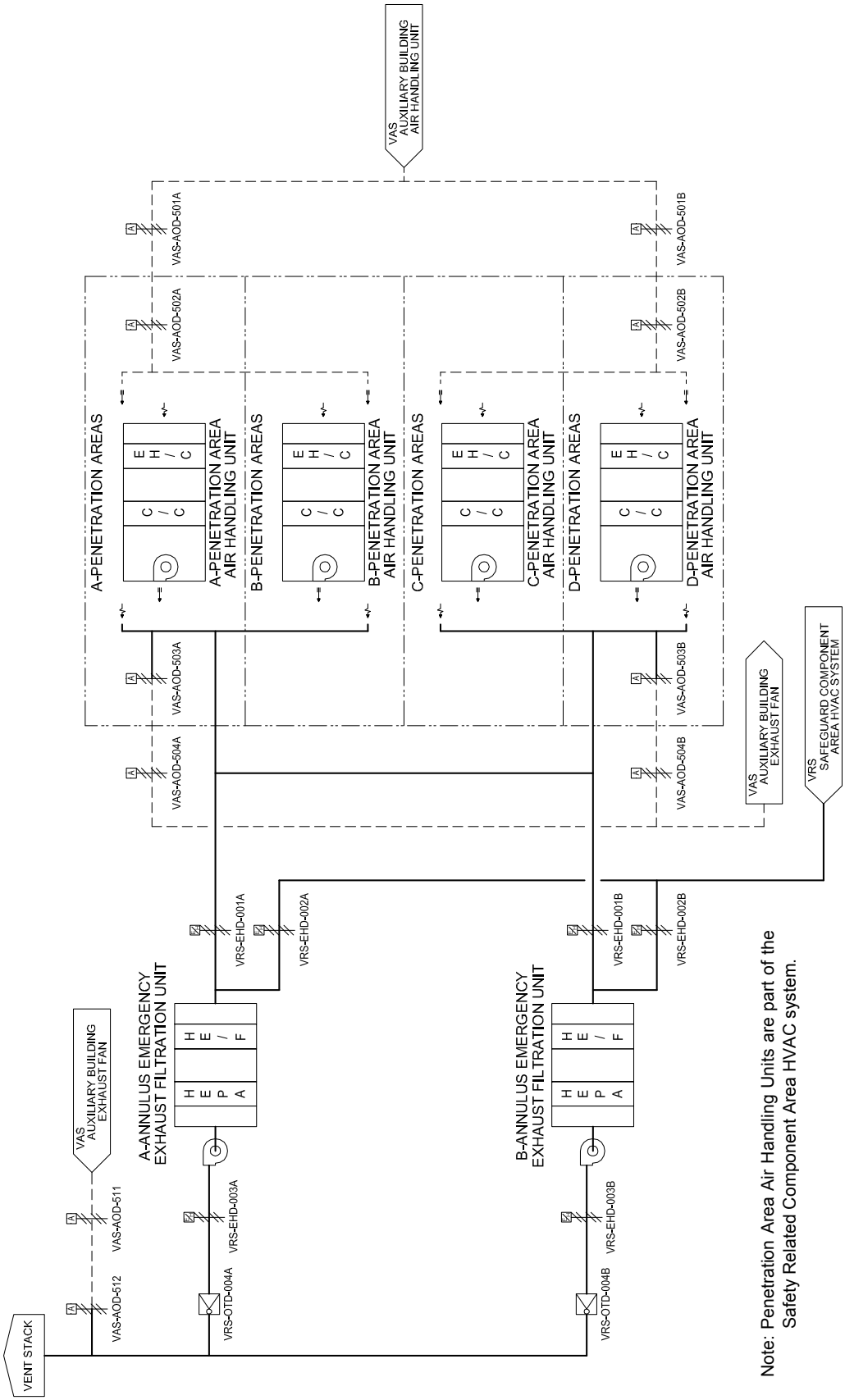

Figure 2.7.5.2-1 Annulus Emergency Exhaust System

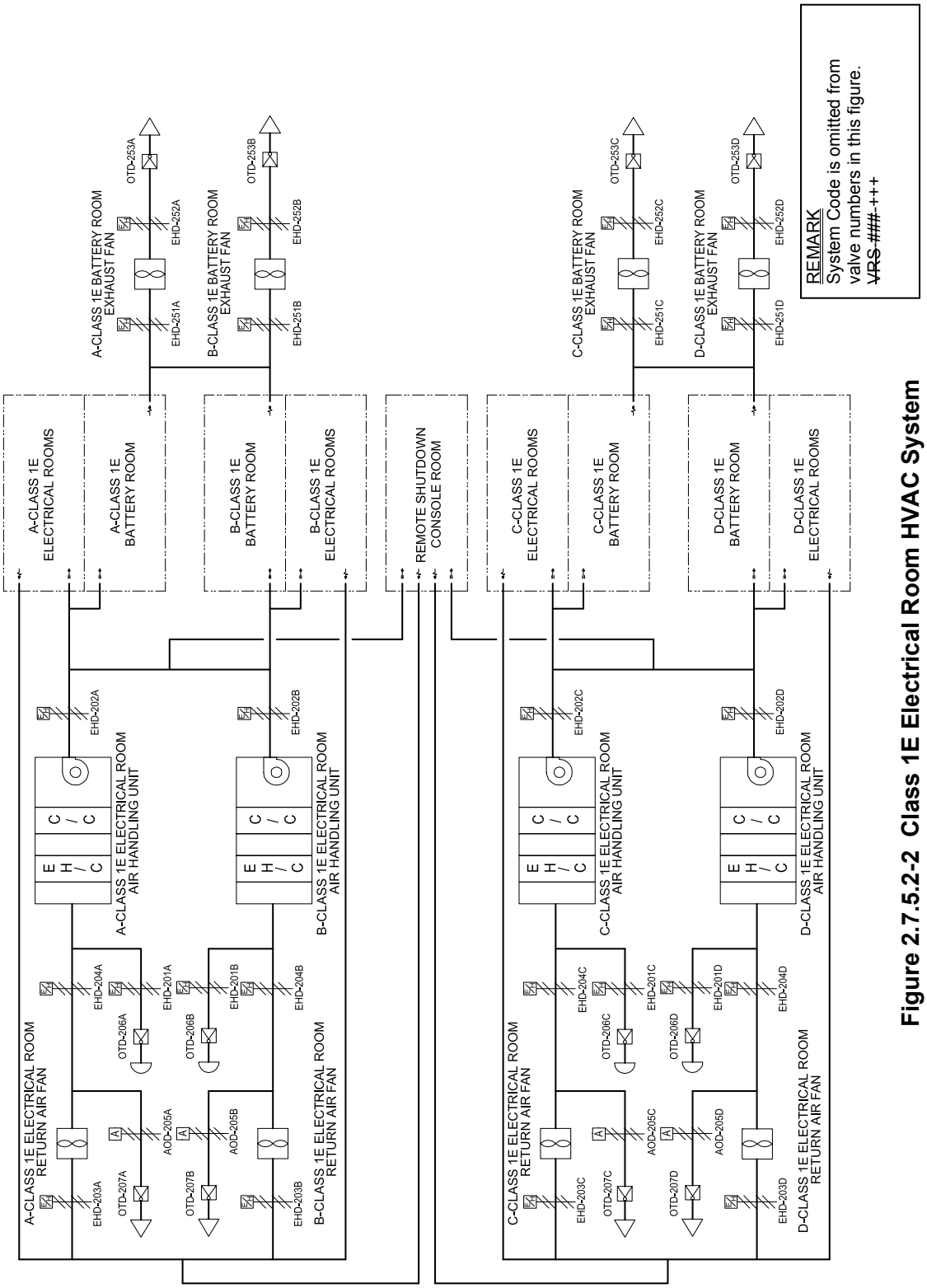

Figure 2.7.5.2-2 Class 1E Electrical Room HVAC System

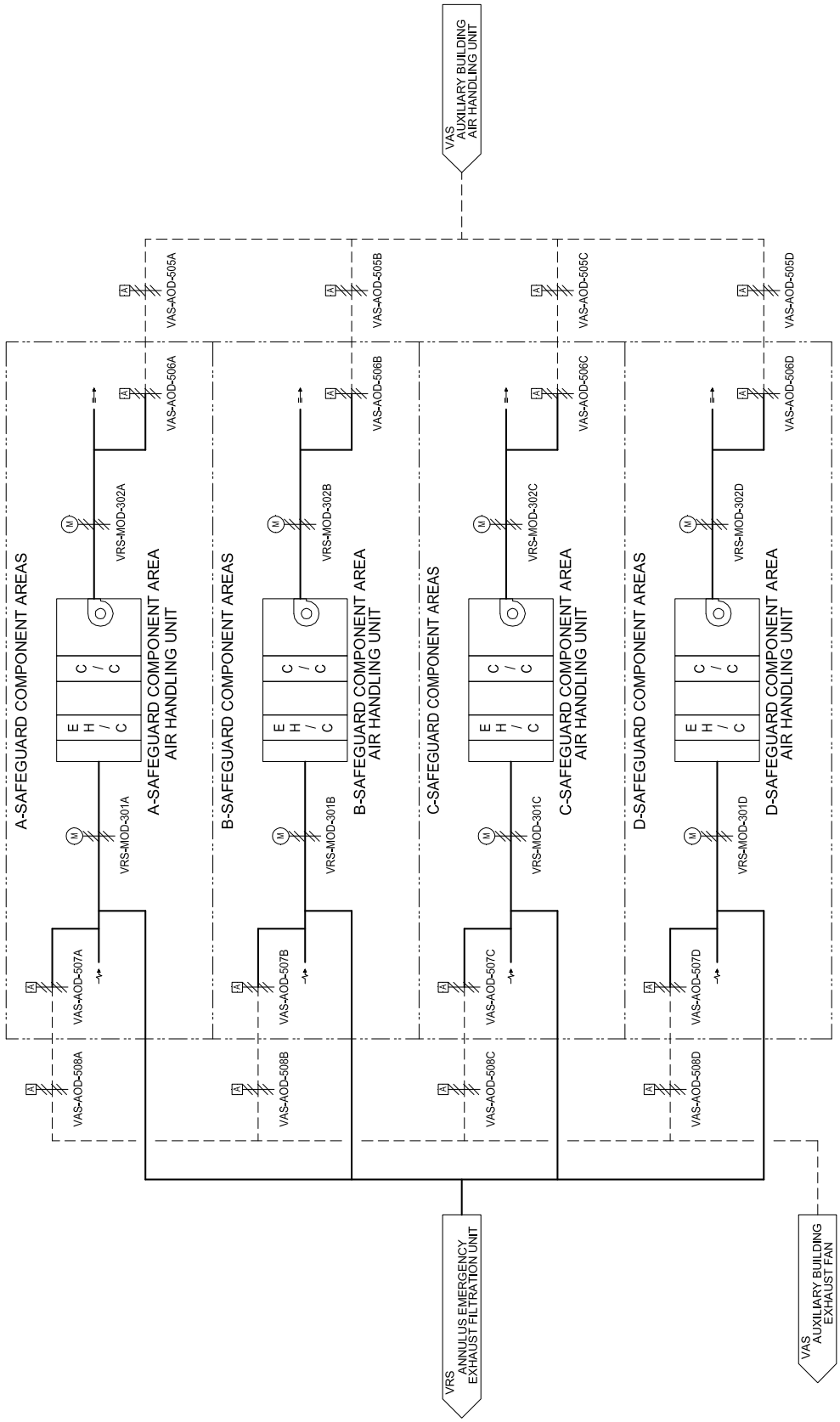

Figure 2.7.5.2-3 Safeguard Component Area HVAC System

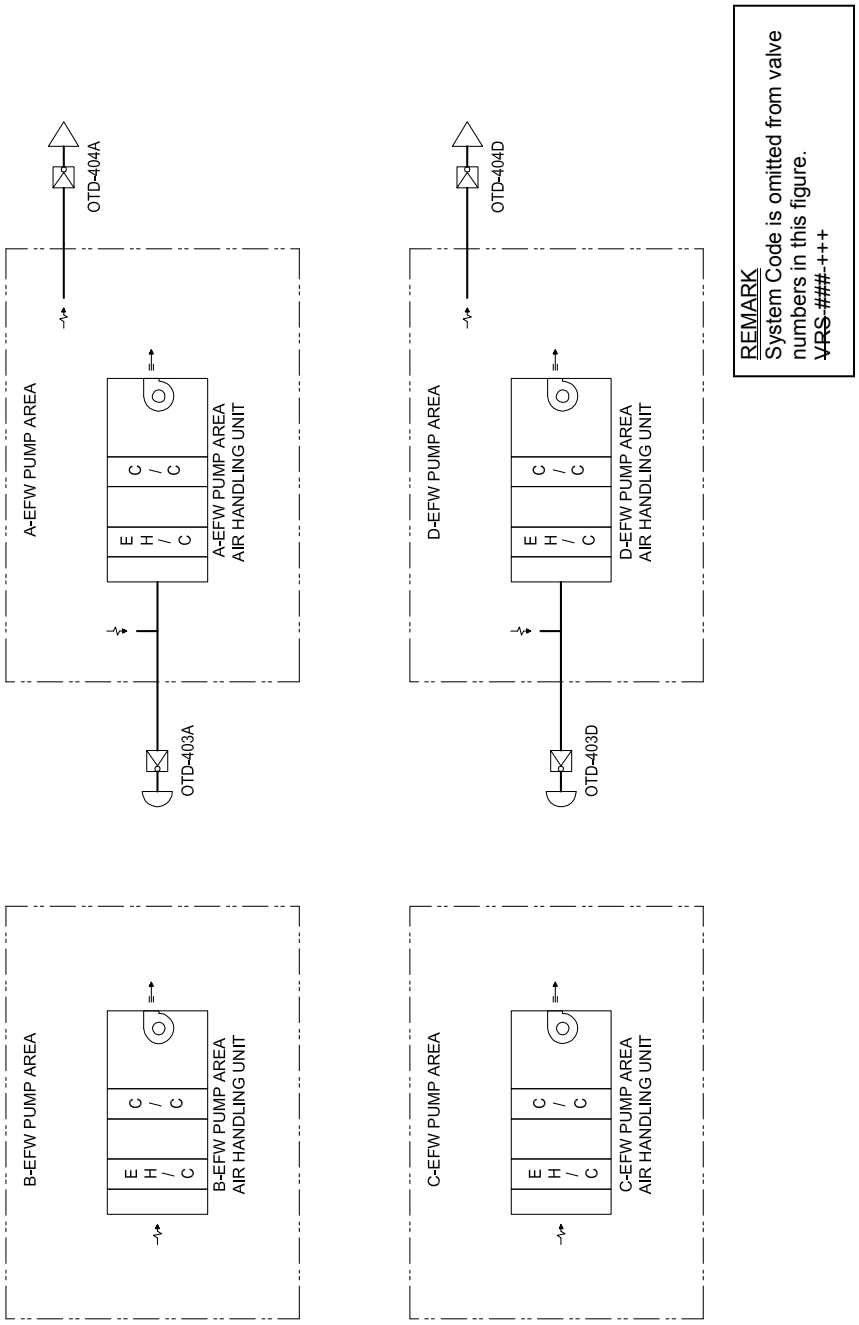

REMARK
System Code is omitted from valve numbers in this figure.
~~VRS ###~~-+++

Figure 2.7.5.2-4 Emergency Feedwater Pump Area HVAC System

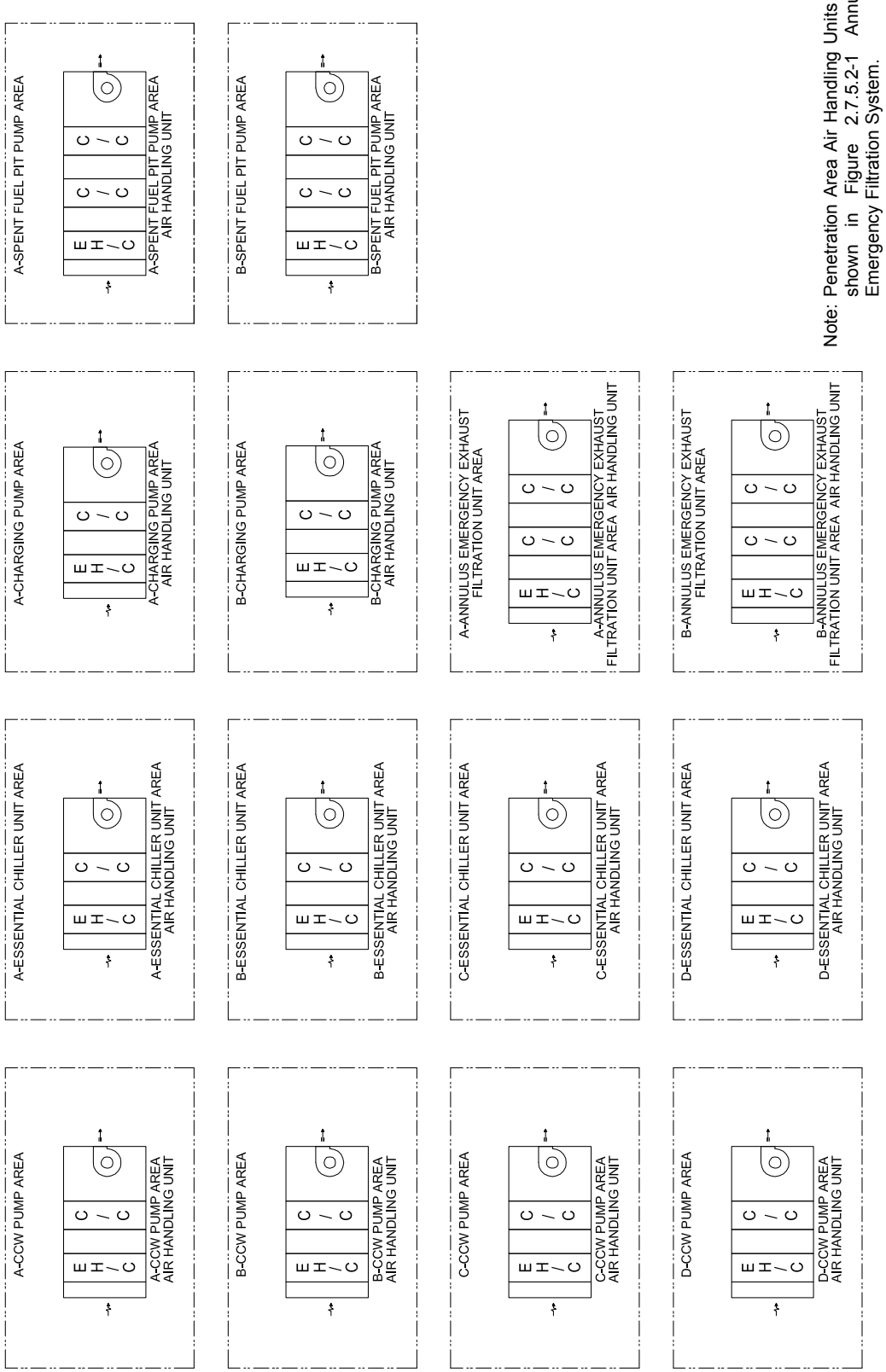

Note: Penetration Area Air Handling Units are shown in Figure 2.7.5.2-1 Annulus Emergency Filtration System.

Figure 2.7.5.2-5 Safety Related Component Area HVAC System

2.7.5.3 Containment Ventilation System (CVVS)

2.7.5.3.1 Design Description

The CVVS controls and maintains the temperature within the containment at a level suitable for plant equipment operations.

The CVVS includes:

- Containment purge system
- Containment fan cooler system
- Control rod drive mechanism (CRDM) cooling system
- Reactor cavity cooling system

2.7.5.3.1.1 Containment Purge System

The containment purge system maintains concentrations of radioactivity in the containment atmosphere to allow access during maintenance and inspection activities. The containment purge system has a safety function to support the containment isolation function as described in Subsection 2.11.2. With the exception of the containment isolation valves, the containment purge system is a non safety-related system.

The major components of the containment purge system are located in the reactor building and auxiliary building. The containment purge system consists of the containment low volume purge system and the containment high volume purge system. The containment low volume purge system consists of two containment low volume purge air handling units and two exhaust filtration units. The containment high volume purge system consists of a containment high volume purge air handling unit and an exhaust filtration unit.

The high volume purge exhaust airflow passes through a HEPA filter by an exhaust fan, prior to being discharged to the atmosphere through the vent stack.

2.7.5.3.1.2 Containment Fan Cooler System

The containment fan cooler system maintains containment air temperature below 120°F during normal operation of the plant. The containment fan cooler system is used to prevent containment over pressurization for severe accident mitigation. The containment fan cooler system is a non safety-related system.

The containment fan cooler system is located in the containment. The containment fan cooler system consists of four fan cooler units.

2.7.5.3.1.3 Control Rod Drive Mechanism (CRDM) Cooling System

The CRDM cooling system removes heat dissipated by the CRDMs. The CRDM cooling system is a non safety-related system.

The CRDM cooling system is located in the containment. The CRDM cooling system consists of one CRDM cooling unit and two CRDM cooling fans.

2.7.5.3.1.4 Reactor Cavity Cooling System

The reactor cavity cooling system removes the heat transferred from the reactor vessel and the reactor vessel support structure, and the heat generated by gamma radiation and fast neutron bombardment in the primary shield wall. The reactor cavity cooling system is a non safety-related system.

The reactor cavity cooling system is located in the containment. The reactor cavity cooling system consists of two 100% capacity fans.

1. The functional arrangement of the CVVS is as described in the Design Description of Subsection 2.7.5.3.1.

2. Deleted.

3. The fire dampers in the ductwork of the containment purge system that penetrates the fire barriers that are required to protect safe shutdown capability close under design airflow conditions.

4. Non safety-related CVVS equipment and ductwork, including supports, whose failure could adversely interact with safety-related SSCs meet seismic Category II requirements.

2.7.5.3.2 Inspections, Tests, Analyses, and Acceptance Criteria

Table 2.7.5.3-1 describes the inspections, tests, analyses, and associated acceptance criteria for the CVVS.

The ITAAC associated with the equipment, components and piping of the CVVS that also comprise a portion of the CIS, are described in Table 2.11.2-2.

Table 2.7.5.3-1 Containment Ventilation System Inspections, Tests, Analyses, and Acceptance Criteria

Design Commitment	Inspections, Tests, Analyses	Acceptance Criteria
1. The functional arrangement of the CVVS is as described in the Design Description of Subsection 2.7.5.3.1.	1. Inspection of the as-built CVVS will be performed.	1. The as-built CVVS conforms to the functional arrangement as described in the Design Description of Subsection 2.7.5.3.1.
2. Deleted.	2. Deleted.	2. Deleted.
3. The fire dampers in the ductwork of the containment purge system that penetrates the fire barriers that are required to protect safe shutdown capability close under design air flow conditions.	3. Type tests, tests, a combination of type tests and analyses, or a combination of tests and analyses of the fire dampers will be performed under the design air flow conditions or conditions which bound the design air flow conditions.	3. A report exists and concludes that the fire dampers in the ductwork of the containment purge system that penetrates the fire barriers that are required to protect safe shutdown capability close under the design air flow conditions or the conditions which bound the design air flow conditions.
4. Non safety-related CVVS equipment and ductwork, including supports, whose failure could adversely interact with safety-related SSCs meet seismic Category II requirements.	4.i Analysis will be performed to demonstrate that as-built non safety-related CVVS equipment and ductwork, including supports, do not adversely interact with safety-related SSCs during and after an SSE.	4.i Reports exist and conclude that the as-built non safety-related CVVS equipment and ductwork, including supports, whose failure could adversely impact safety-related SSCs do not adversely interact with safety-related systems during and after an SSE.
	4.ii Inspection will be performed to verify that the as-built non safety-related CVVS equipment and ductwork, including supports, are installed in accordance with the configurations specified by the analyses.	4.ii The as-built non safety-related CVVS equipment and ductwork, including supports whose failure could adversely interact with safety-related SSCs are installed in accordance with the configurations specified by the analyses.

2.7.5.4 Auxiliary Building Ventilation System (ABVS)

2.7.5.4.1 Design Description

The ABVS provides conditioned air throughout the areas of the reactor building, the power source building, the auxiliary building and the access building during normal plant operation.

The ABVS includes:

- Auxiliary building HVAC system
- Non-Class 1E electrical room HVAC system
- Main steam / feedwater piping area HVAC system
- Technical support center HVAC system

2.7.5.4.1.1 Auxiliary Building HVAC System

The auxiliary building HVAC system provides conditioned air to maintain environmental conditions for areas housing mechanical and electrical equipment (including areas housing ESF equipment) in the reactor building, power source building, auxiliary building and access building during normal plant operation. With the exception of the isolation dampers, the auxiliary building HVAC system is a non safety-related system.

The major components of auxiliary building HVAC system are located in the auxiliary building. The auxiliary building HVAC system consists of supply and exhaust systems. The ABVS exhaust flow is aligned to the plant vent stack.

The auxiliary building HVAC system and containment low volume purge system are cross tied. This crosstie allows the exhaust flow from the auxiliary building HVAC system to be redirected to the containment low volume purge manually upon a high radiation alarm in the auxiliary building HVAC ductwork.

2.7.5.4.1.2 Non-Class 1E Electrical Room HVAC System

The non-Class 1E electrical room HVAC system provides conditioned air to maintain environmental conditions for equipment in the electrical rooms during normal plant operation and LOOP. The non-Class 1E electrical room HVAC system is powered by the alternate ac power source during a LOOP. The non-Class 1E electrical room HVAC system is a non safety-related system.

The major components of non-Class 1E electrical room HVAC system are located in the auxiliary building. The non-Class 1E electrical room HVAC system consists of two 50% capacity air handling units, return air fans, and two 100% capacity battery room exhaust fans.

2.7.5.4.1.3 Main Steam / Feedwater Piping Area HVAC System

The main steam / feedwater piping area HVAC system provides conditioned air to maintain environmental conditions in each of the main steam / feedwater piping areas. The main steam / feedwater piping area HVAC system is a non safety-related system.

The major components of main steam / feedwater piping area HVAC system are located in the reactor building. The system consists of four 50% capacity air handling units. Each pair of air handling units services one of two main steam / feedwater piping areas.

2.7.5.4.1.4 Technical Support Center HVAC System

The technical support center (TSC) HVAC system is a non safety-related system that provides conditioned air to maintain environmental conditions in the TSC during normal plant and accident conditions. The TSC HVAC system also maintains TSC habitability and permits personnel occupancy during plant accident conditions. The TSC HVAC system is powered by the alternate ac power source during a LOOP.

The major components of TSC HVAC system are located in the auxiliary building. The TSC HVAC system consists of one 100% capacity TSC air handling unit, one 100% capacity emergency filtration unit classified as non-safety and one 100% toilet/kitchen exhaust fan. The TSC emergency filtration unit consists in direction of airflow, a high efficiency filter, an electric heating coil, a HEPA filter, a charcoal adsorber, and a high efficiency filter.

1. The functional arrangement of the ABVS is as described in the Design Description of Subsection 2.7.5.4.1 and as shown in Figures 2.7.5.2-1 and 2.7.5.2-3.

2. The seismic Category I equipment identified in Table 2.7.5.4-1 can withstand seismic design basis loads without loss of safety function.

3.a Class 1E equipment identified in Table 2.7.5.4-1 is powered from its respective Class 1E division.

3.b. Separation is provided between redundant divisions of ABVS Class 1E cables and between Class 1E cables and non-Class 1E cables.

4.a The remotely operated dampers identified in Table 2.7.5.4-1 as having PSMS control, perform an active safety function after receiving a signal from PSMS.

4.b After loss of motive power, the remotely operated dampers identified in Table 2.7.5.4-1, assume the loss of motive power position.

4.c The fire dampers in the ductwork of the ABVS that penetrates the fire barriers that are required to protect safe shutdown capability close under design air flow conditions.

5. Controls are provided in the MCR to open and close the remotely operated dampers identified in Table 2.7.5.4-2.

6. Displays identified in Table 2.7.5.4-2 are provided in the MCR.

7. Displays and controls identified in Table 2.7.5.4-2 are provided in the RSC.

8. The TSC HVAC system provides a habitable workspace environment for the TSC under normal operations, abnormal and accident conditions of the plant.

9. The auxiliary building HVAC system provides conditioned air to maintain area temperature within design limits in areas housing mechanical and electrical equipment (including areas housing ESF equipment) in the reactor building, power source building, auxiliary building and access building during normal plant operation.

10. The auxiliary building HVAC system provides a flow rate that maintains a negative pressure in the radiological controlled areas.

11. Non safety-related ABVS equipment and ductwork, including supports, whose failure could adversely interact with safety-related SSCs meet seismic Category II requirements.

2.7.5.4.2 Inspections, Tests, Analyses, and Acceptance Criteria

Table 2.7.5.4-3 describes the inspections, tests analyses, and associated acceptance criteria for the ABVS.

Table 2.7.5.4-1 Auxiliary Building Ventilation System Equipment Characteristics

Equipment Name	Tag No.	ASME Code Section III Class	Seismic Category I	Remotely Operated Damper	Class 1E/ Qual. For Harsh Envir.	PSMS Control	Active Safety Function	Loss of Motive Power Position
Auxiliary Building HVAC System								
Penetration Area Supply Line Isolation Dampers	VAS-AOD-501 A, B, 502 A, B	—	Yes	Yes	Yes/No	ECCS Actuation	Transfer Closed	Closed
Penetration Area Exhaust Line Isolation Dampers	VAS-AOD-503 A, B, 504 A, B	—	Yes	Yes	Yes/No	ECCS Actuation	Transfer Closed	Closed
Safeguard Component Area Supply Line Isolation Dampers	VAS-AOD-505 A, B, C, D, 506 A, B, C, D	—	Yes	Yes	Yes/No	ECCS Actuation	Transfer Closed	Closed
Safeguard Component Area Exhaust Line Isolation Dampers	VAS-AOD-507 A, B, C, D, 508 A, B, C, D	—	Yes	Yes	Yes/No	ECCS Actuation	Transfer Closed	Closed
Auxiliary Building HVAC System Exhaust Line Isolation Dampers	VAS-AOD-511, 512	—	Yes	Yes	Yes/No	ECCS Actuation	Transfer Closed	Closed

Table 2.7.5.4-2 Auxiliary Building Ventilation System Equipment Alarms, Displays and Control Functions

Equipment/Instrument Name	MCR/RSC Alarm	MCR Display	MCR/RSC Control Function	RSC Display
Penetration Area Supply Line Isolation Dampers (VAS-AOD-501 A, B, 502 A, B)	No	Yes	Yes	Yes
Penetration Area Exhaust Line Isolation Dampers (VAS-AOD-503 A, B, 504 A, B)	No	Yes	Yes	Yes
Safeguard Component Area Supply Line Isolation Dampers (VAS-AOD-505 A, B, C, D, 506 A, B, C, D)	No	Yes	Yes	Yes
Safeguard Component Area Exhaust Line Isolation Dampers (VAS-AOD-507 A, B, C, D, 508 A, B, C, D)	No	Yes	Yes	Yes
Auxiliary Building HVAC system Exhaust Line Isolation Dampers (VAS-AOD-511, 512)	No	Yes	Yes	Yes

Table 2.7.5.4-3 Auxiliary Building Ventilation System Inspections, Tests, Analyses, and Acceptance Criteria (Sheet 1 of 4)

Design Commitment	Inspections, Tests, Analyses	Acceptance Criteria
1. The functional arrangement of the ABVS is as described in the Design Description of Subsection 2.7.5.4.1 and as shown in Figures 2.7.5.2-1 and. 2.7.5.2-3.	1. Inspection of the as-built ABVS will be performed.	1. The as-built ABVS conforms to the functional arrangement as described in the Design Description of Subsection 2.7.5.4.1 and as shown in Figures 2.7.5.2-1 and 2.7.5.2-3.
2. The seismic Category I equipment identified in Table 2.7.5.4-1 can withstand seismic design basis loads without loss of safety function.	2.i Inspections will be performed to verify that the as-built seismic Category I equipment identified in Table 2.7.5.4-1 is located in a seismic Category I structure.	2.i The as-built seismic Category I equipment identified in Table 2.7.5.4-1 is located a seismic Category I structure.
	2.ii Type tests, analyses, or a combination of type tests and analyses of seismic Category I equipment identified in Table 2.7.5.4-1 will be performed using analytical assumptions, or will be performed under conditions, which bound the seismic design basis requirements.	2.ii A report exists and concludes that the seismic Category I equipment identified in Table 2.7.5.4-1 can withstand seismic design basis loads without loss of safety function.
	2.iii Inspections and analyses will be performed to verify that the as-built seismic Category I equipment identified in Table 2.7.5.4-1, including anchorages, is seismically bounded by the tested or analyzed conditions.	2.iii A report exists and concludes that the as-built seismic Category I equipment identified in Table 2.7.5.4-1, including anchorages, is seismically bounded by the tested or analyzed conditions.
3.a Class 1E equipment identified in Table 2.7.5.4-1 is powered from its respective Class 1E division.	3.a A test will be performed on each division of the as-built Class 1E equipment identified in Table2.7.5.4-1 by providing a simulated test signal only in the Class 1E division under test.	3.a The simulated test signal exists at the as-built Class 1E equipment, identified in Table 2.7.5.4-1, under test.

Table 2.7.5.4-3 Auxiliary Building Ventilation System Inspections, Tests, Analyses, and Acceptance Criteria (Sheet 2 of 4)

Design Commitment	Inspections, Tests, Analyses	Acceptance Criteria
3.b. Separation is provided between redundant divisions of ABVS Class 1E cables, and between Class 1E cables and non-Class 1E cables.	3.b Inspections of the as-built Class 1E divisional cables will be performed.	3.b Physical separation or electrical isolation is provided in accordance with RG 1.75 between the as-built cables of redundant ABVS Class 1E divisions and between Class 1E cables and non-Class 1E cables.
4.a The remotely operated dampers identified in Table 2.7.5.4-1 as having PSMS control, perform an active safety function after receiving a signal from PSMS.	4.a Tests will be performed of the as-built remotely operated dampers identified in Table 2.7.5.4-1 as having PSMS control using a simulated signal.	4.a Each as-built remotely operated damper identified in Table 2.7.5.4-1 as having PSMS control, performs the active safety function identified in the Table 2.7.5.4-1 after receiving a simulated signal.
4.b After loss of motive power, the remotely operated dampers identified in Table 2.7.5.4-1, assume the loss of motive power position.	4.b Tests of the as-built remotely operated dampers identified in Table 2.7.5.4-1 will be performed under the conditions of loss of motive power.	4.b Upon loss of motive power, each as-built remotely operated damper identified in Table 2.7.5.4-1 assumes the indicated loss of motive power position.
4.c The fire dampers in the ductwork of the ABVS that penetrates the fire barriers that are required to protect safe shutdown capability close under design air flow conditions.	4.c Type tests, tests, a combination of type tests and analyses, or a combination of tests and analyses of the as-built fire dampers will be performed under the design air flow conditions or conditions which bound the design air flow conditions.	4.c A report exists and concludes that the fire dampers in the ductwork of the ABVS that penetrates the fire barriers that are required to protect safe shutdown capability close under the design air flow conditions or the conditions which bound the design air flow conditions.
5. Controls are provided in the MCR to open and close the remotely operated dampers identified in Table 2.7.5.4-2.	5. Tests will be performed on the as-built remotely operated dampers identified in Table 2.7.5.4-2 using controls in the as-built MCR.	5. Controls exist in the as-built MCR to open and close the as-built remotely operated dampers identified in Table 2.7.5.4-2.
6. Displays identified in Table 2.7.5.4-2 are provided in the MCR.	6. Inspections will be performed for retrievability of the displays identified in Table 2.7.5.4-2 in the as-built MCR.	6. Displays identified in Table 2.7.5.4-2 can be retrieved in the as-built MCR.

Table 2.7.5.4-3 Auxiliary Building Ventilation System Inspections, Tests, Analyses, and Acceptance Criteria (Sheet 3 of 4)

Design Commitment	Inspections, Tests, Analyses	Acceptance Criteria
7. Displays and controls identified in Table 2.7.5.4-2 are provided in the RSC.	7.i Inspection will be performed for retrievability of the displays identified in Table 2.7.5.4-2 in the as-built RSC.	7.i Displays identified in Table 2.7.5.4-2 can be retrieved in the as-built RSC.
	7.ii Tests of the as-built RSC control functions identified in Table 2.7.5.4-2 will be performed.	7.ii Controls in the as-built RSC operate the as-built equipment identified in Table 2.7.5.4-2 with an RSC control function.
8. The TSC HVAC system provides a habitable workspace environment for the TSC under normal operations, abnormal and accident conditions of the plant.	8.a Tests and analyses of the as-built TSC HVAC system will be performed.	8.a A report exists and concludes that the as-built TSC HVAC system is capable of providing conditioned air to maintain area design temperature for the TSC during normal operations, abnormal and accident conditions of the plant.
	8.b Deleted.	8.b Deleted.
9. The auxiliary building HVAC system provides conditioned air to maintain area temperature within design limits in areas housing mechanical and electrical equipment (including areas housing ESF equipment) in the reactor building, power source building, auxiliary building and access building during normal plant operation.	9. Tests and analyses of the as-built auxiliary building HVAC system will be performed.	9. A report exists and concludes that the as-built auxiliary building HVAC system is capable of providing conditioned air to maintain area temperature within design limits in the areas housing mechanical and electrical equipment (including areas housing ESF equipment) in the reactor building, power source building, auxiliary building and access building during normal plant operation.
10. The auxiliary building HVAC system provides a flow rate that maintains a negative pressure in the radiological controlled areas.	10. Tests and analyses of the as-built auxiliary building HVAC system will be performed.	10. A report exists and concludes that the as-built auxiliary building exhaust fans provide a flow rate $\geq$ 108,000 cfm to maintain a negative pressure in the radiological controlled areas.

Table 2.7.5.4-3 Auxiliary Building Ventilation System Inspections, Tests, Analyses, and Acceptance Criteria (Sheet 4 of 4)

Design Commitment	Inspections, Tests, Analyses	Acceptance Criteria
11. Non safety-related ABVS equipment and ductwork, including supports, whose failure could adversely interact with safety-related SSCs meet seismic Category II requirements.	11.i Analysis will be performed to demonstrate that as-built non safety-related CVVS equipment and ductwork, including supports, does not adversely interact with safety-related SSCs during and after an SSE.	11.i Reports exist and conclude that the as-built non safety-related ABVS equipment and ductwork, including supports, whose failure could adversely impact safety-related SSCs does not adversely interact with safety-related systems during and after an SSE.
	11.ii Inspection will be performed to verify that the as-built non safety-related ABVS equipment and ductwork, including supports, are installed in accordance with the configurations specified by the analyses.	11.ii The as-built non safety-related ABVS equipment and ductwork, including supports whose failure could adversely interact with safety related SSCs are installed in accordance with the configurations specified by the analyses.

2.7.5.5 Turbine Building Area Ventilation System

This system does not require ITAAC.

2.7.6 Auxiliary Systems

2.7.6.1 New Fuel Storage

2.7.6.1.1 Design Description

The purpose and function of the new fuel storage facilities are to store nuclear fuel assemblies prior to their being irradiated in the reactor core. The new fuel storage facilities are safety-related. The new fuel storage facilities are located in the fuel handling area of the reactor building. The new fuel pit is provided with a drain system, which is connected to the reactor building sump and designed to prevent backflow into the new fuel pit to prevent the new fuel pit from being flooded. Equipment, including the new fuel pit cover, with a potential to damage the stored fuel is designed to prevent failure.

1. Deleted.

2. The functional arrangement of the new fuel storage facilities is as described in the Design Description of Subsection 2.7.6.1.1.

3. Deleted.

4. Deleted.

5. The new fuel storage racks are capable of maintaining new fuel subcritical.

2.7.6.1.2 Inspections, Tests, Analyses, and Acceptance Criteria

Table 2.7.6.1-1 describes the ITAAC for the new fuel storage facilities.

Table 2.7.6.1-1 New Fuel Storage Inspections, Tests, Analyses, and Acceptance Criteria

Design Commitment	Inspections, Tests, Analyses	Acceptance Criteria
1. Deleted.	1.a Deleted.	1.a Deleted.
	1.b Deleted.	1.b Deleted.
	1.c Deleted.	1.c Deleted.
2. The functional arrangement of the new fuel storage facilities is as described in the Design Description of Subsection 2.7.6.1.1.	2. Inspection of the as-built new fuel storage facilities will be performed.	2. The as-built new fuel storage facilities conform to the functional arrangement as described in the Design Description of Subsection 2.7.6.1.1.
3. Deleted.	3. Deleted.	3. Deleted.
4. Deleted.	4. Deleted.	4. Deleted.
5. The new fuel storage racks are capable of maintaining new fuel subcritical.	5.i Inspections of the as-built new fuel storage racks will be performed.	5.i The as-built new fuel storage rack dimensions are consistent with the dimensions used in the new fuel storage racks criticality analysis.
	5.ii Inspections will be performed to verify that the materials of the as-built new fuel storage racks conform to the new fuel storage racks criticality analysis.	5.ii The materials of the as-built new fuel storage racks conform to the new fuel storage racks criticality analysis.

2.7.6.2 Spent Fuel Storage

2.7.6.2.1 Design Description

The purpose and function of the spent fuel storage facilities are to store nuclear fuel assemblies after they have been irradiated in the reactor core. The spent fuel storage facilities are safety-related. The spent fuel storage facilities are located in the fuel handling area of the reactor building. Equipment with the potential to damage the stored fuel is designed to prevent failure in the event of a safe shutdown earthquake (SSE).

To preclude unanticipated drainage, the SFP is not connected to the equipment drain system. Nozzles or piping connected to the SFP are installed to preclude draining below the allowed water level necessary for spent fuel cooling and radiation shielding. A weir and gate provide physical isolation of the refueling canal from each of the pits. All the gates are located above the top elevation of the fuel seated in the SFP racks; they are normally closed and only opened as required.

1. Deleted.

2. The functional arrangement of the spent fuel storage facilities is as described in the Design Description of Subsection 2.7.6.2.1.

3. Deleted.

4. Deleted.

5. The spent fuel storage racks are capable of maintaining spent fuel subcritical.

2.7.6.2.2 Inspections, Tests, Analyses, and Acceptance Criteria

Table 2.7.6.2-1 describes the ITAAC for the spent fuel storage facilities.

Table 2.7.6.2-1 Spent Fuel Storage Inspections, Tests, Analyses, and Acceptance Criteria

Design Commitment	Inspections, Tests, Analyses	Acceptance Criteria
1. Deleted.	1.a Deleted.	1.a Deleted.
	1.b Deleted.	1.b Deleted.
	1.c Deleted.	1.c Deleted.
2. The functional arrangement of the spent fuel storage facilities is as described in the Design Description of Subsection 2.7.6.2.1.	2. Inspection of the as-built spent fuel facilities will be performed.	2. The as-built spent fuel storage facilities conform to the functional arrangement as described in the Design Description of Subsection 2.7.6.2.1.
3. Deleted.	3. Deleted.	3. Deleted.
4. Deleted.	4. Deleted.	4. Deleted.
5. The spent fuel storage racks are capable of maintaining spent fuel subcritical.	5.i Inspections of the as-built spent fuel storage racks will be performed.	5.i The as-built spent fuel storage rack dimensions are consistent with the dimensions used in the spent fuel storage racks criticality analysis.
	5.ii Inspections will be performed to verify that the materials of the as-built spent fuel storage racks conform to the spent fuel storage racks criticality analysis.	5.ii The materials of the as-built spent fuel storage racks conform to the spent fuel storage racks criticality analysis.

2.7.6.3 Spent Fuel Pit Cooling and Purification System (SFPCS)

2.7.6.3.1 Design Description

The spent fuel pit cooling and purification system (SFPCS) removes the decay heat generated by spent fuel assemblies in the spent fuel pit (SFP) during all plant operating conditions, as well as providing purification and clarification of the SFP water. The SFPCS provides purification of the water in the refueling water storage pit (RWSP), the refueling cavity, and the refueling water storage auxiliary tank (RWSAT) in conjunction with the refueling water system, and transfers water to the chemical and volume control system (CVCS) charging pump as an alternative water source. The SFP can supply water for RCS makeup by gravity injection as a countermeasure for loss of RHR.

The SFPCS cooling portion, including the makeup line from the RWSP into the discharge line of the SFPCS cooling loop, is safety-related, as shown in Tables 2.7.6.3-1 and 2.7.6.3-2. The purification portion of the SFPCS is non safety-related.

1. The functional arrangement of the SFPCS is as described in the Design Description of Subsection 2.7.6.3.1 and in Table 2.7.6.3-4, and as shown in Figure 2.7.6.3-1.

2.a.i The ASME Code Section III components of the SFPCS, identified in Table 2.7.6.3-1, are fabricated, installed and inspected in accordance with ASME Code Section III requirements.

2.a.ii The ASME Code Section III components of the SFPCS identified in Table 2.7.6.3-1 are reconciled with the design requirements.

2.b.i The ASME Code Section III piping of the SFPCS, including supports, identified in Table 2.7.6.3-2 is fabricated, installed, and inspected in accordance with ASME Code Section III requirements.

2.b.ii The ASME Code Section III piping of the SFPCS, including supports, identified in Table 2.7.6.3-2 is reconciled with the design requirements.

3.a Pressure boundary welds in ASME Code Section III components, identified in Table 2.7.6.3-1, meet ASME Code Section III requirements for non-destructive examination of welds.

3.b Pressure boundary welds in ASME Code Section III piping, identified in Table 2.7.6.3-2, meet ASME Code Section III requirements for non-destructive examination of welds.

4.a The ASME Code Section III components, identified in Table 2.7.6.3-1, retain their pressure boundary integrity at their design pressure.

4.b The ASME Code Section III piping, identified in Table 2.7.6.3-2, retain its pressure boundary integrity at its design pressure.

5. The seismic Category I equipment, identified in Table 2.7.6.3-1 can withstand seismic design basis loads without loss of safety function.

6. The seismic Category I piping, including supports, identified in Table 2.7.6.3-2 can withstand seismic design basis loads without a loss of its safety function.

7.a Class 1E equipment, identified in Table 2.7.6.3-1, is powered from its respective Class 1E division.

7.b Separation is provided between redundant divisions of SFPCS Class 1E cables, and between Class 1E cables and non-Class 1E cables.

8. The SFPCS circulates the SFP water through the SFP heat exchangers to remove the decay heat generated by spent fuel assemblies.

9. Displays identified in Table 2.7.6.3-3 are provided in the MCR.

10. Displays, and controls identified in Table 2.7.6.3-3 are provided in the RSC.

11. Controls are provided in the MCR to start and stop the spent fuel pit pumps identified in Table 2.7.6.3-3.

12. The check valves, identified in Table 2.7.6.3-1 as having an active safety function, perform an active safety function to change position as indicated in the table.

2.7.6.3.2 Inspections, Tests, Analyses, and Acceptance Criteria

Table 2.7.6.3-5 describes the ITAAC for the spent fuel pit cooling and purification system.

Table 2.7.6.3-1 Spent Fuel Pit Cooling and Purification System Equipment Characteristics

Equipment Name	Tag No.	ASME Code Section III Class	Seismic Category I	Remotely Operated Valve	Class 1E/ Qual. For Harsh Envir.	PSMS Control	Active Safety Function	Loss of Motive Power Position
Spent fuel pit pumps	SFS-MPP-001A,B	3	Yes	–	Yes/No	Remote Manual	Start	–
Spent fuel pit heat exchangers	SFS-MHX-001A,B	3	Yes	–	—/—	—/—	—	–
Spent fuel pit	SFS-MPT-001	—	Yes	—	—/—	—	—	–
Spent fuel pump discharge check valves	SFS-VLV-006A,B	3	Yes	—	—/—	—	Transfer Open/ Transfer Close	–

Note: Dash (-) indicates not applicable

Table 2.7.6.3-2 Spent Fuel Pit Cooling and Purification System Piping Characteristics

Pipe Line Name	ASME Code Section III Class	Seismic Category I
SFP cooling piping up to and including the following valves: Purification line isolation valves: SFS-VLV-101A,B and SFS-VLV-133A,B	3	Yes
Safety-related SFP make up line from RWSP	3	Yes
Connection piping to and from RHRS	3	Yes
Water transfer line to transfer canal, cask pit, fuel inspection pit.	3	Yes

Table 2.7.6.3-3 Spent Fuel Pit Cooling and Purification System Equipment Alarms, Displays and Control Functions

Equipment/Instrument Name	MCR/RSC Alarm	MCR Display	MCR/RSC Control Function	RSC Display
SFP pump SFS-MPP-001A, B	No	Yes	Yes	No

Table 2.7.6.3-4 Spent Fuel Pit Cooling and Purification System Location of Equipment and Piping

System and Components	Location
Spent fuel pit	Reactor Building
Spent fuel pit pumps	Reactor Building
Spent fuel pit heat exchangers	Reactor Building
SFP cooling piping up to and including the following valves: Purification line isolation valves: SFS-VLV-101A,B and SFS-VLV-133A,B	Reactor Building
Safety related SFP make up line from RWSP	Reactor Building
Connection piping to and from RHRS	Reactor Building
Water transfer line to transfer canal, cask pit, fuel inspection pit.	Reactor Building

Table 2.7.6.3-5 Spent Fuel Pit Cooling and Purification System Inspections, Tests, Analyses, and Acceptance Criteria (Sheet 1 of 5)

Design Commitment	Inspections, Tests, Analyses	Acceptance Criteria
1. The functional arrangement of the SFPCS is as described in the Design Description of Subsection 2.7.6.3.1 and in Table 2.7.6.3-4 and as shown in Figure 2.7.6.3-1.	1. Inspection of the as-built SFPCS will be performed.	1. The as-built SFPCS conforms to the functional arrangement as described in the Design Description of Subsection 2.7.6.3.1 and in Table 2.7.6.3-4 and as shown in Figure 2.7.6.3-1.
2.a.i The ASME Code Section III components of the SFPCS, identified in Table 2.7.6.3-1, are fabricated, installed and inspected in accordance with ASME Code Section III requirements.	2.a.i Inspection of the as-built ASME Code Section III components of the SFPCS, identified in Table 2.7.6.3-1, will be performed.	2.a.i The ASME Code Section III data report(s) (certified, when required by ASME Code) and inspection reports (including N-5 Data Reports where applicable) exist and conclude that the as-built ASME Code Section III components of the SFPCS identified in Table 2.7.6.3-1 are fabricated, installed, and inspected in accordance with ASME Code Section III requirements.
2.a.ii The ASME Code Section III components of the SFPCS identified in Table 2.7.6.3-1 are reconciled with the design requirements.	2.a.ii A reconciliation analysis of the components identified in Table 2.7.6.3-1 using as-designed and as-built information and ASME Code Section III design report(s) (NCA-3550) will be performed.	2.a.ii The ASME Code Section III design report(s) (certified, when required by ASME Code) exist and conclude that design reconciliation has been completed in accordance with the ASME Code, for the as-built ASME Code Section III components of the SFPCS identified in Table 2.7.6.3-1. The report documents the results of the reconciliation analysis.
2.b.i The ASME Code Section III piping of the SFPCS, including supports, identified in Table 2.7.6.3-2, is fabricated, installed, and inspected in accordance with ASME Code Section III requirements.	2.b.i Inspection of the as-built ASME Code Section III piping of the SFPCS, including supports, identified in Table 2.7.6.3-2, will be performed.	2.b.i The ASME Code Section III data report(s) (certified, when required by ASME Code) and inspection reports (including N-5 Data Reports where applicable) exist and conclude that the as-built ASME Code Section III piping of the SFPCS, including supports, identified in Table 2.7.6.3-2 is fabricated, installed, and inspected in accordance with ASME Code Section III requirements.

Table 2.7.6.3-5 Spent Fuel Pit Cooling and Purification System Inspections, Tests, Analyses, and Acceptance Criteria (Sheet 2 of 5)

Design Commitment	Inspections, Tests, Analyses	Acceptance Criteria
2.b.ii The ASME Code Section III piping of the SFPCS, including supports, identified in Table 2.7.6.3-2 is reconciled with the design requirements.	2.b.ii A reconciliation analysis of the piping of the SFPCS, including supports, identified in Table 2.7.6.3-2, using as-designed and as-built information and ASME Code Section III design report(s) (NCA-3550) will be performed.	2.b.ii The ASME Code Section III design report(s) (certified when required by ASME Code) exist and conclude that design reconciliation has been completed in accordance with the ASME Code, for the as-built ASME Code Section III piping of the SFPCS, including supports, identified in Table 2.7.6.3-2. The report documents the results of the reconciliation analysis.
3.a Pressure boundary welds in ASME Code Section III components, identified in Table 2.7.6.3-1, meet ASME Code Section III requirements for non-destructive examination of welds.	3.a Inspections of the as-built pressure boundary welds in ASME Code Section III components identified in Table 2.7.6.3-1, will be performed in accordance with the ASME Code Section III.	3.a The ASME Code Section III code reports exist and conclude that the ASME Code Section III requirements are met for non-destructive examination of the as-built pressure boundary welds in ASME Code Section III components identified in Table 2.7.6.3-1.
3.b Pressure boundary welds in ASME Code Section III piping, identified in Table 2.7.6.3-2, meet ASME Code Section III requirements for non-destructive examination of welds.	3.b Inspections of the as-built pressure boundary welds in ASME Code Section III piping identified in Table 2.7.6.3-2 will be performed in accordance with the ASME Code Section III.	3.b The ASME Code Section III code reports exist and conclude that the ASME Code Section III requirements are met for non-destructive examination of the as-built pressure boundary welds in ASME Code Section III piping identified in Table 2.7.6.3-2.
4.a The ASME Code Section III components, identified in Table 2.7.6.3-1, retain their pressure boundary integrity at their design pressure.	4.a A hydrostatic test will be performed on the as-built components, identified in Table 2.7.6.3-1, required by the ASME Code Section III to be hydrostatically tested.	4.a ASME Code Data Report(s) exist and conclude that the results of the hydrostatic test of the as-built components identified in Table 2.7.6.3-1 as ASME Code Section III conform to the requirements of the ASME Code Section III.

Table 2.7.6.3-5 Spent Fuel Pit Cooling and Purification System Inspections, Tests, Analyses, and Acceptance Criteria (Sheet 3 of 5)

Design Commitment	Inspections, Tests, Analyses	Acceptance Criteria
4.b The ASME Code Section III piping, identified in Table 2.7.6.3-2, retains its pressure boundary integrity at its design pressure.	4.b A hydrostatic test will be performed on the as-built piping, identified in Table 2.7.6.3-2, required by the ASME Code Section III to be hydrostatically tested.	4.b ASME Code Data Report(s) exist and conclude that the results of the hydrostatic test of the as-built piping identified in Table 2.7.6.3-2 as ASME Code Section III conform to the requirements of the ASME Code Section III.
5. The seismic Category I equipment, identified in Table 2.7.6.3-1 can withstand seismic design basis loads without loss of safety function.	5.i Inspections will be performed to verify that the as-built seismic Category I equipment identified in Table 2.7.6.3-1 is located in a seismic Category I structure.	5.i The as-built seismic Category I equipment identified in Table 2.7.6.3-1 is located in a seismic Category I structure.
	5.ii Type tests, analyses, or a combination of type tests and analyses of seismic Category I equipment identified in Table 2.7.6.3-1 will be performed using analytical assumptions, or will be performed under conditions, which bound the seismic design basis requirements.	5.ii A report exists and concludes that the seismic Category I equipment identified in Tables 2.7.6.3-1 can withstand seismic design basis loads without loss of safety function.
	5.iii Inspections and analyses will be performed to verify that the as-built seismic Category I equipment identified in Table 2.7.6.3-1, including anchorages, is seismically bounded by the tested or analyzed conditions.	5.iii A report exists and concludes that the as-built seismic Category I equipment identified in Table 2.7.6.3-1, including anchorages, is seismically bounded by the tested or analyzed conditions.
6. The seismic Category I piping, including supports, identified in Table 2.7.6.3-2 can withstand seismic design basis loads without a loss of its safety function.	6.i Inspections will be performed to verify that the as-built seismic Category I piping, including supports, identified in Table 2.7.6.3-2 is supported by a seismic Category I structure(s).	6.i The as-built seismic Category I piping, including supports, identified in Table 2.7.6.3-2 is supported by a seismic Category I structure(s).

Table 2.7.6.3-5 Spent Fuel Pit Cooling and Purification System Inspections, Tests, Analyses, and Acceptance Criteria (Sheet 4 of 5)

Design Commitment	Inspections, Tests, Analyses	Acceptance Criteria
	6.ii Inspections and analyses will be performed to verify that the as-built seismic Category I piping, including supports, identified in Table 2.7.6.3-2 can withstand seismic design basis loads without a loss of its safety function.	6.ii A report exists and concludes that the as-built seismic Category I piping, including supports, identified in Table 2.7.6.3-2 can withstand seismic design basis loads without a loss of its safety function.
7.a Class 1E equipment, identified in Table 2.7.6.3-1, is powered from its respective Class 1E division.	7.a A test will be performed on each division of the as-built Class 1E equipment identified in Table 2.7.6.3-1 by providing a simulated test signal only in the Class 1E division under test.	7.a The simulated test signal exists at the as-built Class 1E equipment identified in Table 2.7.6.3-1 under test.
7.b Separation is provided between redundant divisions of SFPCS Class 1E cables, and between Class 1E cables and non-Class 1E cables.	7.b Inspections of the as-built Class 1E divisional cables will be performed.	7.b Physical separation or electrical isolation is provided in accordance with RG 1.75, between the as-built cables of redundant SFPCS Class 1E divisions and between Class 1E cables and non-Class 1E cables.
8. The SFPCS circulates the SFP water through the SFP heat exchangers to remove the decay heat generated by spent fuel assemblies.	8.a An analysis will be performed that determines the heat removal capability of the SFP heat exchangers.	8.a A report exists and concludes that the product of the overall heat transfer coefficient and the effective heat transfer area, UA, of each SFP heat exchanger is greater than or equal to 4.3×10^6 Btu/hr-°F.
	8.b Tests will be performed to confirm that the as-built SFP pumps can provide flow to the as-built SFP heat exchangers.	8.b Each as-built SFP pump delivers at least 3600 gpm to each as-built SFP heat exchanger.
9. Displays identified in Table 2.7.6.3-3 are provided in the MCR.	9. Inspection will be performed for the retrievability of the displays identified in Table 2.7.6.3-3 in the as-built MCR.	9. Displays identified in Table 2.7.6.3-3 can be retrieved in the as-built MCR.

Table 2.7.6.3-5 Spent Fuel Pit Cooling and Purification System Inspections, Tests, Analyses, and Acceptance Criteria (Sheet 5 of 5)

Design Commitment	Inspections, Tests, Analyses	Acceptance Criteria
10. Displays, and controls identified in Table 2.7.6.3-3 are provided in the RSC.	10.i Inspection will be performed for retrievability of the displays identified in Table 2.7.6.3-3 in the as-built RSC.	10.i Displays identified in Table 2.7.6.3-3 can be retrieved in the as-built RSC.
	10.ii Tests of the as-built RSC control functions identified in Table 2.7.6.3-3 will be performed.	10.ii Controls in the as-built RSC operate the as-built equipment identified in Table 2.7.6.3-3 with an RSC control function.
11. Controls are provided in the MCR to start and stop the spent fuel pit pumps identified in Table 2.7.6.3-3.	11. Tests will be performed on the as-built spent fuel pit pumps identified in Table 2.7.6.3-3 using controls in the as-built MCR.	11. Controls in the as-built MCR start and stop the as-built spent fuel pit pumps identified in Table 2.7.6.3-3.
12. The check valves, identified in Table 2.7.6.3-1 as having an active safety function, perform an active safety function to change position as indicated in the table.	12. Tests of the as-built check valves identified in Table 2.7.6.3 as having an active safety function will be performed under preoperational test pressure, temperature, and fluid flow conditions.	12. Each as-built check valve identified in Table 2.7.6.3 as having an active safety function changes position as indicated in Table 2.7.6.3-1 under preoperational test conditions.

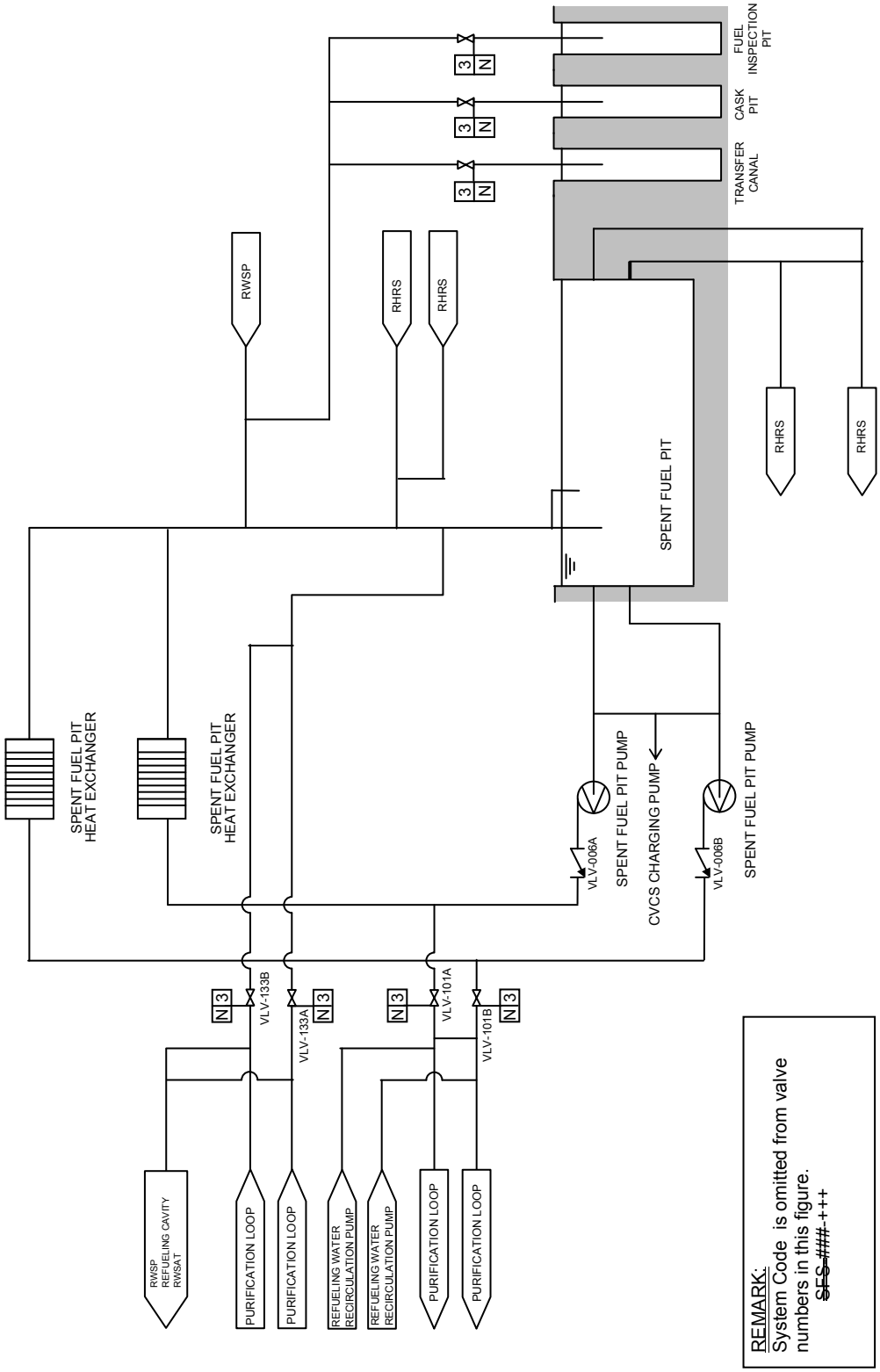

Figure 2.7.6.3-1 Spent Fuel Pit Cooling and Purification System

2.7.6.4 Light Load Handling System (LLHS)

2.7.6.4.1 Design Description

The light load handling system (LLHS) is located in the containment vessel and the fuel storage and handling area of the reactor building. It consists of mechanical and electrical equipment and building structural features related to refueling operations. The LLHS equipment includes the refueling machine, the fuel handling machine, the new fuel elevator, the suspension hoist on the spent fuel cask handling crane, the fuel transfer tube, and the fuel transfer tube blind flange. The LLHS has interlock actuation annunciation lamps to visually prompt the operator with the interlock status. Additionally, movement of the fuel handling machine and refueling machine bridge is audibly signaled. All of the LLHS, except the safety-related fuel transfer tube and blind flange, is non-safety related.

1. The functional arrangement of the LLHS is as described in the Design Description of Subsection 2.7.6.4.1.

2.a The seismic Category I equipment identified in Table 2.7.6.4-1 can withstand seismic design basis loads without the loss of safety function.

2.b The seismic Category II LLHS equipment identified in Table 2.7.6.4-1 does not interact with seismic Category I SSCs during or following an SSE.

3. The refueling machine utilizes electrical interlocks, limit switches, and mechanical stops to:

   a) prevent damage to a fuel assembly due to inadvertent operation of the gripper controls

   b) assure appropriate radiation shielding depth below the water level for fuel assemblies handled in the refueling cavity, and

   c) monitor the fuel assembly load for imparted loads greater than the nominal weight of the fuel assembly.

4. The suspension hoist of the spent fuel cask handling crane is precluded from lifting a load greater than its rated capacity by a load limit interlock.

5. The new fuel elevator winch has a load sensing device which prevents a fuel assembly from being raised.

6. The fuel handling machine utilizes electrical interlocks, limit switches, and mechanical stops to:

   a) prevent damage to a fuel assembly due to inadvertent operation of the gripper controls

   b) assure appropriate radiation shielding depth below the water level for fuel assemblies handled in the spent fuel pit, and

c) Monitor the fuel assembly load for imparted loads greater than the nominal weight of the fuel assembly.

7. Deleted.

8. The fuel transfer tube is fabricated, installed and inspected in accordance with ASME Code Section III requirements.

9. The ASME Code Section III fuel transfer tube is reconciled with the design requirements.

10. Pressure boundary welds in the fuel transfer tube meet ASME Code Section III requirements for non-destructive examination of welds.

2.7.6.4.2 Inspections, Tests, Analyses, and Acceptance Criteria

Table 2.7.6.4-2 describes the ITAAC for the light load handling system.

Table 2.7.6.4-1 Light Load Handling System Characteristics

Name	Seismic Category
New Fuel Elevator	II
Suspension Hoist and Auxiliary Hoist on the Spent Fuel Cask Handling Crane	II
Refueling Machine	II
Fuel Handling Machine	II
Fuel Transfer Tube	I
Fuel Transfer Tube Blind Flange	I

Table 2.7.6.4-2 Light Load Handling System Inspections, Tests, Analyses, and Acceptance Criteria (Sheet 1 of 4)

Design Commitment	Inspections, Tests, Analyses	Acceptance Criteria
1. The functional arrangement of the LLHS is as described in the Design Description of Subsection 2.7.6.4.1.	1. Inspection of the as-built LLHS will be performed.	1. The as-built LLHS conforms to the functional arrangement as described in the Design Description of Subsection 2.7.6.4.1.
2.a The seismic Category I equipment identified in Table 2.7.6.4-1 can withstand seismic design basis loads without the loss of safety function.	2.a.i Inspections will be performed to verify that the as-built seismic Category I equipment identified in Table 2.7.6.4-1 is located in a seismic Category I structure.	2.a.i The as-built seismic Category I equipment identified in Table 2.7.6.4-1 is located in a seismic Category I structure.
	2.a.ii Type tests, analyses or a combination of type tests and analyses of seismic Category I equipment identified in Table 2.7.6.4-1 will be performed using analytical assumptions, or will be performed under conditions, which bound the seismic design basis requirements.	2.a.ii A report exists and concludes that the seismic Category I equipment identified in Table 2.7.6.4-1 can withstand seismic design basis loads without loss of safety function.
	2.a.iii Inspections and analysis will be performed to verify that the as-built seismic Category I equipment identified in Table 2.7.6.4-1, including anchorages, is seismically bounded by the tested or analyzed conditions.	2.a.iii A report exists and concludes that the as-built seismic Category I equipment identified in Table 2.7.6.4-1, including anchorages, is seismically bounded by the tested or analyzed conditions.
2.b The seismic Category II LLHS equipment identified in Table 2.7.6.4-1 does not interact with seismic Category I SSCs during or following an SSE.	2.b A combination of inspections and analyses of the as-built seismic Category II LLHS equipment identified in Table 2.7.6.4-1 will be performed.	2.b A report exists and concludes that the as-built seismic Category II LLHS equipment identified in Table 2.7.6.4-1 does not interact with seismic Category I SSCs during or following an SSE.

Table 2.7.6.4-2 Light Load Handling System Inspections, Tests, Analyses, and Acceptance Criteria (Sheet 2 of 4)

Design Commitment	Inspections, Tests, Analyses	Acceptance Criteria
3. The refueling machine utilizes electrical interlocks, limit switches, and mechanical stops to: a) prevent damage to a fuel assembly due to inadvertent operation of the gripper controls b) assure appropriate radiation shielding depth below the water level for fuel assemblies handled in the refueling cavity, and c) monitor the fuel assembly load for imparted loads greater than the nominal weight of the fuel assembly.	3.a A test of the as-built refueling machine will be performed by operating the open controls of the gripper while suspending a dummy fuel assembly.	3.a The gripper of the as-built refueling machine does not open while suspending a dummy fuel assembly.
	3.b.i An analysis will be performed to determine the preset position of the limit switch to stop lifting of spent fuel to maintain shielding depth of water above a spent fuel assembly being handled in the refueling cavity.	3.b.i A report exists and concludes that the preset position of the limit switch maintains a shielding depth of water of 11’ -1” or greater, above a spent fuel assembly being handled in the refueling cavity.
	3.b.ii A test will be performed to verify that the as-built refueling machine stops lifting a dummy fuel assembly at the preset position.	3.b.ii The as-built refueling machine stops lifting the dummy fuel assembly at the preset position determined by the analysis.
	3.c A Test of the as-built refueling machine will be performed by attempting to lift a dummy fuel assembly that is heavier than the nominal fuel assembly.	3.c The as-built refueling machine can not lift the load of the dummy fuel assembly that is heavier than the nominal weight of the fuel assembly.
4. The suspension hoist of the spent fuel cask handling crane is precluded from lifting a load greater than its rated capacity by a load limit interlock.	4. Test of the as-built spent fuel cask handling crane suspension hoist’s load limit interlock will be performed.	4. The as-built spent fuel cask handling crane suspension hoist is precluded from lifting a load greater than its rated capacity of 2 metric tons.
5. The new fuel elevator winch has a load sensing device which prevents a fuel assembly from being raised.	5. Test of the as-built load sensing device on the new fuel elevator will be performed.	5. The as-built new fuel elevator winch has a load sensing device which prevents a fuel assembly from being raised.
6. The fuel handling machine utilizes electrical interlocks, limit switches, and mechanical stops to: a) prevent damage to a fuel assembly due to inadvertent operation of the gripper	6.a A Test of the as-built fuel handling machine will be performed by operating the open controls of the gripper while suspending a dummy fuel assembly.	6.a The gripper of the as-built fuel handling machine does not open while suspending the dummy fuel assembly.

Table 2.7.6.4-2 Light Load Handling System Inspections, Tests, Analyses, and Acceptance Criteria (Sheet 3 of 4)

Design Commitment	Inspections, Tests, Analyses	Acceptance Criteria
controls, b) assure appropriate radiation shielding depth below the water level for fuel assemblies handled in the spent fuel pit, and c) monitor the fuel assembly load for imparted loads greater than the nominal weight of the fuel assembly.	6.b.i An analysis will be performed to determine the preset position of the limit switch to stop lifting of spent fuel to maintain shielding depth of water above a spent fuel assembly being handled in the spent fuel pit.	6.b.i A report exists and concludes that the preset position of the limit switch maintains a shielding depth of water of 11’ -1” or greater, above a spent fuel assembly being handled in the spent fuel pit.
	6.b.ii A test will be performed to verify that the as-built fuel handling machine stops lifting a dummy fuel assembly at the preset position.	6.b.ii The as-built fuel handling machine stops lifting the dummy fuel assembly at the preset position determined by the analysis.
	6.c A test of the as-built fuel handling machine will be performed by attempting to lift a dummy assembly that is heavier than the nominal fuel assembly.	6.c The as-built fuel handling machine can not lift the load of the dummy fuel assembly that is heavier than the nominal weight of the fuel assembly.
7. Deleted		
8. The fuel transfer tube is fabricated, installed and inspected in accordance with ASME Code Section III requirements.	8. Inspection of the as-built fuel transfer tube will be performed.	8. The ASME Code Section III data report(s) (certified, when required by ASME Code) and inspection reports (including N-5 Data Reports where applicable) exist and conclude that the as-built fuel transfer tube is fabricated, installed, and inspected in accordance with ASME Code Section III requirements.

Table 2.7.6.4-2 Light Load Handling System Inspections, Tests, Analyses, and Acceptance Criteria (Sheet 4 of 4)

Design Commitment	Inspections, Tests, Analyses	Acceptance Criteria
9. The ASME Code Section III fuel transfer tube is reconciled with the design requirements.	9. A reconciliation analysis of the fuel transfer tube using as-designed and as-built information and ASME Code Section III design report(s) (NCA-3550) will be performed.	9. The ASME Code Section III design report(s) (certified, when required by ASME Code) exist and conclude that design reconciliation has been completed in accordance with the ASME Code, for the as-built fuel transfer tube. The report documents the results of the reconciliation analysis.
10. Pressure boundary welds in the fuel transfer tube meet ASME Code Section III requirements for non-destructive examination of welds.	10. Inspections of the as-built pressure boundary welds in the fuel transfer tube will be performed in accordance with the ASME Code Section III.	10. The ASME Code Section III code reports exist and conclude that the ASME Code Section III requirements are met for non-destructive examination of the as-built pressure boundary welds in fuel transfer tube.

2.7.6.5 Overhead Heavy Load Handling System (OHLHS)

2.7.6.5.1 Design Description

The purpose and function of the overhead heavy load handling system (OHLHS) is to move heavy loads. For the US-APWR, a heavy load is defined as any load greater than approximately 2450 lbs. The OHLHS is non safety-related. The OHLHS is located in the reactor building, specifically the fuel storage and handling area, and in the pre-stressed concrete containment vessel (PCCV) of the reactor building.

The OHLHS consist of the spent fuel cask handling crane in the fuel handling area and the polar crane in the PCCV. The main hoisting systems of these cranes and the polar crane auxiliary hoist are single-failure-proof components to prevent uncontrolled lowering of heavy loads. The use of single-failure-proof cranes precludes the need to perform load drop analysis.

The hoisting systems consist of reeving, wire rope, hoisting mechanisms, and hooks. A single rope failure of the reeving systems of the single-failure-proof cranes will not result in a load drop. Each single-failure-proof crane is provided with at least two holding brakes.

The polar crane has two load handling hoists, the main and auxiliary hoists. The spent fuel cask handling crane has three load handling hoists: the main, the auxiliary, and the suspension hoist. The suspension hoist is considered part of the light load handling system, since it is only used for new fuel handling.

1. The functional arrangement of the OHLHS is as described in the Design Description of Subsection 2.7.6.5.1.

2.a The OHLHS is a seismic Category II system and does not interact with seismic Category I SSCs during or following an SSE.

2.b The polar crane has a seismic restraint system that prevents derailment of either the hoist trolley or the main bridge box girders during or following an SSE.

2.c.i The PCCV polar crane main and auxiliary hoists meet requirements of single-failure-proof cranes.

2.c.ii The spent fuel cask handling crane main hoist meets requirements of single-failure-proof cranes.

2.d Special lifting devices and slings used in conjunction with the PCCV polar crane main and auxiliary hoists and the spent fuel cask handling crane main hoist during critical load handling operations meet design requirements.

3. The OHLHS is equipped with mechanical and electrical limit devices to disengage power to the motors as the load hook approaches its travel limits, to prevent damage to other components when continued operation would potentially damage the OHLHS or safety-related SSCs.

4. The control system includes safety devices which assure that the OHLHS returns to or maintains a secure holding position of critical loads in the event of a system fault.

2.7.6.5.2 Inspections, Tests, Analyses, and Acceptance Criteria

Table 2.7.6.5-1 describes the ITAAC for the OHLHS.

Table 2.7.6.5-1 Overhead Heavy Load Handling System Inspections, Tests, Analyses, and Acceptance Criteria (Sheet 1 of 5)

Design Commitment	Inspections, Tests, Analyses	Acceptance Criteria
1. The functional arrangement of the OHLHS is as described in the Design Description of Subsection 2.7.6.5.1.	1. Inspection of the as-built OHLHS will be performed.	1. The as-built OHLHS conforms to the functional arrangement as described in the Design Description of Subsection 2.7.6.5.1.
2.a The OHLHS is a seismic Category II system and does not interact with seismic Category I SSCs during or following an SSE.	2.a A combination of inspection and analyses of the as-built seismic Category II OHLHS will be performed.	2.a A report exists and concludes that the as-built seismic Category II OHLHS equipment does not interact with seismic Category I SSCs during or following an SSE.
2.b The polar crane has a seismic restraint system that prevents derailment of either the hoist trolley or the main bridge box girders during or following an SSE.	2.b A combination of inspections, test and analyses of the as-built polar crane seismic restraint system will be performed.	2.b A report exists and concludes that the as-built polar crane seismic restraint system prevents derailment of either the hoist trolley or the main bridge box girders during or following an SSE.

Table 2.7.6.5-1 Overhead Heavy Load Handling System Inspections, Tests, Analyses, and Acceptance Criteria (Sheet 2 of 5)

Design Commitment	Inspections, Tests, Analyses	Acceptance Criteria
2.c.i The PCCV polar crane main and auxiliary hoists meet requirements of single-failure-proof cranes.	2.c.i A combination of inspection, tests and analyses will be performed on the as-built polar crane main and auxiliary hoists to verify they are single-failure-proof. The PCCV polar crane main and auxiliary hoists: 1. reeving system design precludes a load drop in the event of a single rope failure. 2. are equipped with at least two holding brakes. 3. will be tested at a minimum of 100% of rated load in accordance with ASME NOG-1 Full-Load Test. 4. will be tested at a minimum of 125% of rated load in accordance with ASME NOG-1 Rated Load Test. 5. will be no-load tested to include verification of limit switch, interlock and stop settings. 6. critical welds will be subject to non-destructive examination (NDE) in accordance with ASME NOG-1.	2.c.i A report exists and concludes that the as-built PCCV polar crane main and auxiliary hoists are single-failure-proof. The as-built PCCV polar crane main and auxiliary hoists: 1. can tolerate a single reeving system rope failure without load drop 2. are equipped with two holding brakes, each of which are set and rated at a minimum torque of 125 % of rated hoisting torque at the point of brake application. 3. can hold and operate with a load of at least 100% of rated load. 4. can lift, transport, lower, stop and hold a test load of at least 125% of rated load. Each polar crane hoist holding brake is capable of stopping and holding a minimum of 125% rated load. 5. limit switches, interlocks and stops are set in accordance with design requirements. 6. critical welds meet ASME NOG-1 criteria for NDE.

Table 2.7.6.5-1 Overhead Heavy Load Handling System Inspections, Tests, Analyses, and Acceptance Criteria (Sheet 3 of 5)

Design Commitment	Inspections, Tests, Analyses	Acceptance Criteria
2.c.ii The spent fuel cask handling crane main hoist meets requirements of single-failure-proof cranes.	2.c.ii A combination of inspection, tests and analyses will be performed on the as-built spent fuel cask handling crane main hoist to verify it is single-failure-proof. The spent fuel cask handling crane main hoist: 1. reeving system design precludes a load drop in the event of a single rope failure. 2. is equipped with at least two holding brakes. 3. will be tested at a minimum of 100% of rated load in accordance with ASME NOG-1 Full-Load Test. 4. will be tested at a minimum of 125% of rated load in accordance with ASME NOG-1 Rated Load Test. 5. will be no-load tested to include verification of limit switch, interlock and stop settings. 6. critical welds will be subject to non-destructive examination (NDE) in accordance with ASME NOG-1.	2.c.ii A report exists and concludes that the as-built spent fuel cask handling crane main hoist is single-failure-proof. The as-built spent fuel cask handling crane main hoist: 1. can tolerate a single reeving system rope failure without load drop 2. is equipped with two holding brakes, each of which are set and rated at a minimum torque of 125 % of rated hoisting torque at the point of brake application. 3. can hold and operate with a load of at least 100% of rated load. 4. can lift, transport, lower, stop and hold a test load of at least 125% of rated load. Each polar crane hoist holding brake is capable of stopping and holding a minimum of 125% rated load. 5. limit switches, interlocks and stops are set in accordance with design requirements. 6. critical welds meet ASME NOG-1 criteria for NDE.

Table 2.7.6.5-1 Overhead Heavy Load Handling System Inspections, Tests, Analyses, and Acceptance Criteria (Sheet 4 of 5)

Design Commitment	Inspections, Tests, Analyses	Acceptance Criteria
2.d Special lifting devices and slings used in conjunction with the PCCV polar crane main and auxiliary hoists and the spent fuel cask handling crane main hoist during critical load handling operations meet design requirements.	2.d A combination of inspection, tests and analyses will be performed on the as-built special lifting devices and slings used in conjunction with the PCCV polar crane main and auxiliary hoists and the spent fuel cask handling crane main hoist.	2.d.i A report exists and concludes that the as-built special lifting devices and slings used in conjunction with the PCCV polar crane main and auxiliary hoists and the spent fuel cask handling crane main hoist during critical load handling operations have dual load paths or double safety factors. 2.d.ii As-built special lifting devices used in conjunction with the PCCV polar crane main and auxiliary hoists and spent fuel cask handling crane main hoist respectively can sustain in a 150% of rated load test for a minimum of 10 minutes. 2.d.iii After the 150% load test, non-destructive examination of critical welds of as-built special lifting devices used in conjunction with the PCCV polar crane main and auxiliary hoists and spent fuel cask handling crane main hoist respectively satisfy ASME requirements.
3. The OHLHS is equipped with mechanical and electrical limit devices to disengage power to the motors as the load hook approaches its travel limits, to prevent damage to other components when continued operation would potentially damage the OHLHS or safety-related SSCs.	3. Tests of the as-built OHLHS mechanical and electrical limit devices to disengage power to the motors as the load hook approaches its travel limits will be performed.	3. The as-built OHLHS is equipped with mechanical and electrical limit devices to disengage power to the motors as the load hook approaches its travel limits or safety-related SSCs.

Table 2.7.6.5-1 Overhead Heavy Load Handling System Inspections, Tests, Analyses, and Acceptance Criteria (Sheet 5 of 5)

Design Commitment	Inspections, Tests, Analyses	Acceptance Criteria
4. The control system includes safety devices which assure that the OHLHS returns to or maintains a secure holding position of critical loads in the event of a system fault.	4. Tests of the as-built OHLHS control system to assure that the as-built OHLHS returns to or maintains a secure holding position of critical loads in the event of a system fault will be performed.	4. The as-built control system includes safety devices which assure that the as-built OHLHS returns to or maintains a secure holding position of critical loads in the event of a system fault.

2.7.6.6 Process Effluent Radiation Monitoring and Sampling System (PERMS)

2.7.6.6.1 Design Description

The purpose and functions of the process effluent radiation monitoring and sampling system (PERMS) are:

- Sample, measure, control, and record the radioactivity levels of selected process streams within the plant and effluent streams released into the environment
- Activate alarms and control releases of radioactivity
- Provide data to keep doses to workers ALARA
- Provide process data to support plant operation

The process and effluent radiological monitoring and sampling system is used to verify that releases to the environment are within the dose limit and the numerical guidelines of applicable NRC regulations.

The main control room (MCR) outside air intake radiation monitors are safety-related, while the remainder of the PERMS is non safety-related.

The safety function of the MCR outside air intake radiation monitors is that the detection of radioactivity levels in the stream exceeding the predetermined setpoints automatically activates signals to start the main control room isolation, and activates an alarm in the MCR for operator actions.

1. The functional arrangement of the PERMS is as described in the Design Description of Subsection 2.7.6.6.1 and in Table 2.7.6.6-1.

2. The seismic Category I radiation monitors identified in Table 2.7.6.6-1 can withstand seismic design basis loads without loss of safety function.

3.a The Class 1E radiation monitors identified in Table 2.7.6.6-1 are powered from their respective Class 1E division.

3.b Separation is provided between redundant divisions of PERMS Class 1E cables, and between Class 1E cables and non-Class 1E cables.

4. Each redundant division of the Class 1E radiation monitors identified in Table 2.7.6.6-1 is physically separated from the other divisions.

5. Data and alarms, including power failure alarms, from the Class 1E monitors identified in Table 2.7.6.6-1 are provided in the MCR.

2.7.6.6.2 Inspections, Tests, Analyses, and Acceptance Criteria

Table 2.7.6.6-2 describes the ITAAC for process effluent radiological monitoring and sampling system.

Table 2.7.6.6-1 Process Effluent Radiation Monitoring and Sampling System Equipment Characteristics (Sheet 1 of 2)

PERMS Monitor Name	Detector Number	Safety Related	Seismic Category I	Class 1E/ Harsh	Location
Containment Radiation Gas	RMS-RE-041	No	No	No/No	R/B
Containment Radiation Particulate	RMS-RE-040	No	Yes	No/No	R/B
Containment Low Volume Purge Radiation Gas	RMS-RE-023	No	No	No/No	R/B
Containment Exhaust Radiation Gas	RMS-RE-022	No	No	No/No	R/B
High Sensitivity Main Steam Line (N-16ch.)	RMS-RE-065A,B, 066A,B, 067A,B, 068A,B	No	No	No/No	R/B
Main Steam Line	RMS-RE-087, 088, 089, 090	No	No	No/No	R/B
Gaseous Radwaste Discharge	RMS-RE-072	No	No	No/No	A/B
Main Control Room Outside Air Intake Gas Radiation	RMS-RE-084A,B	Yes	Yes	Yes/No	R/B
Main Control Room Outside Air Intake Iodine Radiation	RMS-RE-085A,B	Yes	Yes	Yes/No	R/B
Main Control Room Outside Air Intake Particulate Radiation	RMS-RE-083A,B	Yes	Yes	Yes/No	R/B
TSC Outside Air Intake Gas Radiation	RMS-RE-101	No	No	No/No	A/B
TSC Outside Air Intake Iodine Radiation	RMS-RE-102	No	No	No/No	A/B
TSC Outside Air Intake Particulate Radiation	RMS-RE-100	No	No	No/No	A/B
CCW Radiation	RMS-RE-056A,B	No	No	No/No	R/B
Auxiliary Steam Condensate Water Radiation	RMS-RE-057	No	No	No/No	A/B
Primary Coolant Radiation	RMS-RE-070	No	No	No/No	R/B
Turbine Building Floor Drain Radiation	RMS-RE-058	No	No	No/No	T/B
SG Blowdown Water Radiation	RMS-RE-055	No	No	No/No	R/B
SG Blowdown Return Water Radiation	RMS-RE-036	No	No	No/No	A/B
Plant Vent Radiation Gas (Normal Range)	RMS-RE-021A,B	No	No	No/No	R/B
Plant Vent Extended Radiation Gas (Accident Mid Range)	RMS-RE-080A	No	No	No/No	R/B
Plant Vent Extended Radiation Gas (Accident High Range)	RMS-RE-080B	No	No	No/No	R/B
Condenser vacuum pump exhaust line radiation (Normal Range)	RMS-RE-043A,B	No	No	No/No	T/B

Table 2.7.6.6-1 Process Effluent Radiation Monitoring and Sampling System Equipment Characteristics (Sheet 2 of 2)

PERMS Monitor Name	Detector Number	Safety Related	Seismic Category I	Class 1E/ Harsh	Location
Condenser vacuum pump exhaust line radiation (Accident Mid Range)	RMS-RE-081A	No	No	No/No	T/B
Condenser vacuum pump exhaust line radiation (Accident High Range)	RMS-RE-081B	No	No	No/No	T/B
GSS exhaust fan discharge line radiation (Normal Range)	RMS-RE-044A,B	No	No	No/No	T/B
GSS exhaust fan discharge line radiation (Accident Mid Range)	RMS-RE-082A	No	No	No/No	T/B
GSS exhaust fan discharge line radiation (Accident High Range)	RMS-RE-082B	No	No	No/No	T/B
Liquid Radwaste Discharge	RMS-RE-035	No	No	No/No	A/B
ESW Radiation	RMS-RE-074A,B,C,D	No	No	No/No	R/B

Table 2.7.6.6-2 Process Effluent Radiation Monitoring and Sampling System Inspections, Tests, Analyses, and Acceptance Criteria (Sheet 1 of 2)

Design Commitment	Inspections, Tests, Analyses	Acceptance Criteria
1. The functional arrangement of the PERMS is as described in the Design Description of Subsection 2.7.6.6.1 and in Table 2.7.6.6-1.	1. An inspection of the as-built PERMS will be performed.	1. The as-built PERMS conforms to the functional arrangement as described in the Design Description of Subsection 2.7.6.6.1 and in Table 2.7.6.6-1.
2. The seismic Category I radiation monitors identified in Table 2.7.6.6-1 can withstand seismic design basis loads without loss of safety function.	2.i Inspections will be performed to verify that the as-built seismic Category I radiation monitors, identified in Table 2.7.6.6-1, are located in a seismic Category I structure.	2.i The as-built seismic Category I radiation monitors identified in Table 2.7.6.6-1 are located in a seismic Category I structure.
	2.ii Type tests, analyses, or a combination of type tests and analyses of the seismic Category I radiation monitors identified in Table 2.7.6.6-1 will be performed using analytical assumptions, or will be performed under conditions, which bound the seismic design basis requirements.	2.ii A report exists and concludes that the seismic Category I radiation monitors identified in Table 2.7.6.6-1 can withstand seismic design basis loads without loss of safety function.
	2.iii Inspections and analyses will be performed to verify that the as-built seismic Category I radiation monitors identified in Table 2.7.6.6-1, including anchorages, are seismically bounded by the tested or analyzed conditions.	2.iii A report exists and concludes that the as-built seismic Category I radiation monitors identified in Table 2.7.6.6-1, including anchorages, are seismically bounded by the tested or analyzed conditions.
3.a The Class 1E radiation monitors identified in Table 2.7.6.6-1 are powered from their respective Class 1E division.	3.a A test will be performed on each division of the as-built Class 1E radiation monitors identified in Table 2.7.6.6-1 by providing a simulated test signal only in the Class 1E division under test.	3.a The simulated test signal exists at the as-built Class 1E radiation monitors, identified in Table 2.7.6.6-1 under test.

Table 2.7.6.6-2 Process Effluent Radiation Monitoring and Sampling System Inspections, Tests, Analyses, and Acceptance Criteria (Sheet 2 of 2)

Design Commitment	Inspections, Tests, Analyses	Acceptance Criteria
3.b Separation is provided between redundant divisions of PERMS Class 1E cables, and between Class 1E cables and non-Class 1E cables.	3.b Inspections of the as-built Class 1E divisional cables will be performed.	3.b Physical separation or electrical isolation is provided in accordance with RG 1.75, between the as-built PERMS cables of redundant Class 1E divisions and between Class 1E cables and non-Class 1E cables.
4. Each redundant division of the Class 1E radiation monitors identified in Table 2.7.6.6-1 is physically separated from the other divisions.	4. Inspections of the as-built Class 1E radiation monitors of the PERMS will be performed.	4. Each redundant division of the as-built Class 1E radiation monitors identified in Table 2.7.6.6-1 is physically separated from other divisions in accordance with RG 1.75.
5. Data and alarms, including power failure alarms, from the Class 1E monitors identified in Table 2.7.6.6-1 are provided in the MCR.	5. An inspection will be performed for retrievability of data and alarms in the as-built MCR.	5. The data and alarms, including power failure alarms, from the as-built Class 1E monitors identified in Table 2.7.6.6-1 can be retrieved in the as-built MCR.

2.7.6.7 Process and Post-accident Sampling System (PSS)

2.7.6.7.1 Design Description

The PSS contains equipment to collect samples of the various process fluids (liquid and gaseous) during normal and post-accident conditions to monitor various conditions using the collected and analyzed samples.

The PSS serves no safety function, and therefore has no safety design basis, except for providing containment isolation. The containment isolation function is described in Subsection 2.11.2.

1. The functional arrangement of the PSS is as described in the Design Description of Subsection 2.7.6.7.1 and in Table 2.7.6.7-2, and as shown in Figure 2.7.6.7-1.

2.a.i The ASME Code Section III components of the PSS identified in Table 2.7.6.7-1 are fabricated, installed, and inspected in accordance with ASME Code Section III requirements.

2.a.ii The ASME Code Section III components of the PSS identified in Table 2.7.6.7-1 are reconciled with the design requirements.

2.b.i The ASME Code Section III piping of the PSS, including supports, identified in Table 2.7.6.7-3, is fabricated, installed, and inspected in accordance with ASME Code Section III requirements.

2.b.ii The ASME Code Section III piping of the PSS, including supports, identified in Table 2.7.6.7-3 is reconciled with the design requirements.

3.a Pressure boundary welds in ASME Code Section III components identified in Table 2.7.6.7-1 meet ASME Code Section III requirements for non-destructive examination of welds.

3.b Pressure boundary welds in ASME Code Section III piping identified in Table 2.7.6.7-3 meet ASME Code Section III requirements for non-destructive examination of welds.

4.a The ASME Code Section III components, identified in Table 2.7.6.7-1, retain their pressure boundary integrity at their design pressure.

4.b The ASME Code Section III piping, identified in Table 2.7.6.7-3, retains its pressure boundary integrity at its design pressure.

5.a The seismic Category I equipment identified in Table 2.7.6.7-1 can withstand seismic design basis loads without loss of safety function.

5.b The seismic Category I piping, including supports, identified in Table 2.7.6.7-3 can withstand seismic design basis loads without a loss of its safety function.

6.a The Class 1E equipment identified in Table 2.7.6.7-1 as being qualified for a harsh environment can withstand the environmental conditions that would exist before, during, and following a design basis event without loss of safety function for the time required to perform the safety function.

6.b Class 1E equipment, identified in Table 2.7.6.7-1, is powered from its respective Class 1E division.

6.c Separation is provided between redundant divisions of PSS Class 1E cables, and between Class 1E cables and non-Class 1E cables.

7. Deleted.

8. The PSS provides the capability of obtaining reactor coolant and containment atmosphere samples.

9. The motor-operated valves, air-operated valves and check valves, identified in Table 2.7.6.7-1, perform an active safety function to change position as indicated in the table.

10.a Controls are provided in the MCR to open and close the remotely operated valves identified in Table 2.7.6.7-1.

10.b The remotely operated valves identified in Table 2.7.6.7-1 as having PSMS control perform an active safety function after receiving a signal from PSMS.

11. After loss of motive power, the remotely operated valves identified in Table 2.7.6.7-1 assume the indicated loss of motive power position.

12. Displays identified in Table 2.7.6.7-4 are provided in the MCR.

13. Displays and controls identified in Table 2.7.6.7-4 are provided in the RSC.

2.7.6.7.2 Inspections, Tests, Analyses, and Acceptance Criteria

Table 2.7.6.7-5 describes the ITAAC for process and post-accident sampling system.

The ITAAC associated with the PSS components, and piping that comprise a portion of the CIS are described in Table 2.11.2-2.

Table 2.7.6.7-1 Process and Post-accident Sampling System Equipment Characteristics

Equipment Name	Tag No.	ASME Code Section III Class	Seismic Category I	Remotely Operated Valve	Class 1E/ Qual. For Harsh Envir.	PSMS Control	Active Safety Function	Loss of Motive Power Position
Isolation valves on RHR down stream of containment spray and residual heat removal heat exchanger	PSS-MOV-052A,B,C,D	2	Yes	Yes	Yes / No	Remote Manual	Transfer Closed	As Is
Containment isolation valves inside CV on sample from RCS Hot Leg	PSS-MOV-013,023	2	Yes	Yes	Yes/Yes	Containment Isolation Phase A	Transfer Closed	As Is
Containment isolation valves outside containment on sample from RCS Hot Leg	PSS-MOV-031A,B	2	Yes	Yes	Yes/ No	Containment Isolation Phase A	Transfer Closed	As Is
Containment isolation valve outside CV on post-accident liquid sample return to containment sump	PSS-MOV-071	2	Yes	Yes	Yes/ No	Remote Manual	Transfer Closed	As Is
Containment isolation valve inside CV on post-accident liquid sample return to containment sump	PSS-VLV-072	2	Yes	No	— / —	—	Transfer Closed	—
Containment isolation valve inside CV on gas sample from Pressurizer	PSS-AOV-003	2	Yes	Yes	Yes/Yes	Containment Isolation Phase A	Transfer Closed	Closed
Containment isolation valve inside CV on liquid sample from Pressurizer	PSS-MOV-006	2	Yes	Yes	Yes/Yes	Containment Isolation Phase A	Transfer Closed	As Is
Containment isolation valves inside CV on sample from Accumulator	PSS-AOV-062A,B,C,D	2	Yes	Yes	Yes /Yes	Containment Isolation Phase A	Transfer Closed	Closed
Containment isolation valve outside CV on sample from Accumulator	PSS-AOV-063	2	Yes	Yes	Yes /No	Containment Isolation Phase A	Transfer Closed	Closed

Note: Dash (-) indicates not applicable

Table 2.7.6.7-2 Process and Post-accident Sampling System Location of the Equipment

System and Components	Location
Isolation valves on RHR downstream of containment spray and residual heat removal heat exchanger	Reactor Building
Containment isolation valves inside CV on sample from RCS Hot Leg	Containment
Containment isolation valves outside containment on sample from RCS Hot Leg	Reactor Building
Containment isolation valve outside CV on post-accident liquid sample return to containment sump	Reactor Building
Containment isolation valve inside CV on post-accident liquid sample return to containment sump	Containment
Containment isolation valve inside CV on gas sample from Pressurizer	Containment
Containment isolation valve inside CV on liquid sample from Pressurizer	Containment
Containment isolation valves inside CV on sample from Accumulator	Containment
Containment isolation valve outside CV on sample from Accumulator	Reactor Building

Table 2.7.6.7-3 Process and Post-accident Sampling System Piping Characteristics

Pipe Line Name	ASME Code Section III Class	Seismic Category I
Accumulator sampling piping and valves from accumulator up to and including the outermost containment isolation valve PSS-AOV-063	2	Yes
Hot leg sampling piping and valves from hot leg up to and including the outermost containment isolation valve PSS-MOV-031A,B	2	Yes
Pressurizer liquid sampling piping and valves from hot leg up to and including the outermost containment isolation valve PSS-MOV-031A,B	2	Yes
Containment isolation valves PSS-MOV-071and PSS-VLV-072 and piping between them	2	Yes
RHS loop sampling piping and valves up to and including the valves PSS-MOV-052A,B,C,D	2	Yes

Table 2.7.6.7-4 Process and Post-accident Sampling System Equipment Alarms, Displays, and Control Functions

Equipment/Instrument Name	MCR/RSC Alarm	MCR Display	MCR/RSC Control Function	RSC Display
Containment isolation valve inside CV on gas sample from Pressurizer (PSS-AOV-003)	No	Yes	Yes	Yes
Containment isolation valve inside CV on liquid sample from Pressurizer (PSS-MOV-006)	No	Yes	Yes	Yes
Containment isolation valves inside CV on sample from RCS Hot Leg (PSS-MOV-013, 023)	No	Yes	Yes	Yes
Containment isolation valves outside containment on sample from RCS Hot Leg (PSS-MOV-031 A,B)	No	Yes	Yes	Yes
Containment isolation valves inside CV on sample from Accumulator (PSS-AOV-062A,B,C,D)	No	Yes	Yes	Yes
Containment isolation valve outside CV on sample from Accumulator (PSS-AOV-063)	No	Yes	Yes	Yes
Containment isolation valve outside CV on post-accident liquid sample return to containment sump (PSS-MOV-071)	No	Yes	Yes	Yes
Isolation valves on RHR down stream of containment spray and residual heat removal heat exchanger (PSS-MOV-052A,B,C,D)	No	Yes	Yes	Yes

Table 2.7.6.7-5 Process and Post-accident Sampling System Inspections, Tests, Analyses, and Acceptance Criteria (Sheet 1 of 7)

Design Commitment	Inspections, Tests, Analyses	Acceptance Criteria
1. The functional arrangement of the PSS is as described in the Design Description of Subsection 2.7.6.7.1 and in Table 2.7.6.7-2 and as shown in Figure 2.7.6.7-1.	1. Inspection of the as-built PSS will be performed.	1. The as-built PSS conforms to the functional arrangement as described in Design Description of Subsection 2.7.6.7.1 and in Table 2.7.6.7-2 and as shown in Figure 2.7.6.7-1.
2.a.i The ASME Code Section III components of the PSS identified in Table 2.7.6.7-1 are fabricated, installed, and inspected in accordance with ASME Code Section III requirements.	2.a.i Inspection of the as-built ASME Code Section III components of the PSS identified in Table 2.7.6.7-1 will be performed.	2.a.i The ASME Code Section III data report(s) (certified, when required by ASME Code) and inspection reports (including N-5 Data Reports where applicable) exist and conclude that the as-built ASME Code Section III components of the PSS identified in Table 2.7.6.7-1 are fabricated, installed, and inspected in accordance with ASME Code Section III requirements.
2.a.ii The ASME Code Section III components of the PSS identified in Table 2.7.6.7-1 are reconciled with the design requirements.	2.a.ii A reconciliation analysis of the components identified in Table 2.7.6.7-1 using as-designed and as-built information and ASME Code Section III design report(s) (NCA-3550) will be performed.	2.a.ii The ASME Code Section III design report(s) (certified, when required by ASME Code) exist and conclude that design reconciliation has been completed in accordance with the ASME Code, for the as-built ASME Code Section III components of the PSS identified in Table 2.7.6.7-1. The report documents the results of the reconciliation analysis.

Table 2.7.6.7-5 Process and Post-accident Sampling System Inspections, Tests, Analyses, and Acceptance Criteria (Sheet 2 of 7)

Design Commitment	Inspections, Tests, Analyses	Acceptance Criteria
2.b.i The ASME Code Section III piping of the PSS, including supports, identified in Table 2.7.6.7-3, is fabricated, installed, and inspected in accordance with ASME Code Section III requirements	2.b.i Inspection of the as-built ASME Code Section III piping of the PSS, including supports, identified in Table 2.7.6.7-3, will be performed.	2.b.i The ASME Code Section III data report(s) (certified, when required by ASME Code) and inspection reports (including N-5 Data Reports where applicable) exist and conclude that the as-built ASME Code Section III piping of the PSS, including supports, identified in Table 2.7.6.7-3 is fabricated, installed, and inspected in accordance with ASME Code Section III requirements.
2.b.ii The ASME Code Section III piping of the PSS, including supports, identified in Table 2.7.6.7-3 is reconciled with the design requirements	2.b.ii A reconciliation analysis of the piping of the PSS, including supports, identified in Table 2.7.6.7-3, using as-designed and as-built information and ASME Code Section III design report(s) (NCA-3550) will be performed.	2.b.ii The ASME Code Section III design report(s) (certified when required by ASME Code) exist and conclude that design reconciliation has been completed in accordance with the ASME Code, for the as-built ASME Code Section III piping of the PSS, including supports, identified in Table 2.7.6.7-3. The report documents the results of the reconciliation analysis.
3.a Pressure boundary welds in ASME Code Section III components identified in Table 2.7.6.7-1 meet ASME Code Section III requirements for non-destructive examination of welds.	3.a Inspections of the as-built pressure boundary welds identified in ASME Code Section III components identified in Table 2.7.6.7-1, will be performed in accordance with the ASME Code Section III.	3.a The ASME Code Section III code reports exist and conclude that the ASME Code Section III requirements are met for non-destructive examination of the as-built pressure boundary welds in ASME Code Section III components identified in Table 2.7.6.7-1.

Table 2.7.6.7-5 Process and Post-accident Sampling System Inspections, Tests, Analyses, and Acceptance Criteria (Sheet 3 of 7)

Design Commitment	Inspections, Tests, Analyses	Acceptance Criteria
3.b Pressure boundary welds in ASME Code Section III piping identified in Table 2.7.6.7-3 meet ASME Code Section III requirements for non-destructive examination of welds.	3.b Inspections of the as-built pressure boundary welds in ASME Code Section III piping identified in Table 2.7.6.7-3 will be performed in accordance with the ASME Code Section III.	3.b The ASME Code Section III code reports exist and conclude that the ASME Code Section III requirements are met for non-destructive examination of the as-built pressure boundary welds in ASME Code Section III piping identified in Table 2.7.6.7-3.
4.a The ASME Code Section III components, identified in Table 2.7.6.7-1, retain their pressure boundary integrity at their design pressure.	4.a A hydrostatic test will be performed on the as-built components, identified in Table 2.7.6.7-1, required by the ASME Code Section III to be hydrostatically tested.	4.a ASME Code Data Report(s) exist and conclude that the results of the hydrostatic test of the as-built components identified in Table 2.7.6.7-1 as ASME Code Section III conform to the requirements of the ASME Code Section III.
4.b The ASME Code Section III piping, identified in Table 2.7.6.7-3, retains its pressure boundary integrity at its design pressure.	4.b A hydrostatic test will be performed on the as-built piping, identified in Table 2.7.6.7-3, required by the ASME Code Section III to be hydrostatically tested.	4.b ASME Code Data Report(s) exist and conclude that the results of the hydrostatic tests of the as-built piping identified in Table 2.7.6.7-3 as ASME Code Section III conform to the requirements of the ASME Code Section III.
5.a The seismic Category I equipment identified in Table 2.7.6.7-1 can withstand seismic design basis loads without loss of safety function.	5.a.i Inspections will be performed to verify that the as-built seismic Category I equipment identified in Table 2.7.6.7-1 is located in a seismic Category I structure.	5.a.i The as-built seismic Category I equipment identified in Table 2.7.6.7-1 is located in a seismic Category I structure(s).
	5.a.ii Type tests, analyses, or a combination of type tests and analyses of the seismic Category I equipment identified in Table 2.7.6.7-1 will be performed using analytical assumptions, or will be performed under conditions, which bound the seismic design basis requirements.	5.a.ii A report exists and concludes that the seismic Category I equipment identified in Table 2.7.6.7-1 can withstand seismic design basis loads without loss of safety function.

Table 2.7.6.7-5 Process and Post-accident Sampling System Inspections, Tests, Analyses, and Acceptance Criteria (Sheet 4 of 7)

Design Commitment	Inspections, Tests, Analyses	Acceptance Criteria
	5.a.iii Inspections and analyses will be performed to verify that the as-built seismic Category I equipment identified in Table 2.7.6.7-1, including anchorages, is seismically bounded by the tested or analyzed conditions.	5.a.iii A report exists and concludes that the as-built seismic Category I equipment identified in Table 2.7.6.7-1, including anchorages, is seismically bounded by the tested or analyzed conditions.
5.b The seismic Category I piping, including supports, identified in Table 2.7.6.7-3 can withstand seismic design basis loads without a loss of its safety function.	5.b.i Inspections will be performed to verify that the as-built seismic Category I piping, including supports, identified in Table 2.7.6.7-3 is supported by a seismic Category I structure(s).	5.b.i The as-built seismic Category I piping, including supports, identified in Table 2.7.6.7-3 is supported by a seismic Category I structure(s).
	5.b.ii Inspections and analyses will be performed to verify that the as-built seismic Category I piping, including supports, identified in Table 2.7.6.7-3 can withstand seismic design basis loads without a loss of its safety function.	5.b.ii A report exists and concludes that the as-built seismic Category I piping, including supports, identified in Table 2.7.6.7-3 can withstand seismic design basis loads without a loss of its safety function.
6.a The Class 1E equipment identified in Table 2.7.6.7-1 as being qualified for a harsh environment can withstand the environmental conditions that would exist before, during, and following a design basis accident without loss of safety function for the time required to perform the safety function.	6.a.i Type tests or a combination of type tests and analyses using the design environmental conditions, or under the conditions which bound the design environmental conditions, will be performed on the Class 1E equipment identified in Table 2.7.6.7-1 as being qualified for a harsh environment.	6.a.i A report exists and concludes that the Class 1E equipment identified in Table 2.7.6.7-1 as being qualified for a harsh environment withstands the environmental conditions that would exist before, during, and following a design basis accident without loss of safety function, for the time required to perform the safety function.

Table 2.7.6.7-5 Process and Post-accident Sampling System Inspections, Tests, Analyses, and Acceptance Criteria (Sheet 5 of 7)

Design Commitment	Inspections, Tests, Analyses	Acceptance Criteria
	6.a.ii Inspection will be performed of the as-built Class 1E equipment identified in Table 2.7.6.7-1 as being qualified for a harsh environment and the associated wiring, cables, and terminations located in a harsh environment.	6.a.ii The as-built Class 1E equipment and the associated wiring, cables, and terminations identified in Table 2.7.6.7-1 as being qualified for a harsh environment are bounded by type tests, or a combination of type tests and analyses.
6.b Class 1E equipment, identified in Table 2.7.6.7-1 is powered from its respective Class 1E division.	6.b A test will be performed on each division of the as-built Class 1E equipment identified in Table 2.7.6.7-1 by providing a simulated test signal only in the Class 1E division under test.	6.b The simulated test signal exists at the as-built Class 1E equipment, identified in Table 2.7.6.7-1 under test.
6.c Separation is provided between redundant divisions of PSS Class 1E cables, and between Class 1E cables and non-Class 1E cables.	6.c Inspections of the as-built Class 1E divisional cables will be performed.	6.c Physical separation or electrical isolation is provided in accordance with RG 1.75, between the as-built cables of redundant PSS Class 1E divisions and between Class 1E cables and non-Class 1E cables.
7. Deleted.	7. Deleted.	7. Deleted.
8. The PSS provides the capability of obtaining reactor coolant and containment atmosphere samples.	8. Tests of the as-built system will be performed to obtain samples of the reactor coolant and containment atmosphere.	8. The as-built PSS obtains reactor coolant and containment atmosphere samples.

Table 2.7.6.7-5 Process and Post-accident Sampling System Inspections, Tests, Analyses, and Acceptance Criteria (Sheet 6 of 7)

Design Commitment	Inspections, Tests, Analyses	Acceptance Criteria
9. The motor-operated valves, air-operated valves and check valves, identified in Table 2.7.6.7-1 as having an active safety function perform an active safety function to change position as indicated in the table.	9.i Type tests or a combination of type tests and analyses of the motor-operated valves and air-operated valves identified in Table 2.7.6.7-1 as having an active safety function will be performed that demonstrate the capability of the valve to operate under its design conditions.	9.i A report exists and concludes that each motor-operated valve and air-operated valve identified in Table 2.7.6.7-1 as having an active safety function changes position as identified in Table 2.7.6.7-1 under design conditions.
	9.ii Tests of the as-built motor-operated valves and air-operated valves identified in Table 2.7.6.7-1 as having an active safety function will be performed under preoperational flow, differential pressure, and temperature conditions.	9.ii Each as-built motor-operated valve and air-operated valve identified in Table 2.7.6.7-1 as having an active safety function changes position as identified in Table 2.7.6.7-1 under preoperational test conditions.
	9.iii Inspections will be performed of the as-built motor-operated and air operated valves identified in Table 2.7.6.7-1 as having an active safety function.	9.iii Each as-built motor-operated and air-operated valve identified in Table 2.7.6.7-1 as having an active safety function is bounded by the type tests, or a combination of type tests and analyses.
	9. iv Tests of the as-built check valves identified in Table 2.7.6.7-1 as having an active safety function will be performed under preoperational test pressure, temperature, and fluid flow conditions.	9. iv Each as-built check valve identified in Table 2.7.6.7-1 as having an active safety function changes position as indicated in Table 2.7.6.7-1 under preoperational test conditions.
10.a Controls are provided in the MCR to open and close the remotely operated valves identified in Table 2.7.6.7-1.	10.a Tests will be performed on the as-built remotely operated valves identified in Table 2.7.6.7-1 using the controls in the as-built MCR.	10.a Controls in the as-built MCR open and close the as-built remotely operated valves identified in Table 2.7.6.7-1.

Table 2.7.6.7-5 Process and Post-accident Sampling System Inspections, Tests, Analyses, and Acceptance Criteria (Sheet 7 of 7)

Design Commitment	Inspections, Tests, Analyses	Acceptance Criteria
10.b The remotely operated valves identified in Table 2.7.6.7-1 as having PSMS control perform an active safety function after receiving a signal from PSMS.	10.b Tests will be performed on the as-built remotely operated valves identified in Table 2.7.6.7-1 as having PSMS control using simulated signals.	10.b The as-built remotely operated valves identified in Table 2.7.6.7-1 as having PSMS control, perform the active function identified in the table after receiving a simulated signal.
11. After loss of motive power, the remotely operated valves identified in Table 2.7.6.7-1 assume the indicated loss of motive power position.	11. Tests of the as-built remotely operated valves identified in Table 2.7.6.7-1 will be performed under the conditions of loss of motive power.	11. Upon loss of motive power, each as-built remotely operated valve identified in Table 2.7.6.7-1 assumes the indicated loss of motive power position.
12. Displays identified in Table 2.7.6.7-4 are provided in the MCR.	12. Inspection will be performed for retrievability of the displays identified in Table 2.7.6.7-4 in the as-built MCR.	12. Displays identified in Table 2.7.6.7-4 can be retrieved in the as-built MCR.
13. Displays, and controls identified in Table 2.7.6.7-4 are provided in the RSC.	13.i Inspection will be performed for retrievability of the displays identified in Table 2.7.6.7-4 in the as-built RSC.	13.i Displays identified in Table 2.7.6.7-4 can be retrieved in the as-built RSC.
	13.ii Tests of the as-built RSC control functions identified in Table 2.7.6.7-4 will be performed.	13.ii Controls in the as-built RSC operate the as-built equipment identified in Table 2.7.6.7-4 with an RSC control function.

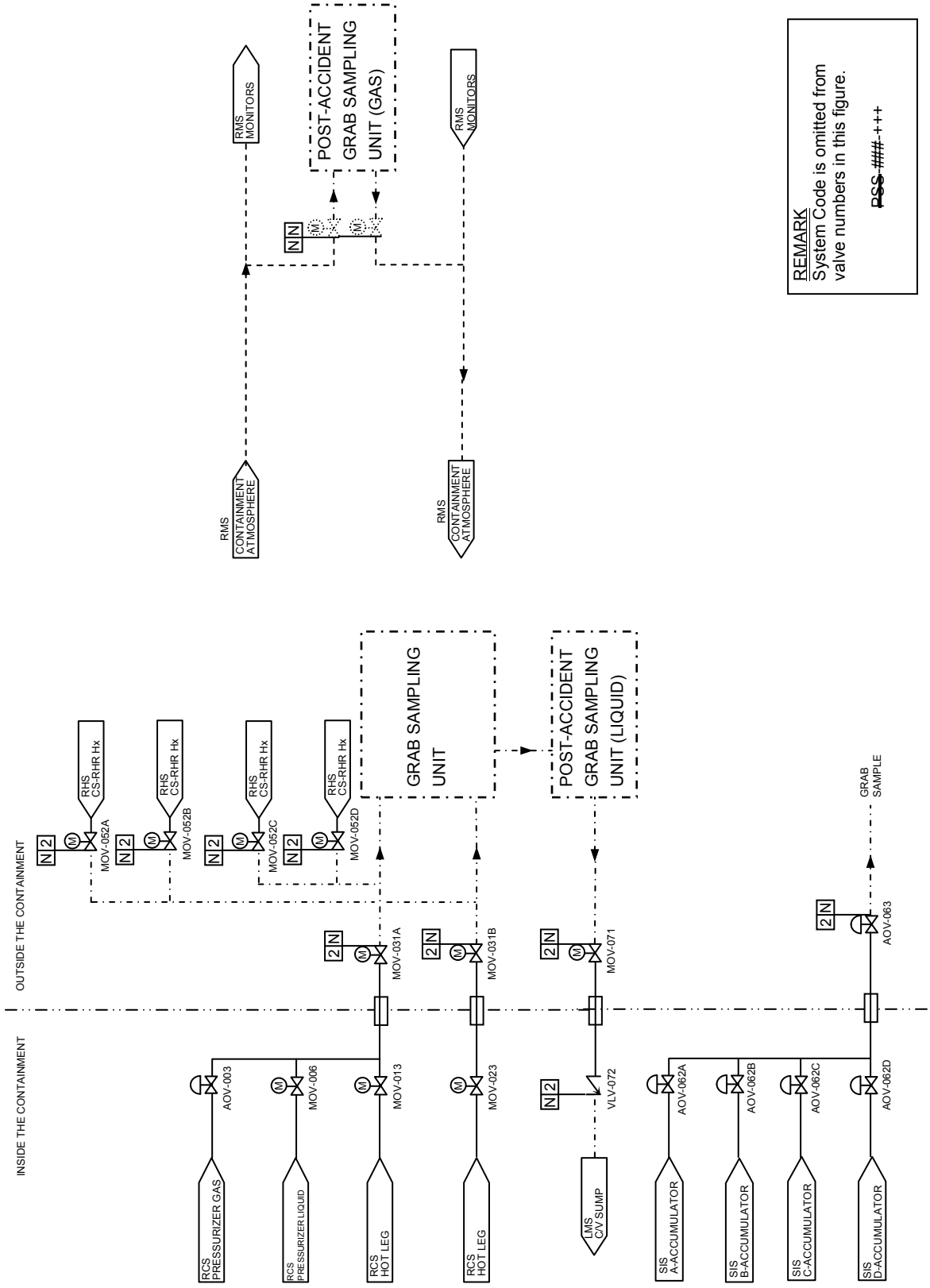

Figure 2.7.6.7-1 Process and Post-accident Sampling System

2.7.6.8 Equipment and Floor Drainage Systems

2.7.6.8.1 Design Description

The equipment and floor drainage systems are non safety-related systems with the exception of the isolation valves in the drainage piping from engineered safety features (ESF) equipment rooms. The equipment and floor drainage systems collect liquid waste from equipment and floor drains in the containment vessel (C/V), the auxiliary building (A/B), the reactor building (R/B), the power source building (PS/B), the turbine building (T/B), and the access building (AC/B), separate the contaminated effluents and transfer them to the processing and disposal systems. Radioactive contamination in the T/B sump is detected by a radiation monitor in the sump discharge and alarmed in the main control room.

The drain systems from ESF equipment rooms are designed to detect a flooded condition and to prevent flooding due to backflow by the virtue of a difference in elevation of the ESF equipment rooms and the collection sump. Additionally, isolation valves are provided on the ESF equipment rooms drainage piping in order to protect against flooding due to backflow. A common alarm in the main control room is provided for indication of a flooded condition.

1. The functional arrangement of the equipment and floor drainage systems is as described in the Design Description of Subsection 2.7.6.8.1, and as shown in Figure 2.7.6.8-1.

2. Alarms identified in Subsection 2.7.6.8.1 are provided in the MCR.

3. Flow from the T/B sump is isolated when the T/B sump discharge radiation monitor setpoint is reached.

4. The seismic Category I drain isolation valves from the ESF equipment rooms identified in Figure 2.7.6.8-1 can withstand seismic design basis loads without loss of safety function.

5.a Deleted.

5.b Deleted.

6.a The ASME Code Section III drain isolation valves from the ESF equipment rooms identified in Figure 2.7.6.8-1 are fabricated, installed, and inspected in accordance with ASME Code Section III requirements.

6.b The ASME Code Section III drain isolation valves from the ESF equipment rooms identified in Figure 2.7.6.8-1 are reconciled with the design requirements.

2.7.6.8.2 Inspections, Tests, Analyses, and Acceptance Criteria

Table 2.7.6.8-1 describes the ITAAC for the equipment and floor drainage systems.

Table 2.7.6.8-1 Equipment and Floor Drainage Systems Inspections ,Tests , Analyses and Acceptance Criteria (Sheet 1 of 2)

Design Commitment	Inspections, Tests, Analyses	Acceptance Criteria
1. The functional arrangement of the equipment and floor drainage systems is as described in the Design Description of Subsection 2.7.6.8.1, and as shown in Figure 2.7.6.8-1.	1. Inspection of the as-built equipment and floor drainage systems will be performed.	1. The as-built equipment and floor drainage systems conform to the functional arrangement as described in the Design Description of Subsection 2.7.6.8.1, and as shown in Figure 2.7.6.8-1.
2. Alarms identified in Subsection 2.7.6.8.1 are provided in the MCR.	2. Inspection will be performed for retrievability of the alarms identified in Subsection 2.7.6.8.1 in the as-built MCR.	2. Alarms identified in Subsection 2.7.6.8.1 can be retrieved in the as-built MCR.
3. Flow from the T/B sump is isolated when the T/B sump discharge radiation monitor setpoint is reached.	3. A test will be performed on the as-built T/B sump discharge valve using a simulated signal.	3. Upon receipt of a simulated T/B sump discharge radiation monitor signal, the as-built T/B sump discharge valve closes.
4. The seismic Category I drain isolation valves from the ESF equipment rooms identified in Figure 2.7.6.8-1 can withstand seismic design basis loads without loss of safety function.	4.a Inspections will be performed to verify that the as-built seismic Category I ESF equipment rooms drain isolation valves identified in Figure 2.7.6.8-1 are located in a seismic Category I structure.	4.a The as-built seismic Category I ESF equipment rooms drain isolation valves identified in Figure 2.7.6.8-1 are located in a seismic Category I structure.
	4.b Type tests, analyses, or a combination of type tests and analyses of the seismic Category I ESF equipment rooms drain isolation valves identified in Figure 2.7.6.8-1 will be performed using analytical assumptions, or will be performed under conditions which bound the seismic design basis requirements.	4.b A report exists and concludes that the seismic Category I ESF equipment rooms drain isolation valves identified in Figure 2.7.6.8-1 can withstand seismic design basis loads without loss of safety function.

Table 2.7.6.8-1 Equipment and Floor Drainage Systems Inspections ,Tests , Analyses and Acceptance Criteria (Sheet 2 of 2)

Design Commitment	Inspections, Tests, Analyses	Acceptance Criteria
	4.c Inspections and analyses will be performed to verify that the as-built seismic Category I ESF equipment rooms drain isolation valves identified in Figure 2.7.6.8-1, including anchorages, are seismically bounded by the tested or analyzed conditions.	4.c A report exists and concludes that the as-built seismic Category I ESF equipment rooms drain isolation valves identified in Figure 2.7.6.8-1, including anchorages, are seismically bounded by the tested or analyzed conditions.
5.a Deleted.	5.a Deleted.	5.a Deleted.
5.b Deleted.	5.b Deleted.	5.b Deleted.
6.a The ASME Code Section III drain isolation valves from the ESF equipment rooms identified in Figure 2.7.6.8-1 are fabricated, installed, and inspected in accordance with ASME Code Section III requirements.	6.a Inspection of the as-built ASME Code Section III drain isolation valves from the ESF equipment rooms identified in Figure 2.7.6.8-1 will be performed.	6.a The ASME Code Section III data report(s) (certified, when required by ASME Code) and inspection reports (including N-5 Data Reports where applicable) exist and conclude that the as-built ASME Code Section III drain isolation valves from the ESF equipment rooms identified in Figure 2.7.6.8-1 are fabricated, installed, and inspected in accordance with ASME Code Section III requirements.
6.b The ASME Code Section III drain isolation valves from the ESF equipment rooms identified in Figure 2.7.6.8-1 are reconciled with the design requirements.	6.b A reconciliation analysis of the drain isolation valves from the ESF equipment rooms identified in Figure 2.7.6.8-1 using as-designed and as-built information and ASME Code Section III design report(s) (NCA-3550) will be performed.	6.b The ASME Code Section III design report(s) (certified, when required by ASME Code) exist and conclude that design reconciliation has been completed in accordance with the ASME Code, for the as-built ASME Code Section III drain isolation valves from the ESF equipment rooms identified in Figure 2.7.6.8-1. The report documents the results of the reconciliation analysis.

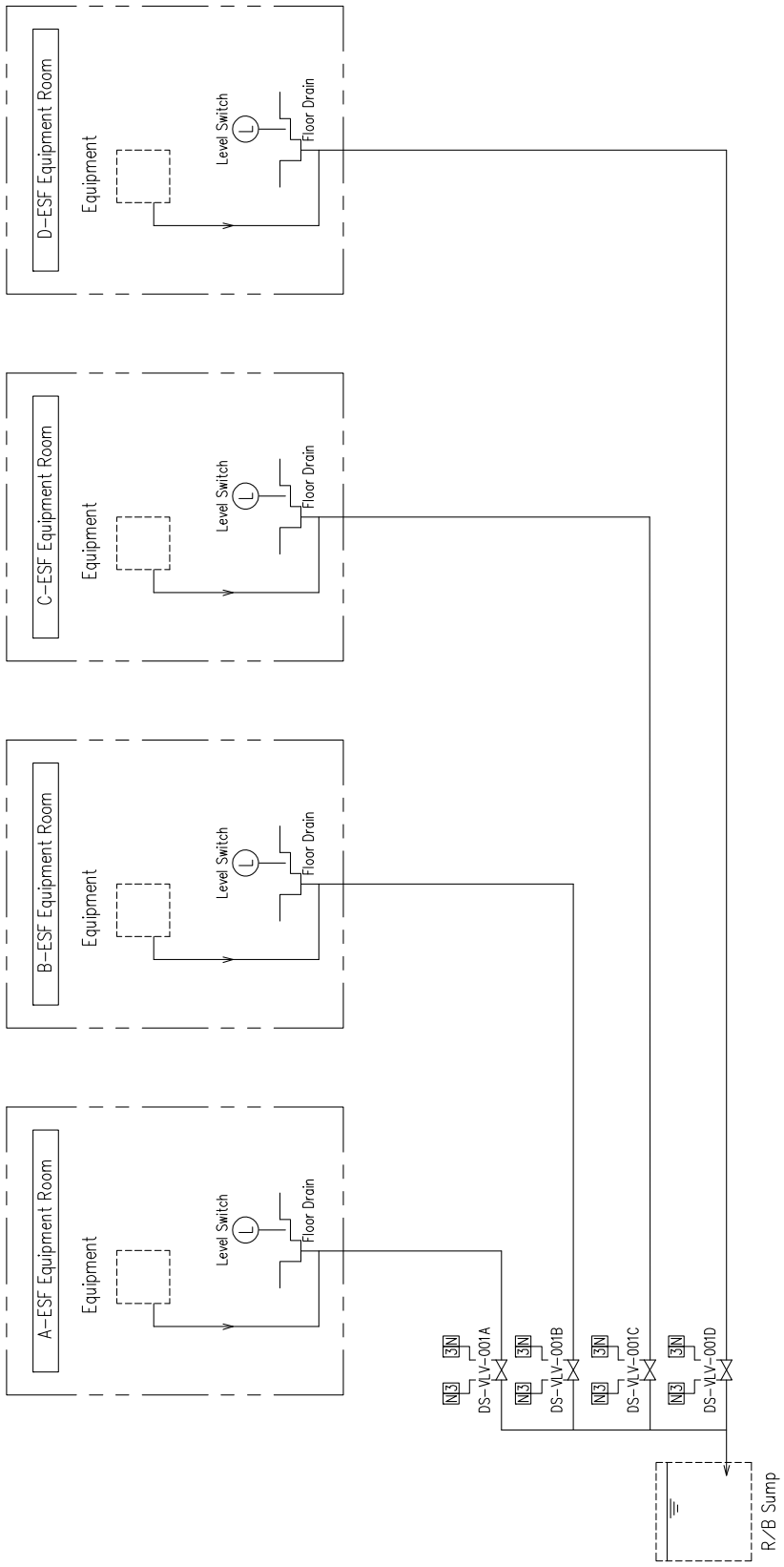

Figure 2.7.6.8-1 Equipment and Floor Drain System Flow Schematic

2.7.6.9 Fire Protection System (FPS)

2.7.6.9.1 Design Description

The fire protection system (FPS) detects and locates fires and provides the capability to extinguish or control the fire using fixed automatic and manual suppression systems, manual hose streams, and/or portable fire fighting equipment. Water is provided to hose stations for manual fire fighting in areas containing safe shutdown equipment following a safe shutdown earthquake. The FPS also supports the containment isolation function for piping penetrating the containment as described in Subsection 2.11.2. The FPS is classified as a non safety-related, non-seismic system with the exception of the containment isolation function.

The FPS consists of a number of fire detection and suppression subsystems including:

- Detection systems for early detection and notification of a fire occurrence. Fire detection systems are provided where required by the fire hazard analysis (FHA).
- A water supply system including the fire pumps, adequate fire water supply source, yard main, and interior distribution piping.
- Fixed automatic and manual fire suppression systems and equipment, including hydrants, standpipes, hose stations and portable fire extinguishers. Manual fire suppression capability is provided in areas of the plant containing safety-related equipment, including areas that have an automatic suppression system.

1. The functional arrangement of the FPS is as described in the Design Description of Subsection 2.7.6.9.1.

2. Individual fire detectors provide fire detection capability and initiate fire alarms in areas containing safety-related equipment.

3. There are two 100 percent capacity fire pumps: one pump is motor driven and one pump is diesel driven.

4.a Under safe-shutdown earthquake loading, the standpipe system remains functional in areas containing equipment required for safe-shutdown.

4.b Deleted

5. Deleted

6.a The FPS fire water supply is available as an alternative component cooling water source for severe accident prevention.

6.b The FPS fire water supply is available to the containment spray system and water injection to the reactor cavity for severe accident mitigation.

7. Deleted.

8. Displays identified in Table 2.7.6.9-1 are provided in the main control room (MCR).

2.7.6.9.2 Inspections, Tests, Analyses, and Acceptance Criteria

Table 2.7.6.9-2 describes the inspections, tests, analyses, and associated acceptance criteria for the FPS.

The ITAAC associated with the FPS equipment, components, and piping that comprise a portion of the CIS are described in Table 2.11.2-2.

Table 2.7.6.9-1 Fire Protection System MCR Displays

Equipment Name	Display	Control Function
Lead Fire Pump	Yes (Run Status)	Start
Secondary Fire Pump	Yes (Run Status)	Start

Table 2.7.6.9-2 Fire Protection System Inspections, Tests, Analyses, and Acceptance Criteria (Sheet 1 of 2)

Design Commitment	Inspections, Tests, Analyses	Acceptance Criteria
1. The functional arrangement of the FPS is as described in the Design Description of Subsection 2.7.6.9.1.	1. Inspections of the as-built FPS will be performed.	1. The as-built FPS conforms to the functional arrangement as described in the Design Description of Subsection 2.7.6.9.1.
2. Individual fire detectors provide fire detection capability and initiate fire alarms in areas containing safety-related equipment.	2.i Tests will be performed on the as-built individual fire detectors in areas containing safety-related equipment using a simulated signal.	2.i The as-built individual fire detectors initiate fire alarms in areas containing safety-related equipment.
	2.ii An inspection will be performed to verify that as-built fire detectors are installed in areas containing safety-related equipment.	2.ii The as-built fire detectors are installed in areas containing safety-related equipment.
3. There are two 100 percent capacity fire pumps: one pump is motor driven and one pump is diesel driven.	3.i An analysis will be performed to determine the 100 percent design flow rate for each fire pump.	3.i A report exists and concludes that each fire pump can provide the design flow rate to satisfy the demand of any automatic sprinkler system plus 500 gpm for fire hoses.
	3.ii Tests will be performed to confirm that the as-built fire pumps can provide the 100 percent design flow rate.	3.ii The as-built fire pumps are capable of achieving their 100 percent design flow rate.
	3.iii An inspection of the two as-built fire pumps will be performed.	3.iii The type and capacity of two as-built fire pumps are consistent with the design requirements of each pump, such that one pump is motor driven with 100% capacity and the other pump is diesel driven with 100% capacity.
4.a Under safe-shutdown earthquake loading, the standpipe system remains functional in areas containing equipment required for safe shutdown.	4.a An inspection will be performed of the as-built standpipe system as documented in a seismic design report.	4.a The seismic design report exists and concludes that the as-built standpipe system remains functional in areas containing equipment required for safe shutdown under safe-shutdown earthquake loading.
4.b Deleted	4.b Deleted	4.b Deleted
5. Deleted	5. Deleted	5. Deleted

Table 2.7.6.9-2 Fire Protection System Inspections, Tests, Analyses, and Acceptance Criteria (Sheet 2 of 2)

Design Commitment	Inspections, Tests, Analyses	Acceptance Criteria
6.a The FPS fire water supply is available as an alternative component cooling water source for severe accident prevention.	6.a Inspection will be performed of the as-built FPS fire water supply system.	6.a The as-built FPS fire water supply system is connected to component cooling water system shown in Figure 2.7.3.3-1 as an alternative component cooling water source for severe accident prevention.
6.b The FPS fire water supply is available to the containment spray system and water injection to the reactor cavity for severe accident mitigation.	6.b Inspection will be performed of the as-built FPS fire water supply system.	6.b The as-built FPS fire water supply system is connected to the containment spray system as shown in Figure 2.11.3-1 and water injection line to the reactor cavity as shown in Figure 2.11.2-1 for severe accident mitigation.
7. Deleted.	7. Deleted.	7. Deleted.
8. Displays identified in Table 2.7.6.9-1 are provided in the MCR.	8. Inspection will be performed for retrievability of the displays identified in Table 2.7.6.9-1 in the as-built MCR.	8. Displays identified in Table 2.7.6.9-1 can be retrieved in the as-built MCR.

2.7.6.10 Communication Systems

2.7.6.10.1 Design Description

The plant's communication systems are non safety-related. The communication systems provide for effective intra-plant and plant-to-offsite communications.

The following locations within the US-APWR facility contain communication system arrangements:

- Reactor building (R/B) and containment structure
- Turbine building (T/B)
- Power source building (PS/B)
- Auxiliary building (A/B)
- Access buildings (AC/B)

The US-APWR communication systems consist of the following physically independent systems:

- Public address system/page
- Telephone system
- Sound powered telephone system (SPTS)
- Plant radio system
- Offsite communications system including emergency communication systems

1. The functional arrangement of the communication systems is as described in the Design Description of Subsection 2.7.6.10.1.
2. The means exists for communications between the MCR and TSC and from the MCR and TSC to EOF, principal State and local emergency operations centers, and radiological field assessment teams.
3. The means exist for communications from the MCR and TSC to the NRC headquarters and regional office emergency operations centers (including establishment of the emergency response data system).
4. Deleted.

2.7.6.10.2 Inspections, Tests, Analyses, and Acceptance Criteria

Table 2.7.6.10-1 describes the inspections, tests, analyses, and associated acceptance criteria for the Communication Systems.

Table 2.12-1 describes the inspections, tests, analyses, and acceptance criteria for the Physical Security communications systems.

Table 2.7.6.10-1 Communication Systems Inspections ,Tests ,Analyses and Acceptance Criteria

Design Commitment	Inspections, Tests, Analyses	Acceptance Criteria
1. The functional arrangement of the communication systems is as described in the Design Description of Subsection 2.7.6.10.1.	1. Inspection of the as-built communication systems will be performed.	1. The as-built communication systems conform to the functional arrangement as described in the Design Description of Subsection 2.7.6.10.1.
2. The means exists for communications between the MCR and TSC and from the MCR and TSC to EOF, principal State and local emergency operations centers, and radiological field assessment teams.	2. A test of the as-built communication systems will be performed.	2. The as-built communications are established between the as-built MCR and TSC and from the as-built MCR and TSC to EOF, principal State and local emergency operations centers, and radiological field assessment teams.
3. The means exist for communications from the MCR and TSC to the NRC headquarters and regional office emergency operations centers (including establishment of the emergency response data system).	3. A test of the as-built communication systems will be performed.	3. The as-built communications are established from the as-built MCR and TSC to the NRC headquarters and regional office emergency operations centers, and an access port for the emergency response data system is provided.
4. Deleted.	4. Deleted.	4. Deleted.

2.7.6.11 Condensate Storage Facilities

This system does not require ITAAC.

2.7.6.12 Potable and Sanitary Water Systems (PSWS)

This system does not require ITAAC.

2.7.6.13 Area Radiation and Airborne Radioactivity Monitoring Systems (ARMS)

2.7.6.13.1 Design Description

2.7.6.13.1.1 Area Radiation Monitoring System

The design objectives of the area radiation monitoring system (ARMS) are:

- To record radiation levels in specific areas of the plant
- To warn of uncontrolled or inadvertent movement of radioactive material in the plant
- To provide local and remote indication of ambient gamma radiation and local and remote alarms at key points where substantial change in radiation levels might be of immediate importance to personnel in the area
- To furnish information for making radiation surveys
- To provide the capability to alarm and initiate a containment ventilation isolation signal in the event of abnormally high radiation inside the containment.
- To provide long-term post-accident monitoring

By meeting the above objectives, the ARMS aids plant personnel in keeping radiation exposures as low as reasonably achievable (ALARA).

The containment high range area monitors are safety-related, while the remainder of the ARMS is non safety-related. The safety function of ARMS is the isolation of the containment ventilation system when a high radiation alarm is given by the containment high range area monitors.

The ARMS monitors are located at selected locations throughout the plant to detect, indicate, and store radiation level information through their associated data processing module and, if necessary, annunciate abnormal radiation conditions. Area radiation monitors are installed in locations identified in Table 2.7.6.13-1.

The ARMS provides a continuous, direct indication or recording of radiation levels in the control room and provide alarms locally and in the main control room when radiation levels exceed set values.

2.7.6.13.1.2 Airborne Radioactivity Monitoring System

The purpose and function of the airborne radioactivity monitoring system is to measure and warn operators of excessive airborne radioactivity in the air exhausted from cubicles through HVAC exhaust ducts.

The monitors of the airborne radioactivity monitoring system are non safety-related, as such, the airborne radioactivity monitoring system has no safety function.

Airborne radioactivity monitor locations are within HVAC exhaust ducts which are installed in the radiological controlled areas as identified in Table 2.7.6.13-2.

1. The functional arrangement of the area radiation and airborne radioactivity monitoring systems is as described in the Design Description of Subsection 2.7.6.13.1, and in Tables 2.7.6.13-1 and 2.7.6.13-2.

2. The seismic Category I radiation monitors identified in Table 2.7.6.13-1 can withstand seismic design basis loads without loss of safety function.

3. The Class 1E radiation monitors identified in Table 2.7.6.13-1 as being qualified for a harsh environment can withstand the environmental conditions that would exist before, during, and following a design basis event without loss of safety function for the time required to perform the safety function.

4.a Class 1E radiation monitors identified in Table 2.7.6.13-1 are powered from their respective Class 1E division.

4.b Separation is provided between redundant divisions of Class 1E radiation monitor cables, and between Class 1E cables and non-Class 1E cables.

5. Each redundant division of Class 1E radiation monitors identified in Table 2.7.6.13-1 is physically separated from the other divisions.

6. Data and alarms, including power failure alarms, from the Class 1E radiation monitors identified in Table 2.7.6.13-1 are provided in the main control room.

2.7.6.13.2 Inspections, Tests, Analyses, and Acceptance Criteria

Table 2.7.6.13-3 describes the ITAAC for area radiation and airborne radioactivity monitoring systems.

Table 2.7.6.13-1 Area Radiation Monitoring System Equipment Characteristics

ARMS Monitor Name	Detector Number	Safety Related	Seismic Category I	Class 1E/ Harsh	Location
MCR Area Radiation	RMS-RE-001	No	No	No/No	R/B
Containment Air Lock Area Radiation	RMS-RE-002	No	No	No/No	C/V
Radio Chemical Lab. Area Radiation	RMS-RE-003	No	No	No/No	AC/B
SFP Area Radiation	RMS-RE-005	No	No	No/No	R/B
Nuclear Sampling Room Area Radiation	RMS-RE-006	No	No	No/No	AC/B
ICIS Area Radiation	RMS-RE-007	No	No	No/No	C/V
Waste management system Area Radiation	RMS-RE-008	No	No	No/No	A/B
TSC Area Radiation	RMS-RE-009	No	No	No/No	A/B
Containment High Range Area Radiation	RMS-RE-091A,B, 092A,B, 093A,B, 094A,B	Yes	Yes	Yes/Yes	C/V

Table 2.7.6.13-2 Airborne Radioactivity Monitoring System Equipment Characteristics

Radiation Gas Monitor Name	Detector Number	Safety Related	Seismic Category I	Class 1E/ Harsh	Location
Fuel Handling Area HVAC Radiation Gas	RMS-RE-049	No	No	No/No	A/B
Annulus and Safeguard Area HVAC Radiation Gas	RMS-RE-046	No	No	No/No	R/B
Reactor Building HVAC Radiation Gas	RMS-RE-048A	No	No	No/No	A/B
Auxiliary Building HVAC Radiation Gas	RMS-RE-048B	No	No	No/No	A/B
Sample and Lab Area HVAC Radiation Gas	RMS-RE-048C	No	No	No/No	A/B

Table 2.7.6.13-3 Area Radiation and Airborne Radioactivity Monitoring Systems Inspections, Tests, Analyses, and Acceptance Criteria (Sheet 1 of 3)

Design Commitment	Inspections, Tests, Analyses	Acceptance Criteria
1. The functional arrangement of the area radiation and airborne radioactivity monitoring systems is as described in the Design Description of Subsection 2.7.6.13.1, and in Tables 2.7.6.13-1 and 2.7.6.13-2.	1. Inspection of the as-built area radiation and airborne radioactivity monitoring systems will be performed.	1. The as-built area radiation and airborne radioactivity monitoring systems conform to the functional arrangement as described in the Design Description of Subsection 2.7.6.13.1, and in Tables 2.7.6.13-1 and 2.7.6.13-2.
2. The seismic Category I radiation monitors identified in Table 2.7.6.13-1 can withstand seismic design basis loads without loss of safety function.	2.i Inspections will be performed to verify that the as-built, seismic Category I radiation monitors, identified in Table 2.7.6.13-1, are located in a seismic Category I structure.	2.i The as-built seismic Category I radiation monitors identified in Table 2.7.6.13-1 are located in a seismic Category I structure.
	2.ii Type tests, analyses, or a combination of type tests and analyses of the seismic Category I radiation monitors identified in Table 2.7.6.13-1 will be performed using analytical assumptions, or will be performed under conditions, which bound the seismic design basis requirements.	2.ii A report exists and concludes that the seismic Category I radiation monitors identified in Table 2.7.6.13-1 can withstand seismic design basis loads without loss of safety function.
	2.iii Inspections and analyses will be performed to verify that the as-built seismic Category I radiation monitors identified in Table 2.7.6.13-1, including anchorages, are seismically bounded by the tested or analyzed conditions.	2.iii A report exists and concludes that the as-built seismic Category I radiation monitors identified in Table 2.7.6.13-1, including anchorages, are seismically bounded by the tested or analyzed conditions.

Table 2.7.6.13-3 Area Radiation and Airborne Radioactivity Monitoring Systems Inspections, Tests, Analyses, and Acceptance Criteria (Sheet 2 of 3)

Design Commitment	Inspections, Tests, Analyses	Acceptance Criteria
3. The Class 1E radiation monitors identified in Table 2.7.6.13-1 as being qualified for a harsh environment can withstand the environmental conditions that would exist before, during, and following a design basis accident without loss of safety function for the time required to perform the safety function.	3.i Type tests or a combination of type tests and analyses using the design environmental conditions, or under the conditions which bound the design environmental conditions, will be performed on the Class 1E radiation monitors identified in Table 2.7.6.13-1 as being qualified for a harsh environment.	3.i A report exists and concludes that the Class 1E radiation monitors identified in Table 2.7.6.13-1 as being qualified for a harsh environment can withstand the environmental conditions that would exist before, during, and following a design basis accident without loss of safety function for the time required to perform the safety function.
	3.ii Inspections will be performed on the as-built Class 1E radiation monitors identified in Table 2.7.6.13-1 as being qualified for a harsh environment, and the associated wiring, cables, and terminations located in a harsh environment.	3.ii The as-built Class 1E radiation monitors and the associated wiring, cables, and terminations identified in Table 2.7.6.13-1 as being qualified for a harsh environment are bounded by type tests or a combination of type tests and analyses.
4.a Class 1E radiation monitors identified in Table 2.7.6.13-1 are powered from their respective Class 1E division.	4.a A test will be performed on each division of the as-built radiation Class 1E monitors identified in Table 2.7.6.13-1 by providing a simulated test signal only in the Class 1E division under test.	4.a The simulated test signal exists at the as-built Class 1E radiation monitors, identified in Table 2.7.6.13-1 under test.
4.b Separation is provided between redundant divisions of Class 1E radiation monitor cables, and between Class 1E cables and non-Class 1E cables.	4.b Inspections of the as-built Class 1E divisional cables will be performed.	4.b Physical separation or electrical isolation is provided in accordance with RG 1.75, between the as-built cables of redundant Class 1E divisions and between Class 1E cables and non-Class 1E cables.
5. Each redundant division of Class 1E radiation monitors identified in Table 2.7.6.13-1 is physically separated from the other divisions.	5. Inspections of the as-built Class 1E radiation monitors will be performed.	5. Each redundant division of the Class 1E radiation monitors identified in Table 2.7.6.13-1 is physically separated from other divisions in accordance with RG 1.75.

Table 2.7.6.13-3 Area Radiation and Airborne Radioactivity Monitoring Systems Inspections, Tests, Analyses, and Acceptance Criteria (Sheet 3 of 3)

Design Commitment	Inspections, Tests, Analyses	Acceptance Criteria
6. Data and alarms, including power failure alarms, from the Class 1E radiation monitors identified in Table 2.7.6.13-1 are provided in the MCR.	6. An inspection will be performed for retrievability of data and alarms in the as-built MCR.	6. The data and alarms, including power failure alarms, from the as-built Class 1E radiation monitors identified in Table 2.7.6.13-1 can be retrieved in the as-built MCR.

2.8 RADIATION PROTECTION

2.8.1 Design Description

The US-APWR is designed to keep radiation exposures to plant personnel and off-site members of the public within applicable regulatory limits, and as low as reasonably achievable (ALARA).

Shielding walls and floors for seismic Category I structures are identified in Tables 2.2-2 and shown in Figure 2.11.1-1.

Area radiation and airborne radioactivity monitoring systems are described in Section 2.7.6.13.

1.a. Deleted.

1.b. Shielding walls and floors in the auxiliary building are provided to ensure maximum radiation levels are maintained within the limits for Zones I through IX specified in Table 2.8-2.

2. Deleted.

3. Ventilation flows for the radiological controlled areas (RCAs) maintain the concentrations of airborne radioactivity within the limits specified in 10 CFR 20, Appendix B.

2.8.2 Inspections, Tests, Analyses, and Acceptance Criteria

Table 2.8-1 describes the ITAAC for radiation protection.

ITAAC for shielding walls and floors are described in Table 2.2-4 and Table 2.11.1-2.

Table 2.8-1 Radiation Protection Inspections, Tests, Analyses, and Acceptance Criteria

Design Commitment	Inspections, Tests, Analyses	Acceptance Criteria
1.a Deleted.	1.a Deleted.	1.a Deleted.
1.b Shielding walls and floors in the auxiliary building are provided to ensure maximum radiation levels are maintained within the limits for Zones I through IX specified in Table 2.8-2.	1.b Inspections and analysis of the thicknesses of the as-built shielding walls and floors in the auxiliary building will be performed.	1.b A report exists and concludes that the thicknesses of the as-built shielding walls and floors in the auxiliary building ensure maximum radiation levels are maintained within the limits for Zones I through IX specified in Table 2.8-2.
2. Deleted.	2. Deleted.	2. Deleted.
3. Ventilation flows for the radiological controlled areas (RCAs) maintain the concentrations of airborne radioactivity within the limits specified in 10 CFR 20 Appendix B.	3.i Analyses will be performed to confirm that the design ventilation flow for each RCA maintains the concentrations of airborne radioactivity within the limits specified in 10 CFR 20, Appendix B.	3.i A report exists and concludes that the design ventilation flow for each RCA maintains the concentrations of airborne radioactivity within the limits specified in 10 CFR 20, Appendix B.
	3.ii Testing will be performed to verify that the design ventilation flow for each RCA is met.	3.ii The design ventilation flow for each RCA is met.

Table 2.8-2 Radiation Zone Designations

Zone	Dose Rate
I	≤0.25 mrem/h
II	≤1.0 mrem/h
III	≤2.5 mrem/h
IV	≤15.0 mrem/h
V	≤100.0 mrem/h
VI	≤1.0 rem/h
VII	≤10.0 rem/h
VIII	≤100.0 rem/h
IX	≤500.0 rad/h
X	>500.0 rad/h

2.9 HUMAN FACTORS ENGINEERING

2.9.1 Design Description

The human factors engineering (HFE) program ensures that each human-system interface (HSI) reflects the latest human factors principles and satisfies the applicable regulatory requirements. Most of the human-system interface system (HSIS) is fully computerized, although there are some portions that utilize conventional switches and indicators.

2.9.1.1 General HFE Program and Scope

The goals of the US-APWR HFE Program are to ensure that an adequate HFE program is developed and the program is implemented. The general objectives of the HFE program are stated in human-centered terms, which, as the HFE program develops, are defined and used as a basis for HFE test and evaluation activities.

The HFE program addresses the HSIS in the following areas:

- Main control room (MCR)
- Remote shutdown room (RSR)
- Technical support center (TSC)
- Local control stations (LCSs) - consideration of HFE activities for LCSs are limited to those LCSs that support:
  - On-line testing, radiological protection activities, and required chemical monitoring supporting technical specifications
  - Maintenance required by technical specifications
  - Emergency and abnormal conditions response
- Emergency operations facilities (EOFs) (communications and information requirements only)

2.9.1.2 HFE Program Elements

The completion of following elements of the HFE technical program, including the analyses, design, evaluation and implementation, is performed in accordance with the overall HFE process and the methodologies described in the individual implementation plans. The results and outcomes of the activities are summarized in individual results summary reports.

1. Deleted.
2. Deleted.
3. Deleted.
4. Deleted.

5. Task analysis is performed in accordance with the requirements of the Task Analysis Implementation Plan.

6. A staffing and qualifications analysis is performed in accordance with the requirements of the Staffing and Qualifications Implementation Plan.

7. The HSI design process is conducted in accordance with the requirements of the HSI Design Implementation Plan.

7.a Deleted.

7.b Deleted.

7.c Deleted.

7.d Deleted.

7.e Deleted.

7.f Deleted.

7.g Deleted.

7.h Deleted.

7.i Deleted.

7.j Deleted.

7.k Deleted.

7.l Deleted.

8. Deleted.

8.a Deleted.

9. Deleted.

9.a Deleted.

10. The Verification and Validation (V&V) program is conducted in accordance with the requirements of the V&V Program Implementation Plan.

10.a Deleted.

10.b Deleted.

10.c Deleted.

11. Design implementation is conducted in accordance with the requirements of the HSI Design Implementation Plan.

12. Human performance issues are identified as Human Engineering Discrepancies (HEDs) and are tracked and dispositioned by the strategy and process developed in accordance with the Human Performance Monitoring (HPM) Implementation Plan.

2.9.2 Inspection, Tests, Analyses, and Acceptance Criteria

Table 2.9-1 describes the ITAAC for HFE.

Table 2.9-1 Human Factors Engineering Inspections, Tests, Analyses, and Acceptance Criteria (Sheet 1 of 2)

Design Commitment	Inspections, Tests, Analyses	Acceptance Criteria
1. Deleted.	1. Deleted	1. Deleted
2. Deleted.	2. Deleted.	2. Deleted.
3. Deleted.	3. Deleted.	3. Deleted.
4. Deleted.	4. Deleted.	4. Deleted.
5. Task analysis is conducted in accordance with the requirements of the Task Analysis Implementation Plan.	5. An inspection of the task analysis results summary report(s) will be performed.	5. A results summary report exists and concludes that the task analysis has been conducted in accordance with the Task Analysis Implementation Plan.
6. A staffing and qualifications analysis is conducted in accordance with the requirements of the Staffing and Qualifications Implementation Plan.	6. An inspection of the staffing and qualifications analysis results summary report(s) will be performed.	6. A results summary report exists and concludes that the staffing and qualifications analysis has been conducted in accordance with the Staffing and Qualifications Implementation Plan.
7. The HSI design process is conducted in accordance with the requirements of the HSI Design Implementation Plan.	7. An inspection of the HSI design results summary report(s) will be performed.	7. A results summary report exists and concludes that the HSI design process has been conducted in accordance with the HSI Design Implementation Plan.
7.a Deleted.	7.a Deleted.	7.a Deleted.
7.b Deleted.	7.b Deleted.	7.b Deleted.
7.c Deleted.	7.c Deleted.	7.c Deleted.
7.d Deleted.	7.d Deleted.	7.d Deleted.
7.e Deleted.	7.e Deleted.	7.e Deleted.
7.f Deleted.	7.f Deleted.	7.f Deleted.
7.g Deleted.	7.g Deleted.	7.g Deleted.
7.h Deleted.	7.h Deleted.	7.h Deleted.
7.i Deleted.	7.i Deleted.	7.i Deleted.
7.j Deleted.	7.j Deleted.	7.j Deleted.
7.k Deleted.	7.k Deleted.	7.k Deleted.
7.l Deleted.	7.l Deleted.	7.l Deleted.
8. Deleted.	8. Deleted.	8. Deleted.
8.a Deleted.	8.a Deleted.	8.a Deleted.
9. Deleted.	9. Deleted.	9. Deleted.
9.a Deleted.	9.a Deleted.	9.a Deleted.

Table 2.9-1 Human Factors Engineering Inspections, Tests, Analyses, and Acceptance Criteria (Sheet 2 of 2)

Design Commitment	Inspections, Tests, Analyses	Acceptance Criteria
10. The Verification and Validation (V&V) program is conducted in accordance with the requirements of the V&V Program Implementation Plan.	10. An inspection of the V&V program results summary report(s) will be performed.	10. A results summary report exists and concludes that the V&V program has been conducted in accordance with the V&V Implementation Plan.
10.a Deleted.	10.a Deleted.	10.a Deleted.
10.b Deleted.	10.b Deleted.	10.b Deleted.
10.c Deleted.	10.c Deleted.	10.c Deleted.
11. Design implementation is conducted in accordance with the requirements of the HSI Design Implementation Plan.	11. An inspection of the HSI design implementation results summary report(s) will be performed.	11. A results summary report exists and concludes that the HSI design implementation has been conducted in accordance with the HSI Design Implementation Plan, that the as-built HSI design is the same as the design verified and validated in the simulator, and that any changes from the simulator design V&V have been confirmed using supplemental V&V methods.
12. Human performance issues are identified as Human Engineering Discrepancies (HEDs) and are tracked and dispositioned by the strategy and process developed in accordance with the Human Performance Monitoring (HPM) Implementation Plan.	12. An inspection of the human performance monitoring results summary report will be performed.	12. A results summary report exists and concludes that the human performance monitoring strategy is developed and documented in accordance with the HPM Implementation Plan.

2.10 EMERGENCY PLANNING

This section addresses certain features of the US-APWR plant design that support emergency planning and the capability of the licensee to cope with plant emergencies.

2.10.1 Design Description

Important facilities, design features, and equipment associated with emergency planning include:

- The onsite technical support center (TSC),
- Communication systems for voice and data,
- The emergency response data system, and
- The safety parameter display system (SPDS).

The TSC serves as the primary onsite communications center during emergency conditions and is equipped with voice and data communications systems for processing and displaying information. The TSC also provides a habitable working environment as described in Subsection 2.7.5.4.1.4.

Subsections 2.7.6.10 and 2.5.4 describe communication and information systems, including the emergency response data system and SPDS, that are available in the MCR and TSC.

1. The TSC floor space is at least 1875 ft^2.

2. Deleted.

3. Deleted.

4. Deleted.

2.10.2 Inspections, Tests, Analyses, and Acceptance Criteria

Table 2.10-1 describes ITAAC for emergency planning.

Table 2.10-1 Emergency Planning Inspections, Tests, Analyses, and Acceptance Criteria

Design Commitment	Inspections, Tests, Analyses	Acceptance Criteria
1. The TSC floor space is at least 1875 ft^2.	1. An inspection and analysis of the as-built TSC floor area will be performed.	1. A report exists and concludes that the as-built TSC has at least 1875 ft^2 of floor space.
2. Deleted.	2. Deleted.	2. Deleted.
3. Deleted.	3. Deleted.	3. Deleted.
4. Deleted.	4. Deleted.	4. Deleted.

2.11 CONTAINMENT SYSTEMS

The containment vessel (C/V), commonly referred to as the containment or prestressed concrete containment vessel (PCCV), is addressed in this section, along with the following related systems:

- The containment isolation system (CIS)
- The containment spray system (CSS)
- The containment hydrogen monitoring and control system (CHS)

2.11.1 Containment Vessel

2.11.1.1 Design Description

The containment is a safety-related structure with the primary purpose of providing an essentially leak tight barrier that safely accommodates calculated temperature and pressure conditions resulting from the complete size spectrum of piping breaks, up to and including a double-ended, guillotine type break of a reactor coolant loop or main steam line. Key containment design and performance characteristics are provided in Table 2.11.1-1.

Instruments are installed to monitor conditions inside the containment and actuate appropriate safety functions when an abnormal condition is sensed. These instruments send information to the protection and safety monitoring system (PSMS), diverse actuation system (DAS), and plant control and monitoring system (PCMS), as described in Section 2.5.

1.a. Deleted.

1.b. The PCCV liner is fabricated, installed, and inspected in accordance with ASME Code, Section III requirements.

1.c. The PCCV liner welds meet ASME Code, Section III requirements for non-destructive examination of welds.

2. Deleted.

3. The functional arrangement of the PCCV is as described in the Design Description of Subsection 2.11.1.1 and as shown in Figure 2.11.1-1.

4. A set of drain lines from the SG compartments to the reactor cavity exists.

5. The reactor cavity includes a core debris trap.

6. The reactor cavity floor area and depth facilitate debris spreading and cooling.

7. Reactor cavity floor concrete provides protection for the liner plate.

2.11.1.2 Inspections, Tests, Analyses, and Acceptance Criteria

Table 2.11.1-2 describes the ITAAC for the PCCV.

Table 2.11.1-1 Key Containment Design and Performance Characteristics

Characteristic	Value
Containment internal design pressure (psig)	68
Containment design temperature (degrees F)	300
Containment external design pressure (psig)	3.9
Containment free volume (cubic feet)	2,800,000
Containment design leakage rate (%/day)	0.1
Assumed leak rate of containment during LOCA analyses [0-24 hours] (%/day)	0.15

Table 2.11.1-2 Containment Vessel Inspections, Tests, Analyses, and Acceptance Criteria (Sheet 1 of 2)

Design Commitment	Inspections, Tests, Analyses	Acceptance Criteria
1.a Deleted.	1.a Deleted.	1.a Deleted.
1.b The PCCV liner is fabricated, installed, and inspected in accordance with ASME Code, Section III requirements.	1.b Inspection of the as-built PCCV liner will be performed.	1.b The ASME Code, Section III data report(s) (certified, when required by ASME Code) and inspection reports (including N-5 Data Reports where applicable) exist and conclude that the as-built PCCV liner was fabricated, installed, and inspected in accordance with ASME Code, Section III requirements.
1.c The PCCV liner welds meet ASME Code, Section III requirements for non-destructive examination of welds.	1.c Inspections of the as-built PCCV liner welds will be performed in accordance with ASME Code, Section III.	1.c The ASME Code, Section III code reports exist and conclude that the ASME Code, Section III requirements are met for non-destructive examination of the as-built PCCV liner welds.
2. Deleted.	2. Deleted.	2. Deleted.
3. The functional arrangement of the PCCV is as described in the Design Description of Subsection 2.11.1.1 and as shown in Figure 2.11.1-1.	3. Inspections of the as built PCCV will be performed.	3. The as-built PCCV conforms to the functional arrangement as described in the Design Description of Subsection 2.11.1.1 and as shown in Figure 2.11.1-1 with the following dimensional tolerances: D1, R1: +6.0/-6.0 inches H1, H2, H3: +3.0/-3.0 inches H4: +6.0/-6.0 inches t1, t2, t3: +3.0/-3.0 inches
4. A set of drain lines from the SG compartments to the reactor cavity exists.	4. Inspections of the as-built drain lines from the as-built SG compartments to the as-built reactor cavity will be performed.	4. Drain lines from the as-built SG compartments to the as-built reactor cavity exist.
5. The reactor cavity includes a core debris trap.	5. An inspection of the as-built reactor cavity will be performed.	5. The as-built reactor cavity includes a core debris trap.

Table 2.11.1-2 Containment Vessel Inspections, Tests, Analyses, and Acceptance Criteria (Sheet 2 of 2)

Design Commitment	Inspections, Tests, Analyses	Acceptance Criteria
6. The reactor cavity floor area and depth facilitate debris spreading and cooling.	6. Inspections and analyses of the as-built reactor cavity floor area and depth will be performed.	6. The as-built reactor cavity floor area and depth are greater than or equal to 970 ft^2 and 20 ft, respectively, to facilitate debris spreading and cooling.
7. Reactor cavity floor concrete provides protection for the liner plate.	7. Inspections of the as-built reactor cavity floor concrete will be performed.	7. The as-built reactor cavity floor concrete thickness is greater than or equal to 3 ft to provide protection for the liner plate.

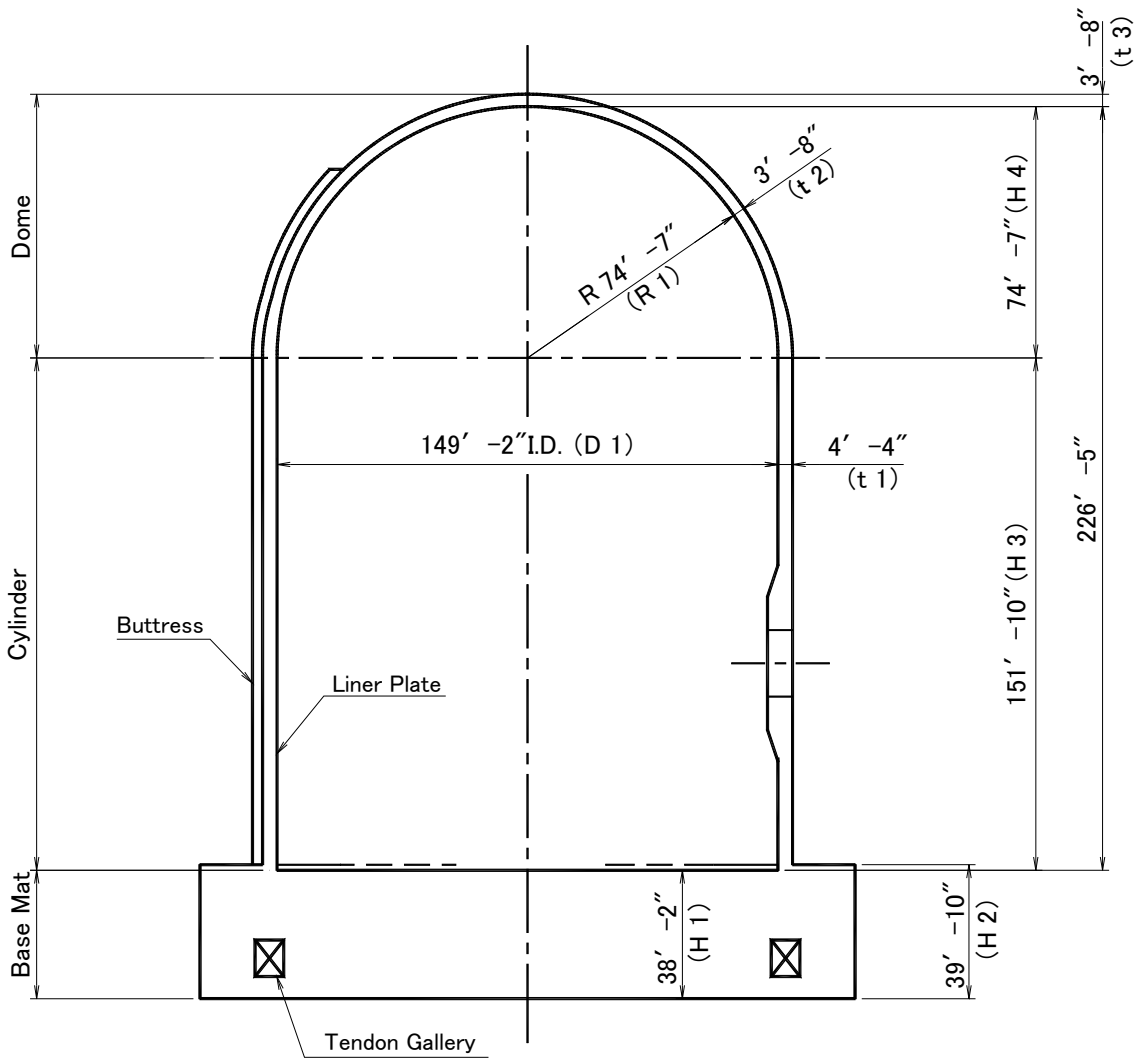

Figure 2.11.1-1 Configuration of Prestressed Concrete Containment Vessel

2.11.2 Containment Isolation System

2.11.2.1 Design Description

The function of the Containment Isolation System (CIS) is to establish and preserve containment boundary integrity when this is required.

The containment isolation signal is generated and actuated by the protection and safety monitoring system (PSMS).

1. The functional arrangement of the CIS is as described in the Design Description of Subsection 2.11.2 and as shown in Figure 2.11.2-1.

2.a.i The ASME Code Section III components of the CIS, identified in Table 2.11.2-1, are fabricated, installed, and inspected in accordance with ASME Code Section III requirements.

2.a.ii The ASME Code Section III components of the CIS identified in Table 2.11.2-1 are reconciled with the design requirements.

2.b.i The ASME Code Section III piping of the CIS, including supports, identified on Figure 2.11.2-1, is fabricated, installed, and inspected in accordance with ASME Code Section III requirements.

2.b.ii The ASME Code Section III piping of the CIS, including supports, identified on Figure 2.11.2-1, is reconciled with the design requirements.

3.a Pressure boundary welds in ASME Code Section III components, identified in Table 2.11.2-1, meet ASME Code Section III requirements for non-destructive examination of welds.

3.b Pressure boundary welds in ASME Code Section III piping, identified on Figure 2.11.2-1, meet ASME Code Section III requirements for non-destructive examination of welds.

4.a The ASME Code Section III components, identified in Table 2.11.2-1, retain their pressure boundary integrity at their design pressure.

4.b The ASME Code Section III piping, identified on Figure 2.11.2-1, retains its pressure boundary integrity at its design pressure.

5.a The seismic Category I equipment identified in Table 2.11.2-1 can withstand seismic design basis loads without loss of safety function.

5.b The seismic Category I piping, including supports, identified on Figure 2.11.2-1, can withstand seismic design basis loads without loss of its safety function.

6.a The Class 1E equipment identified in Table 2.11.2-1 as being qualified for a harsh environment can withstand the environmental conditions that would exist

before, during, and following a design basis accident without loss of safety function for the time required to perform the safety function.

6.b Class 1E equipment, identified in Table 2.11.2-1, is powered from its respective Class 1E division.

6.c Separation is provided between redundant divisions of CIS Class 1E cables, and between Class 1E cables and non-Class 1E cables.

7. The remotely operated valves identified in Table 2.11.2-1 as having PSMS control perform an active safety function after receiving a signal from PSMS.

8. CIV closure times are established to limit potential releases of radioactivity to amounts as low as reasonably achievable.

9. The Containment Isolation System (CIS) provides a safety-related function of containment isolation to prevent or limit the release of fission products to the environment in the event of an accident.

10. Controls are provided in the MCR to open and close the remotely operated valves identified in Table 2.11.2-3.

11.a Displays identified in Table 2.11.2-3 are provided in the MCR.

11.b Displays and controls identified in Table 2.11.2-3 are provided in the RSC.

12. The motor-operated, air-operated and check valves, identified in Table 2.11.2-1 as having an active safety function, perform an active safety function to change position as indicated in the table.

13. After loss of motive power, the remotely operated valves, identified in Table 2.11.2-1, assume the indicated loss of motive power position.

14. Containment penetrations are isolated automatically during an SBO event with alternate ac power sources unavailable.

15. Remotely operated CIVs located inside and outside the containment in series on the same penetration are powered from different Class 1E divisions.

2.11.2.2 Inspections, Tests, Analyses, and Acceptance Criteria

Table 2.11.2-2 describes the ITAAC for the CIS.

The MSIVs and MSBIVs ITAAC for closure times and testing in response to a closure signal are described in ITAAC Table 2.7.1.2-5 Items 8.b and 14.

Table 2.11.2-1 Containment Isolation System Equipment Characteristics (Sheet 1 of 10)

System Name	Tag No.	ASME Code Section III Class	Seismic Category I	Remotely Operated Valve	Class 1E/ Qual. For Harsh Envir.	Safety-Related Display	PSMS Control	Active Safety Function	Loss of Motive Power Position
RCS	RCS-VLV-133	2	Yes	No	-/-	No	-	Transfer Closed	-
RCS	RCS-AOV-132	2	Yes	Yes	Yes/No	Yes	Containment Isolation Phase A	Transfer Closed	Closed
RCS	RCS-VLV-139	2	Yes	No	-/-	No	-	Transfer Closed	-
RCS	RCS-VLV-140	2	Yes	No	-/-	No	-	-	-
RCS	RCS-AOV-138	2	Yes	Yes	Yes/No	Yes	Containment Isolation Phase A	Transfer Closed	Closed
RCS	RCS-AOV-147	2	Yes	Yes	Yes/ Yes	Yes	Containment Isolation Phase A	Transfer Closed	Closed
RCS	RCS-AOV-148	2	Yes	Yes	Yes/No	Yes	Containment Isolation Phase A	Transfer Closed	Closed
WMS	LMS-AOV-052	2	Yes	Yes	Yes/Yes	Yes	Containment Isolation Phase A	Transfer Closed	Closed
WMS	LMS-AOV-053	2	Yes	Yes	Yes/No	Yes	Containment Isolation Phase A	Transfer Closed	Closed
WMS	LMS-AOV-055	2	Yes	Yes	Yes/Yes	Yes	Containment Isolation Phase A	Transfer Closed	Closed

Table 2.11.2-1 Containment Isolation System Equipment Characteristics (Sheet 2 of 10)

System Name	Tag No.	ASME Code Section III Class	Seismic Category I	Remotely Operated Valve	Class 1E/ Qual. For Harsh Envir.	Safety-Related Display	PSMS Control	Active Safety Function	Loss of Motive Power Position
WMS	LMS-AOV-056	2	Yes	Yes	Yes/No	Yes	Containment Isolation Phase A	Transfer Closed	Closed
WMS	LMS-AOV-060	2	Yes	Yes	Yes/No	Yes	Containment Isolation Phase A	Transfer Closed	Closed
WMS	LMS-LCV-010A	2	Yes	Yes	Yes/Yes	Yes	Containment Isolation Phase A	Transfer Closed	Closed
WMS	LMS-LCV-010B	2	Yes	Yes	Yes/No	Yes	Containment Isolation Phase A	Transfer Closed	Closed
WMS	LMS-AOV-104	2	Yes	Yes	Yes/Yes	Yes	Containment Isolation Phase A	Transfer Closed	Closed
WMS	LMS-AOV-105	2	Yes	Yes	Yes/No	Yes	Containment Isolation Phase A	Transfer Closed	Closed
RWS	RWS-MOV-002	2	Yes	Yes	Yes/Yes	Yes	Containment Isolation Phase A	Transfer Closed	As Is
RWS	RWS-MOV-004	2	Yes	Yes	Yes/No	Yes	Containment Isolation Phase A	Transfer Closed	As Is
RWS	RWS-VLV-003	2	Yes	No	-/-	No	-	Transfer Closed	-

Table 2.11.2-1 Containment Isolation System Equipment Characteristics (Sheet 3 of 10)

System Name	Tag No.	ASME Code Section III Class	Seismic Category I	Remotely Operated Valve	Class 1E/ Qual. For Harsh Envir.	Safety-Related Display	PSMS Control	Active Safety Function	Loss of Motive Power Position
RWS	RWS-VLV-023	2	Yes	No	-/-	No	-	Transfer Closed	-
RWS	RWS-AOV-022	2	Yes	Yes	Yes/No	Yes	Containment Isolation Phase A	Transfer Closed	Closed
PMWS	DWS-VLV-005	2	Yes	No	-/-	No	-	-	-
PMWS	DWS-VLV-004	2	Yes	No	-/-	No	-	-	-
IAS	IAS-VLV-003	2	Yes	No	-/-	No	-	Transfer Closed	-
IAS	IAS-MOV-002	2	Yes	Yes	Yes/No	Yes	Containment Isolation Phase A	Transfer Closed	As Is
FSS	FSS-VLV-003	2	Yes	No	-/-	No	-	Transfer Closed	-
FSS	FSS-AOV-001	2	Yes	Yes	Yes/No	Yes	Containment Isolation Phase A	Transfer Closed	Closed
FSS	FSS-VLV-006	2	Yes	No	-/-	No	-	-	-
FSS	FSS-MOV-004	2	Yes	Yes	Yes/No	Yes	-	-	As Is
SSAS	SAS-VLV-103	2	Yes	No	-/-	No	-	-	-
SSAS	SAS-VLV-101	2	Yes	No	-/-	No	-	-	-
CVVS	VCS-AOV-306	2	Yes	Yes	Yes/Yes	Yes	Containment Purge Isolation	Transfer Closed	Closed

Table 2.11.2-1 Containment Isolation System Equipment Characteristics (Sheet 4 of 10)

System Name	Tag No.	ASME Code Section III Class	Seismic Category I	Remotely Operated Valve	Class 1E/ Qual. For Harsh Envir.	Safety-Related Display	PSMS Control	Active Safety Function	Loss of Motive Power Position
CVVS	VCS-AOV-307	2	Yes	Yes	Yes/No	Yes	Containment Purge Isolation	Transfer Closed	Closed
CVVS	VCS-AOV-305	2	Yes	Yes	Yes/Yes	Yes	Containment Purge Isolation	Transfer Closed	Closed
CVVS	VCS-AOV-304	2	Yes	Yes	Yes/No	Yes	Containment Purge Isolation	Transfer Closed	Closed
CVVS	VCS-AOV-356	2	Yes	Yes	Yes/Yes	Yes	Containment Purge Isolation	Transfer Closed	Closed
CVVS	VCS-AOV-357	2	Yes	Yes	Yes/No	Yes	Containment Purge Isolation	Transfer Closed	Closed
CVVS	VCS-AOV-355	2	Yes	Yes	Yes/Yes	Yes	Containment Purge Isolation	Transfer Closed	Closed
CVVS	VCS-AOV-354	2	Yes	Yes	Yes/No	Yes	Containment Purge Isolation	Transfer Closed	Closed
CVVS	VCS-PT-371,372	-	Yes	-	No/No	No	-	-	-
VWS	VWS-MOV-407	2	Yes	Yes	Yes/No	Yes	Containment Isolation Phase A	Transfer Closed	As Is

Table 2.11.2-1 Containment Isolation System Equipment Characteristics (Sheet 5 of 10)

System Name	Tag No.	ASME Code Section III Class	Seismic Category I	Remotely Operated Valve	Class 1E/ Qual. For Harsh Envir.	Safety-Related Display	PSMS Control	Active Safety Function	Loss of Motive Power Position
VWS	VWS-MOV-403	2	Yes	Yes	Yes/No	Yes	Containment Isolation Phase A	Transfer Closed	As Is
VWS	VWS-MOV-422	2	Yes	Yes	Yes/Yes	Yes	Containment Isolation Phase A	Transfer Closed	As is
VWS	VWS-VLV-421	2	Yes	No	-/-	No	-	Transfer Closed	-
VWS	VWS-VLV-423	2	Yes	No	-/-	No	-	Transfer Closed	-
RMS	RMS-VLV-005	2	Yes	No	-/-	No	-	Transfer Closed	-
RMS	RMS-MOV-003	2	Yes	Yes	Yes/No	Yes	Containment Isolation Phase A	Transfer Closed	As Is
RMS	RMS-MOV-001	2	Yes	Yes	Yes/Yes	Yes	Containment Isolation Phase A	Transfer Closed	As Is
RMS	RMS-MOV-002	2	Yes	Yes	Yes/No	Yes	Containment Isolation Phase A	Transfer Closed	As Is
ICIGS	IGS-AOV-002	2	Yes	Yes	Yes/Yes	Yes	Containment Isolation Phase A	Transfer Closed	Closed
ICIGS	IGS-AOV-001	2	Yes	Yes	Yes/No	Yes	Containment Isolation Phase A	Transfer Closed	Closed

Table 2.11.2-1 Containment Isolation System Equipment Characteristics (Sheet 6 of 10)

System Name	Tag No.	ASME Code Section III Class	Seismic Category I	Remotely Operated Valve	Class 1E/ Qual. For Harsh Envir.	Safety-Related Display	PSMS Control	Active Safety Function	Loss of Motive Power Position
LRTS	LTS-VLV-002	2	Yes	No	-/-	No	-	-	-
LRTS	LTS-VLV-001	2	Yes	No	-/-	No	-	-	-
SIS	SIS-VLV-115	Refer to Tables 2.4.4-2 and 2.4.4-4							
SIS	SIS-AOV-114								
SIS	SIS-VLV-010 A,B,C,D								
SIS	SIS-MOV-009 A,B,C,D								
SIS	SIS-MOV-001 A,B,C,D								
CVCS	CVS-AOV-005	Refer to Tables 2.4.6-2 and 2.4.6-4							
CVCS	CVS-AOV-006								
CVCS	CVS-MOV-152								
CVCS	CVS-VLV-153								
CVCS	CVS-MOV-178 A,B,C,D								
CVCS	CVS-VLV-179 A,B,C,D								
CVCS	CVS-MOV-203								
CVCS	CVS-VLV-202								
CVCS	CVS-MOV-204								

NOTE:
Dash (-) indicates not applicable

Table 2.11.2-1 Containment Isolation System Equipment Characteristics (Sheet 7 of 10)

System Name	Tag No.	ASME Code Section III Class	Seismic Category I	Remotely Operated Valve	Class 1E/ Qual. For Harsh Envir.	Safety-Related Display	PSMS Control	Active Safety Function	Loss of Motive Power Position
RHRS	RHS-MOV-002 A,B,C,D	Refer to Tables 2.4.5-2 and 2.4.5-4							
RHRS	RHS-SRV-003 A,B,C,D								
RHRS	RHS-MOV-021 A,B,C,D								
RHRS	RHS-VLV-022 A,B,C,D								
MSS	MSS-SMV-515 A,B,C,D	Refer to Tables 2.7.1.2-2 and 2.7.1.2-4							
MSS	MSS-HCV-565, 575, 585, 595								
MSS	MSS-SRV-509 A,B,C,D MSS-SRV-510 A,B,C,D MSS-SRV-511 A,B,C,D MSS-SRV-512 A,B,C,D MSS-SRV-513 A,B,C,D MSS-SRV-514 A,B,C,D								

Table 2.11.2-1 Containment Isolation System Equipment Characteristics (Sheet 8 of 10)

System Name	Tag No.	ASME Code Section III Class	Seismic Category I	Remotely Operated Valve	Class 1E/ Qual. For Harsh Envir.	Safety-Related Display	PSMS Control	Active Safety Function	Loss of Motive Power Position
MSS	MSS-MOV-507 A,B,C,D	Refer to Tables 2.7.1.2-2 and 2.7.1.2-4							
MSS	MSS-MOV-701 A,B,C,D								
FWS	FWS-SMV-512 A,B,C,D	Refer to Tables 2.7.1.9-2 and 2.7.1.9-4							
SGBDS	SGS-AOV-001 A,B,C,D	Refer to Tables 2.7.1.10-1 and 2.7.1.10-3							
SGBDS	SGS-AOV-031 A,B,C,D								
EFWS	EFS-MOV-101 A,B,C,D	Refer to Tables 2.7.1.11-2 and 2.7.1.11-4							
EFWS	EFS-MOV-019 A,B,C,D								

Table 2.11.2-1 Containment Isolation System Equipment Characteristics (Sheet 9 of 10)

System Name	Tag No.	ASME Code Section III Class	Seismic Category I	Remotely Operated Valve	Class 1E/ Qual. For Harsh Envir.	Safety-Related Display	PSMS Control	Active Safety Function	Loss of Motive Power Position
CCWS	NCS-MOV-402 A, B	Refer to Tables 2.7.3.3-2 and 2.7.3.3-4							
CCWS	NCS-VLV-403 A, B								
CCWS	NCS-MOV-445 A, B								
CCWS	NCS-MOV-436 A, B								
CCWS	NCS-VLV-437 A, B								
CCWS	NCS-MOV-447 A, B								
CCWS	NCS-MOV-438 A, B								
CCWS	NCS-MOV-448 A, B								
CCWS	NCS-MOV-531								
CCWS	NCS-MOV-537								
CCWS	NCS-MOV-511								
CCWS	NCS-MOV-517								

Table 2.11.2-1 Containment Isolation System Equipment Characteristics (Sheet 10 of 10)

System Name	Tag No.	ASME Code Section III Class	Seismic Category I	Remotely Operated Valve	Class 1E/ Qual. For Harsh Envir.	Safety-Related Display	PSMS Control	Active Safety Function	Loss of Motive Power Position
PSS	PSS-MOV-013,023	Refer to Table 2.7.6.7-1 and 2.7.6.7-4							
PSS	PSS-MOV-031A,B								
PSS	PSS-MOV-071								
PSS	PSS-VLV-072								
PSS	PSS-AOV-003								
PSS	PSS-MOV-006								
PSS	PSS-AOV-062 A,B,C,D								
PSS	PSS-AOV-063								
CSS	CSS-MOV-001 A, B, C, D	Refer to Table 2.11.3-2 and 2.11.3-4							
CSS	CSS-MOV-004 A, B, C, D								
CSS	CSS-VLV-005 A, B, C, D								

Table 2.11.2-2 Containment Isolation System Inspections, Tests, Analyses, and Acceptance Criteria (Sheet 1 of 10)

Design Commitment	Inspections, Tests, Analyses	Acceptance Criteria
1. The functional arrangement of the CIS is as described in the Design Description of Subsection 2.11.2 and as shown in Figure 2.11.2-1.	1. Inspection of the as-built CIS will be performed.	1. The as-built CIS conforms to the functional arrangement as described in the Design Description of Subsection 2.11.2 and as shown in Figure 2.11.2-1.
2.a.i The ASME Code Section III components of the CIS, identified in Table 2.11.2-1, are fabricated, installed, and inspected in accordance with ASME Code Section III requirements.	2.a.i Inspection of the as-built ASME Code Section III components of the CIS, identified in Table 2.11.2-1, will be performed.	2.a.i The ASME Code Section III data report(s) (certified, when required by ASME Code) and inspection reports (including N-5 Data Reports where applicable) exist and conclude that the as-built ASME Code Section III components of the CIS identified in Table 2.11.2-1 are fabricated, installed, and inspected in accordance with ASME Code Section III requirements.
2.a.ii The ASME Code Section III components of the CIS identified in Table 2.11.2-1 are reconciled with the design requirements.	2.a.ii A reconciliation analysis of the components identified in Table 2.11.2-1 using as-designed and as-built information and ASME Code Section III design report(s) (NCA-3550) will be performed.	2.a.ii The ASME Code Section III design report(s) (certified, when required by ASME Code) exist and conclude that design reconciliation has been completed in accordance with the ASME Code, for the as-built ASME Code Section III components of the CIS identified in Table 2.11.2-1. The report documents the results of the reconciliation analysis.
2.b.i The ASME Code Section III piping of the CIS, including supports, identified on Figure 2.11.2-1, is fabricated, installed, and inspected in accordance with ASME Code Section III requirements.	2.b.i Inspection of the as-built ASME Code Section III piping of the CIS, including supports, identified on Figure 2.11.2-1, will be performed.	2.b.i The ASME Code Section III data report(s) (certified when required by ASME Code) and inspection reports (including N-5 Data Reports where applicable) exist and conclude that the as-built ASME Code Section III piping of the CIS, including supports, identified on Figure 2.11.2-1, is fabricated, installed, and inspected in accordance with ASME Code Section III requirements.

Table 2.11.2-2 Containment Isolation System Inspections, Tests, Analyses, and Acceptance Criteria (Sheet 2 of 10)

Design Commitment	Inspections, Tests, Analyses	Acceptance Criteria
2.b.ii The ASME Code Section III piping of the CIS, including supports, identified on Figure 2.11.2-1, is reconciled with the design requirements.	2.b.ii A reconciliation analysis of the piping of the CIS, including supports, identified on Figure 2.11.2-1, using as-designed and as-built information and ASME Code Section III design report(s) (NCA3550) will be performed.	2.b.ii The ASME Code Section III design report(s) (certified, when required by ASME Code) exist and conclude that design reconciliation has been completed in accordance with the ASME Code, for the as-built ASME Code Section III piping of the CIS, including supports, identified on Figure 2.11.2-1. The report documents the results of the reconciliation analysis.
3.a Pressure boundary welds in ASME Code Section III components, identified in Table 2.11.2-1, meet ASME Code Section III requirements for non-destructive examination of welds.	3.a Inspections of the as-built pressure boundary welds in ASME Code Section III components identified in Table 2.11.2-1, will be performed in accordance with the ASME Code Section III.	3.a The ASME Code Section III code reports exist and conclude that the ASME Code Section III requirements are met for non-destructive examination of as-built pressure boundary welds in ASME Code Section III components identified in Table 2.11.2-1.
3.b Pressure boundary welds in ASME Code Section III piping, identified on Figure 2.11.2-1, meet ASME Code Section III requirements for non-destructive examination of welds.	3.b Inspections of the as-built pressure boundary welds in ASME Code Section III piping, identified on Figure 2.11.2-1, will be performed in accordance with the ASME Code Section III.	3.b The ASME Code Section III code reports exist and conclude that the ASME Code Section III requirements are met for non-destructive examination of as-built pressure boundary welds in ASME Code Section III piping identified on Figure 2.11.2-1.
4.a The ASME Code Section III components, identified in Table 2.11.2-1, retain their pressure boundary integrity at their design pressure.	4.a A hydrostatic test will be performed on the as-built components, identified in Table 2.11.2-1, required by the ASME Code Section III to be hydrostatically tested.	4.a ASME Code Data Report(s) exist and conclude that the results of the hydrostatic test of the as-built components identified in Table 2.11.2-1 as ASME Code Section III conform to the requirements of the ASME Code Section III.
4.b The ASME Code Section III piping, identified on Figure 2.11.2-1, retains its pressure boundary integrity at its design pressure.	4.b A hydrostatic test will be performed on the as-built piping, identified on Figure 2.11.2-1, required by the ASME Code Section III to be hydrostatically tested.	4.b ASME Code Data Report(s) exist and conclude that the results of the hydrostatic test of the as-built ASME Code Section III piping, identified on Figure 2.11.2-1, conform to the requirements of the ASME Code Section III.

Table 2.11.2-2 Containment Isolation System Inspections, Tests, Analyses, and Acceptance Criteria (Sheet 3 of 10)

Design Commitment	Inspections, Tests, Analyses	Acceptance Criteria
5.a The seismic Category I equipment identified in Table 2.11.2-1 can withstand seismic design basis loads without loss of safety function.	5.a.i Inspections will be performed to verify that the as-built seismic Category I equipment identified in Table 2.11.2-1 is located in a seismic Category I structure.	5.a.i The as-built seismic Category I equipment identified in Table 2.11.2-1 is located in a seismic Category I structure.
	5.a.ii Type tests, analyses, or a combination of type tests and analyses of seismic Category I equipment identified in Table 2.11.2-1 will be performed using analytical assumptions, or will be performed under conditions, which bound the seismic design basis requirements.	5.a.ii A report exists and concludes that the seismic Category I equipment identified in Table 2.11.2-1 can withstand seismic design basis loads without loss of safety function.
	5.a.iii Inspections and analyses will be performed to verify that the as-built seismic Category I equipment identified in Table 2.11.2-1, including anchorages, is seismically bounded by the tested or analyzed conditions.	5.a.iii A report exists and concludes that the as-built seismic Category I equipment identified in Table 2.11.2-1, including anchorages, is seismically bounded by the tested or analyzed conditions.
5.b The seismic Category I piping, including supports, identified on Figure 2.11.2-1, can withstand seismic design basis loads without loss of its safety function.	5.b.i Inspections will be performed to verify that the as-built seismic Category I piping, including supports, identified on Figure 2.11.2-1, is supported by a seismic Category I structure(s).	5.b.i The as-built seismic Category I piping, including supports, identified on Figure 2.11.2-1, is supported by a seismic Category I structure(s).
	5.b.ii Inspections and analyses will be performed to verify that the as-built seismic Category I piping, including supports, identified on Figure 2.11.2-1, can withstand seismic design basis loads without a loss of its safety function.	5.b.ii A report exists and concludes that the as-built seismic Category I piping, including supports, identified on Figure 2.11.2-1, can withstand seismic design basis loads without a loss of its safety function.

Table 2.11.2-2 Containment Isolation System Inspections, Tests, Analyses, and Acceptance Criteria (Sheet 4 of 10)

Design Commitment	Inspections, Tests, Analyses	Acceptance Criteria
6.a The Class 1E equipment identified in Table 2.11.2-1 as being qualified for a harsh environment can withstand the environmental conditions that would exist before, during, and following a design basis accident without loss of safety function for the time required to perform the safety function.	6.a.i Type tests or a combination of type tests and analyses using the design environmental conditions, or under the conditions which bound the design environmental conditions will be performed on the Class 1E equipment identified in Table 2.11.2-1 as being qualified for a harsh environment.	6.a.i A report exists and concludes that the Class 1E equipment identified in Table 2.11.2-1 as being qualified for a harsh environment can withstand the environmental conditions that would exist before, during, and following a design basis accident without loss of safety function for the time required to perform the safety function.
	6.a.ii Inspection will be performed of the as-built Class 1E equipment identified in Table 2.11.2-1 as being qualified for a harsh environment and the associated wiring, cables, and terminations located in a harsh environment.	6.a.ii The as-built Class 1E equipment and the associated wiring, cables, and terminations identified in Table 2.11.2-1 as being qualified for a harsh environment are bounded by type tests or a combination of type tests and analyses.
6.b Class 1E equipment, identified in Table 2.11.2-1, is powered from its respective Class 1E division.	6.b A test will be performed on each division of the as-built Class 1E equipment identified in Table 2.11.2-1 by providing a simulated test signal only in the Class 1E division under test.	6.b The simulated test signal exists at the as-built Class 1E equipment identified in Table 2.11.2-1 under test.
6.c Separation is provided between redundant divisions of CIS Class 1E cables, and between Class 1E cables and non-Class 1E cables.	6.c Inspections of the as-built Class 1E divisional cables will be performed.	6.c Physical separation or electrical isolation is provided in accordance with RG 1.75, between the as-built cables of redundant CIS Class 1E divisions and between Class 1E cables and non-Class 1E cables.
7. The remotely operated valves identified in Table 2.11.2-1 as having PSMS control perform an active safety function after receiving a signal from PSMS.	7. Tests will be performed on the as-built remotely operated valves identified in Table 2.11.2-1 as having PSMS control using simulated signals.	7. The as-built remotely operated valves identified in Table 2.11.2-1 as having PSMS control perform the active safety function identified in the table after receiving a simulated signal.

Table 2.11.2-2 Containment Isolation System Inspections, Tests, Analyses, and Acceptance Criteria (Sheet 5 of 10)

Design Commitment	Inspections, Tests, Analyses	Acceptance Criteria
8. CIV closure times are established to limit potential releases of radioactivity to amounts as low as reasonably achievable.	8.i Tests will be performed to verify as-built RCS CIVs close within the isolation response times.	8.i The following as-built RCS CIVs close within the required times: ≤ 15 seconds RCS-AOV-132 RCS-AOV-138 RCS-AOV-147 RCS-AOV-148
	8.ii Tests will be performed to verify as-built WMS CIVs close within the isolation response times.	8.ii The following as-built WMS CIVs close within the required times: ≤15 seconds. LMS-AOV-104 LMS-AOV-105 LMS-AOV-052 LMS-AOV-053 LMS-AOV-055 LMS-AOV-056 LMS-AOV-060 LMS-LCV-10A LMS-LCV-10B
	8.iii Tests will be performed to verify as-built RWS CIVs close within the isolation response times.	8.iii The following as-built RWS CIVs close within the required times: ≤ 20 seconds RWS-AOV-022 ≤ 30 seconds RWS-MOV-002 RWS-MOV-004
	8.iv Tests will be performed to verify as-built IAS CIVs close within the isolation response times.	8.iv The following as-built IAS CIVs close within the required times: ≤ 15 seconds IAS-MOV-002
	8.v Tests will be performed to verify as-built FSS CIVs close within the isolation response times.	8.v The following as-built FSS CIVs close within the required times: ≤ 15 seconds FSS-AOV-001

Table 2.11.2-2 Containment Isolation System Inspections, Tests, Analyses, and Acceptance Criteria (Sheet 6 of 10)

Design Commitment	Inspections, Tests, Analyses	Acceptance Criteria
	8.vi Tests will be performed to verify as-built CVVS CIVs close within the isolation response times.	8.vi The following as-built CVVS CIVs close within the required times: ≤ 5 seconds VCS-AOV-306 VCS-AOV-307 VCS-AOV-305 VCS-AOV-304 VCS-AOV-356 VCS-AOV-357 VCS-AOV-355 VCS-AOV-354
	8.vii Tests will be performed to verify as-built VWS CIVs close within the isolation response times.	8.vii The following as-built VWS CIVs close within the required times: ≤ 50 seconds VWS-MOV-422 VWS-MOV-407 VWS-MOV-403
	8.viii Tests will be performed to verify as-built RMS CIVs close within the isolation response times.	8.viii The following as-built RMS CIVs close within the required times: ≤ 15 seconds RMS-MOV-001 RMS-MOV-002 RMS-MOV-003
	8.ix Tests will be performed to verify as-built ICIGS CIVs close within the isolation response times.	8.ix The following as-built ICIGS CIVs close within the required times: ≤15 seconds IGS-AOV-001 IGS-AOV-002
	8.x Tests will be performed to verify as-built SIS CIV closes within the isolation response times.	8.x The following as-built SIS CIV closes within the required time: ≤ 15 seconds SIS-AOV-114
	8.xi Tests will be performed to verify as-built CVCS CIVs close within the isolation response times.	8.xi The following as-built CVCS CIVs close within the required times: ≤ 15 seconds CVS-MOV-203 CVS-MOV-204 ≤ 20 seconds CVS-AOV-005 CVS-AOV-006 CVS-MOV-152

Table 2.11.2-2 Containment Isolation System Inspections, Tests, Analyses, and Acceptance Criteria (Sheet 7 of 10)

Design Commitment	Inspections, Tests, Analyses	Acceptance Criteria
	8.xii Tests will be performed to verify as-built FWS CIVs close within the isolation response times.	8.xii The following as-built FWS CIVs close within the required times: ≤ 5 seconds FWS-SMV-512 A,B,C,D ≤ 15 seconds EFS-MOV-019 A,B,C,D
	8.xiii Tests will be performed to verify as-built SGBS CIVs close within the isolation response times.	8.xiii The following as-built SGBS CIVs close within the required times: ≤ 15 seconds SGS-AOV-031 A,B,C,D ≤ 20 seconds SGS-AOV-001 A,B,C,D
	8.xiv Tests will be performed to verify as-built CCWS CIVs close within the isolation response times.	8.xiv The following as-built CCWS CIVs close within the required times: ≤ 20 seconds NCS-MOV-511 NCS-MOV-517 ≤ 40 seconds NCS-MOV-402 A,B NCS-MOV-436 A,B NCS-MOV-438 A,B NCS-MOV-531 NCS-MOV-537
	8.xv Tests will be performed to verify as-built PSS CIVs close within the isolation response times.	8.xv The following as-built PSS CIVs close within the required times: ≤ 15 seconds PSS-AOV-003 PSS-MOV-006 PSS-MOV-013 PSS-MOV-023 PSS-MOV-031 A,B PSS-AOV-062 A,B,C,D PSS-AOV-063
9. The Containment Isolation System (CIS) provides a safety-related function of containment isolation to prevent or limit the release of fission products to the environment in the event of an accident.	9. Tests will be performed to verify the as-built containment isolation valve leakage rates in accordance with 10 CFR 50, Appendix J, Type C tests.	9. The as-built containment isolation valve leak rates are less than the allowable leakage rate specified in 10 CFR 50, Appendix J.

Table 2.11.2-2 Containment Isolation System Inspections, Tests, Analyses, and Acceptance Criteria (Sheet 8 of 10)

Design Commitment	Inspections, Tests, Analyses	Acceptance Criteria
10. Controls are provided in the MCR to open and close the remotely operated valves identified in Table 2.11.2-3.	10. Tests will be performed on the as-built remotely operated valves identified in Table 2.11.2-3 using controls in the as-built MCR.	10. Controls in the as-built MCR open and close the as-built remotely operated valves identified in Table 2.11.2-3.
11.a Displays identified in Table 2.11.2-3 are provided in the MCR.	11.a Inspection will be performed for retrievability of the displays identified in Table 2.11.2-3 in the as-built MCR.	11.a Displays identified in Table 2.11.2-3 can be retrieved in the as-built MCR.
11.b Displays and controls identified in Table 2.11.2-3 are provided in the RSC.	11.b.i Inspection will be performed for retrievability of the displays identified in Table 2.11.2-3 in the as-built RSC.	11.b.i Displays identified in Table 2.11.2-3 can be retrieved in the as-built RSC.
	11.b.ii Tests of the as-built RSC control functions identified in Table 2.11.2-3 will be performed.	11.b.ii Controls in the as-built RSC operate each as-built equipment identified in Table 2.11.2-3 with an RSC control function.
12. The motor-operated, air-operated and check valves, identified in Table 2.11.2-1 as having an active safety function, perform an active safety function to change position as indicated in the table.	12.a Type tests or a combination of type tests and analyses of the motor-operated and air-operated valves identified in Table 2.11.2-1 will be performed that demonstrate the capability of the valve to operate under its design conditions.	12.a A report exists and concludes that each motor-operated and air-operated valve changes position as identified in Table 2.11.2-1 under design conditions.
	12.b Tests of the as-built motor-operated and air-operated valves identified in Table 2.11.2-1 will be performed under preoperational flow, differential pressure, and temperature conditions.	12.b Each as-built motor-operated and air-operated valves changes position as indicated in Table 2.11.2-1 under preoperational test conditions.
	12.c Inspections will be performed of the as-built motor-operated and air-operated valves identified in Table 2.11.2-1.	12.c Each as-built motor-operated and air-operated valve identified in Table 2.11.2-1 is bounded by the type tests, or a combination of type tests and analyses.

Table 2.11.2-2 Containment Isolation System Inspections, Tests, Analyses, and Acceptance Criteria (Sheet 9 of 10)

Design Commitment	Inspections, Tests, Analyses	Acceptance Criteria
	12.d Tests of the as-built check valves with active safety functions identified in Table 2.11.2-1 will be performed under preoperational test pressure, temperature, and fluid flow conditions.	12.d Each as-built check valve change position as indicated in Table 2.11.2-1 under preoperational test conditions.
13. After loss of motive power, the remotely operated valves, identified in Table 2.11.2-1, assume the indicated loss of motive power position.	13. Tests of the as-built remotely operated valves identified in Table 2.11.2-1 will be performed under the conditions of loss of motive power.	13. Upon loss of motive power, each as-built remotely operated valve identified in Table 2.11.2-1 assumes the indicated loss of motive power position.
14. Containment penetrations are isolated automatically during an SBO event with alternate ac power sources unavailable.	14. Tests of the as-built valves will be performed under the conditions that SBO occurs and alternate ac power sources are not available.	14. Upon loss of ac power condition, each as-built remotely operated valve identified as the following can be closed automatically. CVS-MOV-203, 204 LMS-AOV-104, 105 IAS-MOV-002 VCS-AOV-306, 307, 356, 357

Table 2.11.2-2 Containment Isolation System Inspections, Tests, Analyses, and Acceptance Criteria (Sheet 10 of 10)

Design Commitment	Inspections, Tests, Analyses	Acceptance Criteria
15. Remotely operated CIVs located inside and outside the containment in series on the same penetration are powered from different Class 1E divisions.	15. Inspection of the remotely operated CIVs located inside and outside the containment in series on the same penetration will be performed.	15. The following CIVs located inside and outside the containment in series on the same penetration are powered from different Class 1E divisions.

Inside containment	Outside containment
RCS-AOV-147	RCS-AOV-148
CVS-AOV-005	CVS-AOV-006
CVS-MOV-203	CVS-MOV-204
NCS-MOV-436A NCS-MOV-447A	NCS-MOV-438A NCS-MOV-448A
NCS-MOV-436B NCS-MOV-447B	NCS-MOV-438B NCS-MOV-448B
LMS-AOV-052	LMS-AOV-053
LMS-AOV-055	LMS-AOV-056 LMS-AOV-060
LMS-LCV-010A	LMS-LCV-010B
LMS-AOV-104	LMS-AOV-105
PSS-AOV-003 PSS-MOV-006 PSS-MOV-013	PSS-MOV-031A
PSS-MOV-023	PSS-MOV-031B
PSS-AOV-062A PSS-AOV-062B PSS-AOV-062C PSS-AOV-062D	PSS-AOV-063
RWS-MOV-002	RWS-MOV-004
VCS-AOV-306	VCS-AOV-307
VCS-AOV-305	VCS-AOV-304
VCS-AOV-356	VCS-AOV-357
VCS-AOV-355	VCS-AOV-354
VWS-MOV-422	VWS-MOV-407
RMS-MOV-001	RMS-MOV-002
IGS-AOV-002	IGS-AOV-001

Table 2.11.2-3 Containment Isolation System Equipment Alarms, Displays, and Control Functions

Equipment Name	MCR/RSC Alarm	MCR Display	MCR/RSC Control Function	RSC Display
N2 Supply Line valve (RCS-AOV-132)	No	Yes	Yes	Yes
Primary Makeup Water Supply line valve (RCS-AOV-138)	No	Yes	Yes	Yes
Pressurizer Relief Tank Gas Analyzer line valves (RCS-AOV-147 and RCS-AOV-148)	No	Yes	Yes	Yes
C/V Reactor Coolant Drain Tank Gas Analysis Line valves (LMS-AOV-052 and LMS-AOV-053)	No	Yes	Yes	Yes
C/V Reactor Coolant Drain Tank N2 Supply line valves (LMS-AOV-055 and LMS-AOV-060)	No	Yes	Yes	Yes
C/V Reactor Coolant Drain Tank N2 vent line valve (LMS-AOV-056)	No	Yes	Yes	Yes
C/V Reactor Coolant Drain Pump Discharge Line valves (LMS-LCV-010A and LMS-LCV-010B)	No	Yes	Yes	Yes
C/V Sump Pump Discharge Line valves (LMS-AOV-104 and LMS-AOV-105)	No	Yes	Yes	Yes
Refueling Water Recirculation Pump Suction Line valves (RWS-MOV-002 and RWS-MOV-004)	No	Yes	Yes	Yes
Refueling Water Recirculation Pump Discharge Line valve (RWS-AOV-022)	No	Yes	Yes	Yes
Instrument Air Line valve (IAS-MOV-002)	No	Yes	Yes	Yes
Water Supply Line to Standpipe and Hose Station inside containment (FSS-AOV-001)	No	Yes	Yes	Yes
Injection Line to Reactor Cavity valve (FSS-MOV-004)	No	Yes	Yes	Yes
Containment High Volume Purge Exhaust line valves (VCS-AOV-306 and VCS-AOV-307)	No	Yes	Yes	Yes
Containment High Volume Purge Supply line valves (VCS-AOV-305 and VCS-AOV-304)	No	Yes	Yes	Yes
Containment Low Volume Purge Exhaust line valves (VCS-AOV-356 and VCS-AOV-357)	No	Yes	Yes	Yes
Containment Low Volume Purge Supply line Valves (VCS-AOV-355 and VCS-AOV-354)	No	Yes	Yes	Yes
Containment Fan Cooler Return Line valves (VWS-MOV-407 and VWS-MOV-422)	No	Yes	Yes	Yes
Containment Fan Cooler Supply Line valve (VWS-MOV-403)	No	Yes	Yes	Yes
Containment Air Sampling Return Line valve (RMS-MOV-003)	No	Yes	Yes	Yes
Containment Air Sampling Supply Line valves (RMS-MOV-001 and RMS-MOV-002)	No	Yes	Yes	Yes
CO2 Purge Line valves (IGS-AOV-002 and IGS-AOV-001)	No	Yes	Yes	Yes

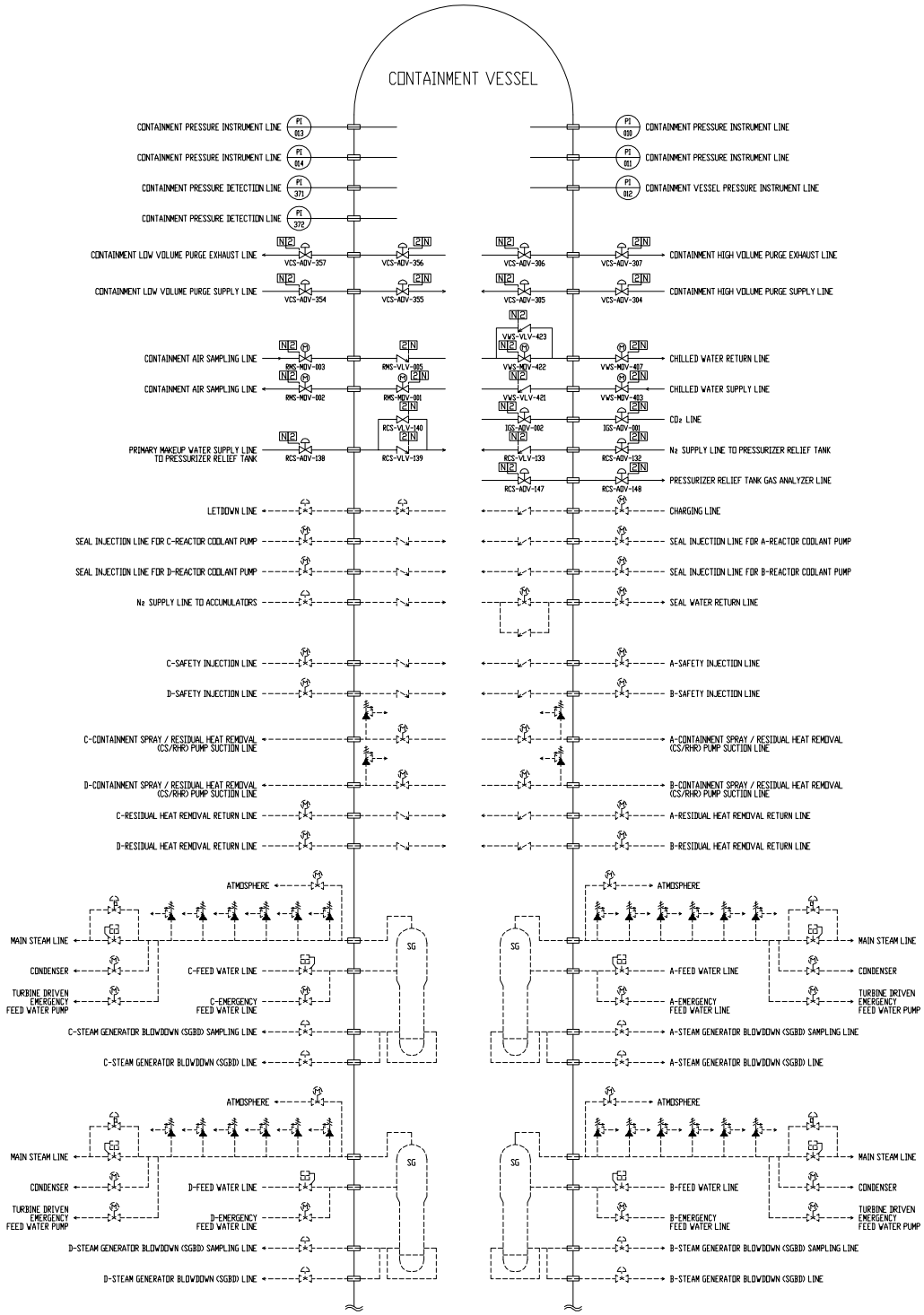

Figure 2.11.2-1 Containment Isolation Valves Basic Configuration (Sheet 1 of 2)

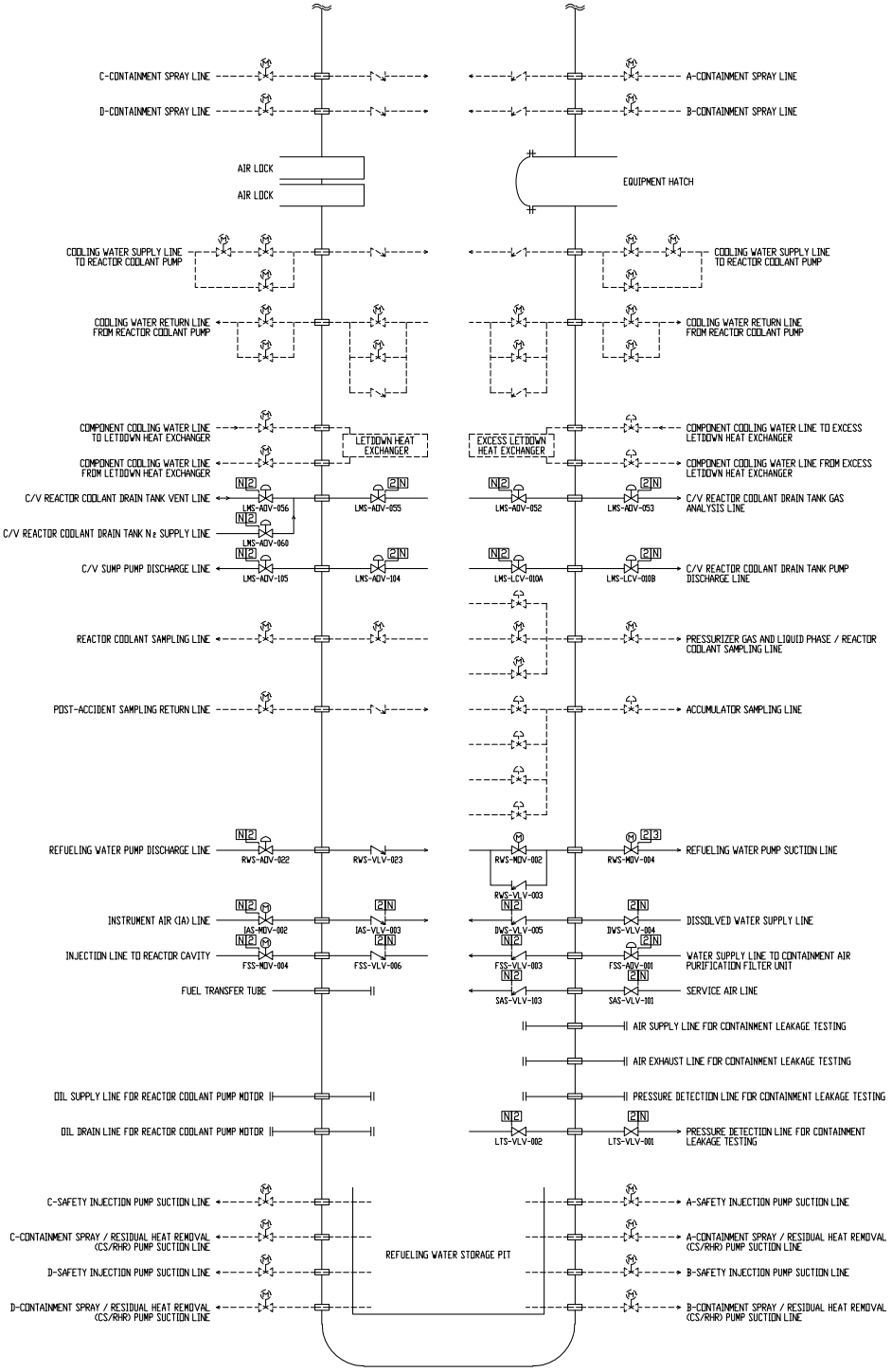

Figure 2.11.2-1 Containment Isolation Valves Basic Configuration (Sheet 2 of 2)

2.11.3 Containment Spray System (CSS)

2.11.3.1 Design Description

The CSS is a safety-related system. The purposes of the CSS are to cool the containment and remove fission products following an accident, thus the system serves as a dual-function engineered safety feature (ESF).

The CSS functions by automatically spraying borated water into the containment upon receipt of a containment spray actuation signal. This action limits the containment internal peak pressure to well below the design pressure and reduces it to approximately atmospheric pressure in a design basis LOCA or secondary system piping failure.

The CSS provides the containment isolation function, as described in Section 2.11.2, for the lines penetrating the containment.

The CSS and the residual heat removal system (RHRS) share major components which are containment spray/residual heat removal (CS/RHR) pumps and heat exchangers. The CSS includes:

- four CS/RHRS pumps (included in RHRS)
- four CS/RHRS heat exchangers (included in RHRS)
- a spray ring header composed of four concentric interconnected rings, piping, spray nozzles and valves

The CSS includes four 50% capacity CS/RHR pumps divisions. Each recirculation sump pit of the refueling water storage pit (RWSP) contains paired suction piping for the CS/RHRS pump and the safety injection pump. RWSP suction isolation valves can be closed to prevent leakage of RWSP water from CS/RHRS.

1.a The functional arrangement of the CSS is as described in the Design Description of Subsection 2.11.3.1 and in Table 2.11.3-1, and as shown in Figure 2.11.3-1.

1.b Each mechanical division of the CSS (Divisions A, B, C & D) is physically separated from the other divisions with the exception of inside the containment so as not to preclude accomplishment of the safety function.

2.a.i The ASME Code Section III components of the CSS, identified in Table 2.11.3-2, are fabricated, installed, and inspected in accordance with ASME Code Section III requirements.

2.a.ii The ASME Code Section III components of the CSS identified in Table 2.11.3-2 are reconciled with the design requirements.

2.b.i The ASME Code Section III piping of the CSS, including supports, identified in Table 2.11.3-3, is fabricated, installed, and inspected in accordance with ASME Code Section III requirements.

2.b.ii The ASME Code Section III piping of the CSS, including supports, identified in Table 2.11.3-3 is reconciled with the design requirements.

3.a Pressure boundary welds in ASME Code Section III components, identified in Table 2.11.3-2, meet ASME Code Section III requirements for non-destructive examination of welds.

3.b Pressure boundary welds in ASME Code Section III piping, identified in Table 2.11.3-3, meet ASME Code Section III requirements for non-destructive examination of welds.

4.a The ASME Code Section III components, identified in Table 2.11.3-2, retain their pressure boundary integrity at their design pressure.

4.b The ASME Code Section III piping, identified in Table 2.11.3-3, retains its pressure boundary integrity at its design pressure.

5.a The seismic Category I equipment, identified in Table 2.11.3-2, can withstand seismic design basis loads without loss of safety function.

5.b The seismic Category I piping, including supports, identified in Table 2.11.3-3 can withstand seismic design basis loads without a loss of its safety function.

6.a Class 1E equipment identified in Table 2.11.3-2 as being qualified for a harsh environment can withstand the environmental conditions that would exist before, during, and following a design basis accident without loss of safety function for the time required to perform the safety function.

6.b The Class 1E equipment, identified in Table 2.11.3-2, is powered from its respective Class 1E division.

6.c Separation is provided between redundant divisions of CSS Class 1E cables, and between Class 1E cables and non-Class 1E cable.

7.a Deleted.

7.b The CSS provides containment spray during design basis accidents.

7.c The CS/RHR pumps have sufficient net positive suction head (NPSH).

8. Controls are provided in the MCR to open and close the remotely operated valves identified in Table 2.11.3-2.

9.a The motor-operated valves and check valves, identified in Table 2.11.3-2 as having an active safety function, perform an active safety function to change position as indicated in the table.

9.b After loss of motive power, the remotely operated valves, identified in Table 2.11.3-2, assume the indicated loss of motive power position.

10.a The CS/RHR pump starts after receiving a containment spray actuation signal.

10.b The containment spray header containment isolation valves identified in Table 2.11.3-2 open upon receipt of a containment spray actuation signal.

10.c An interlock is provided for each division of CS/RHR to preclude the simultaneous opening of both the RHR discharge line containment isolation valves identified in Table 2.4.5-2 and the corresponding containment spray header containment isolation valves identified in Table 2.11.3-2.

10.d An interlock is provided for each division of CS/RHR to allow opening of the containment spray header containment isolation valves identified in Table 2.11.3-2 only if either of the corresponding two in-series CS/RHR pump hot leg isolation valves identified in Table 2.4.5-2 is closed.

11. Alarms and displays identified in Table 2.11.3-4 are provided in the MCR.

12. Alarms, displays and controls identified in Table 2.11.3-4 are provided in the RSC.

2.11.3.2 Inspections, Tests, Analyses, and Acceptance Criteria

Table 2.11.3-5 describes the ITAAC for the CSS. ITAAC Item 7 in Table 2.4.4-5 describes ITAAC for ECC/CS suction strainer performance.

The ITAAC associated with the CSS equipment, components, and piping that comprise a portion of the CIS are described in Table 2.11.2-2.

Table 2.11.3-1 Containment Spray System Piping Location

Equipment and Piping Name	Location
All CSS piping and valves and including the valves interfacing with systems of a lower classification.	Containment and Reactor Building
Containment Spray Nozzles	Containment

Table 2.11.3-2 Containment Spray System Equipment Characteristics

Equipment Name	Tag No.	ASME Code Section III Class	Seismic Category I	Remotely Operated Valve	Class 1E/ Qual. For Harsh Envir.	PSMS Control	Active Safety Function	Loss of Motive Power Position
Containment Spray Nozzles	-	2	Yes	-	-/-	-	-	-
CS/RHR Pump RWSP Suction Isolation Valves	CSS-MOV-001 A, B, C, D	2	Yes	Yes	Yes/ Yes	Remote Manual	Transfer Closed	As Is
Containment Spray Header Containment Isolation Valves	CSS-MOV-004 A, B, C, D	2	Yes	Yes	Yes/ No	Containment Spray Actuation	Transfer Open	As Is
						Remote Manual	Transfer Closed	
Containment Spray Header Containment Isolation Check Valves	CSS-VLV-005 A, B, C, D	2	Yes	-	-/-	-	Transfer Open/ Transfer Closed	-
Containment Spray Header Fire Water Supply Line Stop Valve	CSS-MOV-011	2	Yes	Yes	Yes/ No	-	-	As Is
Containment Pressure	CSS-PT-010, 011, 012, 013	-	Yes	-	Yes/Yes	-	-	-
Containment Pressure	CSS-PT-014	-	Yes	-	No/No	-	-	-
Containment Temperature	CSS-TE-020	-	Yes	-	Yes/Yes	-	-	-

Table 2.11.3-3 Containment Spray System Piping Characteristics

Pipe Line Name	ASME Code Section III Class	Seismic Category I
All CSS piping and valves and including the valves interfacing with systems of a lower classification.	2	Yes

Table 2.11.3-4 Containment Spray System Equipment Alarms, Displays, and Control Functions

Equipment Name	MCR/RSC Alarm	MCR Display	MCR/RSC Control Function	RSC Display
CS/RHR Pump RWSP Suction Isolation Valves (CSS-MOV-001 A, B, C, D)	No	Yes	Yes	Yes
Containment Spray Header Containment Isolation Valves (CSS-MOV-004 A, B, C, D)	No	Yes	Yes	Yes
Containment Spray Header Fire Water Supply Line Stop Valve (CSS-MOV-011)	No	Yes	Yes	Yes
Containment Pressure (CSS-PT-010, 011, 012, 013)	Yes	Yes	No	Yes
Containment Temperature (CSS-TE-020)	No	Yes	No	Yes

Table 2.11.3-5 Containment Spray System Inspections, Tests, Analyses, and Acceptance Criteria (Sheet 1 of 7)

Design Commitment		Inspections, Tests, Analyses		Acceptance Criteria	
1.a	The functional arrangement of the CSS is as described in the Design Description of Subsection 2.11.3.1 and in Table 2.11.3-1, and as shown in Figure 2.11.3-1.	1.a	Inspection of the as-built CSS will be performed.	1.a	The as-built CSS conforms to the functional arrangement as described in the Design Description of Subsection 2.11.3.1 and in Table 2.11.3-1, and as shown in Figure 2.11.3-1.
1.b	Each mechanical division of the CSS (Divisions A, B, C & D) is physically separated from the other divisions with the exception of inside the containment so as not to preclude accomplishment of the safety function.	1.b	Inspections and analysis of the as-built CSS will be performed.	1.b	A report exists and concludes that each mechanical division of the as-built CSS is physically separated from other divisions with the exception of inside the containment by spatial separation, barriers or enclosures so as to assure that the functions of the safety-related system are maintained.
2.a.i	The ASME Code Section III components of the CSS, identified in Table 2.11.3-2, are fabricated, installed, and inspected in accordance with ASME Code Section III requirements.	2.a.i	Inspection of the as-built ASME Code Section III components of the CSS, identified in Table 2.11.3-2, will be performed.	2.a.i	The ASME Code Section III data report(s) (certified, when required by ASME Code) and inspection reports (including N-5 Data Reports where applicable) exist and conclude that the as-built ASME Code Section III components of the CSS identified in Table 2.11.3-2 are fabricated, installed, and inspected in accordance with ASME Code Section III requirements.
2.a.ii	The ASME Code Section III components of the CSS identified in Table 2.11.3-2 are reconciled with the design requirements.	2.a.ii	A reconciliation analysis of the components identified in Table 2.11.3-2 using as-designed and as-built information and ASME Code Section III design report(s) (NCA-3550) will be performed.	2.a.ii	The ASME Code Section III design report(s) (certified, when required by ASME Code) exist and conclude that design reconciliation has been completed in accordance with the ASME Code, for the as-built ASME Code Section III components of the CSS identified in Table 2.11.3-2 . The report documents the results of the reconciliation analysis.

Table 2.11.3-5 Containment Spray System Inspections, Tests, Analyses, and Acceptance Criteria (Sheet 2 of 7)

Design Commitment		Inspections, Tests, Analyses		Acceptance Criteria	
2.b.i	The ASME Code Section III piping of the CSS, including supports, identified in Table 2.11.3-3, is fabricated, installed, and inspected in accordance with ASME Code Section III requirements.	2.b.i	Inspection of the as-built ASME Code Section III piping of the CSS, including supports, identified in Table 2.11.3-3 will be performed.	2.b.i	The ASME Code Section III data report(s) (certified when required by ASME Code) and inspection reports (including N-5 Data Reports where applicable) exist and conclude that the as-built ASME Code Section III piping of the CSS, including supports, identified in Table 2.11.3-3 is fabricated, installed, and inspected in accordance with ASME Code Section III requirements.
2.b.ii	The ASME Code Section III piping of the CSS, including supports, identified in Table 2.11.3-3 is reconciled with the design requirements.	2.b.ii	A reconciliation analysis of the piping of the CSS, including supports, identified in Table 2.11.3-3, using as-designed and as-built information and ASME Code Section III design report(s) (NCA3550) will be performed.	2.b.ii	The ASME Code Section III design report(s) (certified, when required by ASME Code) exist and conclude that design reconciliation has been completed in accordance with the ASME Code for the as-built ASME Code Section III piping of the CSS, including supports, identified in Table 2.11.3-3. The report documents the results of the reconciliation analysis.
3.a	Pressure boundary welds in ASME Code Section III components, identified in Table 2.11.3-2, meet ASME Code Section III requirements for non-destructive examination of welds.	3.a	Inspections of the as-built pressure boundary welds in ASME Code Section III components identified in Table 2.11.3-2 will be performed in accordance with the ASME Code Section III.	3.a	The ASME Code Section III code reports exist and conclude that the ASME Code Section III requirements are met for non-destructive examination of the as-built pressure boundary welds in ASME code Section III components identified in Table 2.11.3-2.
3.b	Pressure boundary welds in ASME Code Section III piping, identified in Table 2.11.3-3, meet ASME Code Section III requirements for non-destructive examination of welds.	3.b	Inspections of the as-built pressure boundary welds in ASME Code Section III piping identified in Table 2.11.3-3 will be performed in accordance with the ASME Code Section III.	3.b	The ASME Code Section III code reports exist and conclude that the ASME Code Section III requirements are met for non-destructive examination of the as-built pressure boundary welds in ASME code Section III piping identified in Table 2.11.3-3.

Table 2.11.3-5 Containment Spray System Inspections, Tests, Analyses, and Acceptance Criteria (Sheet 3 of 7)

Design Commitment		Inspections, Tests, Analyses		Acceptance Criteria	
4.a	The ASME Code Section III components, identified in Table 2.11.3-2, retain their pressure boundary integrity at their design pressure.	4.a	A hydrostatic test will be performed on the as-built components, identified in Table 2.11.3-2 required by the ASME Code Section III to be hydrostatically tested.	4.a	ASME Code Data Reports exist and conclude that the results of the hydrostatic test of the as-built components identified in Table 2.11.3-2 as ASME Code Section III conform to the requirements of the ASME Code Section III.
4.b	The ASME Code Section III piping, identified in Table 2.11.3-3, retains its pressure boundary integrity at its design pressure.	4.b	A hydrostatic test will be performed on the as-built piping, identified in Table 2.11.3-3 required by the ASME Code Section III to be hydrostatically tested.	4.b	ASME Code Data Reports exist and conclude that the results of the hydrostatic test of the as-built piping identified in Table 2.11.3-3 as ASME Code Section III conform to the requirements of the ASME Code Section III.
5.a	The seismic Category I equipment, identified in Table 2.11.3-2, can withstand seismic design basis loads without loss of safety function.	5.a.i	Inspections will be performed to verify that the as-built seismic Category I as-built equipment identified in Table 2.11.3-2 is located in a seismic Category I structure.	5.a.i	The as-built seismic Category I equipment identified in Table 2.11.3-2 is located in a seismic Category I structure.
		5.a.ii	Type tests, analyses, or a combination of type tests and analyses of seismic Category I equipment identified in Table 2.11.3-2 will be performed using analytical assumptions, or will be performed under conditions, which bound the seismic design basis requirements.	5.a.ii	A report exists and concludes that the seismic Category I equipment identified in Table 2.11.3-2 can withstand seismic design basis loads without loss of safety function.
		5.a.iii	Inspections and analyses will be performed to verify that the as-built equipment identified in Table 2.11.3-2, including anchorages, is seismically bounded by the tested or analyzed conditions.	5.a.iii	A report exists and concludes that that the as-built seismic Category I equipment identified in Table 2.11.3-2, including anchorages, is seismically bounded by the tested or analyzed conditions.

Table 2.11.3-5 Containment Spray System Inspections, Tests, Analyses, and Acceptance Criteria (Sheet 4 of 7)

Design Commitment		Inspections, Tests, Analyses		Acceptance Criteria	
5.b	The seismic Category I piping, including supports, identified in Table 2.11.3-3 can withstand seismic design basis loads without a loss of its safety function.	5.b.i	Inspections will be performed to verify that the as-built seismic Category I piping, including supports, identified in Table 2.11.3-3 is supported by a seismic Category I structure(s).	5.b.i	The as-built seismic Category I piping, including supports, identified in Table 2.11.3-3 is supported by a seismic Category I structure(s).
		5.b.ii	Inspections and analyses will be performed to verify that the as-built seismic Category I piping, including supports, identified in Table 2.11.3-3 can withstand seismic design basis loads without a loss of its safety function.	5.b.ii	A report exists and concludes that the as-built seismic Category I piping, including supports, identified in Table 2.11.3-3 can withstand seismic design basis loads without a loss of its safety function.
6.a	The Class 1E equipment identified in Table 2.11.3-2 as being qualified for a harsh environment can withstand the environmental conditions that would exist before, during, and following a design basis accident without loss of safety function for the time required to perform the safety function.	6.a.i	Type tests or a combination of type tests and analyses using the design environmental conditions, or under the conditions which bound the design environmental conditions, will be performed on Class 1E equipment identified in Table 2.11.3-2 as being qualified for a harsh environment.	6.a.i	A report exists and concludes that the Class 1E equipment identified in Table 2.11.3-2 as being qualified for a harsh environment can withstand the environmental conditions that would exist before, during, and following a design basis accident without loss of safety function for the time required to perform the safety function.
		6.a.ii	Inspection will be performed on the as-built Class 1E equipment identified in Table 2.11.3-2 as being qualified for a harsh environment and the associated wiring, cables, and terminations located in a harsh environment.	6.a.ii	The as-built Class 1E equipment and the associated wiring, cables, and terminations identified in Table 2.11.3 -2 as being qualified for a harsh environment are bounded by type tests or a combination of type tests and analyses.
6.b	Class 1E equipment, identified in Table 2.11.3-2, is powered from its respective Class 1E division.	6.b	A test will be performed on each division of the as-built equipment identified in Table 2.11.3-2 by providing a simulated test signal only in the Class 1E division under test.	6.b	The simulated test signal exists at the as-built Class 1E equipment identified in Table 2.11.3-2 under test.

Table 2.11.3-5 Containment Spray System Inspections, Tests, Analyses, and Acceptance Criteria (Sheet 5 of 7)

Design Commitment		Inspections, Tests, Analyses		Acceptance Criteria	
6.c	Separation is provided between redundant divisions of CSS Class 1E cables, and between Class 1E cables and non-Class 1E cable.	6.c	Inspections of the as-built Class 1E divisional cables will be performed.	6.c	Physical separation or electrical isolation is provided in accordance with RG 1.75, between the as-built cables of redundant CSS Class 1E divisions and between Class 1E cables and non-Class 1E cables.
7.a	Deleted.	7.a	Deleted.	7.a	Deleted.
7.b	The CSS provides containment spray during design basis accidents.	7.b	The as-built CS/RHR pump full flow tests will be performed. Analysis will be performed to convert the test results from the test conditions to the design basis condition.	7.b	A report exists and concludes that each as-built CS/RHR pump delivers no less than 2645 gpm of RWSP water into the containment under design basis conditions.
7.c	The CS/RHR pumps have sufficient net positive suction head (NPSH).	7.c	Tests to measure the as-built CS/RHR pump suction pressure will be performed. Inspection and analysis to determine NPSH available to each CS/RHR pump will be performed. The analysis will consider the vendor test results of required NPSH and the effects of: - pressure losses for pump inlet piping and components, - pressure losses for pump suction strainers due to debris blockage, - suction from the RWSP water level at the minimum value.	7.c	A report exists and concludes that the NPSH available exceeds the NPSH required.
8.	Controls are provided in the MCR to open and close the remotely operated valves identified in Table 2.11.3-2.	8.	Tests will be performed on the as-built remotely operated valves identified in Table 2.11.3-2 using controls in the as-built MCR.	8.	Controls in the as-built MCR open and close the as-built remotely operated valves identified in Table 2.11.3-2.

Table 2.11.3-5 Containment Spray System Inspections, Tests, Analyses, and Acceptance Criteria (Sheet 6 of 7)

Design Commitment		Inspections, Tests, Analyses		Acceptance Criteria	
9.a	The motor-operated valves and check valves, identified in Table 2.11.3-2 as having an active safety function, perform an active safety function to change position as indicated in the table.	9.a.i	Type tests or a combination of type tests and analyses of the motor-operated valves identified in Table 2.11.3-2 as having an active safety function will be performed that demonstrate the capability of the valve to operate under its design conditions.	9.a.i	A report exists and concludes that each motor-operated valve changes position as indicated in Table 2.11.3-2 as having an active safety function under design conditions.
		9.a.ii	Tests of the as-built motor-operated valves identified in Table 2.11.3-2 as having an active safety function will be performed under preoperational flow, differential pressure, and temperature conditions.	9.a.ii	Each as-built motor-operated valve changes position as indicated in Table 2.11.3-2 as having an active safety function under preoperational test conditions.
		9.a.iii	Inspections will be performed of the as-built motor-operated valves identified in Table 2.11.3-2 as having an active safety function.	9.a.iii	Each as-built motor-operated valve identified in Table 2.11.3-2 as having an active safety function is bounded by the type tests, or a combination of type tests and analyses.
		9.a.iv	Tests of the as-built check valves with active safety functions identified in Table 2.11.3-2 as having an active safety function will be performed under preoperational test pressure, temperature, and fluid flow conditions.	9.a.iv	Each as-built check valve changes position as indicated in Table 2.11.3-2 as having an active safety function under preoperational conditions.
9.b	After loss of motive power, the remotely operated valves, identified in Table 2.11.3-2, assume the indicated loss of motive power position.	9.b.	Tests of the as-built valves identified in Table 2.11.3-2 will be performed under the conditions of loss of motive power.	9.b	Upon loss of motive power, each as-built remotely operated valve identified in Table 2.11.3-2 assumes the indicated loss of motive power position.
10.a	The CS/RHR pump starts after receiving a containment spray actuation signal.	10.a	Tests of the as-built CS/RHR pump will be performed using a simulated signal.	10.a	The as-built CS/RHR pump starts after receiving a simulated signal.

Table 2.11.3-5 Containment Spray System Inspections, Tests, Analyses, and Acceptance Criteria (Sheet 7 of 7)

Design Commitment		Inspections, Tests, Analyses		Acceptance Criteria	
10.b	The containment spray header containment isolation valves identified in Table 2.11.3-2 open upon receipt of a containment spray actuation signal.	10.b	Tests of the as-built containment spray header containment isolation valves identified in Table 2.11.3-2 will be performed using a simulated signal.	10.b	Each as-built containment spray header containment isolation valve identified in Table 2.11.3-2 opens upon receipt of a simulated signal.
10.c	An interlock is provided for each division of CS/RHR to preclude the simultaneous opening of both the RHR discharge line containment isolation valves identified in Table 2.4.5-2 and the corresponding containment spray header containment isolation valves identified in Table 2.11.3-2.	10.c	Tests will be performed on each as-built interlock for the RHR discharge line containment isolation valves identified in Table 2.4.5-2 and the containment spray header containment isolation valves identified in Table 2.11.3-2.	10.c	Each as-built interlock for the RHR discharge line containment isolation valves identified in Table 2.4.5-2 and the corresponding containment spray header containment isolation valves identified in Table 2.11.3-2 precludes the simultaneous opening of both the RHR discharge line containment isolation valves and the corresponding containment spray header containment isolation valves.
10.d	An interlock is provided for each division of CS/RHR to allow opening of the containment spray header containment isolation valves identified in Table 2.11.3-2 only if either of the corresponding two in-series CS/RHR pump hot leg isolation valves identified in Table 2.4.5-2 is closed.	10.d	Tests will be performed on each as-built interlock for the containment spray header containment isolation valves identified in Table 2.11.3-2 and CS/RHR pump hot leg isolation valves identified in Table 2.4.5-2.	10.d	The CSS containment isolation valves identified in Table 2.11.3-2 are interlocked and are allowed to open only if either of the corresponding two in-series CS/RHR pump hot leg isolation valves identified in Table 2.4.5-2 is closed.
11.	Alarms and displays identified in Table 2.11.3-4 are provided in the MCR.	11.	Inspections will be performed for retrievability of the alarms and displays identified in Table 2.11.3-4 in the as-built MCR.	11.	Alarms and displays identified in Table 2.11.3-4 can be retrieved in the as-built MCR.
12.	Alarms, displays and controls identified in Table 2.11.3-4 are provided in the RSC.	12.i	Inspections will be performed for retrievability of the alarms and displays identified in Table 2.11.3-4 in the as built RSC.	12.i	Alarms and displays identified in Table 2.11.3-4 can be retrieved in the as-built RSC.
		12.ii	Tests of the as-built RSC control functions identified in Table 2.11.3-4 will be performed.	12.ii	Controls in the as-built RSC operate the as-built equipment identified in Table 2.11.3-4 with an RSC control function.

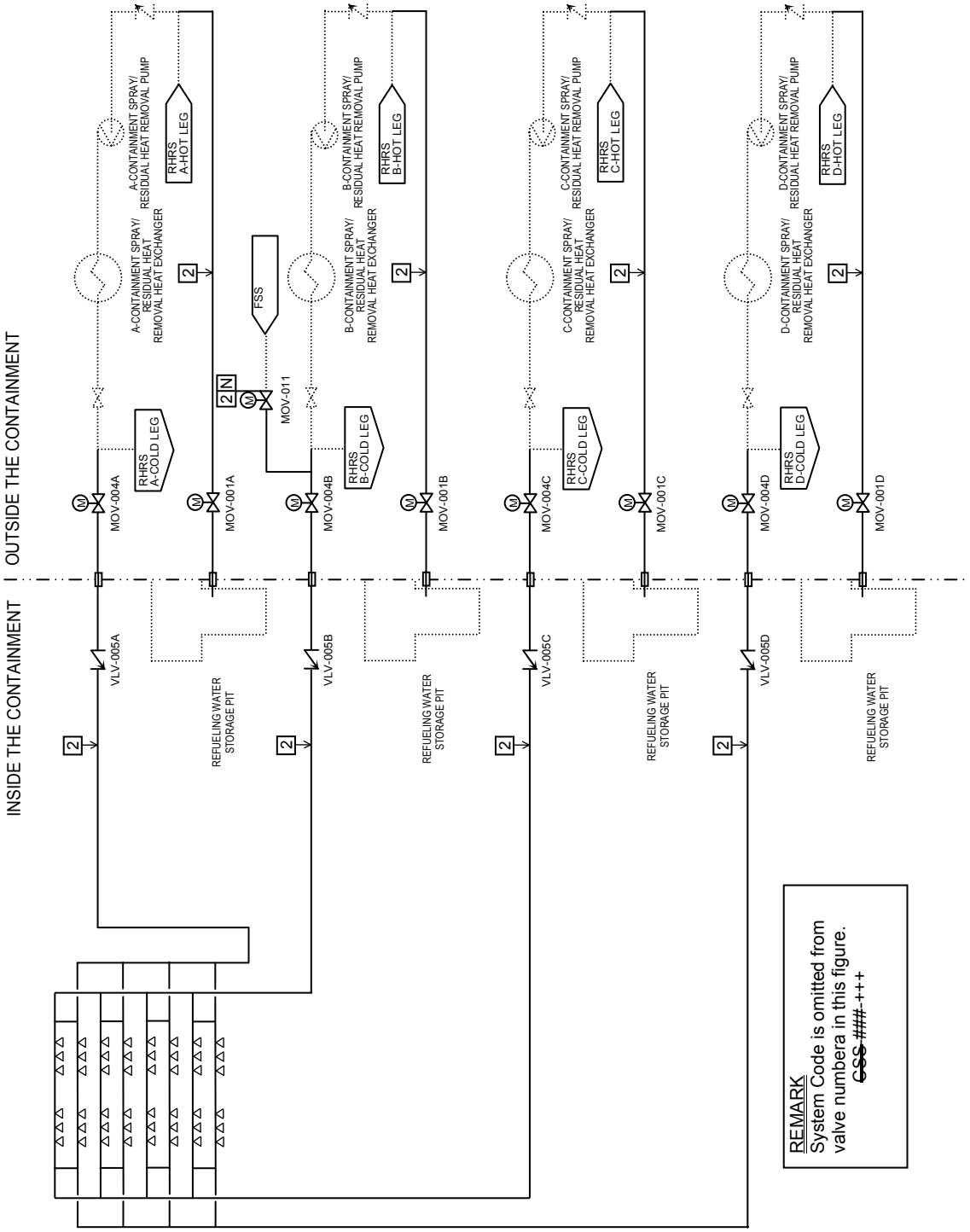

Figure 2.11.3-1 Containment Spray System

2.11.4 Containment Hydrogen Monitoring and Control System (CHS)

2.11.4.1 Design Description

The CHS is non safety-related system. The purpose of the CHS is to continuously monitor hydrogen concentration within the containment and to reduce the concentration of this combustible gas.

The CHS consists of the hydrogen monitoring system and the hydrogen ignition system. The hydrogen monitoring system consists of a single hydrogen detector located outside the containment which measures hydrogen concentration from the air extracted inside the containment. The hydrogen ignition system consists of 20 igniters strategically located in containment areas and subcompartments where hydrogen may be produced, transit, or collect. The hydrogen igniters are designed to burn hydrogen continuously at a low concentration and to burn off hydrogen to maintain hydrogen concentration below the low limit of global burn (approximately 10% hydrogen in air), thereby preventing further hydrogen accumulation that could become a threat to containment integrity.

1. The functional arrangement of the CHS is as described in the Design Description of Subsection 2.11.4.1 and as shown in Figure 2.11.4-1.

2. Deleted.

3. The hydrogen igniters, identified on Figure 2.11.4-1, are energized after receiving an ECCS actuation signal.

4. An alarm and a display for containment hydrogen concentration measured by a hydrogen concentration detector of the CHS are provided in the MCR.

5. Controls are provided in the MCR to energize and deenergize the twenty hydrogen igniters of the CHS.

6. The twenty hydrogen igniters of the CHS shown in Figure 2.11.4-1 are powered by two non-class 1E buses (i.e., ten igniters per bus) with non-class 1E alternate ac (AAC) power sources.

2.11.4.2 Inspections, Tests, Analyses, and Acceptance Criteria

Table 2.11.4-1 describes the ITAAC for the CHS.

Table 2.11.4-1 Containment Hydrogen Monitoring and Control System Inspections, Tests, Analyses, and Acceptance Criteria

Design Commitment	Inspections, Tests, Analyses	Acceptance Criteria
1. The functional arrangement of the CHS is as described in the Design Description of Subsection 2.11.4.1 and as shown in Figure 2.11.4-1.	1. Inspection of the as-built CHS will be performed.	1. The as-built CHS conforms to the functional arrangement as described in the Design Description of Subsection 2.11.4.1 and as shown in Figure 2.11.4-1.
2. Deleted.	2. Deleted.	2. Deleted.
3. The hydrogen igniters, identified on Figure 2.11.4-1, are energized after receiving an ECCS actuation signal.	3. Tests will be performed on the as-built hydrogen igniters, identified on Figure 2.11.4-1, using a simulated signal.	3. The as-built hydrogen igniters, identified on Figure 2.11.4-1, are energized after receiving a simulated signal.
4. An alarm and a display for containment hydrogen concentration measured by a hydrogen concentration detector of the CHS are provided in the MCR.	4. Inspection will be performed for retrievability of the alarm and display for containment hydrogen concentration measured by a hydrogen concentration detector of the CHS in the as-built MCR.	4. An alarm and a display for containment hydrogen concentration measured by a hydrogen concentration detector of the CHS can be retrieved in the as-built MCR.
5. Controls are provided in the MCR to energize and deenergize the twenty hydrogen igniters of the CHS.	5. Tests will be performed on the twenty as-built hydrogen igniters using controls in the as-built MCR.	5. Controls in the as-built MCR energize and deenergize each of the twenty as-built hydrogen igniters of the CHS.
6. The twenty hydrogen igniters of the CHS shown in Figure 2.11.4-1 are powered by two non-class 1E buses (i.e., ten igniters per bus), with non-class 1E alternate ac (AAC) power sources.	6. Inspections will be performed on the twenty as-built hydrogen igniters of the CHS.	6. The twenty as-built hydrogen igniters of the CHS shown in Figure 2.11.4-1 are powered by two non-class 1E buses (i.e., ten igniters per bus), with non-class 1E AAC power sources.

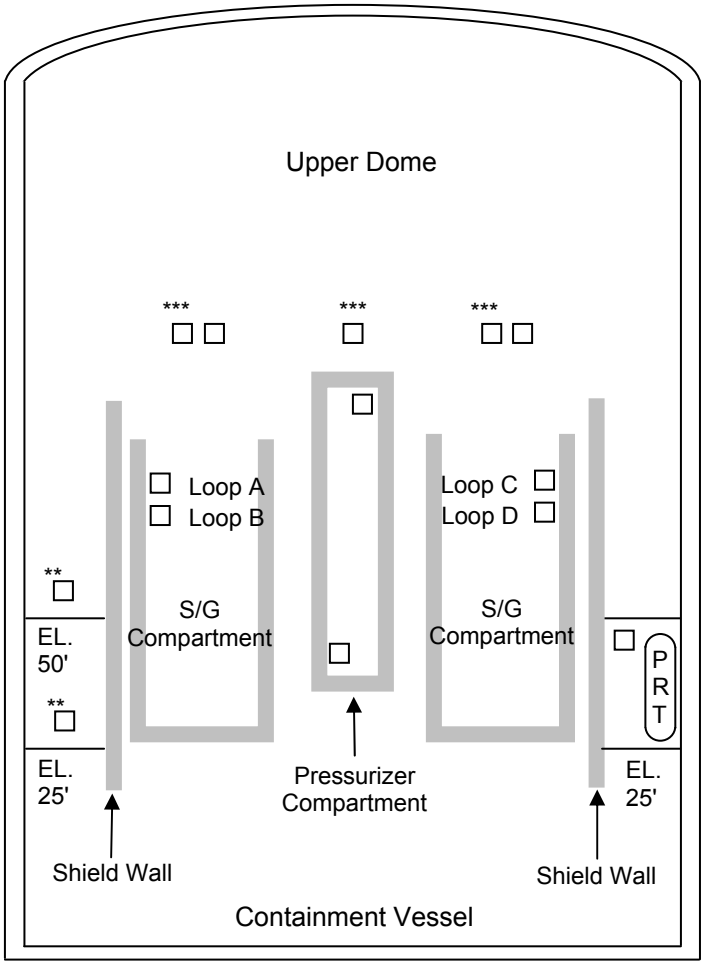

Notes:

This schematic provides only approximate location of Igniters and is not to scale

** Igniters located in ~90^0 locations around the CV, two each are powered from separate power supply panels

*** Igniters installed above S/G and Pressurizer compartments

□ Hydrogen Igniters

Figure 2.11.4-1 Containment Hydrogen Monitoring and Control System

2.12 PHYSICAL SECURITY HARDWARE

2.12.1 Design Description

The physical security system provides physical features to detect, delay, assist response to, and defend against the design basis threat (DBT) for radiological sabotage. Key elements of the physical security system design for the US-APWR standard plant certified design include physical barriers, an intrusion detection system, and communication systems.

1.a Vital equipment is located only within vital areas.

1.b Reserved.

2.a Reserved.

2.b Reserved.

2.c Reserved.

3.a Reserved.

3.b Reserved.

3.c Reserved.

4.a Reserved.

4.b Reserved.

4.c Reserved.

5. Reserved.

6.a The external walls, doors, ceilings and floors in the main control room and the central alarm station are bullet resistant.

6.b Reserved.

7. Reserved.

8.a Reserved.

8.b Reserved.

9 Reserved.

10.a Unoccupied vital areas are locked and alarmed with activated intrusion detection systems that annunciate in the central alarm station.

10.b Reserved.

11.a.i Security alarm annunciation and video assessment information are available in the central alarm station.

11.a.ii Reserved.

11.b.i The central alarm station is located inside a protected area and the interior of the alarm station is not visible from the perimeter of the protected area.

11.b.ii Reserved.

11.c Reserved.

11.d Reserved.

11.e Reserved.

12. The secondary security power supply system for alarm annunciator equipment and non-portable communications equipment is located within a vital area.

13.a Security alarm devices including transmission lines to annunciators are tamper indicating and self-checking (i.e., an automatic indication is provided when failure of the alarm system or a component occurs or when on standby power), and alarm annunciation indicates the type of alarm (e.g., intrusion alarms, emergency exit alarm) and location.

13.b.i Intrusion detection and assessment systems are designed to provide visual display and audible annunciation of alarms in the central alarm station.

13.b.ii Reserved.

14. Intrusion detection systems equipment records onsite security alarm annunciation including the location of the alarm, false alarm, alarm check, and tamper indication and the type of alarm, location, alarm circuit, date and time .

15.a Emergency exits through vital area boundaries are alarmed and secured by locking devices that allow prompt egress during an emergency.

15.b Reserved.

16.a.i The central alarm station has conventional (land line) telephone service with local law enforcement authorities and a system for communication with the main control room .

16.a.ii Reserved.

16.b.i The central alarm station is capable of continuous communication with security personnel.

16.b.ii Reserved.

16.c.i Non-portable communications equipment in the central alarm station remains operational from an independent power source in the event of loss of normal power.

16.c.ii Reserved.

2.12.2 Inspections, Tests, Analyses, and Acceptance Criteria

Table 2.12-1 provides the ITAAC for the physical security hardware.

Table 2.12-1 Physical Security Hardware Inspections, Tests, Analyses, and Acceptance Criteria (Sheet 1 of 4)

Design Commitment	Inspections, Tests, Analyses	Acceptance Criteria
1.a Vital equipment is located only within a vital area.	1.a Inspections will be performed of vital equipment locations.	1.a Vital equipment is located only within a vital area.
1.b Reserved.	1.b Reserved.	1.b Reserved.
2.a Reserved.	2.a Reserved.	2.a Reserved.
2.b Reserved.	2.b Reserved.	2.b Reserved.
2.c Reserved.	2.c Reserved.	2.c Reserved.
3.a Reserved.	3.a Reserved.	3.a Reserved.
3.b Reserved.	3.b Reserved.	3.b Reserved.
3.c Reserved.	3.c Reserved.	3.c Reserved.
4.a Reserved.	4.a Reserved.	4.a Reserved.
4.b Reserved.	4.b Reserved.	4.b Reserved.
4.c Reserved.	4.c Reserved.	4.c Reserved.
5. Reserved.	5. Reserved.	5. Reserved.
6.a The external walls, doors, ceilings and floors in the main control room and the central alarm station are bullet resistant.	6.a Type test, analysis or a combination of type test and analysis of the external walls, doors, ceilings, floors in the main control room and the central alarm station will be performed.	6.a A report exists and concludes that the external walls, doors, ceilings, floors in the main control room and the central alarm station are bullet resistant to at least Underwriters Laboratories Ballistic Standard 752, Level 4, or National Institute of Justice Standard 0108.01, Type III.
6.b Reserved.	6.b Reserved.	6.b Reserved.
7. Reserved.	7. Reserved.	7. Reserved.
8.a Reserved.	8.a Reserved.	8.a Reserved.
8.b Reserved.	8.b Reserved.	8.b Reserved.
9. Reserved.	9. Reserved.	9. Reserved.

Table 2.12-1 Physical Security Hardware Inspections, Tests, Analyses, and Acceptance Criteria (Sheet 2 of 4)

Design Commitment	Inspections, Tests, Analyses	Acceptance Criteria
10.a Unoccupied vital areas are locked and alarmed with activated intrusion detection systems that annunciate in the central alarm station.	10.a Tests, inspections, or a combination of tests and inspections of unoccupied vital areas intrusion detection equipment and locking devices will be performed.	10.a Unoccupied vital areas are locked and intrusion is detected and annunciated in the central alarm station.
10.b Reserved.	10.b Reserved.	10.b Reserved.
11.a.i Security alarm annunciation and video assessment information are available in the central alarm station.	11.a.i Tests, inspections or a combination of tests and inspections of alarm annunciation and video assessment equipment will be performed.	11.a.i Security alarm annunciation and video assessment information is available in the central alarm station.
11.a.ii Reserved	11.a.ii Reserved	11.a.ii Reserved
11.b.i The central alarm station is located inside a protected area and the interior is not visible from the perimeter of the protected area.	11.b.i Inspection of the central alarm station location will be performed.	11.b.i The central alarm station is located inside a protected area and the interior of the central alarm station is not visible from the perimeter of the protected area.
11.b.ii Reserved	11.b.ii Reserved	11.b.ii Reserved
11.c Reserved	11.c Reserved	11.c Reserved
11.d Reserved	11.d Reserved	11.d Reserved
11.e Reserved	11.e Reserved	11.e Reserved
12. Secondary security power supply system for alarm annunciator equipment and non-portable communications equipment is located within a vital area.	12. Inspections of the secondary security power supply system will be performed.	12. The secondary security power system for alarm annunciator equipment and non-portable communications equipment is located within a vital area.

Table 2.12-1 Physical Security Hardware Inspections, Tests, Analyses, and Acceptance Criteria (Sheet 3 of 4)

Design Commitment	Inspections, Tests, Analyses	Acceptance Criteria
13.a Security alarm devices including transmission lines to annunciators are tamper indicating and self-checking, (e.g. an automatic indication is provided when failure of the alarm system or a component occurs or when on standby power), and alarm annunciation indicates the type of alarm, (e.g., intrusion alarms, emergency exit alarm) and location.	13.a Tests will be performed on security alarm devices and transmission lines.	13.a Security alarm devices including transmission lines to annunciators are tamper indicating and self-checking (e.g., an automatic indication is provided when failure of the alarm system or a component occurs, or when the system is on standby power) and the alarm annunciation indicates the type of alarm, (e.g., intrusion alarms, emergency exit alarm) and location.
13.b.i Intrusion detection and assessment systems are designed to provide visual display and audible annunciation of alarms in the central alarm station.	13.b.i Tests will be performed on Intrusion detection and assessment systems.	13.b.i The intrusion detection system provides a visual display and audible annunciation of alarms in the central alarm station.
13.b.ii Reserved	13.b.ii Reserved	13.b.ii Reserved
14. Intrusion detection systems equipment records onsite security alarm annunciation including the location of the alarm, false alarm, alarm check, and tamper indication and the type of alarm, location, alarm circuit, date and time.	14. Tests will be performed on the intrusion detection systems recording equipment.	14. Intrusion detection systems recording equipment is capable of recording each onsite security alarm annunciation including the location of the alarm, false alarm, alarm check, and tamper indication and the type of alarm, location, alarm circuit, date and time.
15.a Emergency exits through vital area boundaries are alarmed and secured by locking devices that allow prompt egress during an emergency.	15.a Test, inspection or a combination of tests and inspections of emergency exits through vital area boundaries will be performed.	15.a Emergency exits through vital area boundaries are alarmed and secured by locking devices that allow prompt egress during an emergency.
15.b Reserved.	15.b Reserved.	15.b Reserved.

Table 2.12-1 Physical Security Hardware Inspections, Tests, Analyses, and Acceptance Criteria (Sheet 4 of 4)

Design Commitment	Inspections, Tests, Analyses	Acceptance Criteria
16.a.i The central alarm station has conventional (land line) telephone service with local law enforcement authorities and a system for communication with the main control room.	16.a.i Tests, inspections or a combination of tests and inspections of the central alarm station communications capability with local law enforcement authorities and main control room will be performed.	16.a.i The central alarm station is equipped with conventional (land line) telephone service with local law enforcement authorities and has a system for communication with the main control room.
16.a.ii Reserved	16.a.ii Reserved	16.a.ii Reserved
16.b.i The central alarm station is capable of continuous communication with security personnel.	16.b.i Tests, inspections or a combination of tests and inspections of the central alarm station continuous communication capabilities will be performed.	16.b.i The central alarm station is capable of continuous communication with security officers, watchmen or armed response individuals, or other security personnel that have responsibilities during a contingency response event.
16.b.ii Reserved	16.b.ii Reserved	16.b.ii Reserved
16.c.i Non-portable communications equipment in the central alarm station remains operational from an independent power source in the event of loss of normal power.	16.c.i Tests, inspections, or a combination of tests and inspections of the non-portable communications equipment will be performed.	16.c.i All non-portable communication devices (including conventional telephone systems) in the central alarm station are wired to an independent power supply that enables those systems to remain operational (without disruption) during the loss of normal power.
16.c.ii Reserved	16.c.ii Reserved	16.c.ii Reserved

2.13 DESIGN RELIABILITY ASSURANCE PROGRAM

2.13.1 Design Description

The purpose of the US-APWR design reliability assurance program (D-RAP) is to provide reasonable assurance that:

- The US-APWR is designed and constructed in a manner that is consistent with the assumptions and risk insights for the risk-significant structures, systems, and components (SSCs).
- The risk-significant SSCs function reliably when challenged.

The risk-significant SSCs including both safety-related and non safety-related SSCs are identified for inclusion in the D-RAP using the results of the probabilistic risk assessment (PRA), an expert panel, deterministic methods, or using other methods.

1. For structures, systems, and components within the scope of the reliability assurance program (RAP SSCs), the design is consistent with risk insights and key assumptions from probabilistic, deterministic, and other methods of analysis used to identify and quantify risk.

2.13.2 Inspections, Tests, Analyses, and Acceptance Criteria

Table 2.13-1 describes the ITAAC for the D-RAP.

Table 2.13-1 Design Reliability Assurance Program Inspections, Tests, analyses, and Acceptance Criteria

Design Commitment	Inspections, Tests, Analyses	Acceptance Criteria
1. For structures, systems, and components within the scope of the reliability assurance program (RAP SSCs), the design is consistent with risk insights and key assumptions from probabilistic, deterministic, and other methods of analysis used to identify and quantify risk.	1. An analysis will be performed to demonstrate that the initial design of all RAP SSCs (design approved for procurement and installation) has been completed in accordance with the D-RAP.	1. A report exists and concludes that, for all SSCs that are within the scope of RAP when the COL is issued, the initial design has been subject to the applicable reliability assurance activities of the D-RAP.

2.14 INITIAL TEST PROGRAM

2.14.1 Design Description

The initial test program (ITP) of the US-APWR is described in this section. Activities associated with the ITP are part of the initial plant startup. The ITP consists of preoperational and initial startup tests and is conducted in accordance with an approved manual containing ITP administrative controls.

The ITP administrative controls assure the qualification of the ITP participants, test procedure development, review, approval, evaluation of test results, and test record retention including test procedures. Tests are conducted in accordance with individual approved test procedures. Copies of the approved test procedures are made available to NRC personnel prior to their intended use for the preoperational tests and prior to the scheduled initial fuel loading for the startup tests.

Preoperational tests are conducted to demonstrate that SSCs operate in accordance with the design criteria. The preoperational tests include, as appropriate, functional tests, logic and interlock tests, system operational and performance tests, and system expansion and vibration measurements.

The initial fuel loading marks the beginning of startup tests. Startup tests are performed after completion of preoperational tests to confirm the design requirements and to demonstrate that plant systems meet performance requirements and that the plant can operate in an integrated fashion. Startup tests include initial fuel loading, initial criticality, low power testing, and power ascension testing.

Power ascension tests are performed once the operating characteristics of the reactor are verified during low power tests. During power ascension testing, the power level is increased to full licensed power in prescribed stages defined in approved test procedures.

2.14.2 Inspections, Tests, Analyses, and Acceptance Criteria

This section does not include ITAAC.

3.0 INTERFACE REQUIREMENTS

3.1 Design Description

This section identifies the safety significant interface requirements between the US-APWR standard plant design and the site-specific design.

The US-APWR standard plant design consists of several buildings (reactor building including the prestressed concrete containment vessel and containment internal structure, power source buildings, auxiliary building, turbine building and access building); and the systems and equipment located in those buildings. For some systems included in the standard plant design, the associated structure (e.g., the power source fuel storage vaults and essential service water pipe tunnel) is a site-specific structure. As allowed by the regulations, conceptual designs for systems that are not part of the US-APWR standard plant design are included in the DCD for the purpose of allowing the NRC to evaluate the overall acceptability of the standard plant design. However, the final details of these conceptual designs are subject to change due to site-specific conditions.

Although descriptions of the power source fuel storage vaults (PSFSVs) and the essential service water pipe tunnel (ESWPT) are provided in this DCD, the structural design of the PSFSVs and ESWPT, including seismic and dynamic qualification, as applicable, are finalized based on the site-specific arrangement.

An interface requirement as specified in this section applies to a system, a portion of a system, or a structure that must be added or connected to the standard plant design to complete the design of the US-APWR at a specific site.

A COL applicant referencing the US-APWR certified design is responsible for site-specific designs that meet the interface requirements and for verifying that the as-built structures, systems, and components conform to the site-specific designs using an ITAAC process that is similar to that provided for the certified design.

3.2 Interface Requirements

3.2.1 Ultimate Heat Sink

Ultimate heat sink (UHS) is a safety-related system and is site-specific. The following are site-specific interface requirements:

a. The UHS system design meets the divisional separation requirements of the essential service water system (ESWS) and the UHS is capable of performing its safety functions under design basis event conditions and coincident single failure with or without offsite power available.

b. The safety related, pressure retaining components, and their supports, are designed, constructed and inspected in accordance with ASME Code Section III, if applicable to the site-specific design.

c. The maximum supply water temperature is 95 °F under the peak heat loads condition to provide sufficient cooling capacity to ESWS.

d. The UHS water level is maintained such that available net positive suction head (NPSH) is greater than the ESW pump's required NPSH during all plant operating conditions including normal plant operations, abnormal and accident conditions. The ESW pump operation does not cause vortex formation at minimum allowed UHS water level.

e. The UHS system has main control room (MCR) and remote shutdown console (RSC) alarms and displays for UHS water level and water temperature.

f. The UHS system has MCR and RSC controls for UHS components' active safety functions if applicable to the site-specific design.

g. UHS components that have protection and safety monitoring system (PSMS) control (if applicable to the site-specific design) perform an active safety function after receiving a signal from PSMS.

h. The UHS can provide the required cooling for a minimum of 30 days without make-up during accident conditions.

i. The UHS system is designed to prevent water hammer.

3.2.2 Fire Protection System

Portions of the fire protection system are site specific. The following are the site-specific interface requirements:

a. The seismic standpipe system can be supplied from a seismic Category I water source with a capacity of at least 18,000 gallons.

b. The fire protection system water supply is from two separate, reliable freshwater sources; or from one freshwater lake or pond of sufficient size with two separate and independent suctions in one or more intake structure(s).

3.2.3 Essential Service Water System

Portions of the ESWS are site specific due to its dependence on the site-specific UHS system. The following are the site-specific interface requirements:

a. The ESWS piping in the ESWPT that connects to the UHS system is designed, constructed and inspected in accordance with ASME Code Section III.

b. System layout of the ESWS and UHS system is verified to assure that the pressures in the ESWS and UHS system are above saturation conditions during all plant operating conditions including normal plant operations, abnormal and accident conditions.

c. The sum of the ESW pump shutoff head and static head is such that the ESW system design pressure is not exceeded.

d. The ESWS is designed to prevent water hammer.

e. The ESWS can provide cooling water required for the component cooling water (CCW) heat exchangers and the essential chiller units of the essential chilled water system (ECWS) during all plant operating conditions, including normal plant operations, abnormal and accident conditions.

3.2.4 Electrical System

The offsite power system and components are sitespecific. The following features are site-specific interface requirements:

a. The electrical system has a minimum of two independent offsite transmission circuits from the transmission network (TN) to the safety buses with no intervening non-safety buses (direct connection).

b. The offsite TN voltage variations during steady state operation do not cause voltage variations beyond an acceptable tolerance of the loads' nominal ratings.

c. The offsite TN normal steady state frequency is within an acceptable tolerance of 60Hz during recoverable periods of instability.

d. The offsite transmission circuits have the capacity and capability to power the required loads during steady state, transient, and postulated events and accident conditions.

e. There is physical separation and electrical independence between the offsite circuits and onsite class 1E electrical system and components.

f. Lightning protection and grounding features exist for the systems and components of the offsite circuits from the TN to the safety buses.

g. The electrical system has alarms and displays for monitoring the switchyard status.

h. The electrical system has the capability to automatically fast transfer from the preferred power supply to the non-preferred power supply.

i. The switchyard agreement and protocols between the nuclear power plant and the TN owner/operator assess the risk and probability of a loss of offsite power due to performing maintenance activities on the electrical system.

j. The electrical system is designed to minimize the probability of losing electric power from any of the remaining supplies as a result of, or coincident with, the loss of power generated by the nuclear unit, the loss of power from the TN, or the loss of power from the onsite electric power supplies.