DESIGN CONTROL DOCUMENT FOR THE
US-APWR
Chapter 11
Radioactive Waste Management

MUAP- DC011

REVISION 3

MARCH 2011

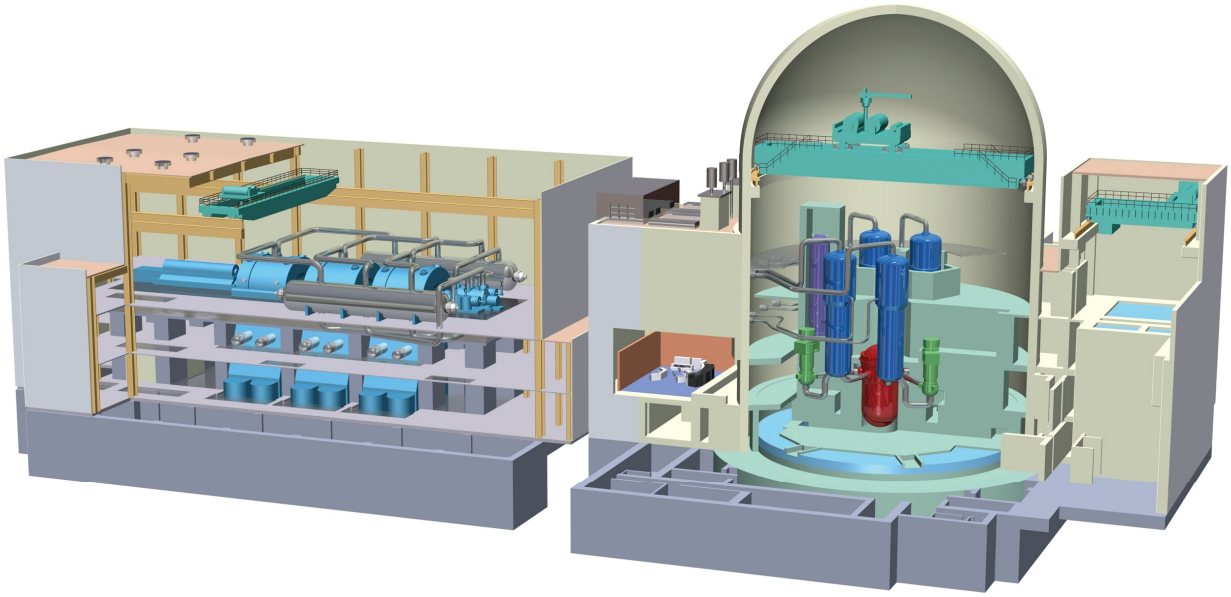

MITSUBISHI HEAVY INDUSTRIES, LTD.

©2011
Mitsubishi Heavy Industries, Ltd.
All Rights Reserved

© 2011

MITSUBISHI HEAVY INDUSTRIES, LTD.

All Rights Reserved

This document has been prepared by Mitsubishi Heavy Industries, Ltd. ("MHI") in connection with the U.S. Nuclear Regulatory Commission's ("NRC") licensing review of MHI's US-APWR nuclear power plant design. No right to disclose, use or copy any of the information in this document, other than by the NRC and its contractors in support of the licensing review of the US-APWR, is authorized without the express written permission of MHI.

This document contains technology information and intellectual property relating to the US-APWR and it is delivered to the NRC on the express condition that it not be disclosed, copied or reproduced in whole or in part, or used for the benefit of anyone other than MHI without the express written permission of MHI, except as set forth in the previous paragraph.

This document is protected by the laws of Japan, U.S. copyright law, international treaties and conventions, and the applicable laws of any country where it is being used.

Mitsubishi Heavy Industries, Ltd.

16-5, Konan 2-chome, Minato-ku

Tokyo 108-8215 Japan

CONTENTS

Page

11.0 RADIOACTIVE WASTE MANAGEMENT 11.1-1

11.1 Source Terms 11.1-1

11.1.1 Design Basis Reactor Coolant Activity 11.1-1

11.1.1.1 Fission Products 11.1-1

11.1.1.2 Corrosion Products 11.1-3

11.1.1.3 Tritium 11.1-3

11.1.1.4 Carbon-14 ..... 11.1-3

11.1.1.5 Argon-41 ..... 11.1-4

11.1.1.6 Nitrogen-16 ..... 11.1-4

11.1.2 Design Basis Secondary Coolant Activity 11.1-4

11.1.2.1 Steam Generator Secondary Side Water Activity 11.1-4

11.1.2.2 Steam Generator Secondary Side Steam Activity 11.1-6

11.1.3 Realistic Reactor Coolant and Secondary Coolant Activity 11.1-6

11.1.4 Process Leakage Sources 11.1-7

11.1.5 Combined License Information 11.1-7

11.1.6 References 11.1-7

11.2 Liquid Waste Management System 11.2-1

11.2.1 Design Bases 11.2-1

11.2.1.1 Design Objectives 11.2-1

11.2.1.2 Design Criteria 11.2-1

11.2.1.3 Other Design Considerations 11.2-3

11.2.1.4 Method of Treatment 11.2-4

11.2.1.5 Site-Specific Cost-Benefit Analysis 11.2-5

11.2.1.6 Mobile or Temporary Equipment 11.2-6

11.2.2 System Description 11.2-6

11.2.2.1 Liquid Waste Processing System Operation 11.2-8

11.2.2.2 Detailed System Component Description 11.2-12

11.2.3 Radioactive Effluent Releases 11.2-15

11.2.3.1 Radioactive Effluent Releases and Dose Calculation in Normal Operation 11.2-15

11.2.3.2 Radioactive Effluent Releases due to Liquid Containing Tank Failures 11.2-16

11.2.3.3 Offsite Dose Calculation Manual 11.2-16

11.2.4 Testing and Inspection Requirements 11.2-16

11.2.5 Combined License Information 11.2-17

11.2.6 References 11.2-18

11.3 Gaseous Waste Management System 11.3-1

11.3.1 Design Bases 11.3-1

11.3.1.1 Design Objectives 11.3-1

11.3.1.2 Design Criteria 11.3-1

11.3.1.3 Other Design Considerations 11.3-2

11.3.1.4 Method of Treatment 11.3-3

11.3.1.5 Site-Specific Cost-Benefit Analysis 11.3-4

11.3.1.6 Mobile or Temporary Equipment 11.3-5

11.3.1.7 Seismic Design 11.3-5

11.3.2 System Description 11.3-5

11.3.2.1 Component Description 11.3-7

11.3.2.2 Design Features 11.3-10

11.3.3 Radioactive Effluent Releases 11.3-11

11.3.3.1 Radioactive Effluent Releases and Dose Calculation in Normal Operation 11.3-11

11.3.3.2 Radioactive Effluent Releases and Dose Calculation due to Gaseous Waste Management System Leak or Failure 11.3-12

11.3.3.3 Offsite Dose Calculation Manual 11.3-14

11.3.4 Ventilation System 11.3-14

11.3.5 Testing and Inspection Requirements 11.3-15

11.3.5.1 Instrumentation Testing Requirements 11.3-15

11.3.5.2 Preoperational Inspection 11.3-15

11.3.6 Instrumentation Requirements 11.3-15

11.3.7 Combined License Information 11.3-15

11.3.8 References 11.3-16

11.4 Solid Waste Management System 11.4-1

11.4.1 Design Bases 11.4-1

11.4.1.1 Design Objectives 11.4-1

11.4.1.2 Design Criteria 11.4-1

11.4.1.3 Other Design Considerations 11.4-3

11.4.1.4 Method of Treatment 11.4-4

11.4.1.5 Site-Specific Cost-Benefit Analysis 11.4-5

11.4.1.6 Mobile or Temporary Equipment 11.4-6

11.4.2 System Description 11.4-6

11.4.2.1 Dry Solid Waste 11.4-7

11.4.2.2 Wet Solid Waste 11.4-9

11.4.2.3 Packaging, Storage, and Shipping 11.4-11

11.4.2.4 Effluent Controls 11.4-12

11.4.2.5 Operation and Personnel Doses 11.4-13

11.4.3 Radioactive Effluent Releases 11.4-13

11.4.3.1 Radioactive Effluent Monitoring 11.4-13

11.4.3.2 Process Control Program 11.4-14

11.4.3.3 Packaged Waste Storage and Shipment 11.4-14

11.4.4 Component Description 11.4-15

11.4.4.1 Tanks 11.4-15

11.4.4.2 Pumps 11.4-15

11.4.4.3 Piping 11.4-16

11.4.4.4 Venting and Relief Valve 11.4-16

11.4.4.5 Mobile De-watering System 11.4-16

11.4.5 Malfunction Analysis 11.4-16

11.4.6 Testing and Inspection Requirements 11.4-17

11.4.7 Instrumentation Requirements 11.4-17

11.4.8 Combined License Information 11.4-18

11.4.9 References 11.4-19

11.5 Process Effluent Radiation Monitoring and Sampling Systems 11.5-1

11.5.1 Design Bases 11.5-1

11.5.1.1 Design Objective 11.5-1

11.5.1.2 Design Criteria 11.5-2

11.5.2 System Descriptions 11.5-3

11.5.2.1 Process and Effluent Radiological Monitoring and Sampling System 11.5-3

11.5.2.2 Process Gas and Particulate Monitors Component Description 11.5-4

11.5.2.3 Process Liquid Monitors Component Description 11.5-8

11.5.2.4 Effluent Gaseous Monitors Component Description 11.5-10

11.5.2.5 Effluent Liquid Monitor Component Description 11.5-12

11.5.2.6 Reliability and Quality Assurance 11.5-13

11.5.2.7 Determination of Instrumentation Alarm Setpoints for Effluents 11.5-13

11.5.2.8 Compliance with Effluent Release Requirements 11.5-14

11.5.2.9 Offsite Dose Calculation Manual 11.5-14

11.5.2.10 Radiological Environmental Monitoring Program 11.5-14

11.5.2.11 Site –Specific Cost-Benefit Analysis 11.5-15

11.5.2.12 Basis of PERMS range 11.5-15

11.5.3 Effluent Monitoring and Sampling 11.5-15

11.5.4 Process Monitoring and Sampling 11.5-16

11.5.5 Combined License Information 11.5-16

11.5.6 References 11.5-17

TABLES

		Page
Table 11.1-1	Parameters Used to Calculate Design Basis Fission Product Activities	11.1-8
Table 11.1-2	Design Basis Reactor Coolant Activity	11.1-9
Table 11.1-3	Tritium Source	11.1-10
Table 11.1-4	Parameters Used to Calculate Secondary Coolant Activity	11.1-11
Table 11.1-5	Design Basis SG Secondary Side Water Activity	11.1-12
Table 11.1-6	Design Basis SG Secondary Side Steam Activity	11.1-13
Table 11.1-7	Adjustment Factors (ANSI/ANS 18.1-1999 Table 11)	11.1-14
Table 11.1-8	Parameters Used to Describe Realistic Sources	11.1-16
Table 11.1-9	Realistic Source Terms	11.1-17
Table 11.2-1	Equipment Codes (Extracted from Table 1, RG 1.143)	11.2-21
Table 11.2-2	Waste Liquid Inflow into the LWMS	11.2-22
Table 11.2-3	Component Data – Tanks	11.2-23
Table 11.2-4	Component Data – Pumps	11.2-25
Table 11.2-5	Component Data – (Filters)	11.2-26
Table 11.2-6	Component Data – (Ion Exchangers)	11.2-26
Table 11.2-7	Decontamination Factors	11.2-27
Table 11.2-8	Summary of Tank Indication, Level Annunciations, and Overflows	11.2-28
Table 11.2-9	Input Parameters for the PWR-GALE Code	11.2-29
Table 11.2-10	Liquid Releases Calculated by the PWR-GALE Code (Ci/yr)	11.2-31
Table 11.2-11	Liquid Releases with Maximum Defined Fuel Defects (Ci/yr)	11.2-33
Table 11.2-12	Comparison of Annual Average Liquid Release Concentrations with 10 CFR 20 (Expected Releases)	11.2-35
Table 11.2-13	Comparison of Annual Average Liquid Release Concentrations with 10 CFR 20 (Maximum Releases)	11.2-37
Table 11.2-14	Input Parameters for the LADTAP II Code	11.2-39
Table 11.2-15	Individual Dose from Liquid Effluents	11.2-40
Table 11.2-16	Parameters for Calculation of Source term for Liquid Containing Tank Failures	11.2-41

Table 11.2-17 Source term for Liquid Containing Tank Failures 11.2-42

Table 11.2-18 Equipment Malfunction Analysis..... 11.2-44

Table 11.2-19 Expected Inputs to the LWMS, Processing Time and Days of Holdup 11.2-46

Table 11.2-20 LWMS Component Classification 11.2-47

Table 11.2-21 Typical Service Level II Concrete Systems Epoxy Coatings 11.2-48

Table 11.3-1 System Design Parameters..... 11.3-19

Table 11.3-2 GWMS Major Equipment Design Information..... 11.3-20

Table 11.3-3 Equipment Malfunction Analysis..... 11.3-22

Table 11.3-4 Input Parameters and Calculation Results of Radioactive Effluent Releases and Dose due to the Gaseous Waste Management System Leak or Failures 11.3-24

Table 11.3-5 Calculated Annual Average Release of Airborne Radionuclides by the PWR-GALE Code, Revision 1 (Ci/yr)..... 11.3-26

Table 11.3-6 Comparison of Calculated Offsite Airborne Concentrations with 10 CFR 20 Limits (Expected Releases)..... 11.3-32

Table 11.3-7 Comparison of Calculated Offsite Airborne Concentrations with 10 CFR 20 Limits (Maximum Releases)..... 11.3-33

Table 11.3-8 Input Parameters for the GASPAR II Code 11.3-34

Table 11.3-9 Calculated Dose from Gaseous Effluents..... 11.3-35

Table 11.3-10 Instrument Indication and Alarm Information Page 11.3-37

Table 11.3-11 Equipment Codes and Standards for Radwaste Equipment (from Table 1, RG 1.143)..... 11.3-38

Table 11.3-12 Component Classification..... 11.3-39

Table 11.4-1 Expected Waste Volume Generated Annually by Each “Wet” Solid Waste Source 11.4-22

Table 11.4-2 Estimate of Expected Annual “Dry” Solid Wastes and Waste Classification 11.4-22

Table 11.4-3 Calculated Shipped Solid Waste Volumes and Classification ... 11.4-22

Table 11.4-4 Solid Waste Management System Component Data Summary 11.4-23

Table 11.4-5 Equipment Malfunction Analysis..... 11.4-24

Table 11.4-6 Instrument Indication and Alarm Information Page 11.4-25

Table 11.4-7 Typical Service Level II Concrete Systems Epoxy Coatings 11.4-26

Table 11.4-8 Component Classification..... 11.4-27

Table 11.5-1 Process Gas and Particulate Monitors 11.5-20
Table 11.5-2 Process Liquid Monitors 11.5-21
Table 11.5-3 Effluent Gas Monitors 11.5-22
Table 11.5-4 Effluent Liquid Monitors 11.5-23
Table 11.5-5 Samplers 11.5-24

FIGURES

		Page
Figure 11.2-1	Liquid Waste Processing System Process Flow Diagram	11.2-49
Figure 11.3-1	Gaseous Waste Management System Process Flow Diagram	11.3-40
Figure 11.4-1	Process Flow Diagram of SWMS Dry Active Waste and Spent Filter Handling Sub-system	11.4-28
Figure 11.4-2	Process Flow Diagram of SWMS Spent Resin and Charcoal Handling Sub-System	11.4-29
Figure 11.4-3	Process Flow Diagram of SWMS Oil and Sludge Handling System	11.4-30
Figure 11.5-1a	Typical Containment Atmosphere Radiation Monitor Schematic	11.5-25
Figure 11.5-1b	Typical HVAC Duct Gas Radiation Monitor Schematic	11.5-26
Figure 11.5-1c	Typical Line Radiation Monitor Schematic	11.5-27
Figure 11.5-1d	Typical Process In-Line Radiation Monitor Schematic	11.5-28
Figure 11.5-1e	Typical Main Control Room HVAC Radiation Monitor Schematic	11.5-29
Figure 11.5-1f	Typical Offline Radiation Monitor Arrangement	11.5-30
Figure 11.5-1g	Typical Building Floor Drain Sump Offline Radiation Monitor Schematic	11.5-31
Figure 11.5-1h	Typical Plant Vent Radiation Monitor Schematic	11.5-32
Figure 11.5-1i	Typical Condenser Vacuum Pump Radiation Monitor Schematic	11.5-33
Figure 11.5-1j	Typical Gland Steam Radiation Monitor Schematic	11.5-34
Figure 11.5-2a	Location of Radiation Monitors at Plant (Power Block at Elevation -26’-4”)	11.5-35
Figure 11.5-2b	Location of Radiation Monitors at Plant (Power Block at Elevation -8’-7”)	11.5-36
Figure 11.5-2c	Location of Radiation Monitors at Plant (Power Block at Elevation 3’-7”)	11.5-37
Figure 11.5-2d	Location of Radiation Monitors at Plant (Power Block at Elevation 13’-6”)	11.5-38
Figure 11.5-2e	Location of Radiation Monitors at Plant (Power Block at Elevation 25’-3”)	11.5-39

Figure 11.5-2f Location of Radiation Monitors at Plant (Power Block at Elevation 35’-2”) 11.5-40

Figure 11.5-2g Location of Radiation Monitors at Plant (Power Block at Elevation 50’-2”) 11.5-41

Figure 11.5-2h Location of Radiation Monitors at Plant (Power Block at Elevation 76’-5”) 11.5-42

Figure 11.5-2i Location of Radiation Monitors at Plant (Power Block at Elevation 101’-0”) 11.5-43

Figure 11.5-2j Location of Radiation Monitors at Plant (Power Block at Elevation 115’-6”) 11.5-44

Figure 11.5-2k Location of Radiation Monitors at Plant (Power Block Section A-A) 11.5-45

ACRONYMS AND ABBREVIATIONS

A/B	auxiliary building
AC/B	access building
ACC	accumulator
ALARA	as low as reasonably achievable
ASME	American Society of Mechanical Engineers
ANS	American Nuclear Society
ANSI	American National Standards Institute
AOO	anticipated operational occurrence
ASTM	American Society for Testing and Materials
BTP	branch technical position
CCTV	closed captioned television
CCW	component cooling water
CCWS	component cooling water system
CFR	Code of Federal Regulations
COL	Combined License
COLA	Combined License Application
CPS	condensate polishing system
CVCS	chemical and volume control system
CVDT	containment vessel reactor coolant drain tank
DCD	Design Control Document
DF	decontamination factor
DOT	Department of Transportation
EAB	exclusion area boundary
ECL	effluent concentration limit
ESW	essential service water
ESWS	essential service water system
FSAR	final safety analysis report
GDC	general design criteria
GWMS	gaseous waste management system
HEPA	high-efficiency particulate air
HT	holdup tank
HVAC	heating, ventilation, and air conditioning
Hx	heat exchanger
LWMS	liquid waste management system
MCR	main control room
NEI	Nuclear Energy Institute
NRC	U.S. Nuclear Regulatory Commission

ACRONYMS AND ABBREVIATIONS (CONTINUED)

OBE	operating-basis earthquake
PERMS	process effluent radiation monitoring and sampling system
P&ID	piping and instrumentation diagram
PMW	primary makeup water
PS/B	power source building
PWR	pressurized-water reactor
QAP	quality assurance program
R/B	reactor building
RCA	radiological controlled area
RCP	reactor coolant pump
RCS	reactor coolant system
RCL	reactor coolant loop
RG	regulatory guide
RWSAT	refueling water storage auxiliary tank
SFPC	spent fuel pit cooling
SFPCS	spent fuel pit cooling and purification system
SG	steam generator
SRST	spent resin storage tank
SSC	structure, system, and component
SWMS	solid waste management system
T/B	turbine building
TSC	technical support center
US-APWR	United States - Advanced Pressurized Water Reactor
VCT	volume control tank
WHT	waste holdup tank

11.0 RADIOACTIVE WASTE MANAGEMENT

11.1 Source Terms

This section presents information on the source terms of radioactive material generated within the reactor core and transferred to the gaseous and liquid radioactive waste management systems. Through potential defects in the fuel cladding, fission products generated within the reactor core have the potential of leaking to the reactor coolant system (RCS) during normal operation and during anticipated operational occurrences (AOOs). The activation of corrosion products and the activation of other constituents in the reactor coolant (i.e., producing H-3, C-14, Ar-41 and N-16) are additional potential sources of radioactivity.

Two source term models are utilized to calculate the radionuclide concentrations in the reactor coolant and the secondary coolant. The first model is a design basis source term model, which serves as a conservative basis on the assumption of a design basis fuel defects. This design basis source term provides a design basis for the radwaste system design, effluent monitoring design, and shielding requirements.

The second model is a realistic source term model which represents the expected average concentrations based on industry data from operating pressurized-water reactor (PWR) plants. The radionuclide concentrations in the reactor coolant and the secondary coolant are calculated based on American National Standards Institute (ANSI) /American Nuclear Society (ANS)-18.1 (Ref. 11.1-1) and NUREG-0017 (Ref. 11.1-2). This realistic source term provides the basis for calculating the annual release of radioactive materials through the liquid and gaseous effluents.

11.1.1 Design Basis Reactor Coolant Activity

11.1.1.1 Fission Products

The parameters used in the calculation of the reactor coolant fission product concentrations, including pertinent information relating to the coolant cleanup flow rate, effective demineralizer flow, and volume control tank (VCT) noble gas stripping characteristics are presented in Table 11.1-1.

The fission product concentrations in the reactor coolant is calculated based on the assumption that 1% of the core thermal power is produced by fuel rods containing small cladding defects. It is also assumed that the small cladding defects are distributed uniformly throughout the reactor core. A failed fuel fraction of 0.01 is significantly greater than the fuel defect level of operating PWR plants.

The reactor coolant activity is determined by the maximum core inventories per nuclide based on time-dependent fission product core inventories that are calculated by the ORIGEN code (Ref. 11.1-3).

The design basis activities in the reactor coolant are based on 1% of fuel defects. In the technical specifications, the administrative value for the reactor coolant activities are set to a lower values than the design basis values to impose a more rigorous operation management. The reactor coolant activity of the total noble gas is set to 300 μCi/g (Xe-

133 equivalent) and the reactor coolant activity of the total iodine to 1 μCi/g (I-131 equivalent), which are rounded down values of the design basis activities.

The maximum concentrations of radionuclides in the reactor coolant resulting from fuel defects are calculated using the following set of differential equations.

For parent nuclides in the coolant:

$$\frac{dN_{Cp}}{dt} = \frac{FR_p N_{Fp}}{M_C} - \left[\lambda_p + \frac{\beta}{B_O - \beta t}\left(\frac{1}{DF_p}\right) + \frac{Q_L}{M_C}\left(\frac{DF_p - 1}{DF_p} + F_{Sp}\right)\right] N_{Cp} \qquad \text{Eq. 11.1-1}$$

For daughter nuclides in the coolant:

$$\frac{dN_{Cd}}{dt} = \frac{FR_d N_{Fd}}{M_C} + f_p \lambda_p N_{Cp} - \left[\lambda_d + \frac{\beta}{B_O - \beta t}\left(\frac{1}{DF_d}\right) + \frac{Q_L}{M_C}\left(\frac{DF_d - 1}{DF_d} + F_{Sd}\right)\right] N_{Cd} \qquad \text{Eq. 11.1-2}$$

Where:

N_C = Concentration of nuclide in the reactor coolant (atoms/g)

N_F = Number of nuclide in the fuel (atoms)

t = Operating time (s)

R = Fission product escape rate (s^{-1})

F = Fuel defects

M_C = Reactor coolant mass (g)

λ = Decay constant (s^{-1})

B_O = Initial boron concentration (ppm)

β = Boron dilution rate (ppm/s)

DF = Decontamination factor of demineralizer

Q_L = Reactor coolant letdown flow rate (g/s)

f = Fraction yield of radioactive decay product

F_S = Stripping fraction of VCT

Subscript “p” refers to the parent nuclide.

Subscript “d” refers to the daughter nuclide.

The results of the calculations are listed in Table 11.1-2. The operation time indicated in Table 11.1-1 is the designed maximum time (the planned cycle duration is up to 24 months), therefore the activities tabulated are the values represent the maximum concentration, which is expected to occur during the equilibrium fuel cycle.

11.1.1.2 Corrosion Products

The activities of corrosion products are determined based on the existing plant data and are independent of the fuel defect level; these are given in Table 11.1-2.

11.1.1.3 Tritium

Tritium (H-3) is produced within the reactor coolant through the activation of soluble boron and soluble lithium contained within the reactor coolant. The presence of burnable neutron absorbers is another source of H-3 within the reactor core. The major source of H-3 is a fission product in the fuel (ternary fission) which can enter the reactor coolant system through the fuel cladding. Total H-3 production from both fission and activation is presented in Table 11.1-3. Within the coolant system, H-3 principally exists in combination with hydrogen in the tritiated oxide form. In this form, H-3 can not be easily removed from the coolant system. Therefore, it can not be effectively treated through cleanup processes. The activity of H-3 in the secondary side water and steam is entirely controlled by the loss of water from the reactor coolant system through primary-to-secondary leakage. A typical activity of H-3 in the reactor coolant is 1 μCi/g, as indicated in Table 11.1-9. A typical activity of H-3 common to the secondary side water and steam is 0.001 μCi/g, as stated in Table 11.1-9. This activity is calculated based on a primary-to-secondary leakage rate of 75 lb/day with a moderate amount of condensate recycle. At higher primary-to-secondary leakage rate, up to and including 150 gallons per day, and with full recycle of condensate, tritium concentration is progressively higher, approaching reactor coolant concentration.

11.1.1.4 Carbon-14

C-14 is produced through the activation of constituents such as N-14 and O-17 within the coolant. The activity of C-14 is less than 0.05 μCi/g based on 260 GBq/GWe/a (Ref. 11.1-4) of the annual generation rate in the reactor coolant and the volume of the reactor coolant.

11.1.1.5 Argon-41

Ar-41 is produced through the activation of Ar-40 within the coolant. The activity of Ar-41 is less than 0.5 μCi/g based on the production by the $^{40}Ar(n, \gamma)^{41}Ar$ reaction in the core region and the volume of the reactor coolant.

11.1.1.6 Nitrogen-16

N-16 is produced through the activation of O-16 within the coolant. N-16 is of significant importance as it is a strong emitter of gamma radiation. However, it is not a significant concern outside the containment vessel (C/V) because of short half-life of 7.35 seconds. The presence of N-16 in the reactor coolant is discussed further in Chapter 12, Section 12.2.

11.1.2 Design Basis Secondary Coolant Activity

Any radioactive material in the secondary coolant system would be due to leakage from the reactor coolant system through steam generator (SG) tube defects. The primary-to-secondary leak rate is therefore the determining factor in the calculation of the concentration of radioactive materials within the secondary coolant system.

The radionuclide concentrations in the reactor coolant leaking into the secondary coolant system are listed in Table 11.1-2. Using these concentrations and the parameters presented in Table 11.1-4, the radionuclide concentrations in the secondary coolant can be determined.

11.1.2.1 Steam Generator Secondary Side Water Activity

The maximum concentrations of radionuclides in the secondary side water in the SG resulting from the reactor coolant leakage are calculated using the following differential equations.

For parent nuclides in the coolant:

$$M_S \frac{dN_{Sp}}{dt} = LN_{Cp} - \left(\frac{DF_{Bp} - 1}{DF_{Bp}} Q_B + a \frac{DF_{Fp} - 1}{DF_{Fp}} Q_V P + Q_L P + M_S \lambda_p \right) N_{Sp} \qquad \text{Eq. 11.1-3}$$

For daughter nuclides in the coolant:

$$M_S \frac{dN_{Sd}}{dt} = LN_{Cd} + f_p M_S \lambda_p N_{Sp}$$

$$-\left(\frac{DF_{Bd}-1}{DF_{Bd}}Q_B + a\frac{DF_{Fd}-1}{DF_{Fd}}Q_V P + Q_L P + M_S \lambda_d\right)N_{Sd} \qquad \text{Eq. 11.1-4}$$

Where:

N_S = Concentration of nuclide in the secondary side water (atoms/g)

N_V = Concentration of nuclide in the secondary side steam (atoms/g)

$$N_V = N_S P$$

P = Partition factor

N_C = Concentration of nuclide in the reactor coolant (atoms/g)

t = Operating time (s)

L = Primary-to-secondary leakage (g/s)

M_S = Secondary coolant mass in SG (g)

λ = Decay constant (s^{-1})

a = Fraction of feedwater through the condensate polishing system

DF_B = Decontamination factor of steam generator blowdown demineralizer

DF_F = Decontamination factor of condensate polishing system

Q_B = Total SG blowdown flow rate (g/s)

Q_V = Total main Steam flow rate (g/s)

Q_L = Secondary coolant letdown flow rate (g/s)

f = Fraction yield of radioactive decay product

Subscript “p” refers to the parent nuclide.

Subscript “d” refers to the daughter nuclide.

Design basis radionuclide concentrations in the SG secondary side water are listed in Table 11.1-5.

11.1.2.2 Steam Generator Secondary Side Steam Activity

Maximum concentrations of radionuclides in the secondary side steam in the SG are calculated using the following equations.

For noble gas nuclides in the secondary side steam:

$$N_V = \frac{LN_C}{Q_V} \qquad \text{Eq. 11.1-5}$$

For other nuclides in the secondary side steam:

$$N_V = N_S P \qquad \text{Eq. 11.1-6}$$

Where:

N_V = Concentration of nuclide in the secondary side steam (atoms/g)

N_S = Concentration of nuclide in the secondary side water (atoms/g)

P = Partition factor

N_C = Concentration of nuclide in the reactor coolant (atoms/g)

L = Primary-to-secondary leakage (g/s)

Q_V = Total main steam flow rate (g/s)

The design basis radionuclide concentrations in the SG secondary side steam are listed in Tables 11.1-6.

11.1.3 Realistic Reactor Coolant and Secondary Coolant Activity

The realistic source term represents the expected average concentrations of radionuclides contained in the reactor coolant and the secondary coolant. These concentrations are calculated according to the modeling procedures in ANSI/ANS-18.1 (Ref. 11.1-1) and NUREG-0017 (Ref. 11.1-2). The reference plant values provided in ANSI/ANS-18.1 (Ref. 11.1-1) are adjusted to be consistent with the US-APWR plant values listed in Table 11.1-8 by using adjustment factors. The calculation method is also in compliance with Regulatory Guide (RG) 1.112 (Ref. 11.1-5).

The adjustment factors provided in ANSI/ANS-18.1 (Ref. 11.1-1) are classified into 6 element classes and 2 nuclides of Zn-65 and Co-58 as listed in Table11.1-7. (ANSI/ANS-18.1-1999 Table 11) However, in the calculation in this chapter, the adjustment factor for element class 6 is also applied to Zn-65 and Co-58 for simplification, because contribution of these two nuclides to offsite dose is not significant based on the calculation results discussed in Section 11.2.3 and Section 11.3.3.

The radionuclide concentrations are calculated based on the parameters presented in Table 11.1-8. The evaluated reactor coolant and secondary coolant activities are listed in Table 11.1-9.

11.1.4 Process Leakage Sources

Process leakage results in the release of radioactive material, primarily noble gases and volatile fission products, to plant areas, and subsequently to the environment. Radioactive material could leak from the liquid systems and become airborne through the ventilation systems of the plant buildings. To minimize the possibility of this source of radioactivity, liquids leaking from the process systems are collected and routed to the liquid radwaste system, as further described in Section 11.2. The airborne concentrations resulting from process leakage are discussed in the airborne release estimates in Chapter 12, Section 12.2.

11.1.5 Combined License Information

No additional information is required to be provided by a combined license (COL) applicant in connection with this section.

11.1.6 References

11.1-1 Radioactive Source Term for Normal Operation of Light Water Reactors, ANSI/ANS-18.1-1999, American National Standards Institute, American Nuclear Society. September 1999.

11.1-2 Calculation of Releases of Radioactive Materials in Gaseous and Liquid Effluents from Pressurized Water Reactors (PWR-GALE Code), NUREG-0017, Rev. 1, U.S. Nuclear Regulatory Commission, Washington, DC, April 1985.

11.1-3 ORIGEN 2.2 Isotope Generation and Depletion Code - Matrix Exponential Method, RSICC Computer Code Collection CCC-371, June. 2002

11.1-4 Management of Waste Containing Tritium and Carbon-14, IAEA Technical Report Series No.421, International Atomic Energy Agency, July 2004.

11.1-5 Calculation of Releases of Radioactive Materials in Gaseous and Liquid Effluents from Pressurized Water Reactors, Regulatory Guide 1.112, Rev. 1. U.S. Nuclear Regulatory Commission, Washington, DC, March 2007.

Table 11.1-1 Parameters Used to Calculate Design Basis Fission Product Activities

Core thermal power (MWt)	4,451
Reactor coolant mass (lb)	646,000
Reactor coolant letdown flow rate (gpm)	180
Fuel defects	0.01
Fission product escape rate (s^{-1})	
Kr and Xe isotopes	6.5E-08
Br, Rb, I, and Cs isotopes	1.3E-08
Mo isotopes	2.0E-09
Te isotopes	1.0E-09
Sr and Ba isotopes	1.0E-11
All other isotopes	1.6E-12
Decontamination factor of CVCS mixed bed demineralizer:	
Kr and Xe isotopes	1
Br and I isotopes	100
Cs and Rb isotopes	2
Other isotopes	50
Decontamination factor of CVCS cation-bed demineralizer:	
Kr and Xe isotopes	1
Br and I isotopes	1
Cs and Rb isotopes	10
Other isotopes	10
Stripping fractions of VCT:	
Kr-83m	6.2E-01
Kr-85m	4.0E-01
Kr-85	3.2E-05
Kr-87	7.0E-01
Kr-88	5.1E-01
Xe-131m	6.8E-03
Xe-133m	3.6E-02
Xe-133	1.5E-02
Xe-135m	8.8E-01
Xe-135	1.7E-01
Xe-137	9.6E-01
Xe-138	8.9E-01
Initial boron concentration(ppm)	1,300
Boron dilution rate (ppm/day)	1.573
Operation time (days/cycle)	731

Table 11.1-2 Design Basis Reactor Coolant Activity

Nuclide	Activity (μCi/g)	Nuclide	Activity (μCi/g)
Kr-83m	4.6E-01	Rb-86	7.5E-03
Kr-85m	1.8E+00	Rb-88	4.3E+00
Kr-85	9.3E+01	Rb-89	9.9E-02
Kr-87	1.2E+00	Sr-89	1.9E-03
Kr-88	3.4E+00	Sr-90	1.2E-04
Xe-131m	4.2E+00	Sr-91	1.3E-03
Xe-133m	4.2E+00	Sr-92	7.1E-04
Xe-133	3.2E+02	Y-90	2.8E-05
Xe-135m	7.7E-01	Y-91m	6.6E-04
Xe-135	1.0E+01	Y-91	3.0E-04
Xe-137	1.9E-01	Y-92	5.6E-04
Xe-138	6.8E-01	Y-93	2.4E-04
Br-82	8.7E-03	Zr-95	3.7E-04
Br-83	7.9E-02	Nb-95	3.7E-04
Br-84	4.2E-02	Mo-99	4.5E-01
I-130	6.3E-02	Mo-101	2.0E-02
I-131	1.6E+00	Tc-99m	1.8E-01
I-132	8.6E-01	Ru-103	3.1E-04
I-133	2.8E+00	Ru-106	1.1E-04
I-134	5.9E-01	Ag-110m	9.8E-07
I-135	1.8E+00	Te-125m	4.4E-04
Cs-132	8.4E-04	Te-127m	1.7E-03
Cs-134	7.7E-01	Te-129m	5.9E-03
Cs-135m	9.0E-03	Te-129	7.4E-03
Cs-136	2.0E-01	Te-131m	1.6E-02
Cs-137	4.4E-01	Te-131	8.5E-03
Cs-138	1.0E+00	Te-132	1.7E-01
Na-24	3.9E-02	Te-133m	1.6E-02
Cr-51	3.8E-03	Te-134	2.9E-02
Mn-54	2.6E-03	Ba-140	2.3E-03
Mn-56	1.3E-01	La-140	6.0E-04
Fe-55	2.5E-03	Ce-141	3.6E-04
Fe-59	4.4E-04	Ce-143	3.0E-04
Co-58	6.1E-03	Ce-144	2.7E-04
Co-60	8.9E-04	Pr-144	2.7E-04
Zn-65	7.3E-04	Pm-147	3.0E-05
-	-	Eu-154	2.8E-06

Table 11.1-3 Tritium Source

Release to the Coolant (Ci/yr)	
Tritium Source	Design Basis
Total H-3	3,600

Table 11.1-4 Parameters Used to Calculate Secondary Coolant Activity

Total primary-to-secondary leakage (gpd)	150
Secondary coolant mass in SG (lb/SG)	1.35E+05
Total main steam flow rate (lb/hr)	2.02E+07
Total SG blowdown flow rate (lb/hr)	1.554E+05
Decontamination factor of steam generator blowdown demineralizer:	
Br and I isotopes	100
Cs and Rb isotopes	100
Other isotopes	1,000
Decontamination factor of condensate polishing system:	
Br and I isotopes	10
Cs and Rb isotopes	2
Other isotopes	10
Partition factor	
Br and I isotopes	1.0E-02
Cs and Rb isotopes	5.0E-03
Other isotopes	5.0E-03
Fraction of feedwater through the condensate polishing system	0
Secondary coolant letdown flow rate(lb/hr)	0

Table 11.1-5 Design Basis SG Secondary Side Water Activity

Nuclide	Activity (μCi/g)	Nuclide	Activity (μCi/g)
Kr-83m	0.0	Rb-86	1.8E-06
Kr-85m	0.0	Rb-88	1.1E-04
Kr-85	0.0	Rb-89	2.3E-06
Kr-87	0.0	Sr-89	4.6E-07
Kr-88	0.0	Sr-90	3.0E-08
Xe-131m	0.0	Sr-91	2.4E-07
Xe-133m	0.0	Sr-92	9.0E-08
Xe-133	0.0	Y-90	7.6E-09
Xe-135m	0.0	Y-91m	1.5E-07
Xe-135	0.0	Y-91	7.2E-08
Xe-137	0.0	Y-92	1.2E-07
Xe-138	0.0	Y-93	4.7E-08
Br-82	2.0E-06	Zr-95	8.8E-08
Br-83	9.4E-06	Nb-95	8.9E-08
Br-84	1.8E-06	Mo-99	1.0E-04
I-130	1.5E-05	Mo-101	4.3E-07
I-131	3.8E-04	Tc-99m	5.7E-05
I-132	1.2E-04	Ru-103	7.3E-08
I-133	6.0E-04	Ru-106	2.6E-08
I-134	3.9E-05	Ag-110m	2.3E-10
I-135	3.2E-04	Te-125m	1.0E-07
Cs-132	2.0E-07	Te-127m	4.1E-07
Cs-134	1.9E-04	Te-129m	1.4E-06
Cs-135m	5.8E-07	Te-129	5.8E-07
Cs-136	4.9E-05	Te-131m	3.5E-06
Cs-137	1.1E-04	Te-131	3.0E-07
Cs-138	2.1E-05	Te-132	4.0E-05
Na-24	8.0E-06	Te-133m	1.1E-06
Cr-51	9.1E-07	Te-134	1.6E-06
Mn-54	6.2E-07	Ba-140	5.5E-07
Mn-56	1.6E-05	La-140	1.7E-07
Fe-55	6.0E-07	Ce-141	8.5E-08
Fe-59	1.1E-07	Ce-143	6.7E-08
Co-58	1.5E-06	Ce-144	6.5E-08
Co-60	2.1E-07	Pr-144	6.5E-08
Zn-65	1.7E-07	Pm-147	7.2E-09
-	-	Eu-154	6.7E-10

Table 11.1-6 Design Basis SG Secondary Side Steam Activity

Nuclide	Activity (μCi/g)	Nuclide	Activity (μCi/g)
Kr-83m	3.4E-06	Rb-86	3.6E-08
Kr-85m	1.3E-05	Rb-88	2.5E-05
Kr-85	6.9E-04	Rb-89	4.5E-08
Kr-87	8.6E-06	Sr-89	9.2E-09
Kr-88	2.5E-05	Sr-90	5.9E-10
Xe-131m	3.1E-05	Sr-91	4.9E-09
Xe-133m	3.1E-05	Sr-92	1.8E-09
Xe-133	2.3E-03	Y-90	1.5E-10
Xe-135m	5.7E-06	Y-91m	2.9E-09
Xe-135	7.6E-05	Y-91	1.4E-09
Xe-137	1.4E-06	Y-92	2.3E-09
Xe-138	5.0E-06	Y-93	9.4E-10
Br-82	7.8E-08	Zr-95	1.8E-09
Br-83	3.8E-07	Nb-95	1.8E-09
Br-84	7.3E-08	Mo-99	2.1E-06
I-130	6.1E-07	Mo-101	8.7E-09
I-131	1.5E-05	Tc-99m	1.1E-06
I-132	4.9E-06	Ru-103	1.5E-09
I-133	2.4E-05	Ru-106	5.1E-10
I-134	1.6E-06	Ag-110m	4.7E-12
I-135	1.3E-05	Te-125m	2.1E-09
Cs-132	4.0E-09	Te-127m	8.3E-09
Cs-134	3.7E-06	Te-129m	2.8E-08
Cs-135m	1.2E-08	Te-129	1.2E-08
Cs-136	9.7E-07	Te-131m	6.9E-08
Cs-137	2.1E-06	Te-131	6.0E-09
Cs-138	5.0E-06	Te-132	7.9E-07
Na-24	1.6E-07	Te-133m	2.2E-08
Cr-51	1.8E-08	Te-134	3.2E-08
Mn-54	1.2E-08	Ba-140	1.1E-08
Mn-56	3.2E-07	La-140	3.4E-09
Fe-55	1.2E-08	Ce-141	1.7E-09
Fe-59	2.1E-09	Ce-143	1.3E-09
Co-58	2.9E-08	Ce-144	1.3E-09
Co-60	4.3E-09	Pr-144	1.3E-09
Zn-65	3.5E-09	Pm-147	1.4E-10
-	-	Eu-154	1.3E-11

Table 11.1-7 Adjustment Factors (ANSI/ANS 18.1-1999 Table 11)

Element Class	Adjustment Factors		
	Reactor Water	Secondary Coolamt	
		Water	Steam
1	$\frac{P \cdot WP_n \cdot (R_{n1}+\lambda)}{W \cdot P_n \cdot (R_1+\lambda)}$	a	$\frac{FS_n}{FS} \cdot f_1$
2	$\frac{P \cdot WP_n \cdot (R_{n2}+\lambda)}{W \cdot P_n \cdot (R_2+\lambda)}$	$\frac{WS_n \cdot (r_{n2}+\lambda)}{WS \cdot (r_2+\lambda)} \cdot f_2$	$\frac{WS_n \cdot (r_{n2}+\lambda)}{WS \cdot (r_2+\lambda)} \cdot f_2$
3	$\frac{P \cdot WP_n \cdot (R_{n3}+\lambda)}{W \cdot P_n \cdot (R_3+\lambda)}$	$\frac{WS_n \cdot (r_{n3}+\lambda)}{WS \cdot (r_3+\lambda)} \cdot f_3$	$\frac{WS_n \cdot (r_{n3}+\lambda)}{WS \cdot (r_3+\lambda)} \cdot f_3$
4	1.0	$\frac{WS_n}{WS}$	$\frac{WS_n}{WS}$
5	b	b	b
6	$\frac{P \cdot WP_n \cdot (R_{n6}+\lambda)}{W \cdot P_n \cdot (R_6+\lambda)}$	$\frac{WS_n \cdot (r_{n6}+\lambda)}{WS \cdot (r_6+\lambda)} \cdot f_6$	$\frac{WS_n \cdot (r_{n6}+\lambda)}{WS \cdot (r_6+\lambda)} \cdot f_6$
6(Zn-65)[c]	10	10	10
6(Co-58)[d]	10	10	10

Where:

P_n : nominal thermal power

P : thermal power

WP_n : nominal weight of water in reactor coolant system

W : weight of water in reactor coolant system

WS_n : nominal weight of secondary side water in all steam generators

WS : weight of secondary side water in all steam generators

FS_n : nominal steam flow rate

FS : steam flow rate

λ : the radionuclide decay constant

R_{ni} : nominal removal rate for element class i (ANSI/ANS-18.1 Table 9)

R_i : removal rate for element class i calculated from in Note of ANSI/ANS-18.1 Table 9

r_{ni} : nominal removal rate for element class i (ANSI/ANS-18.1 Table 9)

r_i : removal rate for element class i shall be calculated by equation in Note of ANSI/ANS-18.1 Table 9

f_i : reactor water adjustment factor used in the secondary coolant adjustment factor.

Notes:

a. Noble gases are rapidly transported out of the water in the steam generator and swept out of the vessel in the steam. Therefore, the concentration in the water is negligible and the concentration in the steam is approximately equal to the release rate to the steam generator divided by the steam flow rate. These noble gases are removed from the system at the main condenser.

b. The concentration of H-3 is a function of the inventory of tritiated liquids in the plant, the rate of production of H-3 due to activation in the reactor coolant, the rate of release from the fuel, and the extent to which tritiated water is recycled or discharged from the plant. The H-3 concentration given in Tables 6 and 7(ANSI/ANS-18.1-1999) is representative of PWRs with a moderate amount of H-3 recycle.

c. Adjustment factors are for zinc addition plants using natural zinc. Use of depleted zinc would result in a lower adjustment factor and the decrease is a function of the reduction of Zn-64.

d. Adjustment factors are for zinc addition plants using natural or depleted zinc.

Table 11.1-8 Parameters Used to Describe Realistic Sources

Parameter	Units	US-APWR Value	Nominal Value (1)
Core thermal power	MWt	4,451	3,400
Total main steam flow rate	lb/hr	2.02E+07	1.5E+07
Reactor coolant mass	lb	6.46E+05	5.5E+05
Secondary coolant mass in all SGs	lb	5.4E+05	4.5E+05
Reactor coolant letdown flow rate	lb/hr	9.0E+04	3.7E+04
Reactor coolant letdown flow rate (yearly average for boron control)	lb/hr	1.0E+03	5.0E+02
Total SG blowdown flow rate	lb/hr	1.55E+05	7.5E+04
Fraction of radioactivity in blowdown stream which is not returned to the secondary coolant system	-	0.99 (Halogens) 0.99 (Rb, Cs) 0.999 (Miscellaneous nuclides)	1.0
CVCS cation demineralizer flow rate	lb/hr	3.5E+03	3.7E+03
Ratio of condensate demineralizer flow rate to the total steam flow rate	-	0.0	0.0
Fraction of the noble gas activity in the letdown stream not returned to the reactor coolant system	-	0.0	0.0
Primary-to-secondary leakage	lb/day	75	75

Notes:

1. Values for typical plant specified in ANSI/ANS-18.1-1999.

Table 11.1-9 Realistic Source Terms[a] (Sheet 1 of 2)

Noble Gases		
Nuclide	**Reactor Coolant Activity (μCi/g)**	**SG Steam Activity (μCi/g)**
Kr-85m	1.8E-02	2.8E-09
Kr-85	2.8E-01	4.3E-08
Kr-87	1.9E-02	8.3E-09
Kr-88	2.0E-02	3.1E-09
Xe-131m	6.8E-01	1.0E-07
Xe-133m	7.4E-02	1.2E-08
Xe-133	2.9E-02	4.5E-09
Xe-135m	1.4E-01	2.2E-08
Xe-135	7.4E-02	1.1E-08
Xe-137	3.8E-02	5.9E-08
Xe-138	6.8E-02	1.1E-08

Halogens			
Nuclide	**Reactor Coolant Activity (μCi/g)**	**SG Water Activity (μCi/g)**	**SG Steam Activity (1) (μCi/g)**
Br-84 (2)	-	-	-
I-131	1.1E-03	2.3E-08	2.3E-10
I-132	5.6E-02	5.6E-07	5.6E-09
I-133	1.7E-02	3.1E-07	3.1E-09
I-134	1.0E-01	5.5E-07	5.5E-09
I-135	4.3E-02	6.5E-07	6.5E-09

Notes:
1. These values are calculated using the equation:
   SG Steam Activity = SG Water Activity x Partition Factor (see ANSI/ANS-18.1-1999 Table 9)
2. Because this nuclide's release is less than 1.0E-05 Ci/yr, these activities are not output by the PWR-GALE Code

Rubidium, Cesium			
Nuclide	**Reactor Coolant Activity (μCi/g)**	**SG Water Activity (μCi/g)**	**SG Steam Activity (μCi/g)**
Rb-88	2.1E-01	4.6E-07	2.3E-09
Cs-134	2.1E-05	4.2E-10	2.1E-12
Cs-136	5.1E-04	1.0E-08	5.2E-11
Cs-137, Ba-137m (1)	3.0E-05	6.2E-10	3.1E-12

Notes:
1. These nuclides are in secular equilibrium.
a. SG Water and Steam Activities are based on a primary-to-secondary leakage rate of 75 lb/day and resulting secondary coolant activity as described in ANSI/ANS-18.1-1999.

Table 11.1-9 Realistic Source Terms[a] (Sheet 2 of 2)

Tritium			
Nuclide	Reactor Coolant Activity (μCi/g)	SG Water Activity (μCi/g)	SG Steam Activity (μCi/g)
H-3	1	1.0E-03	1.0E-03

Miscellaneous Nuclides			
Nuclide	Reactor Coolant Activity (μCi/g)	SG Water Activity (μCi/g)	SG Steam Activity (μCi/g)
Na-24	3.2E-02	5.5E-07	2.8E-09
Cr-51	1.7E-03	3.5E-08	1.7E-10
Mn-54	8.6E-04	1.7E-08	8.6E-11
Fe-55	6.5E-04	1.3E-08	6.5E-11
Fe-59	1.6E-04	3.2E-09	1.6E-11
Co-58	2.5E-03	5.1E-08	2.5E-10
Co-60	2.9E-04	5.8E-09	2.9E-11
Zn-65	2.7E-04	5.6E-09	2.8E-11
Sr-89	7.6E-05	1.5E-09	7.6E-12
Sr-90	6.5E-06	1.3E-10	6.5E-13
Sr-91	7.1E-04	1.2E-08	5.8E-11
Y-91m	4.8E-04	2.5E-09	1.2E-11
Y-91	2.8E-06	5.6E-11	2.8E-13
Y-93	3.1E-03	4.9E-08	2.4E-11
Zr-95	2.1E-04	4.3E-09	2.1E-11
Nb-95	1.5E-04	2.9E-09	1.5E-11
Mo-99	3.7E-03	7.3E-08	3.6E-10
Tc-99m	3.8E-03	5.2E-08	2.6E-10
Ru-103	4.1E-03	8.3E-08	4.1E-10
Ru-106	4.8E-02	9.8E-07	4.9E-09
Ag-110m	7.0E-04	1.4E-08	7.1E-11
Te-129m	1.0E-04	2.1E-09	1.0E-11
Te-129	2.4E-02	1.6E-07	8.0E-10
Te-131m	9.3E-04	1.7E-08	8.7E-11
Te-131	8.2E-03	2.4E-08	1.2E-10
Te-132	9.7E-04	1.9E-08	9.5E-11
Ba-140	7.1E-03	1.4E-07	7.1E-10
La-140	1.5E-02	2.9E-07	1.4E-09
Ce-141	8.1E-05	1.6E-09	8.2E-12
Ce-143	1.7E-03	3.2E-08	1.6E-10
Ce-144	2.2E-03	4.2E-08	2.1E-10
W-187	1.6E-03	2.9E-08	1.5E-10
Np-239	1.3E-03	2.5E-08	1.2E-10

Note:
a. SG Water and Steam Activities are based on a primary-to-secondary leakage rate of 75 lb/day and resulting secondary coolant activity as described in ANSI/ANS-18.1-1999.

11.2 Liquid Waste Management System

The liquid waste management system (LWMS) is designed to safely monitor, control, collect, process, handle, store, and dispose of liquid radioactive waste generated as a result of normal operation, including AOOs based on the provisions of RG 1.143 (Ref. 11.2-3), and NUREG-0017 (Ref. 11.2-13). The LWMS is broadly classified into the liquid waste processing system and the reactor coolant drainage system. The LWMS includes the following:

- The equipment and floor drainage processing subsystem
- The detergent drainage subsystem
- The chemical drainage subsystem
- The reactor coolant drainage subsystem

11.2.1 Design Bases

11.2.1.1 Design Objectives

The design objectives of the LWMS are as follows:

- Provide the capability to segregate the collection of equipment drainage and floor drainage
- Provide the capability to treat the liquid waste to acceptable recycle specifications for plant use
- Provide the capability to treat liquid waste to the acceptable release specifications
- Provide the capability to store, sample, and analyze treated liquid
- Provide the capability to safely control and dispose of treated liquid
- Provide the capability to stage reactor coolant drainage

The LWMS is designed for individual unit operation and no subsystems or components of the LWMS are shared.

11.2.1.2 Design Criteria

In order to meet the above objectives, the following specific criteria are satisfied:

- The LWMS has sufficient capacity, redundancy, and flexibility (see Table 11.2-19) to process incoming waste streams to meet the concentration limits of Title 10, Code of Federal Regulations (CFR), Part 20 (Ref. 11.2-1) during periods of equipment downtime and during operation at design basis fission product leakage levels (i.e., leakage from fuel producing 1% of the reactor thermal power level). The processing capabilities are such that the operation of the plant will not be impaired under these conditions.

- The LWMS is designed so that no potentially radioactive liquids can be discharged to the environment unless they have first been monitored and confirmed to be within acceptable limits. Offsite radiation doses measured on an annual basis will be within the limits of 10 CFR 20 (Ref. 11.2-1) and 10 CFR 50, Appendix I (Ref. 11.2-2).

- The LWMS has cross-connections, adequate storage capabilities and the ability to connect to and return from mobile systems to accommodate anticipated waste surge volumes.

- Interconnections between the LWMS and other plant systems are designed so that contamination of non-radioactive systems are precluded and the potential for uncontrolled and unmonitored releases of radiation to the environment from a single failure are minimized. This feature meets the requirements of IE bulletin 80-10 (Ref. 11.2-25).

- Design features minimize maintenance, equipment downtime, and leakage of radioactive liquid into the building atmosphere. Table 11.2-1 details the equipment codes for design and construction as required in Table 1 of RG 1.143 (Ref. 11.2-3). The Equipment Class 6 components are designed in compliance with applicable codes and standards, and guidelines provided in RG 1.143 (Ref. 11.2-3).

- The waste collection and monitor tanks are provided with an overflow connection at least as large as the inlet. The location of the overflow is above the high-level alarm setpoint. Each cell housing these tanks is coated with an impermeable epoxy liner (coating), up to the cubicle wall height equivalent to the full tank volume, to facilitate decontamination of the facility in the event of tank leakage and failure. This design feature, in conjunction with early leak detection, drainage and transfer capabilities, serves to minimize the release of the radioactive liquid to the groundwater and environment in accordance with the BTP 11-6 (Ref.11.2-17) and 10 CFR 20.1406 (Ref.11.2-7).

- The LWMS tanks are provided with a vent piping connected to the heating, ventilation, and air conditioning (HVAC) system. (See Chapter 9, Section 9.4) with the exception of the containment vessel reactor coolant drain tank (CVDT), which is routed to the vent header in the gaseous waste management system (GWMS).

- The LWMS is designed in compliance with the as low as reasonable achievable (ALARA) principle for occupational doses. Sufficient shielding is provided for all equipment located in the radiological controlled area (RCA) that could cause unacceptable radiation doses.

- The LWMS is capable of controlling releases of radioactive material within the numerical design objectives of 10 CFR 50, Appendix I (Ref. 11.2-2).

- The LWMS is designed to meet the requirements of 10 CFR 50, Appendix A (Ref. 11.2-4) Criteria 60, 61, and 64 and the guidance of RG 1.143, (Ref. 11.2-3)

so that waste can be successfully processed even during natural phenomena events and external man-induced hazard events.

- The LWMS is designed to process liquid waste generated from normal operation. Radwaste systems normally utilize treated effluent for operations such as sluicing and line flushing to minimize effluent discharge. In the event that there is excess water, or that the treated effluent does not meet recycled water quality specifications, the water is discharged after sampling and analysis confirms the concentration limits of 10 CFR 20 (Ref. 11.2-1). The release is controlled in accordance with 10 CFR 50.34a (Ref. 11.2-5).

- The LWMS is subjected to the design objectives of RG 4.21, “Minimization of Contamination and Radioactive Waste Generation: Life-Cycle Planning” as it contains radioactive liquid from the plant. A discussion of the design objectives and operational programs to address these radiological aspects of the system is contained in DCD Section 12.3.1. System and component design features addressing RG 4.21 (Ref. 11.2-26) are summarized in Table 12.3-8.

- The quality assurance program (QAP) is designed so that the equipment and the installation of the equipment are in accordance with the codes and standards in Table 1 of RG 1.143 (Ref. 11.2-3). The QAP is designed in accordance with ANSI/ANS 55.6 (Ref. 11.2-6).

- The LWMS is designed to operate continuously during normal operating condition and AOOs. For equipment sizing and process capability determination, the LWMS is designed to process the maximum design basis input in one week, assuming 40 hours work week, or processing one tank of liquid waste in one operating shift, whichever is controlling. When excessive wastes are accumulated during normal operation, an additional processing operation can be planned by plant personnel to support overall plant operation.

- The plant is designed in accordance with applicable codes. The QAP assures that the plant is built, maintained, and operated in accordance with the government codes and regulations. This demonstrates that 10 CFR 20.1406 (Ref. 11.2-7) is being implemented.

11.2.1.3 Other Design Considerations

In addition to the listed design criteria, the following considerations are satisfied:

- The LWMS performs no function related to the safe shutdown of the plant. The system’s failure does not adversely affect any safety-related system or component. Therefore, the LWMS is not safety-related and performs no safety functions.

- The reactor coolant drainage system is inside the containment and performs no operations relating to the safe shutdown of the plant. However, the containment isolation valves associated with the discharge line from the tank perform a safety function which is discussed in Chapter 6, Section 6.2.

- Pre-operational tests for the LWMS are discussed in Chapter 14, Section 14.2. Thereafter, subsystems and individual components are tested as needed.

- The seismic design criteria and quality group classification applicable to the design of the LWMS are discussed in Chapter 3, Section 3.2. Additionally, the LWMS design is in compliance with ANSI/ANS-55.6 (Ref. 11.2-6).

- In accordance with ANSI/ANS-55.6 (Ref. 11.2-6), the portions of the auxiliary building (A/B) that house the principal LWMS equipment are designed to contain the liquid inventory in the event of an operating-basis earthquake (OBE).

11.2.1.4 Method of Treatment

The LWMS provides for the segregated collection of floor drainage and equipment drainage, and permanently installed process equipment to treat the influent and allow sampling of the system contents. Analysis of the sample is then used to determine treatment requirements and product specifications. The process equipment includes the use of filtration systems to remove suspended solids, activated charcoal to remove organic contaminants, and ion exchange resin to remove dissolved solids and nuclides. Waste monitor tanks are provided with sample ports and with mixing nozzles inside the tank to allow thorough mixing of representative samples. Analysis of samples is used to determine if the treated waste meets the recycle and/or release limits.

Detergent wastes from showers and drainage are unlikely to have high concentrations of nuclides. The liquid is collected, filtered, and released through a monitored pathway. In the unlikely event that the contamination is above a setpoint, the liquid waste is diverted to the waste holdup tank (WHT) for additional processing.

Equipment used for the LWMS is commonly used in other nuclear power plants. The performances and capabilities of equipment, such as cartridge filters, activated charcoal, and ion exchange resin, are well-proven and documented by the manufacturers. Continued equipment improvements are being made by the vendors based on industry experience, superior technology, and better understanding of the processes. Hence, the LWMS has the capability to provide treatment and control releases within the numerical design objectives of 10 CFR 50, Appendix I (Ref. 11.2-2) and the effluent concentration limits of 10 CFR 20, Appendix B (Ref. 11.2-8).

Equipment is selected based on proven performance and quality requirements to minimize maintenance and downtime. Components expected to require inspections (i.e., tanks) are located in cubicles with access doors to allow quick ingress and egress. Components that may require maintenance (i.e., pumps) are located in low radiation corridors outside the equipment cubicles to maintain personnel doses ALARA.

Filters, the activated carbon filter, and ion exchange columns are designed with remote handling capabilities such that contact maintenance is not required. Component connections are butt welded to minimize leakage. Tanks are equipped with high-level alarms which either shut off the feed pumps or alert operators to re-direct the flow to other storage tanks to minimize the potential for overflow. In addition, cubicles that contain significant quantities of radioactive material are coated with an impermeable epoxy liner (coating), up to the cubicle wall height equivalent to the full tank volume, to facilitate decontamination of the facility in the event of tank leakage and failure. This design

feature, in conjunction with early leak detection, drainage and transfer capabilities, serves to minimize the release of the radioactive liquid to the groundwater and environment in accordance with BTP 11-6 (Ref.11.2-17) and 10 CFR 20.1406 (Ref.11.2-7). As an additional precaution, the COL Applicant is also required to provide an environment monitoring system (Section 11.5.5). Overflow from tanks or standpipe is directed to a near-by sump. The sump has liquid level detection. At high liquid levels, the level switch automatically activates the sump pump to forward the liquid to the WHT for processing. This design minimizes the potential for contamination of the facility and the environment, facilitates decommissioning, and minimizes the generation of radioactive waste.

Table 11.2-21 contains typical service level II concrete systems such as coating types, dry film thicknesses (DFT), and specific permeabilities for the three typical epoxy coatings. This table provides typical Service level II concrete epoxy coatings, but approved equivalent Service level II concrete epoxy coatings can be utilized as a liner.

Chemical wastes are collected and pH adjusted. The waste is neutralized prior to being pumped to waste holdup tanks for further processing or transferred to a container for disposal. Figure 11.2-1 provides flexibility to process chemical effluent either way.

The CVDT provides storage of reactor coolant pump (RCP) seal leakages, letdown water, inside containment valve leakages, and accumulator (ACC) drainage. The liquid collected is normally sent to the chemical and volume control system (CVCS) for processing. Nitrogen gas is used as a blanket in the tank to exclude oxygen and air.

The demineralizers are procured with a certain capability to remove ionic species and impurities to meet requirements in NRC Regulations 10 CFR Part 20, Appendix B and 10 CFR Part 50, Appendix I, to ensure that the effluent releases do not exceed regulatory limits (Table 11.2-7). Thus, an inspection of the amount of filtration and demineralizer media will be conducted to verify that the loading meets the vendor recommended loading for the demineralizer capabilities as specified in the vendor material, such as a vendor manual, for the equipment.

Replacement filters, charcoal, and resins will be purchased to meet performance standards which support overall system decontamination factors listed in Table 11.2-7.

11.2.1.5 Site-Specific Cost-Benefit Analysis

The LWMS is designed for use at any site. The design is flexible so that site-specific requirements such as preference of technologies, the degree of automated operation, and radioactive liquid waste storage can be incorporated with minor modifications to the design.

RG1.110(Ref. 11.2-21) outlines compliance with 10 CFR 50, Appendix I (Ref. 11.2-2) numerical guidelines for offsite radiation doses as a result of radioactive liquid effluents during normal operations, including AOOs. The cost-benefit numerical analysis as required by 10 CFR 50, Appendix I, Section II, Paragraph D (Ref. 11.2-2) demonstrates that the addition of items of reasonably demonstrated technology will not provide a more favorable cost benefit.

The COL Applicant is to perform a site-specific cost-benefit analysis to demonstrate compliance with the regulatory requirements

11.2.1.6 Mobile or Temporary Equipment

The LWMS is designed with permanently installed equipment (i.e., tanks, filters, activated carbon filter, ion exchange columns, and pumps). The LWMS does not include the use of mobile or temporary equipment. However, a space is provided inside the A/B to accommodate future installation of mobile or temporary equipment. Process and utility piping and electrical connections are provided to forward liquid waste to future mobile system or temporary equipment, at the discretion of the facility operation. Treated liquid can be returned to the waste monitor tanks for sampling, recycling, and/or release. The COL Applicant is responsible for ensuring that mobile and temporary liquid radwaste processing equipment and its interconnection to plant systems conforms to regulatory requirements and guidance such as 10 CFR 50.34a(Ref.11.2-5),10 CFR 20.1406(Ref.11.2-7) and RG1.143(Ref.11.2-3).

Identification of mobile/portable LWMS connections that are considered non-radioactive but later may become radioactive through contact or contamination with radioactive systems and preparation of operating procedures for these mobile/portable LWMS connections, so that the guidance and information in Inspection and Enforcement (IE) Bulletin 80-10 (Ref. 11.2-25) is followed are the responsibility of the COL Applicant.

11.2.2 System Description

The boundary of the liquid waste processing system starts at the interface valves for each of the input streams potentially containing radioactive material from other plant systems as indicated in Figure11.2-1. For many of these streams, the boundary of the LWMS starts at the respective building sump tank discharge line. The boundary of the liquid waste processing system ends at the isolation valve of the discharge lines to a tank or the discharge header.

The liquid waste processing system equipment drainage and floor drainage processing subsystem consists of four WHTs, two waste holdup tank pumps, two liquid filters, an activated carbon filter, four ion exchange columns, two waste monitor tanks, and two waste monitor tank pumps to collect treated fluid for analysis. A process flow diagram is presented in Figure 11.2-1(Sheet 1 of 3). The WHTs and waste monitor tanks and their associated pumps are located in the A/B. The filters and ion exchange columns are located at an elevation of 3’-7” in the A/B. Layout drawings of the A/B are presented in Figures 11.5-2a through k.

For the purpose of this Design Control Document (DCD), process flow diagrams with process equipment, flow data, tank batch capabilities, and key control instrumentation are provided to indicate process design, method of operation, and release monitoring. Piping and instrumentation diagrams (P&IDs) are to be included in the combined license application (COLA) after the preferred process control and operating methods are established.

The four WHTs are divided into two sets: two are designed to collect high-quality liquid from equipment drainage and the other two are designated to collect liquid from floor drainage. A common header with an isolation valve is provided to segregate the collection from equipment drainage and floor drainage, however the WHTs can be used interchangeably in the event that excess equipment drainage and/or excess floor drainage waste is generated in anticipated operations.

Two filters are connected in parallel to provide redundancy. Normally, one filter is used while the other one is on standby or being maintained.

The carbon filter is sized to handle the entire effluent inventory. It is used to remove organics which could foul the ion exchange columns. The carbon filter is designed to operate occasionally and only when there is a high level of organic contaminants. It is expected that the carbon filter medium will not need to be replaced frequently. However, in case of severe fouling, the carbon can be replaced in a similar manner as the spent resin.

Four ion exchange columns are provided to operate in separate trains: two columns in series each with mixed resins for optimum performance. During normal operation, including AOOs, only one of the two trains of columns is required to operate, while the other set is on standby. When high nuclide concentration is detected, such as during operation at design-basis failed fuel level, the four columns can be arranged to operate in series so that the treated liquid meets recycle and/or release specifications.

Two waste monitor tanks are provided, while one is in the receiving mode, the other waste monitor tank can be standing by, in sampling and analysis, or in transferring release mode.

Two waste holdup tank pumps and two waste monitor tank pumps are provided for processing and transfer operations. Normally only one of each is required for recirculation and processing and transferring.

The detergent waste processing subsystem consists of one detergent drain tank, one detergent drain tank pump, one filter, one detergent drain monitor tank, and one detergent drain monitor tank pump. A process flow diagram for this subsystem is presented in Figure 11.2-1(Sheet 2 of 3).

The detergent drain and monitor tanks and their associated pumps are located at an elevation of -26’-4” in the A/B.

The chemical drainage subsystem consists of a chemical drain tank with pH adjustment, waste analysis features, and a chemical drain tank pump. A process flow diagram for this subsystem is presented in Figure 11.2-1(Sheet 2 of 3). The chemical drain tank and pump are located at an elevation of -26’-4”. in the A/B.

Inputs to the liquid waste processing system include the following:

- Equipment drainage (major contributor)
- Floor drainage (major contributor)
- Detergent drainage (minor contributor)
- Chemical drainage (minor contributor)

See Chapter 9, Section 9.3 for a more detailed discussion of the drainage systems.

Table 11.2-2 contains specific inputs for the LWMS. These inputs are taken from ANSI/ ANS 55.6, Table 7 (Ref. 11.2-6).

The reactor coolant drainage system consists of the CVDT and two containment vessel reactor coolant drain pumps. The process flow diagram for this subsystem is presented in Figure 11.2-1(Sheet 3 of 3). CVDT and containment vessel reactor coolant drain pumps are located inside the containment. (Figure 11.5-2e and 11.5-2c).

Major inputs to the reactor coolant drainage system are as follows:

- RCPs seal leakage
- Excess letdown water
- Leakage from reactor vessel flanges
- Reactor coolant loop (RCL) drainage
- Leakage from valves inside the containment
- RCS vent drainage
- ACC drainage
- Pressurizer relief tank drainage

LWMS component data are identified in Table 11.2-3 through Table 11.2-6 and Table 11.2-20. Component American Society of Mechanical Engineers (ASME) Code, seismic design, and quality assurance requirements for the components in the LWMS are shown in Chapter 3, Table 3.2-2. The LWMS complies with the quality assurance requirements of ANSI/ANS-55.6 (Ref. 11.2-6).

The annual average release of nuclides from the plant is determined using the PWR-GALE Code. The code input parameters used are provided in Table 11.2-9. Associated projected annual releases from a single plant are provided in Table 11.2-10.

Components and structures of the mentioned systems are not under adverse vacuum conditions as there are no vacuum conditions existing due to component operations.

11.2.2.1 Liquid Waste Processing System Operation

Radioactive liquid wastes are collected in various collection tanks located within the A/B and reactor building (R/B). The wastes entering these tanks are transferred from a number of locations within the plant including the following:

- Equipment drainage
- Floor drainage and other waste sources with potentially high suspended solid content

- Detergent wastes, generally from plant sinks and showers, that contain soaps and detergent which are not compatible with ion exchange resins
- Chemical wastes (generated in very low volumes)
- SG blowdown (when radioactivity above a setpoint is detected)

The processing flow rate is selected based on the completion of sampling and processing of the volume of one tank in one shift of operation, assuming 40 hours work per week. Treated water is collected in one of two monitor tanks. When a tank is filled, the tank is isolated and the monitor tank pump is turned on to circulate the tank content for sampling and analysis to confirm that the quality of the treated water is suitable for reuse in radwaste systems (i.e., pipe flushing, sluicing, and SRST tank filling). In the event that there is a surplus of water in the plant, the water is discharged. Hence, the discharge is not a continuous process and the discharge valves are under supervisory control. Although the LWMS is designed with four WHTs, each with 24,000 gallon batch capacity expected to be the maximum volume for a day of operation during AOOs, the average daily input is lesser than this capacity as shown in Table 11.2-19. Based on the above, the sampling and analysis for the LWMS is intermittent and does not need to be a continuous process.

Radiation detection equipment and provisions for sampling features are provided at key locations. Protection against the inadvertent discharge of non-compliant waste is provided through the detection and alarm systems and by administrative controls. Design features that protect against inadvertent discharge meet Criteria 60 and 64.

Tanks, equipment, pumps, etc., used for storing and processing radioactive material are located in controlled areas and shielded in accordance with their design basis source term inventories. As a result, occupational doses comply with dose limits and are ALARA. After the waste has been processed, it is temporarily stored in monitor tanks where it is sampled prior to recycling or discharge.

The LWMS has different subsystems so that the liquid wastes from various sources can be segregated and processed separately in the most appropriate manner for each type of waste. These systems are interconnected in order to provide additional flexibility in processing the wastes and to provide redundancy.

The SG blowdown radiation monitor measures the radiation level in the SG blowdown water after it is treated and before it is returned to the condensate storage tank. A sample from the SG blowdown mixed bed demineralizers is monitored for radiation. Normally the treated SG blowdown water is not radioactive. In the event of significant primary-to-secondary system leakage due to an SG tube leak, the SG blowdown water may become contaminated with radioactive material. Detection of radiation above a predetermined setpoint automatically initiates an alarm in the main control room (MCR) for operator actions, and automatically turns off the valve through which treated liquid is sent to the discharge header. Plant personnel are required to manually sample the SG blowdown water for analysis. When it is confirmed that the liquid is contaminated, the liquid is routed to the LWMS for processing.

The LWMS is operated and monitored from the radwaste control room, although local monitors are required and installed for some equipment. The LWMS operates on a batch

basis with manual start and automatic stops. Important process parameters such as liquid levels within the tanks, processing flow rates, differential pressures across filters, ion exchange columns, etc., are indicated and/or alarmed in order to provide operational information and assess equipment performance. A radiation detector and dual isolation valves are installed on the sole discharge line to monitor and control effluents to the environment. Key system alarms, such as high-level alarms associated with the tanks, are simultaneously activated in the MCR. Table 11.2-8 summarizes the LWMS main tank instrumentation and alarms.

11.2.2.1.1 Equipment and Floor Drain Processing Subsystem

Waste processed by this subsystem is collected in any of the four WHTs. Typically, liquid from equipment drainage and liquid from floor drainage are stored in separate tanks and processed through appropriate process equipment based on the constituents of the stream. For example, an equipment drainage stream low in organics may be processed without the need to pass through the deep bed carbon filter, whereas liquid from floor drainage high in suspended solids and organics is typically processed through the deep bed carbon filter. The waste stream material collected in the WHTs is typically processed on a batch basis.

Sump tanks are likely to receive quantities of waste contaminated with oil and sludge. As a result, the sump tanks are equipped with oil separator baffles to isolate the oil/sludge and aid its transfer into a drum. This significant isolated fraction of the oil/sludge serves to minimize the potential for damage to downstream processing equipment such as ion exchange columns and extends the lifespan of the deep bed carbon filter.

After processing, the treated fluid is sampled from the monitor tanks. Depending on the sample results and demand for treated water in the radwaste systems, the treated fluid is either:

- Returned to the WHTs for further processing
- Reuse for resin sluicing application or flushing lines
- Discharged when compliant with 10 CFR 20 (Ref. 11.2-1), 10 CFR 50 (Ref. 11.2-10), and site-specific national pollution discharge elimination system permit requirements are demonstrated.

11.2.2.1.2 Reactor Coolant Drain Subsystem

The reactor coolant drainage subsystem provides staging of reactor coolant depending on the operating condition of the plant (i.e., normal operation, other anticipated operations, and maintenance/refueling operations). Each of these operating conditions is discussed below.

11.2.2.1.2.1 Normal Operation

Under normal plant operation, relatively small quantities of reactor-grade water is collected from the following locations:

- RCP Number 2 seal and Number 3 seal leakage (Note: Number 1 seal is directed to the VCT)
- Excess letdown water
- Leakage from reactor vessel flanges
- RCL drainage
- Leakage from valves inside the containment
- RCS vent drainage
- ACC drainage
- Pressurizer relief tank drainage

These liquids drain to the CVDT or to the suction of the containment vessel reactor coolant drain pump which is located inside the containment. A nitrogen cover gas is maintained over the liquid in the tank to preserve the quality of the water and to minimize the potential for the buildup of a flammable mixture. The water entering the tank can be at a relatively high temperature (up to 200 °F), therefore, the tank is equipped with instrumentation to monitor the temperature. Prior to transferring the water to the holdup tank (HT) in CVCS via one of two containment vessel reactor coolant drain pumps, the water temperature is decreased below 200 °F by the addition of PMW. The tank is generally maintained at a near constant level to minimize both the amount of gas sent to the GWMS and the amount of nitrogen cover gas required.

11.2.2.1.2.2 Other Anticipated Operations

In the event that the liquid collected in the CVDT is either oxygenated or above the specified radiation limits, it is sent to the WHTs for processing.

11.2.2.1.2.3 Maintenance/Refueling Operations

During refueling, the containment vessel reactor coolant drain pumps are used to drain water from the reactor coolant loops and the emergency core cooling system ACCs to the refueling water storage auxiliary tank (RWSAT) while the drain water from the refueling cavity is directly sent to the refueling water storage pit (RWSP) by the CS/RHR pumps or gravity. In this case, typically both pumps are used to speed up the transfer of water from these areas. In this mode, the water is transferred directly to the RWSAT without entering the CVDT. During maintenance or outages, any remaining gas is purged from the system to the GWMS using nitrogen.

Recyclable reactor-grade effluents enter this subsystem from various locations inside the containment and are collected without exposure to air (which would degrade the quality of the water). These liquids are collected in the CVDT which is situated inside the containment. The contents of the tank are maintained in a nitrogen-rich environment to minimize the potential for degradation of the water quality and minimize the potential for formation of a flammable mixture. The tank is a cylindrical stainless steel vessel and

oriented horizontally. The tank is vented to the GWMS. The tank is equipped with a relief valve, which vents to the containment sump. The purge water head tank in CVCS shares the same vapor space with the CVDT.

The liquid level and temperature within the tank are monitored. The liquid temperature is maintained below 200 °F by the addition of PMW, as necessary, in order to minimize the potential for damage to downstream equipment, including diaphragm valves. The liquid is transferred via one of two reactor coolant drainage system pumps to the CVCS HT. The liquid can also be routed to the WHT and the RWSAT depending on the quality of the water and plant conditions.

11.2.2.2 Detailed System Component Description

11.2.2.2.1 Equipment Drains and Floor Drains Processing Subsystem

The equipment drainage and floor drainage processing subsystem consist of the following:

- Four WHTs and two associated waste holdup tank pumps
- Filtration system that removes suspended solids
- Deep bed carbon filter to remove any organic material
- Ion exchange columns (also referred to as demineralizers)
- Filter/strainer to provide the removal of any resin fines and minimize the potential for accumulation in the monitor tanks
- Two waste monitor tanks and two associated waste monitor tank pumps
- Sample points
- Associated utilities

11.2.2.2.2 Tanks

The tanks are constructed from material appropriate for their intended use are listed in Table 11.2-3. A listing of codes applicable to the tanks is presented in Table 11.2-1. These codes and standards are consistent with those in RG 1.143, Table 1 (Ref. 11.2-3). The total tank capacity is sized to accommodate the expected volumes of waste generated in the upstream systems that feed into the LWMS for processing. The tanks are provided with mixing mechanisms and features that allow the removal of representative samples for the analysis of tank contents. In addition, all the tanks in the LWMS are vented to the ventilation system with the exception of the CVDT, which is routed to the GWMS.

The tanks are equipped with overflows (at least as large as the largest inlet) into the appropriate sumps. The cells/cubicles housing tanks that contain significant quantities of radioactive material are coated with epoxy to a height that is sufficient to hold the tank contents in the event of tank failure. These coating are Service Level II as defined in RG

1.54 Revision 1, and are subject to the limited QA provisions, selection, qualification, application, testing, maintenance and inspection provisions of RG 1.54 and standards reference therein, as applicable to Service Level II coatings. Post-construction initial inspection is performed by personnel qualified using ASTM D 4537 (Reference 11.2-22) using the inspection plan guidance of ASTM D 5163 (Reference 11.2-23). Level-detecting instrumentation measuring the current tank inventories is provided. High- and low-level alarms are provided. These alarms are annunciated in the radwaste control room located in the A/B and also in the MCR.

The sump tanks are equipped with two pumps and level instruments. This redundancy serves to minimize the effect of pump failure.

11.2.2.2.3 Pumps

The LWMS pumps are constructed from material appropriate for their intended use and the material is listed in Table 11.2-4. Generally, these pumps are stainless steel, horizontal centrifugal type. A listing of codes applicable to pumps is presented in Table 11.2-1.

11.2.2.2.4 Cartridge Filter

Cartridge filters are housed in enclosures that facilitate simplified change out with minimal occupational dose in compliance with the ALARA principle. These filters are located inside a shielded environment commensurate with the design basis source term. The filters efficiently remove suspended solids and radioactive particulates. Differential pressure measured across the filter provides an indication of its performance and is indicated locally in the radwaste control room. Spent filters are transferred to the solid waste management system (SWMS) for packaging and disposal.

11.2.2.2.5 Activated Carbon Filter

The carbon filter is a column holding carbon media designed to remove organic contaminants. This serves to protect the downstream ion exchange media from fouling. Differential pressure measured across the filter is indicated locally in the radwaste control room and provides an indication of the performance of the filter. Spent filter media is transferred as slurry with primary make-up water to the SWMS for further processing and packaging. A listing of applicable codes is presented in Table 11.2-1.

11.2.2.2.6 Ion Exchange Columns (Demineralizers)

The ion exchange columns are designed to remove radionuclide impurities in the liquid stream. The ion exchange resins, which consist of anion and cation resins, are selected during the detailed design phase. Differential pressure measured across the columns is indicated in the radwaste control room and provides an indication of the performance of the columns. Spent resin is transferred as slurry with primary make-up water to the SWMS. A waste effluent strainer is installed downstream of the ion exchange columns for the purpose of removing any resin fines that may be carried over from the columns. These stainless steel strainers are basket-type with 25 micron to 550 micron mesh openings. Differential pressure measured across the strainer is indicated locally and provides an indication of the performance of the strainer. A listing of applicable codes is presented in Table 11.2-1.

11.2.2.2.7 Chemical Drain Subsystem

The chemical drainage subsystem collects laboratory wastes and some of the decontamination solutions. To the greatest extent practicable, all decontamination solutions and process liquids are inherently free of hazardous materials and toxic substances. The use of these decontamination solutions and process liquids must not generate mixed waste. Additionally, laboratory wastes are collected for treatment and disposed of in appropriate portable containers. Only small amounts of laboratory wastes, basically those associated with the cleaning of glassware and similar activities, are expected to be in the chemical drainage subsystem. Any such wastes, which do not contain significant quantities of chemical constituents, may be transferred to the floor drainage processing subsystem.

Dilute acids and bases, along with heavy metals, are captured by the chemical drainage subsystem, pH adjusted, sampled, and characterized. The waste is neutralized prior to being pumped to waste holdup tanks for further processing or transferred to a container for disposal. Figure 11.2-1 provides flexibility to process chemical effluent either way.

The neutralization agent measuring tank is provided to measure and add a basic solution to the chemical drain tank and the waste holdup tanks. The tank is typically part of a neutralization package with a metering pump and associated piping. The neutralization package is designed to provide pH adjustments before water from the waste water hold up tank and chemical drain tank is processed. The component data on the neutralizing agent measuring tank is presented in Table 11.2-3.

11.2.2.2.8 Detergent Drain Subsystem

Detergent waste is collected in the detergent drain tank. This waste stream consists primarily of material from sinks, showers, emergency showers, etc. This waste stream does not typically contain any significant levels of radioactive contaminants. A detergent drain strainer is installed upstream of the detergent drain tank for the purpose of removing any materials that may be carried over from the waste streams. These stainless steel strainers are basket-type with 25 micron to 550 micron mesh openings. This waste stream is filtered and released through the discharge header.

The detergent drain tank is based on ANSI/ANS 55.6 (Ref. 11.2-6). The requirements for maximum daily input is 2,000 gallons. The tank is sized but excluding the collection of laundry waste as contaminated laundry is sent off site for cleaning and/or disposal. This tank is sufficient for anticipated operations. The equipment for this subsystem consists of the following:

- Detergent drain tank and associated detergent drain tank pump
- Filtration system
- Detergent drain monitor tank and associated detergent drain monitor tank pump
- Sample points
- Cross connection to the other liquid processing system

- Associated utilities

After processing, the waste is held in the monitor tank(s) where a sample is taken, and if discharge standards are met, the waste is discharged off site. Any waste not meeting discharge requirements is transferred to the WHT for further processing. The detergent drain subsystem is shown in Figure11.2-1(Sheet 2 of 3).

11.2.3 Radioactive Effluent Releases

11.2.3.1 Radioactive Effluent Releases and Dose Calculation in Normal Operation

The radioactive constituents of the waste stream are removed by the processing equipment such as filters, ion exchange, etc. Each processing equipment has an associated decontamination factor, which is a measure of the removal efficiency of the particular equipment. The decontamination factors are taken from NUREG-0017 Rev.1(Ref.11.2-13) and are presented in Table 11.2-7. The calculations are made based on the assumption as follows:

- The liquid effluent from the primary system is processed by the LWMS and is discharged without reuse.

- The steam generator blowdown is treated and returned to the condenser.

The release physical location and configuration of the treated effluent is site specific. Detailed design information such as release point, effluent temperature and flow rate, and size and shape of flow orifices, is to be presented in the site specific detail design. The COL Applicant is responsible for ensuring that the site-specific information of the LWMS, e.g., radioactive release points, effluent temperature, shape of flow orifices, etc., is to be provided in the COLA(COL11.2(2)).

The annual average release of radionuclides is estimated by the PWR-GALE Code (Ref.11.2-13) with the reactor coolant activities that are described in Section 11.1. The version of the code is a proprietary modified version of the NRC PWR-GALE code reflecting the design specifics of US-APWR design(Ref. 11.2-27). The parameters used by the PWR-GALE Code are provided in Table 11.2-9, and the calculated effluents are provided in Table 11.2-10. The calculated effluents for the maximum releases are provided in Table 11.2-11.

The calculated effluent concentrations using annual release rates are then compared against the concentration limits of 10 CFR 20 Appendix B (Ref. 11.2-8); see Table 11.2-12 and Table 11.2-13.

The calculation uses 12,900 gpm [[cooling tower blowdown]] as dilution water (See Chapter 10, Subsection 10.4.5). The ratios to the concentration limits of 10 CFR 20 Appendix B (Ref 11.2-8) are 8.10E-02 (with expected releases) and 3.09E-01 (with maximum defined fuel defects), and these values are less than the allowable value of 1.0.

The individual doses are evaluated with LADTAP II Code (Ref. 11.2-14). The parameters used in the LADTAP II Code are listed in Table 11.2-14, and calculated doses are listed in Table 11.2-15. Based on these parameters, the dose to total body is 1.98 mrem/yr(Child)

and the dose to organ is 2.54 mrem/yr (Child's liver). These values are less than the criteria of 3 mrem/y and 10 mrem/yr, respectively, as specified in 10 CFR 50 Appendix I (Ref. 11.2-2).

The COL Applicant is to calculate doses to members of the public following the guidance of RG 1.109 (Ref 11.2-15) and RG 1.113 using site-specific parameters, and compares the doses due to the liquid effluents with the numerical design objectives of Appendix I to 10 CFR 50 (Ref 11.2-10) and compliance with requirements of 10 CFR 20.1302, 40 CFR 190.

11.2.3.2 Radioactive Effluent Releases due to Liquid Containing Tank Failures

In case of a failure of a tank containing radioactive liquid, the radioactive concentrations in the potable water supply located in the unrestricted area are evaluated with the procedure specified in NUREG-0133 Appendix A (Ref. 11.2-16), and the results are less than the limits of 10 CFR 20 Appendix B (Ref 11.2-8).

In the evaluation, the holdup tank, the waste holdup tank and boric acid tank are selected because they contain the largest amount of radioactivity. Source term for each tank is provided in this DCD, and the COL Applicant is responsible for site-specific assessment of the liquid containing tank failure analysis [COL Item#11.2(3)] using the site-specific parameters.

The source term is calculated in accordance with Branch Technical Position (BTP) 11-6 (Ref. 11.2-17). BTP 11-6 Subsection B.2, endorses Appendix A of NUREG-0133, which describes the RATAF code for PWR plants. Accordingly, the RATAF code is utilized.

Table 11.2-16 shows input parameters for the RATAF code calculation (Ref. 11.2-27). Table 11.2-17 shows the source term calculated by the RATAF code. The concentrations of corrosion and activation products are the RATAF code output. And the concentrations of fission products are calculated by multiplying the RATAF code output by 0.12/1.0 to adjust the fuel defect level from 1% built-in the RATAF code to 0.12% recommended in BTP 11-6.

The COL Applicant is responsible for providing the site-specific hydro-geological data and analysis to demonstrate that the potential groundwater or surface water contamination concentration resulting from radioactive release due to liquid containing tank failure is less than the 10 CFR 20, Appendix B, Table 2 Effluent Concentration Limits (ECLs). This evaluation is limited to the impact of radioactive effluent releases due to tank failure. Table 11.2-18 evaluates the failure of sumps, sump pumps, and drainage equipment. Since the Table 11.2-18 equipment items contain much smaller amount of liquid waste, the release impacts due to these equipment failures are minimal and are bounded by the impact of tank failure evaluated herein.

11.2.3.3 Offsite Dose Calculation Manual

The description for offsite dose calculation manual is given in Section 11.3.3.3.

11.2.4 Testing and Inspection Requirements

Preoperational testing of the LWMS is performed to verify the proper operation of equipment and processes, and is discussed in Chapter 14, Section 14.2. Performance

testing of the LWMS is conducted to demonstrate acceptable performance of the radioactive waste processing and storage subsystems under normal operational conditions and AOOs as discussed in Chapter 14, Section 14.2. Thereafter, portions of the systems are tested as needed.

During initial testing of the system, performance of the process and utility (such as nitrogen) supply and mobile systems are tested to demonstrate conformance with design flows and process capabilities. An integrity test is performed on the system upon completion of construction.

Provisions are made for periodic inspection of major components to verify the capability and integrity of the systems. Display devices are provided to indicate vital parameters required in routine testing and inspection.

Epoxy coatings in cubicles that contain significant quantities of radioactive material, are Service Level II coatings as defined in RG 1.54 Revision 1, and are subject to the limited QA provisions, selection, qualification, application, testing, maintenance and inspection provisions of RG 1.54 and standards referenced therein, as applicable to Service Level II coatings. Post-construction initial inspection is performed by personnel qualified using ASTM D 4537 (Reference 11.2-22) using the inspection plan guidance of ASTM D 5163 (Reference 11.2-23).”

11.2.5 Combined License Information

COL 11.2(1) The COL Applicant is responsible for ensuring that mobile and temporary liquid radwaste processing equipment and its interconnection to plant systems conforms to regulatory requirements and guidance such as 10 CFR 50.34a (Ref. 11.2-5), 10 CFR 20.1406 (Ref.11.2-7) and RG 1.143 (Ref. 11.2-3), respectively.

COL 11.2(2) Site-specific information of the LWMS, e.g., radioactive release points, effluent temperature, shape of flow orifices, etc., is provided in the COLA.

COL 11.2(3) The COL Applicant is responsible for the site-specific hydrogeological data and for performing an analysis to demonstrate that the potential groundwater or surface water contamination concentration resulting from radioactive release due to liquid containing tank failure meets the 10 CFR 20, Appendix B, Table 2 ECLs.

COL 11.2(4) The COL Applicant is to calculate doses to members of the public following the guidance of RG 1.109 (Ref 11.2-15) and RG 1.113 using site-specific parameters, and compares the doses due to the liquid effluents with the numerical design objectives of Appendix I to 10 CFR 50 (Ref 11.2-10) and compliance with requirements of 10 CFR 20.1302, 40 CFR 190.

COL 11.2(5) The COL Applicant is to perform a site-specific cost benefit analysis to demonstrate compliance with the regulatory requirements.

COL 11.2(6) The COL Applicant is to provide piping and instrumentation diagrams (P&IDs).

COL 11.2(7) The COL Applicant is responsible for identifying the implementation milestones for the coatings program used in the LWMS. The coatings program addresses RG 1.54 Revision 1, recognizing that more recent standards may be used if referenced in DCD Section 11.2.

COL 11.2(8) The COL Applicant is to describe mobile/portable LWMS connections that are considered non-radioactive but later may become radioactive through contact or contamination with radioactive systems (i.e., a non-radioactive system becomes contaminated due to leakage, valving errors, or other operating conditions in the radioactive systems), and operational procedures of the mobile/portable LWMS connections. The COL Applicant is to prepare a plan to develop and use operating procedures so that the guidance and information in Inspection and Enforcement (IE) Bulletin 80-10 (Ref. 11.4-25) is followed.

11.2.6 References

11.2-1 Standards for Protection Against Radiation, NRC Regulations Title 10, Code of Federal Regulations, 10 CFR Part 20, December 2002.

11.2-2 Numerical Guides for Design Objectives and Limiting Conditions for Operation to Meet the Criterion "As Low as is Reasonably Achievable" for Radioactive Material in Light-Water-Cooled Nuclear Power Reactor Effluents, NRC Regulations Title 10, Code of Federal Regulations, 10 CFR Part 50, Appendix I .

11.2-3 Design Guidance for Radioactive Waste Management Systems, Structures, and Components Installed in Light-Water-Cooled Nuclear Power Plants, Regulatory Guide 1.143, Rev. 2, November 2001.

11.2-4 General Design Criteria for Nuclear Power Plants, NRC Regulations Title 10, Code of Federal Regulations, 10 CFR Part 50, Appendix A.

11.2-5 Design Objectives for Equipment to Control Releases of Radioactive Material in Effluents-Nuclear Power Reactors, NRC Regulations Title 10, Code of Federal Regulations, 10 CFR Part 50.34a.

11.2-6 Liquid Radioactive Waste Processing for Light Water Reactor Plants, ANSI/ANS 55.6, American National Standards Institute/American Nuclear Society, July 1993 (Reaffirmed 1999).

11.2-7 Minimization of Contamination, NRC Regulations Title 10, Code of Federal Regulations, 10 CFR Part 20.1406.

11.2-8 Annual Limits on Intake (ALIs) and Derived Air Concentrations (DACs) of Radionuclides for Occupational Exposure; Effluent Concentrations;

Concentrations for Release to Sewerage, NRC Regulations Title 10, Code of Federal Regulations, 10 CFR Part 20, Appendix B.

11.2-9 Deleted

11.2-10 Domestic Licensing of Production and Utilization Facilities, Energy. Title 10, Code of Federal Regulations, Part 50, U.S. Nuclear Regulatory Commission, Washington DC.

11.2-11 Rules for Construction of Nuclear Power Plant Components, Boiler and Pressure Vessel Code. Section III, American Society of Mechanical Engineers, Washington DC.

11.2-12 Materials, Boiler and Pressure Vessel Code. Section II, American Society of Mechanical Engineers,.

11.2-13 Calculation of Releases of Radioactive Materials in Gaseous and Liquid Effluents from Pressurized Water Reactors (PWR-GALE Code). NUREG-0017, Rev. 1, U.S. Nuclear Regulatory Commission, Washington, DC., April 1985.

11.2-14 LADTAP II Technical Reference and User Guide, NUREG/CR-4013, U.S. Nuclear Regulatory Commission, Washington, DC, April 1986.

11.2-15 Calculation of Annual Doses to Man from Routine Releases of Reactor Effluents for the Purpose of Evaluating Compliance with 10 CFR Part 50, Appendix I, Regulatory Guide 1.109, Rev. 1, U.S. Nuclear Regulatory Commission, Washington, DC, October 1977.

11.2-16 Preparation of Radiological Effluent Technical Specification for Nuclear Power Plants. NUREG-0133. U.S. Nuclear Regulatory Commission, Washington, DC., October 1978.

11.2-17 Postulated Radioactive Releases due to Liquid-Containing Tank Failures. Branch Technical Position 11-6, NUREG-0800, U.S. Nuclear Regulatory Commission, Washington DC., March 2007.

11.2-18 Estimating Aquatic Dispersion of Effluent from Accidental and Routine Releases for the Purpose of Implementing Appendix I, Regulatory Guide 1.113, Rev. 1,U.S. Nuclear Regulatory Commission, Washington DC., April 1977.

11.2-19 Compliance with Dose Limits for Individual Members of the Public Title 10, Code of Federal Regulations, 10 CFR Part 20.1302.

11.2-20 Environmental Radiation Protection Standards for Nuclear Power Operations Title 40, Code of Federal Regulations, 40 CFR Part 190.

11.2-21 Cost-Benefit Analysis for Radwaste Systems for Light-Water-Cooled Nuclear Power Reactors. Regulatory Guide 1.110, March 1976.

11.2-22 Standard Guide for Establishing Procedures to Qualify and Certify Inspection Personnel for Coating Work in Nuclear Facilities, American Society for Testing and Materials, ASTM D 4537-04a.

11.2-23 Standard Guide for Condition Assessment of Coating Service Level Coating Systems in Nuclear Power Plants, American Society for Testing and Materials, ASTM D 5163-08.

11.2-24 Nuclear Regulatory Commission, Service Level I, II, and III Protective Coatings Applied to Nuclear Power Plants, Regulatory Guide 1.54, Rev. 1, July 2000.

11.2-25 Contamination of Nonradioactive System and Resulting Potential for Unmonitored, Uncontrolled Release of Radioactivity to Environment, U.S. Nuclear Regulatory Commission, IE Bulletin No. 80-10, May 6, 1980.

11.2-26 Minimization of Contamination and Radioactive Waste Generation: Life-Cycle Planning. RG 4.21, Rev. 0, U.S. Nuclear Regulatory Commission, Washington, DC, June 2008.

11.2.27 Calculation Methodology for Radiological Consequences in Normal Operation and Tank Failure Analysis, MUAP-10019-P Rev. 1 (Proprietary) and MUAP-10019-NP Rev. 1 (Non-proprietary), March 2011.

Table 11.2-1 Equipment Codes (Extracted from Table 1, RG 1.143)

Component	Design and Construction	Materials[1]	Welding	Inspection and Testing
Pressure Vessels and Tanks (>15 psig)	ASME Code BPVC Div. 1 or Div.2	ASME Code Section II	ASME Code Section IX	ASME Code Section VIII, Div. 1 or Div.2
0-15 psig Tanks	API 620	ASME Code[3] Section II	ASME Code Section IX	API 620
Atmospheric Tanks	API 650	ASME Code[3] Section II	ASME Code Section IX	API 650
Pumps	API 610; API 674; API 675; ASME BPVC Section VIII, Div.1 or Div.2	ASTM A571-84 (1997) or ASME Code Section II	ASME Code Section IX	ASME BPVC Code[2] Section III, Class 3
Piping and Valves	ANSI/ASME B31.3[5, 6]	ASME Code Section II[7]	ASME Code Section IX	ANSI/ASME B31.3
Flexible Hoses and Hose Connections for MRWP[4]	ANSI/ANS-40.37	ANSI/ANS-40.37	ANSI/ANS-40.37	ANSI/ANS-40.37
Filters and Ion Exchange Columns	ASME Code BPVC, Section VIII, Div. 1 or Div.2	ASME Code Section II	ASME Code Section IX	ASME Code Section VIII, Div. 1 or Div.2

Notes:

1. Manufacturer's material certificates of compliance with material specifications may be provided in lieu of certified material test reports as discussed in Regulatory Position 1.1.2 of RG 1.143 (Ref. 11.2-3)

2. ASME Code stamp, material traceability, and the quality assurance criteria of ASME Boiler and Pressure Vessel Code, Section III (Ref. 11.2-11), Div.1, Article NCA are not required. Therefore, these components are not classified as ASME Code Section III, Class 3.

3. Fiberglass-reinforced plastic tanks will not be used for any equipment in the radwaste systems.

4. Flexible hoses should only be used in conjunction with mobile radwaste processing systems .

5. Class RW-IIa and RW-IIb piping systems are to be designed as category “M” systems.

6. Classes RW-IIa, RW-IIb and RW-IIc are discussed in Regulatory Position 5 of RG 1.143 (Ref. 11.2-3).

7. ASME BPVC Section II (Ref. 11.2-12) required for Pressure Retaining Components.

Table 11.2-2 Waste Liquid Inflow into the LWMS

Collection Tank and Sources	Expected Input Rate (gpd)	Activity
Holdup tanks	---	---
CVCS letdown (1)	2,875	100% of reactor coolant
RCP Seal Leakage(2)	900	10% of reactor coolant
WHTs	---	---
Reactor containment cooling	500	0.1% of reactor coolant
Leakage inside containment (to containment sump)	10	167% of reactor coolant
Leakage outside containment	80	100% of reactor coolant
Equipment drainage	250	100% of reactor coolant
Spent fuel pool liner leakage	25	0.1% of reactor coolant
Miscellaneous drainage	675	0.1% of reactor coolant
Equipment and area decontamination	40 (normal) 3,000 (shutdown)	1% of reactor coolant
Sampling drainage	200	5% of reactor coolant
Detergent Drain Tank	---	---
Hot shower	0 (normal) 400 (shutdown)	10^{-7} μ Ci/gal
Hand wash	200 (normal) 1,500 (shutdown)	10^{-7} μ Ci/gal

Note:

1. Based on average letdown for normal fuel cycle operations.

2. Based on RCP Number 2 and Number 3 seal leakage flow rate.

Table 11.2-3 Component Data – Tanks (Sheet 1 of 2)

The tank effective volumes are tank volumes, the batch volumes are approximately 80% of these values.

Tank Type	Specifications
Waste Holdup Tanks	
Number of items	4
Nominal volume (gal)	30,000
Type	Vertical, Cylindrical
Design pressure	Atmospheric
Design temperature (°F)	175
Material	Stainless Steel
Detergent Drain Tank	
Number of items	1
Nominal volume (gal)	2,500
Type	Vertical, Cylindrical
Design pressure	Atmospheric
Design temperature (°F)	175
Material	Stainless Steel
Chemical Drain Tank	
Number of items	1
Nominal volume (gal)	1,000
Type	Vertical, Cylindrical
Design pressure	Atmospheric
Design temperature (°F)	175
Material	Stainless Steel
Waste Monitor Tanks	
Number of items	2
Nominal volume (gal)	30,000
Type	Vertical, Cylindrical
Design pressure	Atmospheric
Design temperature (°F)	150
Material	Stainless Steel

Table 11.2-3 Component Data – Tanks (Sheet 2 of 2)

The tank effective volumes are tank volumes, the batch volumes are approximately 80% of these values.

Tank Type	Specifications
Detergent Drain Monitor Tank	
Number of items	1
Nominal volume (gal)	2,500
Type	Vertical, Cylindrical
Design pressure	Atmospheric
Design temperature (°F)	150
Material	Stainless Steel
C/V Reactor Coolant Drain Tank	
Number of items	1
Nominal volume (ft^3)	60
Type	Horizontal, Cylindrical
Design pressure (psig)	25 (internal) / 15 (external)
Design temperature (°F)	200
Material	Stainless Steel
A/B Sump Tank, A/B Equipment Drain Sump Tank, A-R/B Sump Tank and B-R/B Sump Tank	
Number of items	1 (each)
Nominal volume (gal)	1,200
Type	Vertical, Cylindrical
Design pressure	Atmospheric
Design temperature (°F)	150
Material	Stainless Steel
Containment Vessel Sump	
Number of items	1
Nominal volume (gal)	1,200
Design Pressure	Atmospheric
Design temperature (°F)	200
Material	Stainless Steel
Neutralizing Agent Measuring Tank	
Number of Items	1
Nominal Volume (gals)	100
Type	Vertical / Cylindrical
Design Pressure	0 (Atmosphere)
Design Temperature (°F)	50-104
Material	Stainless Steel

Table 11.2-4 Component Data – Pumps

Pump Type	Specifications
Waste Holdup Tank Pumps	
Number of pumps	2
Type	Horizontal, Centrifugal
Design pressure (psig)	200
Design temperature (°F)	175
Design flow (gpm)	200
Material	Stainless Steel
Detergent Drain Tank Pump / Detergent Drain Monitor Tank Pump	
Number of pumps	1 (each)
Type	Horizontal, Centrifugal
Design pressure (psig)	150
Design temperature (°F)	175
Design flow (gpm)	20
Material	Stainless Steel
Chemical Drain Tank Pump	
Number of pumps	1
Type	Horizontal, Centrifugal
Design pressure (psig)	150
Design temperature (°F)	175
Design flow (gpm)	20
Material	Stainless Steel
Waste Monitor Tank Pumps	
Number of pumps	2
Type	Horizontal, Centrifugal
Design pressure (psig)	150
Design temperature (°F)	150
Design flow (gpm)	200
Material	Stainless Steel
C/V Sump Pumps	
Number of pumps	2
Type	Vertical, Centrifugal
Design pressure (psig)	150
Design temperature (°F)	200
Design flow (gpm)	30
Material	Stainless Steel
C/V Reactor Coolant Drain Pumps	
Number of pumps	2
Type	Horizontal, Centrifugal
Design pressure (psig)	200
Design temperature (°F)	200
Design flow (gpm)	120
Material	Stainless Steel
Sump Tank Pumps	
Number of pumps	8 (2 for each sump tank)
Type	Horizontal, Submerging
Design pressure (psig)	150
Design temperature (°F)	150
Design flow (gpm)	50
Material	Stainless Steel

Table 11.2-5 Component Data – (Filters)

Filter Type	Specifications
Waste Effluent Inlet Filter	
Number of filters	2
Type	Cartridge
Design pressure (psig)	200
Design temperature (°F)	175
Design flow (gpm)	90
Particle size (micron)	25
Filter housing material	Stainless Steel
Detergent Drain Filter	
Number of filters	1
Type	Cartridge
Design pressure (psig)	150
Design temperature (°F)	175
Design flow (gpm)	20
Particle size (micron)	25
Filter housing material	Stainless Steel

Table 11.2-6 Component Data – (Ion Exchangers)

Ion Type	Specifications
Waste Demineralizer	
Number	4
Design pressure (psig)	200
Design temperature (°F)	175
Design flow (gpm)	90
Nominal resin volume (ft^3)	70
Column material	Stainless Steel
Resin type	Mixed cation and anion
Activated Carbon Filter	
Number of filters	1
Media	Activated Carbon
Design pressure (psig)	200
Design temperature (°F)	150
Design flow (gpm)	90
Nominal resin volume (ft^3)	70
Filter housing material	Stainless Steel

Table 11.2-7 Decontamination Factors

Resin Type or Component	Tritium	Anion	Cs/Rb	Other
Mixed bed purification system($LiBO_3$)	1	100	2	50
Evaporator condensate	1	5	1	10
Radwaste	1	100 (10)	2 (10)	100 (10)
SG Blowdown	1	100 (10)	10 (10)	100 (10)
Cation bed	1	1 (1)	10 (10)	10 (10)
Anion bed	1	100 (10)	1 (1)	1 (1)
Boron Recycle System	1	10	2	10

Note:
1. The numbers in the brackets are DFs for the second column (when used).
2. Decontamination factors (DFs) of all filters are 1.

Evaporator	Tritium	Iodine	Other
Boric acid recovery	1	100	1,000

Table 11.2-8 Summary of Tank Indication, Level Annunciations, and Overflows

Tank	Level Indication Location	Alarm	Location of Alarm	Overflows Into
WHTs	radwaste control room	High Level	Radwaste control room	A/B Sump
		Low Level	Radwaste control room	
Chemical Drain Tank	Radwaste control room	High Level	Radwaste control room	Portable container
		Low Level	Radwaste control room	
Waste Monitor Tanks	Radwaste control room	High Level	Radwaste control room	A/B Sump
		Low Level	Radwaste control room	
Detergent Drain Tank	Radwaste control room	High Level	Radwaste control room	A/B Sump
		Low Level	Radwaste control room	
C/V Sump	MCR + Radwaste control room	High Level	MCR + Radwaste control room	C/V Sump
		Low Level	Radwaste control room	
Sump Tanks (Note 1)	MCR + Radwaste control room	High Level	MCR + Radwaste control room	Cell
		Low Level	Radwaste control room	
C/V Reactor Coolant Drain Tank	MCR + Radwaste control room	High Level	MCR + Radwaste control room	C/V Sump
		Low Level	Radwaste control room	
	MCR + Radwaste control room	High Pressure	MCR + Radwaste control room	
	MCR + radwaste control room	High Temp	MCR + Radwaste control room	
Detergent Drain Monitor Tank	Radwaste control room	High Level	Radwaste control room	A/B Sump
		Low Level	Radwaste control room	
Stand Pipe	Local + MCR	High Level	MCR	C/V Sump
	Local + MCR	Low Level	MCR	

Notes:

1. All the sump alarms in the MCR and radwaste control room except floor and equipment drain sumps located in A/B.
2. High level alarms in the radwaste control room are annunciated in the MCR as a common alarm.

Table 11.2-9 Input Parameters for the PWR-GALE Code (Sheet 1 of 2)

Design Parameter	Design Value
Core thermal power (MWt)	4,451
Reactor coolant mass(lb)	6.46E+05
Reactor coolant letdown flow rate (gpm)	180
CVCS cation demineralizer flow rate (gpm)	7
Number of SGs	4
Total main steam flow rate (lb/hr)	2.02E+07
Seccondary coolant mass in SG (lb)	1.35E+05
Total SG blowdown flow rate (lb/hr)	1.554E+05
Blowdown treatment method	0
Regeneration time of condensate polishing system	N/A
Fraction of feedwater through the condensate polishing system	0
Reactor coolant leak rate to the containment for noble gas (1/d)(1)	0.0002
Decontamination factor for detergent waste	1.0
Shim Bleed	-
Shim bleed flow rate (gpd)	2,875
Decontamination factor for I	5.0E+03
Decontamination factor for Cs and Rb	2.0E+03
Decontamination factor for others	1.0E+05
Collection time (days)	20
Process and discharge time (days)	2
Fraction of waste to be discharged	1.0
Coolant Drain	-
Coolant drainage flow rate (gpd)	900
Fraction of reactor coolant activity	0.1
Decontamination factor for I	5.0E+03
Decontamination factor for Cs and Rb	2.0E+03
Decontamination factor for others	1.0E+05
Collection time (days)	20
Process and discharge time (days)	2
Fraction of waste to be discharged	1.0
Dirty Waste	
Dirty drainageflow rate (gpd)	2,023
Fraction of reactor coolant activity	0.18
Decontamination factor for I	1.0E+05
Decontamination factor for Cs and Rb	2.0E+02
Decontamination factor for others	1.0E+04
Collection time (days)	5
Process and discharge time (days)	0
Fraction of waste to be discharged	1.0

Notes:

1. This value is based on 10 gpd of leakage inside containment (to containment sump)(see Table 11.2-2) and reactor coolant mass.
2. The basis of the PWR-GALE source term calculation uses a built-in plant capacity factor of 80%, which is less than the expected capacity factor for the US-APWR. The difference in capacity factor has no impact on the calculated liquid effluent release and resultant dose, but there is a minor impact on the gaseous effluent releases and resultant doses. However, the calculated values have sufficient margin to the acceptance criteria to cover any possible US APWR capacity factor between 80% and 100%.

Table 11.2-9 Input Parameters for the PWR-GALE Code (Sheet 2 of 2)

Blowdown Waste	
Fraction of the blowdown stream processed	1.0
Decontamination factor for I	1.0E+02
Decontamination factor for Cs and Rb	1.0E+02
Decontamination factor for others	1.0E+03
Collection time	N/A
Process and discharge time	N/A
Fraction of waste to be discharged	0
Regenerant Waste	N/A
Gaseous Waste Management System and HVAC System	
Continuous gas stripping of full letdown flow	None
Holdup time for Xe (days)	45
Holdup time for Kr (days)	2.55
Fill time of decay tanks for gas stripper	N/A
Gas waste system: High-efficiency particulate air (HEPA) filter	None
Auxiliary building: Charcoal filter	None
Auxiliary building: HEPA filter	None
Containment volume (ft^3)	2.74E+06
Containment atmosphere internal cleanup rate (ft^3/min)	0
Removal efficiency of charcoal filter (%)	0
Removal efficiency of HEPA filter (%)	0
Containment high volume purge:	
Number of purges per year (in addition to two shutdown purges)	0
Removal efficiency of charcoal filter (%)	0
Removal efficiency of HEPA filter (%)	99
Containment low volume purge rate (ft^3/min)	2,000
Removal efficiency of charcoal filter (%)	70
Removal efficiency of HEPA filter (%)	99
Fraction of iodine released from blowdown tank vent	0
Fraction of iodine removed from main condenser air ejector release	0

Notes:

1. This value is based on 10 gpd of leakage inside containment (to containment sump)(see Table 11.2-2) and reactor coolant mass.
2. The basis of the PWR-GALE source term calculation uses a built-in plant capacity factor of 80%, which is less than the expected capacity factor for the US-APWR. The difference in capacity factor has no impact on the calculated liquid effluent release and resultant dose, but there is a minor impact on the gaseous effluent releases and resultant doses. However, the calculated values have sufficient margin to the acceptance criteria to cover any possible US APWR capacity factor between 80% and 100%.

Table 11.2-10 Liquid Releases Calculated by the PWR-GALE Code (Ci/yr) (Sheet 1 of 2)

Isotope	Shim Bleed	Misc. Wastes	Turbine Building	Combined Releases	Detergent Waste	TOTAL Releases (1)
Corrosion and Activation Products						
Na-24	0.00000	0.00029	0.00002	0.00031	0.00000	4.70E-03
P-32	0.00000	0.00000	0.00000	0.00000	0.00018	1.80E-04
Cr-51	0.00000	0.00008	0.00000	0.00008	0.00470	6.00E-03
Mn-54	0.00000	0.00004	0.00000	0.00005	0.00380	4.50E-03
Fe-55	0.00000	0.00003	0.00000	0.00003	0.00720	7.70E-03
Fe-59	0.00000	0.00001	0.00000	0.00001	0.00220	2.30E-03
Co-58	0.00000	0.00012	0.00000	0.00013	0.00790	9.80E-03
Co-60	0.00000	0.00001	0.00000	0.00002	0.01400	1.40E-02
Ni-63	0.00000	0.00000	0.00000	0.00000	0.00170	1.70E-03
Zn-65	0.00000	0.00001	0.00000	0.00001	0.00000	2.20E-04
W-187	0.00000	0.00002	0.00000	0.00002	0.00000	3.50E-04
Np-239	0.00000	0.00003	0.00000	0.00004	0.00000	5.30E-04
Fission Products						
Rb-88	0.00000	0.00187	0.00000	0.00187	0.00000	2.80E-02
Sr-89	0.00000	0.00000	0.00000	0.00000	0.00009	1.50E-04
Sr-90	0.00000	0.00000	0.00000	0.00000	0.00001	1.80E-05
Sr-91	0.00000	0.00000	0.00000	0.00000	0.00000	6.80E-05
Y-91m	0.00000	0.00000	0.00000	0.00000	0.00000	4.40E-05
Y-91	0.00000	0.00000	0.00000	0.00000	0.00008	9.00E-05
Y-93	0.00000	0.00002	0.00000	0.00002	0.00000	3.10E-04
Zr-95	0.00000	0.00001	0.00000	0.00001	0.00110	1.30E-03
Nb-95	0.00000	0.00001	0.00000	0.00001	0.00190	2.00E-03
Mo-99	0.00000	0.00011	0.00000	0.00011	0.00006	1.70E-03
Tc-99m	0.00000	0.00011	0.00000	0.00011	0.00000	1.70E-03
Ru-103	0.00001	0.00020	0.00000	0.00021	0.00029	3.40E-03
Rh-103m	0.00001	0.00020	0.00000	0.00021	0.00000	3.10E-03
Ru-106	0.00010	0.00243	0.00005	0.00257	0.00890	4.70E-02
Rh-106	0.00010	0.00243	0.00005	0.00257	0.00000	3.90E-02
Ag-110m	0.00000	0.00003	0.00000	0.00004	0.00120	1.80E-03

Notes:

1. The release totals include an adjustment of 0.16 Ci/yr added by the PWR-GALE Code to account for AOOs.
2. An entry of 0.00000 indicates that the value is less than 1.0E-5 Ci/yr.

Table 11.2-10 Liquid Releases Calculated by the PWR-GALE Code (Ci/yr) (Sheet 2 of 2)

Isotope	Shim Bleed	Misc. Wastes	Turbine Building	Combined Releases	Detergent Waste	TOTAL Releases (1)
Fission Products						
Ag-110	0.00000	0.00000	0.00000	0.00000	0.00000	7.20E-05
Sb-124	0.00000	0.00000	0.00000	0.00000	0.00043	4.30E-04
Te-129m	0.00000	0.00000	0.00000	0.00001	0.00000	7.80E-05
Te-129	0.00000	0.00002	0.00000	0.00002	0.00000	3.10E-04
Te-131m	0.00000	0.00002	0.00000	0.00002	0.00000	2.50E-04
Te-131	0.00000	0.00000	0.00000	0.00001	0.00000	7.60E-05
I-131	0.00002	0.00001	0.00000	0.00002	0.00160	2.00E-03
Te-132	0.00000	0.00003	0.00000	0.00003	0.00000	4.70E-04
I-132	0.00000	0.00001	0.00001	0.00002	0.00000	3.10E-04
I-133	0.00001	0.00002	0.00003	0.00005	0.00000	8.10E-04
I-134	0.00000	0.00001	0.00000	0.00001	0.00000	8.90E-05
Cs-134	0.00002	0.00005	0.00000	0.00007	0.01100	1.20E-02
I-135	0.00000	0.00002	0.00003	0.00005	0.00000	7.80E-04
Cs-136	0.00030	0.00112	0.00000	0.00141	0.00037	2.20E-02
Cs-137	0.00003	0.00008	0.00000	0.00011	0.01600	1.80E-02
Ba-137m	0.00003	0.00000	0.00000	0.00003	0.00000	4.60E-04
Ba-140	0.00001	0.00031	0.00001	0.00033	0.00091	5.80E-03
La-140	0.00001	0.00051	0.00001	0.00053	0.00000	8.00E-03
Ce-141	0.00000	0.00000	0.00000	0.00000	0.00023	2.90E-04
Ce-143	0.00000	0.00003	0.00000	0.00003	0.00000	5.00E-04
Pr-143	0.00000	0.00001	0.00000	0.00001	0.00000	7.90E-05
Ce-144	0.00000	0.00011	0.00000	0.00011	0.00390	5.60E-03
Pr-144	0.00000	0.00011	0.00000	0.00011	0.00000	1.70E-03
All others	0.00000	0.00000	0.00000	0.00000	0.00000	1.20E-05
TOTAL (except H-3)	**0.00065**	**0.01053**	**0.00025**	**0.01143**	**0.08975**	**2.60E-01**
H-3 release						1.60E+03

Notes:

1. The release totals include an adjustment of 0.16 Ci/yr added by the PWR-GALE Code to account for AOOs.
2. An entry of 0.00000 indicates that the value is less than 1.0E-5 Ci/yr.

Table 11.2-11 Liquid Releases with Maximum Defined Fuel Defects (Ci/yr) (Sheet 1 of 2)

Isotope	Shim Bleed	Misc. Wastes	Turbine Building	Combined Releases	Detergent Waste	TOTAL Releases (1)
Corrosion and Activation Products						
Na-24	0.00000	0.00029	0.00002	0.00031	0.00000	3.20E-04
P-32	0.00000	0.00000	0.00000	0.00000	0.00018	1.80E-04
Cr-51	0.00000	0.00008	0.00000	0.00008	0.00470	4.78E-03
Mn-54	0.00000	0.00004	0.00000	0.00004	0.00380	3.84E-03
Fe-55	0.00000	0.00003	0.00000	0.00003	0.00720	7.23E-03
Fe-59	0.00000	0.00001	0.00000	0.00001	0.00220	2.21E-03
Co-58	0.00000	0.00012	0.00000	0.00012	0.00790	8.02E-03
Co-60	0.00000	0.00001	0.00000	0.00001	0.01400	1.40E-02
Ni-63	0.00000	0.00000	0.00000	0.00000	0.00170	1.70E-03
Zn-65	0.00000	0.00001	0.00000	0.00001	0.00000	1.03E-05
W-187	0.00000	0.00002	0.00000	0.00002	0.00000	2.06E-05
Np-239	0.00000	0.00003	0.00000	0.00003	0.00000	3.09E-05
Fission Products						
Rb-88	0.00000	0.03849	0.00000	0.03849	0.00000	3.97E-02
Sr-89	0.00000	0.00000	0.00000	0.00000	0.00009	9.00E-05
Sr-90	0.00000	0.00000	0.00000	0.00000	0.00001	1.00E-05
Sr-91	0.00000	0.00000	0.00000	0.00000	0.00000	0.00E+00
Y-91m	0.00000	0.00000	0.00000	0.00000	0.00000	0.00E+00
Y-91	0.00000	0.00000	0.00000	0.00000	0.00008	8.00E-05
Y-93	0.00000	0.00000	0.00000	0.00000	0.00000	0.00E+00
Zr-95	0.00000	0.00001	0.00000	0.00001	0.00110	1.11E-03
Nb-95	0.00000	0.00002	0.00000	0.00002	0.00190	1.92E-03
Mo-99	0.00000	0.01333	0.00000	0.01333	0.00006	1.38E-02
Tc-99m	0.00000	0.00527	0.00000	0.00527	0.00000	5.44E-03
Ru-103	0.00000	0.00001	0.00000	0.00001	0.00029	3.00E-04
Rh-103m	0.00000	0.00001	0.00000	0.00001	0.00000	1.03E-05
Ru-106	0.00000	0.00001	0.00000	0.00001	0.00890	8.91E-03
Rh-106	0.00000	0.00001	0.00000	0.00001	0.00000	1.03E-05
Ag-110m	0.00000	0.00000	0.00000	0.00000	0.00120	1.20E-03
Ag-110	0.00000	0.00000	0.00000	0.00000	0.00000	0.00E+00
Sb-124	0.00000	0.00000	0.00000	0.00000	0.00043	4.30E-04
Te-129m	0.00000	0.00000	0.00000	0.00000	0.00000	0.00E+00
Te-129	0.00000	0.00000	0.00000	0.00000	0.00000	0.00E+00

Notes:
1. The release totals include an adjustment of 0.16 Ci/yr added by the PWR-GALE Code to account for AOOs.
2. An entry of 0.00000 indicates that the value is less than 1.0E-5 Ci/yr.

Table 11.2-11 Liquid Releases with Maximum Defined Fuel Defects (Ci/yr) (Sheet 2 of 2)

Isotope	Shim Bleed	Misc. Wastes	Turbine Building	Combined Releases	Detergent Waste	TOTAL Releases (1)
Te-131m	0.00000	0.00033	0.00000	0.00033	0.00000	3.40E-04
Te-131	0.00000	0.00000	0.00000	0.00000	0.00000	0.00E+00
I-131	0.02891	0.01445	0.00000	0.04336	0.00160	4.63E-02
Te-132	0.00000	0.00526	0.00000	0.00526	0.00000	5.43E-03
I-132	0.00000	0.00015	0.00015	0.00030	0.00000	3.09E-04
I-133	0.00163	0.00327	0.00491	0.00981	0.00000	1.01E-02
I-134	0.00000	0.00005	0.00000	0.00005	0.00000	5.16E-05
Cs-134	0.73457	1.83643	0.00000	2.57100	0.01100	2.66E+00
I-135	0.00000	0.00083	0.00125	0.00208	0.00000	2.15E-03
Cs-136	0.12019	0.44873	0.00000	0.56892	0.00037	5.87E-01
Cs-137	0.43698	1.16528	0.00000	1.60226	0.01600	1.67E+00
Ba-137m	0.20917	0.00000	0.00000	0.20917	0.00000	2.16E-01
Ba-140	0.00000	0.00010	0.00000	0.00010	0.00091	1.01E-03
La-140	0.00000	0.00002	0.00000	0.00002	0.00000	2.06E-05
Ce-141	0.00000	0.00000	0.00000	0.00000	0.00023	2.30E-04
Ce-143	0.00000	0.00000	0.00000	0.00000	0.00000	0.00E+00
Pr-143	0.00000	0.00000	0.00000	0.00000	0.00000	0.00E+00
Ce-144	0.00000	0.00001	0.00000	0.00001	0.00390	3.91E-03
Pr-144	0.00000	0.00001	0.00000	0.00001	0.00000	1.03E-05
TOTAL (except H-3)	**1.53145**	**3.53272**	**0.00633**	**5.07050**	**0.08975**	**5.32E+00**
H-3 release						1.60E+03

Notes:
1. The release totals include an adjustment of 0.16 Ci/yr added by the PWR-GALE Code to account for AOOs.
2. An entry of 0.00000 indicates that the value is less than 1.0E-5 Ci/yr.

Table 11.2-12 Comparison of Annual Average Liquid Release Concentrations with 10 CFR 20 (Expected Releases) (Sheet 1 of 2)

Isotope (1)	Discharge Concentration (μCi/ml) (2)	Effluent Concentration Limit (μCi/ml) (3)	Fraction of Concentration Limit
Na-24	2.29E-10	5.00E-05	4.58E-06
P-32	8.77E-12	9.00E-06	9.74E-07
Cr-51	2.92E-10	5.00E-04	5.84E-07
Mn-54	2.19E-10	3.00E-05	7.31E-06
Fe-55	3.75E-10	1.00E-04	3.75E-06
Fe-59	1.12E-10	1.00E-05	1.12E-05
Co-58	4.77E-10	2.00E-05	2.39E-05
Co-60	6.82E-10	3.00E-06	2.27E-04
Ni-63	8.28E-11	1.00E-04	8.28E-07
Zn-65	1.07E-11	5.00E-06	2.14E-06
W-187	1.70E-11	3.00E-05	5.68E-07
Np-239	2.58E-11	2.00E-05	1.29E-06
Rb-88	1.36E-09	4.00E-04	3.41E-06
Sr-89	7.31E-12	8.00E-06	9.13E-07
Sr-90	8.77E-13	5.00E-07	1.75E-06
Sr-91	3.31E-12	2.00E-05	1.66E-07
Y-91m	2.14E-12	2.00E-03	1.07E-09
Y-91	4.38E-12	8.00E-06	5.48E-07
Y-93	1.51E-11	2.00E-05	7.55E-07
Zr-95	6.33E-11	2.00E-05	3.17E-06
Nb-95	9.74E-11	3.00E-05	3.25E-06
Mo-99	8.28E-11	2.00E-05	4.14E-06
Tc-99m	8.28E-11	1.00E-03	8.28E-08
Ru-103	1.66E-10	3.00E-05	5.52E-06
Rh-103m	1.51E-10	6.00E-03	2.52E-08
Ru-106	2.29E-09	3.00E-06	7.63E-04
Ag-110m	8.77E-11	6.00E-06	1.46E-05
Sb-124	2.09E-11	7.00E-06	2.99E-06
Te-129m	3.80E-12	7.00E-06	5.43E-07
Te-129	1.51E-11	4.00E-04	3.77E-08
Te-131m	1.22E-11	8.00E-06	1.52E-06
Te-131	3.70E-12	8.00E-05	4.63E-08

Notes:

1. Rh-106,Ag-110,Ba-137m are not included in Table 2 of 10 CFR 20 Appendix B. Therefore, these nuclides are excluded from the calculation of the discharge concentration.
2. Annual average discharge concentration based on release of average daily discharge for 292 days per year with 12,900 gpm dilution flow. (See Section 10.4.5)
3. 10 CFR 20 Appendix B, Table 2

Table 11.2-12 Comparison of Annual Average Liquid Release Concentrations with 10 CFR 20 (Expected Releases) (Sheet 2 of 2)

Isotope (1)	Discharge Concentration (μCi/ml) (2)	Effluent Concentration Limit (μCi/ml) (3)	Fraction of Concentration Limit
I-131	9.74E-11	1.00E-06	9.74E-05
Te-132	2.29E-11	9.00E-06	2.54E-06
I-132	1.51E-11	1.00E-04	1.51E-07
I-133	3.94E-11	7.00E-06	5.64E-06
I-134	4.33E-12	4.00E-04	1.08E-08
Cs-134	5.84E-10	9.00E-07	6.49E-04
I-135	3.80E-11	3.00E-05	1.27E-06
Cs-136	1.07E-09	6.00E-06	1.79E-04
Cs-137	8.77E-10	1.00E-06	8.77E-04
Ba-140	2.82E-10	8.00E-06	3.53E-05
La-140	3.90E-10	9.00E-06	4.33E-05
Ce-141	1.41E-11	3.00E-05	4.71E-07
Ce-143	2.44E-11	2.00E-05	1.22E-06
Pr-143	3.85E-12	2.00E-05	1.92E-07
Ce-144	2.73E-10	3.00E-06	9.09E-05
Pr-144	8.28E-11	6.00E-04	1.38E-07
H-3	7.79E-05	1.00E-03	7.79E-02
TOTAL			**8.10E-02**

Notes:

1. Rh-106,Ag-110,Ba-137m are not included in Table 2 of 10 CFR 20 Appendix B. Therefore, these nuclides are excluded from the calculation of the discharge concentration.
2. Annual average discharge concentration based on release of average daily discharge for 292 days per year with 12,900 gpm dilution flow. (See Section 10.4.5)
3. 10 CFR 20 Appendix B, Table 2

Table 11.2-13 Comparison of Annual Average Liquid Release Concentrations with 10 CFR 20 (Maximum Releases) (Sheet 1 of 2)

Isotope(1)	Discharge Concentration (μ Ci/ml) (2)	Effluent Concentration Limit (μ Ci/ml) (3)	Fraction of Concentration Limit
Na-24	1.56E-11	5.00E-05	3.11E-07
P-32	8.77E-12	9.00E-06	9.74E-07
Cr-51	2.33E-10	5.00E-04	4.66E-07
Mn-54	1.87E-10	3.00E-05	6.24E-06
Fe-55	3.52E-10	1.00E-04	3.52E-06
Fe-59	1.08E-10	1.00E-05	1.08E-05
Co-58	3.91E-10	2.00E-05	1.95E-05
Co-60	6.82E-10	3.00E-06	2.27E-04
Ni-63	8.28E-11	1.00E-04	8.28E-07
Zn-65	5.02E-13	5.00E-06	1.00E-07
W-187	1.00E-12	3.00E-05	3.35E-08
Np-239	1.51E-12	2.00E-05	7.54E-08
Rb-88	1.93E-09	4.00E-04	4.84E-06
Sr-89	4.38E-12	8.00E-06	5.48E-07
Sr-90	4.87E-13	5.00E-07	9.74E-07
Sr-91	0.00E+00	2.00E-05	0.00E+00
Y-91m	0.00E+00	2.00E-03	0.00E+00
Y-91	3.90E-12	8.00E-06	4.87E-07
Y-93	0.00E+00	2.00E-05	0.00E+00
Zr-95	5.41E-11	2.00E-05	2.70E-06
Nb-95	9.35E-11	3.00E-05	3.12E-06
Mo-99	6.73E-10	2.00E-05	3.36E-05
Tc-99m	2.65E-10	1.00E-03	2.65E-07
Ru-103	1.46E-11	3.00E-05	4.88E-07
Rh-103m	5.02E-13	6.00E-03	8.37E-11
Ru-106	4.34E-10	3.00E-06	1.45E-04
Ag-110m	5.84E-11	6.00E-06	9.74E-06
Sb-124	2.09E-11	7.00E-06	2.99E-06
Te-129m	0.00E+00	7.00E-06	0.00E+00
Te-129	0.00E+00	4.00E-04	0.00E+00
Te-131m	1.66E-11	8.00E-06	2.07E-06

Notes:

1. Rh-106,Ag-110,Ba-137m are not included in Table 2 of 10 CFR 20 Appendix B. Therefore, these nuclides are excluded from the calculation of the discharge concentration.
2. Annual average discharge concentration based on release of average daily discharge for 292 days per year with 12,900 gpm dilution flow.
3. 10 CFR 20 Appendix B, Table 2

Table 11.2-13 Comparison of Annual Average Liquid Release Concentrations with 10 CFR 20 (Maximum Releases) (Sheet 2 of 2)

Isotope(1)	Discharge Concentration (μCi/ml) (2)	Effluent Concentration Limit (μCi/ml) (3)	Fraction of Concentration Limit
Te-131	0.00E+00	8.00E-05	0.00E+00
I-131	2.26E-09	1.00E-06	2.26E-03
Te-132	2.64E-10	9.00E-06	2.94E-05
I-132	1.51E-11	1.00E-04	1.51E-07
I-133	4.93E-10	7.00E-06	7.04E-05
I-134	2.51E-12	4.00E-04	6.28E-09
Cs-134	1.30E-07	9.00E-07	1.44E-01
I-135	1.04E-10	3.00E-05	3.48E-06
Cs-136	2.86E-08	6.00E-06	4.77E-03
Cs-137	8.13E-08	1.00E-06	8.13E-02
Ba-140	4.93E-11	8.00E-06	6.17E-06
La-140	1.00E-12	9.00E-06	1.12E-07
Ce-141	1.12E-11	3.00E-05	3.73E-07
Ce-143	0.00E+00	2.00E-05	0.00E+00
Pr-143	0.00E+00	2.00E-05	0.00E+00
Ce-144	1.90E-10	3.00E-06	6.35E-05
Pr-144	5.02E-13	6.00E-04	8.37E-10
H-3	7.79E-05	1.00E-03	7.79E-02
TOTAL			**3.11E-01**

Notes:

1. Rh-106,Ag-110,Ba-137m are not included in Table 2 of 10 CFR 20 Appendix B. Therefore, these nuclides are excluded from the calculation of the discharge concentration.
2. Annual average discharge concentration based on release of average daily discharge for 292 days per year with 12,900 gpm dilution flow.
3. 10 CFR 20 Appendix B, Table 2

Table 11.2-14 Input Parameters for the LADTAP II Code

Parameter	Value
Midpoint of Plant Life(yr)	30
Reactor effluent discharge rate(gpm)	12,900
Water type selection	Freshwater
Reconcentration model index	0 (no model)
Shore-width factor	0.2
Dilution factor -aquatic food and boating	10
Dilution factor - shoreline and swimming	10
Dilution factor - drinking water	10
Dilution factor for irrigation water usage location for the current food product	10
Irrigation rate(Liter/m^2-month)	31
Animal considered for milk pathway	Cow
Fraction of animal feed not contaminated	0
Fraction of animal water not contaminated	0
Source terms	Table 11.2-10
Other parameters	RG 1.109

Table 11.2-15 Individual Dose from Liquid Effluents

	Annual Doses（mrem/yr）							
PATHWAY	SKIN	BONE	LIVER	T.BODY	THYROID	KIDNEY	LUNG	GI-LLI
Drinking								
Adult	-	8.69E-03	4.91E-01	4.88E-01	4.89E-01	4.83E-01	4.79E-01	5.11E-01
Teenager	-	8.32E-03	3.49E-01	3.43E-01	3.47E-01	3.42E-01	3.39E-01	3.61E-01
Child	-	2.38E-02	6.70E-01	6.52E-01	6.69E-01	6.56E-01	6.48E-01	6.69E-01
Infant	-	2.50E-02	6.64E-01	6.39E-01	6.71E-01	6.44E-01	6.37E-01	6.49E-01
Fish								
Adult	-	6.53E-01	7.31E-01	5.35E-01	1.70E-02	2.66E-01	8.67E-02	1.82E-01
Teenager	-	6.97E-01	7.47E-01	3.34E-01	1.39E-02	2.66E-01	9.72E-02	1.34E-01
Child	-	8.78E-01	6.51E-01	1.68E-01	1.24E-02	2.23E-01	7.69E-02	5.46E-02
Shoreline								
Adult	8.61E-04	7.34E-04	7.34E-04	7.34E-04	7.34E-04	7.34E-04	7.34E-04	7.34E-04
Teenager	4.81E-03	4.10E-03	4.10E-03	4.10E-03	4.10E-03	4.10E-03	4.10E-03	4.10E-03
Child	1.00E-03	8.56E-04	8.56E-04	8.56E-04	8.56E-04	8.56E-04	8.56E-04	8.56E-04
Irrigated Foods：Vegetables								
Adult	-	1.22E-02	3.51E-01	3.47E-01	3.36E-01	3.41E-01	3.36E-01	3.76E-01
Teenager	-	2.02E-02	4.36E-01	4.21E-01	4.12E-01	4.20E-01	4.12E-01	4.62E-01
Child	-	4.78E-02	6.92E-01	6.57E-01	6.52E-01	6.64E-01	6.51E-01	6.88E-01
Irrigated Foods：Leafy Vegetables								
Adult	-	1.55E-03	4.34E-02	4.28E-02	4.20E-02	4.21E-02	4.14E-02	4.67E-02
Teenager	-	1.40E-03	2.92E-02	2.82E-02	2.80E-02	2.81E-02	2.75E-02	3.10E-02
Child	-	2.48E-03	3.48E-02	3.30E-02	3.33E-02	3.33E-02	3.26E-02	3.46E-02
Irrigated Foods：Milk								
Adult	-	5.94E-03	2.09E-01	2.07E-01	2.02E-01	2.03E-01	2.01E-01	2.01E-01
Teenager	-	1.06E-02	2.77E-01	2.67E-01	2.64E-01	2.66E-01	2.62E-01	2.62E-01
Child	-	2.52E-02	4.39E-01	4.17E-01	4.19E-01	4.20E-01	4.14E-01	4.12E-01
Irrigated Foods：Meat								
Adult	-	4.04E-03	7.20E-02	7.21E-02	7.09E-02	7.75E-02	7.10E-02	2.83E-01
Teenager	-	3.38E-03	4.32E-02	4.30E-02	4.23E-02	4.78E-02	4.24E-02	1.75E-01
Child	-	6.33E-03	5.22E-02	5.20E-02	5.11E-02	5.84E-02	5.12E-02	1.32E-01
Total								
Adult	8.61E-04	6.86E-01	1.90E+00	1.69E+00	1.16E+00	1.41E+00	1.22E+00	1.60E+00
Teenager	4.81E-03	7.45E-01	1.89E+00	1.44E+00	1.11E+00	1.37E+00	1.18E+00	1.43E+00
Child	1.00E-03	9.84E-01	2.54E+00	1.98E+00	1.84E+00	2.06E+00	1.87E+00	1.99E+00
Infant	-	2.50E-02	6.64E-01	6.39E-01	6.71E-01	6.44E-01	6.37E-01	6.49E-01

Table 11.2-16 Parameters for Calculation of Source term for Liquid Containing Tank Failures(4)(5)(6)

Tank	Volume of tank (gal) (1)	Flow Rate (gpd)	Fraction of Reactor Coolant Activity (PCA)	Tank Factor(2) (3)
Holdup Tank	1.2E+5	Shim Bleed : 2875 Coolant Drain : 900	Shim Bleed : 1.0 Coolant Drain : 0.1	1.0 (All nuclides)
Waste Holdup Tank	3.0E+4	2023	0.18	1.0 (All nuclides)
Boric Acid Tank	6.6E+4	Shim Bleed : 2875 Coolant Drain : 900	Shim Bleed : 1.0 Coolant Drain : 0.1	1.0(Tritium) 0.2(Anion) 0.04(Cs,Rb) 0.2(Others)

Notes:

1. It is assumed that water equivalent to 80% of the tank volume is discharged and the volume of water contributing to dilution is 4.4E + 10 gal for defining the hydrological dilution factor of each tank.

   Hydrological Dilution Factor = 4.4E+10 / (Tank Volume x 0.8)

2. Tank factor is the ratio considering the removal effect by demineralizers or other treatment equipments prior to the tank.
3. The TFs of evaporators express the increase in concentration of radionuclides in the evaporator bottoms resulting from evaporator operation. The value of TF for evaporator is 0.02.
4. The basis of the RATAF source term calculation uses a built-in plant capacity factor of 80%, which is less than the expected capacity factor for the US-APWR. This difference in capacity factor has no impact on liquid effluent release concentrations due to liquid containing tank failures.
5. Dilution factor (1.00E-20) and travel time (0 days) input parameters do not directly affect the concentrations of the tanks. Because RATAF code only display results for significant concentrations at the critical receptor, these parameters were set in order to display all the nuclides described in Table 11.2-17.
6. Other RATAF input parameters not described in this table are the same as PWR-GALE input parameters described in Table 11.2-9.

Table 11.2-17 Source term for Liquid Containing Tank Failures (Sheet 1 of 2)

Isotope	Concentration in the tank (μCi/ml)(Note 2)		
	Holdup Tank	Boric Acid Tank	Waste Holdup Tank
Corrosion and activation products			
H-3	7.8E-01	7.4E-01	1.8E-01
Cr-51	7.7E-05	3.0E-05	1.6E-04
Mn-54	1.6E-05	4.2E-05	3.0E-05
Mn-56	Note 1		
Fe-55	8.6E-05	3.4E-04	1.6E-04
Fe-59	4.5E-05	2.5E-05	8.9E-05
Co-58	7.7E-04	6.4E-04	1.5E-03
Co-60	1.1E-04	4.8E-04	1.9E-04
Zn-65	Note 1		
W-187	Note 1		
Np-239	7.9 E-05	1.4E-05	3.0E-04
Fission products			
Br-84	3.5E-07	6.4E-08	1.3E-06
Rb-88	6.2E-05	5.6E-05	6.0E-05
Sr-89	1.6E-05	1.0E-05	3.1E-05
Sr-90	5.4E-07	2.6E-06	9.7E-07
Sr-91	1.1E-06	2.0E-07	4.3E-06
Y-91m	7.3E-07	1.3E-07	2.8E-06
Y-91	3.4E-06	2.3E-06	6.4E-06
Y-92	Note 1		
Y-93	6.1E-08	1.1E-08	2.4E-07
Zr-95	2.9E-06	2.2E-06	5.5E-06
Nb-95	2.8E-06	3.1E-06	4.9E-06
Mo-99	7.8E-04	1.4E-04	2.9E-03
Tc-99m	7.3E-04	1.3E-04	2.6E-03
Tc-99	1.6E-10	9.5E-10	2.4E-10
Ru-103	1.9E-06	1.0E-06	4.0E-06
Ru-106	5.3E-07	1.6E-06	9.6E-07
Aq-110m	Note 1		
I-129	9.2E-14	2.0E-12	8.6E-14

Table 11.2-17 Source term for Liquid Containing Tank Failures (Sheet 2 of 2)

Isotope	Concentration in the tank (µCi/ml)(Note 2)		
	Holdup Tank	Boric Acid Tank	Waste Holdup Tank
Te-129m	6.0E-05	2.6E-05	1.2E-04
Te-129	3.8E-05	1.7E-05	7.9E-05
Te-131m	1.1E-05	2.0E-06	4.3E-05
Te-131	2.2E-06	3.8E-07	8.2E-06
I-131	6.1E-03	1.2E-03	1.7E-02
Te-132	2.9E-04	5.3E-05	1.0E-03
I-132	3.4E-04	6.1E-05	1.2E-03
I-133	1.2E-03	2.3E-04	4.8E-03
I-134	1.0E-05	1.8E-06	4.0E-05
Cs-134	5.6E-03	1.1E-01	2.5E-03
I-135	2.4E-04	4.3E-05	9.2E-04
Cs-136	1.7E-03	2.0E-03	1.0E-03
Cs-137	4.1E-03	1.0E-01	1.8E-03
Ba-140	6.6E-06	1.6E-06	1.6E-05
La-140	7.4E-06	1.8E-06	1.7E-05
Ce-141	3.0E-06	1.3E-06	6.1E-06
Ce143	1.9E-07	3.5E-08	7.4E-07
Ce-144	1.7E-06	4.3E-06	3.1E-06

Note:

1. These radionuclides are listed in the Interim Staff Guidance on standard review plan section 11.2 and Branch Technical Position 11-6 but are not included in the RCS source term radionuclides list used by RATAF.

2. Adjusted values of RATAF output to 0.12% fuel defect level (except for corrosion and activation products)

Table 11.2-18 Equipment Malfunction Analysis (Sheet 1 of 2)

Equipment Item	Malfunction	Result(s)	Alternative Action
Sump tanks	Sump malfunctions and oil is transferred to the WHTs	Sampling results from the WHTs would reveal excessive oil levels, which would reveal a failure in sumps. Oil booms could be added to the sumps to remove the oil from the waste stream; thereby; minimizing the potential for damage to downstream processing equipment.	Waste could be processed through the filter, carbon filter, and ion exchange columns but may result in premature degradation of these items. Sufficient storage within the holdup tanks is provided so that there is adequate time for a sump repair/replacement to be performed (based on normal waste generation rate) before the storage capacity is exhausted. Oily waste in the WHT can be drained back to the sump for oil removal.
Sump and Sump tanks	Pump failure	Two pumps are associated with each sump tank. In the event of a pump failure. the second pump will activate when high level is reached.	In the event of failure of both pumps, a portable pumping unit may be used. The high level alarm would notify plant personnel that remedial action is needed.
Equipment and floor drainage processing system	Waste holdup tank pump failure	In the event of a pump failure, processing will temporarily stop. Two pumps are provided, therefore, in the event of the failure of one pump, the alternate pump can be used until the failed pump can be repaired/replaced. This allows processing to continue.	Sufficient storage is provided within the HTs so that there is adequate time for a pump repair/replacement to be performed (based on the normal waste generation rate) before the storage capacity is exhausted.
Equipment and floor drainage processing system	Filter failure	In the event of the filter failing, solids may be passed to the carbon filter. This may result in premature degradation of the carbon filter and/or ion exchange media. Differential pressure readings across the filter will reveal any significant filter issues. Sufficient storage is provided so that there is ample time for a filter replacement to be performed (based on the normal waste generation rate) before the storage capacity is exhausted.	If the solids content is acceptably low, the filter could be bypassed and the waste processed through the carbon filter and ion exchange columns. Waste is sampled in the waste monitor tanks. If it is not within acceptable parameters, it will be recycled to the WHTs for further reprocessing.
Equipment and floor drainage processing system	Activated carbon filter failure	In the event of failure of the carbon filter, organic material may be passed to the ion exchange media, which could result in premature degradation of the resin. Sufficient storage is provided so that there is time for the carbon media in the filter to be replaced (based on the normal waste generation rate) before the storage capacity is exhausted.	The carbon filter could be bypassed and the waste processed through the ion exchange columns. Depending on the organic contents of the waste, this could result in the premature degradation of the ion exchange media but would not prevent reprocessing. Waste is sampled in the waste monitor tanks. If it is not within acceptable parameters, it will be recycled to the WHTs for further reprocessing.

Table 11.2-18 Equipment Malfunction Analysis (Sheet 2 of 2)

Equipment Item	Malfunction	Result(s)	Alternative Action
Equipment and floor drainage processing system	Ion exchange column failure	Failure/degradation of the resin may result to a decrease in the decontamination factors of the resin, and allow isotopes such as Cs-137 to pass through the columns to the waste monitoring tanks. This would be revealed by sampling results from the WHTs. Sufficient storage is provided so that there is time for the ion exchange media to be replaced (based on the normal waste generation rate) before the storage capacity is exhausted.	Reconfiguration of the connections between the columns could be performed to enable the waste to pass through ion exchange columns that contain good media. Waste is sampled in the waste monitor tanks. If it is not within acceptable parameters, it will be recycled to the WHTs for further reprocessing.
Equipment and floor drainage processing system	Waste monitor tank pump failure	In the event of a pump failure, transfer from the waste monitor tanks will temporarily stop. Two pumps are provided; therefore, in the event of the failure of one pump, the alternate pump can be used until the failed pump can be repaired/replaced. This allows waste transfer to continue.	Sufficient storage is provided so that there is adequate time for a pump repair/replacement to be performed (based on the normal waste generation rate) before the storage capacity is exhausted.
Equipment and floor drainage processing system	Radiation detector failure on the discharge line	Radiation monitor indication will be lost. The discharge valve will close and prevent further discharge.	Samples can be manually taken from the waste monitor tanks to confirm that the waste is acceptable for discharge.
Detergent drainage processing system	Generic failure (could be pump, monitor, filter, etc.)	This is a low volume waste stream with low radionuclide concentrations; hence, no significant ALARA concerns. The failure of any of the processing equipment such as a filter, pump, etc. will have no significant impact on plant operations. For example, portable pumps could be used in place of a failed pump. The waste could be transferred to the equipment and floor drain processing system, etc. As such, this system is not analyzed in great detail.	

Table 11.2-19 Expected Inputs to the LWMS, Processing Time and Days of Holdup

Subsystem(2)	Normal Volume (gpd)	Maximum Volume (Per Event in gallons)	Processing Rate (gpm)	Tank Storage Capacity (gallons) (3)	Storage Time at Maximum Generation Rate (days) (1)	Storage Time at Normal Generation Rate (days)	Time Needed to Process the Maximum Input (Hr)
Equipment and floor drainage	1,780	90,000	90	96,000	1.07	67.42	16.67
Chemical Drain	50	1,000	20	800	0.80	20.00	0.83
Detergent	200	1,900	20	2,000	1.05	12.50	1.60

Note:

1. Maximum volume per event is assumed to occur in one day.
2. Reactor Coolant Drain includes CVCS letdown and RCP seal leakage and is normally sent to Holdup tanks in CVCS.
3. Tank storage capacity is assumed 80% of full tank capacity.

Table 11.2-20 LWMS Component Classification

Component	Safety Classification
Waste Holdup Tank	RW IIc
Waste Monitor Tank	RW IIc
Detergent Drain Tank	RW IIc
Detergent Drain Monitor Tank	RW IIc
Chemical Drain Tank	RW IIc
LWMS Filter	RW IIa
LWMS IX Columns	RW IIc
Detergent Drain Filters	RW IIc

Table 11.2-21 Typical Service Level II Concrete Systems Epoxy Coatings

Coatings	DFT	Specific Permeability	
		$g/m^2/mil/24hrs$	$g/m^2/mil/24hrs$
No. 5500 Kolor-poxy self leveling floor coating	40 mils	0.6	2.2
No. 3500 Kolor-poxy self-priming surf. Enamel	16 mils	2.7	10.5
No. 3200 Kolor-poxy white primer	9 mils	2.2	8.7
N-series Neothane Enamel	7 mils	18.0	70.9

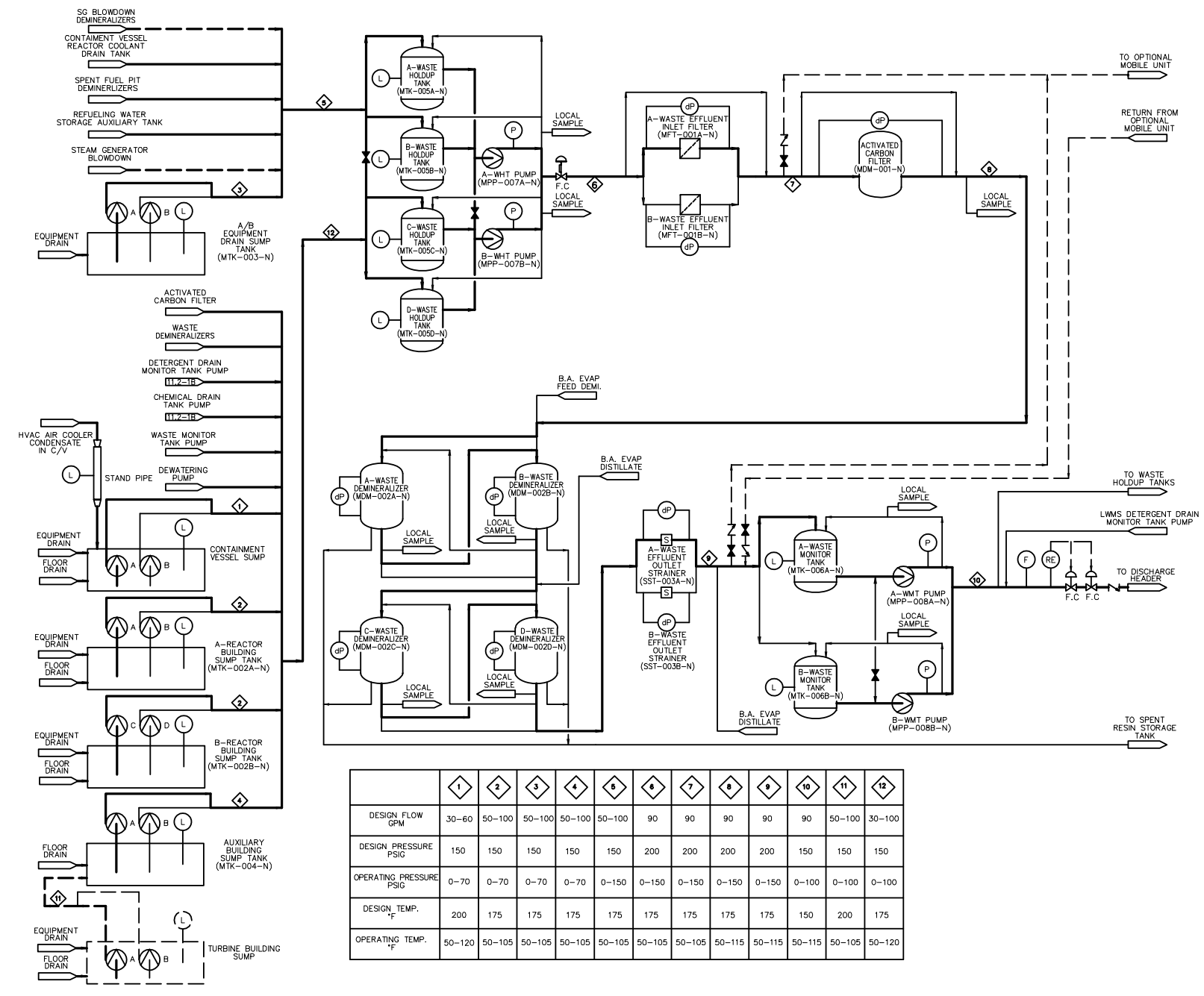

	1	2	3	4	5	6	7	8	9	10	11	12
DESIGN FLOW GPM	30-60	50-100	50-100	50-100	50-100	90	90	90	90	90	50-100	30-100
DESIGN PRESSURE PSIG	150	150	150	150	150	200	200	200	200	150	150	150
OPERATING PRESSURE PSIG	0-70	0-70	0-70	0-70	0-150	0-150	0-150	0-150	0-150	0-100	0-100	0-100
DESIGN TEMP. °F	200	175	175	175	175	175	175	175	175	150	200	175
OPERATING TEMP. °F	50-120	50-105	50-105	50-105	50-105	50-105	50-105	50-115	50-115	50-115	50-105	50-120

Figure 11.2-1 Liquid Waste Processing System Process Flow Diagram (Sheet 1 of 3)

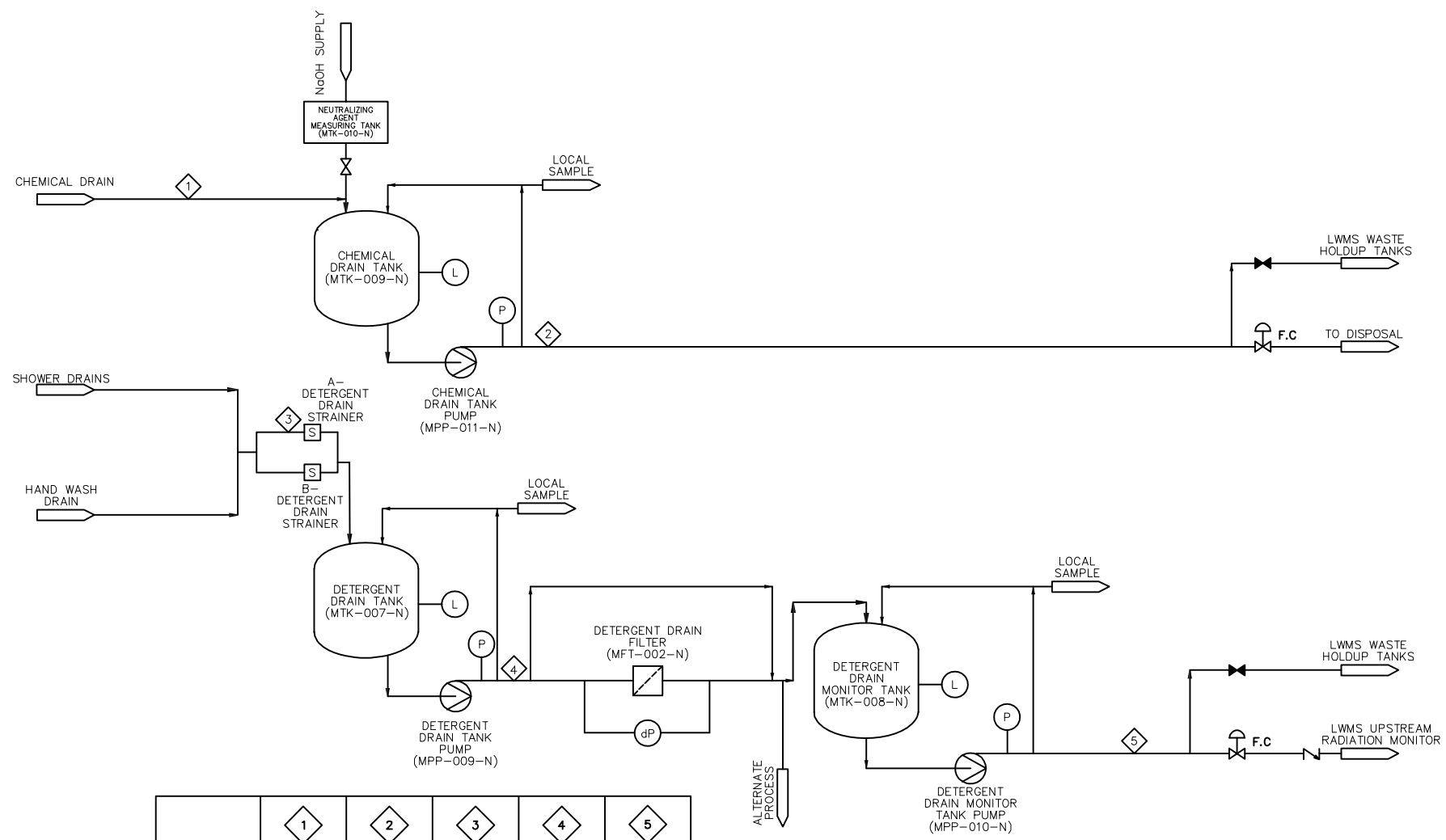

	1	2	3	4	5
DESIGN FLOW RATE (GPM)	1–10	3–20	1–10	15–20	15–20
DESIGN PRESS (PSIG)	0	150	0	150	150
OPERATING PRESSURE (PSIG)	0	0–50	0	0–100	0–100
DESIGN TEMP °F	175	175	175	175	150
OPERATING TEMP °F	50–150	50–105	50–150	50–150	50–105

Figure 11.2-1 Liquid Waste Processing System Process Flow Diagram (Sheet 2 of 3)

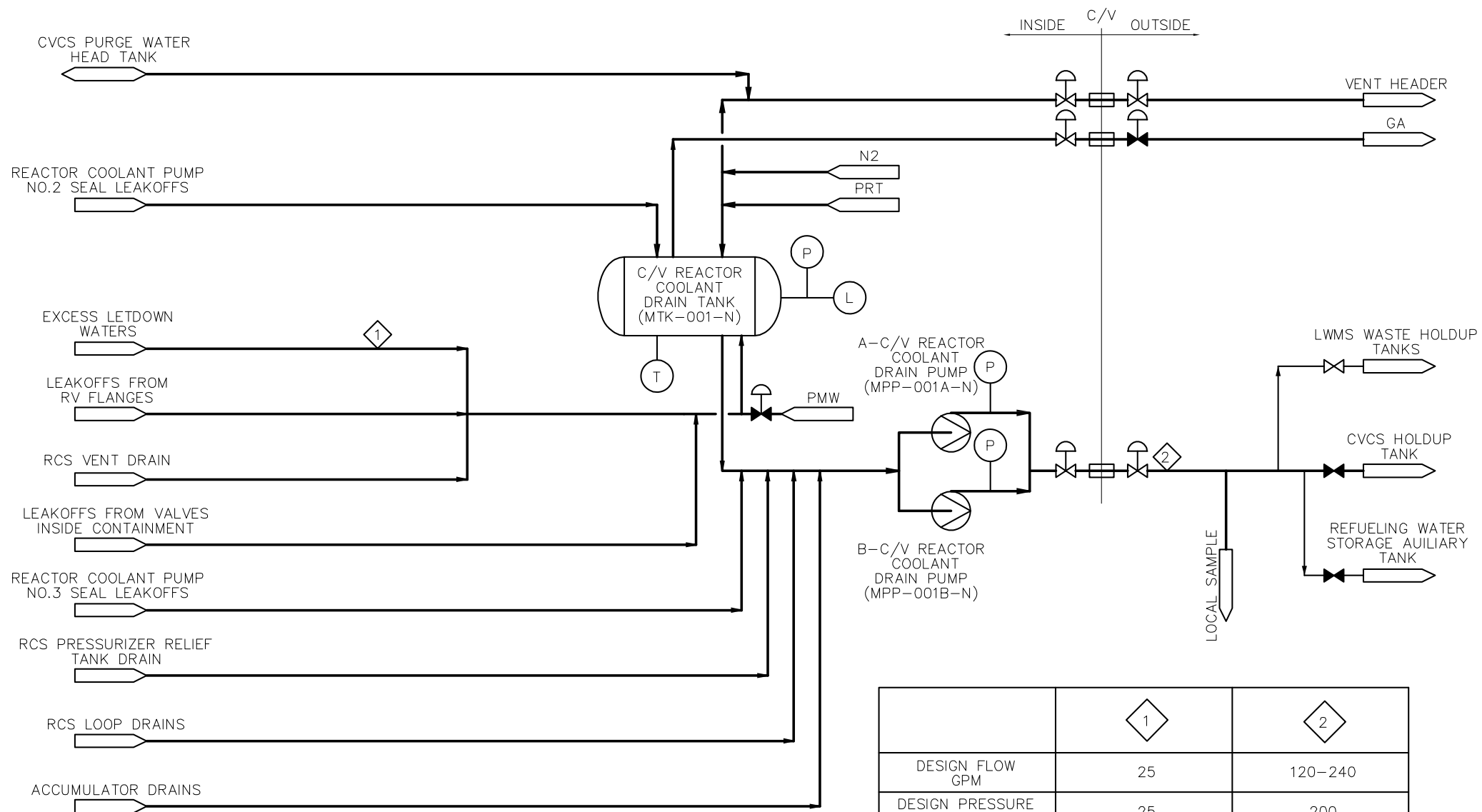

	1	2
DESIGN FLOW GPM	25	120–240
DESIGN PRESSURE PSIG	25	200
OPERATING PRESSURE PSIG	0	0–150
DESIGN TEMPERATURE °F	200	200
OPERATING TEMPERATURE °F	50–120	50–120

Figure 11.2-1 Liquid Waste Processing System Process Flow Diagram (Sheet 3 of 3)

11.3 Gaseous Waste Management System

The Gaseous waste management system (GWMS) is designed to monitor, control, collect, process, handle, store, and dispose of gaseous radioactive waste generated as the result of normal operation, including AOOs, using the guidance of NUREG-0017 (Ref. 11.3-1) and RG 1.143 (Ref. 11.3-2) as they apply to the GWMS.

The GWMS is designed to treat radioactive materials in the gaseous waste for release to the environment. The GWMS manages radioactive gases collected from the off-gas system (including charcoal delay beds), HTs and gas surge tanks, and other tank vents containing radioactive materials. The gaseous wastes from the above sources are treated to reduce the quantity of radioactive material prior to release to the environment.

The radiation level in the treated gases is verified with radiation monitors prior to release to the environment. The process and effluent radiological monitoring system is described in Section 11.5.

11.3.1 Design Bases

11.3.1.1 Design Objectives

The design objectives of the GWMS are as follows:

- Provide the capability to monitor, control, collect, process, handle, store, and dispose of radioactive gaseous waste generated as the result of normal operation and including AOOs.
- Provide reasonable assurance that the release of radioactive material in gaseous effluents is kept ALARA.
- Remove and reduce radioactive materials to the environment to meet the requirements of 10 CFR 50, Appendix I (Ref. 11.3-3).

The GWMS is designed for individual unit operation and no subsystems or components are shared with radwaste systems or other systems.

11.3.1.2 Design Criteria

The following design criteria are used:

- The GWMS design provides sufficient capacity, redundancy, and flexibility to collect and process incoming radioactive waste gases for release to meet the concentration limits of 10 CFR 20 (Ref. 11.3-4) during normal operation, including AOOs.
- The GWMS is designed to treat potentially radioactive gas to meet the concentration and dose limits of 10 CFR 20 (Ref. 11.3-4), the dose limits of 10 CFR 50, Appendix I (Ref. 11.3-3), and 10 CFR 50 Appendix A, General Design Criterion (GDC) 64 (Ref. 11.3-5).

- Interconnections between the GWMS and other plant systems are designed so that contaminations of non-radioactive systems are precluded and the potential for uncontrolled and unmonitored releases of radiation to the environment from a single failure are minimized. This feature meets the requirements of IE bulletin 80-10 (Ref. 11.3-27).

- The GWMS is designed to provide redundancy and storage capacity to process anticipated surge volumes due to equipment downtime and maintenance activities.

- The GWMS design is in compliance with ANSI/ANS-55.4 (Ref. 11.3-6).

- The GWMS is designed to comply with the ALARA principle for occupational doses. Shielding is provided to the equipment cubicles for the equipment containing design basis source terms to keep doses to personnel ALARA.

- The GWMS is designed to meet the requirements of GDC 60, 61, and 64 and the guidance of RG 1.143 (Ref. 11.3-2) so that waste gases are successfully processed. The GWMS includes radiation monitors, which continuously monitor the effluents prior to release into the environment.

- In accordance with ANSI/ANS-55.4 (Ref. 11.3-6), the A/B that houses the GWMS equipment is designed to withstand the effect of OBE.

- The GWMS equipment, piping, monitors, and controls are in compliance with ANSI/ANS 55.4 (Ref. 11.3-6) and RG 1.143 (Ref. 11.3-2). The GWMS is provided with hydrogen and oxygen monitors so that a lower explosive limit is not reached.

- The GWMS is designed to process the waste gases generated from normal operation and including AOOs. Stored gas that is not reused is treated and is discharged, provided that the gas meets release criteria.

- Streams in the GWMS are monitored for both hydrogen and oxygen content so that a flammable mixture is not reached. This feature complies with 10 CFR 50 Appendix A, GDC 3 (Ref. 11.3-7) and RG 1.189 (Ref. 11.3-8).

- The GWMS is designed so that the average annual dose at the site boundary does not exceed the limits of 10 CFR 50, Appendix I (Ref. 11.3-3) during normal operation including AOOs.

- The GWMS equipment is designed, located, and shielded in accordance with RG 8.8 (Ref. 11.3-9).

11.3.1.3 Other Design Considerations

In addition to the listed design criteria, the following consideration is satisfied:

- The A/B, which houses the gaseous waste treatment system, is designed to seismic category II requirements. The seismic design criteria and quality group classification of the GWMS are discussed in Chapter 3, Section 3.2.

The GWMS serves no safety function and has no safety design basis. The major components, piping, and valves that contain radioactive gases, up to and including the isolation valves, are designed to quality group D requirements as discussed in Section 3.2. Key equipment is designed with redundant components so that the failure or maintenance of any frequently used component does not impair system operation. Table 11.3-3 provides typical failure scenarios.

11.3.1.4 Method of Treatment

The GWMS uses four gas surge tanks to provide temporary storage of radioactive gas for the decay of the short-lived isotopes that contribute to the majority of radioactivity. It also includes four charcoal beds for the removal of radioactive gases (iodine, xenon, and krypton) for decay before some of the gases are released into the environment. Iodides, however, are appreciably adsorbed when the gas stream is passed through these beds. The gas surge tanks and charcoal beds provide adequate delay and decay time (up to 45 days) before the gas effluent is routed to the discharge structure.

Streams in the GWMS are monitored for both hydrogen and oxygen content so that a flammable mixture does not accumulate. An explosive mixture of hydrogen and oxygen in the GWMS is prevented by maintaining gas concentration: either a hydrogen concentration below 4% by volume or an oxygen concentration below 4% by volume. The GWMS provides sufficient dilution of nitrogen gas with the waste gas to maintain the hydrogen concentration below 4% by volume before discharging the processed gas to the environment. To dilute this gas further, it is mixed with the A/B ventilation flow before it is discharged to the environment. This feature complies with 10 CFR 50, Appendix A, GDC 3 (Ref. 11.3-7) and the guidance of RG 1.189 (Ref. 11.3-8).

The design parameters for the GWMS are listed in Table 11.3-1 and 11.3-2. The GWMS has the capability to process gases associated with the design basis source term.

The GWMS is designed so that releases of radioactive gases are below the concentration limits of 10 CFR 20 (Ref. 11.3-4). The GWMS design allows technical specifications for the release of gaseous effluents to be met and to keep offsite doses to the public within the specified limits.

The US-APWR annual average airborne releases of radionuclides from the plant are determined using the PWR-GALE Code, NUREG-0017 (Ref. 11.3-1), and design basis source term presented in Section 11.1. The expected annual quantities of radioactive material (by radionuclide) released, averaged over the 60-year life of the plant, and the expected doses to individuals at, or beyond the site boundary, are calculated in accordance with the guidance provided in NUREG-0017 (Ref. 11.3-1). The principal parameters used in calculating the annual releases of radioactive materials in gaseous effluents using this guidance are provided in Tables 11.3-5 through 11.3-7.

The GWMS uses equipment that is commonly used in the nuclear power industry. Their performances are proven and documented. The equipment is sized to process waste

gases using design source term and design conditions that bound normal operation including AOOs. The equipment is also housed in the A/B with sufficient shielding such that the average annual dose at the site boundary from direct radiation from the gaseous sources does not exceed the limits of 10 CFR 50, Appendix I (Ref. 11.3-3). Charcoal beds significantly remove and reduce the fraction of radioactive iodine in the effluent stream. Noble gases can be stored in the gas surge tank or HTs to allow decay prior to release.

GWMS equipment is designed, located, and shielded to comply with the guidance of RG 8.8 (Ref. 11.3-9), thus maintaining occupational doses ALARA.

The GWMS includes radiation monitoring to continuously measure the radioactivity in the effluent stream prior to release into the environment to comply with the requirements of GDC 60 and 64. Additional and redundant radiation monitors are provided in the vent stack to verify the radiation level. Upon detection of radiation levels above the setpoint, the monitor activates an alarm and sends signals to close the GWMS discharge valves.

The GWMS is designed so that interconnection between plant systems precludes the contamination of non-radioactive systems and uncontrolled releases of radioactivity to the environment to meet the requirements of IE bulletin 80-10 (Ref. 11.3-27). At least two isolation valves are located between the clean and contaminated systems to minimize the potential for contamination of clean systems. This feature meets the requirements of 10 CFR 20.1406 (Ref. 11.3-10).

The design standards and materials for all GWMS structures, systems, and components (SSCs) are consistent with the specifications provided in RG 1.143 (Ref. 11.3-2). A list of the major equipment for the GWMS, including the number of units supplied, rates, process conditions, materials, and relevant design codes, is provided in Tables 11.3-2 and Figure 11.2-1 (sheet 3 of 3).

11.3.1.5 Site-Specific Cost-Benefit Analysis

The GWMS is designed to be used for any site. This report provides the justification that the design is flexible so that site-specific requirements such as preference and upgrade of technologies, degree of automated operation, and radioactive waste storage, can be incorporated into the design with minor modifications.

RG1.110 provides compliance with 10 CFR 50, Appendix I (Ref. 11.3-3) numerical guidelines for offsite radiation doses as a result of gaseous or airborne radioactive effluents during normal operations, including AOOs. The cost-benefit numerical analysis as required by 10 CFR 50, Appendix I (Ref. 11.3-3), Section II, Paragraph D demonstrates that the addition of items of reasonably demonstrated technology is not favorable or cost beneficial.

The COL Applicant is to perform a site-specific cost-benefit analysis to demonstrate compliance with the regulatory requirements.

11.3.1.6 Mobile or Temporary Equipment

The GWMS is designed with permanently installed equipment. The GWMS does not include the use of mobile or temporary equipment.

11.3.1.7 Seismic Design

GWMS equipment and piping are classified as non-seismic. However, the A/B is designed to seismic Class II. The SSCs classifications for the GWMS are discussed in Chapter 3, Section 3.2.

11.3.2 System Description

The GWMS consists of two gas compressors, a gas dryer skid, four charcoal delay beds, four gas surge tanks, two hydrogen analyzer units (each with one hydrogen and one oxygen analyzer), and an oxygen analyzer unit containing dual oxygen analyzers. One of the two gas compressors operates continuously to draw gaseous waste from the HTs and the CVDT, and directs the gaseous waste into the gas surge tank for radioactive decay of short-half life isotopes. Upon the completion of decay, or at the operator's discretion, the gaseous waste is processed through the dryer, the charcoal bed adsorbers, and sent to the vent stack for release. When the gas pressure in the VCT reaches the predetermined setpoint, the pressure control valve opens and the gas is released into the gas dryer and charcoal bed adsorbers for treatment and release. A recycle line to the suction side of the gas compressors is provided to direct the gaseous waste from the VCT to go to the gas surge tanks.

The process design of the GWMS is presented in Figures 11.3-1 (Sheet 1 and 2 of 3). The equipment layout is in Figure 11.5-2a through 11.5-2k. Piping and instrumentation diagrams (P&IDs) are to be included in the combined license application.

During normal operation, radioactive isotopes including xenon, krypton, and iodine are generated as fission products. A portion of these nuclides are present in the reactor coolant due to fuel defects. These nuclides are stripped out of the coolant in the VCT and the HTs into the cover gas and form the input to the GWMS.

The main sources of plant radioactive gaseous inputs to the GWMS are the waste gases from the VCT, the CVDT, and the HTs. Since nitrogen is used as a cover gas for the HTs, the gas, after decay in the gas surge tank, is returned back to the HT for reuse. Otherwise, the nitrogen gas is treated and discharged. Hence, the majority of the waste gas entering the GWMS during normal operation is composed of nitrogen cover gas, a small amount of radioactive gaseous isotopes of krypton and xenon, and to a lesser extent, hydrogen and oxygen.

The charcoal bed adsorbers are used to control and minimize the release of radionuclides into the environment by delaying the release of the radioactive noble gases, including krypton and xenon. The charcoal bed adsorbers contain activated charcoal that has been used extensively to remove radioactive iodine and other noble gases before the gaseous waste is routed to the discharge structure. The charcoal bed adsorbers provide up to 45 days of delay time for these gases at the design flow conditions.

Any liquid generated from the operation of the GWMS is collected and routed to the LWMS for further processing. The equipment drainage from the GWMS is routed to the WHTs in the LWMS for further processing.

Some hydrogen and oxygen are generated from the hydrolysis and radiolysis of the coolant-water. At sufficiently high concentrations, these gases can form flammable and explosive mixtures. Hence, streams in the GWMS are monitored for both hydrogen and oxygen content so that a flammable limit will not be reached. The GWMS provides sufficient dilution of nitrogen gas to maintain a hydrogen concentration below 4% by volume and an oxygen concentration below 4% by volume before the gaseous waste is sent to the vent stack. This gas is further diluted with the A/B ventilation flow in the vent stack before it is discharged to the atmosphere.

Initially, the waste gas from the HTs and the CVDT is compressed, cooled, demoisturized, and then routed to be released to the atmosphere via the vent stack. Component cooling water (CCW) is supplied to the gas cooler located downstream from the compressors and is designed to cool the gaseous waste stream to separate the moisture from the gas stream in the moisture separator. The moisture separator has level control and automatically activates the valve to drain the moisture into the LWMS WHTs. The gaseous waste stream is then routed to the molecular sieve tank to remove the remaining moisture with desiccant before the gas is forwarded to the gas surge tank for decay and later on to the charcoal bed adsorbers for removal of the radioactive nuclide gases.

After nuclide removal, the gaseous stream is routed to the vent stack for discharge. The vent stack is located along side of the containment and the discharge point is above the top of the containment. Radiation monitors are provided before the discharge valve so that the release limits are not exceeded. The discharge valves remain open when the radiation setpoint is not exceeded. The gaseous effluent is further diluted with the HVAC ventilation flow in the vent stack. Lack of ventilation flow closes the discharge valve. Two additional normal-range radiation monitors are provided to monitor the releases in the vent stack. Only one of the two monitors is required for normal operation. The other one acts as a standby. Two more radiation monitors, one mid-range and one high-range, are provided to operate during post-accident conditions. All these monitors send data to a processor which provides release data for plant operation and activates valve closure if the setpoints are exceeded. These monitors are used to meet the dose objectives of 10 CFR 50, Appendix I (Ref. 11.3-3) and the dose limits to the public of 10 CFR 20 (Ref. 11.3-4).

The vent stack is the only GWMS release point for both the gaseous system and the HVAC systems associated with the R/B, A/B and the Access Building (AC/B). The release point of the vent stack is circular shape and its inner diameter is approximately 7.3 ft. The maximum effluent flow rate is approximately 250,000 cfm. Then, corresponding effluent exit velocity is approximately 6,000 fpm. The effluent temperature during normal operation is near the ambient temperature inside building. The maximum effluent temperature is approximately 158 °F at accident condition. The height of the release point is same height of the top of the containment and the COL Applicant is responsible to include the site-specific vent stack design.

11.3.2.1 Component Description

This section provides a general description of the key GWMS equipment. Specific component design parameters are summarized in Table 11.3-2. Design codes, standards, and materials for construction of these components are summarized in Table 11.3-11, and are consistent with RG 1.143 (Ref. 11.3-2). The Equipment Class 6 components are designed in compliance with applicable codes and standards, and guidelines provided in RG 1.143 (Ref. 11.3-2).

11.3.2.1.1 Waste Gas Compressors

There are two waste gas compressors. The waste gas compressors continuously draw gases from various systems in the plant and compress the gases into the gas surge tanks. One compressor is used for normal operation and is capable of handling the cover gas from a HT. A second compressor is standing by as backup. The waste gas compressors are water sealed centrifugal units and contain gas coolers and moisture separators. The moisture separator level is equipped with a level control valve. Primary makeup water (PMW) is used as seal water during normal operation. Each gas compressor is sized to handle 100% of the rated load during normal operation including AOOs.

11.3.2.1.2 Gas Surge Tanks

Four gas surge tanks are provided. One is normally set up to receive compressed gases from the waste gas compressor. A second gas surge tank is available for discharge. A third gas surge tank is primarily used for temporary storage of cover gas, and the fourth gas surge tank is a backup. The four gas surge tanks are interconnected and any of the four can be used for any of these functions. In addition, each gas surge tank is independent and functions as a redundant unit. In the unlikely event that one is not functional due to a gas explosion, the others remain unaffected.

Each gas surge tank is provided with pressure control valves to automatically isolate the tank when it reaches the predetermined setpoint. The high-pressure signal provides alarms both in the radwaste control room and the MCR.

Each gas surge tank is sized to retain waste gases discharged from the waste gas compressor during normal operation, including AOOs, and plant shutdown conditions. The gas surge tanks are vertical cylindrical tanks and are made of carbon steel.

11.3.2.1.3 Oxygen Analyzer

One non-sparking oxygen analyzer unit containing dual analyzers and monitors is provided downstream of the waste gas dryer to continuously monitor the concentration of oxygen upstream of the charcoal beds. The oxygen content of the waste stream is controlled to preclude the formation of a flammable mixture. The oxygen gas analyzer skid will have automatic control features to automatically isolate the feed to the charcoal adsorbers by closing the valves to the waste gas dryer and annunciate alarms both locally and in the MCR for operator actions.

11.3.2.1.4 Hydrogen/Oxygen Analyzers

Two non-sparking hydrogen and oxygen gas analyzers monitor the concentrations of hydrogen and oxygen in GWMS components. During normal operation, one is in service to measure the oxygen and hydrogen concentration on a periodic basis and the second one is used as a backup. The second gas analyzer provides compliance with the redundancy guidance of NUREG-0800 (Ref. 11.3-12), and ANSI/ANS-55.4, Section 4.7 (Ref. 11.3-6). The hydrogen and oxygen analyzers do not operate continuously as does the oxygen analyzer. These instruments are used intermittently, mainly during the discharge mode of operation.

During normal plant operation, hydrogen concentration in the gas stream does not exceed 2% by volume on a moisture-free basis at the defined air flow range, as shown in Table 11.3-1. The 2% limit is set administratively so that the operator has sufficient time to investigate the cause and take corrective actions before the concentration reaches the 4% limit. The 2% limit is discussed in RG 1.189 (Ref. 11.3-8).

During startup or other reduced power operations, hydrogen concentration in the gaseous stream is not likely to come close to 2% due to the lower power operation and reduced radiolysis. However, the administrative limit is still set at 2% to comply with RG 1.189 so that the operator has sufficient time to take corrective actions before the concentration reaches the 4% limit.

In the unlikely case that the oxygen concentration reaches 4%, automatic control features are initiated at this “high-high alarm” setting. When the high-high alarm occurs, the sources of the gas to the charcoal bed are isolated by closing the valves. These valves fail close. Under these conditions the gas analyzers will annunciate alarms both locally and in the main control room. The waste gas analyzer skids will have automatic control features to automatically isolate the feed to the charcoal adsorbers by closing the feed valves to the waste gas dryer located upstream of charcoal adsorber, and annunciate alarms both locally and in the MCR for operator actions.

11.3.2.1.5 Waste Gas Dryer

The waste gas dryer skid consists of four major components: two gas coolers, one moisture separator tank, three molecular sieve tanks, and three blower fans. The purpose of the waste gas dryer skid is to remove moisture from the effluent and protect the charcoal bed adsorbers. The redundancy provided on this skid allows the operators to cycle between the molecular sieve tanks when one becomes saturated with moisture.

Each gas cooler and molecular sieve tank is sized to handle 100% of the rated load during normal operation, including AOOs. A gas sample tap is provided downstream of the waste gas dryer skid to permit gas sampling. The following provides detailed information on each subcomponent.

11.3.2.1.5.1 Waste Gas Coolers

The waste gas coolers lower the temperature of gases exiting the dryer, allowing entrained moisture to condense before the gases enter the moisture separator tank. Only one of the two waste gas coolers is in service at any given time. The second waste gas

cooler serves as a backup. The component cooling water system (CCWS) provides the cooling water required for the waste gas cooler heat exchangers.

11.3.2.1.5.2 Moisture Separator

The moisture separator tank collects the condensed moisture in the gas and routes the collected water to the LWMS. The water seal level in the moisture separator is controlled by a level transmitter and a level control valve. PMW is used during the initial startup and normal operation to maintain the water seal. The level transmitter also activates an alarm in the radwaste control room when the level is too high.

11.3.2.1.5.3 Molecular Sieve Tank

The purpose of the molecular sieve tank is to remove the remaining moisture in the gas stream before it reaches the charcoal beds. There are three molecular sieve tanks on the skid, and each tank is filled with desiccant that captures moisture when the gas is processed through the tank. One molecular sieve tank is required to be in service at any one time to support the system's needs. The second tank serves as a backup while the third is in regeneration and cooling mode. The external electric heater is not used during normal operation, but is used during the regeneration mode to heat the moisture trapped in the tank. A small flow of nitrogen is used as a motive force to remove any moisture trapped in the desiccant (drying agent). During the regeneration mode, the purged gas is routed back to the waste gas cooler to condense the moisture in the gas. Nitrogen gas also is used for purging the gas in these tanks when maintenance is required.

11.3.2.1.5.4 Blower Fans

Each of the three molecular sieve tanks is equipped with a single fan for cooling the exterior of the tank surface when the regeneration mode is complete. Using the fan shortens the cool-down period so that the molecular sieve tank can quickly be returned to service.

11.3.2.1.6 Charcoal Adsorbers

Four charcoal bed adsorbers are provided and arranged in two parallel trains. Each train has two charcoal bed adsorbers in series. During normal operation, both trains are in service and arranged in series. If one adsorber train is not available, i.e., saturated with moisture and/or requires maintenance, the train is taken out of service for a short period until the charcoal is replaced and the train is returned back to service. The effluent nuclide activities are also monitored by the radiation instrument at the discharge side of the adsorbers. If the activity exceeds the discharge setpoint, the gas flow is diverted to the gas surge tank and is reprocessed through the charcoal beds. The discharge can be temporarily suspended until the radiation level is below the discharge setpoint or until the out-of-service train is returned to service.

The dynamic adsorption of krypton and xenon isotopes on charcoal delay beds is shown in Table 11.3-1. The volume of charcoal is listed in Table 11.3-2.

The piping allows for the isolation and bypass of one train of charcoal bed adsorbers should it become saturated with moisture. The bypass valves are sequenced so that the charcoal bed adsorbers can be bypassed using a one-step control.

The waste gas compressors continuously keep the GWMS piping system pressurized, preventing any airborne contaminants from entering into the system. Therefore, airborne contaminants have no effect on the charcoal adsorbers' life expectancy. The charcoal beds are designed to last several years before requiring maintenance or a replacement.

A nitrogen purge line is provided for the gas surge tanks, molecular sieve tanks, hydrogen and oxygen analyzers, oxygen analyzer, compressors, and charcoal bed vessels. This gas line allows each vessel to be purged with nitrogen when needed, such as for regeneration after possible moisture contamination. A nitrogen purge is also used to dilute potentially explosive gas mixtures and to remove air/oxygen from a system after maintenance. To help facilitate compliance with 10 CFR 20.1406 (Ref. 11.3-10), double isolation valves are provided at each nitrogen interface point so that the system is not contaminated. Isolation valves in the nitrogen purge lines, as well as the gas supply connection, can be accessed from outside the charcoal vault.

11.3.2.2 Design Features

The GWMS is designed to be accessible for maintenance as follows:

- Redundant components (such as compressors, molecular sieve tanks, gas coolers, and gas analyzers) are housed in separately shielded cubicles for maintenance on one train while the other one is in service.
- Valves are installed outside of the equipment in a shielded valve corridor that is accessible for maintenance.
- Valves, such as diaphragm valves, have stem seals which have low leakage and are easy to maintain. Their use results in lower maintenance and less radiation dose to maintenance personnel.

The GWMS is designed, constructed, and tested to be as leak-tight as practical.

In order to reduce/minimize maintenance and corresponding personnel dose while performing maintenance, the following design features are implemented:

- Components are installed in separately shielded cells to minimize dose while performing maintenance.
- Pumps, compressors, and valves are in separate galleries and shielded from the process equipment. Valves have extended valve stems for operator actions.
- Only proven and qualified equipment from the nuclear industry is used.
- Steel piping with butt welded construction is used to minimize crud traps. Only qualified welders are employed.

- Cubicles containing radioactive liquid are steel-lined or lined with an epoxy coating to minimize the potential for contamination to the groundwater system and to ease maintenance and decontamination.
- Drains and overflows are routed directly to sumps to minimize the spread of radioactive fluid.
- Non-radioactive auxiliary subsystems are isolated from the radioactive process streams.

In order to reduce leakage and releases of radioactive material, the following design features are included:

- Equipment, piping, and instruments are subject to stricter leak rate testing and inspections
- Sumps are equipped with level switches that activate alarms for prompt operator action to minimize the spread of contamination

11.3.3 Radioactive Effluent Releases

11.3.3.1 Radioactive Effluent Releases and Dose Calculation in Normal Operation

The GWMS treats and releases radioactive gaseous waste generated from normal operation, including AOOs. Gaseous release data (isotope and activity) are presented in Tables 11.3-5 through 11.3-7. There are no liquid or solid waste releases from the GWMS.

The GWMS is designed to treat potentially radioactive gas to meet the concentration and dose limits of 10 CFR 20 (Ref. 11.3-4), the dose limits of 10 CFR 50, Appendix I (Ref. 11.3-3), and GDC 64. The main sources of plant radioactive gaseous inputs to the GWMS are the waste gases from the VCT, CVDT, boric acid evaporator, and HTs. Their flow rates are presented in Figure 11.3-1 (Sheet 3 of 3).

The treated gaseous waste is further diluted by HVAC ventilation flow before the gases are released from the vent stack. The vent stack runs alongside the containment with the release point above the top of the containment. The design information of the vent stack and release point is described in Section 11.3.2.

The release rates and isotopic compositions are calculated using the PWR-GALE Code, NUREG-0017 (Ref. 11.3-1). The version of the code is a proprietary modified version of the NRC PWR-GALE code reflecting the design specifics of US-APWR design (Ref. 11.3-28). Other parameters for the PWR-GALE Code calculation are listed in Section 11.1 and Section 11.2.3. The results of the calculation are tabulated in Tables 11.3-5 through 11.3-7, and are compared to the concentration limits of 10 CFR 20 (Ref. 11.3-4). The comparison indicates that the overall expected release is a small fraction (0.9%) of the release limit and the maximum release about 91% of the release limit.

The maximum individual doses at the exclusion area boundary (EAB) are calculated using the GASPAR II Code (Ref. 11.3-17). The parameters for the GASPAR II Code

calculation are tabulated in Table 11.3-8. X/Q value at EAB is assumed 1.6E-05 (s/m^3) for the calculation of gamma dose in air, beta dose in air, dose to total body, dose from ground, and dose due to inhalation. X/Q value at the off site is assumed 5.0E-06 (s/m^3) for the calculation of dose from food pathway. Calculated doses are tabulated in Table 11.3-9. The gamma dose in air is 2.10E-01 mrad/yr and the beta dose in air is 1.62E+00 mrad/yr, which are less than the criteria of 10 mrad/yr and 20 mrad/yr, respectively, that are required in 10 CFR 50, Appendix I (Ref. 11.3-3). All of the dose to total body, the dose to skin, and the dose to organ are less than the criteria in 10 CFR 50, Appendix I (Ref. 11.3-3): 1.34E-01 mrem/yr for 5 mrem/yr, 1.26E+00 mrem/yr for 15 mrem/yr, and 1.02E+01 mrem/yr [child's bone] for 15 mrem/yr, respectively.

The COL Applicant is to calculate doses to members of the public following the guidance of RG 1.109(Ref. 11.3-19) and RG 1.111(Ref. 11.3-22), and compare the doses due to the gaseous effluents with the numerical design objectives of 10 CFR 50, Appendix I (Ref. 11.3-3) and compliance requirements of 10 CFR 20.1302(Ref. 11.3-24), 40 CFR 190(Ref. 11.3-25).

11.3.3.2 Radioactive Effluent Releases and Dose Calculation due to Gaseous Waste Management System Leak or Failure

11.3.3.2.1 Waste gas surge tank leak

A waste gas surge tank leak is considered as an event that causes the maximum dose to the environment in case of a gaseous waste management system leak or failure.

The reactor coolant activity for the noble gases is based on a 300 μCi/g dose equivalent Xe-133 as stated in the technical specifications. All the noble gases in the reactor coolant are assumed to be transferred into the waste gas surge tank one day after the reactor shut down for a dose evaluation of a waste gas surge tank leak. The radioactive decay during this period is taken into account. The noble gas activity in the waste gas surge tank is calculated from the following equation.

$$A_i = \frac{C_i \cdot m \cdot \exp(-\lambda_i \cdot t)}{N} \qquad \text{Eq. 11.3-1}$$

where:

A_i = Activity of noble gas nuclide i in the waste gas surge tank (Ci)

C_i = Reactor coolant activity of nuclide i (μCi/g)

m = Reactor coolant mass (t)

λ_i = Decay constant of nuclide i (s^{-1})

t = Transfer time of all the noble gases from the reactor coolant to waste gas surge tank (s)

N = Number of gas surge tanks

All the gases released into the auxiliary building are assumed to be released into the atmosphere.

Dose to total body due to waste gas surge tank leak is calculated using the equation based on BTP 11-5(Ref. 11.3-18) shown below.

$$D = \sum_i \frac{K_i \cdot A_i \cdot (X/Q) \cdot (1E+12pCi/Ci)}{3.15E+07s/yr} \qquad \text{Eq. 11.3-2}$$

where:

D = Dose to total body (mrem)

A_i = Activity of noble gas nuclide i determined in Eq. 11.3-1(Ci/event)

K_i = Dose factor of nuclide i for total body given as DFBi in Table B-1 of Regulatory Guide 1.109(mrem-m^3/pCi/yr)

(X/Q) = The short-tem atmospheric dispersion factor at EAB specified in Chapter 2, Subsection 2.3.4(s/m^3)

The parameters for calculation and results are tabulated in Table 11.3-4. The dose at EAB is 46 mrem in case of a waste gas surge tank leak, which is less than the criterion of 100 mrem required in BTP 11-5 (Ref. 11.3-18).

11.3.3.2.2 Charcoal bed leak

The released amount of radioactive noble gases in the charcoal bed leak is calculated from the following equations.

$$Q_i = (Q_{ni} + Q_{fi}) \cdot \frac{A_i}{A_i'} \qquad \text{Eq. 11.3-3}$$

where:

Q_i = Annual effluent of noble gas nuclide i (Ci/yr)

Q_{ni} = Annual effluent of noble gas nuclide i during normal operation (Ci/yr)

Q_{fi} = Annual effluent of noble gas nuclide i without the charcoal bed (Ci/yr) (taking into account 30 minutes radioactive decay)

A_i = Reactor coolant activity for noble gas nuclide i that is equal to 300 μCi/g dose equivalent Xe-133 as stated in the technical specifications (μCi/g)

A_i' = Realistic reactor coolant activity for noble gas nuclide i that is calculated by the PWR-GALE Code (μCi/g)

Dose to total body due to charcoal bed leak is calculated using the equation based on BTP 11-5(Ref. 11.3-18) shown below.

$$D = \sum_i K_i \cdot Q_i \cdot (X/Q) \cdot (1E+12 pCi/Ci) \cdot (7.25E-12 yr^2/event-s) \quad \text{Eq. 11.3-4}$$

where:

D = Dose to total body (mrem)

Q_i = Annual effluent of noble gas nuclide i (Ci/yr)

K_i = Dose factor of nuclide i for total body given as DFBi in Table B-1 of Regulatory Guide 1.109(mrem-m3/pCi/yr)

(X/Q) = The short-tem atmospheric dispersion factor at EAB specified in Chapter 2, Subsection 2.3.4(s/m^3)

The parameters for the calculation and the results are tabulated in Table 11.3-4. The dose at EAB is 2 mrem in case of a charcoal bed leak, which is lower than the dose in case of a waste gas surge tank leak and is less than the criterion of 100 mrem specified in BTP 11-5 (Ref. 11.3-18).

11.3.3.3 Offsite Dose Calculation Manual

The offsite dose calculation manual contains site-specific requirements. To assist the preparation of DCD and COLA, the applicant will use the NEI's generic templates for the offsite dose calculation manual, including radiological effluent technical specifications and the radiological effluent monitoring program. These templates were issued to Nuclear Regulatory Commission (NRC) for evaluation.

11.3.4 Ventilation System

The ventilation system is designed in accordance with the requirements of Guidance of RG 1.140 (Ref. 11.3-16). and is described in Chapter 9, Section 9.4. Chapter 12, Section 12.3 describes the radiation activity levels in the ventilation system.

The HVAC ventilation flow provides dilution for the GWMS release in the vent stack. The discharge isolation valve, located downstream of the discharge radiation monitor, closes on a low ventilation system exhaust flow rate to minimize the potential for the release of the treated gaseous waste alone and the accumulation of hydrogen in the vent stack.

Equipment cubicles are ventilated to reduce the accumulation of airborne radioactive materials transported to the atmosphere from equipment in a radiological controlled area (RCA).

11.3.5 Testing and Inspection Requirements

The GWMS does not have a safety-related function and, therefore, in-service inspection of the components is not required.

Table 11.3-11 describes the preoperational and startup testing for both components and piping along with the verification of flow and pressure in major components.

11.3.5.1 Instrumentation Testing Requirements

Periodic tests and calibrations are performed during normal operation on the analyzers and instrumentation channels. These tests and calibrations provide confidence that projected gaseous effluent releases are ALARA, and that the explosive gas mixture concentration is below the flammability limit.

The discharge isolation valves are designed to close upon the receipt of a high radiation signal. This function can be verified by simulating the high radiation signal to the discharge valves so that the discharge valve closes automatically and flow is switched to the compressor suction. Simulating the high radiation alarm signal confirms the proper operation of the discharge valve closure.

11.3.5.2 Preoperational Inspection

The effectiveness and performance of charcoal beds are impacted by the moisture and chemical contents in the gas. The dryness and effectiveness of the charcoal beds need periodic inspection. The inspection is conducted based on the manufacturer's recommended practice.

11.3.6 Instrumentation Requirements

The GWMS process equipment is controlled and monitored from the radwaste control room. In order to facilitate maintenance, calibration, and operation activities, instrument components are installed in accessible areas. The only instruments allowed behind shield walls are sensing elements. A list of instruments with their indications and alarms is given in Table 11.3-10.

The temperature of the gaseous waste stream is measured in the waste gas dryer skid and at various locations in the system to determine that the system is operating properly. The gaseous waste stream dew point instrument is located downstream of the gas dryer skid so that the stream is cooled sufficiently and that all undesired moisture has been removed. In case of an abnormal condition, both the temperature and the dew point sensors activate an alarm in the radwaste control room for operator actions.

11.3.7 Combined License Information

COL 11.3(1) Deleted

COL 11.3(2) Deleted

COL 11.3(3) The COL Applicant is to provide a discussion of the onsite vent stack released point height.

COL 11.3(4) Deleted

COL 11.3(5) Deleted

COL 11.3(6) The COL Applicant is to calculate doses to members of the public following the guidance of RG 1.109(Ref. 11.3-19) and RG 1.111(Ref. 11.3-22), and compare the doses due to the gaseous effluents with the numerical design objectives of 10 CFR 50, Appendix I (Ref. 11.3-3) and compliance with requirements of 10 CFR 20.1302(Ref. 11.3-24), 40 CFR 190(Ref. 11.3-25).

COL 11.3(7) Deleted

COL 11.3(8) The COL Applicant is to perform a site-specific cost benefit analysis to demonstrate compliance with the regulatory requirements.

COL 11.3(9) The COL Applicant is to provide piping and instrumentation diagrams (P&IDs).

11.3.8 References

11.3-1 Calculation of Releases of Radioactive Materials in Gaseous and Liquid Effluents from Pressurized Water Reactors (PWR-GALE Code), NUREG-0017, Rev. 1, April 1985.

11.3-2 Design Guidance for Radioactive Waste Management Systems, Structures, and Components Installed in Light-Water-Cooled Nuclear Power Plants, Regulatory Guide 1.143, Rev. 2, November 2001.

11.3-3 Numerical Guides for Design Objectives and Limiting Conditions for Operation to Meet the Criterion "As Low as Reasonably Achievable" for Radioactive Material in Light-Water-Cooled Nuclear Power Reactor Effluents, NRC regulations Title 10, Code of Federal Regulations, 10 CFR Part 50, Appendix I.

11.3-4 Standards for Protection Against Radiation, NRC Regulations Title 10, Code of Federal Regulations, 10 CFR Part 20, December 2002.

11.3-5 General Design Criteria for Nuclear Power Plants, NRC Regulations Title 10, Code of Federal Regulations, 10 CFR Part 50, Appendix A, GDC 64.

11.3-6 American National Standard for Gaseous Radioactive Waste Processing System. American National Standards Institute, ANSI 55.4, 1993 Edition.

11.3-7 Fire Protection, General Design Criteria for Nuclear Power Plants, NRC Regulations Title 10, Code of Federal Regulations, 10 CFR Part 50, Appendix A, GDC 3.

11.3-8 Fire Protection for Operating Nuclear Power Plants, Regulatory Guide 1.189, Rev. 0, U.S. Nuclear Regulatory Commission, Washington, DC, April 2001.

11.3-9 Information Relevant to Ensuring that Occupational Radiation Exposures at Nuclear Power Stations Will Be as Low as Is Reasonably Achievable. Regulatory Guide 8.8, Rev. 3, U.S. Nuclear Regulatory Commission, Washington, DC, June 1978.

11.3-10 Minimization of Contamination, NRC Regulations Title 10, Code of Federal Regulations, 10 CFR Part 20.1406.

11.3-11 Deleted

11.3-12 U.S. Nuclear Regulatory Commission, Standard Review Plan for the Review of Safety Analysis Reports for Nuclear Power Plants. NUREG-0800.

11.3-13 Measuring, Evaluating, and Reporting Radioactivity in Solid Wastes and Releases of Radioactive Materials in Liquid and Gaseous Effluents from Light-Water-Cooled Nuclear Power Plants, Regulatory Guide 1.21, Rev. 1, June 1974.

11.3-14 Quality Assurance for Radiological Monitoring Programs (Inception through Normal Operations to License Termination)—Effluent Streams and the Environment, Regulatory Guide 4.15, Rev. 2, July 2007.

11.3-15 Pressure Vessels, ASME Boiler and Pressure Vessel Code Division 1, Section VIII.

11.3-16 Design, Inspection, and Testing Criteria for Air Filtration and Adsorption Units of Normal Atmosphere Cleanup Systems in Light-Water-Cooled Nuclear Power Plants, Regulatory Guide 1.140 , Revision 2, June 2001.

11.3-17 U.S. Nuclear Regulatory Commission, GASPAR II Technical Reference and User Guide, NUREG/CR-4653, Washington, DC, March 1987.

11.3-18 U.S. Nuclear Regulatory Commission, Postulated Radioactive Releases due to a Waste Gas System Leak or Failure. Branch Technical Position 11-5, NUREG-0800.

11.3-19 Calculation of Annual Doses to Man from Routine Releases of Reactor Effluents for the Purpose of Evaluating Compliance with 10 CFR Part 50, Appendix I, Regulatory Guide 1.109, Rev. 1, October 1977.

11.3-20 Offsite Dose Calculation Manual Guidance: Standard Radiological Effluent Controls for Pressurized Water Reactors. [This NUREG includes Generic Letter 89-01.], NUREG-1301.

11.3-21 U.S. Nuclear Regulatory Commission, Preparation of Radiological Effluent Technical Specifications for Nuclear Power Plants. NUREG-0133, Washington, DC.

11.3-22 Methods for Estimating Atmospheric Transport and Dispersion of Gaseous Effluents in Routine Releases from Light-Water-Cooled Reactors. Regulatory Guide 1.111, Rev. 1,July 1977.

11.3-23 Estimating Aquatic Dispersion of Effluents from Accidental and Routine Reactor Releases for the Purpose of Implementing Appendix I. Regulatory Guide 1.113, Rev. 1, April 1977.

11.3-24 Compliance with dose limits for individual members of the public. NRC Regulations Title 10, Code of Federal Regulations, 10 CFR Part 20.1302.

11.3-25 U.S. Environmental Protection Agency, "Environmental Radiation Protection Standards for Nuclear Power Operations." Protection of Environment. Title 40, Code of Federal Regulations, Part 190, Washington, DC.

11.3-26 Cost-Benefit Analysis for Radwaste Systems for Light-Water-Cooled Nuclear Power Reactors. Regulatory Guide 1.110, March 1976.

11.3-27 Contamination of Nonradioactive System and Resulting Potential for Unmonitored, Uncontrolled Release of Radioactivity to Environment, U.S. Nuclear Regulatory Commission, IE Bulletin No. 80-10, May 6, 1980.

11.3-28 Calculation Methodology for Radiological Consequences in Normal Operation and Tank Failure Analysis, MUAP-10019-P Rev. 1 (Proprietary) and MUAP-10019-NP Rev. 1 (Non-proprietary), March 2011.

Table 11.3-1 System Design Parameters

Design Parameter	Design Value
Xenon delay	45 days
Dynamic adsorption coefficient K_d for Xe	500 cc[normal] /g
Dynamic adsorption coefficient K_d for Kr	30 cc[normal] /g
Maximum gaseous waste stream temp (°F)	175
Charcoal temperature (°F)	50 to 104
Maximum cooler temp in the Dryer Skid (°F)	50 to 104
CCW temperature (°F)	100
Gaseous waste stream temperature (°F)	104
Minimum activated charcoal ignition temperature (°F)	313
Minimum nitrogen supply to molecular sieve tank (Dryer tank) in regeneration mode (scfm)	0.12
Gas flow range (scfm)	0 to 1.2
Charcoal bed vault temperature range (°F)	50 to 104
Charcoal particle size	8 - 16 mesh (USS) with less than 0.5% under 20 mesh
Charcoal moisture content	< 5% by weight
Waste gas compressor influent (psig)	0.5
Waste gas compressor influent flow rate (scfm)	40
Waste gas compressor discharge pressure (psig)	110
Waste gas dryer operating temperature (°F)	104
Waste gas dryer operating pressure (psig)	2.8
Waste gas dryer operating dew point (°F)	-22
Waste gas heater operating temperature (exterior) (°F)	662

Table 11.3-2 GWMS Major Equipment Design Information (Sheet 1 of 2)

Waste Gas Compressor Package	
Number	2
Type:	Shaft sealing, centrifugal
Design pressure (psig)	150
Design temperature (°F)	200
Normal operating pressure (psig)	110
Suction (psig)	0.5
Discharge (psig)	108 to 115
Design flow rate (scfm)	40
Material of construction	Stainless Steel
Oxygen Gas Analyzer Skid	
Number	1 skid (two sensors on one skid)
Design pressure (psig)	150
Design temperature (°F)	200
Design flow rate (scfm)	0.053 (for each sensor)
Oxygen concentration (volume %) (Instrument range= 0% to 5% range)	0 to 2
Hydrogen concentration (volume %)	0 to 100
Waste Gas Analyzer (Hydrogen/Oxygen) Skid	
Number	2
Design pressure (psig)	15
Design temperature (°F)	120
Design flow rate (scfm)	0.053 (for Hydrogen Analyzer) 0.053 (for Oxygen Analyzer)
Oxygen concentration (volume %) (Instrument range= 0% to 5% range)	0 to 2
Hydrogen concentration (volume %) (Instrument range= 0% to 5%, 0% to 50% , 0% to 100% three range)	0 to 100
Waste Gas Surge Tanks	
Number	4
Type	Vertical Cylindrical Tank
Design pressure (psig)	150
Design temperature (°F)	200
Volume (each tank) (ft^3)	1,400
Normal operating pressure (psig)	8.5 to105
Normal operating temperature (°F)	50 to 104
Design flow rate (scfm)	0 to 20
Material of construction	Carbon steel
Waste Gas Dryer (Consists of Gas Cooler, Moisture Separator, & Molecular Sieve Tanks)	
Number	1 Skid
Processing flow rate (scfm)	1.2 (Standard temperature and pressure)
Dew point (°F)	-22

Table 11.3-2 GWMS Major Equipment Design Information (Sheet 2 of 2)

Gas Cooler	
Number	2
Design pressure (psig)	150
Design temperature (°F)	750 (gaseous side) / 200 (cooling water side)
Normal operating pressure (psig)	2.8
Inlet temperature (°F)	50 to 104 -normal mode 662 - regenerate mode
outlet temperature (°F)	50 to 104
Design flow rate (scfm)	1.2
Material of construction	Stainless steel
Moisture Separator Tank	
Number	1
Volume (gal)	1.7
Design pressure (psig)	150
Design temperature (°F)	200
Normal operating pressure (psig)	2.8
Normal operating temperature (°F)	104
Design flow rate (scfm)	1.2
Material of construction	Stainless steel
Molecular Sieve Tank (Dryer Tanks)	
Number	3
Type	Molecular Sieve (Desiccant)
Design pressure (psig)	150
Design temperature (°F)	750
Volume (each tank) (ft^3)	350
Normal operating pressure (psig)	2.8
Normal operating temperature (°F)	50 to 104
Design flow (scfm)	1.2
Target dew point (°F)	-22
Material of construction	Stainless steel
Blower Fan	
Number	3
Design flow（scfm）	353
Charcoal Beds	
Number	4
Design pressure (psig)	150
Design temperature (°F)	200
Normal operating pressure (psig)	2.8
Normal operating temperature (°F)	50 to 104
Design flow rate (scfm)	1.2
Charcoal design quantity (ft^3 /column)	70
Material of construction	Stainless steel
Radiation Monitor	
Number	1
Design pressure (psig)	150
Design temperature (°F)	200
Design flow rate (scfm)	approximately 1.2

Table 11.3-3 Equipment Malfunction Analysis (Sheet 1 of 2)

Equipment Item	Malfunction	Result(s)	Alternate Action
Radiation monitor	Fails to indicate.	Radiation monitor indication will be lost. The discharge valve will close and the system automatically switches to the compressor suction and routes the gas to the gas surge tank.	Manual samples can be taken downstream of the gas surge tank by the oxygen and hydrogen analyzer skids to support automatic function. Gas can be released based on the sample results.
Moisture separator level indication on gas dryer skid	High-level failure causing water level to increase.	The gas dryer will not be able to perform its function and maintain the level/gas flow. The high and low level indication will be lost. The dew point indication downstream of the dryer skid will show excessive moisture.	Operator can manually control the moisture separator level when system is in service.
Moisture separator level indication for the compressor skid	High or low level failure.	Level indication failure will cause compressor to fail. Compressor will lost its sealing capability and will not be able to maintain the pressure.	Operator can manually control the moisture separator level when the system is in service or switch to backup compressor.
Oxygen Analyzer with dual independent channels measuring oxygen concentrations	One channel failure	Operation may continue as the other channel can determine oxygen concentration to support continuous operation. MCR operator is notified for channel failure.	Waste gas analyzers data can be used.
Two separate waste gas analyzers analyzing hydrogen and oxygen concentrations	One waste gas analyzer failure.	Operation may continue as the other waste gas analyzer can determine oxygen and hydrogen concentrations to support continual operation. MCR operator is notified for one analyzer failure; standby analyzer automatically kicks in for analysis.	Oxygen analyzer data can be used.
Charcoal bed	Charcoal bed is exposed to moisture and the dew point indicates high moisture content	The charcoal bed cannot provide the delay function for the Xe, Kr, or other radionuclide.	Bypass the first train of the carbon beds, purge the tanks with N_2 gas to remove moisture, or replace the bed with a fresh charcoal bed if purging does not work.
Gas cooler	CCW cooling loss to the gas dryer skid.	The heat exchanger will not be able to remove the moisture and the dew point downstream will detect excessive moisture content.	CCW cooling needs to be restored or temporary cooling needs to be provided from a different source.
Gas cooler	Corrosion of tubes in the heat exchanger.	CCW water would leak into the process (shell) side and contaminate the system.	The cooler can be isolated and the backup cooler will be placed in service.

Table 11.3-3 Equipment Malfunction Analysis (Sheet 2 of 2)

Equipment Item	Malfunction	Result(s)	Alternate Action
Charcoal bed	Charcoal gets wet.	Dew point indication shows high moisture content. The charcoal performance deteriorates gradually as moisture deposits. Holdup times for Krypton and Xenon would decrease, and plant emissions would increase. Provisions made for drying charcoal as required during annual outage.	One train can be isolated and bypassed. Line up the second train. Purge the 1st train with N_2 gas to remove moisture or replace the bed with fresh charcoal bed.
Instruments	Instrument failure.	Instrumentation sensors can be isolated and repaired or replaced.	All the essential instruments for the hydrogen/oxygen analyzers and oxygen analyzer are redundant.
Gaseous system	Earthquake damage.	Release of radioactivity.	Dose consequences are within the design guidance of Branch Technical Position 11-5.
Gas surge tank	Leak by or leak out.	The room becomes contaminated. Area rad monitors and HVAC discharge radiation monitor actuate alarms in the control room.	Isolate the damaged vessel and use the backup vessel.

Table 11.3-4 Input Parameters and Calculation Results of Radioactive Effluent Releases and Dose due to the Gaseous Waste Management System Leak or Failures (Sheet 1 of 2)

I. Input Parameters for the Waste Gas Surge Tank Leak	
Reactor coolant activity (μ Ci/g)(1)	Kr-85m 8.15E-01 Kr-85 4.22E+01 Kr-87 5.30E-01 Kr-88 1.52E+00 Xe-133 1.43E+02 Xe-135 4.69E+00
Reactor coolant mass (lb)	646,000
Transfer time of all the noble gases from the reactor coolant to the waste gas surge tank (day)	1
Number of waste gas surge tank	4
Noble gas activity in the waste gas surge tank（Ci）	Kr-85m 1.46E+00 Kr-85 3.09E+03 Kr-87 8.09E-05 Kr-88 2.95E-01 Xe-133 9.20E+03 Xe-135 5.52E+01
Dose factor for total body	RG 1.109
X/Q(s/m^3)(2)	5.0E-4
II. Result and Criteria	
Calculated dose (mrem)	46
Dose criteria(mrem)	100

Table 11.3-4 Input Parameters and Calculation Results of Radioactive Effluent Releases and Dose due to the Gaseous Waste Management System Leak or Failures (Sheet 2 of 2)

I. Input Parameters for the Charcoal Bed Leak	
Reactor coolant activity(μ Ci/g)(1)	Kr-85m 8.15E-01 Kr-85 4.22E+01 Kr-87 5.30E-01 Kr-88 1.52E+00 Xe-133 1.43E+02 Xe-135 4.69E+00
Holdup time for Xe (days)(3)	0.02
Holdup time for Kr (days)(3)	0.02
Other parameters	Same as Table 11.2-9
Annual effluent of noble gas (Ci/yr)	Kr-85m 3.58E+03 Kr-85 4.10E+05 Kr-87 1.85E+03 Kr-88 6.25E+03 Xe-133 6.70E+05 Xe-135 2.17E+04
Dose factor for total body	RG 1.109
X/Q(s/m^3)(2)	5.0E-4
II. Result and Criteria	
Calculated dose(mrem)	2
Dose criteria(mrem)	100

Note:
1. Based on a 300 μ Ci/g Dose Equivalent Xe-133 as stated in the technical specifications
2. The short-term X/Q at EAB (See Section 2.3.4)
3. Based on BTP 11-5 (Ref. 11.3-18). Other parameters for GALE code calculation are the same as those described in Table 11.2-9.

Table 11.3-5 Calculated Annual Average Release of Airborne Radionuclides by the PWR-GALE Code, Revision 1 (Ci/yr) (Sheet 1 of 6)

Isotope(1)	Fuel Handling Area(2)	Containment	Auxiliary Building(3)	Turbine Building	Blowdown Vent Off Gas	Condenser Air Ejector Exhaust	Total Releases
I-131	1.50E-04	5.70E-04	3.50E-03	0.00E+00	0.00E+00	0.00E+00	4.20E-03
I-133	2.20E-03	7.40E-03	5.40E-02	0.00E+00	0.00E+00	0.00E+00	6.40E-02

Notes:
1. Appearing 0.00E+00 in the table indicates release is less than 1.0 Ci/y for noble gas, 0.0001 Ci/y for iodine.
2. The fuel handling area is within the reactor building, but is considered separately in this evaluation.
3. Including the reactor building.

Table 11.3-5 Calculated Annual Average Release of Airborne Radionuclides by the PWR-GALE Code, Revision 1 (Ci/yr) (Sheet 2 of 6)

Isotope(1)	Gas Stripping		Containment	Auxiliary Building(2)	Turbine Building	Blowdown Vent Off Gas	Condenser Air Ejector Exhaust	Total Releases
	Shutdown	Continuous						
Kr-85m	0.00E+00	0.00E+00	0.00E+00	0.00E+00	0.00E+00	0.00E+00	0.00E+00	0.00E+00
Kr-85	1.60E+02	1.20E+03	5.00E+00	6.00E+00	0.00E+00	0.00E+00	3.00E+00	1.40E+03
Kr-87	0.00E+00	0.00E+00	0.00E+00	0.00E+00	0.00E+00	0.00E+00	0.00E+00	0.00E+00
Kr-88	0.00E+00	0.00E+00	0.00E+00	0.00E+00	0.00E+00	0.00E+00	0.00E+00	0.00E+00
Xe-131m	2.80E+01	2.00E+02	1.10E+01	1.40E+01	0.00E+00	0.00E+00	7.00E+00	2.60E+02
Xe-133m	0.00E+00	0.00E+00	0.00E+00	2.00E+00	0.00E+00	0.00E+00	0.00E+00	2.00E+00
Xe-133	0.00E+00	0.00E+00	0.00E+00	0.00E+00	0.00E+00	0.00E+00	0.00E+00	0.00E+00
Xe-135m	0.00E+00	0.00E+00	0.00E+00	3.00E+00	0.00E+00	0.00E+00	1.00E+00	4.00E+00
Xe-135	0.00E+00	0.00E+00	0.00E+00	2.00E+00	0.00E+00	0.00E+00	0.00E+00	2.00E+00
Xe-137	0.00E+00	0.00E+00	0.00E+00	0.00E+00	0.00E+00	0.00E+00	4.00E+00	4.00E+00
Xe-138	0.00E+00	0.00E+00	0.00E+00	1.00E+00	0.00E+00	0.00E+00	0.00E+00	1.00E+00
H-3								1.80E+02
C-14								7.30E+00
Ar-41								3.40E+01

Notes:
1. Appearing 0.00E+00 in the table indicates release is less than 1.0 Ci/y for noble gas, 0.0001 Ci/y for iodine.
2. Including the reactor building.

Table 11.3-5 Calculated Annual Average Release of Airborne Radionuclides by the PWR-GALE Code, Revision 1 (Ci/yr) (Sheet 3 of 6)

Isotope(1)	Waste Gas System	Containment	Auxiliary Building(3)	Fuel Handling Area(2)	Total Releases
Cr-51	1.40E-05	9.20E-05	3.20E-04	1.80E-04	6.10E-04
Mn-54	2.10E-06	5.30E-05	7.80E-05	3.00E-04	4.30E-04
Co-57	0.00E+00	8.20E-06	0.00E+00	0.00E+00	8.20E-06
Co-58	8.70E-06	2.50E-04	1.90E-03	2.10E-02	2.30E-02
Co-60	1.40E-05	2.60E-05	5.10E-04	8.20E-03	8.80E-03
Fe-59	1.80E-06	2.70E-05	5.00E-05	0.00E+00	7.90E-05
Sr-89	4.40E-05	1.30E-04	7.50E-04	2.10E-03	3.00E-03
Sr-90	1.70E-05	5.20E-05	2.90E-04	8.00E-04	1.20E-03
Zr-95	4.80E-06	0.00E+00	1.00E-03	3.60E-06	1.00E-03
Nb-95	3.70E-06	1.80E-05	3.00E-05	2.40E-03	2.50E-03
Ru-103	3.20E-06	1.60E-05	2.30E-05	3.80E-05	8.00E-05
Ru-106	2.70E-06	0.00E+00	6.00E-06	6.90E-05	7.80E-05
Sb-125	0.00E+00	0.00E+00	3.90E-06	5.70E-05	6.10E-05
Cs-134	3.30E-05	2.50E-05	5.40E-04	1.70E-03	2.30E-03
Cs-136	5.30E-06	3.20E-05	4.80E-05	0.00E+00	8.50E-05
Cs-137	7.70E-05	5.50E-05	7.20E-04	2.70E-03	3.60E-03
Ba-137m	7.70E-05	5.50E-05	7.20E-04	2.70E-03	3.60E-03
Ba-140	2.30E-05	0.00E+00	4.00E-04	0.00E+00	4.20E-04
Ce-141	2.20E-06	1.30E-05	2.60E-05	4.40E-07	4.20E-05

Notes:
1. Appearing 0.00E+00 in the table indicates release is less than 1.0 Ci/y for noble gas, 0.0001 Ci/y for iodine.
2. The fuel handling area is within the reactor building, but is considered separately in this evaluation.
3. Including the reactor building.

Table 11.3-5 Calculated Annual Average Release of Airborne Radionuclides (Ci/yr) (Maximum Releases) (Sheet 4 of 6)

Isotope(1)	Fuel Handling Area(2)	Containment	Auxiliary Building(3)	Turbine Building	Blowdown Vent Off Gas	Condenser Air Ejector Exhaust	Total Releases
I-131	2.17E-01	8.23E-01	5.06E+00	0.00E+00	0.00E+00	0.00E+00	6.10E+00
I-133	3.60E-01	1.21E+00	8.82E+00	0.00E+00	0.00E+00	0.00E+00	1.04E+01

Notes:
1. Appearing 0.00E+00 in the table indicates release is less than 1.0 Ci/y for noble gas, 0.0001 Ci/y for iodine.
2. The fuel handling area is within the reactor building, but is considered separately in this evaluation.
3. Including the reactor building.

Table 11.3-5 Calculated Annual Average Release of Airborne Radionuclides (Ci/yr) (Maximum Releases) (Sheet 5 of 6)

Isotope(1)	Gas Stripping		Containment	Auxiliary Building(2)	Turbine Building	Blowdown Vent Off Gas	Condenser Air Ejector Exhaust	Total Releases
	Shutdown	Continuous						
Kr-85m	0.00E+00	0.00E+00	0.00E+00	0.00E+00	0.00E+00	0.00E+00	0.00E+00	0.00E+00
Kr-85	5.33E+04	4.00E+05	1.67E+03	2.00E+03	0.00E+00	0.00E+00	1.00E+03	4.58E+05
Kr-87	0.00E+00	0.00E+00	0.00E+00	0.00E+00	0.00E+00	0.00E+00	0.00E+00	0.00E+00
Kr-88	0.00E+00	0.00E+00	0.00E+00	0.00E+00	0.00E+00	0.00E+00	0.00E+00	0.00E+00
Xe-131m	1.71E+02	1.22E+03	6.72E+01	8.55E+01	0.00E+00	0.00E+00	4.28E+01	1.59E+03
Xe-133m	0.00E+00	0.00E+00	0.00E+00	1.14E+02	0.00E+00	0.00E+00	0.00E+00	1.14E+02
Xe-133	0.00E+00	0.00E+00	0.00E+00	0.00E+00	0.00E+00	0.00E+00	0.00E+00	0.00E+00
Xe-135m	0.00E+00	0.00E+00	0.00E+00	1.60E+01	0.00E+00	0.00E+00	5.34E+00	2.14E+01
Xe-135	0.00E+00	0.00E+00	0.00E+00	2.80E+02	0.00E+00	0.00E+00	0.00E+00	2.80E+02
Xe-137	0.00E+00	0.00E+00	0.00E+00	0.00E+00	0.00E+00	0.00E+00	2.02E+01	2.02E+01
Xe-138	0.00E+00	0.00E+00	0.00E+00	9.93E+00	0.00E+00	0.00E+00	0.00E+00	9.93E+00

Notes:
1. Appearing 0.00E+00 in the table indicates release is less than 1.0 Ci/y for noble gas, 0.0001 Ci/y for iodine.
2. Including the reactor building.

Table 11.3-5 Calculated Annual Average Release of Airborne Radionuclides (Ci/yr) (Maximum Releases) (Sheet 6 of 6)

Isotope(1)	Waste Gas System	Containment	Auxiliary Building(3)	Fuel Handling Area(2)	Total Releases
Cr-51	1.40E-05	9.20E-05	3.20E-04	1.80E-04	6.10E-04
Mn-54	2.10E-06	5.30E-05	7.80E-05	3.00E-04	4.30E-04
Co-57	0.00E+00	8.20E-06	0.00E+00	0.00E+00	8.20E-06
Co-58	8.70E-06	2.50E-04	1.90E-03	2.10E-02	2.30E-02
Co-60	1.40E-05	2.60E-05	5.10E-04	8.20E-03	8.80E-03
Fe-59	1.80E-06	2.70E-05	5.00E-05	0.00E+00	7.90E-05
Sr-89	1.11E-03	3.27E-03	1.89E-02	5.28E-02	7.60E-02
Sr-90	3.25E-04	9.95E-04	5.55E-03	1.53E-02	2.22E-02
Zr-95	8.41E-06	0.00E+00	1.75E-03	6.31E-06	1.77E-03
Nb-95	9.02E-06	4.39E-05	7.31E-05	5.85E-03	5.98E-03
Ru-103	2.40E-07	1.20E-06	1.73E-06	2.86E-06	6.03E-06
Ru-106	5.98E-09	0.00E+00	1.33E-08	1.53E-07	1.72E-07
Sb-125	0.00E+00	0.00E+00	3.90E-06	5.70E-05	6.10E-05
Cs-134	1.21E+00	9.18E-01	1.98E+01	6.24E+01	8.44E+01
Cs-136	2.12E-03	1.28E-02	1.92E-02	0.00E+00	3.42E-02
Cs-137	1.12E+00	8.01E-01	1.05E+01	3.93E+01	5.17E+01
Ba-137m	5.37E-01	3.83E-01	5.02E+00	1.88E+01	2.48E+01
Ba-140	7.53E-06	0.00E+00	1.31E-04	0.00E+00	1.39E-04
Ce-141	9.67E-06	5.71E-05	1.14E-04	1.93E-06	1.83E-04

Notes:
1. Appearing 0.00E+00 in the table indicates release is less than 1.0 Ci/y for noble gas, 0.0001 Ci/y for iodine.
2. The fuel handling area is within the reactor building, but is considered separately in this evaluation.
3. Including the reactor building.

Table 11.3-6 Comparison of Calculated Offsite Airborne Concentrations with 10 CFR 20 Limits (Expected Releases)

Isotope	Discharge Concentration (μCi/ml)(1)	Effluent Concentration Limit (μCi/ml) (2)	Fraction of Concentration Limit
I-131	2.7E-15	2.00E-10	1.33E-05
I-133	4.1E-14	1.00E-09	4.06E-05
Kr-85m	0.0E+00	1.00E-07	0.00E+00
Kr-85	8.9E-10	7.00E-07	1.27E-03
Kr-87	0.0E+00	2.00E-08	0.00E+00
Kr-88	0.0E+00	9.00E-09	0.00E+00
Xe-131m	1.6E-10	2.00E-06	8.24E-05
Xe-133m	1.3E-12	6.00E-07	2.11E-06
Xe-133	0.0E+00	5.00E-07	0.00E+00
Xe-135m	2.5E-12	4.00E-08	6.34E-05
Xe-135	1.3E-12	7.00E-08	1.81E-05
Xe-137	2.5E-12	1.00E-09	2.54E-03
Xe-138	6.3E-13	2.00E-08	3.17E-05
Cr-51	3.9E-16	3.00E-08	1.29E-08
Mn-54	2.7E-16	1.00E-09	2.73E-07
Co-57	5.2E-18	9.00E-10	5.78E-09
Co-58	1.5E-14	1.00E-09	1.46E-05
Co-60	5.6E-15	5.00E-11	1.12E-04
Fe-59	5.0E-17	5.00E-10	1.00E-07
Sr-89	1.9E-15	2.00E-10	9.51E-06
Sr-90	7.6E-16	6.00E-12	1.27E-04
Zr-95	6.3E-16	4.00E-10	1.59E-06
Nb-95	1.6E-15	2.00E-09	7.93E-07
Ru-103	5.1E-17	9.00E-10	5.64E-08
Ru-106	4.9E-17	2.00E-11	2.47E-06
Sb-125	3.9E-17	7.00E-10	5.53E-08
Cs-134	1.5E-15	2.00E-10	7.29E-06
Cs-136	5.4E-17	9.00E-10	5.99E-08
Cs-137	2.3E-15	2.00E-10	1.14E-05
Ba-137m	2.3E-15	1.00E-09	2.28E-06
Ba-140	2.7E-16	2.00E-09	1.33E-07
Ce-141	2.7E-17	8.00E-10	3.33E-08
H-3	1.1E-10	1.00E-07	1.14E-03
C-14	4.6E-12	3.00E-09	1.54E-03
Ar-41	2.2E-11	1.00E-08	2.16E-03
TOTAL			9.19E-03

Notes:
1. X/Q=1.6E-05 s/m^3 (See Section 2.3.5) is used in this calculation.
2. 10 CFR 20, Appendix B Table 2.

Table 11.3-7 Comparison of Calculated Offsite Airborne Concentrations with 10 CFR 20 Limits (Maximum Releases)

Isotope	Discharge Concentration (μCi/ml)(1)	Effluent Concentration Limit (μCi/ml) (2)	Fraction of Concentration Limit
I-131	3.9E-12	2.00E-10	1.93E-02
I-133	6.6E-12	1.00E-09	6.59E-03
Kr-85m	0.0E+00	1.00E-07	0.00E+00
Kr-85	2.9E-07	7.00E-07	4.15E-01
Kr-87	0.0E+00	2.00E-08	0.00E+00
Kr-88	0.0E+00	9.00E-09	0.00E+00
Xe-131m	1.0E-09	2.00E-06	5.04E-04
Xe-133m	7.2E-11	6.00E-07	1.20E-04
Xe-133	0.0E+00	5.00E-07	0.00E+00
Xe-135m	1.4E-11	4.00E-08	3.39E-04
Xe-135	1.8E-10	7.00E-08	2.54E-03
Xe-137	1.3E-11	1.00E-09	1.28E-02
Xe-138	6.3E-12	2.00E-08	3.15E-04
Cr-51	3.9E-16	3.00E-08	1.29E-08
Mn-54	2.7E-16	1.00E-09	2.73E-07
Co-57	5.2E-18	9.00E-10	5.78E-09
Co-58	1.5E-14	1.00E-09	1.46E-05
Co-60	5.6E-15	5.00E-11	1.12E-04
Fe-59	5.0E-17	5.00E-10	1.00E-07
Sr-89	4.8E-14	2.00E-10	2.41E-04
Sr-90	1.4E-14	6.00E-12	2.34E-03
Zr-95	1.1E-15	4.00E-10	2.80E-06
Nb-95	3.8E-15	2.00E-09	1.89E-06
Ru-103	3.8E-18	9.00E-10	4.25E-09
Ru-106	1.1E-19	2.00E-11	5.45E-09
Sb-125	3.9E-17	7.00E-10	5.53E-08
Cs-134	5.4E-11	2.00E-10	2.68E-01
Cs-136	2.2E-14	9.00E-10	2.41E-05
Cs-137	3.3E-11	2.00E-10	1.64E-01
Ba-137m	1.6E-11	1.00E-09	1.57E-02
Ba-140	8.8E-17	2.00E-09	4.39E-08
Ce-141	1.2E-16	8.00E-10	1.45E-07
H-3	1.1E-10	1.00E-07	1.14E-03
C-14	4.6E-12	3.00E-09	1.54E-03
Ar-41	2.2E-11	1.00E-08	2.16E-03
TOTAL			9.12E-01

Notes:
1. X/Q=1.6E-05 s/m^3 (See Section 2.3.5) is used in this calculation.
2. 10 CFR 20, Appendix B Table 2.

Table 11.3-8 Input Parameters for the GASPAR II Code

Parameter		Value
X/Q (s/m^3)	at EAB	1.6E-05(1)
	at offsite food production area	5.0E-06(2)
D/Q (at site boundary) ($1/m^2$)		4.0E-08
Distance to site boundary (m)		800
Midpoint of plant life (s)		9.46E+08(30yr)
Fraction of the year that leafy vegetables are grown.		1.0
Fraction of the year that milk cows are on pasture.		1.0
Fraction of the maximum individual's vegetable intake that is from his own garden.		0.76
Fraction of milk-cow feed intake that is from pasture while on pasture.		1.0
Average absolute humidity over the growing season(g/m^3).		8.0
Fraction of the year that beef cattle are on pasture.		1.0
Fraction of beef-cattle feed intake that is from pasture while the cattle are on pasture		1.0
Animal considered for milk pathway		Cow
Source term		Table 11.3-5 (Sheet 1 to 3)
Other parameters		RG 1.109

Notes:
1. For gamma dose in air, beta dose in air, dose to total body, dose from ground, and dose due to inhalation (see Section 2.3.5).
2. For dose from food(Vegetable, meat, and cow milk) pathway (see Section 2.3.5).

Table 11.3-9 Calculated Dose from Gaseous Effluents (Sheet 1 of 2)

Type of Dose	Dose (1)
Gamma dose in air (mrad/yr)	2.10E-01
Beta dose in air (mrad/yr)	1.62E+00
Dose to total body (mrem/yr)	1.34E-01
Dose to skin (mrem/yr)	1.26E+00

Note:
1. Dose due to noble gases that include Ar-41

Table 11.3-9 Calculated Dose from Gaseous Effluents (Sheet 2 of 2)

Pathway	Dose to each organ (1) (mrem/yr)					
	GI-Tract	Bone	Liver	Kidney	Thyroid	Lung
Ground	3.86E-01	3.86E-01	3.86E-01	3.86E-01	3.86E-01	3.86E-01
Vegetable						
Adult	3.88E-01	2.28E+00	3.56E-01	3.02E-01	5.88E-01	2.83E-01
Teen	5.38E-01	3.27E+00	5.39E-01	4.56E-01	8.01E-01	4.29E-01
Child	1.02E+00	6.82E+00	1.14E+00	1.00E+00	1.66E+00	9.56E-01
Meat						
Adult	1.49E-01	4.11E-01	9.65E-02	9.04E-02	1.00E-01	8.80E-02
Teen	1.06E-01	3.44E-01	7.87E-02	7.39E-02	8.08E-02	7.21E-02
Child	1.49E-01	6.40E-01	1.40E-01	1.33E-01	1.45E-01	1.31E-01
Cow Milk						
Adult	1.17E-01	5.33E-01	1.78E-01	1.32E-01	5.10E-01	1.14E-01
Teen	1.98E-01	9.54E-01	3.09E-01	2.29E-01	8.28E-01	2.00E-01
Child	4.39E-01	2.27E+00	6.38E-01	5.02E-01	1.72E+00	4.53E-01
Infant	8.82E-01	4.26E+00	1.27E+00	9.87E-01	4.02E+00	9.14E-01
Inhalation						
Adult	1.20E-01	6.26E-02	1.18E-01	1.17E-01	2.11E-01	1.64E-01
Teen	1.20E-01	6.88E-02	1.20E-01	1.19E-01	2.42E-01	1.89E-01
Child	1.04E-01	6.56E-02	1.06E-01	1.05E-01	2.62E-01	1.63E-01
Infant	5.96E-02	2.76E-02	6.18E-02	6.05E-02	2.06E-01	1.01E-01
Total						
Adult	1.16E+00	3.67E+00	1.13E+00	1.03E+00	1.80E+00	1.04E+00
Teen	1.35E+00	5.02E+00	1.43E+00	1.26E+00	2.34E+00	1.28E+00
Child	2.10E+00	1.02E+01	2.41E+00	2.13E+00	4.17E+00	2.09E+00
Infant	1.33E+00	4.67E+00	1.72E+00	1.43E+00	4.61E+00	1.40E+00

Note:
1. Dose due to iodine, particulate, H-3 and C-14

Table 11.3-10 Instrument Indication and Alarm Information Page

Instrumentation		Readout Indication	Alarm
Waste Gas Compressor			
	Gas inlet pressure (recirculation line pressure)	X	High
	Compressor seal water temperature	X	High/Low
	Moisture separator level	X	High/Low
	Moisture separator pressure	X	High/Low
Gas Surge Tanks			
	Gas inlet pressure	X	High
Gas Dryer skid	**Waste Gas Cooler**		
	Outlet gas temperature	X	High
	Moisture separator level for waste gas cooler	X	High/Low
	Waste Gas Molecular Sieve Tank		
	Molecular sieve vessel gas temperature	X	High/Low
	Molecular sieve regeneration gas outlet temperature	X	High
	Molecular sieve waste effluent gas temperature	X	High
	Nitrogen gas flow rate for molecular sieve regeneration	X	High/Low
Dew Point Monitor			
	Gas dew point temperature	X	High
Charcoal Beds			
	Gas inlet temperature	X	High
	Gas inlet pressure	X	High
Radiation Monitor			
	Gas outlet radiation dose	X	High
Oxygen & Hydrogen analyzers			
	Oxygen concentration	X	High
	Hydrogen gas concentration	X	High
Oxygen analyzer skid（including two analyzers）			
	Oxygen concentration	X	High

Table 11.3-11 Equipment Codes and Standards for Radwaste Equipment (from Table 1, RG 1.143)

Component	Design and Construction	Materials	Welding	Inspection and Testing
Pressure Vessels and Tanks (>15 psig)	ASME Code BPVC Div. 1 or Div.2	ASME Code Section II	ASME Code Section IX	ASME Code Section VIII (Ref.11.3-15), Div. 1 or Div.2
Atmospheric Tanks	API 650	ASME Code(3) Section II	ASME Code Section IX	API 650
0-15 psig Tanks	API 620	ASME Code(3) Section II	ASME Code Section IX	API 620
Heat Exchangers	TEMA STD, 8th Edition ; ASME Code BPVC Section VIII (Ref.11.3-15),, Div. 1 or Div. 2	ASTM B359-98 or ASME Code Section II	ASME Code Section IX	ASME Code Section VIII (Ref.11.3-15), Div. 1 or Div. 2
Piping and Valves	ANSI/ASME B31.3(5), (6)	ASME Code Section II(7)	ASME Code Section IX	ANSI/ASME B31.3
Pumps	API 610; API 674; API 675; ASME BPVC Section VIII (Ref. 11.3-19), Div.1 or Div.2	ASTM A571-84 (1997) or ASME Code Section II	ASME Code Section IX	ASME BPVC Code(2) Section III, Class 3
Flexible Hoses and Hose Connections for MRWP(4)	ANSI/ANS-40.37	ANSI/ANS-40.37	ANSI/ANS-40.37	ANSI/ANS-40.37

Notes:
1. Manufacturer's material certificates of compliance with material specifications may be provided in lieu of certified material test reports as discussed in Regulatory Position 1.1.2 of RG 1.143
2. ASME Code stamp, material traceability, and the quality assurance criteria of ASME BPVC, Section III, Div.1, Article NCA are not required. Therefore, these components are not classified as ASME Code Section III, Class 3.
3. Fiberglass-reinforced plastic tanks will not be used for any equipment in the radwaste systems.
4. Flexible hoses should only be used in conjunction with mobile radwaste processing systems (MRWP).
5. Class RW-IIa and RW-IIb Piping Systems are to be designed as category “M” systems.
6. Classes RW-IIa, RW-IIb and RW-IIc are discussed in Regulatory Position 5 of RG 1.143.
7. ASME BPVC Section II required for pressure retaining components.

Table 11.3-12 Component Classification

Component	Safety Classification
Waste Gas Surge Tanks	RW IIa
Charcoal Beds	RW IIa
Waste Gas Compressor Package	RW IIb
Waste Gas Driver	RW IIb
Oxygen Gas Analyzer	RW IIc
Waste Gas Analyzer (Hydrogen/Oxygen)	RW IIc

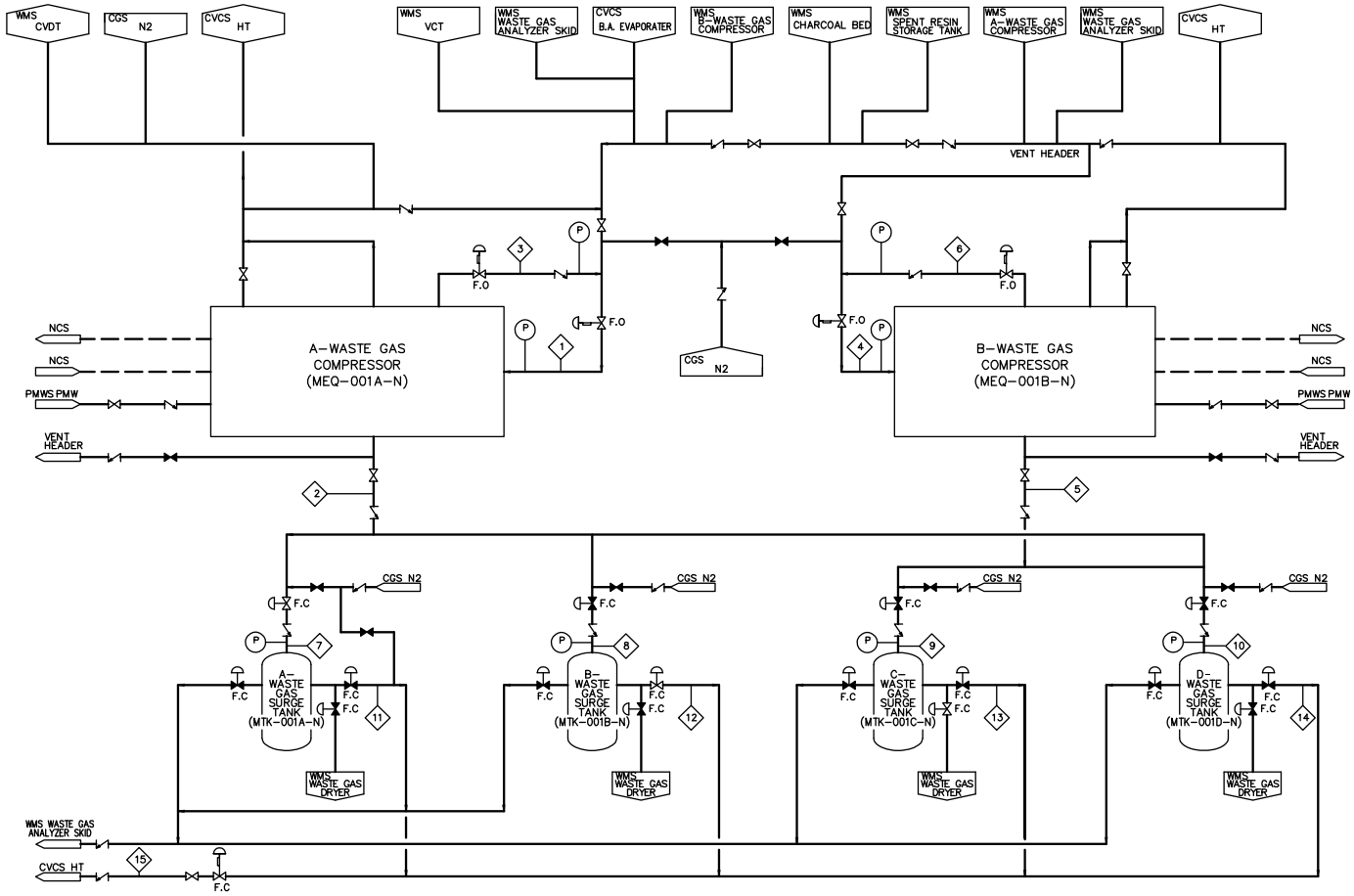

Figure 11.3-1 Gaseous Waste Management System Process Flow Diagram (Sheet 1 of 3)

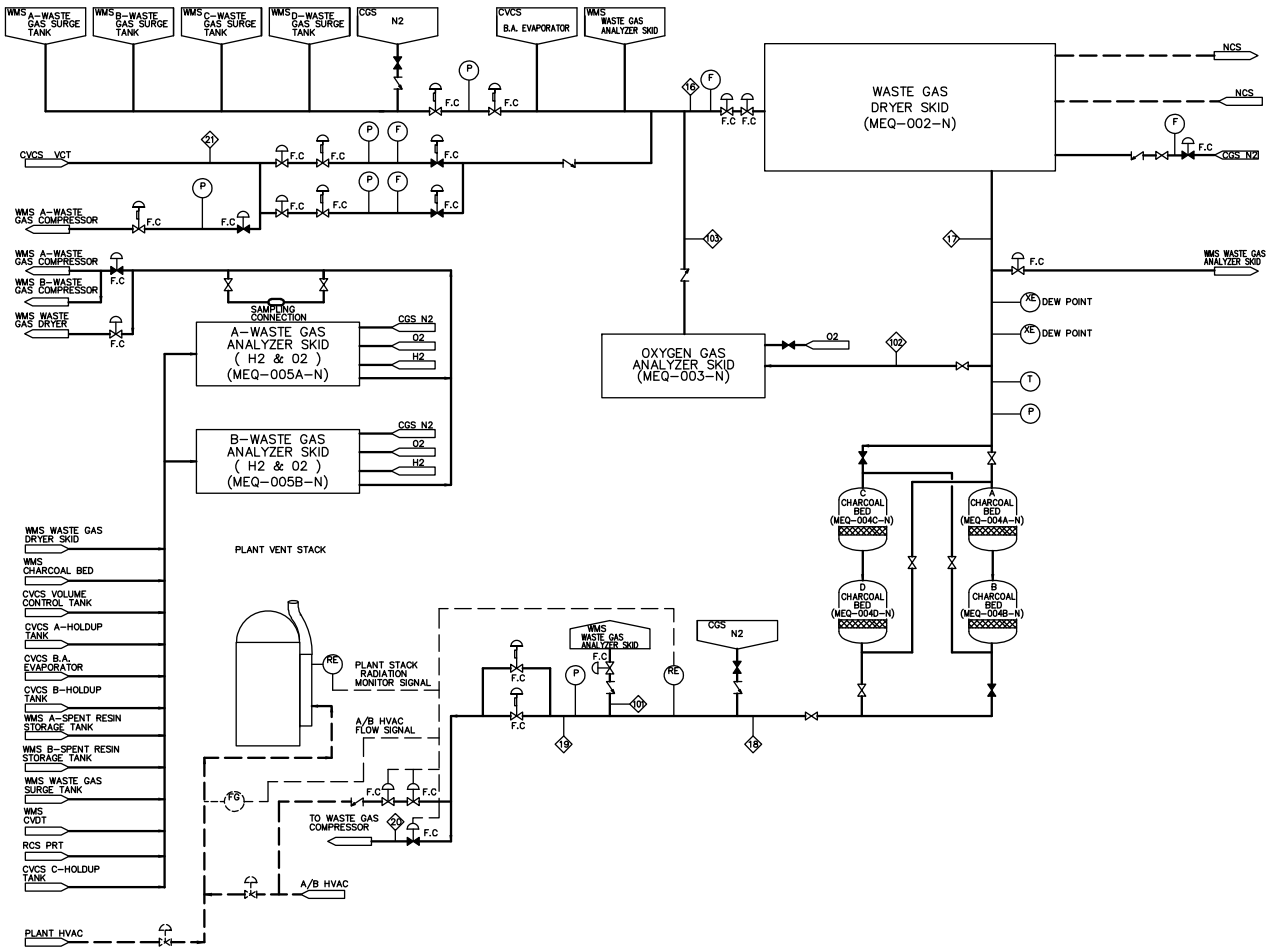

Figure 11.3-1 Gaseous Waste Management System Process Flow Diagram (Sheet 2 of 3)

STREAM DESCRIPTION

MAJOR PROCESS STREAMS	WASTE GAS COMPRESSOR SUCTION	WASTE GAS COMPRESSOR DISCHARGE	WASTE GAS COMPRESSOR RECIRCULATION	WASTE GAS COMPRESSOR SUCTION	WASTE GAS COMPRESSOR DISCHARGE	WASTE GAS COMPRESSOR RECIRCULATION
STREAM No.	1	2	3	4	5	6
FLOW sfcm	0 – 40	0 – 40	40-0	0 – 40	40–0	40-0
TEMPERATURE °F	50 – 104	50 – 104	50-104	50 – 104	50 – 104	50-104
PRESSURE psig	0.5	110	1.6	0.5	110	1.6

MAJOR PROCESS STREAMS	WASTE GAS SURGE TANK INLET	WASTE GAS SURGE TANK INLET	WASTE GAS SURGE TANK INLET	WASTE GAS SURGE TANK INLET	WASTE GAS SURGE TANK TO HT	WASTE GAS SURGE TANK TO HT
STREAM No.	7	8	9	10	11	12
FLOW sfcm	0-40	0-40	0-40	0-40	0-20	0-20
TEMPERATURE °F	50-104	50-104	50-104	50-104	50-104	50-104
PRESSURE psig	8.5-105	8.5-105	8.5-105	8.5-105	8.5-105	8.5-105

MAJOR PROCESS STREAMS	WASTE GAS SURGE TANK TO HT	WASTE GAS SURGE TANK TO HT	WASTE GAS SURGE TANKS HEADER TO HT	WASTE GAS DRYER INLET	WASTE GAS DRYER OUTLET	CHARCOAL BEDS OUTLET
STREAM No.	13	14	15	16	17	18
FLOW sfcm	0-20	0-20	0-20	1.2	1.2	1.2
TEMPERATURE °F	50-104	50-104	50-104	50-104	50-104	50-104
PRESSURE psig	8.5-105	8.5-105	1.6	2.8	2.8	2.8

MAJOR PROCESS STREAMS	GAS DISCHARGE TO VENT STACK	RETURN TO WASTE GAS COMPRESSOR	VCT TO WASTE GAS DRYER	PROCESSED GAS TO WASTE GAS ANALYZERS	PROCESSED GAS TO OXYGEN ALYZERS	RETURN TO WASTE GAS DRYER
STREAM No.	19	20	21	101	102	103
FLOW sfcm	1.2	1.2	0.7	0.11	0.11	0.11
TEMPERATURE °F	50-104	50-104	50-115	50-104	50-104	50-104
PRESSURE psig	2.8	1.6	16	2.8	2.8	2.8

(NOTE)
HT: Holdup tank
VCT: Volume control tank

Figure 11.3-1 Gaseous Waste Management System Process Flow Diagram (Sheet 3 of 3)

11.4 Solid Waste Management System

The Solid waste management system (SWMS) is designed to provide collection, processing, packaging, and storage of radioactive wastes produced during normal operation and AOOs, including startup, shutdown, and refueling operations. The SWMS also provides storage of the packaged wastes in the A/B.

11.4.1 Design Bases

11.4.1.1 Design Objectives

The design objectives of the SWMS are as follows:

- Provide the capability to segregate and package dry and wet solid wastes from normal operation, including AOOs.
- Provide the capability for processing, packaging, and storing radioactive wastes generated from the LWMS, the CVCS, the spent fuel pit cooling and purification system (SFPCS), the condensate polishing system (CPS), and the SG Blowdown system. Wastes from these systems are wet solid wastes and mainly consist of spent resin, spent activated carbon, oily waste, and sludge.
- Process and package wastes into disposal containers that are Department of Transportation (DOT) approved and are acceptable to waste disposal facilities.
- Provide a design that meets federal regulations and protects the worker and the general public from radiation in maintaining a dose level that is ALARA.

The SWMS is designed for individual unit operation and no subsystems or components of the SWMS are shared.

11.4.1.2 Design Criteria

The following design criteria are used for the SWMS:

- The SWMS complies with RG 1.143 (Ref. 11.4-1). The A/B is designed to meet RG 1.143, as described in Chapter 3, Subsection 3.8.4, in those areas where radwaste equipment is located. RG 1.143, Section 4.1, states that the design of radioactive waste management SSCs should follow the direction in RG 8.8 (Ref. 11.4-2). Demonstration of compliance with RG 8.8 (Ref. 11.4-2) is provided in Chapter 12, Section 12.1 and subsection 12.3.1.
- In accordance with RG 1.143 (Ref. 11.4-1), the SWMS consists of two SRSTs, and components and subsystems used to de-water or solidify radwaste prior to storage or offsite shipment.
- The shielding of the solid waste areas is designed using the design basis source term reported in Section 11.1. The spent filters and spent resin are assumed to be fully loaded with suspended solids and dissolved solids using the design basis source term, which is also used to determine the thicknesses of the shield walls.

- The SRSTs are cross-connected so that the failure or maintenance of one component does not impair the system or the plant operation. Table 11.4-5 provides typical failure scenarios. The spent resin storage tanks (SRSTs) are housed in individual cubicles, each with a shield wall thickness commensurate with the projected maximum dose rate of its content. The cubicles that contain significant quantities of radioactive material are coated with an impermeable epoxy liner (coating), up to the cubicle wall height equivalent to the full tank volume, to facilitate decontamination of the facility in the event of tank leakage and failure. This design feature, in conjunction with early leak detection, drainage and transfer capabilities, serves to minimize the release of the radioactive liquid to the groundwater and environment in accordance with the BTP 11-6 (Ref. 11.4-32) and 10 CFR 20.1406 (Ref. 11.4-16). As an additional precaution, the COL Applicant is also required to provide an environmental monitoring system (Section 11.5.5). Other design features addressing release requirements are described in Section 11.2

- Interconnections between the SWMS and other plant systems are designed so that contaminations of non-radioactive systems are precluded and the potential for uncontrolled and unmonitored releases of radiation to the environment from a single failure are minimized. This feature meets the requirements of IE bulletin 80-10 (Ref. 11.4-29).

- Storage is provided to facilitate radioactive decay of spent resin and to provide adequate holding in the case of a delay in processing due to maintenance and/or a delay in transportation for disposal.

- Any liquids and gases generated from the operation of the SWMS are processed by the LWMS (Section 11.2) and plant ventilation system (Chapter 9, Section 9.4). Based on typical PWR experience, a small quantity of sludge and oily waste is expected to be generated. Sludge is stabilized and transported to a disposal facility. Oily waste is collected and sent to appropriately licensed offsite vendors for processing and disposal.

- Collection, processing, packaging, and storage of radioactive wastes is performed to maintain any potential radiation dose to plant personnel ALARA in accordance with RG 8.8 (Ref. 11.4-2) and within the limits of 10 CFR 20 (Ref. 11.4-3). Some of the design features incorporated to maintain exposure levels ALARA include remote system operation and remotely actuated flushing, and an equipment layout that shields personnel from components containing radioactive materials.

- The SWMS is designed to package radioactive wastes in accordance with 10 CFR 61 (Ref. 11.4-4) and the applicable portions of 10 CFR 60 (Ref 11.4-5) and 10 CFR 63 (Ref. 11.4-6). The containers meet the requirement of 49 CFR 171 (Ref. 11.4-7). Solid wastes are processed and packaged for transportation and disposal according to the requirements specified in 49 CFR 173, Subpart I (Ref. 11.4-8).

- Sufficient onsite storage is provided to hold solid waste for at least 30 days in accordance with ANSI 55.1 (Ref. 11.4-9).

- The SWMS is designed to meet the requirements of 10 CFR 50, Appendix A, GDC 61 (Ref. 11.4-10) to assure adequate safety under normal and postulated accident conditions, and GDC 63 so that the SWMS has an ability to detect conditions that may result in excessive radiation levels and to initiate appropriate safety actions.

- Spent resin is sampled for analysis and the volume to be transferred into the high-integrity container is predetermined. After the filling operation, the radiation level of the container is monitored prior to offsite shipment assuring that the containers meet regulatory radiation limit and waste acceptance criteria, achieving compliance with 10 CFR 50, Appendix A, GDC 64 (Ref. 11.4-10).

- The SWMS is designed to meet the requirements of 10 CFR 20.1301(e), 10 CFR 20.2006, 10 CFR 20.2007and 10 CFR 20.2108.

- The SWMS is designed to minimize the potential for the release of radioactive effluent to the environment. Any liquids and gases from the operation of the SWMS are routed to the LWMS and GWMS for treatment. Liquid from the de-watering of spent resin and spent carbon, equipment and piping flushes and decontamination, and local area drainage are forwarded to the WHT or liquid radwaste sump tanks located in the A/B for collection and are pumped to the LWMS for further processing. During spent resin transfer and filling operations, the gases from the SRSTs are routed to the HT to be processed by the GWMS.

- The SWMS is designed to handle and package radioactive solid wastes remotely to keep radiation doses ALARA. This design approach results in radiation doses for individuals and the general population that are well within the limits of 10 CFR 20 (Ref. 11.4-3) and 10 CFR 50, Appendix I (Ref. 11.4-12).

11.4.1.3 Other Design Considerations

In addition to the listed design criteria, the following considerations are satisfied:

- The SWMS is a non-safety system and the components are non-seismic. The design specifications of the tanks and piping are consistent with those in Table 1 of RG 1.143 (Ref. 11.4-1).

- The SWMS consists of independent subsystems and components designed to handle different types of wastes. The control philosophy for the spent resin transfer operation is based on a manual start and an automatic stop. Interlocking is provided in some functions to provide a fail-safe mode of operation. The control panel for the fillhead operation is located in the A/B close to the area where solid wastes are handled. The resin transfer automatically stops when the high-integrity container reaches a high level or a high temperature. The camera located in the fillhead provides visual monitoring of the high-integrity container level in case the level transmitter fails to respond during the resin sluicing operation.

- The seismic and quality group classification of the SWMS building and components are discussed in Chapter 3, Section 3.2, in accordance with RG 1.143 (Ref. 11.4-1).

- The current design provides collection and packaging of potentially contaminated clothing for offsite shipment and/or disposal. Depending on site-specific requirements, the COL Applicant can send the wastes to an offsite laundry facility for processing and/or bring in a mobile compaction unit for volume reduction. The laundry services, including contracted services and/or a temporary mobile compaction subsystem, are COL items and are covered under Section 11.4.8.

- The SWMS is designed to comply with 10 CFR 50.34a (Ref. 11.4-11), 10 CFR 50, Appendix I (Ref. 11.4-12), and RG 1.110 (Ref. 11.4-13).

- The SWMS is designed to meet the applicable requirements of NUREG-0800 11.4, Appendix 11.4-A (Ref. 11.4-30) and Branch Technical Positions (BTP) 11-3 (Ref. 11.4-14)

- Tests and inspections are discussed in Section 11.4.6.

11.4.1.4 Method of Treatment

The SWMS provides separate treatment and handling methods for the different waste types. The waste types include spent resins, spent carbon, sludge, oil waste, and dry active waste. Dry active waste includes the following:

- Contaminated clothing, gloves, rags, and shoe coverings

- Compressible materials such as HVAC filters and non-flammable organic solid materials

- Contaminated metallic materials and incompressible solid objects such as contaminated wood, small tools, and equipment or subcomponents

The SWMS processes both wet and dry solid wastes in compliance with the following:

- All solid wastes generated in the RCA are monitored for radiation before processing. Liquid streams from solid waste processing are collected and treated by the LWMS; ventilation from SWMS equipment is processed by the GWMS and A/B HVAC system before it is discharged through the vent stack with other building ventilation.

- The SWMS contains 30-day storage for processed wastes in accordance with the guidance set forth in ANSI/ANS 55.1 (Ref. 11.4-9). Storage facility is designed with adequate shielding to minimize the radiation dose to the operators.

- The SWMS is operated from the radwaste control room and/or via a local control panel. Priority alarm signals such as a SRST level exceeding the setpoint are sent to the radwaste control room in the A/B.

- The SWMS is designed to operate continuously during normal condition and AOOs. For equipment sizing and process capability determination, the SWMS is designed to process the maximum design basis input in one week, assuming 40 hours work week, or processing one tank of SRST in one operating shift, whichever is controlling. When wastes are accumulated in excess of the normal operation, additional solid waste processing can be performed.

- The SWMS, including the modular de-watering subsystem, is connected to non-radioactive systems such as the PMW, nitrogen, and service air systems. The non-radioactive connections (e.g., PMW for flushing, nitrogen gas for sluicing spent resin, and service air to operate valves and pumps) to the SWMS components, including the modular de-watering system, contain double isolation valves and special fittings (e.g., one check valve and one isolation valve) to minimize the potential for cross contamination of the non-radioactive system. Table 11.4-7 contains typical service level II concrete systems such as coating types, dry film thicknesses (DFT), and specific permeabilities for the three typical epoxy coatings. This table provides typical Service level II concrete epoxy coatings, but approved equivalent Service level II concrete epoxy coatings can be utilized as a liner. These methods provide compliance with 10 CFR 20.1406 (Ref. 11.4-16)

- Each of the SRST cubicles is designed to contain the maximum liquid inventory in the event that the tank ruptures. These cubicles are coated with an impermeable epoxy liner (coating), up to the cubicle wall height equivalent to the full tank volume, to facilitate decontamination of the facility in the event of tank leakage and failure. This design feature, in conjunction with early leak detection, drainage and transfer capabilities serves to minimize the release of the radioactive liquid to the groundwater and environment in accordance with the BTP 11-6 (Ref. 11.4-32) and 10 CFR 20.1406 (Ref. 11.4-16). As an additional precaution, the COL Applicant is also required to provide an environmental monitoring system (Section 11.5.5).

- The SWMS has a temporary equipment connection for sending the waste directly to mobile equipment or to a high-integrity container for processing the solid radwaste. This connection meets RG 1.143 (Ref. 11.4-1) and ANSI/ANS-40.37-2009 “Mobile Low-level Radioactive Waste Processing System” (Ref. 11.4-17) or its equivalent requirements at the time of use.

11.4.1.5 Site-Specific Cost-Benefit Analysis

The SWMS is designed to be used for any site or plant. The design is flexible so that site-specific requirements, such as preference of technologies, degree of automated operation, and radioactive waste storage, can be incorporated with minor modifications to the design.

RG1.110 (Ref. 11.4-13) outlines compliance with to 10 CFR 50, Appendix I (Ref. 11.4-12) numerical guidelines for offsite radiation doses as a result of gaseous or liquid radioactive effluents during normal operations, including AOOs. The cost-benefit numerical analysis as required by 10 CFR 50, Appendix I (Ref. 11.4-12), Section II,

Paragraph D demonstrates that the addition of items of reasonably demonstrated technology will not provide a favorable cost benefit. The COL Applicant will perform a site-specific cost benefit analysis to demonstrate compliance with the regulatory requirements.

11.4.1.6 Mobile or Temporary Equipment

The SWMS is designed with permanently installed equipment (i.e., tanks and a crane, etc.), modular equipment (the spent resin de-watering subsystem), and some mobile equipment. The purpose of the modular and mobile design is to provide ease of equipment replacement due to either advances in treatment technologies and/or broken equipment ; such are further discussed in Sections 11.4.2, 11.4.4, and 11.4.4.5. The provision and conformance requirements for the mobile system or temporary equipment for solid radioactive waste processing shall be in accordance with ANSI/ANS-40.37-2009:Mobile Radioactive Waste Processing Systems or its equivalent standard at the time of use. The COL Applicant is responsible for ensuring that mobile and temporary solid radwaste processing equipment and its interconnection to plant systems conforms to regulatory requirements and guidance such as 10 CFR 50.34a (Ref. 11.4-11), 10 CFR 20.1406 (Ref.11.4-16) and RG 1.143 (Ref. 11.4-1).

11.4.2 System Description

The SWMS controls, collects, handles, processes, packages, and temporarily stores dry and wet solid waste generated by the plant prior to offsite shipping and disposal resulting from normal operations, including AOOs. The SWMS processes and packages waste from the LWMS, the CVCS, and the SFPCS. The SWMS also can receive solid waste from the CPS and the SG blowdown when the waste becomes radioactive. Waste from these systems consists of spent resin, spent charcoal, sludge, general contaminated plant debris, and spent filter elements. As these waste types differ in characteristics and contamination levels, the SWMS is divided into five subsystems that handle the following waste types:

- Dry active waste
- Spent filter elements
- Spent resin
- Spent activated carbon
- Oil and sludge

The boundary of the SWMS starts at specific waste generation streams and ends at the waste storage and truck bay of shipment of all solid waste. There is no direct discharge of waste to the environment but the packaged wastes are transferred to licensed offsite waste processing and disposal facilities.

For spent resins and spent activated carbon, the boundary to the SWMS starts downstream of the spent resin isolation valve from each of the demineralizers and activated carbon bed. Spent resin and spent carbon are transferred into the spent resin

storage tanks for staging in the SWMS and later on transferred to disposal containers. The containerized wastes are then moved into the dry waste storage area until transportation for offsite processing and/or disposal is arranged. Hence for spent resin and spent carbon, the boundary terminates at the truck bay.

For spent filters, the boundary starts at the filter replacement operation during which the spent filter is picked up by the spent filter cask and transferred by a cart into the spent filter loading area. The spent filter is then dropped into a disposal container in the loading area. When the disposal container is full, it is then moved into the storage area until transportation for offsite processing and/or disposal is arranged. Hence for spent filter, the boundary terminates at the truck bay.

Sludge and mixed wastes are separately collected at the point of generation, i.e., sump and special containers placed at specific location for collection. When the container is full, it is moved into the SWMS staging area inside the low activity storage area. Hence there are no specific process streams that serve as starting point, but that they are placed in the SWMS for staging until transportation for offsite processing and/or disposal is arranged. For these wastes, the boundary terminates at the truck bay.

Similarly, dry active wastes are collected at the point of generation during maintenance activities. For low contamination wastes, such as clothing and maintenance parts, they are collected in bags and boxes and brought the SWMS for staging. These wastes are placed into seal-land containers and/or B-25 boxes in the low activity storage area until transportation for offsite processing and/or disposal is arranged. The current design allows for maximum flexibility for the COL Applicant to treat and process these wastes to meet site-specific conditions. For these wastes, the boundary terminates at the truck bay.

11.4.2.1 Dry Solid Waste

Dry solid waste includes dry active waste and spent filter elements.

11.4.2.1.1 Dry active wastes

The dry active waste handling subsystem consists of an onsite storage area equipped with an overhead crane and a truck bay to load packaged waste for offsite transportation and disposal. Dry active waste is normally separated into three categories: non-contaminated wastes (clean), contaminated metal wastes, and the other wastes (i.e., clothing, plastics, HEPA filters, components, etc.). Non-contaminated wastes (clean) are not processed in the SWMS and are handled separately.

Dry active waste consists of contaminated air filters, contaminated equipment and equipment parts, solid laboratory wastes, and general plant waste that cannot be effectively decontaminated. The process control program contains plant-specific actions and procedures to handle and manage these wastes. The radioactivity of much of the dry active waste is low enough to permit contact handling and temporary storage in unshielded areas. Dry active waste is sorted and packaged in suitably sized containers that meet DOT requirements for offsite processing or final disposal. Higher activity dry active waste is separated from the low-activity waste, handled remotely, and transported in shielded containers.

General dry active waste consisting of contaminated clothing, broken and small contaminated tools and parts, contaminated pieces of wood, glass, and other materials is collected at the point of generation, surveyed, and segregated according to contamination types and radioactivity levels before they are transferred to the SWMS for packaging. The dry active waste handling and storage operation is outlined in Figure 11.4-1.

Table 11.4-2 provides an estimate of expected annual dry solid wastes and the anticipated waste classification based on operating experience and industry practices in similar PWR plants. The nuclide contamination (isotopes and activities) for these wastes is consistent with the realistic source term provided in Section 11.2. During some AOOs, such as a refueling condition, the rate of dry active waste generation is higher than the normal operation. For design purposes, a margin of 40% is included in the design of dry active waste generation and storage consideration. The SWMS is designed to operate continuously during normal condition and AOOs. For spent resin transfer equipment sizing and process capability determination, the SWMS is designed to process the maximum design basis volume in one operating shift. During the peak generation rate, additional waste handling and shipping operations can be planned to support operational needs. Maintenance activities may generate large-size dry active waste, such as wood planks and broken equipment. Handling of large-size waste must comply with the radiation protection program established for plant operation. Major equipment items, such as SGs, reactor vessels and vessel heads, are unique and are beyond the scope of the design of the SWMS. The licensee will dispose the spent equipment separately.

The design includes a truck bay located next to the packaged waste storage area. This design provides an enclosed area to bring a shipping container and load packaged waste onto the truck during periods of peak waste generation for offsite burial or processing in offsite facilities.

A permanently installed overhead crane is provided to move the packaged waste into and out of the storage area, and to load the waste onto shipping trucks. The crane has a span of about 55 ft and a lifting capacity of 40 tons. This capacity covers commonly used disposal containers in the industry.

Descriptions of wastes other than normally accumulated non-radioactive wastes such as wasted activated carbon from GWMS charcoal beds, solid wastes coming from component (Steam generator, Reactor vessel etc.) replacement activities, and other unusual cases will be described by the COL Applicant in the process control program and will be implemented in accordance with the milestones.

11.4.2.1.2 Spent Filter Element Handling Subsystem

The spent filter element handling subsystem consists of a spent filter transfer cask, a hoist, and a laydown area for spent filter handling. In order to access the spent filter element, the shield plug and the filter-housing flange have to be removed manually before the filter can be accessed remotely. Spent filter elements are handled remotely using a mobile spent filter transfer cask, which provides remote changing of filter cartridges, dripless transport to the storage area, and transfer of the filter cartridges into and out of filter storage, and loading of filter cartridges into disposal containers. Figure 11.4-1 is a process flow diagram of the spent filter handling subsystem.

11.4.2.2 Wet Solid Waste

Wet solid wastes include spent resin, spent charcoal, sludge, and oily waste. Each of these wastes is handled separately as described below. Table 11.4-1 provides an estimate of expected annual wet solid wastes based on operating experience and industry practices in similar PWR plants. During some AOOs, such as a refueling condition, the rate of wet solid waste generation is higher than the normal operation. For design purposes, a margin of 40% is included in the design of the total generation and storage. The design is based on a 40-hour work week. During the peak generation rate, additional waste handling and shipping operation can be planned to support operational needs.

11.4.2.2.1 Spent Resin Handling and De-watering Subsystem

The spent resin handling and dewatering subsystem consists of two SRSTs and a modular de-watering station consisting of a control console, a fillhead, and a de-watering pump.

The SRSTs are located in the A/B and are individually located in shielded cubicles. The de-watering equipment is in a shielded cubicle near the storage area. The SRSTs receive spent resin from various plant sources including the LWMS, CVCS, SFPCS, SG blowdown system, and the condensate polisher ion exchange columns. The SRSTs provide staging for decay and transfer capability into disposal containers for offsite disposal. There are two SRSTs: One for low radioactive resin/carbon such as those from the LWMS, SG blowdown treatment system, and the condensate polisher (Class A waste) and the other for high radioactive resin such as those from the CVCS and SFPCS (potentially Class B or C waste). The two SRSTs are cross-tied to provide redundancy for operational flexibility. Figure 11.4-2 is a process flow diagram of the spent resin handling subsystem. Piping and instrumentation diagrams (P&IDs) are to be included in the combined license application.

Nitrogen gas is used as a motive force to transfer resin from the SRSTs to a high-integrity container via a fillhead. The fillhead is lifted from the stand to the high-integrity container with a hoist and placed into position by aligning the fillhead and the high-integrity container. The fillhead is designed to be mounted manually on top of the high-integrity container and disengaged automatically when it is lifted after the sluicing. This design keeps the dose to the operator ALARA.

Proper controls, including flow elements, interlocks and level and temperature indications, are provided with the fillhead to control slurry flow so that only the required amount of spent resin is transferred into the high-integrity container (HIC). The resin transfer automatically stops when high level (typically 85-90% of container useable volume, or about 65” to 67” in container height) setpoint is reached in the high-integrity container. A separate level switch is provided approximately 2” above the high level to prevent over filling of the HIC. Additionally, a permanent level stick is installed inside the container for continuous monitoring of the liquid level in the HIC on the control panel. The operator also can stop the filling operation manually when the closed circuit television (CCTV) camera indicates a high level. The CCTV camera is used in case of level transmitter failure to minimize the potential for an overflow condition. The de-watering pump serves to remove and reduce standing water in the high-integrity container to less

than 0.5% by volume to meet the transportation requirements of 49 CFR 173, Subpart I (Ref. 11.4-8).Gaseous exhaust during transfer and dewatering activities is vented via a vent port connection on the fillhead to the A/B ventilation system.

11.4.2.2.2 Spent Charcoal Handling

The spent charcoal handling subsystem shares the use of the spent resin tanks and the de-watering equipment as described above.

Mixing waste is not recommended, therefore, the spent activated carbon from the LWMS is normally sent directly to disposal containers. De-watering of the spent carbon uses the same process as for spent resin. If the SRST is empty, the spent carbon can also be sent to the SRST for temporary storage until further processing is warranted. The process flow diagram of the spent carbon handling subsystem is presented in Figure 11.4-2.

The resin fill tank provides a means of filling demineralizers with fresh resins and charcoal adsorber with activated charcoal. The demineralizers are filled by gravity feed from a stationary resin fill tank (hopper). This tank is equipped with hoses to reach all the demineralizers. This tank is discussed in Section 9.3.

11.4.2.2.3 Oil and Sludge Handling

In areas where rotating equipment requires the use of oil for lubrication and decontamination for maintenance, the area drainage may contain lubricants and other waste solvents. This drainage is collected in the area sump tanks, which are specially designed to provide staging and oil separation by gravity. The separated oils are transferred directly into disposable drums. This waste may contain a low level of radioactive contaminants and is forwarded to an offsite vendor for final treatment and disposal. Operating procedures control all the chemicals that are used in the plant. The sump tank is designed to separate suspended solids. The suspended solids are extracted from the sump tank and transferred into the disposal container as sludge. The process flow diagram of the oily waste and sludge subsystem is presented in Figure 11.4-3.

The following design features identified under “Additional Design Features” in BTP 11.3 (Ref. 11.4-14) are incorporated into the SWMS:

1. Components and piping which contain slurries have flushing connections.

2. Tanks and equipment, which use compressed gases for transport of resin or filter sludge, are vented to the GWMS system or plant ventilation system. The SRST vents are routed to a breakpot to minimize the potential for liquids and solids (resin) from entering the vent header. The breakpot level indication alarms when the water level reaches the setpoint. This isolates the vent valve and opens the drain valve to direct the overflow water to the A/B sump, at the same time the alarm in the radwaste control room informs the operator to take corrective action if required.

11.4.2.2.4 Mixed Waste Handling

The standard SWMS is not designed to process any mixed wastes which contain both hazardous chemical and radioactive waste. The generation of mixed waste is prevented or minimized by the design specifications in that hazardous material shall not be used. Operating procedures are used to be instituted to prevent or minimize introduction of any listed or characteristic hazardous chemicals. In the event that it cannot be avoided, the waste needs to be segregated and disposed of in order to minimize cross-contamination. Potential sources for this category are the laboratory cleaning solutions and lubricants for rotating machinery. Non-hazardous chemicals should be used, however, if hazardous chemicals must be used, the waste must be collected separately in the chemical drain tank and pumped directly into a disposal container for offsite treatment and disposal. To prevent cross contamination, it is not to be mixed with other liquid waste sources.

11.4.2.3 Packaging, Storage, and Shipping

The SWMS is designed to use DOT-approved containers for packaging of radioactive wastes. Specific container types are determined by the facility operating procedures. To estimate the number of containers and the number of potential shipments, typical high-integrity containers with useful volumes of about 100 ft^3 for Class B or C waste, and 174 ft^3 for Class A waste were assumed. However, the design is flexible to allow the use of other DOT-approved containers.

Packaging of spent resin, spent charcoal, and spent filter is performed remotely and the operation is controlled from the radwaste control room and/or local control console for filter replacement and spent resin dewatering. The filling and dewatering area and the waste staging area are shielded, and ventilation is provided to insure that airborne activity in this area is controlled and not spreading to other areas. This approach keeps radiation doses ALARA. Waste is classified as A, B, C, or greater than Class C in accordance with 10 CFR 61.55 and 61.56 (Ref. 11.4-19, 11.4-20). The expected annual volumes of solid radwaste and its classification to be shipped offsite are estimated in Table 11.4-3. The packaging and shipment of radioactive solid waste for disposal complies with 10 CFR 20 Appendix G (Ref. 11.4-21) and 49 CFR 173 Subpart I (Ref.11.4-8). Waste to be packaged is sampled and analyzed; the radioactivity level of the waste is also monitored during the filling operation to insure meeting disposal requirements for the licensed land disposal facility. Each container of processed waste is classified as Class A, B, or C waste using a site-specific 10 CFR 61 (Ref. 11.4-6) Waste Form, in compliance with the site-specific process control program.

Some of the dry active waste is only slightly contaminated and permits contact handling. The SWMS design does not include compaction equipment or drum dryer equipment but provides the flexibility for the site-specific utilities to add compaction equipment or to adopt contract services from specialized facilities. The COL Applicant is required to provide information on the adoption of compaction equipment.

Storage for packaged radioactive wastes is provided in a shielded area. The storage area is conveniently located next to the truck bay at an elevation of 3’ 7” in the A/B. An overhead crane is provided to move the waste from the de-watering area to the storage area and to retrieve waste from storage for loading onto trucks for shipment offsite for

disposal. It is estimated that for 30 days of operation, about three containers of Class B waste and 20 containers of Class A waste will be generated. The number of shipments is determined by their facility to support plant operations. Long-term radioactive waste storage is a site-specific requirement. The COL Applicant is required to provide information to adequately store the radioactive waste.

Normally, filled waste containers are shipped promptly after they are filled. If a shipment cannot be promptly arranged, or if a single shipment is not cost-effective, the waste containers are staged in the shielded waste storage area. Waste containers can be retrieved from the storage area when a shipment is arranged. Waste containers are loaded for shipment inside the truck bay area in a controlled environment, minimizing radiation doses.

Operating procedures and administrative controls are implemented to prevent or minimize the use of listed or characteristic chemicals. If mixed waste is generated, it is collected primarily in 55-gallon drums and sent offsite to an appropriately licensed processor. When circumstances dictate the storage or disposal of mixed waste, those operations will be in accordance with the applicable regulatory requirements and associated permits.

11.4.2.4 Effluent Controls

The SWMS process flow diagrams are presented as follows:

- Figure 11.4-1 Dry active waste and spent filter handling subsystem
- Figure 11.4-2 Spent resin and charcoal handling subsystem
- Figure 11.4-3 Oil and sludge handling subsystem

Design process flow rates, tank capacities, and key instruments are included in these flow diagrams to indicate method of operation, system interfaces and bypass routes. The SRSTs are designed to store spent resin between fuel cycles (23.5 months) and the radioactive waste storage capacity is for 30 days.

Normally, no effluent is released from the SWMS. Liquid removed from the spent resin is transferred via the vacuum de-watering pump back to the WHTs for further processing in the LWMS. PMW is used for spent resin sluicing. The water extracted from the spent resin de-watering operation does not contain any chemical impurities. It is contaminated with resin fines and also some dissolved nuclides due to the liquid-solid equilibrium phenomenon. This water is forwarded to the WHTs for treatment. Also the contamination is low and is bounded by the design basis source term used for the LWMS treatment design. The dewatering area is designed with area drainage collection of any decontamination water. In the event that spillage occurs, or that the waste container drops and spills, decontamination water is available to clean the area. The drainage is directed to the WHTs for processing.

The spent resin transfer and dewatering operations are controlled from the radwaste control room in the A/B. The dewatering operation can also be controlled from a local control console located next to the dewatering cubicle. The spent resin filling and de-

watering operations have level control setpoints. Refer to Section 11.4.2.2.1 for details for the setpoint data.

During the operation of the SWMS, the individual component vent is processed through the GWMS (e.g., SRST vent) or the HVAC system (e.g., high-integrity containers) so that neither dust nor contaminated air is released to the workspaces.

11.4.2.5 Operation and Personnel Doses

The SRSTs are located in individually shielded cubicles in the A/B. These cubicles that contain significant quantities of radioactive material are coated with an impermeable epoxy liner (coating), up to the cubicle wall height equivalent to the full tank volume, to facilitate decontamination of the facility in the event of tank leakage and failure. This design feature, in conjunction with early leak detection, drainage and transfer capabilities, serves to minimize the release of the radioactive liquid to the qroundwater and environment in accordance with the BTP 11-6 (Ref. 11.4-32), 10 CFR 20.1302 (Ref. 11.4-15) and 10 CFR 20.1406 (Ref. 11.4-16). As an additional precaution, the COL Applicant is also required to provide an environmental monitoring system (Section 11.5.5). Normally, these cubicles are not occupied and the entrance is under administrative control and physical control with locked doors. Entrances are provided for inspection for ease of ingress and egress; therefore, minimizing stay time and radiation doses.

The de-watering operation is also performed in a shielded and epoxy-lined cubicle. The fillhead is handled remotely and has motors to automatically dislodge from the high-integrity containers. This design minimizes contact handling after the high-integrity container is filled. Control of the de-watering operation is performed in a separately shielded cubicle and/or in the radwaste control room. This design approach minimizes personnel radiation doses and complies with the dose limits of RG 8.8 (Ref. 11.4-2) and 10 CFR 20 (Ref. 11.4-3).

Ventilation air is designed to flow from areas of low contamination to areas of high contamination. Ventilation air in the dewatering area is controlled and exhausted from the de-watering area to maintain air quality and keep airborne activity to a minimum.

Except for low activity waste, such as contaminated clothing and decontaminated component parts and/or broken tools, radioactive waste is processed and stored in shielded areas. Access to these areas is under physical control (i.e., locked door) and administrative control to minimize radiation doses. Plant operating procedures are implemented so that radiation doses are ALARA. (see Chapter 12.)

11.4.3 Radioactive Effluent Releases

11.4.3.1 Radioactive Effluent Monitoring

The SWMS does not have radioactive liquid effluent. De-watered effluent and drainage are collected and forwarded to the WHTs for processing in the LWMS. The equipment and storage area vents are processed by the A/B HVAC system for discharge. The vents are blended with other HVAC vents and the effluent gases from the GWMS and are released to the environment via the vent stack. The vents are expected to be slightly

contaminated and are bounded by the design basis source term used for the calculation of gaseous releases in Section 11.3.

The treated gaseous waste is monitored for radiation level (monitor R-72) before it is released into the vent stack. Upon detection of radiation above a predetermined setpoint, the inline radiation monitor activates an alarm in the MCR and the radwaste control room and initiates closure of the discharge valve and the HVAC damper. The HVAC duct in the A/B is monitored for radiation level (monitor R-48B, Ref. Chapter 12). Dual and redundant radiation monitors (monitors R-21A/B) also are provided in the vent stack to monitor the radiation level after the radioactive gases and the HVAC vents are mixed. These monitors are designated for routine operation including AOOs. Additionally, two more monitors (R-80A (mid-range) and R-80B (high-range)) are provided to operate under post-accident conditions. This design approach meets the requirements in GDC 13, 60, 63 and 64 (Ref. 11.4-10). A discussion of these and other process radiation monitors is included in Section 11.5.

11.4.3.2 Process Control Program

The process control program contains site-specific requirements. The COL Applicant is to provide the process control program. The process control program needs to be consistent with the guidance provided in NEI 07-10A, Generic final safety analysis report (FSAR) Template for process control program (Ref. 11.4-23). The parameters used for the calculation of offsite doses for the gaseous and liquid effluents. The manual also contains the planned effluent discharge flow rates and addresses the numerical guidelines stated in 10 CFR 50 Appendix I (Ref. 11.4-12). The manual shall be generated in accordance with the requirement of 10 CFR 71 (Ref. 11.4-31), the guidance of NUREG-1301 (Ref. 11.4-24), NUREG-0133 (Ref. 11.4-25), and with the guidance of RGs 1.109 (Ref. 11.4-26), 1.111 (Ref. 11.4-27), or 1.113 (Ref. 11.4-28). The manual includes a discussion of how the NUREGs, RGs, or alternative methods are implemented.

11.4.3.3 Packaged Waste Storage and Shipment

Packaged waste is stored in the radioactive waste storage area inside a shielded area in the A/B. The SWMS is designed to use DOT-approved containers, which are used in the radioactive waste industry. The containers include drums, high-integrity containers, B-25 boxes, and others that are DOT-approved and accepted by waste disposal facilities. Specific containers, (i.e., types and makes), are to be determined by plant operations. For estimating purposes, high-integrity containers with 100 cubic feet usable volumes, 55-gallon drums, and B-25 boxes are used to calculate the storage requirements. Table 11.4-3 summarizes the projected solid waste generated over one year during normal operation and AOOs. When shipment is arranged, the packaged waste is retrieved from the storage area and loaded onto a truck inside the enclosed truck bay in the A/B. Waste manifests are prepared to describe the waste type and its chemical and radiological characteristics based on sampling and analysis. The wastes are packaged in compliance with the requirements in 10 CFR 61.55 and are verified before shipment. These wastes are shipped offsite for treatment and/or disposal.

During normal operation and maintenance, a small amount of oily waste and sludge is generated (Table 11.4-1). These wastes are collected into drums and sorbent is added

as required to stabilize the liquid for transportation to an approved facility for treatment and disposal.

30 days of on-site storage space is provided for packaged waste. Wastes are packaged in high-integrity containers, shielded filter containers, 55-gallon (200-liter) drums, and boxes. Temporary storage is provided on-site in the A/B next to the truck bay as shown in Figures 11.5-2c. A movable wall is used to shield high-integrity containers located in the on-site storage area. This wall separates the low activity storage from the high-level storage area. There is a notch on the wall to allow high-integrity containers or drums to be moved between the high and low activity storage areas and into the truck bay area.

11.4.4 Component Description

A description of the SWMS components, including the design of the tanks, pumps, and de-watering mobile unit, is shown in Table 11.4-4. The capacities, materials of construction, and applicable codes are included.

11.4.4.1 Tanks

11.4.4.1.1 Spent Resin Storage Tank

Each of the two SRSTs is a cylindrical vertical tank with a hemispherical head and bottom and is sized to collect a volume of spent resin for one fuel cycle of operation (two years). The SRSTs are sized to accommodate normal operation and AOOs including refueling operation.

The tanks are stainless steel pressure vessels for nitrogen gas operation. Each tank is protected by a pressure relief valve and is vented through a breakpot from which the exhaust air is discharged to the vent header in the GWMS.

11.4.4.1.2 Breakpot Tank

The breakpot tank is a cylindrical vertically mounted stainless steel vessel with hemispherical heads. The tank is constructed per standards and design parameters in Table11.4-4. Both SRST vents are routed to a breakpot tank located downstream of the SRST relief valve to minimize the potential for liquids and solids (resin) from entering the vent header.The breakpot tank is equipped with a level alarm indication to transfer the water to the A/B sump and notify the operator of an abnormal condition. The tank will be sized to minimize the possibility of an overflow condition of the spent resin storage tanks (SRSTs) causing fouling of the Gaseous Waste Management System.

11.4.4.2 Pumps

11.4.4.2.1 Sludge Pump

A sludge pump is used to transfer sludge to drums. The pump is manually started and is turned off at the operator’s discretion. The fill line is equipped with a level switch to turn the pump off when the drum is full.

11.4.4.2.2 De-watering Pump

A diaphragm pump is used for spent resin and spent carbon de-watering. This pump is connected to the fillhead on top of the high-integrity container and is used to pull vacuum and moisture out of the high-integrity container after it is filled with spent resin. This pump is controlled from a local panel and is turned off manually when the moisture has reached the specified limit.

11.4.4.3 Piping

Piping used for the hydraulic transport of slurries, such as ion exchange resins and sludge, is specifically designed for trouble-free operation. Pipe flow velocities are maintained in a turbulent flow regime appropriate for the slurry being transported (ion exchange resins or tank sludge). Appropriate valves and pipe fittings are used to maintain unhindered flow. An adequate water/solids ratio is maintained throughout the transfer. Slurry piping is provided with washing and flushing capability with sufficient water to flush the pipe after each use (e.g., at least two pipe volumes).

11.4.4.4 Venting and Relief Valve

The SRST is vented to the vent header via a breakpot. The SRST is equipped with a relief valve to protect the SRST from over-pressurization. The relief valve vents to the vent header. When sluicing resin to the high-integrity container, the SRST vent is closed to allow the SRST to be pressurized with nitrogen gas. In addition to the relief valve, the SRST is equipped with a pressure alarm to inform the operator of an abnormal condition.

11.4.4.5 Mobile De-watering System

The mobile de-watering subsystem includes modular skids that are designed to be readily mobile and flexible. This mobile de-watering subsystem is typically comprised of one high-integrity container, a de-watering fillhead station, a pump, a control console, and a CCTV to monitor tank level operation. A level instrument, temperature instrument, and a CCTV are provided as part of the fillhead assembly so that the high-integrity container is not over flowed. A configuration of the mobile de-watering system is depicted in Figure 11.4-2. Identification of mobile/portable SWMS connections that are considered non-radioactive but later may become radioactive through contact or contamination with radioactive systems and preparation of operating procedures so that the guidance and information in Inspection and Enforcement (IE) Bulletin 80-10 (Ref. 11.4-29) is followed are the responsibility of the COL Applicant.

11.4.5 Malfunction Analysis

The spent resin handling subsystem is protected from component failure and operator error through a series of safety interlocks (i.e. manual start and automatic stop) such as the level and temperature alarms, which automatically stop the transfer operation. The following administrative conditions are to be verified by the operator before each resin transfer operation:

1. A waste container is properly in place and the container is not full or overweight (manual operation).

2. The fillhead assembly is secured onto and covering the container prior to the start of the filling and de-watering operation (manual operation).

3. Remote and continuous viewing of container filling and de-watering are operational using remote cameras and light assembly (manual function).

4. High level or temperature alarms with automatic isolation functions are operational.

Steps 1 through 3 consist of manual operation and are controlled by plant procedures. Failure to meet the step 4 condition automatically stops the transfer operation. The operation maybe interrupted by the operator at any time and the process restarted without adverse consequences. The operation maybe restarted at the same point in the process after failure has been remedied. Table 11.4-5 Equipment Malfunction Analysis identifies the major equipment malfunctions.

11.4.6 Testing and Inspection Requirements

Preoperational testing of the SWMS is performed to verify the proper operation of equipment and processes, and is discussed in Chapter 14, Section 14.2. Performance testing of the SWMS is conducted to demonstrate acceptable performance of the radioactive waste processing and storage subsystems under normal operational conditions and AOOs as discussed in Chapter 14, Section 14.2. Thereafter, portions of the systems are tested as needed.

During initial testing of the system, performance of the nitrogen supply and mobile systems are tested to demonstrate conformance with design flows and process capabilities. An integrity test is performed on the system upon completion of construction.

Provisions are made for periodic inspection of major components to verify the capability and integrity of the systems. Display devices are provided to indicate vital parameters required in routine testing and inspection.

Epoxy coatings in cubicles that contain significant quantities of radioactive material, including the SRST rooms, are Service Level II coatings as defined in RG 1.54 Revision 1, and are subject to the limited QA provisions, selection, qualification, application, testing, maintenance and inspection provisions of RG 1.54 and standards referenced therein, as applicable to Service Level II coatings. Post-construction initial inspection is performed by personnel qualified using ASTM D 4537 (Reference 11.4-31) using the inspection plan guidance of ASTM D 5163 (Reference 11.4-32).

11.4.7 Instrumentation Requirements

The SWMS is operated and monitored from the radwaste control room in the A/B, with the exception of the fillhead operation that is performed from a local control panel. Major system parameters (i.e., SRST level, process flow rate, etc.) are indicated and alarmed as required to provide operational information and performance assessment. Key system alarms, such as a high level in the SRST, are repeated in the MCR. A list of alarm instruments and location of readouts is presented in Table 11.4-6.

Instruments, including back flushing provisions, are located in low radiation areas when possible for accessibility and fulfillment of the ALARA provisions.

11.4.8 Combined License Information

The COL Applicant is to provide the following, which apply on a plant-specific basis:

COL 11.4(1) *The current design meets the waste storage requirements in accordance with ANSI/ANS-55.1. When the COL Applicant desires additional storage capability beyond that which is discussed in this Tier 2 document, the COL Applicant will identify plant-specific needs for on-site waste storage and provide a discussion of on-site storage of low-level waste.*

COL 11.4(2) *Deleted*

COL 11.4(3) *The COL Applicant is to prepare a plan for the process control program describing the process and effluent monitoring and sampling program. The plan should include the proposed implementation milestones.*

COL 11.4(4) *The COL Applicant is to describe mobile/portable SWMS connections that are considered non-radioactive but later may become radioactive through contact or contamination with radioactive systems (i.e., a non-radioactive system becomes contaminated due to leakage, valving errors, or other operating conditions in the radioactive systems)The COL Applicant is to prepare a plan to develop and use operating procedures so that the guidance and information in Inspection and Enforcement (IE) Bulletin 80-10 (Ref. 11.4-29) is followed.*

COL 11.4(5) *The current design provides collection and packaging of potentially contaminated clothing for offsite shipment and/or disposal. Depending on site-specific requirements, the COL Applicant can send the wastes to an offsite laundry facility processing and/or bring in a mobile compaction unit for volume reduction. The laundry services, including contracted services and/or a temporary mobile compaction subsystem, are COL items.*

COL 11.4(6) *The COL Applicant is required to perform a site-specific cost benefit analysis to demonstrate compliance with the regulatory requirements.*

COL 11.4(7) *The SWMS design does not include solid waste processing facility (e.g. de-watering system, compactor for reducing waste volume) but provides the flexibility for the site-specific utilities to add compaction equipment or to adopt contract services from specialized facilities. This is the responsibility of the COL Applicant.*

COL 11.4(8) *The COL Applicant is to provide piping and instrumentation diagrams (P&IDs).*

COL 11.4(9) The COL Applicant is responsible for identifying the implementation milestones for the coatings program used in the SWMS. The coatings program addresses RG 1.54 Revision 1, recognizing that more recent standards may be used if referenced in DCD Section 11.4.

COL 11.4(10) The COL Applicant is responsible for ensuring that mobile and temporary solid radwaste processing and its interconnection to plant systems conforms to regulatory requirements and guidance such as 10 CFR 50.34a (Ref. 11.4-11), 10 CFR 20.1406 (Ref.11.4-16) and RG 1.143 (Ref. 11.4-1).

11.4.9 References

11.4-1 Design Guidance for Radioactive Waste Management Systems, Structures, and Components Installed in Light-Water-Cooled Nuclear Power Plants, Regulatory Guide 1.143, Rev. 2, November 2001.

11.4-2 Information Relevant to Ensuring that Occupational Radiation Exposures at Nuclear Power Stations Will Be as Low as Is Reasonably Achievable, Regulatory Guide 8.8, Rev. 3, June 1978.

11.4-3 Standards for Protection Against Radiation, NRC Regulations Title 10, Code of Federal Regulations, 10 CFR Part 20, December 2002.

11.4-4 Licensing Requirements for Land Disposal of Radioactive Waste, NRC Regulations Title 10, Code of Federal Regulations, 10 CFR Part 61.

11.4-5 Disposal of High-Level Radioactive Wastes in Geologic Repositories, NRC Regulations Title 10, Code of Federal Regulations, 10 CFR Part 60.

11.4-6 Disposal of High-Level Radioactive Wastes in a Geologic Repository at Yucca Mountain, Nevada, NRC Regulations Title 10, Code of Federal Regulations, 10 CFR Part 63.

11.4-7 General Information, Regulations, and Definitions, DOT Regulations Title 49, Code of Federal Regulations, 49 CFR Part 171.

11.4-8 Shippers-General Requirements for Shipments and Packaging, DOT Regulations Title 49, Code of Federal Regulations, 49 CFR Part 173.

11.4-9 Solid Radioactive Waste Processing System for Light-Water-Cooled Reactor Plants. ANS/ANSI 55.1.

11.4-10 General Design Criteria for Nuclear Power Plants, NRC Regulations Title 10, Code of Federal Regulations, 10 CFR Part 50, Appendix A.

11.4-11 Design Objectives for Equipment to Control Releases of Radioactive Material in Effluents-Nuclear Power Reactors, NRC Regulations Title 10, Code of Federal Regulations, 10 CFR Part 50.34a.

11.4-12 Numerical Guides for Design Objectives and Limiting Conditions for Operation To Meet the Criterion "As Low as is Reasonably Achievable" for Radioactive Material in Light-Water-Cooled Nuclear Power Reactor Effluents, NRC Regulations Title 10. Code of Federal Regulations, 10 CFR Part 50, Appendix I.

11.4-13 Cost-Benefit Analysis for Radwaste Systems for Light-Water-Cooled Nuclear Power Reactors. Regulatory Guide 1.110, March 1976.

11.4-14 Design Guidance for Solid Radioactive Waste Management Systems Installed in Light Water Cooled Nuclear Power, Branch Technical Position 11-3.

11.4-15 Compliance with dose limits for individual members of the public, NRC Regulations Title 10, Code of Federal Regulations, 10 CFR Part 20.1302.

11.4-16 Minimization of Contamination, NRC Regulations Title 10, Code of Federal Regulations, 10 CFR Part 20.1406.

11.4-17 Mobile Low-level Radioactive Waste Processing System, ANSI/ANS-40.37-2009.

11.4-18 Deleted

11.4-19 Waste classification, NRC Regulations Title 10, Code of Federal Regulations, 10 CFR Part 61.55.

11.4-20 Waste characteristics, NRC Regulations Title 10, Code of Federal Regulations, 10 CFR Part 61.56.

11.4-21 Requirements for Transfers of Low-Level Radioactive Waste Intended for Disposal at Licensed Land Disposal Facilities and Manifests, NRC Regulations Title 10, Code of Federal Regulations, 10 CFR Part 20, Appendix G.

11.4-22 Deleted

11.4-23 Nuclear Energy Institute, Generic FSAR Template for Process Control Program, NEI 07-10A, Revision 0.

11.4-24 Dose limits for individual members of the public, NRC Regulations Title 10, Code of Federal Regulations, 10 CFR Part 20.1301.

11.4-25 Preparation of Radiological Effluent Technical Specifications for Nuclear Power Plants, NUREG-0133.

11.4-26 Calculation of Annual Doses to Man from Routine Releases of Reactor Effluents for the Purpose of Evaluating Compliance with 10 CFR Part 50, Appendix I, Regulatory Guide 1.109, Rev. 1, October 1977.

11.4-27 Methods for Estimating Atmospheric Transport and Dispersion of Gaseous Effluents in Routine Releases from Light-Water-Cooled Reactors, Regulatory Guide 1.111, Rev. 1, July 1977.

11.4-28 Estimating Aquatic Dispersion of Effluents from Accidental and Routine Reactor Releases for the Purpose of Implementing Appendix I, Regulatory Guide 1.113, Rev. 1, April 1977.

11.4-29 Contamination of Nonradioactive System and Resulting Potential for Unmonitored, Uncontrolled Release of Radioactivity to Environment, U.S. Nuclear Regulatory Commission, IE Bulletin No. 80-10, May 6, 1980.

11.4-30 U.S. Nuclear Regulatory Commission, Standard Review Plan for the Review of Safety Analysis Reports for Nuclear Power Plants, NUREG-0800.

11.4-31 Packaging and transportation of radioactive material, NRC Regulations Title 10, Code of Federal Regulations, 10 CFR Part 71.

11.4-32 American Society for Testing and Materials, Standard Guide for Establishing Procedures to Qualify and Certify Personnel Performing Coating Work Inspection in Nuclear Facilities, ASTM D 4537-04a.

11.4-33 American Society for Testing and Materials, Standard Guide for Establishing a Program for Condition Assessment of Coating Service Level I Coating Systems in Nuclear Power Plants. ASTM D 5163-08.

11.4-34 Nuclear Regulatory Commission, Service Level I, II, and III Protective Coatings Applied to Nuclear Power Plants, Regulatory Guide 1.54, Rev. 1, July 2000.

Table 11.4-1 Expected Waste Volume Generated Annually by Each "Wet" Solid Waste Source

Wet Waste Source	Volume Generated	Waste Classification
Sludge	50 cubic feet (ft^3) per year (1), (2)	A
Oil	35 cubic feet (ft^3) per year (2), (3)	A

Note:
1. The majority of the sludge is collected in the A/B sump tank and will be pumped and collected into disposal drums. Other fine particulate matter is pumped into the LWMS WHTs and is processed and collected by the LWMS filters.
2. The sludge and oil are slightly radioactive. Their specific activities are estimated based on plant operating experience.
3. The oil estimate is based on operating plant data. The oil is pumped directly into disposal drums for offsite treatment and disposal.
   The storage requirements in BTP 11.3, Part B.III.1 are met.

Table 11.4-2 Estimate of Expected Annual "Dry" Solid Wastes and Waste Classification

Dry Waste Source	Volume Generated(1)	Waste Classification
Spent Resin Low Activity(2) High Activity(3)	 212 ft^3 247 ft^3	 A B
Spent Filter High Activity Low Activity	 12 ft^3 20 ft^3	 B A
Spent Carbon	35 ft^3	A
Sludge	50 ft^3	A
Dry active waste High Activity Low Activity	 1,000 ft^3 9,200 ft^3	 B A

Note:
1. Volumes in the table are disposed volumes and based on averaged PWR operating experience.
2. High activity waste refers to Class B/C waste per 10 CFR 61.55 waste classification.
3. Low activity waste refers to Class A waste per 10 CFR 61.55 waste classification.

Table 11.4-3 Calculated Shipped Solid Waste Volumes and Classification

Waste Type	Shipped Volume(1)	Waste Classification
Spent Resin Low Activity High Activity	 250 ft^3 290 ft^3	 A B
Spent Filter High Activity Low Activity	 17 ft^3 35 ft^3	 B A
Spent Carbon	14 ft^3	A
Sludge	42 ft^3	A
Dry active waste High Activity Low Activity	 1,430 ft^3 13,200 ft^3	 B A

Note:
1. Volumes are shipping volumes with consideration of packing efficiency.

Table 11.4-4 Solid Waste Management System Component Data Summary

Component	Quantity	Standards	Type	capacity	Design Pressure(psi)	Design Temp (°F)	Normal Operating Pressure (psi)	Normal Operating Temp (°F)	Material
Spent Resin Storage Tank	2	ASME BPVC, Div 1 or Div 2	Cylindrical, Vertical	800 (ft^3)	150	150	slightly positive	Ambient	SS
Spent Filter Cask	1	Industrial Standard	Cylindrical	Not Applicable	Not Applicable	Not Applicable	Atm	Ambient	CS
Fillhead	1	Industrial Standard	Circular	Not Applicable	150	150	Atm	Ambient	SS
Breakpot Tank	1	ASME BPVC, Div 1 or Div 2	Cylindrical, Vertical	Approximately 4 (ft^3)	100	200	slightly positive	Ambient	SS
De-watering Vacuum Pump	1	API-610; API-674; API-675; ASME Code Section VIII, Div. 1 or Div. 2	Vacuum	45 (gpm)	Vacuum	150	Vacuum	Ambient	SS
Sludge Pump	1	API-610; API-674; API-675; ASME Code Section VIII, Div. 1 or Div. 2	Centrifugal/ Mechanical Seal	45 (gpm)	150	150	Atm	Ambient	SS

Table 11.4-5 Equipment Malfunction Analysis

Equipment Item	Malfunction	Result(s)	Alternate Action
High integrity container level instrument	Level instrument failure	Loss of automatic filling function. Instrumentation sensors can be isolated and repaired or replaced.	Visual inspection can be performed by the camera located on top of the high-integrity container to view high-integrity container level.
SWMS	Earthquake damage	Spent resin storage tank rupture; resin and fluid leakage.	Resin is contained in the room. Liquid release is bounded by LWMS tank release. Dose consequences are within the design guidance of SRP 11.4 appendix 11.4-A.
Spent resin storage tank external valve leak	Fluid leaks out	Local contamination.	Isolate leak and use other SRST. Repair the leak. The floor is epoxy lined (coated) to facilitate decontamination in the event of valve leakage.
Plant makeup water inlet flow	Flow instrument failure	Instrumentation sensors can be isolated and repaired or replaced.	A controlotron can be installed outside the piping to measure the flow.
Spent resin tank level	Level instrument failure	Instrumentation sensors can be isolated and repaired or replaced.	Tygon tubing can be used to measure tank level or the loop seal to fill up the tank.
Spent resin tank pressure	Pressure instrument failure	Instrumentation sensors can be isolated and repaired or replaced.	A temporary gauge can be installed on the drainage line to measure tank pressure.
High integrity container temperature	Temperature instrument failure	Instrumentation sensors can be isolated and repaired.	Sluicing can be delayed until temperature instrument is fixed.
Crane failure and load drop high-integrity container or drum	Crane failure	Auxiliary building contamination.	The area is roped off temporarily until the area has been decontaminated .
Breakpot level	Level instrument failure	Instrumentation sensors can be isolated and repaired or replaced.	Sluicing can be delayed until level sensor is fixed.

Table 11.4-6 Instrument Indication and Alarm Information Page

Instrumentation	Readout Indication	Indication Location	Alarm	Alarm Location
Spent Resin Tanks				
PMW inlet flow	X	Radwaste Control Room	NA	NA
Spent Resin Tank Level	X	Radwaste Control Room	High/Low	Radwaste Control Room (High/Low) Main Control Room (High)
Spent Resin Tank Pressure	X	Radwaste Control Room	High	Radwaste Control Room
High Integrity Container				
High Integrity Container Level	X	Local Control Panel	High-High/High	Local Control Panel
High Integrity Container Temperature	X	Local Control Panel	High	Local Control Panel
Breakpot				
Breakpot Level	X	Radwaste Control Room	High	Radwaste Control Room
Spent Resin Transfer				
Turbidity Meter	X	Radwaste Control Room	NA	NA

Table 11.4-7 Typical Service Level II Concrete Systems Epoxy Coatings

Coatings	DFT	Specific Permeability	
		$g/m^2/mil/24hrs$	$g/m^2/mil/24hrs$
No. 5500 Kolor-poxy self leveling floor coating	40 mils	0.6	2.2
No. 3500 Kolor-poxy self-priming surf. Enamel	16 mils	2.7	10.5
No. 3200 Kolor-poxy white primer	9 mils	2.2	8.7
N-series Neothane Enamel	7 mils	18.0	70.9

Table 11.4-8 Component Classification

Component	Safety Classification
Spent Resin Storage Tank	RW IIa
Fillhead	RW IIc
Breakpot Tank	RW IIc
De-watering Vacuum pump	RW IIc
Sludge Pump	RW IIc

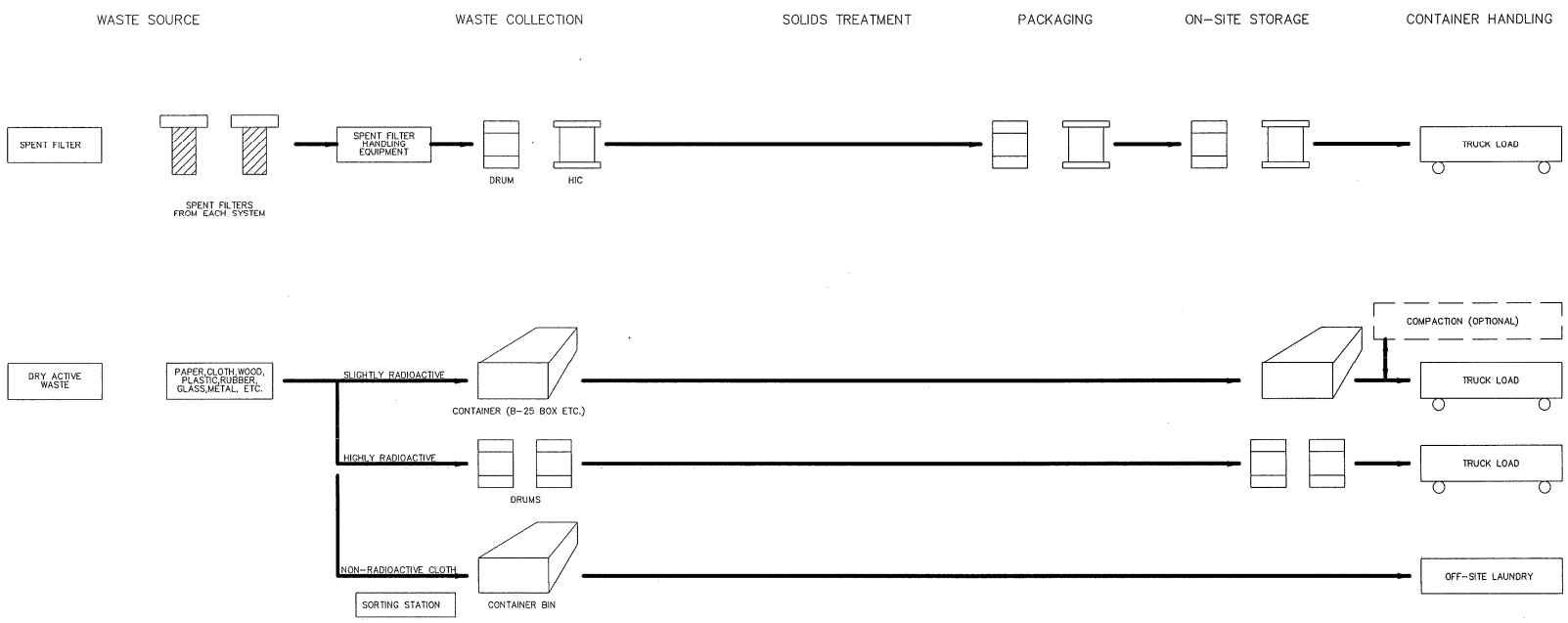

Figure 11.4-1 Process Flow Diagram of SWMS Dry Active Waste and Spent Filter Handling Sub-system

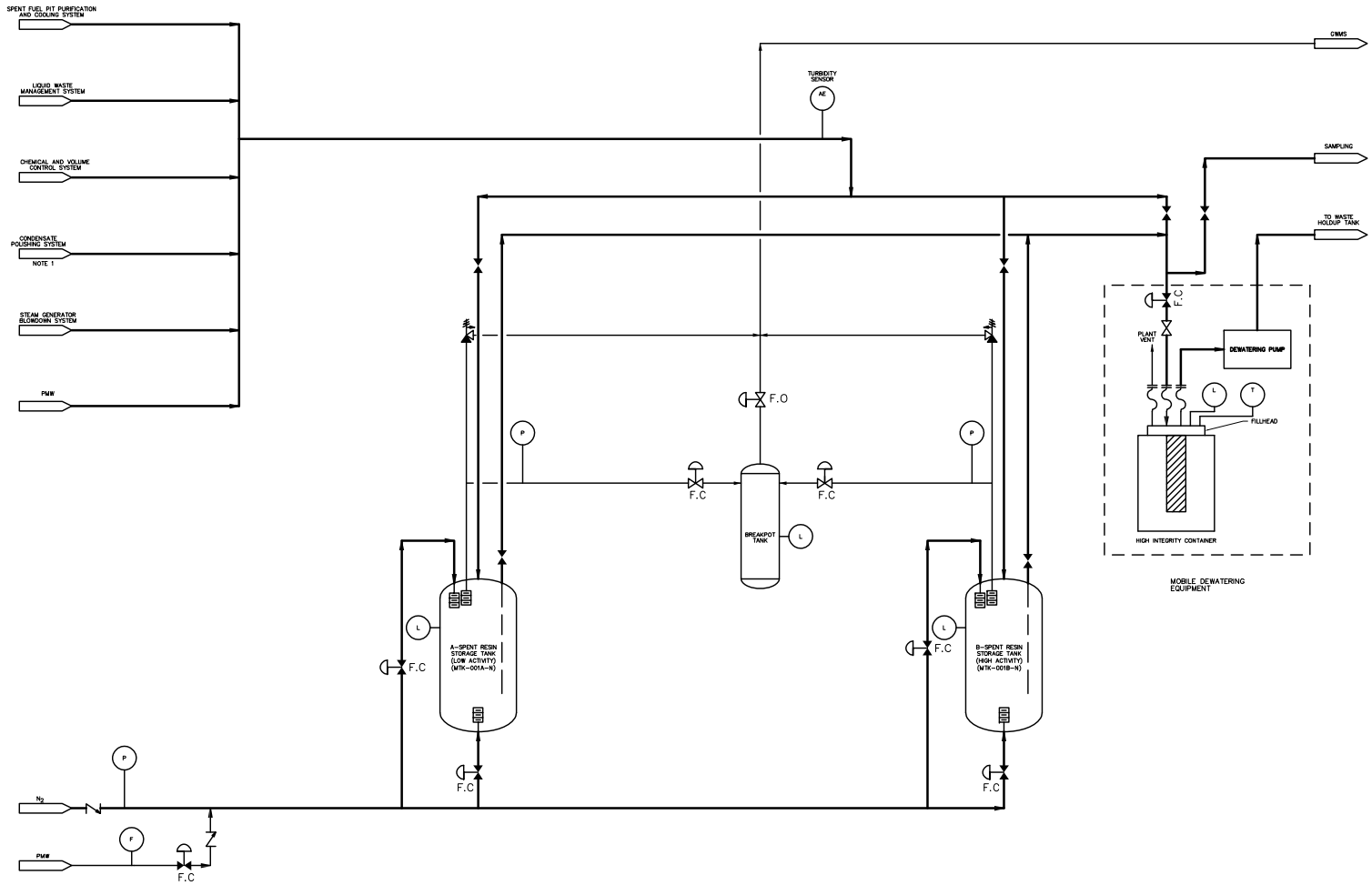

Figure 11.4-2 Process Flow Diagram of SWMS Spent Resin and Charcoal Handling Sub-System

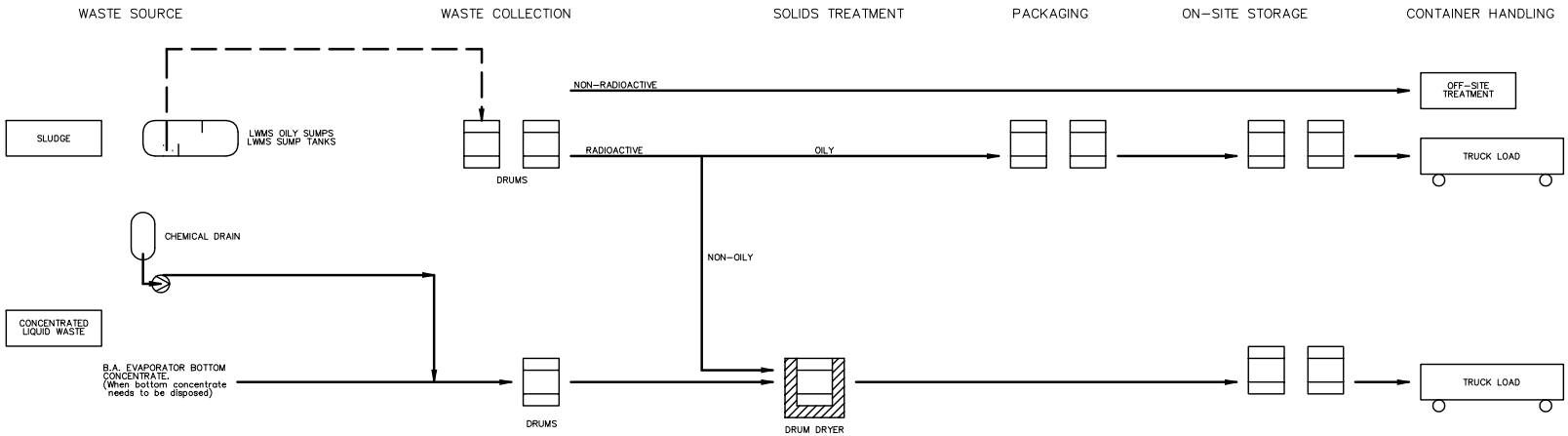

Figure 11.4-3 Process Flow Diagram of SWMS Oil and Sludge Handling System

11.5 Process Effluent Radiation Monitoring and Sampling Systems

The process effluent radiation monitoring and sampling system is designed to:

- Sample, measure, control, and record the radioactivity levels of selected process streams within the plant and effluent streams released into the environment
- Activate alarms and control releases of radioactivity
- Provide data to keep doses to workers ALARA
- Provide process data to support plant operation

The process and effluent radiological monitoring and sampling system is used to verify that releases to the environment are within the dose limit of 10 CFR 20.1301 (Ref. 11.5-1), 10 CFR 20.1302 (Ref. 11.5-2), and are within the numerical guidelines of 10 CFR 50, Appendix I (Ref. 11.5-3). The process and effluent radiological monitoring and sampling system is designed to perform its monitoring and recording functions during normal operation, AOOs, and under post-accident conditions, when and where required. Individual instruments of the process and effluent radiological monitoring and sampling system are designed to either monitor or collect samples from the gaseous and liquid streams at key process locations. All potential release points are either monitored or sampled in accordance with 10 CFR 50.34 (f)(2)(xvii) (Ref. 11.5-4). Data from these monitors is used to support the preparation of the radiological release reports required by 10 CFR 50.36a (Ref. 11.5-5).

Grab samples at key locations are taken for chemical and radiological analyses to confirm isotopic compositions and radiation levels. The grab sampling locations, methodology, analysis objectives, and frequencies are described in Chapter 9, Subsection 9.3.2.

Schematics of the monitors, including the sampling features, are presented in Figures 11.5-1a through 11.5-1j. Locations of the monitors are presented in Figures 11.5-2a through 11.5-2k.

The COL Applicant is responsible for the additional site-specific aspects of the process and effluent monitoring and sampling system beyond the standard design, in accordance with RGs 1.21, 1.33 and 4.15 (Ref. 11.5-12, 11.5-17, 11.5-14).

11.5.1 Design Bases

11.5.1.1 Design Objective

The design objective of the process and effluent radiological monitoring and sampling system is to provide process data to support plant operation through monitoring, sampling, measuring, controlling, and recording of the radioactivity levels of selected process streams within the plant and effluent streams released into the environment. The system is also used to activate alarms. The process effluent radiation monitoring and sampling system (PERMS) is designed to perform its monitoring and controlling functions during normal operation, including AOOs, and in post-accident conditions, when and

where required. Monitoring systems that have post-accident monitoring functions are described in Chapter 7, Section 7.5.

11.5.1.2 Design Criteria

The process and effluent radiological monitoring and sampling system is designed to meet the following NRC regulations:

- Monitor the radioactivity in plant radiological effluents released to unrestricted areas during normal plant operations and AOOs in accordance with 10 CFR 20.1302 (Ref. 11.5-2) so that the dose limits to the public do not exceed those stated in 10 CFR 20.1301 (Ref. 11.5-1) and 10 CFR 20.1302 (Ref. 11.5-2).

- Provide state-of-the-art monitoring, sampling equipment, and controls to assist in the safe operation of the plant.

- Provide state-of-the-art monitoring, sampling equipment, and controls so that doses in unrestricted areas from liquid and gaseous effluents are ALARA and in accordance with 10 CFR 50.34a (Ref. 11.5-6), and within the limits stated in 10 CFR 50, Appendix I (Ref. 11.5-3).

- Provide state-of–the-art monitoring and sampling equipment for the liquid and gaseous effluents from the plant systems for the preparation of annual release reports of nuclides to unrestricted areas as described in 10 CFR 50.36a (Ref. 11.5-5).

- Provide operational data to minimize the potential for the contamination of the facility and of the environment, as well as to minimize the generation of radioactive waste in accordance with 10 CFR 20.1406 (Ref. 11.5-7).

- Control the release of liquid and gaseous effluents from the plant systems in accordance with 10 CFR 50, Appendix A, GDC 60(Ref. 11.5-8).

- Provide monitoring and sampling of fuel storage areas, fuel handling areas, and radioactive waste systems to detect conditions that may result in the loss of residual heat removal and/or excessive radiation levels per the requirements of GDC 63 (Ref. 11.5-8). The monitoring and sampling systems shall also activate appropriate safety controls.

- Provide monitoring and sampling of the reactor containment atmosphere, the spaces containing components for the recirculation of loss of coolant accident fluids, effluent discharge paths, and the plant environs for radioactivity that may be released from normal operations, AOOs, and under post-accident conditions in accordance with the requirements of GDC 64 (Ref. 11.5-8).

- Provide monitoring and sampling instruments to measure and record radiation levels and quantities of noble gases at all potential release points in accordance with the requirements of 10 CFR 50.34(f)(2)(xvii) (Ref. 11.5-4). Continuous

monitoring and sampling of radioactive iodine and particulates in gaseous effluents from all potential accident release points are performed.

- Provide monitoring capability for in-plant radiation and airborne radioactivity for a broad range of routine and accident conditions in accordance with the requirements of 10 CFR 50.34(f)(2) (xvii) and 50.34(f)(2)(xxvii) (Ref. 11.5-4).

- Provide monitoring and sampling capabilities to assure plant systems operate as they are designed and installed in accordance with the requirements of 10 CFR 52.47(b)(1) (Ref. 11.5-9).

- Provide capabilities to detect, monitor, quantify, and identify leakage into the containment from the RCS in accordance with the requirements of RG 1.45 (Ref. 11.5-31) and ANSI N42.18-2004 (Ref. 11.5-11).

The process and effluent radiological monitoring and sampling system described herein is used for detailed design. The process and effluent radiological monitoring and sampling system is designed to meet the applicable requirements of ANSI N13.1-1999 (Ref. 11.5-10), ANSI N42.18-2004 (Ref. 11.5-11), RG 1.21 (Ref. 11.5-12), RG 1.33 (Ref. 11.5-17), RG 1.97 (Ref. 11.5-13), RG 4.15 (Ref. 11.5-14), NUREG-0718 (Ref. 11.5-32), NUREG-0800 BTP 7-10 and NUREG-0800 Appendix 11.5-A (Ref. 11.5-15).

11.5.2 System Descriptions

11.5.2.1 Process and Effluent Radiological Monitoring and Sampling System

The process and effluent radiological monitoring and sampling system is comprised of various distributed sets of radiation monitors each of which consists of sample collectors, detectors, and a radiation processor, with the exception of line monitors which have no sampling component. Each sample collector and the associated radiation detector, contained in one integral unit is shielded to minimize radiation from background and adjacent equipment. This design consideration is in conformance with the RG 1.45 requirement to minimize the effect of local ambient radiation. The radiation detectors send information to the radiation processors, which are used to determine the concentration of radioactive material in the monitored stream. The processor serves as the data collection center where data is received, processed, and stored. Additionally, the processor maintains a continuous display of the radiation levels for each monitored system and transmits alarm signals in the event that radiation levels exceed the predetermined setpoints. Data and alarm signals are transmitted to the MCR and made accessible to plant operators, in conformance with the requirements of RG 1.45.

The process and effluent radiological monitoring and sampling system measures, analyzes, and displays the radioactivity levels for the main process and effluent streams as described below.

- Liquid process streams that are radioactive or have the potential of becoming radioactive from cross-contamination

- Gaseous process streams that are radioactive or have the potential of becoming radioactive from cross-contamination
- Liquid effluent streams that are radioactive or have the potential of becoming radioactive from cross-contamination
- Gaseous effluent streams that are radioactive or have the potential of becoming radioactive from cross-contamination

The radiation monitors and samplers are summarized in the following tables:

- Table 11.5-1 Process Gas and Particulate Monitors
- Table 11.5-2 Process Liquid Monitors
- Table 11.5-3 Effluent Gas Monitors
- Table 11.5-4 Effluent Liquid Monitors
- Table 11.5-5 Samplers

The process configurations for the radiation monitors are schematically presented in Figures 11.5-1a through 11.5-1j. The locations of the monitors are identified in the general arrangement drawings in Figures 11.5-2a through 11.5-2k. The locations of the sampling points and stations are discussed in Chapter 9, Subsection 9.3.2. The locations of the sampling points are chosen to assure a representative sample in conformance with RG 1.45 and ANSI N42.18-2004.

The types of monitors and their ranges are listed in Tables 11.5-1 through 11.5-4. The ranges are based on expected operating ranges for this design and industrial experience. The setpoints for the trips and alarms associated with the monitors are based on specific detail design.

Descriptions of provisions for purging grab sample lines, representative sampling, and frequency of sampling are described in Chapter 9, Subsection 9.3.2. Sampling analytical results are used to calibrate the monitoring instrumentation for normal operation and AOOs. Sampling analytical results are used to assess the plant status during post-accident events.

11.5.2.2 Process Gas and Particulate Monitors Component Description

11.5.2.2.1 Containment Radiation Monitors (RMS-RE-041 and RMS-RE-040)

The two containment radiation monitors are a beta (β)-scintillation (RMS-RE-041) and a gamma (γ) (RMS-RE-040) monitor. The detection ranges and other details are summarized in Table 11.5-1, item numbers 1 and 2, respectively. The process configuration for these monitors is shown in Figure 11.5-1a. These monitors are in the R/B as shown in Figure 11.5-2h.

Monitors RMS-RE-041 and RMS-RE-040 comprise a set: RMS-RE-040 measuring the radiation level in the particulate and RMS-RE-041 measuring the radiation level in the gas stream from the containment atmosphere. A sample of the containment atmosphere is continuously drawn into the mixing chamber for monitoring and the sample is returned back to the containment by a sample blower. Detection of radiation above a predetermined setpoint activates an alarm in the MCR for operator actions and will automatically close the containment isolation valves on the containment purge ventilation system.

The containment radiation monitor used to detect leakage into the containment from the RCS has a range which is determined to have the capability of detecting less than 0.5 gpm leakage within one hour of response time. This determination is made by applying an activity balance based on the containment radioactivity concentration analysis and showing that this equation, as a function of time, represents an activity leak rate that is within the selected range for the monitor. This capability is met whether a realistic (as required by RG 1.45) or design basis primary coolant radioactive concentration is used.

A piping tap is provided for purging and cleaning of the monitors. The monitors are not safety-related.

The containment sampler is installed for the collection of iodine, particulate and tritium in the containment atmosphere. The detection ranges and other details are summarized in Table 11.5-5.

11.5.2.2.2 Containment Low Volume Purge Radiation Gas Monitor (RMS-RE-023)

The containment low volume purge radiation gas monitor is a β-scintillation monitor. The detection range and other details are summarized in Table 11.5-1, item number 3. The process configuration for this monitor is shown in Figure 11.5-1b. The monitor is located in the R/B as shown in Figure 11.5-2h.

This monitor is used to examine the radiation level in the containment air purges. During containment purges, an air sample of the airflow is continuously drawn into the mixing chamber for monitoring and the sample is returned back downstream of the duct via a small sample blower. If radiation is detected above the setpoint, an alarm is activated in the MCR for operator actions.

A piping tap is provided for purging and cleaning of the monitor. The monitor is not safety-related and does not perform any safety functions.

11.5.2.2.3 Containment Exhaust Radiation Gas Monitor (RMS-RE-022)

The containment exhaust radiation gas monitor is a β-scintillation monitor. The detection range and other details are summarized in Table 11.5-1, item number 4. The process configuration for the monitor is schematically shown in Figure 11.5-1b. The monitor is located in the R/B as shown in Figure 11.5-2h.

This monitor measures the radiation level of the containment exhaust system. The exhaust is drawn into the mixing chamber and its radiation level is measured. An alarm is

activated in the MCR when the radiation level in the exhaust exceeds a predetermined setpoint.

A piping tap is provided for the purging and cleaning of the monitor. The monitor is not safety-related and does not perform any safety functions.

11.5.2.2.4 Main Steam Line Radiation Monitors (RMS-RE-065A, RMS-RE-065B, RMS-RE-066A, RMS-RE-066B, RMS-RE-067A, RMS-RE-067B, RMS-RE-068A, RMS-RE-068B, RMS-RE-087, RMS-RE-088, RMS-RE-089, and RMS-RE-090)

The main steam line monitors are γ monitors. The detection ranges and other details are summarized in Table 11.5-1, item numbers 5 and 6. The process configuration of the monitor is schematically presented in Figure 11.5-1c. The monitors are located in the R/B as shown in Figure 11.5-2i.

The monitors continuously measure the concentration of radioactive materials in the main steam line from the SG. Monitors are provided on each main steam line. The main steam line radiation monitor detectors and other instruments will be placed outside of the main steam lines, detecting radioactive nuclides gamma ray emissions which come through the wall of the main steam line pipe. Hence, the monitors will be protected from the high temperature and humidity of main steam. High sensitivity main steam line(N-16ch.) monitor is used for measuring the concentration of N-16 in the main steam line during normal operation (RMS-RE-065A, RMS-RE-065B, RMS-RE-066A, RMS-RE-066B, RMS-RE-067A, RMS-RE-067B, RMS-RE-068A and RMS-RE-068B). If the measured concentrations exceed the predetermined setpoint, an alarm is activated in the MCR. The main steam line is normally expected to be slightly radioactive. High levels of radioactive material in the line indicate a leakage of reactor coolant in a SG. Main steam line monitor measures the concentration of radioactive materials during the accident (RMS-RE-087, RMS-RE-088, RMS-RE-089, and RMS-RE-090).

The monitors are not safety-related and do not perform any safety functions.

The detectors will be shielded to minimize the effect of gamma radiation (due to high-energy gamma radiation on the response of main steam line monitors located near one another) and also to minimize ambient radiation effects from direct or scattered radiation during LOCA conditions regarding the response of main steam line monitors located near containment penetrations.

11.5.2.2.5 Gaseous Radwaste Discharge Monitor (RMS-RE-072)

The gaseous radwaste discharge monitor is a γ monitor; the detection range and other details are summarized in Table 11.5-1, item number 7. The process configuration of the monitor is schematically presented in Figure 11.5-1d. The monitor is located downstream of the charcoal beds in the A/B as shown in Figure 11.5-2a.

This monitor is an inline monitor and measures the concentration of radioactive material from the charcoal adsorber in the GWMS. The monitor measures the activities in gaseous effluent before it reaches the plant vent. Detection of radioactivity levels in the stream exceeding the predetermined setpoint automatically closes the discharge valve to isolate

the discharge stream, and activates an alarm in the MCR and the A/B control room for operator actions. The gaseous discharge operation is terminated and the gas is recycled for additional processing.

The monitor is not safety-related and does not perform any safety functions.

11.5.2.2.6 Main Control Room Outside Air Intake Radiation Monitors (RMS-RE-084A, RMS-RE-084B, RMS-RE-085A, RMS-RE-085B, RMS-RE-083A, RMS-RE-083B)

The Main control room outside air intake radiation monitors are β-scintillation (RMS-RE-084A, RMS-RE-084B) and γ (RMS-RE-085A, RMS-RE-085B, RMS-RE-083A, RMS-RE-083B). The detection ranges and other details are summarized in Table 11.5-1, item numbers 8, 9, and 10. The process configuration of the monitors is schematically presented in Figure 11.5-1e. The monitors are located in the R/B, as shown in Figure 11.5-2g.

Three radiation monitors comprise a monitoring set. One monitor is a radioactive gas detector (RMS-RE-084A/RMS-RE-084B), one monitor is an iodine detector (RMS-RE-085A/RMS-RE-085B), and one monitor is a particulate detector (RMS-RE-083A/RMS-RE-083B). There are two sets of monitors (RMS-RE-084A, RMS-RE-085A, and RMS-RE-083A; and RMS-RE-084B, RMS-RE-085B, and RMS-RE-083B). An air sample is continuously drawn into the chamber where the radiation levels are monitored: first the particulate, then the gas. A parallel sample is drawn into the iodine monitor. Both samples are returned back to the stream downstream of the sample point. Detection of radioactivity levels in the stream exceeding the predetermined setpoints automatically activates signals to start the main control room isolation, and activates an alarm in the MCR for operator actions.

Piping taps are provided for the purging and cleaning of the monitors. These monitor sets are safety-related and are connected to the emergency power supply system. The redundant monitor sets have independent backup power units.

The Main Control Room Outside Air Intake Radiation Monitors are part of the ESF Systems described in Section 7.3. The I&C design of the ESF Systems, including the Main Control Room Outside Air Intake Radiation Monitors, conform to the requirements of IEEE Standard 603-1991.

11.5.2.2.7 TSC Outside Air Intake Radiation Monitors (RMS-RE-100, RMS-RE-101 and RMS-RE-102)

The TSC outside air intake radiation monitors are β-scintillation (RMS-RE-101) and γ (RMS-RE-100, and RMS-RE-102). The detection ranges and other details are summarized in Table 11.5-1, item numbers 11, 12, and 13. The process configuration of the monitors is schematically presented in Figure 11.5-1e. The monitors are located in the A/B as shown in Figure 11.5-2g.

Three radiation monitors comprise a monitoring set. One monitor is a radioactive gas detector (RMS-RE-101), one monitor is an iodine detector (RMS-RE-102), and one monitor is a particulate detector (RMS-RE-100). An air sample is continuously drawn into

the chamber where the radiation levels are monitored: first the particulate, then the gas. A parallel sample is drawn into the iodine monitor. Both samples are returned back to the stream downstream of the sample point. Detection of radioactivity levels in the stream exceeding the predetermined setpoints automatically activates signals to start technical support center isolation, and activates an alarm in the MCR for operator actions.

Piping taps are provided for the purging and cleaning of the monitors. These monitor sets are not safety-related and do not perform any safety function.

11.5.2.3 Process Liquid Monitors Component Description

11.5.2.3.1 CCW Radiation Monitors (RMS-RE-056A and RMS-RE-056B)

The CCW radiation monitors are γ monitors; their detection range, and other details are summarized in Table 11.5-2, item number 14. The process configuration of the monitors are schematically presented in Figure 11.5-1f. The monitors are located in the R/B as shown in Figure 11.5-2a.

These monitors measure the radiation level in the CCW due to potential contamination of radioactive material in the CCWS. The CCW is not normally expected to be radioactive. Detection of radioactive material in the CCW stream is an indication of leakage within the heat exchange equipment. Two monitors are provided one for each of the two CCW trains and is located upstream of the CCW pump. Detection of radiation exceeding the predetermined setpoints automatically activates an alarm in the MCR for operator actions and also activates closure of the vent valve of component cooling water surge tank.

Piping taps are provided for the purging and cleaning of the monitors. The monitors are not safety-related and do not perform any safety function.

11.5.2.3.2 Auxiliary Steam Condensate Water Radiation Monitor (RMS-RE-057)

The auxiliary steam condensate water radiation monitor is a γ monitor; the detection range and other details are summarized in Table 11.5-2, item number 15. The process configuration of the monitor is schematically presented in Figure 11.5-1f. The monitor is located in the A/B as shown in Figure 11.5-2a.

The auxiliary steam condensate water radiation monitor measures the concentration of radioactive material contained in the auxiliary steam system condensate from components such as the boric acid evaporator in the CVCS. Detection of radioactive material exceeding the setpoint is an indication of leakage from the components to the auxiliary steam system, and automatically activates an alarm in the MCR for operator actions and also activates the closure the auxiliary steam condensate header isolation valve and turn off the auxiliary steam drain tank pumps.

A piping tap is provided for the purging and cleaning of the monitor. The monitor is not safety-related and does not perform any safety functions.

11.5.2.3.3 Primary Coolant Radiation Monitor (RMS-RE-070)

The primary coolant monitor is a γ monitor; the detection range and other details are summarized in Table 11.5-2, item number 16. The process configuration of the monitor is

schematically presented in Figure 11.5-1c. The primary coolant radiation monitor is located downstream of the CVCS letdown heat exchanger in the R/B as shown in Figure 11.5-2e.

This monitor measures the concentration of radioactive material in the CVCS line. The primary coolant radiation monitor is used to detect high levels of radioactivity in the stream from the RCS, during normal operation, AOOs, and following design basis accidents. A high level of radiation indicates the potential for fuel cladding failure, and an alarm signal is activated in the MCR for operator actions.

A piping tap is provided for the purging and cleaning of the monitor. The monitor is not safety-related and does not perform any safety functions.

11.5.2.3.4 Turbine Building Floor Drain Radiation Monitor (RMS-RE-058)

The turbine building (T/B) floor drain radiation monitor is a γ monitor; the detection range and other details are summarized in Table 11.5-2, item number 17. The process configuration of the monitor is schematically presented in Figure 11.5-1g. The monitor is located in the T/B as shown in Figure 11.5-2c.

The T/B floor drain sump collects drainage from the steam turbine area. The sump is equipped with a pump that is automatically activated when the liquid level in the sump is at a predetermined level. The T/B floor drain monitor is located at the discharge side of the sump pump, which circulates the sump content. Normally, the T/B floor drainage is not expected to be radioactive and the liquid is pumped to non-radioactive liquid waste treatment system for removal of potential oil contaminants. Detection of radiation above a predetermined setpoint activates an alarm in the MCR for operator actions and also activates the pump to pump the liquid to the LWMS for processing.

A piping tap is provided for the purging and cleaning of the monitor. The monitor is not safety-related and does not perform any safety functions.

11.5.2.3.5 SG Blowdown Water Radiation Monitor (RMS-RE-055)

The SG blowdown water radiation monitor is a γ monitor; the detection range and other details are summarized in Table 11.5-2, item number 18. The process configuration of the monitor is schematically presented in Figure 11.5-1d. The monitor is located in the R/B as shown in Figure 11.5-2h. The monitor is located downstream of the SG blowdown sample coolers.

This monitor measures the radiation level in the SG blowdown water after it is cooled and before it enters the flash tank. A sample from each of the four loops is further cooled by a sample cooler. The four streams are then combined and their radiation level is monitored. If required, the individual stream is monitored for contamination. The SG blowdown water is normally expected to be slightly radioactive. Detection of radiological content in this sample indicates that a leak has occurred between the primary and secondary side of the SG. A measured concentration exceeding the predetermined setpoint activates an alarm in the MCR for operator actions and also activates the closure of the blowdown control valves.

The monitor is not safety-related and does not perform any safety functions.

11.5.2.3.6 SG Blowdown Return Water Radiation Monitor (RMS-RE-036)

The SG blowdown return water radiation monitor is a γ monitor; the detection range and other details are summarized in Table 11.5-2, item number 19. The process configuration of the monitor is schematically presented in Figure 11.5-1d. The monitor is located in the R/B as shown in Figure 11.5-2e. The monitor is located downstream of the SG demineralizer outlet.

This monitor measures the radiation level in the SG blowdown water after it is treated and before it is returned into the condensate storage tank. A sample from the SG blowdown mix bed demineralizers is sampled for radiation monitoring. Normally the treated SG blowdown water is slightly radioactive. In the event of significant primary-to-secondary system leakage due to a SG tube leak, it is possible that the SG blowdown liquid may be contaminated with radioactive material. Detection of radiation above a predetermined setpoint activates an alarm in the MCR for operator actions, including automatically closing of the valve to transfer the treated liquid to the condensate storage tank. Plant personnel are required to manually sample the SG blowdown water for analysis. If it is confirmed that the liquid is contaminated, the liquid is routed to the LWMS for processing.

The monitor is not safety-related and does not perform any safety functions.

11.5.2.4 Effluent Gaseous Monitors Component Description

11.5.2.4.1 Plant Vent Radiation Gas Monitors (RMS-RE-021A, RMS-RE-021B, RMS-RE-080A and RMS-RE-080B)

The plant vent radiation gas monitors are β (RMS-RE-021A,RMS-RE-021B) and β/γ (RMS-RE-080A, and RMS-RE-080B) monitors; the detection range and other details are summarized in Table 11.5-3, item numbers 20, 21, and 22. There are a total of four monitors: two for normal range (RMS-RE-021A/B), one for mid range (RMS-RE-080A), and one for high range (RMS-RE-080B). The process configuration of the monitors is schematically presented in Figure 11.5-1h. The monitors are located in the R/B as shown in Figure 11.5-2h.

The plant vent radiation gas monitor (RMS-RE-021A) measures the concentration of radioactive gases released through the vent stack during normal operation. The monitoring of this gaseous effluent stream assures that the radiological releases are kept ALARA. The normal range monitor (RMS-RE-021B) and the extended range monitors (RMS-RE-080A, and RMS-RE-080B) work together under post-accident conditions. Detection of radiation above a predetermined setpoint activates an alarm in the MCR for operator actions and also activates the closure of the discharge valve to isolate the GWMS discharge stream and containment ventilation isolation.

Piping taps are provided for the purging and cleaning of the monitors. The monitors are not safety-related.

The plant vent sampler is installed for collection of iodine, particulate and tritium released through the vent stack. The detection ranges and other details are summarized in Table 11.5-5.

Plant vent sampler (accident sampler) is installed for collection of particulate and halogen released through the vent stack during the accident. The detection ranges and other details are summarized in Table 11.5-5.

11.5.2.4.2 Condenser Vacuum Pump Exhaust Line Radiation Monitors (RMS-RE-043A, RMS-RE-043B, RMS-RE-081A and RMS-RE-081B)

The condenser vacuum pump exhaust line radiation monitors are β (RMS-RE-043A and RMS-RE-043B) and β/γ (RMS-RE-081A and RMS-RE-081B) monitors: the detection range and other details are summarized in Table 11.5-3, item numbers 23, 24, 25. There are a total of four monitors: two for normal range (RMS-RE-043A/B), one for mid-range (RMS-RE-081A), and one for high-range (RMS-RE-081B). The process configuration of the monitors is schematically presented in Figure 11.5-1i. The monitors are located in the T/B as shown in Figure 11.5-2c.

These monitors measure the concentration of radioactive gas contained in the exhaust gas from the condenser vacuum pumps. This monitor is used to detect leakage from the RCS to the secondary coolant system. Gas from the condenser vacuum pumps is normally expected to be slightly radioactive.

The condenser vacuum pump exhaust line radiation monitors are the primary monitors used to estimate the primary-to-secondary leakage rate. The primary-to-secondary leakage rate can be estimated by comparing the fission gas activity, for an isotope such as Xe-133, in the condenser exhaust gas to the fission gas activity in the reactor coolant system (RCS). When fission gas concentrations are low in the RCS, other isotopes such as Ar-41 can be used, taking into consideration the effect of their shorter half-lives. The condenser vacuum pump exhaust line radiation monitors have a range which is determined to have the capability of detecting 30 gpd leakage. This determination is made by applying the basic relationship for leak rate measurements based on the condenser off-gas analysis as provided in Section 5.2 and Appendix B of the EPRI guideline, “PWR Primary-to-Secondary Leak Guidelines (Ref. 11.5-34).

The non-condensable gases are removed from the main condenser and vented by the vacuum pumps to the atmosphere. A sample is continuously drawn from the exhaust for monitoring prior to venting to the environment. Detection of radiation above a predetermined setpoint activates an alarm in the MCR for operator actions and also activates the closure of the steam generator blowdown isolation valves.

Piping taps are provided for the purging and cleaning of the monitors. The monitors are not safety-related and do not perform any safety function.

11.5.2.4.3 Gss Exhaust Fan Discharge Line Radiation Monitors (RMS-RE-044A, RMS-RE-044B, RMS-RE-082A and RMS-RE-082B)

The Gss exhaust fan discharge line radiation monitors are β (RMS-RE-044A and RMS-RE-044B) and β/γ (RMS-RE-082A and RMS-RE-082B) type monitors; the detection

range and other details are summarized in Table 11.5-3, item numbers 26, 27, and 28. There are a total of four monitors: two for normal range (RMS-RE-044A/B), one for mid-range (RMS-RE-082A) and one for high-range (RMS-RE-082B). The process configuration of the monitors is schematically presented in Figure 11.5-1j. The monitors are located in the T/B as shown in Figure 11.5-2g.

The mixture of non-condensable gases discharged from the gland steam condenser exhaust fan is not normally radioactive; however, in the event of significant primary-to-secondary system leakage due to a SG tube leak, it is possible that the gaseous mixture may be contaminated with radioactive gases. Detection of radiation above a predetermined setpoint activates an alarm in the MCR for operator actions.

Piping taps are provided for the purging and cleaning of the monitor. The monitors are not safety-related.

11.5.2.5 Effluent Liquid Monitor Component Description

11.5.2.5.1 Liquid Radwaste Discharge Radiation Monitor (RMS-RE-035)

The liquid radwaste discharge radiation monitor is a γ monitor; the detection range and other details are summarized in Table 11.5-4, item number 29. A process schematic for this monitor is shown in Figure 11.5-1d. The monitor for liquid radwaste discharge is located in the A/B as shown in Figure 11.5-2a.

This monitor is located downstream of the sample tanks and pumps in the LWMS (refer to Section 11.2). RMS-RE-035 measures the total gamma content in the discharge stream of the LWMS. The monitor is an inline monitor, measuring the liquid discharge stream before it reaches the discharge header. As discussed in Section 11.2, the treated liquid is normally recycled for plant use. If there is a surplus of liquid, then the water is discharged. The discharge valve is under supervisory control and requires approval to open for discharge. Detection of radioactivity levels in the stream exceeding the predetermined setpoint, automatically shuts off the monitor pump and automatically activates an alarm in the MCR and also automatically closes the discharge valve. These discharge valves are designed to open only when actuated by the radiation monitor for acceptable range for discharge. These valves normally stay close with all other conditions, including high radiation level and/or lack of signal (loss of power supply and/or radiation monitor failure).

The monitor is not safety-related and does not perform any safety function.

11.5.2.5.2 ESW Radiation Monitoring and Sampling System (RMS-RE-074A, RMS-RE-074B, RMS-RE-074C, RMS-RE-074D)

The ESW radiation monitors are γ monitors; their detection range, and other details as summarized in Table 11.5-4, item number 30. The process configuration of the monitor is schematically presented in Figure 11.5-1f. The monitors are located in the R/B as shown in Figure 11.5-2a.

These monitors measure the radiation level in the essential service water (ESW) due to potential contamination of radioactive material in the essential service water system

(ESWS). The ESW is not normally expected to be radioactive. Detection of radioactive material in the ESW stream is an indication of leakage within the heat exchange equipment. Four monitors are provided: one for each of the four ESW trains and is located downstream of the ESW pumps. Detection of radiation exceeding the predetermined setpoints automatically activates an alarm in the MCR for operator actions.

Piping taps are provided for the purging and cleaning of the monitors. The monitors are not safety-related and do not perform any safety function.

11.5.2.6 Reliability and Quality Assurance

The reliability of the process and effluent radiological monitoring and sampling system is based on providing redundant instruments, where required, and the use of manual sampling and analysis to verify the performance of the installed instruments.

To assure that quality assurance is maintained, only instruments designed and manufactured for the intended services, and instruments with industry-proven performances are used. Lessons learned regarding instrument reliability will be used in the final instrument selection. Safety-related monitoring instruments are qualified as described in Chapter 3, Section 3.11. Monitors that are not safety-related are designed in accordance with ANSI N42.18-2004 (Ref. 11.5-11), and are qualified in accordance with RG 1.143 Section IV (Ref. 11.5-16).

Calibration and inspection procedures are developed and put in place by the COL Applicant in accordance with RG 1.33 (Ref. 11.5-17) and RG 4.15 (Ref. 11.5-14). Inspections are conducted daily on the process and effluent monitoring and sampling system through observance of the system channels. Periodically, the system is further checked during the course of reactor operation through the implementation of a check source. The detector response is compared to the instrument's background count rate to determine functionality. Calibration of monitors is conducted through the use of known radionuclide sources as documented by national standards. Maintenance is conducted routinely on the monitoring and sampling system, which is easily accessible, as is the accompanying power supply. Electronic and sampling components undergo a full servicing, periodically, as detailed in the operational instructions in order to maintain consistent operation.

The COL Applicant is to develop procedures which are of inspection, decontamination, and replacement related to radiation monitoring instruments. The COL Applicant is to provide analytical procedures and sensitivity for selected radioanalytical methods and type of sampling media for site-specific matter.

11.5.2.7 Determination of Instrumentation Alarm Setpoints for Effluents

Alarm setpoints for effluent monitors follow site-specific requirements, such as release flow rates and associated conditions, operator response preferences, and detailed design radiation monitor selection. The alarm setpoints are developed during the detailed design stage by the COL Applicant in the offsite dose calculation manual. Setpoint determination will need to follow the guidance of NUREG-1301 (Ref. 11.5-21), and NUREG-0133 (Ref. 11.5-18) so that the effluent releases to unrestricted areas do not exceed those

given in 10 CFR 20, Appendix B, Table 2 (Ref. 11.5-19). Setpoint determinations will also consider local meteorological conditions.

11.5.2.8 Compliance with Effluent Release Requirements

The radiological monitoring and sampling systems are designed to assure compliance with the requirements of 10 CFR 20.1301 (Ref. 11.5-1), 10 CFR 20.1302 (Ref. 11.5-2), 10 CFR 20, Appendix B (Ref. 11.5-19), and 40 CFR 190 (Ref. 11.5-20), and the numerical design guidelines stated in 10 CFR 50, Appendix I (Ref. 11.5-3). The monitoring and sampling systems are designed to collect and analyze radiation readings to generate the annual radiological effluent release report required by 10 CFR 50.36a (Ref. 11.5-5). Site-specific procedures on equipment inspection, calibration, and maintenance, and by regulated recordkeeping are developed by the COL Applicant to meet the requirements of 10 CFR 20.1301 (Ref. 11.5-1) and 10 CFR 20.1302 (Ref. 11.5-2), and meet the numerical guidelines stated in 10 CFR 50, Appendix I (Ref. 11.5-3), but will also be able to comply with 10 CFR 50.34a (Ref. 11.5-6) and keep releases ALARA.

The COL Applicant is to develop procedures which are of inspection, decontamination, and replacement related to radiation monitoring instruments. The COL Applicant is to provide analytical procedures and sensitivity for selected radioanalytical methods and type of sampling media for site-specific matter.

11.5.2.9 Offsite Dose Calculation Manual

An offsite dose calculation manual that contains a description of the methodology and parameters used for calculation of offsite doses for the gaseous and liquid effluents will be prepared by the COL Applicant. The manual will also contain the planned effluent discharge flow rates and addresses the numerical guidelines stated in 10 CFR 50, Appendix I (Ref. 11.5-3). The manual will be produced in accordance with the guidance of NUREG-1301 (Ref. 11.5-21), and NUREG-0133 (Ref.11.5-18), and with the guidance of RG 1.109 (Ref. 11.5-22), RG 1.111 (Ref. 11.5-23), or RG 1.113 (Ref. 11.5-24). The manual will include a discussion of how the NUREGs, RGs, or alternative methods are implemented.

The COL Applicant is responsible for assuring the fulfillment of the guidelines issued in 10 CFR 50, Appendix I (Ref. 11.5-3) regarding the offsite doses released through gaseous and liquid effluent streams.

11.5.2.10 Radiological Environmental Monitoring Program

The COL Applicant is to develop a radiological and environmental monitoring program taking into consideration local land use census data in identifying all potential radiation dose pathways. The program will take into account associated radioactive materials present in liquid and gaseous effluents and direct external radiation from SSCs. The COL Applicant is to follow the guidance outlined in NUREG-1301 (Ref. 11.5-21), and NUREG-0133 (Ref. 11.5-18) when developing the radiological environmental monitoring program.

11.5.2.11 Site –Specific Cost-Benefit Analysis

RG1.110 provides compliance with 10 CFR 50, Appendix I (Ref. 11.5-3) numerical guidelines for offsite radiation doses as a result of gaseous or airborne radioactive effluents during normal operations, including AOOs. The cost-benefit numerical analysis as required by 10 CFR 50, Appendix I, Section II, Paragraph D (Ref. 11.5-3) demonstrates that the addition of items of reasonably demonstrated technology will not provide a favorable cost benefit.

The COL Applicant is to perform a site-specific cost-benefit analysis to demonstrate compliance with the regulatory requirements.

11.5.2.12 Basis of PERMS range

PERMS range is based on 10 CFR 20, Appendix B (Ref.11.5-19), RG 1.21 (Ref.11.5-12), RG 1.97 (Ref.11.5-13), RG 1.45 (Ref.11.5-31) and operating experience.

11.5.3 Effluent Monitoring and Sampling

Radiological monitoring and sampling instruments are provided for containment air and following all effluent streams so that GDC 64 (Ref. 11.5-8) is met during normal operations, AOOs, and under post-accident conditions:

- plant vent
- main steam line (for post-accident conditions)
- T/B floor drain discharge line
- condenser vacuum pump exhaust line
- Gss exhaust fan discharge line
- liquid radwaste discharge line
- ESWS discharge line

Detectors of PERMS monitors are shielded to minimize the effect of external radiation.

The radiological monitoring and sampling instruments are designed as integrated assemblies, and operated such that the spread of contamination during sample preparation and analysis is minimized, and that the ALARA provisions of RGs 8.8 (Ref. 11.5-26) and 8.10 (Ref. 11.5-27) are implemented. This design approach assures compliance with the dose limits stated in 10 CFR 20.1201 (Ref. 11.5-28), 10 CFR 20.1202 (Ref. 11.5-29), and the concentration limits of 10 CFR 20, Appendix B, Table 1 (Ref. 11.5-19). The methods used and procedures followed to maintain ALARA personnel doses while performing sample preparation and analysis is discussed in the radiation protection program described in Chapter 12, Section 12.5.

The design also includes provisions for manual sampling at key locations to confirm the stream compositions and radiation levels, and to verify the performance and accuracy of the radiological monitors. The manual sampling locations, methodology, analysis objectives, and frequencies are included in Chapter 9, Subsection 9.3.2.

11.5.4 Process Monitoring and Sampling

Radiological monitoring and sampling instruments are provided for gaseous and liquid radwaste discharge streams so that GDC 63 (Ref. 11.5-8) is met.

Radiological monitoring and sampling instruments are provided on key process streams, which contain radioactive material, and those which may become radioactive through cross-contamination. These instruments provide early warning to plant operator to minimize radioactive wastes. The radwaste monitoring and sampling instruments include automatic isolation valves comply with GDC 60 (Ref. 11.5-8).

11.5.5 Combined License Information

COL 11.5 (1) *The COL Applicant is responsible for the addtional site-specific aspects of the process and effluent monitoring and sampling system beyond the standard design, in accordance with RGs 1.21, 1.33 and 4.15 (Ref. 11.5-12, 11.5-17, 11.5-14). Furthermore, the COL Applicant is responsible for assuring the fulfillment of the guidelines issued in 10 CFR 50, Appendix I (Ref. 11.5-3) regarding the offsite doses released through gaseous and liquid effluent streams.*

COL 11.5(2) *The COL Applicant is to prepare an offsite dose calculation manual to provide specific administrative controls and liquid and gaseous effluent source terms to limit the releases to site-specific requirements containing a description of the methods and parameters that drive to arrive radiation instrumentation alarm setpoint. The COL Applicant is to commit to follow the NEI generic template 07-09A (Ref. 11.5-30) as an alternative to providing the offsite dose calculation manual at the time of application.*

COL 11.5(3) *The COL Applicant is to develop a radiological and environmental monitoring program taking into consideration local land use and census data in identifying all potential radiation exposure pathways. The program shall take into account associated radioactive materials present in liquid and gaseous effluents and direct external radiation from SSCs. The COL Applicant is to follow the guidance outlined in NUREG-1301(Ref. 11.5-21), and NUREG-0133 (Ref. 11.5-18) when developing the radiological effluent monitoring program. The COL Applicant is to commit to follow the NEI generic template 07-09A (Ref. 11.5-30) as an alternative to providing the radiological effluent monitoring program at the time of application.*

COL 11.5(4) The COL Applicant is to develop procedures which are of inspection, decontamination, and replacement related to radiation monitoring instruments.

COL 11.5(5) The COL Applicant is to provide analytical procedures and sensitivity for selected radioanalytical methods and type of sampling media for site-specific matter.

COL 11.5(6) The COL Applicant is to perform a site-specific cost benefit analysis to demonstrate compliance with the regulatory requirements.

11.5.6 References

11.5-1 Dose limits for individual members of the public. NRC Regulations Title 10, Code of Federal Regulations, 10 CFR Part 20.1301.

11.5-2 Compliance with dose limits for individual members of the public. NRC Regulations Title 10, Code of Federal Regulations, 10 CFR Part 20.1302.

11.5-3 Numerical Guides for Design Objectives and Limiting Conditions for Operation to Meet the Criterion. NRC Regulations Title 10, Code of Federal Regulations, 10 CFR Part 50, Appendix I.

11.5-4 Contents of Construction Permit and Operating License Applications; Technical Information, NRC Regulations Title 10, Code of Federal Regulations, 10 CFR Part 50.34.

11.5-5 Technical Specifications on Effluents from Nuclear Power Reactors, NRC Regulations Title 10, Code of Federal Regulations, 10 CFR Part 50.36a.

11.5-6 Design Objectives for Equipment to Control Releases of Radioactive Material in Effluents--Nuclear Power Reactors, NRC Regulations Title 10, Code of Federal Regulations, 10 CFR Part 50.34a.

11.5-7 Minimization of contamination. NRC Regulations Title 10 Code of Federal Regulations, 10 CFR Part 20.1406.

11.5-8 General Design Criteria for Nuclear Power Plants, NRC Regulations Title 10, Code of Federal Regulations, 10 CFR Part 50, Appendix A, GDC 60, 63,64.

11.5-9 *Contents of Applications; Technical Information,* 'Standard Design Certifications, NRC Regulations Title 10, Code of Federal Regulations, 10 CFR Part 52.47(b)(1).

11.5-10 Sampling and Monitoring Releases of Airborne Radioactive Substances from the Stacks and Ducts of Nuclear Facilities. ANSI/HPS N13.1-1999, American National Standards Institute.

11.5-11 Specification and Performance of On-Site Instrumentation for Continuously Monitoring Radioactivity in Effluents. ANSI N42.18-2004, American National Standards Institute, 2004.

11.5-12 Measuring, Evaluating, and Reporting Radioactivity in Solid Wastes and Releases of Radioactive Materials in Liquid and Gaseous Effluents from Light-Water-Cooled Nuclear Power Plants. Regulatory Guide 1.21, Rev. 1,, June 1974.

11.5-13 Criteria For Accident Monitoring Instrumentation For Nuclear Power Plants. Regulatory Guide 1.97, Rev. 4, June 2006.

11.5-14 Quality Assurance for Radiological Monitoring Programs (Inception through Normal Operations to License Termination)—Effluent Streams and the Environment. Regulatory Guide 4.15, Rev. 2, July 2007.

11.5-15 U.S. Nuclear Regulatory Commission, Standard Review Plan for the Review of Safety Analysis Reports for Nuclear Power Plants, NUREG-0800, Washington DC.

11.5-16 U.S. Nuclear Regulatory Commission, Design Guidance for Radioactive Waste Management Systems, Structures, and Components Installed in Light-Water-Cooled Nuclear Power Plants. Regulatory Guide 1.143, Rev. 2, Washington, DC, November 2001.

11.5-17 U.S. Nuclear Regulatory Commission, Quality Assurance Program Requirements (Operation). Regulatory Guide 1.33. Washington, DC. February 1978.

11.5-18 U.S. Nuclear Regulatory Commission, Preparation of Radiological Effluent Technical Specifications for Nuclear Power Plants. NUREG-0133, Washington, DC.

11.5-19 U.S. Nuclear Regulatory Commission, 'Annual Limits on Intake (ALIs) and Derived Air Concentrations (DACs) of Radionuclides for Occupational Exposure; Effluent Concentrations; Concentrations for Release to Sewerage,' "Standards for Protection Against Radiation," Energy. Title 10, Code of Federal Regulations, Part 20, Appendix B, Washington, DC, December 2002.

11.5-20 U.S. Environmental Protection Agency, "Environmental Radiation Protection Standards for Nuclear Power Operations," Protection of Environment. Title 40, Code of Federal Regulations, Part 190, Washington, DC.

11.5-21 Offsite Dose Calculation Manual Guidance: Standard Radiological Effluent Controls for Pressurized Water Reactors. [This NUREG includes Generic Letter 89-01.], NUREG-1301.

11.5-22 Calculation of Annual Doses to Man from Routine Releases of Reactor Effluents for the Purpose of Evaluating Compliance with 10 Code of Federal Regulations Part 50, Appendix I. Regulatory Guide 1.109, Rev. 1, October 1977.

11.5-23 Methods for Estimating Atmospheric Transport and Dispersion of Gaseous Effluents in Routine Releases from Light-Water-Cooled Reactors. Regulatory Guide 1.111, Rev. 1,July 1977.

11.5-24 Estimating Aquatic Dispersion of Effluents from Accidental and Routine Reactor Releases for the Purpose of Implementing Appendix I. Regulatory Guide 1.113, Rev. 1, April 1977.

11.5-25 Deleted

11.5-26 Information Relevant to Ensuring that Occupational Radiation Exposures at Nuclear Power Stations Will Be as Low as Is Reasonably Achievable. Regulatory Guide 8.8.

11.5-27 Operating Philosophy for Maintaining Occupational Radiation Exposures as Low as Is Reasonably Achievable. Regulatory Guide 8.10, May 1977.

11.5-28 Occupational dose limits for adults. NRC Regulations Title 10 Code of Federal Regulations, 10 CFR Part 20.1201.

11.5-29 Compliance with requirements for summation of external and internal doses. NRC Regulations Title 10 Code of Federal Regulations, 10 CFR Part 20.1202.

11.5-30 NEI 07-09A, “Generic Template Guidance for Offsite Dose Calculation Manual Program Description,” Revision 0.

11.5-31 Guidance on Monitoring and Responding to Reactor Coolant System Leakage. Regulatory Guide 1.45, Revision 1, May 2008.

11.5-32 U.S. Nuclear Regulatory Commission, Licensing Requirements for Pending Applications for Construction Permits and Manufacturing Licenses, NUREG-0718.

11.5-33 Cost-Benefit Analysis for Radwaste Systems for Light-Water-Cooled Nuclear Power Reactors. Regulatory Guide 1.110, March 1976.

11.5-34 IEEE Standard Criteria for Safety Systems for Nuclear Power Generating Stations, IEEE Std 603-1991.

11.5-35 Electric Power Research Institute, “PWR Primary-to-Secondary Leak Guidelines,” Rev 3, December 2004.

Table 11.5-1 Process Gas and Particulate Monitors

Item No.	Monitor Number	Service	Type	Range $\mu Ci/cm^3$	Calibration Isotopes	Check Source	Safety-Related	Control Function	Quantity	Schematic Number	GA Drawing Number
1	RMS-RE-041	Containment radiation gas *The concentration of radioactive gas in the containment*	β Scint	5E-7 to 5E-3	Kr-85 Xe-133	Yes	No	Termination	1	11.5 – 1a	11.5 – 2h
2	RMS-RE-040	Containment radiation particulate *The concentration of radioactive particulate in the containment*	γ	1E-10 to 1E-6	Cs-137	Yes	No	Termination	1	11.5 – 1a	11.5 – 2h
3	RMS-RE-023	Containment low-volume purge radiation gas *The concentration of radioactive material in the duct of the Containment Depressurization Purge System*	β Scint	1E-6 to 1E-1	Kr-85 Xe-133	Yes	No	No	1	11.5 – 1b	11.5 – 2h
4	RMS-RE-022	Containment exhaust radiation gas *The concentration of radioactive material in the exhaust duct of the containment high volume purge system*	β Scint	1E-6 to 1E-1	Kr-85 Xe-133	Yes	No	No	1	11.5 – 1b	11.5 – 2h
5	RMS-RE-065A RMS-RE-065B RMS-RE-066A RMS-RE-066B RMS-RE-067A RMS-RE-067B RMS-RE-068A RMS-RE-068B	High sensitivity main steam line (N-16ch.) *The concentration of nitrogen-16 in the main steam line*	γ	1E-8 to 5E-3	---(1)	Yes	No	No	8	11.5 – 1c	11.5 – 2i
6	RMS-RE-087 RMS-RE-088 RMS-RE-089 RMS-RE-090	Main steam line *The concentration of radioactive material in the main steam line (in accident)*	γ	1E-1 to 1E+3	Cs-137	No(2)	No	No	4	11.5 -1c	11.5 – 2i
7	RMS-RE-072	Gaseous radwaste discharge *Radioactive material conc. discharged from the GWMS*	γ	1E-3 to 1E+1	Cs-137	Yes	No	Termination	1	11.5 – 1d	11.5 - 2a
8	RMS-RE-084A RMS-RE-084B	Main control room outside air intake gas radiation *The concentration of radioactive gas in the MCR (in accident)*	β Scint	1E-7 to 1E-2	Kr-85 Xe-133	Yes	Yes	Termination	2	11.5 – 1e	11.5 – 2g
9	RMS-RE-085A RMS-RE-085B	Main control room outside air intake iodine radiation *The concentration of radioactive iodine in the MCR (in accident)*	γ	1E-11 to 1E-5	I-131	Yes	Yes	Termination	2	11.5 – 1e	11.5 – 2g
10	RMS-RE-083A RMS-RE-083B	Main control room outside air intake particulate radiation *The concentration of radioactive particulate in the MCR (in accident)*	γ	1E-12 to 1E-7	Cs-137	Yes	Yes	Termination	2	11.5 – 1e	11.5 – 2g
11	RMS-RE-101	TSC outside air intake gas radiation *The concentration of radioactive gas in the TSC (in accident)*	β Scint	1E-7 to 1E-2	Kr-85 Xe-133	Yes	No	Termination	1	11.5 – 1e	11.5 – 2g
12	RMS-RE-102	TSC outside air intake iodine radiation *The concentration of radioactive iodine in the TSC (in accident)*	γ	1E-11 to 1E-5	I-131	Yes	No	Termination	1	11.5 – 1e	11.5 – 2g
13	RMS-RE-100	TSC outside air intake particulate radiation *The concentration of radioactive particulate in the TSC (in accident)*	γ	1E-12 to 1E-7	Cs-137	Yes	No	Termination	1	11.5 – 1e	11.5 – 2g

Notes (1) Calibration source and qualification process is provided by vendor recommendation during detailed design.
(2) The detector includes a radiation source which gives a detector output signal lower than the low limit of the measurement range. The output signal level of the detector is monitored in the signal processor. If the output level is lower than the set point, the signal processor will alarm to indicate failure of the monitor.

Table 11.5-2 Process Liquid Monitors

Item No.	Monitor Number	Service	Type	Range $\mu Ci/cm^3$	Calibration Isotopes	Check Source	Safety-Related	Control Function	Quantity	Schematic Number	GA Drawing Number
14	RMS-RE-056A RMS-RE-056B	CCW radiation *The concentration of radioactive material in the CCW*	γ	1E-6 to 1E-2	Cs-137	Yes	No	Termination	2	11.5 – 1f	11.5 – 2a
15	RMS-RE-057	Auxiliary steam condensate water radiation *The concentration of radioactive material in the auxiliary steam condensate water*	γ	1E-6 to 1E-2	Cs-137	Yes	No	Termination	1	11.5 – 1f	11.5 – 2a
16	RMS-RE-070	Primary coolant radiation *The concentration of radioactive material in the CVCS line*	γ	1E-4 R/h to 10 R/h	Cs-137	Yes	No	No	1	11.5 – 1c	11.5 – 2e
17	RMS-RE-058	Turbine building floor drain radiation *The concentration of radioactive material discharged from the Turbine Building*	γ	1E-7 to 1E-2	Cs-137	Yes	No	Diverse	1	11.5 – 1g	11.5 – 2c
18	RMS-RE-055	SG blowdown water radiation *The concentration of radioactive material in the SG blowdown water*	γ	1E-7 to 1E-3	Cs-137	Yes	No	Termination	1	11.5 - 1d	11.5 – 2h
19	RMS-RE-036	SG Blowdown return water radiation *The concentration of radioactive material in the SG return blowdown water*	γ	1E-7 to 1E-3	Cs-137	Yes	No	Diverse	1	11.5 - 1d	11.5 - 2e

Table 11.5-3 Effluent Gas Monitors

Item No.	Monitor Number	Service	Type	Range $\mu Ci/cm^3$	Calibration Isotopes	Check Source	Safety-Related	Control Function	Quantity	Schematic Number	GA Drawing Number
20	RMS-RE-021A RMS-RE-021B	Plant vent radiation gas (normal range) *Concentration of radioactive gas released through the plant vent*	β Scint	5E-8 to 1E+5	Kr-85 Xe-133	Yes	No	Termination	2	11.5 – 1h	11.5 – 2h
21	RMS-RE-080A	Plant vent extended radiation gas (accident mid range) *Concentration of radioactive gas released through the plant vent (in accident)*	β Scint/γ		Kr-85 Xe-133	Yes	No	No	1	11.5 – 1h	11.5 - 2h
22	RMS-RE-080B	Plant vent extended radiation gas (accident high range) *The concentration of radioactive gas released through the plant vent (in accident)*	β Scint/γ		Kr-85 Xe-133	Yes	No	No	1	11.5 – 1h	11.5 – 2h
23	RMS-RE-043A RMS-RE-043B	Condenser vacuum pump exhaust line radiation (normal range) *The concentration of radioactive gas released through the condenser vacuum pump*	β Scint	5E-8 to 1E+5	Kr-85 Xe-133	Yes	No	Termination	2	11.5 – 1i	11.5 – 2c
24	RMS-RE-081A	Condenser vacuum pump exhaust line radiation (accident mid range) *The concentration of radioactive gas released through the condenser vacuum pump (accident)*	β Scint/γ		Kr-85 Xe-133	Yes	No	No	1	11.5 – 1i	11.5 – 2c
25	RMS-RE-081B	Condenser vacuum pump exhaust line radiation (accident high range) *The concentration of radioactive gas released through the condenser vacuum pump (accident)*	β Scint/γ		Kr-85 Xe-133	Yes	No	No	1	11.5 – 1i	11.5 – 2c
26	RMS-RE-044A RMS-RE-044B	GSS exhaust fan discharge line radiation (normal range) *The concentration of radioactive gas in the gland steam*	β Scint	5E-8 to 1E+5	Kr-85 Xe-133	Yes	No	No	2	11.5 – 1j	11.5 – 2g
27	RMS-RE-082A	GSS exhaust fan discharge line radiation (accident mid range) *The concentration of radioactive gas in the gland steam (in accident)*	β Scint/γ		Kr-85 Xe-133	Yes	No	No	1	11.5 – 1j	11.5 – 2g
28	RMS-RE-082B	GSS exhaust fan discharge line radiation (accident high range) *The concentration of radioactive gas in the gland steam (in accident)*	β Scint/γ		Kr-85 Xe-133	Yes	No	No	1	11.5 – 1j	11.5 – 2g

Table 11.5-4 Effluent Liquid Monitors

Item No.	Monitor Number	Service	Type	Range $\mu Ci/cm^3$	Calibration Isotopes	Check Source	Safety-Related	Control Function	Quantity	Schematic Number	GA Drawing Number
29	RMS-RE-035	Liquid radwaste discharge *The concentration of radioactive material discharged from the LWMS*	γ	1E-7 to 1E-2	Cs-137	Yes	No	Termination	1	11.5 – 1d	11.5 – 2a
30	RMS-RE-074A RMS-RE-074B RMS-RE-074C RMS-RE-074D	ESW radiation *The concentration of radioactive material discharged from the ESWS*	γ	1E-7 to 1E-2	Cs-137	Yes	No	No	4	11.5 – 1f	11.5 – 2a

Table 11.5-5 Samplers

Service	Range μCi/cm^3	Safety-related	Quantity
Plant Vent Sampler Concentration of radioactive iodine, tritium and particulate released through the plant vent	Note1	No	1
Plant Vent Sampler (Accident Sampler) Concentration of radioactive particulates and halogens released through the plant vent (in accident)	1E-3 to 1E+2	No	1
Containment Sampler The concentration of radioactive iodine, tritium and particulate in the containment	Note1	No	1

Note1

Iodine: Small fraction of the activity which would result in annual exposures of 15 mrem to the thyroid an individual in an unrestricted area

Tritium: 1E-06 μCi/cm^3(of air)

Particulate: Small fraction of the activity which would result in annual exposures of 15 mrem to any organ an individual in an unrestricted area

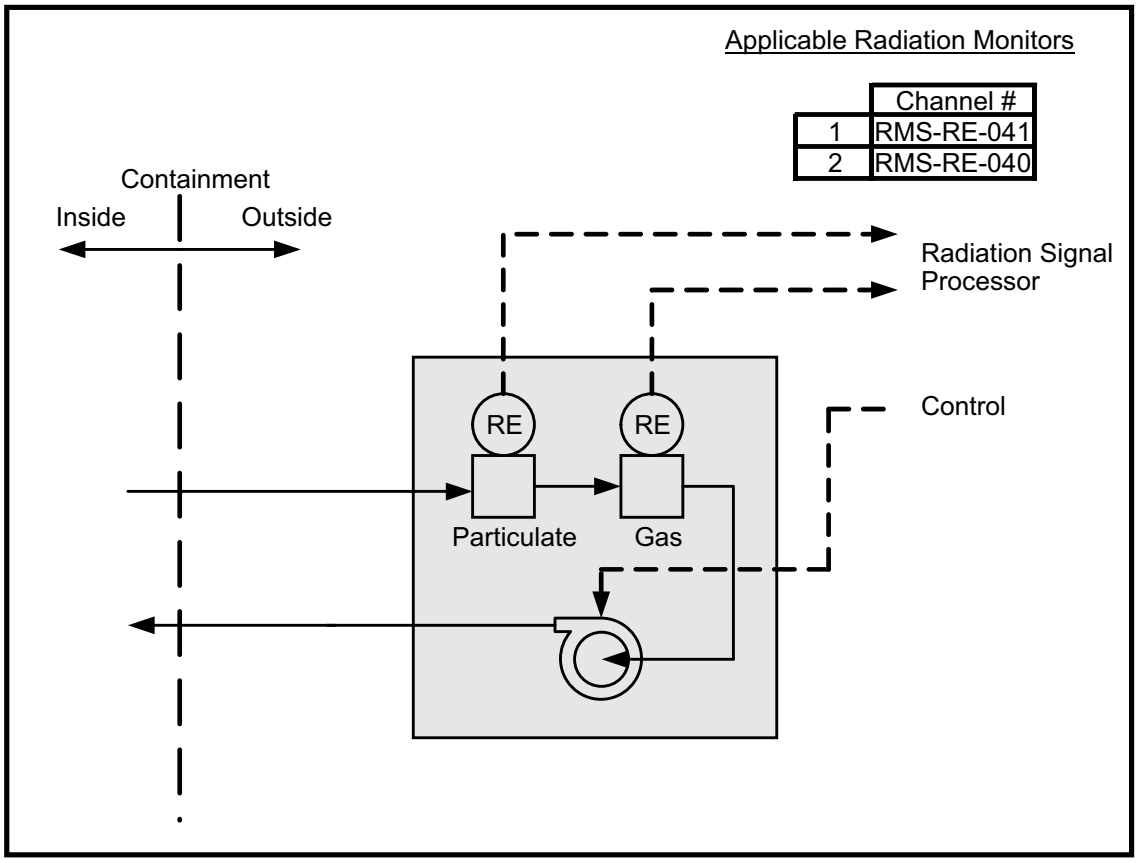

Figure 11.5-1a Typical Containment Atmosphere Radiation Monitor Schematic

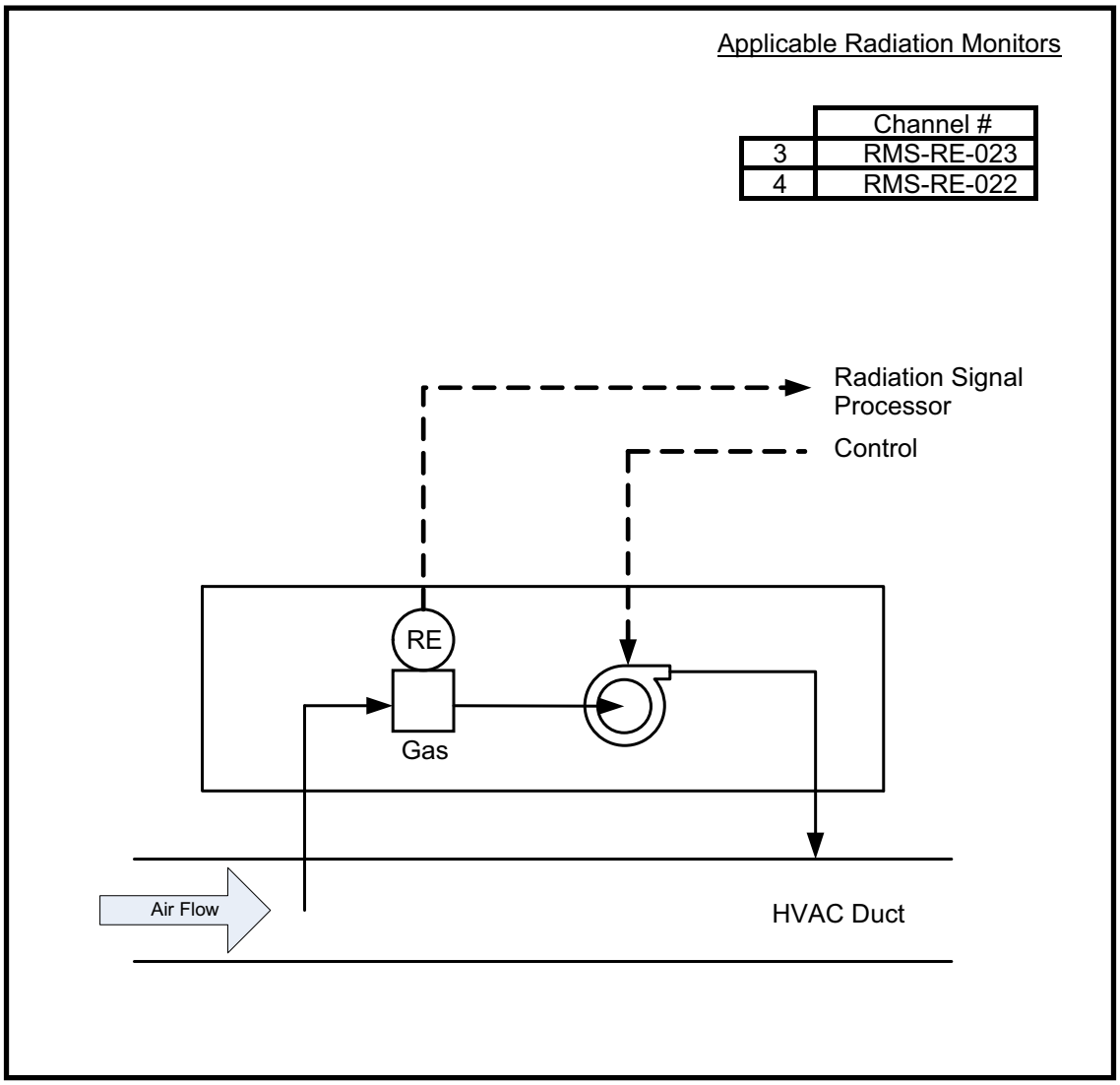

Figure 11.5-1b Typical HVAC Duct Gas Radiation Monitor Schematic

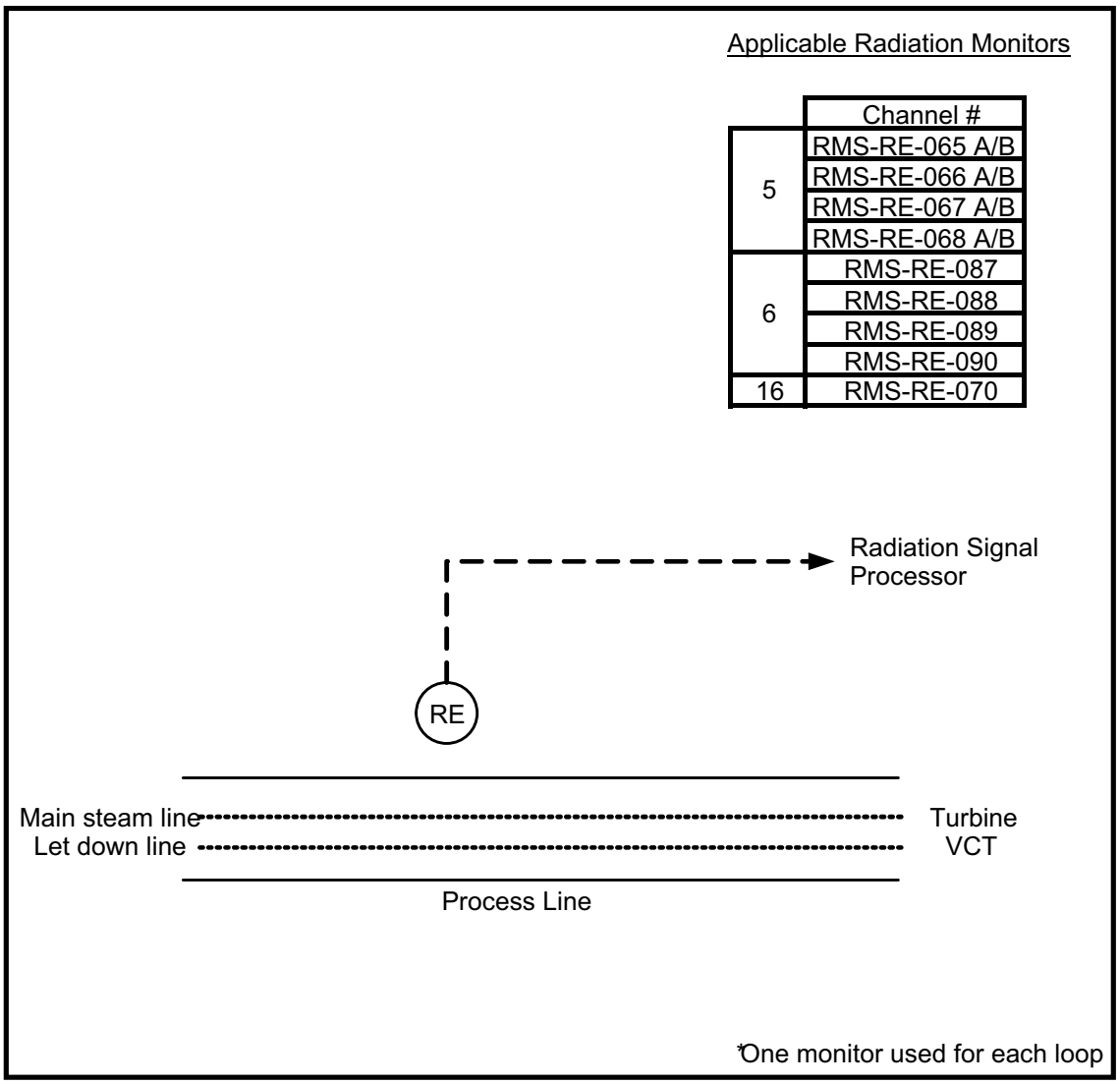

Figure 11.5-1c Typical Line Radiation Monitor Schematic

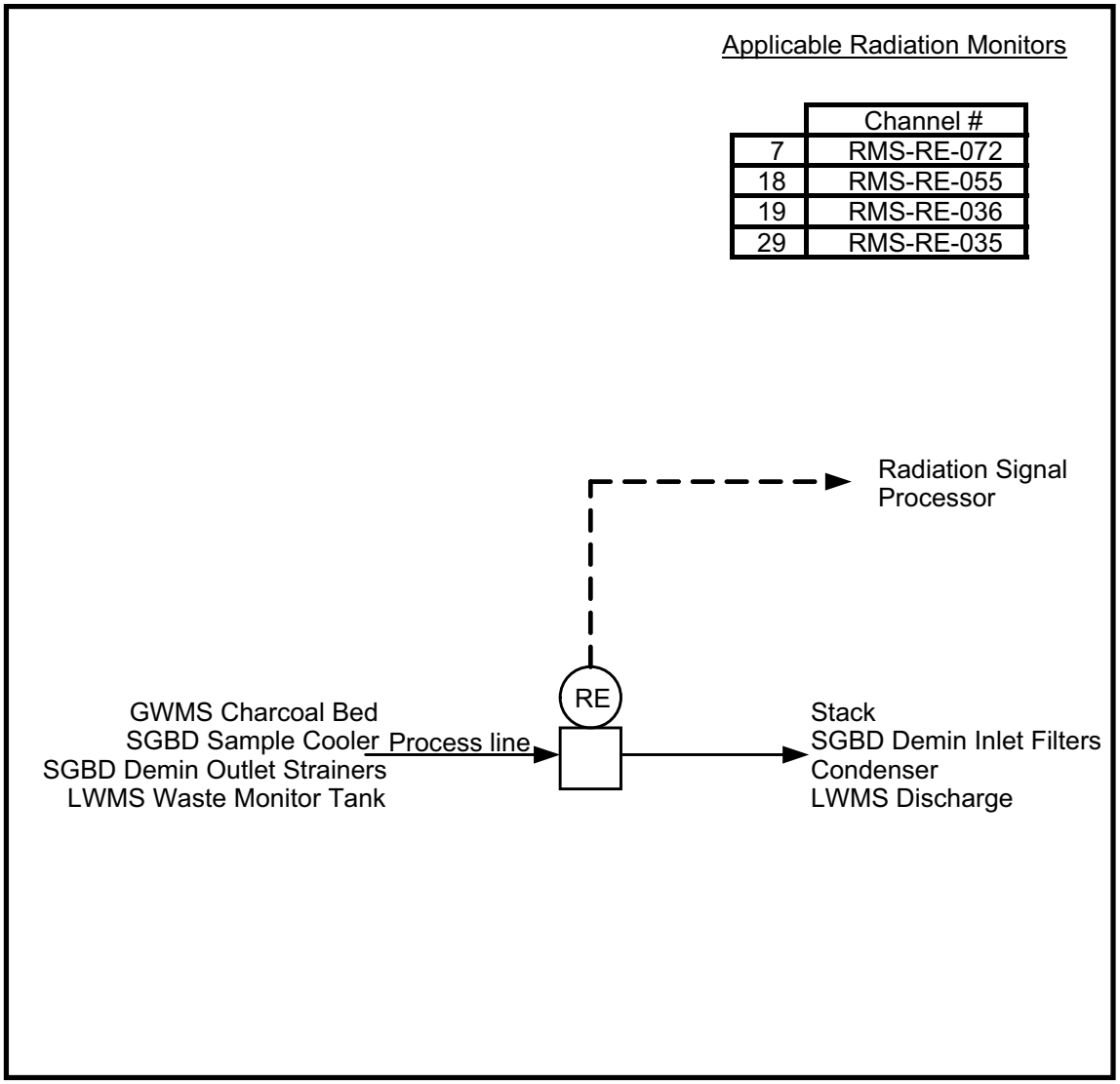

Figure 11.5-1d Typical Process In-Line Radiation Monitor Schematic

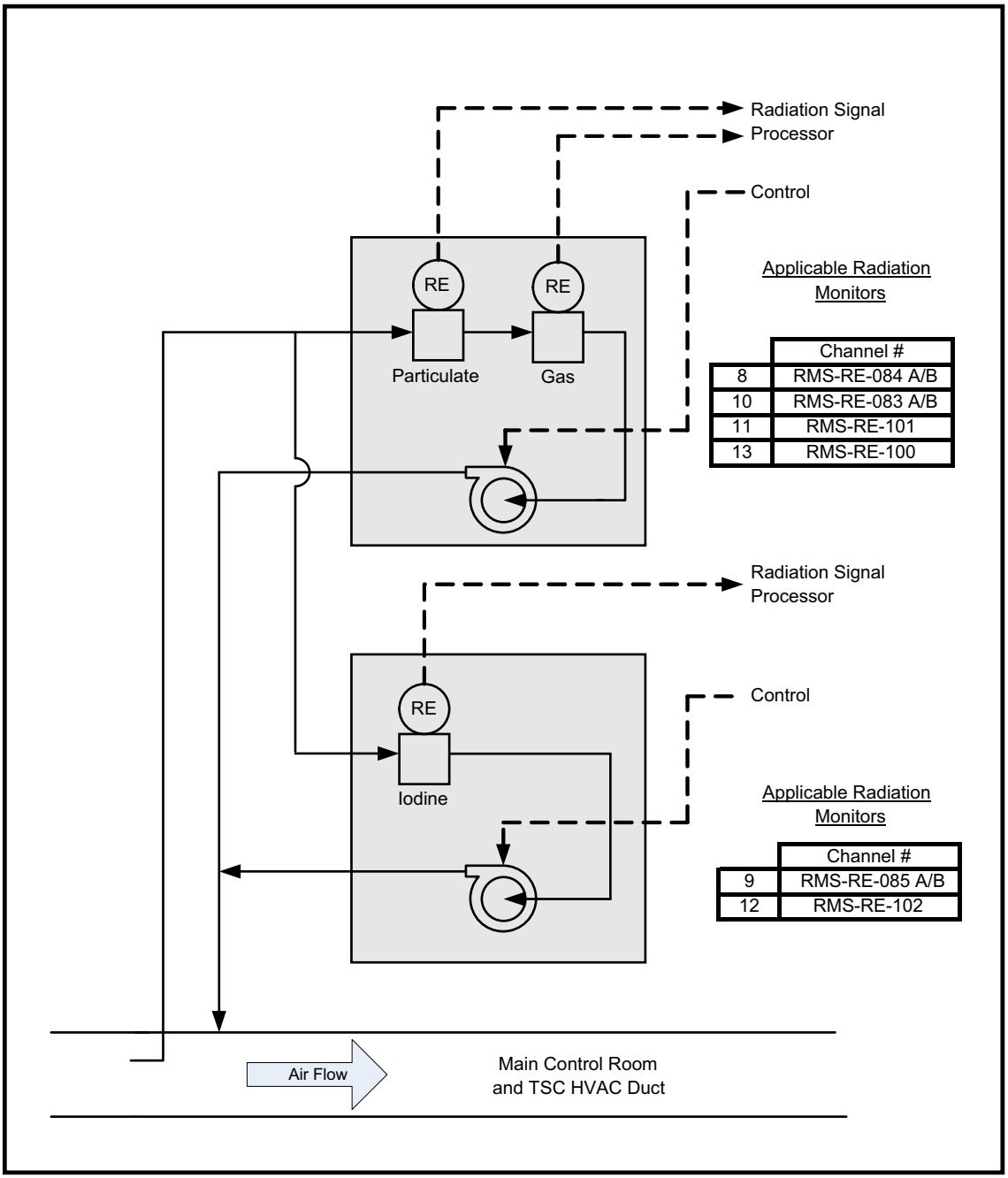

Figure 11.5-1e Typical Main Control Room HVAC Radiation Monitor Schematic

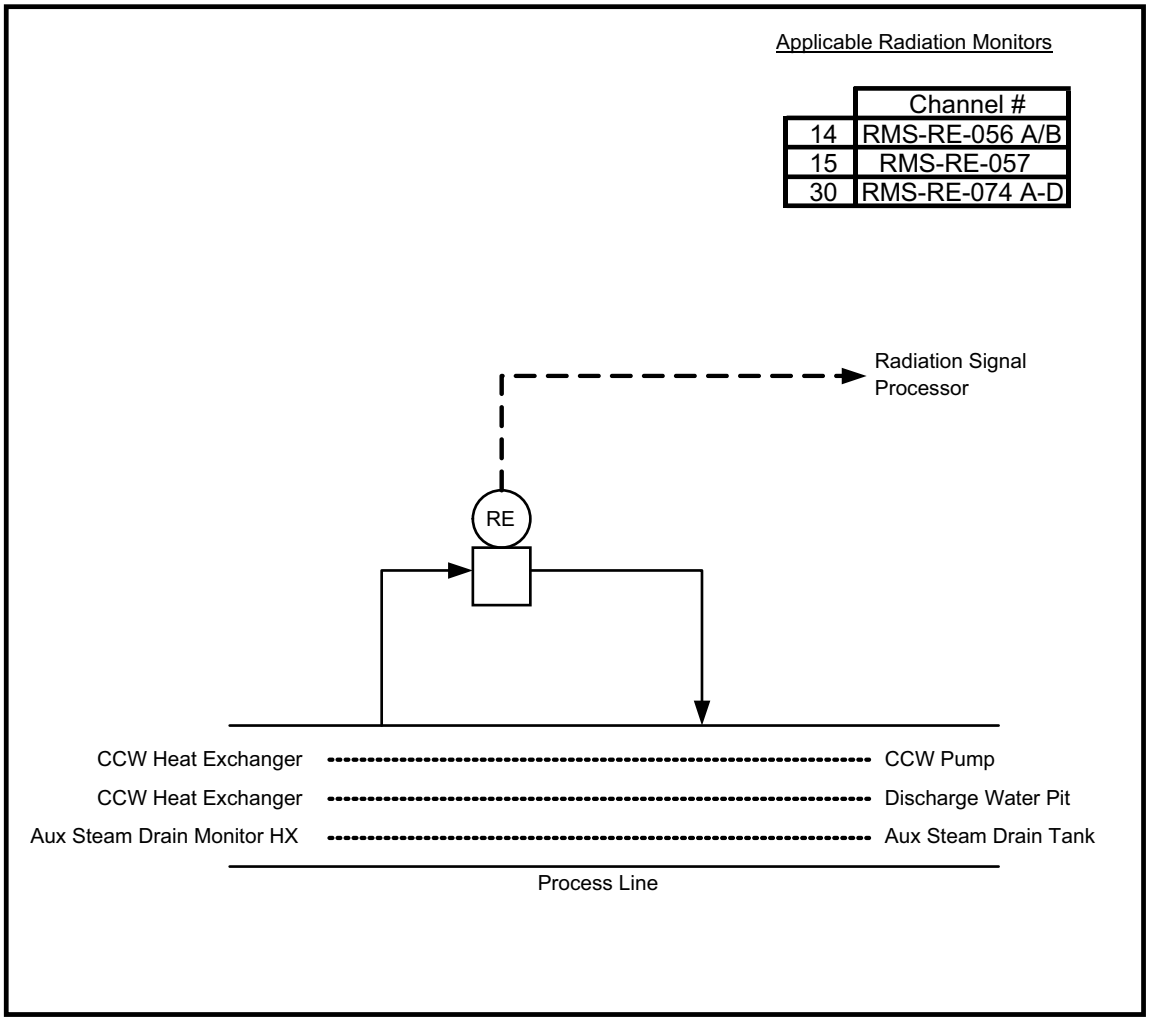

Figure 11.5-1f Typical Offline Radiation Monitor Arrangement

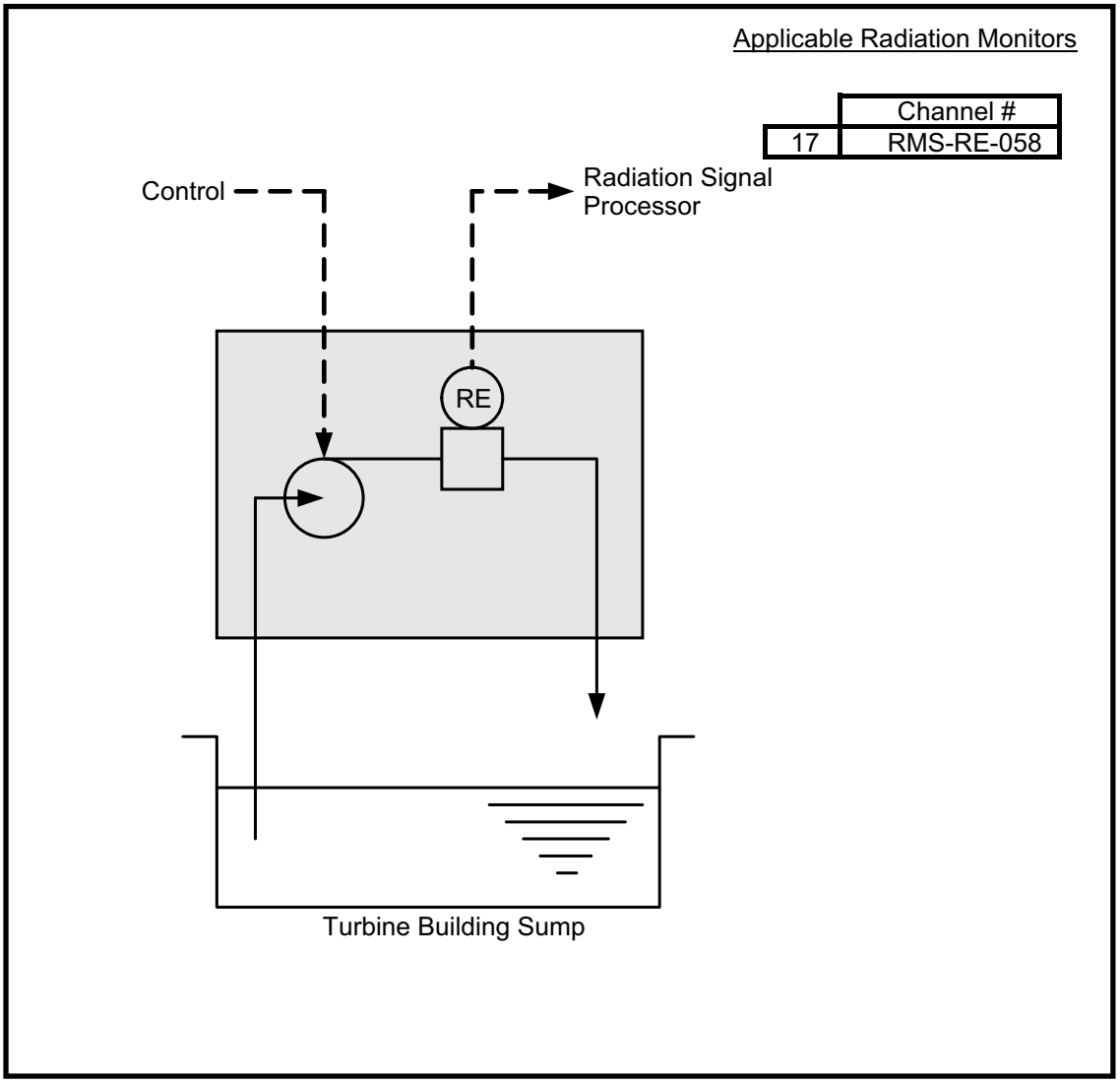

Figure 11.5-1g Typical Building Floor Drain Sump Offline Radiation Monitor Schematic

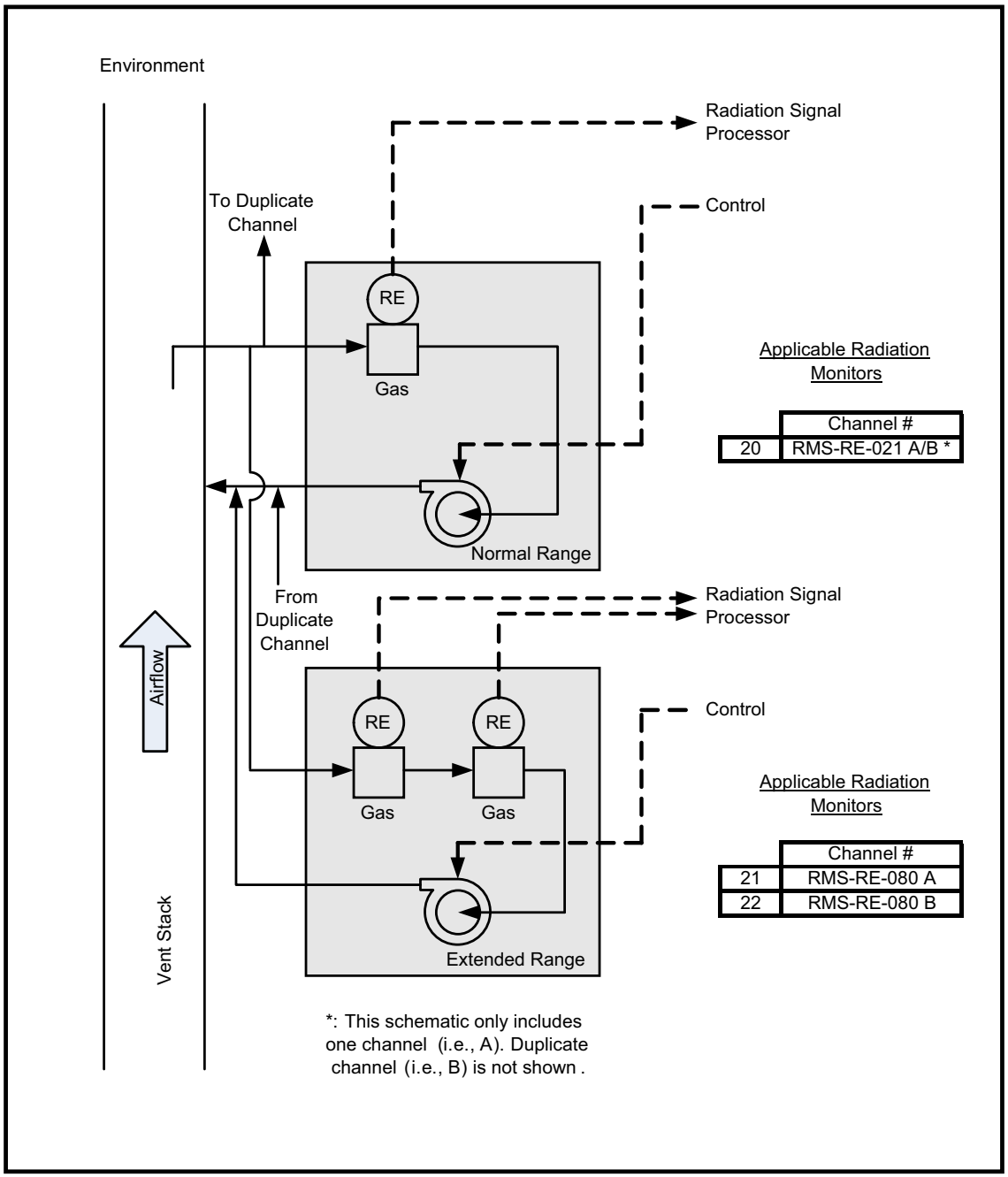

Figure 11.5-1h Typical Plant Vent Radiation Monitor Schematic

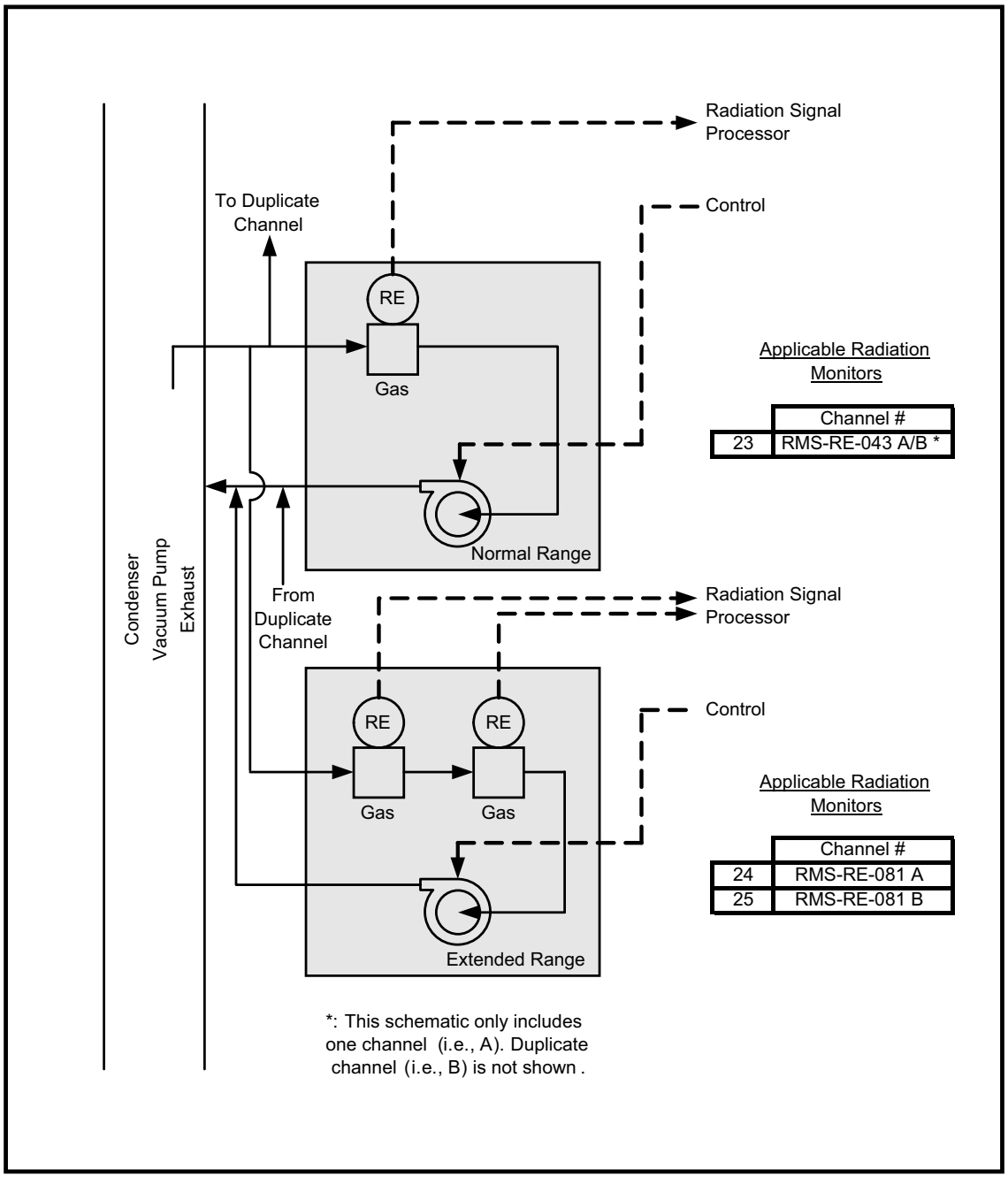

Figure 11.5-1i Typical Condenser Vacuum Pump Radiation Monitor Schematic

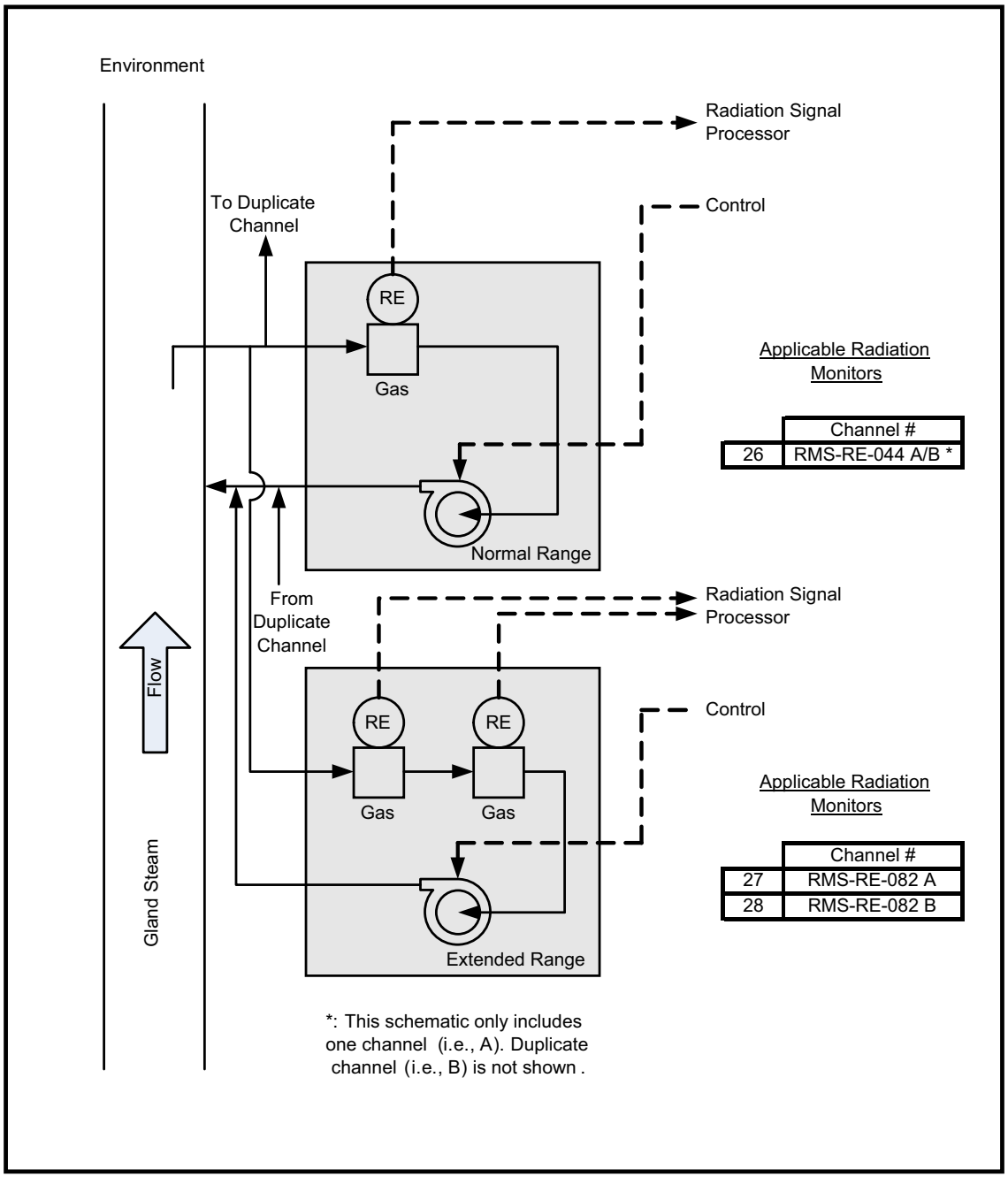

Figure 11.5-1j Typical Gland Steam Radiation Monitor Schematic

Security-Related Information – Withheld Under 10 CFR 2.390

Figure 11.5-2a Location of Radiation Monitors at Plant (Power Block at Elevation -26'-4")

Security-Related Information – Withheld Under 10 CFR 2.390

Figure 11.5-2b Location of Radiation Monitors at Plant (Power Block at Elevation -8'-7")

Security-Related Information – Withheld Under 10 CFR 2.390

Figure 11.5-2c Location of Radiation Monitors at Plant (Power Block at Elevation 3'-7")

Security-Related Information – Withheld Under 10 CFR 2.390

Figure 11.5-2d Location of Radiation Monitors at Plant (Power Block at Elevation 13'-6")

Security-Related Information – Withheld Under 10 CFR 2.390

Figure 11.5-2e Location of Radiation Monitors at Plant (Power Block at Elevation 25'-3")

Security-Related Information – Withheld Under 10 CFR 2.390

Figure 11.5-2f Location of Radiation Monitors at Plant (Power Block at Elevation 35'-2")

Security-Related Information – Withheld Under 10 CFR 2.390

Figure 11.5-2g Location of Radiation Monitors at Plant (Power Block at Elevation 50'-2")

Security-Related Information – Withheld Under 10 CFR 2.390

Figure 11.5-2h Location of Radiation Monitors at Plant (Power Block at Elevation 76'-5")

Security-Related Information – Withheld Under 10 CFR 2.390

Figure 11.5-2i Location of Radiation Monitors at Plant (Power Block at Elevation 101'-0")

Security-Related Information – Withheld Under 10 CFR 2.390

Figure 11.5-2j Location of Radiation Monitors at Plant (Power Block at Elevation 115'-6")

Security-Related Information – Withheld Under 10 CFR 2.390

Figure 11.5-2k Location of Radiation Monitors at Plant (Power Block Section A-A)