DESIGN CONTROL DOCUMENT FOR THE
US-APWR
Chapter 10
Steam and Power Conversion System

MUAP- DC010

REVISION 3

MARCH 2011

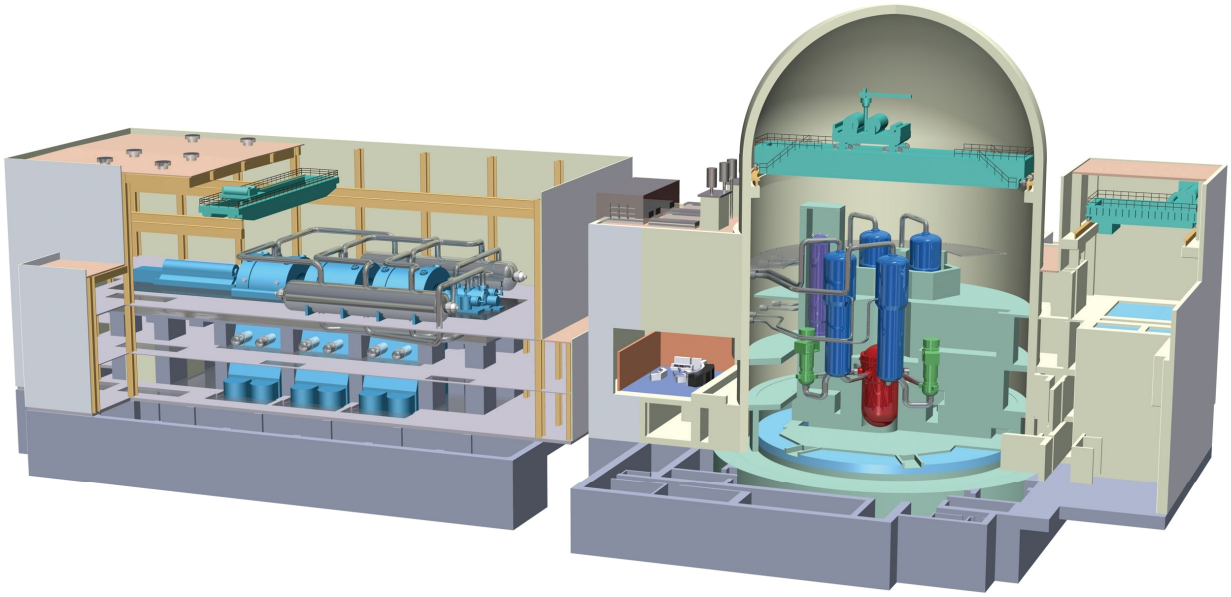

MITSUBISHI HEAVY INDUSTRIES, LTD.

©2011
Mitsubishi Heavy Industries, Ltd.
All Rights Reserved

© 2011

MITSUBISHI HEAVY INDUSTRIES, LTD.

All Rights Reserved

This document has been prepared by Mitsubishi Heavy Industries, Ltd. ("MHI") in connection with the U.S. Nuclear Regulatory Commission's ("NRC") licensing review of MHI's US-APWR nuclear power plant design. No right to disclose, use or copy any of the information in this document, other than by the NRC and its contractors in support of the licensing review of the US-APWR, is authorized without the express written permission of MHI.

This document contains technology information and intellectual property relating to the US-APWR and it is delivered to the NRC on the express condition that it not be disclosed, copied or reproduced in whole or in part, or used for the benefit of anyone other than MHI without the express written permission of MHI, except as set forth in the previous paragraph.

This document is protected by the laws of Japan, U.S. copyright law, international treaties and conventions, and the applicable laws of any country where it is being used.

Mitsubishi Heavy Industries, Ltd.

16-5, Konan 2-chome, Minato-ku

Tokyo 108-8215 Japan

CONTENTS

Page

10.0 STEAM AND POWER CONVERSION SYSTEM 10.1-1

10.1 Summary Description 10.1-1

10.1.1 General Description 10.1-1

10.1.2 Protective Features 10.1-2

10.1.3 Combined License Information 10.1-3

10.1.4 References 10.1-4

10.2 Turbine-Generator (T/G) 10.2-1

10.2.1 Design Bases 10.2-1

10.2.1.1 Safety Design Bases 10.2-1

10.2.1.2 Non-Safety Power Generation Design Bases 10.2-1

10.2.2 Description 10.2-2

10.2.2.1 General Description 10.2-2

10.2.2.2 Component Description 10.2-2

10.2.2.3 Control Function 10.2-6

10.2.3 Turbine Rotor Integrity 10.2-16

10.2.3.1 Materials Selection 10.2-16

10.2.3.2 Fracture Toughness 10.2-16

10.2.3.3 Preservice Inspection 10.2-18

10.2.3.4 Turbine Rotor Design 10.2-19

10.2.3.5 Inservice Inspection 10.2-20

10.2.4 Evaluation 10.2-21

10.2.5 Combined License Information 10.2-21

10.2.6 References 10.2-22

10.3 Main Steam Supply System 10.3-1
10.3.1 Design Bases 10.3-1
10.3.1.1 Safety Design Bases 10.3-1
10.3.1.2 Non Safety Power Generation Design Bases 10.3-4
10.3.2 Description 10.3-5
10.3.2.1 General Description 10.3-5
10.3.2.2 Main Steam System – Detailed Description 10.3-5
10.3.2.3 Component Description 10.3-7
10.3.2.4 System Operation 10.3-10
10.3.3 Safety Evaluation 10.3-11
10.3.4 Inspection and Tests 10.3-13
10.3.4.1 Preoperational testing 10.3-13
10.3.4.2 In-Service Testing 10.3-13
10.3.5 Water Chemistry 10.3-14
10.3.5.1 Chemistry Control Basis 10.3-14
10.3.5.2 Contaminant Ingress 10.3-15
10.3.5.3 Condensate Polishing 10.3-15
10.3.5.4 Chemical Addition 10.3-15
10.3.5.5 Action Levels for Abnormal Conditions 10.3-15
10.3.5.6 Lay Up and Heatup 10.3-16
10.3.5.7 Chemical Analysis Basis 10.3-16
10.3.5.8 Sampling 10.3-17
10.3.5.9 Condenser Inspection 10.3-17
10.3.5.10 Conformance with BTP MTEB 5-3 ..... 10.3-17
10.3.6 Steam and Feedwater System Materials 10.3-17

10.3.6.1 Fracture Toughness 10.3-17
10.3.6.2 Material Selection and Fabrication 10.3-17
10.3.6.3 Flow-Accelerated Corrosion (FAC) 10.3-18
10.3.7 Combined License Information 10.3-21
10.3.8 References 10.3-21
10.4 Other Features of Steam and Power Conversion System 10.4-1
10.4.1 Main Condensers 10.4-1
10.4.1.1 Design Basis 10.4-1
10.4.1.2 System Description 10.4-1
10.4.1.3 Safety Evaluation 10.4-3
10.4.1.4 Tests and Inspections 10.4-3
10.4.1.5 Instrumentation Applications 10.4-3
10.4.2 Main Condenser Evacuation System 10.4-6
10.4.2.1 Design Bases 10.4-6
10.4.2.2 System Description 10.4-6
10.4.2.3 Safety Evaluation 10.4-8
10.4.2.4 Tests and Inspections 10.4-8
10.4.2.5 Instrumentation Applications 10.4-8
10.4.3 Gland Seal System 10.4-11
10.4.3.1 Design Basis 10.4-11
10.4.3.2 System Description 10.4-11
10.4.3.3 Safety Evaluation 10.4-12
10.4.3.4 Tests and Inspections 10.4-12
10.4.3.5 Instrumentation Applications 10.4-12
10.4.4 Turbine Bypass System 10.4-15

10.4.4.1 Design Bases 10.4-15
10.4.4.2 System Description 10.4-15
10.4.4.3 System Operation 10.4-16
10.4.4.4 Safety Evaluation 10.4-17
10.4.4.5 Inspection and Tests 10.4-17
10.4.4.6 Instrumentation Application 10.4-18
10.4.5 Circulating Water System 10.4-20
10.4.5.1 Design Bases 10.4-20
10.4.5.2 System Description 10.4-20
10.4.5.3 Operation 10.4-23
10.4.5.4 Safety Evaluation 10.4-24
10.4.5.5 Tests and Inspections 10.4-24
10.4.5.6 Instrumentation Applications 10.4-25
10.4.6 Condensate Polishing System 10.4-30
10.4.6.1 Design Bases 10.4-30
10.4.6.2 System Description 10.4-30
10.4.6.3 Safety Evaluation 10.4-32
10.4.6.4 Tests and Inspections 10.4-32
10.4.6.5 Instrumentation Applications 10.4-32
10.4.7 Condensate and Feedwater System 10.4-38
10.4.7.1 Design Bases 10.4-38
10.4.7.2 System Description 10.4-41
10.4.7.3 Safety Evaluation 10.4-50
10.4.7.4 Inspection and Tests 10.4-51
10.4.7.5 Instrumentation Applications 10.4-52

10.4.7.6 Flow-Accelerated Corrosion 10.4-53

10.4.7.7 Water Hammer Prevention 10.4-53

10.4.8 Steam Generator Blowdown System 10.4-64

10.4.8.1 Design Bases 10.4-64

10.4.8.2 System Description 10.4-66

10.4.8.3 Safety Evaluation 10.4-72

10.4.8.4 Inspection and Tests 10.4-73

10.4.8.5 Instrumentation Applications 10.4-73

10.4.9 Emergency Feedwater System 10.4-81

10.4.9.1 Design Basis 10.4-81

10.4.9.2 System Description 10.4-84

10.4.9.3 Safety Evaluation 10.4-93

10.4.10 Secondary Side Chemical Injection System 10.4-110

10.4.10.1 Design Bases 10.4-110

10.4.10.2 System Description 10.4-111

10.4.10.3 Safety Evaluation 10.4-115

10.4.10.4 Tests and Inspections 10.4-115

10.4.10.5 Instrumentation Applications 10.4-115

10.4.11 Auxiliary Steam Supply System 10.4-123

10.4.11.1 Design Bases 10.4-123

10.4.11.2 System Description 10.4-123

10.4.11.3 Safety Evaluation 10.4-126

10.4.11.4 Tests and Inspections 10.4-126

10.4.11.5 Instrumentation Applications 10.4-126

10.4.12 Combined License Information 10.4-128

10.4.13 References 10.4-129

TABLES

Page

Table 10.1-1 Significant Design Features and Performance Characteristics for Major Steam and Power Conversion System Components ... 10.1-5

Table 10.2-1 Turbine-Generator and Auxiliaries Design Parameters ... 10.2-23

Table 10.2-2 Turbine Overspeed Protection ... 10.2-24

Table 10.2-3 Generator Protective Devices Furnished with The Voltage Regulator Package ... 10.2-25

Table 10.2-4 Turbine-Generator Valve Closure Times ... 10.2-26

Table 10.3.2-1 Main Steam Supply System Design Data ... 10.3-23

Table 10.3.2-2 Main Steam System Valves ... 10.3-24

Table 10.3.2-3 Main Steam and Feedwater Piping Design Data ... 10.3-27

Table 10.3.2-4 Main Steam Branch Piping Design Data (2.5-INCH AND LARGER) ... 10.3-29

Table 10.3.2-5 ASME Material Specifications with Filler Metal Specifications and Classification for each Welding Process ... 10.3-30

Table 10.3.2-6 Main Steam and Feedwater Piping Fluid Data ... 10.3-32

Table 10.3.3-1 Main Steam Supply System Failure Modes and Effects Analysis ... 10.3-33

Table 10.3.5-1 Deleted ... 10.3-36

Table 10.3.5-2 Deleted ... 10.3-37

Table 10.3.5-3 Deleted ... 10.3-38

Table 10.4.1-1 Main Condenser Design Data ... 10.4-5

Table 10.4.2-1 Main Condenser Evacuation System Design Data ... 10.4-9

Table 10.4.4-1 TBS Component Design Parameters ... 10.4-19

Table 10.4.5-1 Design Parameters for Major Components of Circulating Water System ... 10.4-26

Table 10.4.6-1 Condensate Polishing System Design Parameters ... 10.4-34

Table 10.4.6-2 Deleted ... 10.4-36

Table 10.4.7-1 Major Valve Design Parameters ... 10.4-56

Table 10.4.7-2 Major Component Design Parameters ... 10.4-57

Table 10.4.7-3 Condensate and Feedwater System Failure Modes and Effects Analysis 10.4-59

Table 10.4.8-1 Steam Generator Blowdown System Major Component Design Parameters 10.4-75

Table 10.4.9-1 Emergency Feedwater System Component Design Parameters 10.4-97

Table 10.4.9-2 Steam Generator Makeup Flow Requirement 10.4-100

Table 10.4.9-3 Emergency Feedwater Flow Information for Various Postulated Events 10.4-101

Table 10.4.9-4 Emergency Feedwater System Failure Modes and Effects Analysis (FMEA) 10.4-102

Table 10.4.9-5 Emergency Feedwater System Summary of Indication and Controls 10.4-105

Table 10.4.9-6 Emergency Feedwater System Electric Power Sources 10.4-106

Table 10.4.9-7 Principle Emergency Feedwater System Materials 10.4-107

Table 10.4.10-1 Major Equipment Design Parameters 10.4-117

Table 10.4.10-2 Secondary Side Water Chemistry 10.4-120

FIGURES

Page

Figure 10.1-1 Overall System Flow Diagram 10.1-6

Figure 10.1-2 Heat Balance Diagram Rated Condition (Cond. pressure. : 2.6inHgA) 10.1-7

Figure 10.1-3 Heat Balance Diagram VWO Condition (Cond. pressure. : 1.5inHgA) 10.1-8

Figure 10.2-1 Turbine-Generator Outline Drawing 10.2-27

Figure 10.3-1 Main Steam Supply System Piping and Instrumentation Diagram (1/4) 10.3-39

Figure 10.3-2 Main Steam Supply System Piping and Instrumentation Diagram (2/4) 10.3-40

Figure 10.3-3 Main Steam Supply System Piping and Instrumentation Diagram (3/4) 0.3-41

Figure 10.3-4 Main Steam Supply System Piping and Instrumentation Diagram (4/4) 10.3-42

Figure 10.4.2-1 Main Condenser Evacuation System Piping and Instrumentation Diagram 10.4-10

Figure 10.4.3-1 Gland Seal System Piping and Instrumental Diagram 10.4-14

Figure 10.4.5-1 Circulating Water System Piping and Instrumentation Diagram 10.4-29

Figure 10.4.6-1 Condensate Polishing System Piping and Instrumentation Diagram 10.4-37

Figure 10.4.7-1 Condensate and Feedwater System Piping and Instrumentation Diagram (1/4) 10.4-60

Figure 10.4.7-2 Condensate and Feedwater System Piping and Instrumentation Diagram (2/4) 10.4-61

Figure 10.4.7-3 Condensate and Feedwater System Piping and Instrumentation Diagram (3/4) 10.4-62

Figure 10.4.7-4 Condensate and Feedwater System Piping and Instrumentation Diagram (4/4) 10.4-63

Figure 10.4.8-1 Steam Generator Blowdown System Piping and Instrumentation Diagram (1/2) 10.4-78

Figure 10.4.8-2 Steam Generator Blowdown System Piping and Instrumentation Diagram (2/2) 10.4-79

Figure 10.4.8-3 Concept of Peripheral Blowdown 10.4-80

Figure 10.4.9-1 Emergency Feedwater System Piping and Instrumentation Diagram (1/2) 10.4-108

Figure 10.4.9-2 Emergency Feedwater System Piping and Instrumentation Diagram (2/2) 10.4-109

Figure 10.4.10-1 Secondary Side Chemical Injection System Piping and Instrumentation Diagram 10.4-121

Figure 10.4.10-2 Secondary Side Chemical Injection System Piping and Instrumentation Diagram 10.4-122

Figure 10.4.11-1 Auxiliary Steam Supply System Piping and Instrumentation Diagram 10.4-127

ACRONYMS AND ABBREVIATIONS

ANSI	American National Standards Institute
AOO	anticipated operational occurrence
ASME	American Society of Mechanical Engineers
ASSS	auxiliary steam supply system
ASTM	American Society for Testing and Materials
ATC	automatic turbine control
ATWS	anticipated transient without scram
AVT	all volatile treatment
B.A.	boric acid
CCW	component cooling water
CDS	condensate system
CFS	condensate and feedwater system
COL	Combined License
CPS	condensate polishing system
CTW	cooling tower
CWS	circulating water system
DBA	design-basis accident
DEH	digital electro-hydraulic
ECCS	emergency core cooling system
ECP	electrical corrosion potential
EFW	emergency feedwater
EFWS	emergency feedwater system
EPRI	Electric Power Research Institute
FAC	flow-accelerated corrosion
FATT	fracture appearance transit temperature
FMEA	failure modes and effects analysis
FLB	feedwater line break
FWS	feedwater system
GDC	General Design Criteria
GSS	gland seal system
HEI	Heat Exchange Institute
HPT	high-pressure turbine
IST	inservice testing
IV	Intercept valve
JAPEIC	Japan Power Engineering and Inspection Corporation
LRB	last rotating blade
LOCA	loss-of-coolant accident

ACRONYMS AND ABBREVIATIONS (CONTINUED)

LOOP	loss of offsite power
LPT	low-pressure turbine
LWMS	liquid waste management system
M/D	motor-driven
MCES	main condenser evacuation system
MFBRV	main feedwater bypass regulation valve
MFCV	main feedwater check valve
MFIV	main feedwater isolation valve
MFRV	main feedwater regulation valve
MS/R	moisture separator/reheaters
MSBIV	main steam bypass isolation valve
MSCV	main steam check valve
MSDIV	main steam drain line isolation valve
MSDV	main steam depressurization valve
MSIV	main steam isolation valve
MSLB	main steam line break
MSR	maximum steaming rate
MSRV	main steam relief valve
MSRVBV	main steam relief valve block valve
MSS	main steam supply system
MSS-SP	manufacturer standardization society-standard practice
MSSV	main steam safety valve
MTCV	main turbine control valves
MTSV	main turbine stop valve
non-ESW	non-essential service water
NPSH	net positive suction head
NSSS	nuclear steam supply system
OLM	on-line maintenance
OPC	overspeed protection controller
RCS	reactor coolant system
RHRS	residual heat removal system
RSV	reheat stop valve
SBLOCA	small break loss of coolant accident
SBO	station blackout
SCIS	secondary side chemical injection system
SG	steam generator
SGBDS	steam generator blowdown system

ACRONYMS AND ABBREVIATIONS (CONTINUED)

SGTR	steam generator tube rupture
SGWFCV	steam generator water filling control valve
SRHV	spent resin holding vessel
SSC	structures, systems, and component
SSE	safe-shutdown earthquake
SSS	secondary sampling system
SWMS	solid waste management system
T/D	turbine-driven
T/G	turbine-generator
T/B	turbine building
TBS	turbine bypass system
TBV	turbine bypass valves
TCS	turbine component cooling water system
TDS	total dissolved solids
TSI	turbine supervisory instrument
URD	Utility Requirements Document
VWO	valve wide open

10.0 STEAM AND POWER CONVERSION SYSTEM

10.1 Summary Description

The steam and power conversion system is designed to remove heat energy from the reactor coolant system via the four steam generators and to convert it to electrical power in the turbine-generator. The main condenser removes air and other non condensibles from the condensate and transfers heat to the circulating water system (see Subsection 10.4.5). The deaerator additionally deaerates the condensate, and supplies deaerated water to the regenerative feedwater cycle. The regenerative turbine cycle heats the feedwater, and the main feedwater system returns it to the steam generators.

Table 10.1-1 provides the design and performance data for the major system components.

Figure 10.1-1 depicts conceptual overall system flow diagram based on the standard plant described in Subsection 10.1.1 and 10.1.2.

Figure 10.1-2 depicts heat balance, with 2.6 Inch HgA condenser pressure (Rated power).

Figure 10.1-3 depicts the heat balance with valve wide open (VWO) - stretch power.

10.1.1 General Description

The steam generated in the four steam generators is supplied to the high-pressure turbine by the main steam system (Section 10.3). After expansion through the high-pressure turbine, the steam passes through the two moisture separator/reheaters (MS/Rs) and is then admitted to the three low-pressure turbines. A portion of the steam is extracted from the high and low-pressure turbines for seven stages of feedwater heating.

Exhaust steam from the low-pressure turbines is condensed and deaerated in the main condenser. The heat exhausted in the main condenser is removed by the circulating water system (CWS). The condensate pumps take suction from the condenser hotwell and deliver the condensate through four stages of low pressure closed feedwater heaters to the fifth stage, open deaerating heater. Condensate then flows to the suction of the steam generator feedwater booster pump and is discharged to the suction of the main feedwater pump. The steam generator feedwater pumps discharge the feedwater through two stages of high pressure feedwater heaters to the four steam generators.

The moisture separator drains are sent to the deaerator. The reheater drains are sent to the high pressure feedwater heaters, and the high pressure feedwater heater(s) drains are cascaded into the deaerator. Drains from the low pressure feedwater heaters are cascaded through successively lower pressure feedwater heaters to the heater drain tank and pumped by the heater drain pump(s) to the piping between the low pressure heater no. 1 and 2.

The turbine-generator has an output ranging from 1600 MW_e to 1700 MW_e depending on the plant condition for the MHI nuclear steam supply system (NSSS) thermal output of

4,466 MW_t. The principal turbine-generator conditions and the rated NSSS conditions are listed in Table 10.1-1. The turbine cycle systems have been designed to meet the rated conditions for the NSSS.

Instrumentation systems are designed for the normal operating conditions of the steam and condensate/feedwater systems. The systems are designed for safe and reliable control and incorporate requirements for performance calculations and periodic heat balances. Instrumentation for the secondary cycle is also provided to meet recommendations by the turbine supplier and ANSI/ASME TDP-2-1985 (Reference 10.1-1), "Recommended Practices for the Prevention of Water Damage to Steam Turbines Used for Electric Power Generation".

10.1.2 Protective Features

Loss of External Electrical Load and/or Turbine Trip Protection

In the event of turbine trip, steam is bypassed to the condenser via the turbine bypass valves and, if required, to the atmosphere via the air-operated relief valves. Steam relief permits energy removal from the reactor coolant system. Load rejection capability is discussed in Subsections 10.4.4 and 15.2.1.

Overpressure Protection

Spring-loaded safety valves are provided on main steam lines, in accordance with the ASME Code, Section III (Reference 10.1-2). The pressure relief capacity of the safety valves is such that the energy generated at the high-flux reactor trip setting can be dissipated through this system. The design capacity of the main steam safety valves equals or exceeds 105 percent of the NSSS design steam flow at an accumulation pressure not exceeding 110 percent of the main steam system design pressure. Overpressure protection for the main steam lines is a safety-related function. The main steam safety valves are described in Subsection 10.3.2.3.2.

In addition, the shell sides of the feedwater heaters and the moisture separator/reheaters are provided with overpressure protection in accordance with ASME Code, Section VIII, Division 1 (Reference 10.1-3), or equivalent standards.

Loss of Main Feedwater Flow Protection

The emergency feedwater pumps provide feedwater to the steam generators for the removal of sensible and decay heat whenever main feedwater flow is interrupted, including loss of offsite electric power. This system is described in Subsection 10.4.9.

Turbine Overspeed Protection

During normal operations, a digital electro-hydraulic (DEH) system provides speed control, acceleration and overspeed protection of the turbine. The DEH system has two modes of operation. The first maintains the desired speed during normal operation. The second mode is the overspeed protection control which operates if the normal speed control fails or upon a load rejection. Additional protection is provided by an emergency

trip system which continuously monitors critical turbine parameters on a multi-channel basis, trips the turbine in the event that speeds in excess of overspeed protection control trip set points are reached. Emergency overspeed trip consists of a mechanical and an electrical trip. Mechanical overspeed trip device drains emergency trip oil and closes the main turbine stop, the main turbine control, the intercept and the reheat valves if turbine speed exceeds 110 percent of rated speed. The electric overspeed trip system closes the main stop and reheat stop valves (2-out-of-3 trip logic) if the turbine speed exceeds 111 percent of rated speed. This system is described in Subsection 10.2.2.3.

Turbine Missile Protection

Turbine rotor integrity minimizes the probability of generating turbine missiles and is discussed in Subsection 10.2.3. Turbine missiles are addressed in Subsection 3.5.1.3. The favorable orientation of the turbine-generator directs potential missiles away from safety-related equipment and structures.

Radioactivity Protection

Under normal operating conditions, there are no radioactive contaminants of operational concern present in the steam and power conversion system. However, it is possible for the system to become contaminated through steam generator tube leakage. In this event, radiological monitoring of the main condenser air removal system, the gland seal system, the steam generator blowdown system, and the main steam lines will detect contamination and alarm high radioactivity concentrations. A discussion of the radiological aspects of primary-to-secondary system leakage and limiting conditions for operation is contained in Chapter 11. The steam generator blowdown system described in Subsection 10.4.8 serves to limit the radioactivity level in the secondary cycle, below the operational limits.

Flow Accelerated Corrosion Protection

Flow accelerated corrosion (FAC) resistant materials are used in steam and power conversion systems for components exposed to two-phase flow where significant erosion can occur. Factors considered in the evaluation of FAC include system piping and component configuration and geometry, water chemistry, piping and component material, fluid temperature, and fluid velocity.

In addition to material selection, pipe size and layout may also be used to minimize the potential for FAC in systems with two-phase flow condition. To maintain a noncorrosive environment, the secondary side water chemistry (see Subsection 10.3.5) uses an all volatile chemistry for pH adjustment and corrosion prevention chemicals. Steam and power conversion systems are designed to facilitate inspection and FAC monitoring programs.

10.1.3 Combined License Information

No additional information is required to be provided by a COL Applicant in connection with this section.

10.1.4 References

10.1-1 Recommended Practices for the Prevention of Water Damage to Steam Turbines Used for Electric Power Generation, ANSI/ASME TDP-2-1985.

10.1-2 Rules for Construction of Nuclear Facility Components, ASME Boiler and Pressure Vessel Code, Section III.

10.1-3 Rules for Construction of Pressure Vessels, ASME Boiler and Pressure Vessel Code, Section VIII,Division 1.

Table 10.1-1 Significant Design Features and Performance Characteristics for Major Steam and Power Conversion System Components

Nuclear steam supply system, rated power operation	
Rated NSSS power (MWt)	4,466
Steam generator outlet pressure (psig)	957
Steam generator inlet feedwater temperature (°F)	456.7
Maximum steam generator outlet steam moisture (%)	0.1
Steam generator outlet steam temperature (°F)	541.2
Quantity of steam generators	4
Total steam flow rate from steam generator (lb/hr)	20,200,000

Turbine

Output (MW_e)	1,625 (Note)
Turbine type	Tandem-compound, 6-flow, 74-in last-stage blade
Turbine elements	1 double flow high pressure, 3 double flow low pressure
Operating speed (rpm)	1,800

Note: Output is based on main condenser pressure of 2.6 inch-HgA

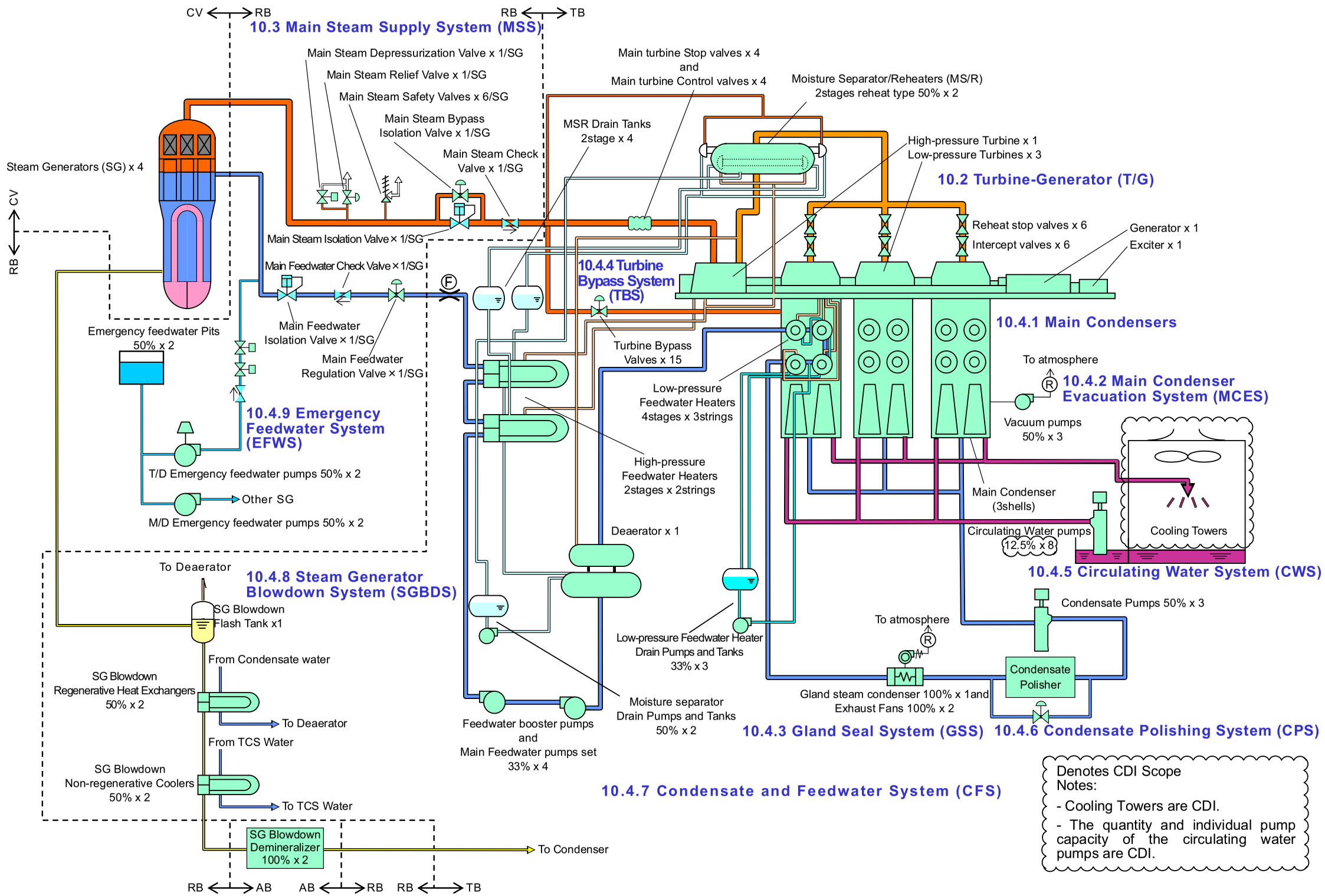

Figure 10.1-1 Overall System Flow Diagram

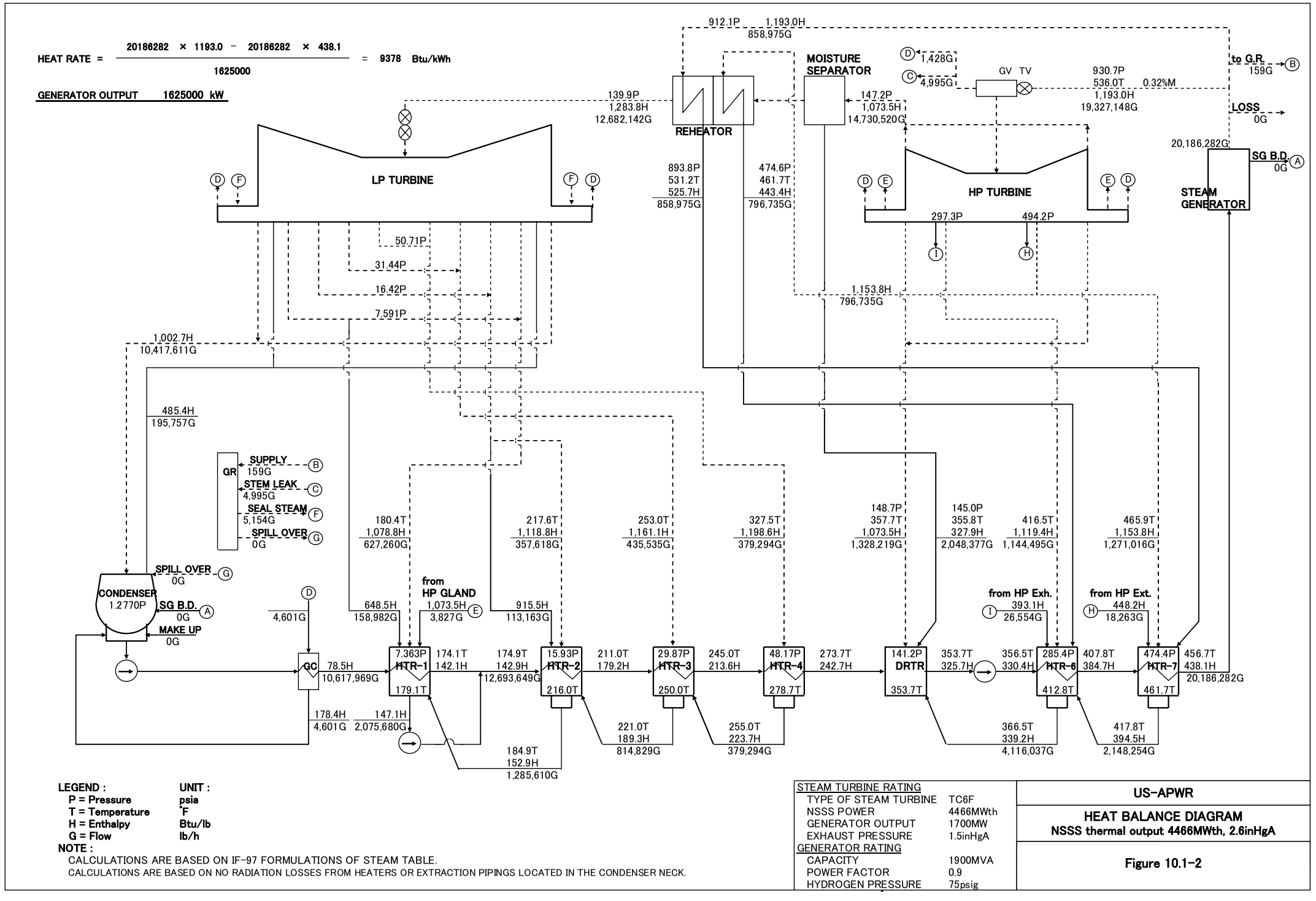

Figure 10.1-2 Heat Balance Diagram Rated Condition (Cond. pressure. : 2.6inHgA)

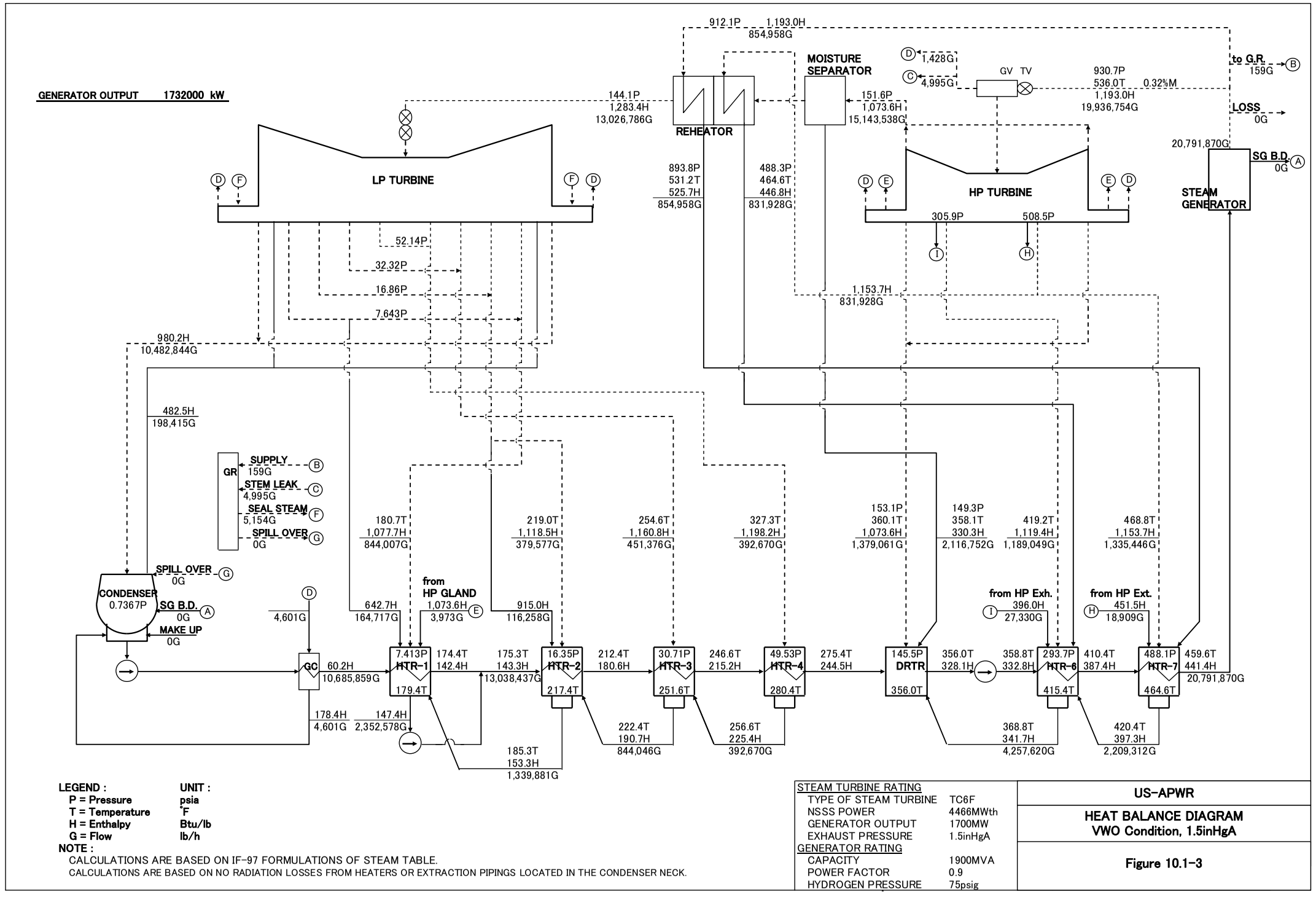

Figure 10.1-3 Heat Balance Diagram VWO Condition (Cond. pressure. : 1.5inHgA)

10.2 Turbine-Generator (T/G)

10.2.1 Design Bases

10.2.1.1 Safety Design Bases

The T/G does not serve a safety-related function and therefore has no nuclear safety design basis. Classification of the equipment and components of the T/G in regard to the seismic and quality group is provided in Section 3.2.

The T/G could be potential source of high-energy turbine missiles, which could cause damage to safety-related equipment or systems. The turbine is designed to minimize the possibility of turbine missile generation as discussed in Subsection 10.2.3. The turbine control system and main valves arrangement is designed to minimize the possibility of turbine missile generation and is discussed in Subsection 10.2.2 in detail.

10.2.1.2 Non-Safety Power Generation Design Bases

The following is a list of the major design features of the T/G:

- The T/G is designed for base load operation and for load follow operation.
- The T/G is designed for electric power production consistent with the capability of the reactor and the reactor coolant system.
- The gross generator output at the rated thermal power of the reactor and at VWO condition is shown in the heat balance diagrams in Figure 10.1-2 and Figure 10.1-3 respectively.
- The T/G is designed to trip automatically under abnormal conditions such as overspeed greater than 110% of the rated speed. The turbine control system is designed to control the rotating speed within the range which does not activate the emergency trip system, and is also designed to trip the T/G at the failure of the control system. The redundant emergency trip system is designed to prevent rotating speed from exceeding design overspeed.
- The T/G is designed to allow periodic on-line testing on the main valves (main turbine stop valve (MTSV), main turbine control valves (MTCV), reheat stop valve (RSV) and intercept valve (IV)), emergency trip system and other protection devices.
- The system and component arrangement is designed so that any single component failure will not cause exceeding design overspeed.
- The system is designed to provide proper drainage of related piping and components to prevent water induction into the main turbine.
- Nonreturn valves are served on extraction steam piping to prevent water induction by checking reverse flow into turbine. Each valve is swing type and is equipped actuator as backup to assist closure action. In view of turbine overspeed protection, the piping

volume between the nonreturn valve and the turbine extraction connection must be minimized as practical.

- The moisture separator/reheaters (MS/Rs), MS/R drain tanks, generator stator cooling water demineralizer, stator cooling water tank, seal oil drain regulator, lubricant oil cooler and accumulator are designed to ASME Code Section VIII requirements (Reference 10.2-1). The other parts are designed to the T/G manufacturer's standards.

10.2.2 Description

10.2.2.1 General Description

The T/G is an 1800rpm tandem compound six exhaust flow unit consisting of one double-flow high-pressure turbine (HPT x 1), three double-flow low-pressure turbines (LPT x 3), a generator, two sets of external moisture separator/reheaters (MS/Rs), exciter, controls, and auxiliary subsystems (see Figure 10.2-1). The major design parameters of the T/G and auxiliaries are presented in Table 10.2-1. The flow diagram Figure 10.3-4 shows the stop, control, intercept, and reheat stop valves.

The T/G and associated piping, valves, and controls are located completely within the turbine building. There are no safety-related systems or components located within the turbine building. The probability of a destructive overspeed condition and missile generation, assuming the recommended inspection and test frequencies, is less than 1 x 10^{-5} per year in accordance with NUREG-800 SRP Subsection 3.5.1.3, turbine missiles (Reference 10.2-2). In addition, the orientation of the T/G is such that a high-energy missile to be directed at an approximately 90 degree angle away from safety-related structures, systems, and components. The layout drawings that show the general arrangement of the T/G and associated equipment in relation to essential safety-related SSC are shown in Section 1.2, Figure 1.2. Failure of the T/G equipment does not preclude safe shutdown of the reactor. The T/G components and instrumentation associated with protecting the T/G from an overspeed condition are accessible under operating conditions.

The T/G foundation is a reinforced concrete structure. The T/G foundation and equipment anchorage are designed to the same seismic design requirement as the turbine building. See Section 3.7 for additional information on seismic design requirements.

10.2.2.2 Component Description

The T/G train consists of one double-flow high-pressure turbine, three double-flow low-pressure turbines and one generator. Two external MS/Rs with two stages of reheating are located on each side of the T/G centerline. The single direct-driven generator is water-cooled and rated at 1,900 MVA at 0.9 PF. Other related system components include a complete T/G bearing lubrication oil system, a Digital electro-hydraulic (DEH) control system with supervisory instrumentation, a turbine gland seal system (see Subsection 10.4.3), overspeed protective devices, turning gear, a stator

coil cooling water system, H_2 & CO_2 gas control system and seal oil system, a rectifier section, and a voltage regulator.

10.2.2.2.1 Main Turbine Stop Valve and Main Turbine Control Valves (MTSV & MTCV)

The function of the MTSV is to quickly shut off the main steam flow to the turbine when the MTSVs receives a trip signal. The main function of the MTCV is to regulate the main steam flow to the turbine through the control system.

Main steam from the steam generators (SGs) enters the high-pressure turbine through four horizontally-mounted plug-type MTSVs and four plug-type MTCVs. Main steam flow through one MTSV is combined with main steam flow from the other MTSVs in the steam chamber. Two MTCVs, located in the steam chamber, direct the main steam flow to the high-pressure turbine inlet stage. There are two sets of steam chambers that are located on both sides of high-pressure turbine casing.

MTSVs are operated in on-off mode by a signal from the emergency trip system or solenoid valve for testing.

The MTSV incorporates a pilot valve. When the turbine is started, the MTCVs are fully open and the pilot valve of the MTSV is operated with full arc admission so that the turbine parts can be uniformly heated during the start-up process.

Steam strainers are located at the inlet of each MTSVs.

10.2.2.2.2 High-Pressure Turbine (HPT)

The main steam enters the HPT through the four MTCVs and the lead pipes and expands across several stationary and rotating blades axially in both the governing and generator side directions. The HPT has two extraction connections. One extraction connection supplies heating steam to both the No. 7 (final) high-pressure feedwater heaters and first stage reheater while the other extraction connection supplies heating steam to the No. 6 high-pressure feedwater heaters. Steam is exhausted to the external MS/Rs through exhaust connection taps and cross-under pipes. Part of the HPT exhaust steam is supplied to deaerating feedwater heater.

The HPT rotor is machined from an alloy steel forging (mono block design). A separate extension shaft, which is bolted to the governor end of the rotor, carries the main oil pump and overspeed trip weight.

After assembly of the HPT rotor, the high speed balance test and overspeed test up to 120% is carried out to confirm the integrity of the HPT rotor.

10.2.2.2.3 External Moisture Separator/Reheaters (MS/R)

MS/Rs employ a two-stage reheater. The first stage reheater uses the extraction steam from the high-pressure turbine and the second stage reheater uses a portion of the main steam supply to reheat the steam to a superheated condition. The reheated steam flows

through a separate reheat stop valve and intercept valve (RSV and IV) in each of six cross-over pipes leading to the inlets of the three low-pressure turbines.

The external MS/Rs use multiple banks of chevron-skip vanes (shell side) for moisture removal. The moisture removed by the external moisture separator is drained to a moisture separator drain tank and is pumped to the deaerator (deaerating feedwater heater).

Condensed steam in the reheater (tube side), which is drained to the reheater drain tank, flows into the shell side of the No. 6 and 7 feedwater heaters, and cascades to the deaerator (deaerating feedwater heater).

10.2.2.2.4 Reheat Stop Valves and Intercept Valves (RSV and IV)

One pair of RSV and IV is installed in each cross-over pipe from the external moisture separator/reheater to the low-pressure turbines. There are a total of six pairs of RSVs and IVs.

The RSV is a butterfly-type valve and operated in on-off mode to prevent the T/G from exceeding design overspeed in response to the signal from the emergency trip system. The IV is also a butterfly-type valve and is operated through the turbine control system.

10.2.2.2.5 Low-Pressure Turbine (LPT)

There are three double flow LPTs with 74-inch last stage blades. Reheated steam enters each of the LPTs through the RSV and the IV and expands in the blade path axially through stationary and rotating blades.

The fourth, fifth, sixth and seventh extraction points of the LPT supply steam to the low-pressure feedwater heaters No. 4, 3, 2, and 1, respectively.

Moisture is removed at a number of locations along the blade path. Drainage holes drilled through the blade rings provide moisture removal from blade rings located in high moisture zones. The effectiveness of moisture removal at these locations is enhanced by moisture non-return catchers which trap a large portion of the water from the blade path and direct it to the moisture removal system.

The LPT rotors are machined from an alloy steel forging (mono block design).

After assembly of the LPT rotor, the high speed balance test and overspeed test up to 120% is carried out to confirm the integrity of the LPT rotor.

10.2.2.2.6 Generator

The generator is a direct-driven, three-phase, 60Hz, 1800 rpm, four-pole synchronous generator with a water-cooled stator and hydrogen cooled rotor. The generator auxiliaries include a seal oil system, H_2 & CO_2 gas control system and stator-coil cooling water system. The generator excitation is static type.

10.2.2.2.6.1 Generator Cooling System

The generator is cooled by a recirculating hydrogen gas stream which is in turn cooled by gas-to-water heat exchangers. Cold gas is forced by blowers into the ventilating passage of the rotor and around the stator core through ventilating holes.

The stator winding is water cooled. Stator coil cooling water, which is fed from one side of the coils, absorbs heat from the coils, and is discharged to the opposite side.

Rotor coils are cooled internally by the gas which passes through the axial ducts in the coil. The gas absorbs heat from the rotor coils and flows to the blowers. After the gas has passed through the generator, it returns the gas-to-water heat exchangers.

10.2.2.2.6.2 Generator Stator

The generator stator frame consists of a gas-tight cylindrical casing of welded plate construction that is reinforced internally by bracing in both the radial and axial directions to provide a rigid structure.

The stator core consists of high-quality silicon steel sheets. These sheets are punched out in a sector shape and coated on both sides with an insulating varnish which is baked on.

The stator coil is constructed as a double layer, half coil and end connected to form a complete winding after insertion into slots in the stator core. The conductor of each stator coil consists of glass-sheathed rectangular copper bars.

10.2.2.2.6.3 Generator Rotor

A major portion of the generator rotor is machined from a single alloy steel forging. The rotor conductors use cold-drawn silver-bearing copper. Rotor coil ends are supported by floating type retaining rings, which are shrink-fitted over the rotor body. The retaining rings are fabricated of 18% manganese - 18% chromium stainless steel.

10.2.2.2.6.4 Seal Oil System

The double-flow-type seal oil system is used to seal hydrogen gas where the shaft penetrates a gas tight enclosure of the generator.

The seal oil system supplies seal rings with oil to prevent the escape of hydrogen gas from the generator, without introducing an excessive amount of air and moisture into the generator, and keeps a constant differential pressure between the supply-oil pressure and the generator internal gas pressure.

10.2.2.2.6.5 H_2 & CO_2 Gas Control System

The H_2 & CO_2 gas control system supplies, maintains, and removes the hydrogen (H_2) gas and carbon dioxide (CO_2) gas to and from the generator.

The hydrogen gas is used as a cooling medium in the generator, and the carbon dioxide gas is used during filling and removal of the hydrogen gas to and from the generator to prevent the air and the hydrogen gas from mixing. The hydrogen gas and carbon dioxide gas are supplied from a Bulk Gas Storage system.

10.2.2.2.6.6 Stator Coil Cooling Water System

For the stator coil water-cooled turbine generator, heat loss generated in the stator coil is removed by circulating high-purity water ("stator cooling water") inside the hollow conductor of the stator coil. The high-purity water is cooled in water-to-water heat exchangers by circulating water from TCS.

The stator coil cooling water system provides the high-purity demineralized water to the generator stator coils.

10.2.2.2.7 Exciter

The excitation system is a static exciter with a solid-state voltage regulator. Excitation power is obtained from the exciter transformer, which is connected to the main generator circuit. The static exciter consists of three parts: exciter transformer, ac and dc bus duct, and a rectifier. The exciter rectifiers are arranged in a full-wave bridge configuration and protected by a series-connected fuse.

10.2.2.3 Control Function

10.2.2.3.1 Turbine Control System

The T/G is equipped with a DEH system that combines the capabilities of a redundant microprocessor and high-pressure hydraulics to regulate steam-flow through the turbine. The DEH system allows speed control, load control, and automatic turbine control (ATC) which may be used, either for control or for supervisory purposes, at the option of the plant operator.

The DEH system employs three electric speed inputs whose signals are processed in redundant microprocessors. Valve-opening actuation is provided by a hydraulic system that is independent of the bearing lubrication system. Valve-closing actuation is provided by springs and steam forces in the event of a reduction in or relief of fluid pressure. The system is designed so that loss of fluid pressure, for any reason, leads to valve-closing and a consequent turbine trip.

Steam valves are provided in a series of pairs. The valves are positioned by the emergency trip system and DEH system.

10.2.2.3.1.1 Speed Control

The speed control function of the DEH system provides speed control, acceleration, and overspeed protection. The speed control function produces a speed error signal, which is fed to the load control function. The speed error signal is derived by comparing the

desired speed with the actual speed of the turbine at steady-state conditions or by comparing the desired acceleration rate with the actual acceleration rate during startup.

The speed select algorithm receives three speed signals, performs a medium signal selector, compares the result to the speed reference signal, and transmits the error signal to the speed controller demanding the appropriate speed. The failure of one speed input generates an alarm and the turbine continues operating using proper speed signals. Failure of two or more speed inputs also generates an alarm and the turbine will be tripped automatically.

The DEH system consists of two redundant microprocessors, one is in the control mode and the other is in the standby mode. If the one in the control mode fails, the other one in the standby mode takes over automatically. If the one in the standby mode fails, the other one maintains control. The turbine is tripped automatically in the event that both of them fail to perform their function.

10.2.2.3.1.2 Load Control

The load control function of the DEH system develops signals that are used to regulate the unit load. Signal outputs are based on a proper combination of speed error and actual load (turbine megawatt) reference signals.

Steam-flow is not controlled directly but rather by turbine megawatt and valve position. Under normal conditions, the turbine requests a certain megawatt load target. Through a coordinated mode of control, the turbine valves adjust the steam flow from the steam generators supplied to the turbine.

10.2.2.3.1.3 Valve Control

The flow of the main steam entering the high-pressure turbine is controlled by four main turbine stop valves (MTSVs) or four main turbine control valves (MTCVs). Each MTSV is controlled by electro hydraulic servo actuators in response to the signals from the DEH system. When the turbine is placed in operation, the MTCVs are fully opened and the MTSVs are modulated. The function of the MTSVs is to shut off the steam flow to the turbine when required. The MTSVs are closed by actuation of the emergency trip system devices. These devices are independent of the DEH system.

The MTCVs are positioned by electro hydraulic servo actuators in response to the signals from the DEH system. When the turbine speed reaches the rated speed using the MTSVs, the MTCVs are fully open. During turbine operation, the MTCVs are modulated by the DEH system and MTSVs are fully open, MTCVs and MTSVs are completely closed on turbine trip.

The reheat stop and intercept valves (RSVs & IVs), located in the cross-over pipes at the inlet to the low-pressure turbines, control steam-flow to the low-pressure turbines. During normal operation of the turbine, the RSVs and IVs are fully open. The IVs are controlled by electro hydraulic servo actuators in response to the signals from the DEH system during startup and normal operations and they close rapidly on loss of turbine load and turbine trip. The RSVs close completely on turbine overspeed and turbine trip.

The MTSVs, MTCVs, RSVs and IVs have dump valves connected to the hydraulic portion of their respective valve actuators. Opening a dump valve causes the connected control or stop valve to rapidly close. The dump valve actuators are connected to trip headers and open in response to loss of pressure in the connected emergency trip header. The control and intercept dump valves are connected to the DEH overspeed protection control emergency trip header and the stop and reheat stop dump valves are connected to the emergency trip header. In the event of OPC actuation, only the control fluid pressure of DEH overspeed protection control header is decreased via a check valve. Therefore, the emergency trip system is independent of the DEH overspeed protection system.

10.2.2.3.1.4 Power/Load Unbalance

A power/load unbalance circuit initiates fast closing of the MTCVs and the IVs under load rejection conditions that might lead to rapid rotor acceleration and consequent overspeed.

Valve action occurs when the power/load unbalance exceeds the load by 30 percent or more. LPT inlet steam pressure is used as a measure of turbine power. Generator current is used as a measure of generator load to provide discrimination between a loss of load incident and an electric system fault.

When a power/load unbalance condition is detected, the OPC solenoid valves are quickly energized to close the MTCVs and the IVs. When the condition clear, the power/load unbalance circuitry resets automatically, and the OPC solenoid valves are reset.

10.2.2.3.1.5 Overspeed Protection

The DEH system has two modes of operation to protect the turbine against overspeed. The first mode is the speed control which maintains the desired speed as discussed in Subsection 10.2.2.3.1.1. The second mode is the overspeed protection control which operates if the normal speed control should fail or upon a loss of load. An overspeed protection demand is sent to the OPC solenoid valve for MTCVs and IVs. The solenoid valve is energized and a drain path for the hydraulic fluid opens in the overspeed protection control header, if the turbine speed exceeds 103 percent of the rated speed. The loss of fluid pressure in the header causes the MTCVs and the IVs to close. If the speed falls below rated speed following an overspeed protection controller action, the header pressure is reestablished, the MTCVs and the IVs are reopened, and the unit resumes speed control. Refer to Table 10.2-2 for a description of the sequence of events following a full loss of load and the nominal trip setpoints. An emergency trip system is also provided to trip the turbine in the event that speed in exceeds of the overspeed protection trip points. The emergency trip system is discussed in Subsection 10.2.2.3.2.1.

Redundancy is built into the overspeed protection control in the DEH system. The failure of a single OPC solenoid valve will not disable the trip functions. Loss of hydraulic pressure in the emergency trip system causes the turbine to trip. Therefore, damage to the overspeed protection components, results in the closure of the valves and the interruption of steam-flow to the turbine.

Quick closure of the steam valves prevents turbine overspeed. Valve closing times are given in Table 10.2-4.

10.2.2.3.1.6 Automatic Turbine Control (ATC)

The ATC provides safe and proper startup and loading of the turbine generator. The ATC programs monitor the applicable limits and precautions during turbine operation even if the ATC mode is not selected by the operator. When the operator selects ATC mode, the programs both monitor and control the turbine. The DEH system uses the computer to scan, calculate, make decisions, and take positive action during turbine operation.

The ATC is capable of automatically:

- Changing speed
- Changing acceleration
- Generating speed holds
- Changing load rates
- Generating load holds

The thermal stresses in the rotor are calculated by the ATCs programs based on actual turbine steam and metal temperatures as measured by thermocouples or other temperature measuring devices. Once the thermal stress (or strain) is calculated, it is compared to the allowable value, and the difference is used as an index of the permissible first stage inlet temperature variation. This permissible temperature variation is translated in the computer program as an allowable speed or load or rate of change of speed or load.

The values of some parameters are stored for use in the prediction of their future values or rates of change. These predictions are used to initiate corrective measures before alarm or trip points are reached.

The rotor stress (or strain) calculations used in the ATC program, and its decision-making counterpart, are the primary control inputs during turbine operation. They allow the unit to operate with relatively high acceleration until the program predicts that the stress valves are about to approach their limit. It these limits are about to be reached then a lower acceleration value is selected and, if the condition persists, a speed hold is generated. The same philosophy is used on load control in order to maintain positive control of the loading rates.

The ATCs programs are stored and executed in a redundant distributed processing unit, which contains the function of the rotor stress programs and the majority of the ATCs logic programs. Once the turbine is reset, the ATC programs are capable of switching the turbine from turning gear to synchronous speed with supervision.

Once the turbine-generator reaches synchronous speed, the startup or speed control phase of the ATC is completed and no further action is taken by the programs. Upon closing the main generator breaker, the DEH automatically picks up approximately 5 percent of the rated load to prevent motoring of the generator. At this time, the DEH system is in load control.

The DEH system is equipped with a remote control interface. Selection of the remote mode provides for control of the turbine-generator from an operator console. In the remote mode, the rate of load change is controlled by the operator console.

In the combined mode of both the remote control and the ATC, the ATC allows the remote control system control of load changes until an alarm condition occurs. If the operating parameters being monitored (including rotor stress) exceed their associated alarm limit, a load hold is generated in conjunction with the appropriate alarm message. The DEH system generates the load hold by ignoring any further load increase or decrease until the alarm condition is cleared or until the operator overrides the alarm condition. At the same time that the DEH system generates the load hold based on the ATC alarm condition, the DEH system also informs the remote control system of its action. In the combined mode of control, both the load reference and the load rate are implicitly controlled by the remote control system while the ATC supervises the load changes with overriding control capability.

The operator may remove the turbine-generator from ATC. This action places the ATC in a supervisory capacity.

10.2.2.3.2 Turbine Protection System

When initiated, turbine protective trips, cause tripping of the main stop, control, intercept, and reheat stop valves. The protective trips are:

- Low bearing oil pressure
- Low emergency trip header pressure
- Low condenser vacuum
- Turbine overspeed
- Thrust bearing wear
- High exhaust hood temperature
- High shaft vibration
- Low shaft-driven lube oil pump discharge pressure
- Remote trip that accepts external trips

A description of the trip system for turbine overspeed is provided below.

10.2.2.3.2.1 Emergency Trip System

The purpose of the emergency trip system is to detect undesirable operating conditions of the turbine-generator, take appropriate trip actions, and provide information to the operator about the detected conditions and the corrective actions. In addition, means are provided for testing the emergency trip equipment and circuits.

The system utilizes a two channel configuration which permits on-line testing with continuous protection afforded during the test sequence. A mechanical overspeed trip is also provided as described in Subsection 10.2.2.3.2.3.

The emergency trip system includes the emergency trip control block, trip solenoid valves, the mechanical overspeed trip device, speed sensors, and a test panel. These items and the function of the overspeed trips are described in the following three subsystems.

10.2.2.3.2.2 Emergency Trip Control Block

The emergency trip header pressure is established when the turbine trip solenoid valves are energized when closed. The valves are arranged in two channels for testing purposes, the odd numbered pair corresponds to channel 1, and the even numbered pair corresponds to channel 2. This convention is followed throughout the emergency trip system in designating devices; i.e., channel 1 devices are odd-numbered, and channel 2 devices are even-numbered. Both valves in a channel will open to trip that channel. At least one solenoid valve in both channels must open before the trip header pressure reduces to close the turbine steam inlet valves. Each tripping function of the electrical emergency trip system can be individually tested from the operator/test panel without tripping the turbine by separately testing each channel of the appropriate trip function. The solenoid valves may be individually tested. Spool-type solenoid valves are not used in the emergency trip control block.

A trip of the emergency trip system opens a drain path for the hydraulic fluid in the emergency trip header. The loss of fluid pressure in the trip header causes the main stop and the reheat stop valves to close. Also, check valves in connection with the overspeed protection control header open to drop the pressure in the overspeed protection control header and cause the control and intercept valves to close. The control and intercept valves are redundant to the main stop and reheat stop valves respectively.

10.2.2.3.2.3 Overspeed Trip Functions and Mechanisms

The emergency overspeed trips consist of a mechanical and an electrical trip. The mechanical emergency overspeed trip actuates before the electrical emergency trip. The emergency overspeed trip setpoints are identified in Table 10.2-2.

The mechanical overspeed trip device consists of a spring-loaded trip weight mounted in the rotor extension shaft. At normal operating speed, the weight is held in the inner position by the spring. When the turbine speed reaches the trip setpoint, the centrifugal force overcomes the compression force of the spring and throws the trip weight outward striking a trigger. As the trigger moves, it unseats a cup valve which drains the

mechanical overspeed and manual trip header. The mechanical overspeed and manual trip header can be tripped manually via a trip lever mounted on the governor pedestal. The mechanical overspeed and manual trip are installed equipment for hydraulic test which can test without overspeed of the turbine shaft. If it is tested on site, trip weight will fall out after opening manual test valve with pulling a lever and mechanical overspeed trip equipment will be operated. After operating, trip operation can be confirmed because hydraulic pressure which detect mechanical overspeed trip is decreased rapidly. The mechanical overspeed and manual trip is tested remotely from the center online. If the test solenoid valve for the overspeed trip is excited after making the mechanical overspeed trip system a test mode with the lockout solenoid valve, trip weight will be operated. After operating, trip operation can be confirmed because automatic stop oil and hydraulic pressure which detect mechanical overspeed trip is decreased.

The electrical overspeed trip system has separate, redundant speed sensors and provides backup overspeed protection utilizing the trip solenoid valves in the emergency trip control block to drain the emergency trip header. The hydraulic fluid in the trip and overspeed protection control headers is independent of the bearing lubrication system to minimize the potential for contamination of the fluid.

The emergency trip header of the control fluid system and the manual trip header of the lubricating oil system are interconnected via the interface piston valve. The interface piston valve is normally closed under the autostop fluid header pressure of the manual trip header of the lubricating oil system, which establishes the control fluid pressure in the emergency trip header of the control fluid system.

The speed control and overspeed protection function of the DEH combined with the emergency trip system and electrical and mechanical overspeed trips provide a level of redundancy and diversity at least equivalent to the recommendations for turbine overspeed protection found in III.2 of the Standard Review Plan (NUREG-0800) Section 10.2 (Reference 10.2-3). Additionally, the issues and problems with overspeed protection systems identified in NUREG-1275 have been addressed (Reference 10.2-4).

10.2.2.3.2.4 Test Blocks

Low bearing oil pressure , Low main oil pump discharge pressure and Low condenser vacuum are each sensed by separate test block instrumentation. Each test block assembly consists of a steel test block, two pressure indications, two manual valves, two solenoid valves, and four pressure switches. Each assembly is arranged into two channels. The assemblies, mounted on the governor pedestal, are connected to pressure sensors mounted in a nearby terminal box. The assemblies have an orifice on the system supply side and are connected to a drain or vent on the other side. An orifice is provided in each channel so that the measured parameter is not affected during testing. An isolation valve on the supply side allows the test block assembly to be serviced.

If the medium (pressure or vacuum) reaches a trip setpoint, then the pressure sensors cause the emergency trip header mechanism to operate. When functionally testing an individual trip device, the medium is reduced to the trip setpoint in one channel either locally through the hand test valves or remotely from the trip test panel via the test solenoid valves.

10.2.2.3.2.5 Thrust Bearing Trip Device

Three sets of position pickups, which are part of the turbine supervisory instrument package, monitor movement of a disc mounted on the rotor near the thrust bearing collar. Axial movement of this collar is reflected in the movement of the disc. Excessive movement of the disc is an indication of thrust bearing wear. Should excessive movement occur, supervisory instrument modules close and initiate a turbine trip.

10.2.2.3.2.6 Remote Trip

The emergency trip system can also trip the turbine in response to a signal from the plant control system or plant safety and monitoring system.

10.2.2.3.2.7 Other Protective Systems

Additional protective features of the turbine and steam system are:

- Moisture separator reheater safety relief valves
- Rupture diaphragms located on each of the low-pressure turbine cylinder covers
- Turbine water induction protection systems on the extraction lines. The extraction line isolation valves and nonreturn valves close, and drain valves open, following a turbine trip signal.

10.2.2.3.3 Turbine Generator Supervisory Instrumentation

- The turbine-generator is provided with turbine supervisory instrumentation including monitors for the following:
- Speed*
- MTSV position
- MTCV position
- RSV and IV positions
- Temperatures as required for controlled starting, including:
  - Steam chest inner surface
  - Steam chest outer surface
  - First-stage inlet lower inner surface
  - Cross-over pipe downstream of RSV No. 1
  - Cross-over pipe downstream of RSV No. 2
  - Cross-over pipe downstream of RSV No. 3

- Cross-over pipe downstream of RSV No. 4
- Cross-over pipe downstream of RSV No. 5
- Cross-over pipe downstream of RSV No. 6

- Casing and shaft differential expansion*
- Vibration of each bearing*
- Shaft eccentricity*
- Bearing metal temperature
- Bearing oil temperature

Alarms are provided for the following abnormal conditions:

- High vibration*
- Turbine supervisory instruments failure alarm*

Note: * mark monitors are included in TSI System. Others are for monitoring.

- Indications of the following miscellaneous parameters are provided:
- Main steam throttle pressure
- Steam seal supply header pressure
- Steam seal condenser vacuum
- Bearing oil header pressure
- Bearing oil coolers coolant temperature
- DEH control fluid header pressure
- DEH control fluid temperature
- Cross-over pressure
- Moisture separator drain tank level
- First-stage inlet pressure
- High-pressure turbine exhaust pressure
- Extraction steam pressure, each extraction point
- Low-pressure turbine exhaust hood pressure

- Exhaust hood temperature for each exhaust

Generator supervisory instruments are provided, with sensors and/or transmitters mounted on the associated equipment. These indicate or record the following:

- Stator winding temperature (three detectors per phase)
- Stator coil cooling water temperature (one detectors per coil)
- Hydrogen cooler inlet and outlet gas temperature (two detectors at each point)
- Hydrogen gas pressure
- Hydrogen gas purity
- Generator ampere, voltage, and power

Additional generator protective devices are listed in Table 10.2-3.

10.2.2.3.4 Plant Loading and Load Following

The T/G control system has the same loading and load following characteristics as the control system described in Section 7.7.

10.2.2.3.5 Inspection and Testing Requirements

Major system components are readily accessible for inspection and are available for testing during normal plant operation. Turbine trip circuitry is tested prior to unit startup. To test control valves with minimal disturbance, the load is reduced to that capable of being carried with one control valve closed.

The information of testing of the protective device is described in the following sections:

Emergency trip test	Section 10.2.2.3.2.2
EOST test	Included in Section 10.2.2.3.2.2
MOST test	Section 10.2.2.3.2.3
Low Bearing oil Trip Test	Section 10.2.2.3.2.6
Low Vacuum Trip Test	Section 10.2.2.3.2.6
Low MOP Discharge oil Trip Test	Section 10.2.2.3.2.6

10.2.3 Turbine Rotor Integrity

Turbine rotor integrity is provided by the integrated combination of material selection, rotor design, fracture toughness requirements, tests, and inspections. This combination results in a very low probability of a condition that could result in a rotor failure. For the verification that actual rotor material properties satisfy the material properties assumed and used in the turbine missile calculations, mechanical properties including fracture toughness are to be verified by the tests to conform to the applicable material specifications of turbine missile calculations. (Reference 10.2-9)

10.2.3.1 Materials Selection

Fully integral turbine rotors are made from ladle refined, vacuum deoxidized Ni-Cr-Mo-V alloy steel by processes that maximize the cleanliness and toughness of the steel. The lowest practical concentrations of residual elements are obtained through the melting process. The turbine rotor material complies with the chemical property limits of ASTM A470 (Reference 10.2-5). The specification for the rotor steel has lower limitations than indicated in the ASTM standard (Reference 10.2-5) for phosphorous, sulphur, aluminum and antimony. This material has the lowest fracture appearance transit temperatures (FATT) and the highest Charpy V-notch energies obtainable on a consistent basis from water-quenched Ni-Cr-Mo-V material at the sizes and strength levels used. Charpy tests and tensile tests are in accordance with ASTM, A370 (Reference 10.2-6). A minimum of three Charpy test specimens are tested using the impact test criteria that satisfy ASTM A470 Grade C (Class 6).

The production of steel for the turbine rotors starts with the use of high-quality, low residual element scrap. An oxidizing electric furnace is used to melt and dephosphorize the steel. Ladle furnace refining is then used to remove oxygen, sulphur, and hydrogen from the rotor steel. The steel is then further degassed using a process whereby steel is poured into a mold under vacuum to produce an ingot with the desired material properties. This process minimizes the degree of chemical segregation since silicon is not used to deoxidize the steel.

10.2.3.2 Fracture Toughness

Suitable material toughness is obtained through the use of materials described in Subsection 10.2.3.1 to produce a balance of material strength and toughness to provide safety while simultaneously providing high reliability, availability, and efficiency during operation. The restrictions on phosphorous, sulphur, aluminum, antimony, tin, argon, and copper in the specification for the rotor steel provides for the appropriate balance of material strength and toughness. The impact energy and transition temperature requirements are more rigorous than those given in ASTM A470 Class 6 or 7 and their equivalents.

Stress calculations include components due to centrifugal loads and thermal gradients where applicable. Fracture toughness will be at least 200ksi·in$^{1/2}$ (220MPa·m$^{1/2}$). For the purpose of conservative evaluation, fracture analysis is to be done using a fracture toughness with margin against minimum expected values on the rotors. The material

fracture toughness needed to maintain this conservative margin is verified by mechanical property tests on material taken from the rotor.

The rotor is evaluated for fracture toughness by criteria that include the design duty cycle stresses, number of cycles, ultrasonic examination capability and growth rate of potential flaws. Conservative factors of safety are included to account for the amount of uncertainty in the potential or reported ultrasonic indications of flaws, rate of flaw growth (da/dN versus dK) and the duty cycle stresses and number.

Reported rotor forging indications are adjusted to account for the amount of uncertainty and interaction. A rotor forging with a reported indication that would grow to a critical size in the applicable duty cycles is not accepted. The combined rotation and maximum transient thermal stresses used in the applicable duty cycles are based on the brittle fracture and rotor fatigue analyses described below.

Maximum transient thermal stresses are determined from historical maximum loading rates for nuclear service rotors.

10.2.3.2.1 Brittle Fracture

A brittle fracture analysis is performed on the turbine rotor to provide confidence that small flaws in the rotor, especially near the centerline, do not grow to a critical size with unstable growth resulting in a rotor burst. The brittle fracture analysis process includes determining the stresses in the rotor resulting from rotation, steady-state thermal loads, and transient thermal loads from startup and load change. These stresses are combined to generate the maximum stresses and locations of maximum stress for the startup and load change transients. A fracture mechanics analysis is performed at the location(s) of maximum stress to verify that an initial flaw, equal to the minimum reportable size, will not grow into critical crack size over the lifetime of the rotor under the cumulative effects of startup and load change transients.

A fracture mechanics analysis is done at the location(s) of maximum stress to determine the critical crack size and the initial flaw area that would grow just to the critical size when subjected to the number of startup and load change cycles determined to represent the lifetime of the rotor. This initial flaw area is divided by a factor of safety to generate an allowable initial flaw area. The minimum reportable flaw size is multiplied by a conservative factor to correct for the imperfect nature of a flaw as an ultrasonic reflector, as compared to the calibration reflector. The resulting area is the corrected flaw area. For an acceptable design, the allowable initial flaw area must be greater than or equal to the corrected flaw area.

For rotor contour, a surface connected elliptical crack is assumed. The flaw is assumed to be orientated normal to the maximum principle stress direction.

The beginning-of-life FATT for the high pressure and low pressure rotor is specified in the material specification for the specific material alloy selected. Both high pressure and low-pressure turbines operate at a temperature at which temperature embrittlement is insignificant. The beginning-of-life FATT is not expected to shift during the life of the rotor due to temperature embrittlement.

Minimum material toughness is provided by specification of the maximum FATT and minimum upper shelf impact energy for the specific material alloy selected. There is not a separate material toughness (K_{IC}) requirement for US-APWR rotors.

10.2.3.2.2 Rotor Fatigue Analysis

A fatigue analysis is performed for the turbine rotors to show that cumulative usage is acceptable for expected transient conditions including normal plant startups, load following cycling, and other load changes. A margin is provided by assuming a conservatively high number of turbine start and stop cycles. The turbine rotors in operating nuclear power plants were designed using this methodology and have had no history of fatigue crack initiation due to duty cycles.

In addition to the low cycle fatigue analysis for transient events, an evaluation for high cycle fatigue is performed. This analysis considers loads due to gravity bending and bearing elevation misalignment. The local alternating stress is calculated at critical rotor locations considering the bending moments due to the loads described above. The maximum alternating stress is less than the smooth bar endurance strength modified by a size factor.

The T/G is supported by a reinforced concrete foundation, which is designed so that the vertical deflection of beams, girders and columns/column-wall should not impose additional alternating stress on the T/G or shaft train considering the following factors:

- Condenser vacuum load
- Normal torque load
- Thermal load due to machine expansion-contraction
- Load due to temperature increase of the deck
- Piping load

The dynamic response of the T/G foundation including vibration amplitude and natural frequency analysis are analyzed to confirm that no additional alternating stress is imposed on the T/G shaft train.

10.2.3.3 Preservice Inspection

Preservice inspections for turbine rotors include the following:

- Rotor forgings are rough machined with a minimum stock allowance prior to heat treatment.
- Each rotor forging is subjected to a 100-percent volumetric (ultrasonic) examination. Each finish-machined rotor is subjected to a surface magnetic particle and visual examination. Results of the above examination are evaluated by use of criteria that are more restrictive than those specified for Class 1 components in ASME Code, Section III and V (Reference 10.2-7 and 10.2-8). These criteria include the

requirement that subsurface ultrasonic indications are either removed or evaluated to verify that they do not grow to a size which compromises the integrity of the unit during the service life of the unit.

- Finish-machined surfaces are subjected to a magnetic particle examination. No magnetic particle flaw indications are permissible in highly stressed regions.
- Each fully bladed turbine rotor assembly is spin tested at 120 percent overspeed, the maximum anticipated design overspeed at a load rejection from full load.

Rotor areas which require threaded holes are not subjected to a magnetic particle examination of the threaded hole. The number of threaded holes is minimized, and threaded holes are not located in high stress areas.

10.2.3.4 Turbine Rotor Design

The turbine assembly is designed to withstand normal conditions and anticipated transients, including those resulting in turbine trip, without loss of structural integrity. The design of the turbine assembly meets the following criteria:

- The design overspeed of the turbine is 5% above the highest anticipated speed resulting from a loss of load.
- The combined stresses of the low-pressure turbine rotor at design overspeed due to centrifugal forces and thermal gradients do not exceed 0.75 of the minimum specified yield strength of the material at design overspeed.
- The turbine shaft bearings are able to withstand any combination of the normal operating loads, anticipated transients, and accidents resulting in turbine trip.
- The natural critical frequencies of the turbine shaft assemblies existing between zero speed and 20% overspeed are controlled in the design and operation so as to cause no distress to the unit during operation.
- The turbine rotor design facilitates an inservice inspection of all high stress regions. All the turbine rotors use the mono-block rotor design instead of the conventional shrunk-on disk design.
- Tangential stresses will not cause a flaw, which is assumed to be twice the corrected ultrasonic examination reportable size, to grow to critical size in the design life of the rotor (refer to Subsection 10.2.3.2).

The low-pressure turbine has fully integral rotors forged from a single ingot of low alloy steel. This design is inherently less likely to have a failure resulting in a turbine missile than designs with shrunk-on discs. A major advantage of the fully integral rotor is the elimination of disc bores and keyways, which can be potential locations for stress risers and corrosive contaminant concentration. This difference results in a substantial reduction of rotor peak stresses, which in turn reduces the potential for crack initiation. The reduction in peak stress also permits selection of a material with improved ductility, toughness, and resistance to stress corrosion cracking.

The non-bored design of the high-pressure and low-pressure turbine rotor provides the necessary design margin by virtue of its inherently lower centerline stress. Metallurgical processes permit fabrication of the rotors without a center borehole. The use of solid rotor forgings was verified by an evaluation of the material removed from center-bored rotors for fossil power plants. This evaluation demonstrated that the material at the center of the rotors satisfied the rotor material specification requirements. Forgings for no-bore rotors are provided by suppliers who have been qualified based on bore material performance.

All the low-pressure turbine rotating blades are attached to the rotor using christmas tree, side entry type root.

10.2.3.5 Inservice Inspection

The inservice inspection program for the LP turbine provides assurance that rotor flaws that might lead to brittle failure of a rotor at speeds up to design speed will be detected. This inspection includes disassembly of the turbine at equal or less than 10-year intervals during plant shutdowns coincident with the inservice inspection schedule required by IWA-2430 of the 2007 Edition with 2008 Addenda of Section XI, Division 1 ASME Boiler & Pressure Vessel Code. Inspection of parts that are normally inaccessible when the turbine is assembled for operation (couplings, coupling bolts, turbine rotors, and low pressure turbine blades) is conducted.

The maintenance and inspection program plan for the turbine assembly and valves is based on turbine missile probability calculations, operating experience of similar equipment and inspection results. The turbine missile generation probability due to rotor material failure below design overspeed was submitted in Reference 10.2-9. The analysis of missile generation probability due to failure of the overspeed protection system is used to determine turbine valve test frequency and is described in Reference 10.2-10. The maintenance and inspection program includes the activities outlined below:

- This inspection consists of visual, surface, and volumetric examinations as indicated below:
  - Each rotor, stationary and the rotating blade path component is inspected visually and by magnetic particle testing on its accessible surfaces. Ultrasonic inspection of the side entry blade grooves is conducted. These inspections are conducted at intervals equal or less than 10 years for both high-pressure and low-pressure turbines.
  - A 100 percent surface examination of couplings and coupling bolts is performed.
  - The fluorescent penetrant examination is conducted on nonmagnetic components.
- At least one main steam stop valve, one main steam control valve, one reheat stop valve, and one intercept valve are dismantled approximately every 4 years during scheduled refueling or maintenance shutdowns. A visual and surface examination of the valve internals is conducted. If unacceptable flaws or excessive corrosion are

found in a valve, the other valves of the same type are inspected. Valve bushings are inspected and cleaned and bore diameters are checked for proper clearance.

- Main stop valves, control valves, reheat stop and intercept valves may be tested with the turbine online. The DEH control test panel is used to stroke or partially stroke the valves.
- Turbine valve testing is performed at quarterly intervals. The quarterly testing frequency is based on nuclear industry experience that turbine-related tests are the most common cause of plant trips at power. Plant trips at power may lead to challenges of the safety-related systems. Evaluations show that the probability of turbine missile generation with a quarterly valve test is less than the evaluation criteria.
- Extraction nonreturn valves are tested prior to each startup.
- Extraction nonreturn valves are tested locally by stroking the valve full open with air, then equalizing air pressure, allowing the spring closure mechanism to close the valve. Closure of each valve is verified by direct observation of the valve arm movement.

The Combined License Applicant is to establish a turbine maintenance and inspection procedure prior to fuel load.

10.2.4 Evaluation

Components of the turbine-generator are conventional and typical of those which have been extensively used in other nuclear power plants. Instruments, controls, and protective devices are provided to confirm reliable and safe operation. Redundant, fast actuating controls are installed to prevent damage resulting from overspeed and/or full load rejection. The control system initiates turbine trip upon reactor trip. Automatic low-pressure exhaust hood water sprays are provided to prevent excessive hood temperatures. Exhaust casing rupture diaphragms are provided to prevent low-pressure cylinder overpressure in the event of loss of condenser vacuum. The diaphragms are flange mounted and designed to maintain atmospheric pressure within the condenser and turbine exhaust housing while passing full flow.

Since the steam generated in the steam generators is not normally radioactive, no radiation shielding is provided for the turbine-generator and associated components. Radiological considerations do not affect access to system components during normal conditions. In the event of a primary-to-secondary system leak due to a steam generator tube leak, it is possible for the steam to become contaminated. Discussions of the radiological aspects of primary-to-secondary leakage are presented in Chapters 11.

10.2.5 Combined License Information

COL 10.2(1) Inservice Inspection

The Combined License Applicant is to establish a turbine maintenance and inspection procedure prior to fuel load.

10.2.6 References

10.2-1 Rules for Construction of Pressure Vessels, ASME Boiler and Pressure Vessel Code, Section VIII,Division 1.

10.2-2 U.S. Nuclear Regulatory Commission, Standard Review Plan for the Review of Safety Analysis Reports for Nuclear Power Plants, NUREG-800, Section 3.5.1.3 Rev.3, March 2007.

10.2-3 U.S. Nuclear Regulatory Commission, Standard Review Plan for the Review of Safety Analysis Reports for Nuclear Power Plants, NUREG-800, Section 10.2 Rev.3, March 2007.

10.2-4 U.S. Nuclear Regulatory Commission, Operating Experience Feedback Report - Turbine-Generator Overspeed Protection Systems, NUREG-1275, Vol. 11, April 1995

10.2-5 Standard Specification for Vacuum-Treated Carbon and Alloy Steel Forgings for Turbine Rotors and Shafts, ASTM A470

10.2-6 Standard Test Methods and Definitions for Mechanical Testing of Steel Products, ASTM A370

10.2-7 Rules for Construction of Nuclear Facility Components, ASME Boiler and Pressure Vessel Code, Section III

10.2-8 Nondestructive Examination, ASME Boiler and Pressure Vessel Code, Section V

10.2-9 Probability of Missile Generation from Low Pressure Turbines, MUAP-07028-P Rev.1 (Proprietary) and MUAP-07028-NP Rev.1 (Non-Proprietary), January 2011

10.2-10 Probabilistic Evaluation of Turbine Valve Test Frequency, MUAP-07029-P Rev.2 (Proprietary) and MUAP-07029-NP Rev.2 (Non-Proprietary), January 2011

Table 10.2-1 Turbine-Generator and Auxiliaries Design Parameters

Manufacturer Mitsubishi Heavy Industries, Ltd.	
Turbine	
Type	Tandem compound six exhaust flow
Number of elements	4 (one HPT and three LPTs)
Last-stage blade length (in.)	74
Operating speed (rpm)	1,800
Design condensing pressure (in. HgA)	1.5
Generator	
Expected generator output at 100% NSSS output (kW)	1,700,000
Power factor	0.9
Generator rating (kVA)	1,900,000
Hydrogen pressure (psig)	75
Moisture separator/reheater	
Moisture separator	Chevron vanes
Reheater	U-tube
Number	2 shell
Stages of reheating	2
Feedwater heating system	
Number of stages	7 (2 HP heaters, Deaerator and 4 LP heaters)

Table 10.2-2 Turbine Overspeed Protection

Percent of rated Speed (Approximate)	Event (see note)
100	Turbine initially is at valves wide open. Full load is lost. Speed begins to rise. When the breaker opens, the load drop anticipator immediately closes the control and the intercept valves if the load at the time of separation is greater than 30 percent.
101	Control and intercept valves begin to close.
103	The overspeed protection controller closes the control and the intercept valves until the speed drops below 103 percent.
110	The mechanical overspeed trip device drains emergency trip oil and closes the main turbine stop , the main turbine control, the intercept and the reheat valves.
111	The electrical overspeed trip system closes the main stop , the main turbine control, the intercept and the reheat stop valves based on a two-out-of-three trip logic system.

Note:

Following the above sequence of events, the turbine will approach but not exceed the design overspeed (120 percent of the rated speed).

Table 10.2-3 Generator Protective Devices Furnished with The Voltage Regulator Package

Device	Action	
• Generator minimum excitation limiter	Limiter	- maintains generator reactive power output above certain level (normally steady-state stability limit level)
	Alarm	- when limiter is limiting
• Generator maximum excitation limiter	Limiter	- maintains generator field voltage below certain voltage inverse time characteristics
	Alarm	- when limiter is timing
	Alarm	- when limiter is limiting
• Generator volts/hertz limiter	Limiter	- maintains machine terminal volts/Hertz ratio below certain level
	Alarm	- when limiter is limiting
• Generator automatic field ground detection	Alarm	- brush failure (alarms about 20 seconds)
	Alarm	- ground
• Regulator firing circuit - loss of thyristor firing pulse protection	Alarm	- loss of one firing circuit
	Unit Trip	- loss of both firing circuits
• Thyristor blown fuse detection	Alarm	- When one or more thyristor fuses in power drawers open
• Regulator loss of power supply (s) Protection	Alarm	- loss of one power supply
• Regulator loss of sensing protection	Alarm and ac regulator trip	- when regulator voltage transformer sensing is lost
• Power system stabilizer inservice instrumentation Indication	Indication	- lamps and contacts

Table 10.2-4 Turbine-Generator Valve Closure Times

Valve	Closing time (seconds)
MTSVs	0.3
MTCVs	0.3
IVs	0.3
RSVs	0.3
Extraction nonreturn valves	<1.0

(note) Closure time of extraction nonreturn valves refers to actuator operation time.

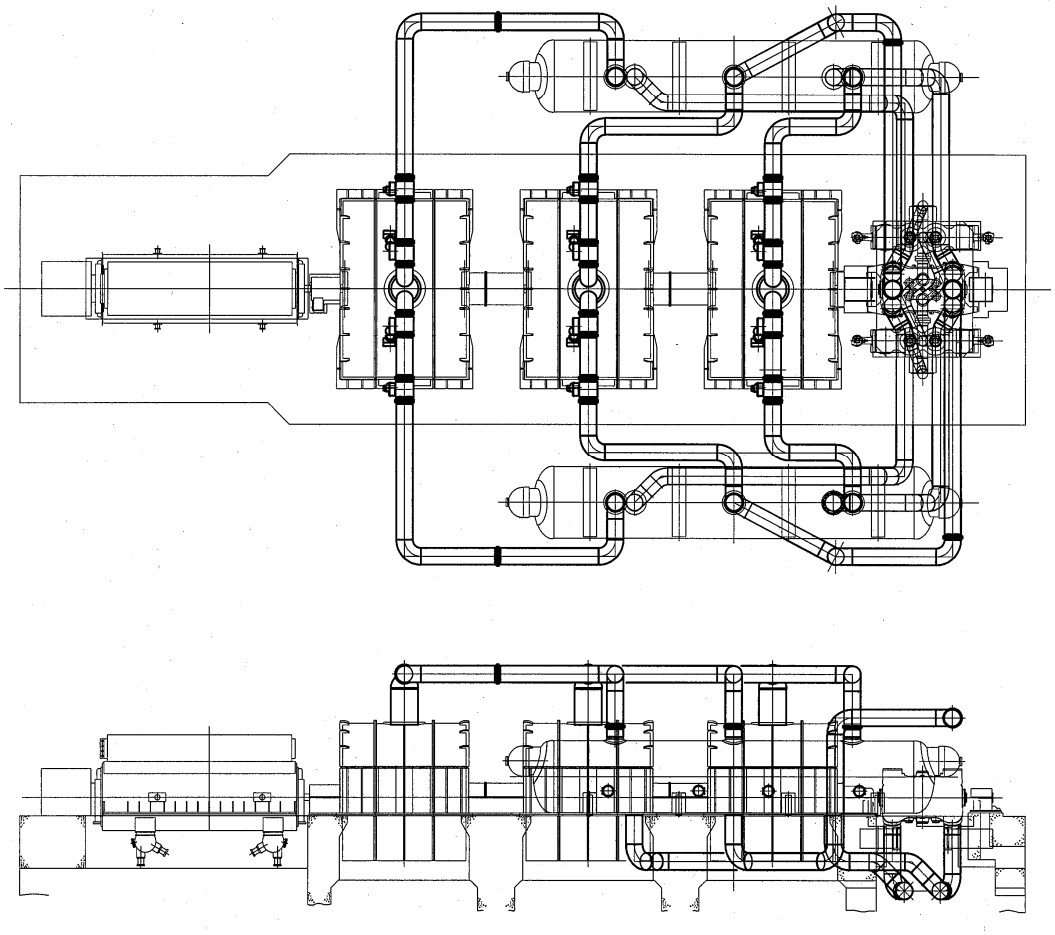

Figure 10.2-1 Turbine-Generator Outline Drawing

10.3 Main Steam Supply System

The main steam supply system (MSS) as described in this section runs from the US-APWR steam generator nozzle up to the main turbine stop valve, including the branch piping.

The main function of the MSS is to transport steam from the steam generators (SGs) to the high-pressure turbine and to the moisture separator reheater over a range of flows and pressures covering the entire operating range from system warmup to valve wide open (VWO) turbine conditions.

The system also supplies steam to the main turbine gland seal system, the emergency feedwater (EFW) pump turbine(s), the deaerator heater (heater no. 5) and the auxiliary steam supply system (ASSS). The system also dissipates heat generated by the nuclear steam supply system (NSSS) by means of turbine bypass valves (TBV) to the condenser or to the atmosphere through air-operated main steam relief valves (MSRV), or the motor-operated main steam depressurization valves (MSDV) or the spring-loaded main steam safety valves (MSSV) when either the turbine-generator or condenser is unavailable.

10.3.1 Design Bases

10.3.1.1 Safety Design Bases

The system is provided with a main steam isolation valve (MSIV) and an associated main steam bypass isolation valve (MSBIV) in each main steam line. These valves isolate the secondary side of the SGs to prevent the uncontrolled blowdown of more than one SG and isolate non safety-related portions of the system.

The MSS safety design bases are as follows:

Conformance to GDC 2 (Reference 10.3-1) assures that the SSC of the MSS can withstand the effects of natural phenomena, hence guaranteeing the capability of the system to perform its safety functions. The safety-related portions are protected from the effects of wind and tornado as described in Section 3.3; flood protection as described in Section 3.4; and seismic design as described in Section 3.7.

Conformance to GDC 4 (Reference 10.3-1) assures that the safety-related SSC of MSS are resistant to the effects of the environmental conditions associated with normal operation, maintenance, testing, and postulated accidents, including LOCAs. The design includes suitable protection so that dynamic effects, including internally generated missiles, pipe whipping, and discharging fluids due to equipment malfunctions and external events do not pose a threat to system integrity. The safety-related portions are protected from missile protection as described in Section 3.5; protection against dynamic effects associated with the postulated rupture of piping as described in Section 3.6; and environmental design as described in Section 3.11.

In conformance with GDC 5 (Reference 10.3-1), no equipment of MSS is shared between safety-related units to preclude consequential effects of malfunctioning components within the system.

Conformance to GDC 34 (Reference 10.3-1) assures redundant cooling capacity and the pressure relief capability of the MSS in conjunction with emergency feedwater system so that the components retain their safety functions in the event of single component failures.

In conformance with Regulatory Guide 1.155 (Reference 10.3-2), “Station Blackout”, and in compliance with 10 CFR 50.63 (Reference 10.3-3), the US-APWR is provided with an AAC (alternate ac) power source to cope with an SBO event. Refer to Section 8.4 for further details.

Conformance to Regulatory Guide 1.115 (Reference 10.3-4), “Protection Against Low-Trajectory Turbine Missiles”; Regulatory Guide 1.117, “Tornado Design Classification” for protection against tornadoes; and Regulatory Guide 1.29, “Seismic Design Classification” (Reference 10.3-5) that reflects US-APWR equipment class are demonstrated and discussed in Sections 3.5, 3.3, and 3.2, respectively.

Codes and standards used in the design of the MSS, quality group and seismic classification are identified in Section 3.2. The following MSS components are classified as Equipment Class 2, and are safety-related and are designed in accordance with American Society of Mechanical Engineers (ASME) Boiler and Pressure Vessel Code Section III (Reference 10.3-6), Class 2, seismic category I:

- All piping and valves from the SGs up to and including MSIV and MSBIV.
- Branch lines from the above described main steam piping up to and including, the first valve, which includes MSSV.
- Inlet piping from the main steam line up to and including MSRVs and MSDVs.
- Branch lines from the main steam piping to the emergency feedwater pump turbines up to and excluding the first motor-operated valve.
- Main steam drain piping upstream of MSIV up to and including main steam drain line isolation valves (MSDIVs).
- Nitrogen supply line located on the main steam piping upstream of MSIV, up to and including the first isolation valve.

The following MSS components are classified as Equipment Class 3, and are safety-related and are designed in accordance with American Society of Mechanical Engineers (ASME) Boiler and Pressure Vessel Code Section III (Reference 10.3-6), Class 3, seismic category I:

- MSS piping downstream of MSIV and MSBIV up to and including the first restraint located in the main steam/feedwater piping area.

- MSSV, MSRV and MSDV discharge piping located in the main steam/feedwater piping area.
- Downstream piping of MSDIVs located in the main steam/feedwater piping area.

All remaining components located out of the reactor building are non safety-related, non Seismic and are designed in accordance with the Power Piping Code, ASME B31.1 (Reference 10.3-7).

The safety-related portion of the MSS is designed to withstand the effects of a safe-shutdown earthquake (SSE) and to perform its intended function following postulated events.

The safety-related portions of the MSS are designed to perform their required functions during normal conditions, adverse environmental occurrences and accident conditions including loss of offsite power with a single malfunction or failure of an active component.

The MSS is qualified to leak before break criteria as discussed in Section 3.6

The safety-related portion of the MSS is designed to withstand adverse dynamic loads, such as relief valve fluid discharge loads per SRP Section 3.9.3. The details of the design are described in Subsection 3.9.3.2.

The MSS complies with the containment isolation criteria described in Subsection 6.2.4.

The safety-related portions of the MSS are designed such that a single failure in the MSS does not result in:

- Loss of integrity of other steam lines
- Loss of capability of the engineered safety features system to effect a safe shutdown
- Transmission of excessive loading to the containment pressure boundary.

The MSS is designed to include the capability to operate the MSDVs remotely from the main control room following a SSE coincident with the loss of offsite power so that a cold shutdown can be achieved by depending only on safety-grade components, as described in Section 7.4.

The MSS section constructed in accordance with ASME Section III (Reference 10.3-6), Class 2 and 3 requirements provide access to welds and has removable insulation in areas that require inservice inspection in accordance with ASME Section XI (Reference 10.3-8).

ASME Code, Section III (Reference 10.3-6), Class 1, 2 and 3 components are required to perform a specific function in shutting down the reactor to a safe-shutdown condition, in maintaining the safe-shutdown condition, or in mitigating the consequence of an accident. These components are subjected to inservice testing (IST) to assess and verify

operational readiness as set forth in 10 CFR 50.55a(f) (Reference 10.3-9) and ASME OM Code (Reference 10.3-7).

The US-APWR utilizes ASME OM Code for developing the IST Program for ASME Code, Section III (Reference 10.3-6), Class 1, 2 and 3 safety-related pumps, valves and dynamic restraints. A description of these is presented in Subsection 3.9.6

10.3.1.2 Non Safety Power Generation Design Bases

The following is a list of the non safety power generation design bases:

- The MSS is designed to deliver steam from the SGs to the steam turbine generator for the range of flow rates, temperatures and pressures from warming of the main steam piping to rated power conditions.
- Each main steam line is sized to provide balanced steam pressures to the main turbine stop valves. The main steam equalization piping located midway between these lines is designed to equalize the pressure from individual main steam lines.
- The MSS is capable of accepting a ± 10% step load change and a ± 5%/min ramp load change without discharging steam to the condenser or the atmosphere. For large load change step reductions, steam is bypassed directly to the condenser via the turbine bypass system.
- The MSS together with the turbine bypass system is capable of accepting 100% load rejection without reactor trip and without lifting MSSVs and MSRVs.
- The MSS provides the capacity to dump 67.5% of rated power steam flow to the condenser resulting from 100% load reduction.
- The MSS provides the means of dissipating residual and sensible heat generated from the NSSS during hot standby and cooldown even when the main condenser is not available. MSDVs or MSRVs are provided to allow controlled cooldown of the steam generator and the reactor coolant system when the condenser is not available.
- The MSS provides the ability to dry and reheat the exhaust steam from the high-pressure turbine and delivers steam to the low-pressure turbine.
- The MSS design prevents water induction into the turbine during transient conditions. The MSS also provides turbine over speed protection during transient conditions by limiting stored energy in feedwater heaters.
- The MSS collects the drainage condensed in the main steam and reheat piping, and transports it to the condenser.

10.3.2 Description

10.3.2.1 General Description

The MSS is primarily a steam transport system consisting of piping and valves and associated instrumentation. MSS piping and components are located within the containment, in the main steam/feedwater piping area in the reactor building and the turbine building. The MSS piping and instrumentation diagrams are shown in Figures 10.3-1, 10.3-2, 10.3-3 and 10.3-4. Table 10.3.2-1 provides MSS performance data. The system includes the following major components:

- Main steam piping from the SG outlet steam nozzles to the main turbine stop valves
- MSIV and MSBIV in each main steam line
- Main steam check valve (MSCV) in each main steam line
- MSSVs, MSRV and MSDV in each main steam line
- Main steam relief valve block valve (MSRVBV) in each main steam line
- Main steam branch line from each main steam line to emergency feedwater pump turbine
- TBVs (see Subsection 10.4.4)

10.3.2.2 Main Steam System – Detailed Description

10.3.2.2.1 Main Steam Delivery

The MSS transports and distributes steam from the SG system to the main turbine system (MTS) during power generation and directly to the main condenser when the MTS is not available. The piping is designed such that the pressure drop from the SG to the turbine main steam stop valve does not exceed 41.3 psi at rated power steam flow conditions. The low-pressure drop assures the steam moisture content does not exceed 0.5%. Piping is sized for rated power steam flow conditions. Velocities are approximately 150 ft/sec. These are four, 32 inch diameter main steam lines, one from each SG supplies steam to the turbine generator. The 32 inch diameter main steam lines from the SGs are connected to the 42 inch equalization piping located near, but below, the high-pressure turbine. The portion of the steam from the equalization piping flows to gland steam seals, moisture separator reheater, deaerator heating with the high-pressure turbine receiving the balance of the flow via four individual lines and four main turbine stop and control valves. The main turbine stop valves and main turbine control valves are part of the MTS and are discussed in Section 10.2. Each of the main steam lines is anchored in the main steam/feedwater piping area adjacent to the turbine building.

The sizes and layout of the main steam piping from individual SGs hydraulically balances the pressure drop such that the differential pressure between any two SGs does not exceed 10 psi.

Main steam branching from the equalization piping supplies reheating steam to the MS/R 2nd stage tube bundle. Control valves in the reheating steam supply lines control the steam flow to the tube bundles during plant startup and shutdown. Power operated isolation valves and bypass valve are also located in the MS/R reheating steam supply lines.

Connections allowing sampling are provided in appropriate locations in the secondary side piping. The sampling system is described in Subsection 9.3.2

Branch connections are provided from the main steam lines to perform various functions. Upstream of MSIVs, connections are provided for emergency feedwater pump turbine feed, MSSVs, MSRVs, MSDVs, low point drains, high point vents and nitrogen blanketing. Branch piping downstream of MSIVs, includes connections for MS/R reheaters, gland seal system, pegging steam for dearating feedwater heater, ASSS, turbine bypass system and low point drains.

All four main steam lines are tapped to supply two emergency feedwater pump turbines. This assures steam supply under a postulated main steam line break accident.

A branch line from the equalization piping supplies pegging steam to the deaerator. Steam is supplied during the following conditions:

- Plant startup to preheat the feedwater flow
- Following a turbine trip or load rejection when main steam is used to maintain positive pressure in the deaerator.

The turbine glands receive sealing steam from the MSS via a branch line from the equalization piping. The branch line connects to the supply header from the ASSS. During startup the ASSS supplies steam to the turbine glands. Sealing steam is switched from the ASSS to the MSS after the main steam becomes available at the equalization piping. A power operated valve isolates MSS from the GSS and ASSS when main steam is not the source for the gland sealing steam.

Piping design data is provided in Tables 10.3.2-3 and 10.3.2-4

10.3.2.2.2 Main Steam Line Drains

The main steam piping layout provides for the collection and drainage of condensate to avoid water entrenchment. The lines are sloped in the direction of steam flow.

To minimize the possibility of water induction into the main turbine, drain traps are provided at low points in the main steam piping where water may collect. Condensate from these drains is piped to the main condenser.

Each drain trap arrangement consists of a float trap provided for continuous moisture removal and is piped in parallel with an automatic, power operated bypass valve. Automatic control is accomplished at the drain pot attached on the upstream of the trap

by a level control device, which opens or closes the valve. Water collected in the drain trap is continuously removed during normal plant power operations.

10.3.2.3 Component Description

10.3.2.3.1 Main Steam Piping

The main steam lines between the SGs and the containment penetration are designed to meet the leak before break criteria. The portion of the main steam lines between the containment penetration and the anchor downstream of the MSIV is part of the break exclusion zone. Section 3.6 addresses the applicability of leak before break and break exclusion zone to the main steam line. This piping is designed to Seismic Category I requirements.

Each SG outlet nozzle is equipped with a flow restrictor to limit the flow in the event of a steam line break. This flow restrictor is a multi-flow nozzle-type with a throat diameter of equivalent to16 inches.

Main steam piping is designed to minimize the effects of erosion/corrosion. Pipe material, pipe wall thickness, fluid velocity, fluid chemistry and piping arrangement affect erosion/corrosion damage.

The main steam piping to the turbine is sized to limit velocities to minimize potential erosion and routed to minimize bends/elbows. Selected pipe wall thickness includes corrosion allowance, accounting for the design life of the plant and pipe wall thickness inspections are performed to monitor wall erosion.

Design parameters for the main steam piping are provided in Table 10.3.2-1 and 10.3.2-3.

10.3.2.3.2 Main Steam Safety Valves

MSSVs with sufficient rated capacity are provided to prevent the steam pressure from exceeding 110 percent of the MSS design pressure:

The total required capacity of these valves is 105% of the main steam flow rate at rated power conditions.

MSSV rated capacity is tabulated in Table 10.3.2-2.

Six MSSVs are provided per main steam line. Table 10.3.2-2 provides performance data and set pressure for the MSSVs.

The MSSVs are located in the safety-related portion of the main steam piping upstream of the MSIVs and outside the containment in the main steam/feedwater piping area. Adequate space is provided for the installation and support of the valves. Static or dynamic loads when operating or when subject to seismic events are considered.

The piping and valve arrangement and design analysis is performed in accordance with the guidelines in ASME Section III, Non-mandatory Appendix O, “Rules for Design of Safety Valve Installations.” (Reference 10.3-10)

Each MSSV is connected to a vent stack. The stacks are arranged and designed to prevent steam backflow from the transition piece and to minimize the backpressure on the valve outlet.

The vent stacks are designed and supported to withstand SSE loads. This is to prevent the vent stacks from being damaged and jeopardizing the performance of safety-related components.

The vent stacks are arranged to:

- Direct the steam flow away from the adjoining structures
- Ensure that no backflow of steam occurs
- Minimize back pressure on the valve outlet to prevent jeopardizing valve rated capacity

10.3.2.3.3 Main Steam Relief Valves, Main Steam Depressurization Valves and Main Steam Relief Valve Block Valves

A. Main Steam Relief Valves

- One air-operated MSRV is installed on the MSS piping from each SG.
- MSRVs' primary function is to prevent an unnecessary lifting of the MSSVs. MSRVs automatically open, modulate and exhaust to the atmosphere whenever the steam line pressure exceeds a predetermined set point. Each valve is designed to trip open within three seconds. As the pressure decreases, the MSRVs modulate to close.
- No credit is taken for the MSRVs during safe-shutdown.
- The valve design data is provided in Table 10.3.2-2. The maximum capacity of the valve is limited to reduce the temperature magnitude of a reactor transient, should one valve inadvertently open and remain open.

B. Main Steam Depressurization Valve

- One motor-operated MSDV is installed on the main steam piping from each SG.
- MSDV provides controlled removal of reactor decay heat (in conjunction with the EFWS) during safe shutdown after a plant transient, accident condition, or emergency condition when the turbine bypass system is not available. The valve opening is regulated from the main control room to cool down the RCS within 6 hours after 8 hours hot standby condition.

- MSDVs perform safety function for plant safe shutdown, but are not used for normal plant shutdown.
- The valve design data is provided in Table 10.3.2-2. The maximum capacity of the valve is limited to reduce the magnitude of a transient, should one valve inadvertently open and remain open.

All MSRVs and MSDVs are located outside the containment in the main steam/feedwater piping area upstream of the MSIVs in the safety-related portion of the main steam line.

MSRVs and MSDVs are designed as safety-related ASME Code, Section III (Reference 10.3-6), Safety Class 2 and Seismic Category I.

C. Main Steam Relief Valve Block Valve

MSRVBVs with remote control are located upstream of each MSRVs and MSDVs facilitating isolation of leaking or stuck open MSRVs or MSDVs. MSRVBVs are closed manually from the main control room, and automatically close when steam line pressure reaches a predetermined set point.

10.3.2.3.4 Main Steam Isolation Valves and Main Steam Check Valves

The function of the MSIVs is to limit uncontrolled steam release from one SG in the event of a MSLB with a single active failure in order to:

- Limit the effect on the reactor core to within the specified fuel design limits.
- Limit containment pressure to a value less than the design pressure,

If the MSLB occurs upstream of MSIVs, the broken side SG is isolated by the MSIVs on the main steam piping of the intact SGs or the MSIV/MSCV of the broken line. In case of a line break downstream of the MSIV, MSIVs on the main steam piping of the both intact SGs and faulted SG would prevent the steam blowdown. See Table 10.3.3-1 which shows failure of either train solenoid valve for MSIV actuation does not impair isolation function of MSIV.

MSIV consist of system medium actuated gate valve which uses valve inside pressure to close in each main steam line with instrumentation. These valves are located outside the containment in the main steam/feedwater piping area. The MSIVs are designed to fully close within 5 seconds after the receipt of following signals:

- Low main steam line pressure
- High-high containment pressure
- High main steam line pressure negative rate
- Manual actuation

Valve design parameters are provided in Table 10.3.2-2

10.3.2.3.5 Main Steam Bypass Isolation Valves

MSBIVs are installed in parallel to the MSIVs. MSBIVs are used to warm up main steam lines prior to start up when MSIVs are closed. The valves also equalize the pressure on either side of the MSIV to enable opening of the MSIV. Bypass valves are air-operated globe valves and are closed during normal plant operation. The valves are designed to close within 5 seconds automatically by the same signals for MSIVs.

Valve design parameters are provided in Table 10.3.2-2

10.3.2.3.6 Main Steam to Emergency Feedwater Pump Turbine

See Subsection 10.4.9, Emergency Feedwater System.

10.3.2.4 System Operation

10.3.2.4.1 Normal Operation

During startup, the main steam piping is heated by opening the MSBIV and thus controlling the steam flow. Main steam is not admitted to the main turbine until warmup of the main steam piping is accomplished. After warmup mode, secondary side no-load temperature and pressure are maintained automatically by the turbine bypass system which is maintained in the pressure control mode. When the reactor coolant temperature reaches 557°F (which is the no load temperature), the MSIVs are opened in a controlled manner. As the piping downstream of MSIVs is heated up, MSIVs are fully open and the MSBIVs are closed.

The MS/R 2nd reheat supply steam shutoff valve, control valve, bypass valve and warmup valve remain closed below 10% turbine load. With turbine load greater than 10%, heating steam is admitted by opening the warmup valve to the tube bundle.

During hot standby condition, the SG pressure is controlled by modulating TBVs and dumping steam to the condenser.

During plant cool down, decay and sensible heats are removed by dumping steam into the condenser via the TBVs. When the steam pressure falls below 125 psia, the steam dump is then stopped and cooldown is switched to the residual heat removal operation.

10.3.2.4.2 Emergency Operation

In the event that the plant must be shutdown due to accident or transient, the MSIVs with associated MSBIVs are closed. The MSDVs are used to remove the reactor decay heat and primary system sensible heat in order to cooldown the primary system to the conditions at which the residual heat removal system can perform the remaining cooldown function. If one of the MSDVs is unavailable, the respective safety valves associated with that main steam line provide overpressure protection. The remaining MSDVs are sufficient to cooldown the plant.

In the event of a design-basis accident, such as a main steam line break, the MSIVs with associated MSBIVs are automatically closed. In case the line break is downstream of the MSIV, the MSIVs on the main steam piping of the both intact SGs and faulted SG would prevent the steam blowdown through more than one SG. If the MSLB occurs in the upstream of MSIVs, the broken side SG is isolated by the MSIVs on the main steam piping of the intact SGs or the MSIV/MSCV of the broken line.

10.3.2.4.3 Water (Steam) Hammer Prevention

The MSS design takes into consideration water (steam) hammer and relief valve discharge loads to assure that system safety functions can be performed. Refer to DCD subsection 3.12.5.3.5 Fluid Transient Loads for a description of water (steam) hammer caused by rapid valve closure and relief valve discharge loads in the piping analysis.

MSIV operation and drain pot operation considers steam line water entrainment effects. Before opening the MSIV during plant start up, main steam piping down stream of the MSIV is warmed gradually by opening the MSBIV, hence, water slug formation in the condensate is prevented. The automatic power operated valve attached parallel to the steam trap opens when the drain pot high level switch activates, and the high level alarm is annunciated to MCR to give warning to the operator.

The Combined License Applicant is to provide operating and maintenance procedures including adequate precautions to prevent water (steam) hammer, relief valve discharge loads and water entrainment effects in accordance with NUREG-0927 and a milestone schedule for implementation of the procedure. The procedures should address:

- Prevention of rapid valve motion
- Introduction of voids into water-filled lines and components
- Proper filling and venting of water-filled lines and components
- Introduction of steam or heated water that can flash into water-filled lines and components
- Introduction of water into steam-filled lines or components
- Proper warmup of steam-filled lines
- Proper drainage of steam-filled lines
- The effects of valve alignments on line conditions.

10.3.3 Safety Evaluation

- Each main steam line is provided with MSSVs and MSRVs to automatically remove stored energy and to limit the pressure in the line.

- Each line is provided with a MSDV for controlled removal of reactor decay heat (in conjunction with the EFWS) during safe shutdown after plant transient and accident conditions.
- Redundant power supplies are provided to operate MSIVs and MSBIVs for containment isolation.
- Branch lines located on the safety-related portion of the main steam lines contain normally closed valves or power operated valves which are closed remotely when required.
- Radioactive contamination of the MSS can occur by a primary side to secondary side leak in the SG. The main steam can become contaminated due to tritium diffusion through SG tubes even without primary-to-secondary leakage. A discussion of the radiological aspects of primary-to-secondary system leakage and conditions for operation is contained in Chapter 11. Additionally, the MSIVs provide controls for reducing releases by isolating the affected main steam line following a steam generator tube rupture (SGTR). In-line radiation monitors on each steam line, condenser vacuum pump exhaust line radiation monitor, GSS exhaust fan discharge line radiation monitor and the SG blowdown line radiation monitor facilitate leak detection.
- The safety-related portions of the MSS are located in the containment and the main steam/feedwater piping area of the reactor building. These buildings are designed to withstand the effects of earthquakes, tornadoes, hurricanes, floods, external missiles and other natural phenomena. Sections 3.3, 3.4, 3.5, 3.7 and 3.8 describe the bases of the structural design of these buildings.
- The safety-related portion of the MSS is designed to remain functional after a SSE.
- The MSS and components are initially tested with the program given in Chapter 14. Periodic in-service functional testing is done in accordance with Subsection 10.3.4. Section 6.6 ISI for Class 2 and 3 component lists appropriate ASME Section XI (Reference 10.3-8) requirements for the safety-related portion of the system.
- The safety-related components of the MSS are qualified to function in normal, test, and accident environmental conditions. The environmental qualification program is described in Section 3.11.
- Section 3.2 provides quality group classification, design and fabrication codes, and seismic category applicable to MSS.
- Failure mode and effects analysis Table 10.3.3-1 concludes that no single failure coincident with loss of offsite power compromises the system's safety functions. All vital power sources, onsite and offsite are described in Chapter 8
- The steam supply lines to the EFW pump turbine located upstream of the MSIV assure steam supply to these turbines.

- Check valves located in the steam supply lines to EFW pump from the main steam lines preclude potential backflow during a postulated main steam line break.
- High and moderate energy pipe break locations and leak before break application and evaluation effects are provided in Section 3.6.
- MSIV's containment isolation adequacy and the containment leakage testing are addressed in Subsections 6.2.4 and 6.2.6 respectively.
- Instrumentation and controls associated with the MSS are addressed in Chapter 7.

10.3.4 Inspection and Tests

10.3.4.1 Preoperational testing

10.3.4.1.1 Valve Testing and Inspection

The operability and setpoints of the MSSVs are verified at operating temperature using steam as the pressurization fluid. Testing at operating temperature reduces the likelihood of adjusting the setpoint during hot functional testing heatup. The valves may either be bench-tested or in-situ tested. The valves are adjusted as required to lift at their set pressure defined in Table 10.3.2-2.

The operability of each MSRV and MSDV is verified.

The MSIVs and MSBIVs are tested to check closing time prior to startup.

10.3.4.1.2 System Testing

The MSS is designed to allow system operation testing for both normal and emergency operating modes. This includes applicable protection system components.

The safety-related components of the system are designed and located to permit pre-service and in-service inspection.

10.3.4.1.3 Pipe Testing

The safety-related main steam lines within the containment and main steam/feedwater piping area are visually and volumetrically inspected at installation per ASME code Section XI (Reference 10.3-8) pre-service inspection requirements.

10.3.4.2 In-Service Testing

The structural leaktight integrity and performance of the system components is demonstrated by operation. A description of periodic in-service inspection and in-service testing of ASME Code, Section III, Class 2 and 3 components is provided in Section 6.6 and Subsection 3.9.6.

Pre-service and in-service testing and inspection are further described in Chapter 14.

10.3.5 Water Chemistry

The objectives of the secondary side water chemistry controls are as follows:

- Minimize general corrosion and flow accelerated corrosion (FAC) in the SGs, turbine, and feedwater system by maintaining pH control and by minimizing oxygen ingress coupled with oxygen scavenging.
- Minimize the localized corrosion in the SGs, turbine and feedwater system by minimizing chemical contaminants ingress and by controlling contaminant levels by polishing condensate and SG blowdown.

10.3.5.1 Chemistry Control Basis

The secondary side water chemistry control basis for the US-APWR is as follows:

A. System Design and Control Phase

- Secondary side materials are selected to minimize corrosive species such as copper oxides.
- Deaeration capability is incorporated in the demineralized water flow path, condenser hotwell and deaerator.
- Continuous blowdown capability incorporated for SG bulk water.
- Post-construction cleaning of the condensate and feedwater system (CFS) is followed by wet lay-up of the feedwater system (FWS) and the SGs.

B. Operation Phase

- Early identification of any contaminant ingress (corrosion products, oxygen, and salts).
- Capability to filter and demineralize condensate by passing through the condensate polishing system prior to and during startup, shutdown and operation at power with abnormal secondary cycle chemistry.
- Addition of chemicals to establish and maintain an environment that minimizes corrosion in the system.
- Operation of the SG blowdown system.
- Continuous monitoring, grab sample analysis and determination of action levels based on chemistry conditions.
- All volatile treatment (AVT) to minimize general corrosion. Injection of pH adjustment chemical and oxygen scavenger.

10.3.5.2 Contaminant Ingress

Contaminants may be introduced into the CFS water through three major sources: makeup water, condenser tube leaks, and atmospheric leaks at the condenser, pump seals or other components. The contaminant ingress is detected by following methods:

- Demineralized water (makeup water) is continuously monitored as it is produced in the water treatment plant.
- Ionic contaminants are detected by either continuous process monitoring or sample analysis of the condensate pump discharge, feedwater down stream of high pressure heater No. 7, moisture separator drains and steam generator bulk flow via blowdown water sample.
- Atmospheric contamination is detected by monitoring the quantity of dissolved oxygen in the condensate pump discharge and the condenser air removal rate.

10.3.5.3 Condensate Polishing

A condensate polishing system removes suspended corrosion products and ionic contaminants. The system is capable of handling the condensate design flow rate. This system is not normally used in all phases of plant operation.

The CFS recirculate water to the condenser prior to and during plant startup. The condensate polishing sysytem is used to remove corrosion products in this phase and thus prevent their ingress into the steam generators.

See Subsection 10.4.6 for a further description of condensate polishing.

10.3.5.4 Chemical Addition

US-APWR employs an all volatile treatment (AVT) method to minimize general corrosion in the FWS, SGs and main steam piping. A pH adjusting chemical and an oxygen scavenger are injected into the condensate water downstream of the condensate polisher.

To reduce the general corrosion and FAC rate of ferrous alloys, a volatile pH adjustment chemical is injected to maintain a non-corrosive environment. Feedwater pH of 9.2 or more provides sufficient iron reduction effect.

Hydrazine (or an equivalent oxygen scavenger) is added to scavenge the dissolved oxygen and reduce it within the specified limits in the feedwater for each mode of operation.

10.3.5.5 Action Levels for Abnormal Conditions

Appropriate responses to abnormal chemistry conditions provide for the long-term integrity of the secondary cycle components. Remedial actions are taken when chemistry parameters are outside normal operating ranges.

The COL applicant will provide secondary side water chemistry threshold values and recommended operator actions for chemistry excursions, or provide a commitment to the latest version of the EPRI “PWR Secondary Water Chemistry Guidelines” in effect at the time of COLA submittal.

10.3.5.6 Lay Up and Heatup

US-APWR anticipates no long-term SG layup under dry conditions. When inspection or maintenance is required on the secondary side, the SGs are drained hot water under a nitrogen atmosphere. After cooling, the nitrogen is purged and inspection/maintenance is performed.

Wet layup conditions are established for corrosion protection during outages.

The bulk water in the SGs is generally brought into power operation specifications before heatup to full power. This is done by either draining and refilling or feeding and bleeding.

10.3.5.7 Chemical Analysis Basis

Each chemical's impact is discussed below:

- Oxygen in the presence of moisture rapidly corrodes carbon steel. The resulting corrosion products may be carried through the FWS and form a sludge pile in the SGs. This sludge creates an ideal environment for localized corrosion on SG tubes. Thus the oxygen concentration should be kept as low as practical in the feedwater system. Dissolved oxygen is controlled at the condenser and deaerating feedwater heater to prevent oxygen transport in the FWS.
- The oxygen concentration is measured by process analyzers and by grab samples and is used as input for the oxygen scavenger injection.
- In the absence of significant impurities, the pH is controlled by the concentration of the volatile pH adjustment chemical and the oxygen scavenger. Maintaining pH within the recommended band results in minimal ferrous material corrosion rates. The pH is measured in both process and bench instruments.
- Cation conductivity is a measure of the presence of ionic contamination and provisions are made for monitoring conductivity in samples from the condensate, feedwater and the SG blowdown.
- Sodium is an effective indicator of many forms of contaminant ingress. Sodium is measured by process analyzers and is capable of tracing the chemical at sub ppb level. Increased sodium levels are indicative of condenser tube leakage or makeup water contamination.
- Chloride is aggressive to ferrous materials at steam generator operating conditions. It has also been identified to be relevant to inconel 600 pitting.
- Sulfate causes acidic environment of SG crevice pH.

10.3.5.8 Sampling

Samples are taken from the condenser hotwell, demineralized water, condensate, feedwater, emergency feedwater, SG blowdown, main steam, reheat steam and heater drains. Many samples are analyzed routinely, some only as required for troubleshooting and problem diagnosis. The sampling process are post-accident sampling system are further described in Subsection 9.3.2.

10.3.5.9 Condenser Inspection

The secondary side water chemistry program includes a comprehensive inspection program for the condenser to verify condenser integrity. The program includes a visual inspection of the condenser during outages, component inspection for air leaks, and a waterbox inspection for tube leaks during plant operation. These inspections will be performed as needed basis for troubleshooting and diagnosis.

10.3.5.10 Conformance with BTP MTEB 5-3

US-APWR conformance to Branch Technical Position MTEB 5-3 (Reference 10.3-11) is discussed in Section 1.9.

10.3.6 Steam and Feedwater System Materials

10.3.6.1 Fracture Toughness

The material specifications for pressure retaining components in the safety-related portion of the MSS and CFS meet the fracture toughness requirements of ASME Code, Section III, Articles NC-2300 (Class 2) (Reference 10.3-6) and ND-2300 (Class 3) (Reference 10.3-6) for Quality Group B and Quality Group C components.

10.3.6.2 Material Selection and Fabrication

All piping, flanges, fittings, valves and other piping component materials conform to the referenced ASME, ASTM, ANSI and/or Manufacturer Standardization Society-Standard Practice (MSS-SP) Code.

The following requirements apply to the non safety-related portion of the main steam and feedwater systems

Component	Alloy/Carbon Steel
Pipe	ASME B31.1
Fittings	ANSI B16.9
	ANSI B16.11
	ANSI B16.28
Flanges	ANSI B16.5

Material specifications for the MSS and CFS piping and components are listed in Tables 10.3.2-3 and 10.3.2-4.

Nondestructive inspection of ASME Code Section III (Reference 10.3-6), Class 2 and 3 components is addressed in Section 6.6.

The material selection and fabrication methods used for Class 2 and 3 components conform to the following:

- In designing US-APWR, the material used for the piping and components of the CFS and the MSS conform with Appendix I to Section III (Reference 10.3-12), Parts A (Reference 10.3-13), Parts B (Reference 10.3-14), and Parts C (Reference 10.3-15) of Section II of the ASME Code Regulatory Guide 1.84 (Reference 10.3-16).
- Cleaning and handling of Class 2 and Class 3 components of the MSS and CFS are conducted in accordance with the acceptable procedures described in RG 1.37.
- The welding of low-alloy materials conform to the guidance provided in Regulatory Guide 1.50, “Control of Preheat Temperature for Welding of Low-Alloy Steel” (Reference 10.3-19) for the MSS and the CFS. The minimum preheat temperatures for carbon steel and low alloy materials conform to the recommendations in ASME Section III, Appendix D, Article D-1000 (Reference 10.3-6).
- As for welds in areas of limited accessibility, the qualification procedure is specified in conformances with the guidance of Regulatory Guide 1.71 (Reference 10.3-20) (i.e., assurance of the integrity of welds in locations of restricted direct physical and visual accessibility) and as described with respect to all applicable components.
- The nondestructive examination procedures and acceptance criteria used for the examination of tubular products conform to the provisions of the ASME Code, Section III, Paragraphs NC/ND-2550 through 2570 (Reference 10.3-6). Refer to Section 6.6 for details on equipment class 2 and 3 components.

10.3.6.3 Flow-Accelerated Corrosion (FAC)

As noted in Subsection 10.3.6.2, MSS and CFS piping materials selected are corrosion resistant. CFS chemistry is controlled to have an environment that minimizes corrosion. This is further described in Subsection 10.3.5.

The following piping portions with potential for FAC are basically based on NUREG-1344 attached to GL 89-08. Generally, most of these piping portions are entirely made of carbon steel, however, materials for the piping portions extremely susceptible to FAC are FAC-resistant alloy (Cr-Mo steel, austenite stainless steel) taking into consideration past experiences. For other safety/non-safety carbon pipelines with relatively-mild FAC degradation identified in NUREG-1344 attached to GL 89-08, the initial thinning rate is prepared based on the actual measurement records from Japanese PWR nuclear power

plants. Setting the initial thinning rate due to FAC is 0.2×10^{-4} mm/hr and also estimating operational rates, the additional thickness 70 mils is applied for the 10-year of design life.

Single-Phase Line

- Main feedwater line
  The piping from steam generator up to and excluding main feedwater equalization piping upstream of feedwater flow meter is made of high content of chrome-moly materials as shown in table 10.3.2-3. This portion is resistant to FAC. Other feedwater lines upstream of feedwater equalization piping are generally made of carbon steel with 10 year corrosion margin, however, material of extremely susceptible to FAC portion such as feedwater heater and elbows are made of FAC resistant alloy.

- Steam generator blowdown line (upstream of angle valves)
  This portion is made of carbon steel with 10 year corrosion margin.

- Main feedwater recirculation to condenser
  Most of this entire portion is made of carbon steel with 10 year corrosion margin, however, material of extremely susceptible to FAC portion such as condenser and elbows are changed to FAC-resistant alloy

- Feedwater pump suction line
  Most of this entire portion is made of carbon steel with 10 year corrosion margin, however, material of extremely susceptible to FAC portion such as elbows are made of FAC-resistant alloy.

- Feedwater pump discharge line
  Most of this entire portion is made of carbon steel with 10 year corrosion margin, however, material of extremely susceptible to FAC portion such as feedwater pump discharge, feedwater pump minimum flow line and elbows are changed to FAC-resistant alloy.

- Condensate pump recirculation to condenser line
  Most of this entire portion is made of carbon steel with 10 year corrosion margin, however, material of extremely susceptible to FAC portion such as elbows are made of FAC-resistant alloy.

Two-Phase Line

- Main steam line
  This portion is made of carbon steel. There is no portion which is susceptible to FAC because of the low moisture of approximately 0.1 %.

- Turbine cross-over piping
  Most of this entire portion is made of carbon steel with 10 year corrosion margin.

- Turbine cross-under piping
  This portion is made of FAC-resistant alloy as shown in table 10.3.2-4. This portion is immune to FAC.

- Extraction steam line
  This portion is made of FAC-resistant alloy. This portion is immune to FAC.

- Feedwater heater drain piping
  Most of this entire portion is made of carbon steel with 10 year corrosion margin, however, material extremely susceptible to FAC such as downstream of control valves is made of FAC-resistant alloy.

- Steam generator blowdown line (downstream of angle valves)
  This portion is made of stainless steal or chrome-moly materials.

As for the safety/non-safety carbon pipelines with relatively-mild FAC degradation, the required design wall thickness is determined based on piping design pressure/ temperature and allowable stress in accordance with ASME Sec.III NX-3641 or ASME B31.1 paragraph 104. The specified wall thickness (prior to fabrication) is a standardized wall thickness stipulated in ASME B36.10M and ASME B36.19M. It is specified to exceed the required design wall thickness with consideration of minus tolerances of the thicknesses by a large and appropriate amount to account for the expected wall thinning during fabrication and FAC aging degradation of 70 mils. As for the safety/non-safety carbon pipelines with relatively-mild FAC degradation, the FAC monitoring program based on EPRI “Recommendations for an effective Flow-Accelerated Corrosion Program(NSAC-202L-R2)” will be prepared and implemented by using knowledge acquired from experiences of pipe wall thinning managements via Electric Power Companies in USA and Japan.The FAC monitoring program will include preservice thickness measurements of as-built piping considered susceptible to FAC. By performing this preservice measurement, the piping thickness margin that will be used as a wall thinning margin will be known, and then by combining the measurement with regular inspections, the frequency of the pipe replacement will be predicted. Integrity and safety of a plant is assured by conducting inspection and maintenance during the service life of the plant and replacing piping if necessary.

The US-APWR design and piping layout has considered several features for the various piping systems to minimize incidence of FAC in piping. These features include:

- elimination of high turbulence points wherever possible (example: adequate straight pipe length downstream of flow orifice or control valve, etc)

- use of long radius elbows

- smooth transition at shop or field welds

- selection of pipe diameter to have velocities within industry recommended values

- use of corrosion resistant materials

- use of austenite stainless steel and P11 and P22 chrome-moly materials

The type of fluid, flow rates, fluid temperatures and pressure of ASME Code Class 2 and 3 piping for steam and feedwater system are shown in Table 10.3.2-6.

The Combined License Applicant will provide a description of the FAC monitoring program for carbon steel portions of the steam and power conversion systems that contain water or wet steam and are susceptible to erosion-corrosion damage. The description will address consistency with Generic Letter 89-08 and NSAC-202L-R2 and will provide a milestone schedule for implementation of the program.

10.3.7 Combined License Information

COL 10.3(1) FAC monitoring program
The Combined License Applicant will provide a description of the FAC monitoring program for carbon steel portions of the steam and power conversion systems that contain water or wet steam and are susceptible to erosion-corrosion damage. The description will address consistency with Generic Letter 89-08 and NSAC-202L-R2 and will provide a milestone schedule for implementation of the program.

COL 10.3(2) Deleted

COL 10.3(3) Operating and maintenance procedures for water hammer prevention
The Combined License Applicant is to provide operating and maintenance procedures including adequate precautions to prevent water (steam) hammer, relief valve discharge loads and water entrainment effects in accordance with NUREG-0927 and a milestone schedule for implementation of the procedure.

10.3.8 References

10.3-1 General Design Criteria for Nuclear Power Plants, NRC Regulations Title 10, Code of Federal Regulations, 10 CFR Part 50, Appendix A.

10.3-2 Station Blackout, Regulatory Guide 1.155 Rev.0, August 1988.

10.3-3 Loss of all alternating current power, NRC Regulations Title 10, Code of Federal Regulations, 10 CFR Part 50.63.

10.3-4 Protection Against Low-Trajectory Turbine Missiles, Regulatory Guide 1.115 Rev.1, July 1977.

10.3-5 Tornado Design Classification, Regulatory Guide 1.117 Rev.1, April 1978.

10.3-6 Rules for Construction of Nuclear Facility Components, ASME Boiler and Pressure Vessel Code. Division 1, Section III, 2001 Edition with 2003 Addenda.

10.3-7 Power Piping, ASME B31.1.

10.3-8 Rules for Inservice Inspection of Nuclear Power Plant Components, ASME Boiler and Pressure Vessel Code, Section XI, Division 1.

10.3-9 Codes and standards, NRC Regulations Title 10, Code of Federal Regulations, 10 CFR Part 50.55a.

10.3-10 Rules for Design of Safety Valve Installations, ASME Boiler and Pressure Vessel Code Division 1, Section III, Non-mandtory Appendix O.

10.3-11 U.S. Nuclear Regulatory Commission, Monitoring of Secondary Side Water Chemistry in PWR. Steam Generators, NUREG-0800 Branch Technical Position MTEB 5-3.

10.3-12 Design Fatigue Curves, ASME Boiler and Pressure Vessel Code Division I, Section III, MANDATORY APPENDIX I.

10.3-13 MATERIALS PART A Ferrous Material Specifications, ASME Boiler and Pressure Vessel Code, Section II, 2007.

10.3-14 MATERIALS PART B Nonferrous Material Specifications, ASME Boiler and Pressure Vessel Code, Section II, 2007.

10.3-15 MATERIALS PART C Specifications for Welding Rods, Electrodes, and Filter Metals, ASME Boiler and Pressure Vessel Code, Section II, 2007.

10.3-16 DESIGN AND FABRICATION CODE CASE ACCEPTABILITY ASME SECTION III DIVISION 1, Regulatory Guide 1.84 Rev.26, July 1989.

10.3-17 Deleted

10.3-18 CONTROL OF THE USE OF SENSITIZED STAINLESS STEEL, Regulatory Guide 1.44 Rev.0, May 1973.

10.3-19 CONTROL OF PREHEAT TEMPERATURE FOR WELDING OF LOW-ALLOY STEEL, Regulatory Guide 1.50 Rev.0, May 1973.

10.3-20 WELDER QUALIFICATION FOR AREAS OF LIMITED ACCESSIBILITY, Regulatory Guide 1.71 Rev.1, March 2007.

10.3-21 S.Tsujikawa and S.Yashima, Results of Steam Generator reliability test, Proceeding of a Conference on Steam Generators and Heat Exchanger, Toronto, June 1994, Vol2, p6.73, CWS, 1994.

Table 10.3.2-1 Main Steam Supply System Design Data

Maximum calculated steam flow

Per steam generator	5,050,000 lb/hr
Total	20,200,000 lb/hr

Operating conditions

Rated power, pressure, (psia)	972
Rated power, temperature, (°F)	541.2
No load (hot standby) pressure, (psia)	1,107
No load (hot standby) temperature, (°F)	557
Allowable pressure drop from steam generator to turbine stop at full plant load, (psi)	41.3

Design conditions

Design pressure, (psig)	1,185
Design temperature, (°F)	568

For Main steam piping

Tables 10.3.2-3 and 10.3.2-4

Table 10.3.2-2 Main Steam System Valves (Sheet 1 of 3)

Main Steam Safety Valve

Number of valves per main steam line	6
Total number of valves	24
Relieving capacity per valve	884,000 (lb/hr) at design pressure
Relieving capacity per main steam line	5,304,000 (lb/hr) at design pressure
Total relieving capacity	21,216,000 (lb/hr) at design pressure
Valve type	Spring type
Valve size	6 (in)
Design pressure	1,185 (psig)
Design temperature	568 (°F)
Design code	ASME Section III, Class 2
	Seismic category I

Valve number	Set pressure (psig)	Relieving capacity (lb/hr)
MSS- SRV-509 (A,B,C,D)	1,185	884,000
MSS-SRV-510 (A,B,C,D)	1,215	906,000
MSS-SRV-511 (A,B,C,D)	1,244	928,000
MSS-SRV-512 (A,B,C,D)	1,244	928,000
MSS-SRV-513 (A,B,C,D)	1,244	928,000
MSS-SRV-514 (A,B,C,D)	1,244	928,000

Main Steam Relief Valve

Number per main steam line	1
Total number of valves	4
Valve size	6 (in)
Design capacity per valve	531,000 (lb/hr) at 1,150 (psig)
Total	2,121,000 (lb/hr) at 1,150 (psig)
Design pressure	1,185 (psig)
Design temperature	568 (°F)
Design code	ASME Section III, Class 2 Seismic category I
Actuator	Air-operated, modulating

Table 10.3.2-2 Main Steam System Valves (Sheet 2 of 3)

Main steam depressurization valve

Number per main steam line	1
Total number of valves	4
Valve size	6 (in)
Design capacity per valve	9.57×10^4 (lb/hr) at 125 (psia)
Total	38.3×10^4 (lb/hr) at 125 (psia)
Design pressure	1,185 (psig)
Design temperature	568 (°F)
Design code	ASME Section III, Class 2 Seismic Category I
Actuator	Motor-operated, modulating

Main Steam Relief Valve Block Valve

Number per main steam line	1
Total number of valves	4
Valve size	6 (in)
Design pressure	1,185 (psig)
Design temperature	568 (°F)
Design code	ASME Section III, Class 2 Seismic Category I
Actuator	Motor-operated

Main Steam Isolation Valves

Number per main steam line	1
Total number of valves	4
Valve size	32 (in)
Design pressure	1,185 (psig)
Design temperature	568 (°F)
Design code	ASME Section III, Class 2 Seismic Category I
Actuator	System medium actuated (using valve inside pressure)

Table 10.3.2-2 Main Steam System Valves (Sheet 3 of 3)

Main Steam Check Valves

Number per main steam line	1
Total number of valves	4
Valve size	32 (in)
Design pressure,	1,185 (psig)
Design temperature	568 (°F)
Design code	ASME Section III, Class 3 Seismic Category I
Actuator	-

Main steam bypass isolation valves

Number per main steam line	1
Total number of valves	4
Valve size	4 (in)
Design pressure	1,185 (psig)
Design temperature	568 (°F)
Design code	ASME Section III, Class 2 Seismic Category I
Actuator	Air-operated, modulating

Table 10.3.2-3 Main Steam and Feedwater Piping Design Data (Sheet 1 of 2)

Main Steam Piping

Segment	Material specification	Nominal OD	ASME Class
SG outlet to containment penetration	SA-333, Grade 6 (Seamless)	32 inch	Section III, Class 2
Containment penetration to MSIV	SA-333, Grade 6 (Seamless)	32 inch	Section III, Class 2
MSIV to main steam/feedwater piping area wall	SA-333, Grade 6 (Seamless)	32 inch	Section III, Class 3
Fittings	SA-181, Gr. 70 or SA-333, Grade 6 (Seamless)	32 inch	Note: Material Spec. for fittings and valves is same between ASME Section III Class 2 and 3.
Valves (Globe, Gate, Check)	SA-352, Grade LCB		
Main steam steam/feedwater piping area wall to equalization piping	ASTM A-672 Grade B60	32 inch	B31.1
Equalization piping	ASTM A-672 Grade B60	28 inch & 42 inch	
Lines to TSV	ASTM A-672 Grade B60	32 inch & 30 inch	
Fittings	ASTM A-105, A-672 Grade B60	28 inch, 32 inch, 42 inch	
Flanges	ASTM A-105		
Valves (Globe, Gate, Check)	ASTM A-181 Grade 70 or ASTM A-216 Grade WCB, Class 900		

Table 10.3.2-3 Main Steam and Feedwater Piping Design Data (Sheet 2 of 2)

Feedwater Piping

Segment	Material specification	Nominal OD	ASME Class
Feedwater pump outlet to feedwater pump discharge equalization piping	ASTM A-672 Grade B60	22 inch	B31.1
Feedwater pump discharge equalization piping	ASTM A-672 Grade B60	36 inch	
Feedwater pump discharge equalization piping to feedwater heaters 6/7	ASTM A-672 Grade B60	26 inch	
Feedwater heaters 6/7 outlet to feedwater heater 7 discharge equalization piping	ASTM A-672 Grade B60	26 inch	
Feedwater heater 7 discharge equalization piping	ASTM A-672 Grade B60	36 inch	
Fittings	ASTM A-105	22 inch, 26 inch & 36 inch	
Flanges	ASTM A-105		
Valves (Globe, Gate, Check)	ASTM A-181 Grade 70, or ASTM A-216 Grade WCB, Class 900		
Feedwater heater 7 discharge equalization piping to main/steam feedwater piping area wall	A-335 Grade P22 (Seamless)	18 inch	B31.1
Fittings	ASTM A-182 Grade F22, ASTM A-336 Grade F22 or ASTM A-335 Grade P22	18 inch	
Flanges	ASTM A-182 Grade F22		
Valves (Globe, Gate, Check)	ASTM A-182 Grade F22, or ASTM A-217 Grade WC9		
Main/steam feedwater piping area wall to MFIV	SA-335 Grade P22 (Seamless)	18 inch	Section III, Class 3
MFIV to SG	SA-335 Grade P22 (Seamless)	16 inch	Section III, Class 2
Fittings	SA-182 Grade F22 or SA-336 Grade F22 or SA-335 Grade P22	16 inch & 18 inch	Note: Material Spec. for fittings, flanges and valves is same between ASME Section III Class 2 and 3.
Flanges	ASTM A-182 Grade F22		
Valves (Globe, Gate, Check)	SA-182 Grade F22 or SA-217 Grade WC9		

Table 10.3.2-4 Main Steam Branch Piping Design Data (2.5-INCH AND LARGER)

Segment	Material specification	Nominal OD	ASME Class
Main steam piping to MSRV/MSDV	SA-333 Grade 6 (Seamless)	6 inch	Section III, Class 2
MSRV/MSDV discharge piping to main steam/feedwater piping area wall	SA-106 Grade A	6 inch & 12 inch	Section III, Class 3
Main steam piping to MSSV	SA-333 Grade 6 (Seamless)	6 inch	Section III, Class 2
MSSV discharge piping to main steam/feedwater piping area wall	SA-106 Grade A (Welded)	12 inch 16 inch	Section III, Class 3
Main steam piping to turbine-driven EFW pump turbine steam isolation valve	SA-333 Grade 6 (Seamless)	6 inch	Section III, Class 2
EFW pump turbine steam isolation valve to turbine-driven EFW pump steam turbine	SA-333 Grade 6 (Seamless)	6 inch	Section III, Class 3
Fittings	SA-105 or SA-333 Grade 6	6 inch 12 inch 16 inch	Note: Material Spec. for fittings, flanges and valves is same between ASME Section III Class 2 and 3.
Flanges	SA-105		
Valves (Globe, Gate, Check)	SA-216 Grade WCB, Class 900 or SA-181 Grade 70		
MSRV/MSDV discharge piping outside main steam/feedwater piping area	A-106 Grade A	12 inch	B31.1
MSSV discharge piping outside main steam/ feedwater piping area	A-106 Grade A	16 inch	
Fittings	ASTM A-105 or A-106 Grade A	12 inch 16 inch	
Flanges	ASTM A-105 (or equal), Class 150		
Valves (Globe, Gate, Check)	ASTM A-105, ASTM A-216, Grade WCB (or equal), Class 150		
Reheating steam to moisture separator reheater	ASTM A-691 Grade 2 1/4 CR	46 inch	B31.1
Fittings	ASTM A-387 Grade 22		
Flanges	ASTM A-182 F22		
Valves (Globe, Gate, Check)	ASTM A-182 F22 or ASTM A-217 Grade WC9, Class 900		
Moisture separator reheater steam to LP turbine	ASTM A-672 Grade. B65	46 inch	B31.1
Fittings	ASTM A-105		
Flanges	ASTM A-181 Grade 70 or A-216 Grade WCB, Class 900		
Valves (Globe, Gate, Check)	A-216 Grade WCB, Class 900		

Table 10.3.2-5 ASME Material Specifications with Filler Metal Specifications and Classification for each Welding Process

ASME Material Specification	Mat'l P #	Mat'l Group #	Tensile Strength (ksi)	Filler Metal (Note 7)							
				GTAW/GMAW (Note 1)		SMAW (Note 2)		FCAW (Note 3)		SAW (Note 4)	
				ASME Specification	Classification	ASME Specification	Classification	ASME Specification	Classification	ASME Specification	Classification
SA-333 Grade 6	1	1	60	SFA-5.18	ER70S-2	SFA-5.1	E7018	SFA-5.20	E71T-1	SFA-5.17	F7A2-EM12K
SA-672 Grade B60	1	1	60	SFA-5.18	ER70S-2	SFA-5.1	E7018	SFA-5.20	E71T-1	SFA-5.17	F7A2-EM12K
SA-335 Grade P22	5A	1	60	SFA-5.28	ER90S-B3	SFA-5.5	E9018-B3	SFA-5.29	E91T1-B3M	SFA-5.23	F9A2-EB3-B3
SA-182 F22	5A	1	Note 5	SFA-5.28	ER90S-B3	SFA-5.5	E9018-B3	SFA-5.29	E91T1-B3M	SFA-5.23	F9A2-EB3-B3
SA-217 Grade WC9	5A	1	70	SFA-5.28	ER90S-B3	SFA-5.5	E9018-B3	SFA-5.29	E91T1-B3M	SFA-5.23	F9A2-EB3-B3
SA-508 Grade 1	1	2	70	SFA-5.18	ER70S-2	SFA-5.1	E7018	SFA-5.20	E71T-1	SFA-5.17	F7A2-EM12K
SA-352 Grade LCB	1	1	65	SFA-5.18	ER70S-2	SFA-5.1	E7018	SFA-5.20	E71T-1	SFA-5.17	F7A2-EM12K
SA-106 Grade B	1	1	60	SFA-5.18	ER70S-2	SFA-5.1	E7018	SFA-5.20	E71T-1	SFA-5.17	F7A2-EM12K
SA-106 Grade A	1	1	48	SFA-5.18	ER70S-2	SFA-5.1	E7018	SFA-5.20	E71T-1	SFA-5.17	F7A2-EM12K
SA-387 Grade 22	5A	1	Note 6	SFA-5.28	ER90S-B3	SFA-5.5	E9018-B3	SFA-5.29	E91T1-B3M	SFA-5.23	F9A2-EB3-B3
SA-672 Grade C60	1	1	60	SFA-5.18	ER70S-2	SFA-5.1	E7018	SFA-5.20	E71T-1	SFA-5.17	F7A2-EM12K
SA-105	1	2	70	SFA-5.18	ER70S-2	SFA-5.1	E7018	SFA-5.20	E71T-1	SFA-5.17	F7A2-EM12K
SA-216 Grade WCB	1	2	70	SFA-5.18	ER70S-2	SFA-5.1	E7018	SFA-5.20	E71T-1	SFA-5.17	F7A2-EM12K
SA-266 Grade 2	1	2	70	SFA-5.18	ER70S-2	SFA-5.1	E7018	SFA-5.20	E71T-1	SFA-5.17	F7A2-EM12K

Notes:

1. GTAW – Gas Tungsten Arc Welding process /GMAW – Gas Metal Arc Welding process

2. SMAW – Shielded Metal Arc Welding process

3. FCAW – Flux Cored Arc Welding process

4. SAW – Submerged Arc Welding process

5. Class 1 has a tensile strength of 60 ksi and Class 3 has a tensile strength of 75 ksi.

6. Class 1 has a tensile strength of 60 ksi and Class 2 has a tensile strength of 75 ksi.

7. The filler metal specifications and classifications shown assume the base metal is being joined to itself.

8. The letter “M” after B3 may also be a “C” depending on which shielding gas is specified on the WPS.

9. Depending on the thickness of base material being welded, the “A” in the filler metal classification may also be a “P”.

Table 10.3.2-6 Main Steam and Feedwater Piping Fluid Data

Segment	Fluid	Flow rate	Temperature	Pressure
Main steam piping (32 inch piping, ASME Class 2 or 3)	Steam (Two-phase with 0.1 % moisture)	5,050,000 lb/hr	541.2 degF	972 psia
Feedwater piping (18 inch or 16 inch piping, ASME Class 2 or 3)	Water (Single-phase)	5,050,000 lb/hr	456.7 degF	972 psia
Steam generator blowdown piping (4 inch or 3 inch piping, ASME Class 2 or 3)	Water (Single-phase)	50,500 lb/hr	456.7 degF	972 psia

Table 10.3.3-1 Main Steam Supply System Failure Modes and Effects Analysis (Sheet 1 of 3)

Item	Description of component	Active Safety function	Plant operating mode	Failure mode(s)	Method of failure detection	Failure effect on system safety function capability
1	Main Steam Isolation Valve (MSIV) MSS-SMV-515A,B,C,D Normally open, fail closed system medium actuated valve	Isolates each main steam line. Isolates containment.	During power operation	Fails closed or fails to open on demand	Valve position Indication on the main control room	No safety-related impact on plant. Plant goes to safe shutdown condition.
			Steam System Piping Failure Steam Generator Tube Rupture Loss of Coolant Accident Safe shutdown	Solenoid valve for actuating the MSIV fails to open on demand	Valve testing is done in accordance with the Inservice Testing Program. If there are any problems with the solenoid valve, the failure is detected during the testing.	No safety-related impact on plant. MSIV is actuated by a separate train of solenoid valves with redundancy and different class 1E power bus. Failure of either train of solenoid valves does not impair isolation function of MSIV.
2	Main Steam Depressurization Valve (MSDV) MSS-MOV-508A,B,C,D Normally closed, fail as is motor-operated valve	Provide for controlled removal of reactor decay heat (in conjunction with the EFWS).	During power operation	Fails open or fails to close on demand	Valve position indication on the main control room	No safety-related impact on plant. Analysis shows no adverse effect assuming larger steam discharge rate than design rate of the valve.
			Steam Generator Tube Rupture A. Safe shutdown	Fails to open on demand	Valve position indication on the main control room	No safety-related impact on plant. Valves on intact SG steam lines provide RCS cooling and plant shutdown.
3	Main Steam Relief Valve (MSRV) MSS-PCV-515,525,535, 545 Normally closed, fail closed air-operated valve	-	B. During power operation	Fails open or fails to close on demand	Valve position indication on the main control room	No safety-related impact on plant. Analysis shows no adverse effect assuming larger steam discharge rate than design rate of the valve.
4	Main Steam Bypass Isolation Valve (MSBIV) MSS-HCV-565, 575, 585, 595 Normally closed, fail closed air-operated valve	Isolates containment	Loss of Coolant Accident	Fails to close on demand	Valve position indication on the main control room	No safety-related impact on plant. Containment boundary remains intact with redundancy provided by this valve, SGs and main steam lines.

Table 10.3.3-1 Main Steam Supply System Failure Modes and Effects Analysis (Sheet 2 of 3)

Item	Description of component	Active Safety function	Plant operating mode	Failure mode(s)	Method of failure detection	Failure effect on system safety function capability
5	Main Steam Safety Valve (MSSVs) MSS- SRV-509A,B,C,D MSS-SRV-510A,B,C,D MSS-SRV-511A,B,C,D MSS-SRV-512A,B,C,D MSS-SRV-513A,B,C,D MSS-SRV-514A,B,C,D Normally closed	Protect each SG from over pressurization	During power operation	Spurious opening or failure to reset after opening	Valve position indication on the main control room	No safety-related impact on plant. Analysis shows no adverse effect assuming larger steam discharge rate than design flow rate of the valve.
6	Main Steam Relief Valve Block Valve (MSRVBV) MSS-MOV-507A,B,C,D Normally opened, fail as is motor-operated valve	Isolates containment.	Loss of Coolant Accident	Fails to close on demand	Valve position indication on the main control room	No safety-related impact on plant. Containment boundary remains intact with redundancy provided by this valve, SGs and main steam lines.
7	Main Steam Drain Line Isolation valve (MSDIV) MSS-MOV-701A,B,C,D Normally opened, fail as is motor-operated valve.	Isolates containment.	Loss of Coolant Accident	Fails to close on demand	Valve position indication on the main control room	No safety-related impact on plant. Containment boundary remains intact with redundancy provided by this valve, SGs and main steam lines.
8	Steam Generator Blowdown CV Isolation valve SGS-AOV-001A,B,C,D Normally opened, fail closed air-operated valve.	Isolates SG blowdown. Isolates containment.	Loss of Non-emergency AC Power Loss of Nominal Feedwater Feedwater System Pipe Break Steam Generator Tube Rupture Safe shutdown	Fails to close on demand	Valve position indication on the main control room	No safety-related impact on plant. Isolation is achieved by redundant steam generator blowdown isolation valve (SGS-AOV-002A,B,C,D).
			Loss of Coolant Accident	Fails to close on demand	Valve position indication on the main control room	No safety-related impact on plant. Containment boundary remains intact with redundancy provided by this valve, SGs and main steam lines.

Table 10.3.3-1 Main Steam Supply System Failure Modes and Effects Analysis (Sheet 3 of 3)

Item	Description of component	Active Safety function	Plant operating mode	Failure mode(s)	Method of failure detection	Failure effect on system safety function capability
9	Steam Generator Blowdown Isolation Valve SGS-AOV-002A,B,C,D Normally opened, fail closed air-operated valve.	Isolates SG blowdown.	Loss of Non-emergency AC Power Loss of Nominal Feedwater Feedwater System Pipe Break Steam Generator Tube Rupture Safe shutdown	Fails to close on demand	Valve position indication on the main control room	No safety-related impact on plant. Isolation is achieved by redundant steam generator blowdown CV isolation valve (SGS-AOV-001A,B,C,D).
10	Steam Generator Blowdown Sample Isolation Valve SGS-AOV-031A,B,C,D Normally opened, fail closed air-operated valve.	Isolates SG blowdown. Isolates containment.	Loss of Non-emergency AC Power Loss of Nominal Feedwater Feedwater System Pipe Break Steam Generator Tube Rupture Safe shutdown	Fails to close on demand	Valve position indication on the main control room	No safety-related impact on plant. The size of SG blowdown sample line is very small that no safety-related impact on plat.
			Loss of Coolant Accident	Fails to close on demand	Valve position indication on the main control room	No safety-related impact on plant. Containment boundary remains intact with redundancy provided by this valve, SGs and main steam lines.

Table 10.3.5-1 Deleted

Table 10.3.5-2 Deleted

Table 10.3.5-3 Deleted

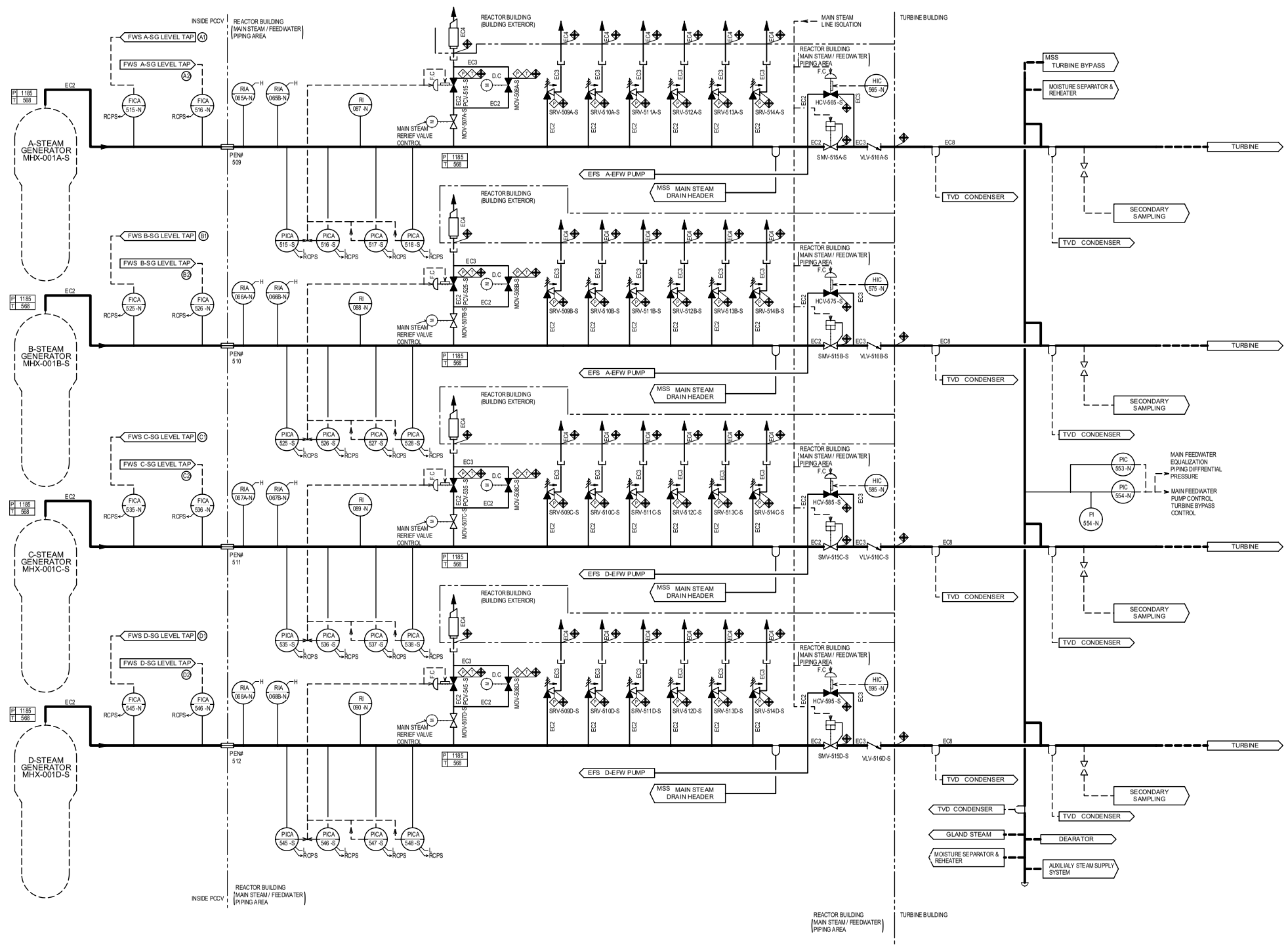

Figure 10.3-1 Main Steam Supply System Piping and Instrumentation Diagram (1/4)

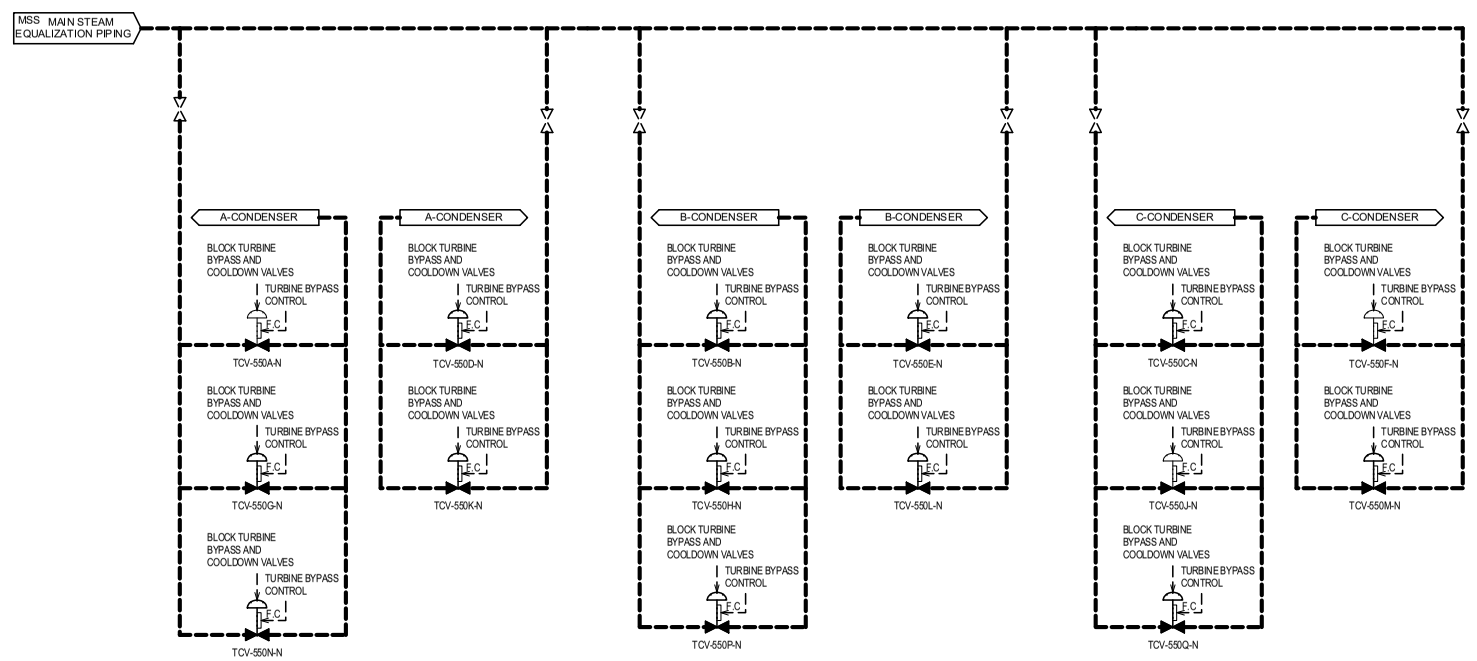

Figure 10.3-2 Main Steam Supply System Piping and Instrumentation Diagram (2/4)

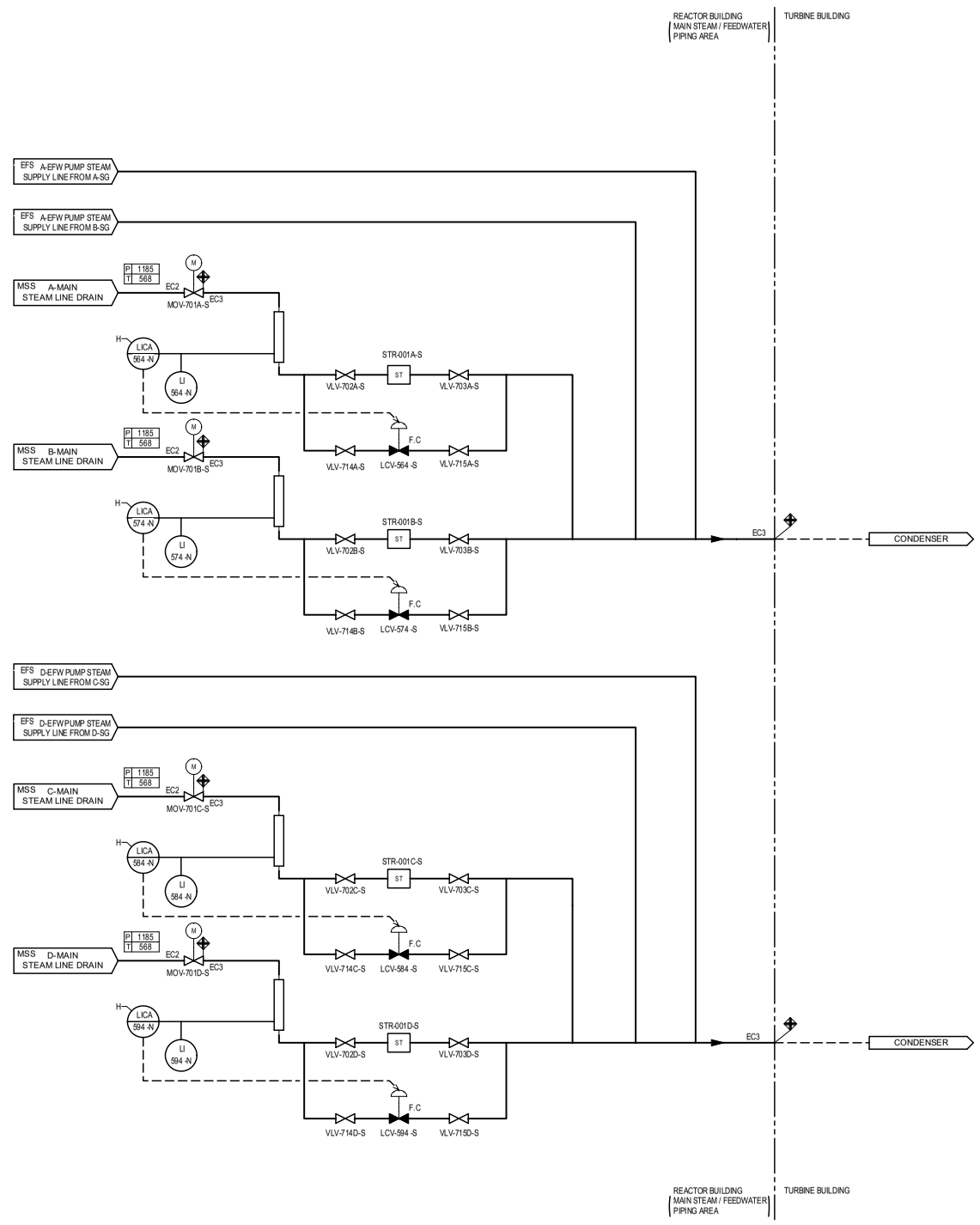

Figure 10.3-3 Main Steam Supply System Piping and Instrumentation Diagram (3/4)

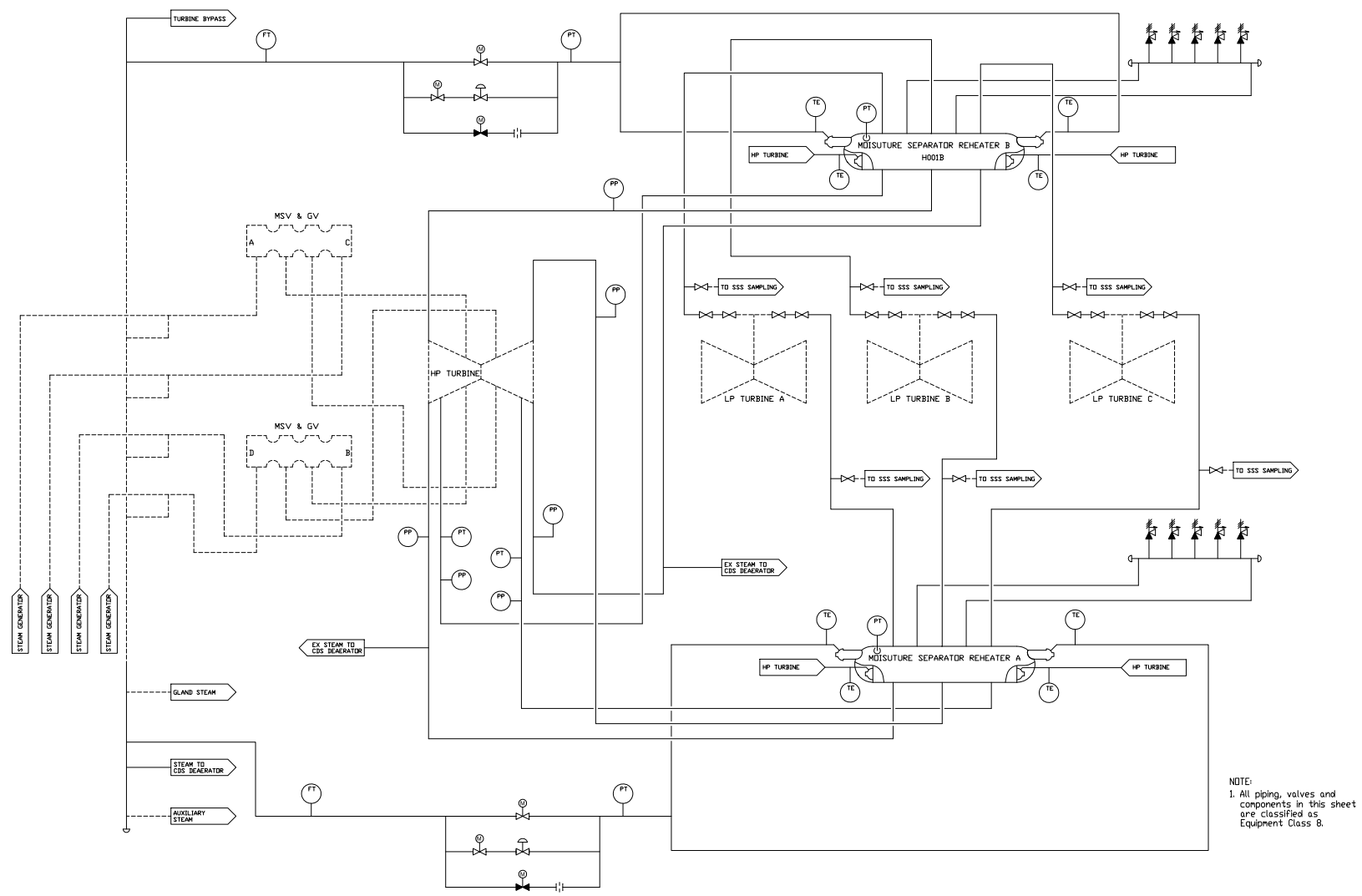

Figure 10.3-4 Main Steam Supply System Piping and Instrumentation Diagram (4/4)

10.4 Other Features of Steam and Power Conversion System

10.4.1 Main Condensers

The main condenser functions to condense and deaerate the exhaust steam from the main turbine and provide a heat sink for the turbine bypass system.

10.4.1.1 Design Basis

10.4.1.1.1 Safety Design Basis

The main condenser performs no safety-related function and therefore has no nuclear safety design basis.

10.4.1.1.2 Power Generation Design Basis

- The main condenser is designed to receive and condense the rated power exhaust steam flow from the low-pressure turbine and to perform as a reservoir for vents and drains from various components.
- The main condenser is also designed to receive and condense the turbine bypass steam up to 67.5 percent of plant rated steam flow, while condensing the residual low-pressure turbine steam flow. This condensing action is accomplished without exceeding the maximum allowable condenser backpressure for main turbine operation.
- At the normal operating water level, the condenser hotwell is designed for a five minute hold up time at rated condensate flow rate.
- The main condenser is designed to deaerate the condensate so that the dissolved oxygen in the condensate remains under 10 ppb during rated power operation.

10.4.1.2 System Description

The main condenser is part of the condensate system (CDS). The condensate system is described in Subsection 10.4.7 and shown in Figure 10.4.7-1 through 10.4.7-4. Classification of equipment and components is given in Section 3.2. Table 10.4.1-1 provides main condenser design data.

The main condenser is a three-shell, single-pass, single pressure, divided water boxes and rigidly supported unit. Each shell is located beneath its respective low-pressure turbine. The condenser is equipped with titanium tubes. The titanium material provides good corrosion and erosion resisting properties.

The condenser shells operate at the same pressure and temperature due to the equalizing pipe, which connects each condenser shell at neck area. Condensate is drawn from the hotwell of each condenser, and then flows through a single header to the suction of the condensate pumps.

The condenser shells are located below the turbine building operating floor and are rigidly supported on the turbine foundation. An expansion connection is provided between each low-pressure turbine exhaust opening and the steam inlet connections of the condenser. Four low-pressure feedwater heaters are located in the neck area of each condenser shell. Nozzles are provided at the bottom of condenser hotwell for instrumentation and control and leak detection connections.

10.4.1.2.1 System Operation

During normal power operation, exhaust steam from the low-pressure turbines is directed into the main condenser shells. The condenser also receives system flows from feedwater heater vents and drains and gland steam condenser drain.

The hotwell level controller provides automatic makeup or rejection of condensate to maintain a normal level in the condenser hotwells. On low level, the makeup control valves open and admit condensate to the hotwell from the condensate storage tank. On high-water level, the condensate reject control valves open to divert water from the condensate pump discharge to the condensate storage tank. This rejection automatically stops when the hotwell level reaches normal operating range.

Air inleakage and noncondensable gases contained in the turbine exhaust steam are collected in the condenser and removed by the main condenser air removal system. The main condenser evacuation system is discussed further in Subsection 10.4.2.

To protect the condenser shells and turbine outer casings from overpressurization, steam relief blowout diaphragms are provided in the low-pressure turbine outer casings. Pressure transmitters are provided on the condenser shells to detect the loss of the condenser vacuum. Pressure transmitters generate a turbine trip signal upon detecting the condenser pressure above its setpoint.

The main condenser is capable of accepting up to 67.5 percent of rated load main steam flow from the turbine bypass system. Operation of the turbine bypass system is discussed in Subsection 10.4.4.

In the event of a high condenser pressure or trip of all circulating water pumps, or trip of all condensate pumps, the turbine bypass valves are prohibited from opening.

Perforated distribution piping or baffle plates are installed to protect the condenser tubes, feedwater heaters located in the condenser neck, and other condenser components from turbine bypass steam or high-temperature drains entering the condenser shell.

The main condenser interfaces with the tube leak detection system as discussed in Subsection 9.3.2 to permit sampling of the condensate in the condenser hotwell. Should circulating water in-leakage occur, these provisions permit determination of which tube bundle has sustained the leakage. Steps may be taken to repair or plug the leaking tubes. This is performed by isolating the circulating water system from the affected water box. Plant power is reduced as necessary. The water box is then drained and the affected tubes are either repaired or plugged.

Condensate polishing system is taken into service, when the circulating water in-leakage is detected. The permissible cooling water in-leakage and the length of time the condenser may operate with in-leakage without affecting the condensate/feedwater quality for safe reactor operation is described in Subsection 10.4.6.

The condenser tube cleaning system performs mechanical cleaning of the circulating water side of the titanium tubes. This cleaning, along with chemical treatment of the circulating water, reduces fouling and helps to maintain the thermal performance of the condenser.

10.4.1.3 Safety Evaluation

The main condenser has no safety-related function and therefore requires no nuclear safety evaluation.

During normal operation and shutdown, the main condenser has no significant inventory of radioactive contaminants. Radioactive contaminants may enter through a steam generator tube leak. A discussion of the radiological aspects of primary-to-secondary leakage, including anticipated operating concentrations of radioactive contaminants, is included in Chapter 11. Concerning secondary side chemical injection under normal operating conditions, pH controller and oxygen scavenger are injected as described in Subsection 10.4.10. Regarding source of hydrogen, thermal decomposition of hydrazine described in Subsection 10.4.10.2.2.2 can be considered. But “Air, nitrogen, and ammonia are mainly included in these noncondensable gasses.” as described in the third paragraph of Subsection 10.4.2.2.1. Therefore, the potential for hydrogen buildup within the condenser shells does not exist. Furthermore, since during normal plant operation, noncondensable gases are removed from the main condenser by the operation of one or two vacuum pumps. If one pump trips, the condition is alarmed in the main control room, and the standby pump is started as described in the second paragraph of Subsection10.4.2.2.3, the potential for hydrogen buildup within the condenser shells does not exist due to pump failure. Therefore, no hydrogen buildup in the main condenser is anticipated. The failure of the main condenser and any resultant flooding will not preclude operation of any essential system since no safety-related equipment is located in the turbine building and the water cannot reach safety-related equipment located in Category I plant structures, since in the yard area, the flood volume is directed away from the plant structures by virtue of the site grading and yard drainage system. In addition, the water tight doors are installed in the doorways at ground level between T/B and R/B as described in Subsection 3.4.1.3.

10.4.1.4 Tests and Inspections

The condenser water boxes are hydrostatically tested after erection. Condenser shells are tested by completely filling them with water. Tube joints are leak tested during construction.

10.4.1.5 Instrumentation Applications

The main condenser hotwell is equipped with level control devices for control of automatic makeup and rejection of condensate. The condensate level in the condenser hotwell is

indicated in the main control room and alarms are provided for high or low level conditions.

Condenser pressure is indicated in the main control room, and annunciates high condenser pressure prior to reaching the turbine trip set point.

Temperature indication is provided for monitoring condenser performance.

Table 10.4.1-1 Main Condenser Design Data

Condenser type		Horizontal, Radial Flow, Single Pressure, Single Pass, Surface Cooling Type
Number of Shell		3
Design operating pressure		2.6 in.-HgA
Heat transfer		9.90×10^9 Btu/hr
Circulating water flow		1.28×10^6 gpm
Circulating water inlet temperature		88.5°F
Circulating water outlet temperature		104°F
Circulating water temperature rise		15.5°F
Hotwell storage capacity		5 min. (holdup time)
Tube size		1 in. O.D. 23 BWG
Shell pressure (design)		0 in.-HgA to 15 psig
Material	Shell	Carbon Steel
	Tube	Titanium
	Tube Sheet	Titanium Clad
	Water Box	Carbon Steel with rubber lining

10.4.2 Main Condenser Evacuation System

The main condenser evacuation function is achieved by the main condenser evacuation system (MCES) with vacuum pumps. The MCES removes noncondensable gases from the main condenser during plant startup and normal operation and establishes and maintains a vacuum in the main condenser.

10.4.2.1 Design Bases

10.4.2.1.1 Safety Design Bases

The MCES does not serve any safety-related function, and thus, has no safety design bases.

10.4.2.1.2 Non-safety Power Generation Design Bases

- The MCES is designed to remove noncondensable gases from the main condenser during plant startup and normal operation, and to exhaust them to the environment in conformance with General Design Criteria (GDC) 60 and 64 of Appendix A to 10 CFR Part 50 (Reference 10.4-1).
- The MCES is designed to establish and maintain a vacuum in the main condenser during plant startup and normal operation by the use of vacuum pumps.
- The vacuum pumps are sized in accordance with Heat Exchange Institute (HEI) “Standards for Steam Surface Condensers” (Reference 10.4-2).
- Piping and valves are designed in accordance with ASME B31.1 “Power Piping” (Reference 10.4-3).

10.4.2.1.3 Classifications

The classification of the MCES is given in Section 3.2.

10.4.2.2 System Description

10.4.2.2.1 General Description

The MCES is shown in Figure 10.4.2-1.

The MCES consists of three vacuum pumps. The vacuum pumps remove noncondensable gases from the three condenser shells during normal operation and are used for condenser hogging during plant startup. Noncondensable gases with water vapor are drawn from the condenser shells, through the air cooler section of the condenser tube bundle core, to the suction of the vacuum pumps.

Air, nitrogen, and ammonia are mainly included in these noncondensable gases. Therefore, hydrogen buildup is not expected in the condenser shells. Dissolved oxygen will be present in the condensate and condenser hotwell inventory. Only trace amounts of this oxygen will be released in the condenser, and the amounts are considered negligible

compared to the large amounts of air being evacuated by the MCES. Therefore, the potential for explosive mixtures within the condenser shells does not exist.

The turbine component cooling water system provides the cooling for the vacuum pump seal water cooler. The vacuum pump seal water cooler uses turbine component cooling water so that the seal water is kept cooler than the saturation temperature of the condenser at its operating pressure to maintain the required pump performance.

The noncondensable gases removed from the main condenser and exhausted by the vacuum pumps are directed to the vent of the MCES. The exhaust flow is monitored for radioactivity prior to exhaust to environment. The noncondensable gases that are exhausted to the environment from the MCES are not normally radioactive. However, it is possible for the noncondensable gases to become contaminated in the event of primary-to-secondary system leakage. When an unacceptable radioactivity level is detected in the exhaust flow, adequate operating procedures are implemented. A discussion of the radiological aspects of primary-to-secondary leakage, including anticipated release from the system, is included in Chapter 11. The statement regarding the key elements, unacceptable levels of radiation and alarm set points to preclude significant releases radiation is addressed in Subsection 11.5.2.4.2. The statement regarding the location of the detectors is shown in Figure 11.5-1i and Figure 11.5-2c.

As long as the MCES is operable, the reactor coolant system operation is not affected. When the MCES becomes inoperable, a gradual decrease in condenser vacuum would result from the buildup of noncondensable gases. This decrease in condenser vacuum would cause a decrease in the turbine cycle efficiency. If the MCES remains inoperable, the condenser vacuum decreases to the turbine trip setpoint and a turbine trip is initiated.

A loss of condenser vacuum incident is described in Subsection 15.2.3.

10.4.2.2.2 Component Description

The MCES consists of three vacuum pumps. Each vacuum pump is supplied as packaged units and includes a liquid ring type vacuum pump, seal water cooler, seal water pump, separator tank.

The seal water pump supplies seal water from the separator tank to the vacuum pump. The seal water is used to seal clearances in the pump and also to condense vapor at the inlet to the pump.

The seal water cooler is installed between the vacuum pump and the seal water pump and cools the seal water by the turbine component cooling water. The seal water flows through the shell side of the seal water cooler and the turbine component cooling water flows through the tube side.

The separator tank separates mist water from noncondensable gases and store up the separated water. Seal water make up is provided to the separator tank by the condensate system and demineralized water system.

The design data of major system components are provided in Table 10.4.2-1.

10.4.2.2.3 System Operation

During startup operation, air is rapidly removed from the main condenser by operating the three condenser vacuum pumps.

During normal plant operation, noncondensable gases are removed from the main condenser by the operation of one or two vacuum pumps. If one pump trips, the condition is alarmed in the main control room, and the standby pump is started.

10.4.2.3 Safety Evaluation

The MCES does not serve any safety-related function, and thus, requires no safety evaluation.

10.4.2.4 Tests and Inspections

Testing and inspection of the MCES is performed prior to plant operation.

A performance test is conducted on each vacuum pump in accordance with HEI "Performance Standard for Liquid Ring Vacuum Pumps" (Reference 10.4-4). The pumps are also hydrostatically tested.

Components of the MCES are continuously monitored during operation to ensure satisfactory performance.

Periodic inservice tests and inspections of the MCES are performed in conjunction with the scheduled maintenance outages.

10.4.2.5 Instrumentation Applications

Indicating devices (e.g., pressure, temperature, and flow indications) are provided as required for monitoring the system operation. The vacuum pump status (on/off) is indicated in the main control room, and the pump trips are alarmed. Volumetric flow indication is provided to monitor the quantity of exhausted noncondensable gases.

A radiation detector is provided to the vent of the MCES to monitor the discharge of the condenser vacuum pumps. Radiation is indicated and alarmed in the main control room. For a description of process and effluent radiological monitoring and sampling systems, refer to Section 11.5

Table 10.4.2-1 Main Condenser Evacuation System Design Data

CONDENSER VACUUM PUMP

Number of pumps	3
Type	liquid ring type
Capacity	24 Standard CFM at 1 inHg A
Driver	Electric motor

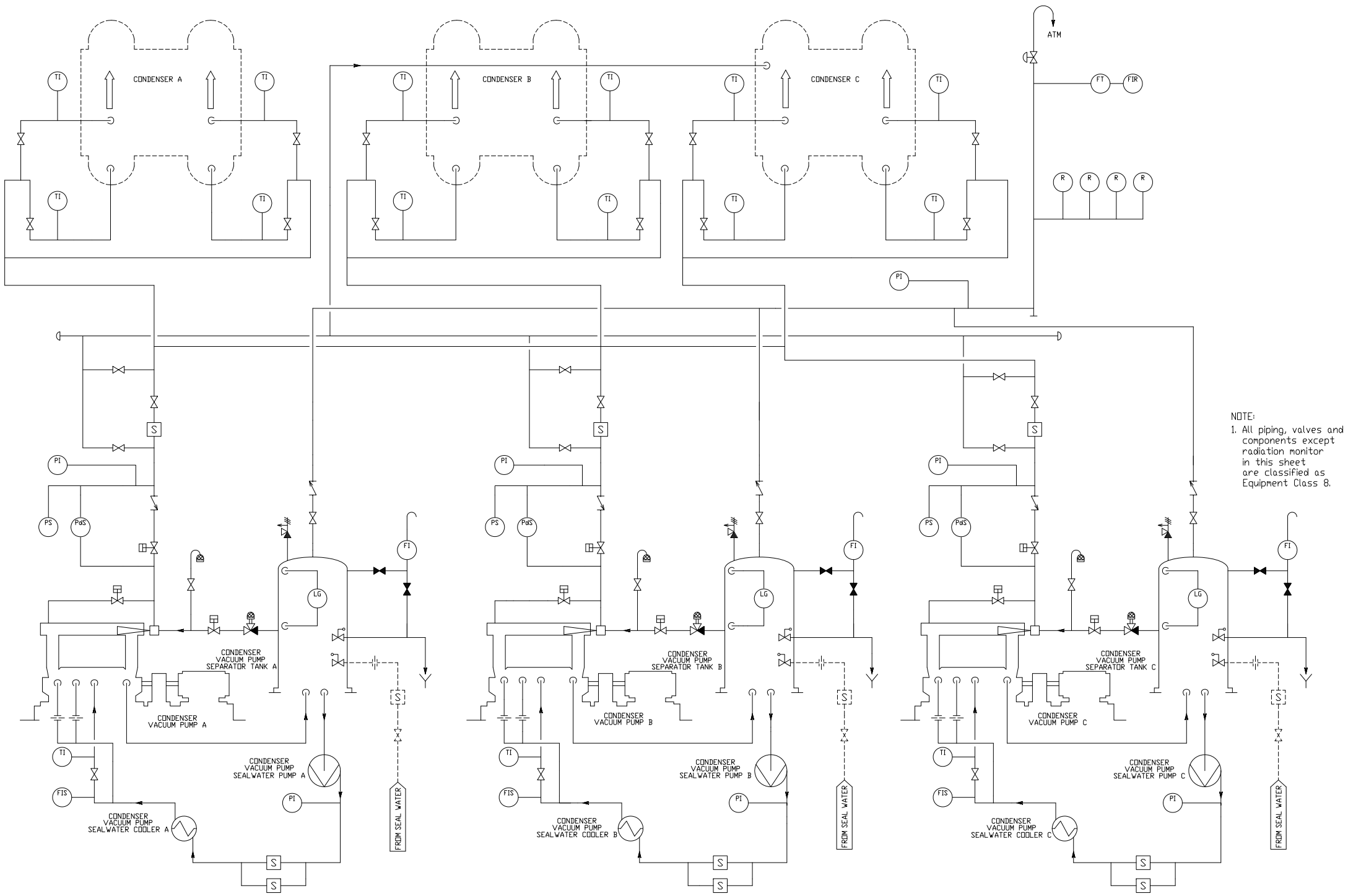

Figure 10.4.2-1 Main Condenser Evacuation System Piping and Instrumentation Diagram

10.4.3 Gland Seal System

10.4.3.1 Design Basis

10.4.3.1.1 Safety Design Basis

The gland seal system (GSS) has no safety-related function and therefore has no nuclear safety design basis.

10.4.3.1.2 Non Safety Power Generation Design Basis

- The gland seal system prevents air leakage into and steam leakage out of the casings of the turbine-generator.
- The system returns condensed steam to the gland steam condenser and exhausts non-condensable gases into the atmosphere.
- The presence of radioactive contamination in the non-condensable gas exhausted from the gland steam condenser, is detected by a radiation monitor located in the GSS exhaust line in conformance with general Design Criteria (GDC) 60 and 64 of Appendix A to 10 CFR Part 50 (Reference 10.4-1).

10.4.3.2 System Description

10.4.3.2.1 General Description

The gland seal system consists of a gland steam condenser with two motor-driven exhaust fans, the seal pressure regulator, sealing steam header, and associated piping, valves, and controls.

The GSS is depicted in Figure 10.4.3–1 and the component safety, quality and seismic classifications are provided in Section 3.2.

10.4.3.2.2 System Operation

The annular space through which the turbine shaft penetrates the turbine casing is sealed by steam supplied to the rotor glands. Where the packing seals against positive pressure, the sealing steam connection acts as a leakoff. Where the packing seals against vacuum, the sealing steam either is drawn into the casing or leaks outward to a vent annulus maintained at a slight vacuum. The vent annulus receives air leakage from the outside. The air-steam mixture is drawn to the gland steam condenser.

Sealing steam is distributed to the turbine shaft seals through the steam-seal header. This sealing steam is supplied from either the auxiliary steam supply system (ASSS) system, or from the main steam supply system (MSS) extracted from the main steam header. Steam flow to the header is controlled by the steam-seal control valve which responds to maintain the steam-seal supply header pressure. Each low and high-pressure turbine gland sealing system has a separate steam pressure regulating valve which provides sealing steam. Excess steam from the high-pressure turbine is returned to the No. 1

feedwater heaters via the spillover control valve which automatically opens to bypass excess steam from the GSS.

During the initial startup phase of turbine-generator operation, steam is supplied to the gland seal system from the auxiliary steam header which is supplied from the auxiliary boiler. At times other than the initial startup, turbine-generator sealing steam is supplied either from the auxiliary steam system, or from the main steam system.

At the outer ends of the glands, collection piping routes the mixture of air and excess seal steam to the gland steam condenser. The gland steam condenser is a shell and tube type heat exchanger where the steam-air mixture from the turbine seals is discharged into the shell side and condensate flows through the tube side as a cooling medium. The gland seal condenser internal pressure is maintained at a slight vacuum by a motor-operated exhaust fan. There are two-100-percent exhaust fans mounted in parallel. Condensate from the steam-air mixture drains to the main condenser via the condensate recovery tank while non-condensable gases are exhausted to the atmosphere.

The mixture of non-condensable gases discharged from the gland steam condenser exhaust fan is not normally radioactive; however, in the event of significant primary-to-secondary system leakage due to a steam generator tube leak, it is possible to discharge radioactively contaminated gases. The GSS effluents are monitored by a radiation monitor installed on the gland steam condenser exhaust fan discharge line. Upon detection of unacceptable levels of radiation, operating procedures are implemented. A discussion of the radiological aspects of primary-to-secondary leakage, including anticipated release from the system, is addressed in Chapter 11. The statement regarding the key elements and system is addressed in 2nd paragraph of Subsection 11.5.2.4.3. The statement regarding unacceptable levels of radiation and provision of alarms and corresponding set points to preclude significant release of radiation is addressed in 1st paragraph of Subsection 11.5.2.4.3. The detail on how the effluents are discharged to the environment is shown on Figure 11.5-1j and Figure 11.5-2g.

10.4.3.3 Safety Evaluation

The gland seal system has no safety-related function and therefore requires no nuclear safety evaluation.

10.4.3.4 Tests and Inspections

The testing and the inspection will be performed in accordance with written procedures during the initial testing and operation program in accordance with the requirements of Chapter 14.

10.4.3.5 Instrumentation Applications

A pressure controller is provided to maintain the steam-seal supply header pressure by providing signals to the steam-seal control valve. Pneumatic control valves are used to provide appropriate pressure to both the low- and high-pressure turbine glands. Excess

steam flow from high-pressure turbine glands is handled by the gland spillover control valve which discharges to the No. 1 feedwater heaters.

The gland seal condenser is monitored for shell side pressure and internal liquid level.

Pressure indication with an appropriate alarm is provided for monitoring the operation of the system. A radiation detector with an alarm is provided in the discharge piping to atmosphere to detect radiation associated with primary-to-secondary side leakage in the steam generators.

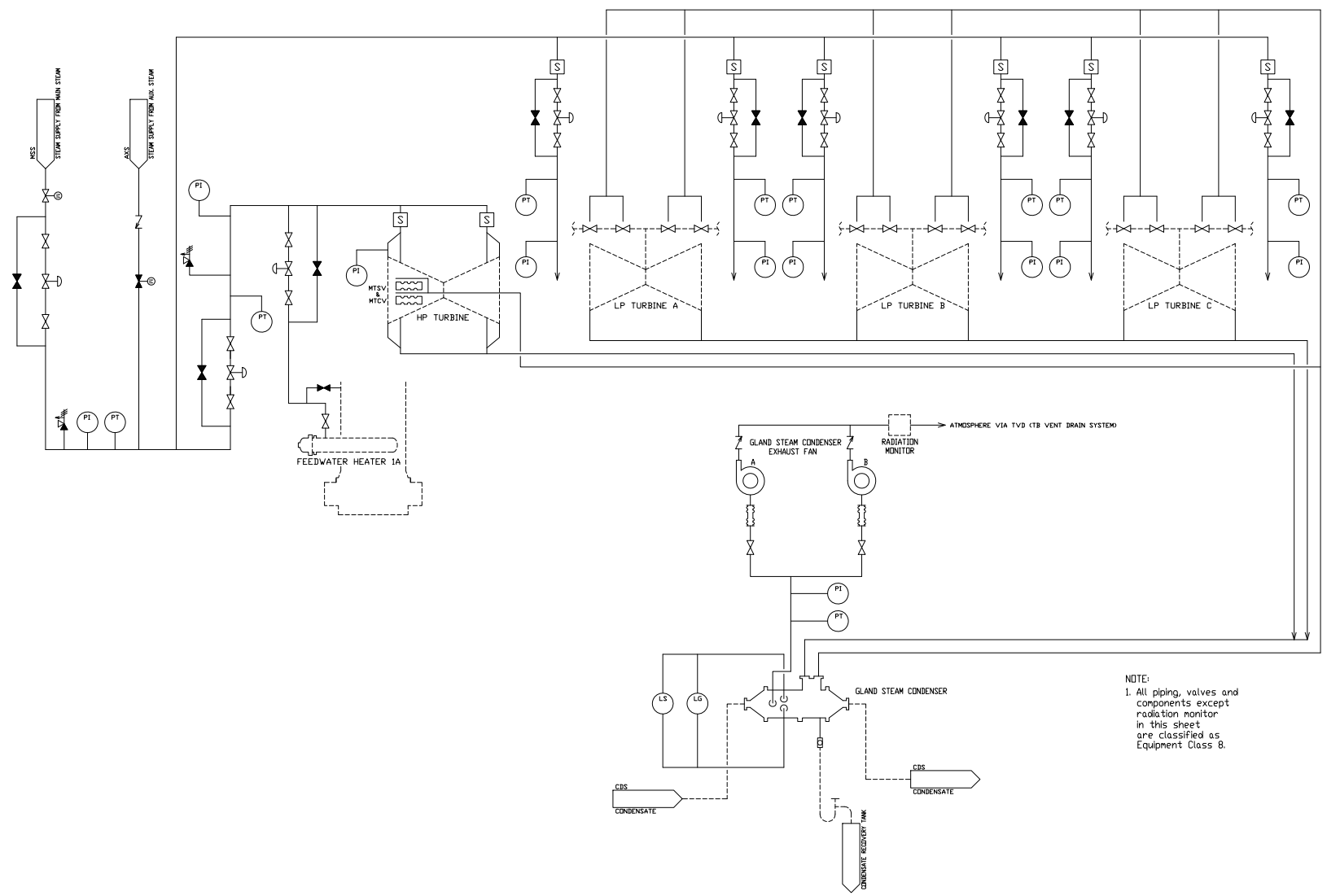

Figure 10.4.3-1 Gland Seal System Piping and Instrumental Diagram

10.4.4 Turbine Bypass System

The turbine bypass system (TBS) as described in this Subsection is part of the main steam system (MSS) and provides capability to flow the main steam from the steam generators (SG) to the main condenser bypassing the main turbine. This is done in a controlled manner to dissipate heat and to minimize transient effects on the reactor coolant system during startup, hot standby, cooldown and the generator step-load reduction.

10.4.4.1 Design Bases

10.4.4.1.1 Safety Design Bases

The TBS serves no safety-related function and thus has no nuclear safety design basis.

10.4.4.1.2 Non-safety Power Generation Design Bases

The following is a list of the non-safety power generation design bases:

- The TBS has the capacity to bypass 67.5 % of the rated power steam flow to the main condenser at full power operation.
- The TBS is designed to sustain a 100 % load rejection (electrical load), without generating a reactor trip, and without requiring actuation of the main steam relief valve (MSRV), main steam safety valve (MSSV) or pressurizer safety valve.
- The TBS is designed to bypass steam to the main condenser during plant shutdown to facilitate a manually controlled cooldown of the reactor coolant system to the point where the residual heat removal system can be placed in service for further cooldown.
- The TBS bypasses steam to the main condenser during plant startup
- The TBS is designed to follow rapid turbine load reductions greater than 10 % but less than 100 % without resulting in reactor trip.

10.4.4.2 System Description

10.4.4.2.1 General Description

The TBS is part of the MSS and is shown on Figures 10.3-2 and 10.3-3. The equipment and component classification and applicable codes and standards are provided in Section 3.2.

The TBS consists of a turbine bypass valve header tapped from the main steam equalization piping upstream of the main turbine stop valves, piping, valves and instrumentation. Two individual sub-headers per condenser shell are tapped from the bypass valve header. Lines with the TBVs are connected to these sub-headers. TBVs discharge to condenser shell(s) via two sub-headers per shell.

TBV header consists of 42-inch, 36-inch and 20-inch diameter pipe sections. The header is tapped with 20-inch diameter lines, two per condenser shell. Each 20-inch line feed into individual 10-inch bypass valves via 12 inch diameter pipe. The valve discharge pipe is a 20-inch diameter pipe feeding to a 36-inch diameter header. These headers discharge to the condenser shells.

A low point drain, provided upstream of each turbine bypass control station, removes moisture continuously to prevent water accumulation. This helps reduce the potential of water slug impingement on the condenser internals following sudden opening of a control valve.

A total of 15 TBVs are provided. Three sets of five valves each discharge to the condenser shells A, B and C.

The TBS capacity, inconjunction with the NSSS control systems, provides the capability to meet the design requirements bases specified in Subsection 10.4.4.1.2. For power changes less than or equal to a 10 % change in the electrical load or less than or equal to 5 % per minute ramp load change, the TBS is not actuated.

10.4.4.2.2 Component Description

There are 15 TBVs. Design data is provided in Table 10.4.4-1.

The TBVs are globe valves, air-operated with positioners. The valves are designed to fully open in 3 seconds after the receipt of the signal and then modulate proportionally within 20 seconds. The valves fail closed on loss of air or electrical signal. The modulating positioner responds to the signal from the control system and provides appropriate air pressure to the valve actuator to modulate valve open position. The reactor control and protection system controls the valve operation.

10.4.4.3 System Operation

The TBS has two operating modes:

- T_{avg} control mode
- Pressure control mode

The T_{avg} control mode is the at-power transients mode requiring turbine bypass, such as load rejection (where the load rejection controller is used) and turbine trips (where the turbine trip controller is used). In this mode, the turbine bypass system operates to sustain a 100 % load rejection, without generating a reactor trip or actuating a MSRV, MSSV or pressurizer safety valve. The TBS also removes stored energy or residual heat following a reactor trip.

An independent load rejection sensing circuit prevents TBS actuation on small load perturbations. The rate of decrease in the turbine load as detected by the turbine inlet pressure is sensed. It unblocks the TBVs when the rate of load rejection exceeds a

preset value corresponding to a 10% step load decrease or a sustained ramp load decrease of greater than 5% per minute.

The load rejection controller prevents a large increase in the reactor coolant temperature following a large, sudden load decrease. The error signal is a difference between the lead-lag compensated selected T_{avg} and the selected Tref based on turbine inlet pressure and a difference between the nuclear power signal and the turbine inlet pressure with a rate-lag compensation.

Following a turbine trip, the load rejection controller is defeated and the turbine trip controller becomes active. The error signal is a difference between the lead-lag compensated T_{avg} and the no-load reference T_{avg}.

The pressure control mode is used at no-load operational mode. Pressure mode control is used to remove decay heat during plant startup and cooldown. The difference between the steam equalization piping pressure and a pressure set point is used to control the turbine bypass flow. The pressure set point is manually adjustable and is based on the desired reactor system coolant temperature.

10.4.4.4 Safety Evaluation

The TBS serves no safety function and has no safety design basis. There are no safety-related equipment/components in the vicinity of the TBS components. All high-energy lines of the TBS are located in the turbine building.

The failure of a TBS high-energy line will not disable the turbine speed control system.

The bypass valves fail closed upon loss of motive air power or electric signal. This is to prevent the possibility of the primary side of the plant from over cooling. In this case, MSRVs provide the controlled cooldown. In the unlikely event that one of the TBVs sticks wide open, the maximum steam flow through one valve at full load main steam pressure is less than the maximum permissible flow to limit a reactor transient.

The TBS is designed to bypass steam to the main condenser during normal plant shutdown. The system removes the residual heat and cools the reactor coolant system to a point where the RHR system is placed in service for further cooldown. Three TBVs with 13.5 % of rated main steam flow of 20,200,000 lb/h at a valve inlet pressure of 792 psia perform adequate decay heat removal to keep the cooldown rate of reactor coolant system at 50 deg.F/h during normal plant shutdown and thereby reduce the demands on systems important to safety in meeting GDC 34.

10.4.4.5 Inspection and Tests

Before the system is placed in service, all TBVs are tested for operability. The pipelines are hydrostatically tested to verify leak tightness. All piping and valves are accessible for inspection.

Additional description of inspection and tests is provided in Section 14.2.

10.4.4.6 Instrumentation Application

Instrumentation for the TBS is described in Section 7.7. Controls are provided in the main control room for the system operating mode selection. Pressure indication and the valve position indication are provided in the main control room.

Table 10.4.4-1 TBS Component Design Parameters

Turbine Bypass Valves

Number of valves	15
Capacity/valve (Requirement), (lb/hr)	909,000
Total capacity (Requirement), (lb/hr)	13,635,000
Design Pressure (psig)	1,185
Design Temperature (°F)	568
Nominal valve size (inch)	10

10.4.5 Circulating Water System

The circulating water system (CWS) supplies cooling water to remove heat from the main condensers, under varying conditions of power plant operation and site environmental conditions, described in Table 10.4.5-1.

10.4.5.1 Design Bases

10.4.5.1.1 Safety Design Basis

The CWS does not have a safety-related function and has no safety design basis.

10.4.5.1.2 Non safety Power Generation Design Basis

CWS removes heat load during startup, normal shutdown, transient condition, or turbine trip, when a portion of the main steam is bypassed to the main condenser via the turbine bypass valves (TBV). If the main condenser is not available during a loss of offsite power (LOOP) event, cooldown of the reactor is achieved by using the main steam depressurization valves rather than the turbine bypass system (TBS).

10.4.5.2 System Description

10.4.5.2.1 General Description

Figure 10.4.5-1 depicts the CWS flow diagram. The CWS draws water from the [[CWS cooling tower (CTW) Basin]], and returns water to [[the CWS CTWs]] after passing through main condenser. The CWS [[and CTW]] design and selection is subject to site-specific environmental conditions, as indicated in Table 10.4.5-1. The COL Applicant is to determine the site-specific final system configuration and system design parameters for the CWS including makeup water and blowdown.

The CWS has the following design functions:

The CWS supplies cooling water at the specified flow rate to condense the steam in the condenser, in accordance with the heat balance provided in Section 10.1.

The CWS is automatically isolated in the event of gross leakage into the turbine building (T/B) condenser area to prevent flooding of the T/B.

The CWS is designed such that a failure in a CWS component (piping, [[cooling tower]], expansion joint, pump, etc.) does not have a detrimental effect on any safety-related equipment/component.

The CWS is composed of [[eight, 12.5 percent capacity]] circulating water pumps, [[CTWs, CTW basins, makeup water pump(s)]], blowdown pump(s), and associated piping, valves, strainers, and instrumentation.

The circulating water pumps are located in the [[CTW Basins]], and take suction from the [[CTW basin]] and pump water through the main condenser under varying conditions of

power plant loading and design weather conditions. Design parameters for the major components are described in Table 10.4.5-1.

The CWS consists of [[two CTW assemblies]] which provide 100 percent cooling for normal power operation. [[Each CTW assembly contains two (2) back-to-back rows of cells]]. The discharge piping from the circulating water pumps is [[headered together into an intake manifold concrete pipe]], as shown in Figure 10.4.5-1 The CWS supply and discharge piping to the three shell main condenser contains butterfly-type isolation valves.

[[Makeup water is provided by the raw water system to compensate for the CTW evaporation, drift and blowdown. The CTW water chemistry is controlled by the CWS/raw water system chemical treatment system.]] It should be noted that three non-essential service water (non-ESW) pumps are located in the turbine building, and two pumps are operated and take suction from the CWS piping in the turbine building. The non-ESW flows through the turbine component cooling water system (TCS) heat exchangers, and connects back to the main condenser outlet piping. In addition to the CWS flow, [[the CTW]] are sized to also cool the non-ESW flow. The non-ESW is described in Subsection 9.2.9.

10.4.5.2.2 Component Description

The circulating water system consists of the following major components:

- Circulating water pumps
- [[Cooling towers and CTW basins]]
- Main condenser
- Condenser tube cleaning equipment
- [[CTW make up water and blowdown system]]
- [[Chemical treatment system]]
- Instrumentation and controls

10.4.5.2.2.1 Circulating Water Pumps

The circulating water pumps [[(eight 12.5% capacity)]] are [[vertical pump, wet pit type, single-stage mixed flow pumps driven by direct drive electric motors. Each cooling tower basin contains four circulating water pumps that are arranged in parallel.]]

10.4.5.2.2.2 [[Cooling Towers]]

[[Mechanical draft cooling towers have been selected for the CWS.

There are two CTWs each with 30 cells. Each cooling tower is arranged in two rows of 15 cells in each row, with the rows arranged back to back.

The cooling towers are located outdoors, a sufficient distance from any equipment or structure important to reactor safety.

The cooling towers and foundation are designed for wind load and earthquake loads.]]

10.4.5.2.2.3 Condenser tube cleaning

A condenser tube cleaning system is provided.

10.4.5.2.2.4 [[Cooling Tower Makeup Water Pumps]]

[[Two 100% capacity makeup water pumps provide makeup water. The makeup water pump provides the makeup water to the cooling tower basins. The makeup water pumps are vertical, driven by electric motors and are located in the raw water intake structure.]]

10.4.5.2.2.5 [[Blowdown Pumps]]

[[Two 100% capacity CTW blowdown pumps are located in each cooling tower basin. These pumps take suction from the CTW basin and discharge into the raw water source.]]

10.4.5.2.2.6 Piping and Valves

[[All above ground CWS piping is carbon steel piping designed, fabricated, installed and tested in accordance with ASME B31.1 Power Piping Code (Reference 10.4-3), with an internal coating of corrosion preventive compound. The underground portions of the circulating water system piping are constructed of pre-stressed concrete pressure piping with lining. The piping is arranged to allow easy access for inspection (i.e., access man ways for the large CWS underground pre-stressed concrete headers).]]

Motor-operated butterfly valves are provided in each of the circulating water lines at the inlet and exit from the condenser shell to allow isolation of portions of the condenser. Motor-operated butterfly valves are also provided at the discharge of each circulating water pump. [[Control valves are provided for the regulation of cooling tower blowdown and makeup.]]

10.4.5.2.2.7 Main Condenser

Refer to Subsection 10.4.1.

10.4.5.2.2.8 [[Chemical Injection]]

[[Biocide, algaecide, pH adjuster, corrosion inhibitor, and silt dispersant are injected into the CWS by the chemical injection system to maintain a non-scale forming condition and to limit biological growth. The chemicals are injected by metering pumps. Chlorine concentration is measured by grab samples. Residual chlorine is measured to monitor the effectiveness. Chemical injection is interlocked with each circulating water pumps to

prevent chemical injection when the circulating water pumps are not running. Chemical injection is also provided for in the makeup water and blowdown systems.]]

10.4.5.3 Operation

10.4.5.3.1 Plant Startup

CWS is in operation prior to establishing vacuum in the main condenser.

10.4.5.3.2 Normal Operation

The circulating water pumps take suction from the [[CTW basin structure]] and circulate the water through the tube side of the single-stage main condenser to maintain the required vacuum conditions, and CWS is returned to the discharge piping network in the [[cooling tower. The mechanical draft CTWs cool the circulating water by discharging the water over a network of baffles in the tower. The water then falls to the basin beneath the cooling tower and, in the process, gives up heat to the atmosphere.

The flow to the CTW can be diverted directly to the basin, bypassing the tower internals. This is achieved by opening the motor-operated bypass valve(s) while operating the number of circulating water pumps, as necessary.

The makeup water pumps supply water to the CTWs to replace water losses due to evaporation, wind drift, and blowdown. The makeup water is supplied to the cooling tower basin.

During normal plant operation, biocides are added to the circulating water to control biological growth, as needed.

Blowdown from the CWS is taken from the cooling tower basin and is dechlorinated, as required, and discharged. Water being discharged into the lake/river/pond meets appropriate regulatory requirements.]]

10.4.5.3.3 Plant Shutdown

When the condenser is available, the CWS operates until the RHR system is placed in service. The CWS is not required during safe-shutdown following a DBA, nor when the condenser is not available.

10.4.5.3.4 Abnormal Operation

10.4.5.3.4.1 Circulating Water Piping/Expansion Joint Failures

Large CWS leaks due to pipe/expansion joint failures is indicated and alarmed in the control room by a loss of vacuum in the condenser shell. The effects of flooding due to a CWS failure, such as the rupture of an expansion joint, assumes that the flow into the T/B comes from both the upstream and downstream side of the break and also conservatively assumes that one system isolation valve does not fully close. This does not result in

detrimental effects on safety-related equipment since there is no safety-related equipment in the T/B and the base slab of the T/B is located at grade elevation.

Water from a system rupture discharges from the T/B through a relief panel in the T/B wall before the level can rise high enough to cause damage. Site grading carries the water away from safety-related buildings.

Based on the above conservative assumptions, the CWS and related facilities are designed such that the selected combination of plant physical arrangement and system protective features ensures that credible potential circulating water spills inside the T/B remain confined inside the T/B condenser area.

[[The CTWs are located outdoors, a sufficient distance from any equipment or structure important to reactor safety.]] A postulated CWS line break in the yard area or a failure in the [[CTW basin]] does not impact any safety-related component or any component required for safe-shutdown of the plant, since the nuclear island is physically located far from the [[CTW basin structure]].

10.4.5.3.4.2 Leakage from/into the System

Any leakage from the CWS due to tube leakage into the main condenser is detected by the secondary sampling system (SSS).

Also, the TCS is maintained at a higher pressure than the non-ESW system (which draws water from CWS) to prevent leakage of the non-ESW into the TCS.

Small CWS leaks would drain into the T/B drain sump via the floor drains. The T/B drain sump is provided with sump pumps and with high-level alarms.

10.4.5.4 Safety Evaluation

The circulating water system is a non safety-related system, and hence, no safety evaluation is provided.

10.4.5.5 Tests and Inspections

All active components of the CWS are accessible for inspection during plant power generation. The circulating water pumps, [[makeup water pumps and blowdown pumps]] are tested in accordance with the Standards of the Hydraulic Institute (Reference 10.4-5).

Performance, hydrostatic, and leakage tests associated with preinstallation and preoperational testing are performed on the CWS in accordance with the standards of the Hydraulic Institute (Reference 10.4-5) and the American Water Works Association Code 504-70 (Reference 10.4-6). The performance along with the structural and leak-tight integrity of all system components are demonstrated by continuous operation.

A full power performance test of the CWS shall be performed following initial full power operation [[in accordance with CWS CTW Performance Standard ASME PTC 23 (Reference 10.4-7).]]

See Chapter 14 for details.

10.4.5.6 Instrumentation Applications

CWS valves, which control the flow path, can be operated by local controls or by remote controls located in the main control room.

The motor-operated circulating water pump discharge isolation valves are provided with position switches required for status indication in the main control room, and the interlock for the pumps.

Local pressure indications are provided on the circulating water pump discharge lines.

Differential pressure transmitters are provided to monitor the inlet/outlet differential pressure across each condenser tube bundle.

On the inlet and outlet branches to the condenser, local and remote temperature indications are provided.

[[Flow measurement for the makeup water to the CTW and for the CTW blowdown are provided.]]

Level instrumentation to monitor the water level in the condenser discharge water boxes are provided.

Level instrumentation in the main control room annunciates a low/high water level in the [[CTW basin]].

Level instrumentation in [[the CTW basin activates makeup water flow from the raw water system when required by transmitting level signals to the CTW makeup water valves. The CTW basin makeup water valves can be aligned from the main control room.]]

[[CTW blowdown is controlled as a function of plant load (condensate flow) and circulating water conductivity, to maintain total dissolved solids (TDS) below a pre-established level. CTW blowdown also has a manual mode of operation.]]

[[The sampling system for the CWS periodically tests the circulating water quality to ensure that no harmful effects result to the system piping and valves due to improper water chemistry.]]

Level switches are provided in the T/B to monitor flooding condition and to trip the CWS pumps and close the valves of the CWS in case of a system component failure, and high-high water level condition.

Various status indications and alarms are provided for the CWS in the main control room.

Table 10.4.5-1 Design Parameters for Major Components of Circulating Water System (Sheet 1 of 3) (see Note 1)

Ambient design temperature	-
Design wet bulb temperature, (°F) (5% Exceedance)	76 (78 including 2 °F recirculation)
Circulating water pumps	-
Number of pumps	8
Flowrate (gpm)	164,715
Mechanical draft cooling towers	-
Number of towers	2
Number of cells in each cooling tower	30
Design inlet temperature (°F)	103.7
Design outlet temperature (°F)	88.5
Design temperature rise (°F)	15.2
CTW design approach temperature (°F)	10.5
Design flowrate (gpm)	1,290,720 plus 27,000 (for Non essential service water)

Table 10.4.5-1 Design Parameters for Major Components of Circulating Water System (Sheet 2 of 3) (see Note 1)

Makeup water pumps	-
Number of pumps	2
Flowrate (gpm)	31,200
Blowdown pumps	-
Number of pumps	2
Flowrate (gpm)	12,900

Table 10.4.5-1 Design Parameters for Major Components of Circulating Water System (Sheet 3 of 3) (see Note 1)

Piping and components design data	-
Design pressure/temperature, (psig/°F)	85/110
Material for Intake and discharge tunnel	Pre-stressed reinforced concrete with appropriate lining, if required by the CWS water chemistry.
Material for CWS above ground piping	ASTM A106, Grade B seamless carbon steel piping with lining ASTM A134, Grade C seam-welded carbon steel piping with lining
Type of CWS major valves	AWWA C504

Note:

1. Design parameters are dependent on site-specific conditions, and these values will change.

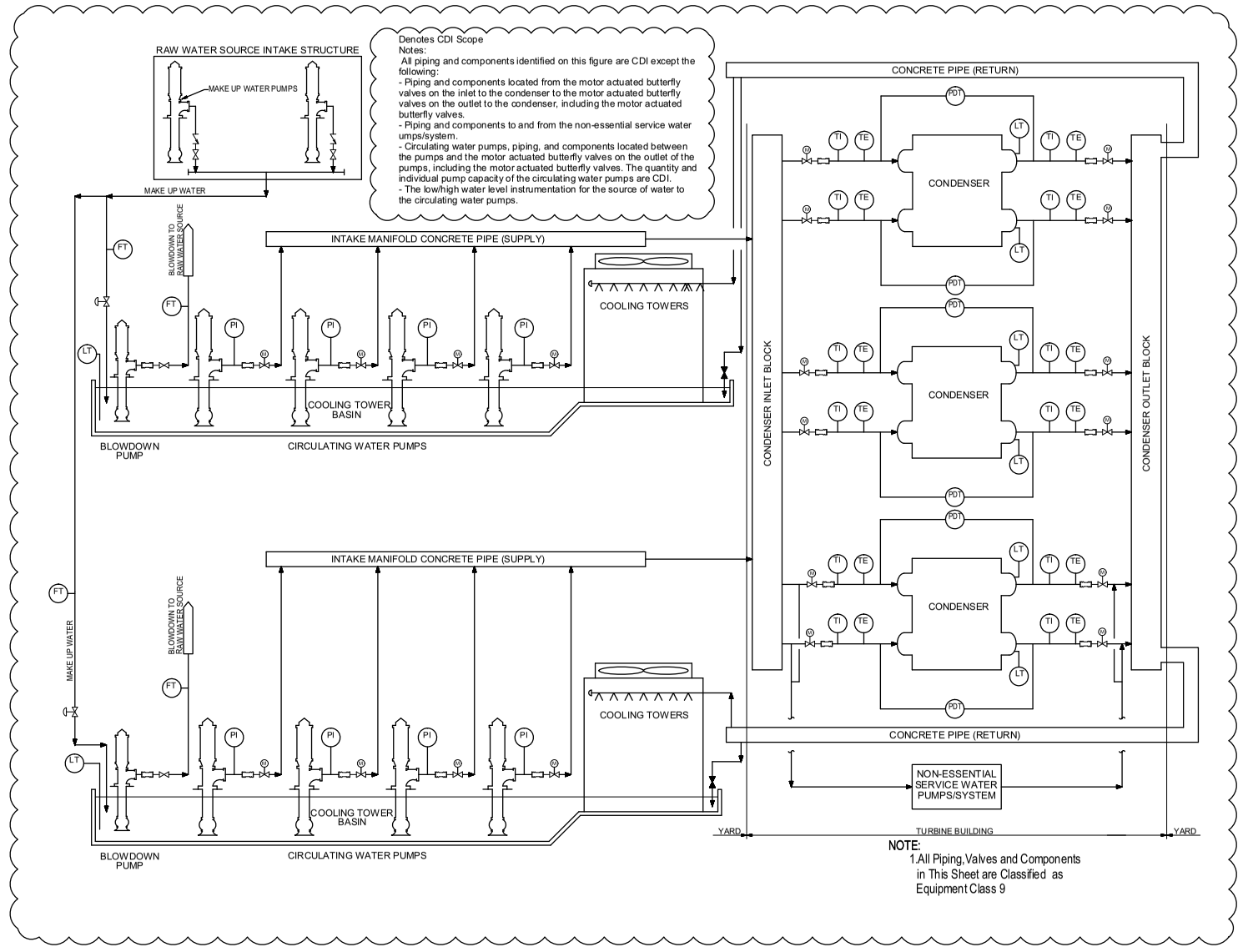

Figure 10.4.5-1 Circulating Water System Piping and Instrumentation Diagram

10.4.6 Condensate Polishing System

The condensate polishing system (CPS) is designed to remove dissolved ionic solids and impurities from the condensate. The CPS provides condensate cleanup capability and maintains condensate quality, on as needed basis, through demineralization.

10.4.6.1 Design Bases

10.4.6.1.1 Safety Design Bases

The CPS does not serve any safety-related function, and, thus, has no safety design bases.

10.4.6.1.2 Non safety Power Generation Design Bases

- The CPS is designed to remove dissolved ionic solids and impurities from the condensate and assists in the removal of corrosion products.
- With a condenser tube leak of 0.001 gpm CPS is designed to assist normal continuous plant operation until repairs can be made.
- With a condenser tube “faulted” leak of 0.1 gpm, the CPS is designed to maintain plant operation until an orderly shutdown is achieved.
- The CPS is in a side stream arrangement, and processes one-third of the rated condensate flow during start up and clean up (impurities removal) of condensate .

10.4.6.2 System Description

10.4.6.2.1 General Description

The CPS is designed with prefilters to remove corrosion products and with deep bed mixed resin vessels (demineralizers) to remove ionic impurities from the condensate during plant startup, hot standby, shutdown operations, and power operation.

Condensate polishing vessels and prefilters are installed in the 2nd floor of T/B.

The condensate bypass valve is located in the condensate pump discharge header to bypass condensate polishing vessels. The flow rates to condensate polishing vessel are controlled by the condensate bypass valve according to the requirements of the CPS.

The condensate polishing system is shown in Figure 10.4.6-1.

The requirements for the condensate purity of the CPS effluent are determined to satisfy secondary side water chemistry guidelines for feedwater as described in Subsection 10.3.5.

10.4.6.2.2 Component Description

The major components of the condensate polishing system are described below.

Condensate Prefilters and Polishing Vessels

Three condensate prefilters are provided in the CPS to remove corrosion products from the condensate feed to the polishing vessels. Three deep bed mixed resin (anion and cation resins) condensate polishing vessels (demineralizers) are included in the CPS. One prefilter is dedicated for each polishing vessel. Prefilters and polisher vessels are constructed of carbon steel with a protective rubber lining on the inside of the vessel.

Resin Traps

Three resin traps are in the CPS. Each trap is located after a polisher vessel on the effluent piping side. The resin trap is monitored for high differential pressure, and an alarm indicates the need to backwash the trap.

Spent Resin Holding Vessel

One spent resin holding vessel is in the CPS. It is used for storage of exhausted or spent resin prior to shipping offsite for regeneration. The spent resin tank is constructed of carbon steel with an interior protective rubber lining.

Resin Mixing and Holding Vessel

One fresh resin mixing and holding vessel is in the CPS. It is used for mixing and storage of fresh mixed anion and cation resins for charging to the condensate polishing vessels. The fresh resin mixing and holding vessel is constructed of carbon steel with an interior protective rubber lining.

Portable Resin Addition Hopper and Eductor

Fresh resin is added to the resin mixing and holding vessel from a portable resin addition system consisting of a hopper and an eductor with associated piping and valves. The hopper is constructed of carbon steel. The eductor uses demineralized water to transfer the resin to the vessel.

10.4.6.2.3 System Operation

10.4.6.2.3.1 Normal Operation

The condensate polishing system cleans up all of the condensate inventory before the plant startup. During this operation, the maximum condensate flow through the CPS is one-third of the rated condensate flow. The condensate flow rate through the CPS during plant startup is one third of the rated condensate flow. The duration of the plant startup is shortened by utilization of the CPS.

The condensate polishing system is completely bypassed during normal power operation. If the secondary side water quality cannot be met with the maximum flow of the steam generator blow down, up to 33% of the rated condensate flow is processed through the CPS until normal water chemistry is restored.

Spent resin is removed from the polishing vessel and replaced with fresh resin. Resin replacement requires the polisher vessel to be taken out of service. Spent resin is transferred hydro pneumatically to the spent resin holding vessel until it can be removed to offsite for regeneration. Spent resin is normally non-radioactive and does not require any special packaging or handling. In the event of radioactive contamination of the resin in a vessel, temporary shielding is installed if required. Radioactive resin is transferred from the spent resin holding tank to the radwaste treatment area for waste management.

10.4.6.2.3.2 Condenser Tube Leak

The CPS goes into service if a main condenser tube leak occurs. The CPS is capable of maintaining the condensate water quality until an orderly shutdown is achieved as long as 0.1 gpm of cooling water comes into the condenser even in the high AVT operation. High AVT operation is changed to normal AVT operation when the CPS is in service.

10.4.6.3 Safety Evaluation

The CPS does not serve any safety-related function, and, thus, requires no safety evaluation.

10.4.6.4 Tests and Inspections

Testing and inspection of the CPS is performed prior to plant operation to verify proper functioning of the equipment and instrumentation in accordance with Chapter 14 requirements.

10.4.6.5 Instrumentation Applications

The affected polisher with its associated prefilter and resin trap train is removed from service when: (1) a high differential pressure exists across the polisher vessel, (2) the ion exchange capacity is exhausted as evidenced by a high effluent conductivity and high sodium, chloride or silica level in the effluent, or (3) at the completion of a pre-determined volume throughput.

The resin trap is monitored for high differential pressure, and an alarm indicates the need to backwash the trap.

The differential pressure across each of the three prefilters are measured and transmitted to the indication in the main control room. The affected prefilter with its associated polisher vessel and resin trap train are removed from service when a high differential pressure exists across the prefilter.

The differential pressure across the CPS influent and effluent main header piping is measured and transmitted to the indication in the main control room.

When the condensate polisher is in service, this differential pressure instrumentation provides an indication of the overall pressure drop through the CPS, and a control signal to the condensate polisher bypass valve which maintains sufficient flow through the CPS for optimum performance. The CPS is removed from service by the operator: (1) during

power operation with normal secondary water chemistry, or (2) at the completion of start up, clean up or other modes of operation.

The resin mixing and holding vessel level and the spent resin holding vessel level are measured and indicated locally and in the main control room. On high-level alarm, influent line valves are closed automatically to prevent overflow.

Table 10.4.6-1 Condensate Polishing System Design Parameters (Sheet 1 of 2)

Condensate polishing vessels

Number of vessels	3
Type	Vertical
Design flow rate per vessel (gpm)	3,750
Maximum short term flow rate per vessel (gpm)	7,500 (Maximum flow occurs only for a short duration during the condenser tube leak operating period)
Materials of construction	Carbon steel with rubber lining

Prefilters

Number of vessels	3
Type	Non precoat type cartridge filters
Design flow rate per filter (gpm)	3,750
Maximum short term flow rate per filter (gpm)	7,500 (Maximum flow occurs only for a short duration during the condenser tube leak operating period)
Materials of construction	Carbon steel with rubber lining

Table 10.4.6-1 Condensate Polishing System Design Parameters (Sheet 2 of 2)

Resin traps

Number of traps	3
Type	Basket
Materials of construction	Carbon steel with stainless steel strainer

Spent resin holding vessel

Number of vessels	1
Type	Vertical
Materials of construction	Carbon steel with rubber lining

Resin Mixing and Holding Vessel

Number of vessel	1
Type	Vertical
Materials of construction	Carbon steel with rubber lining

Table 10.4.6-2 Deleted

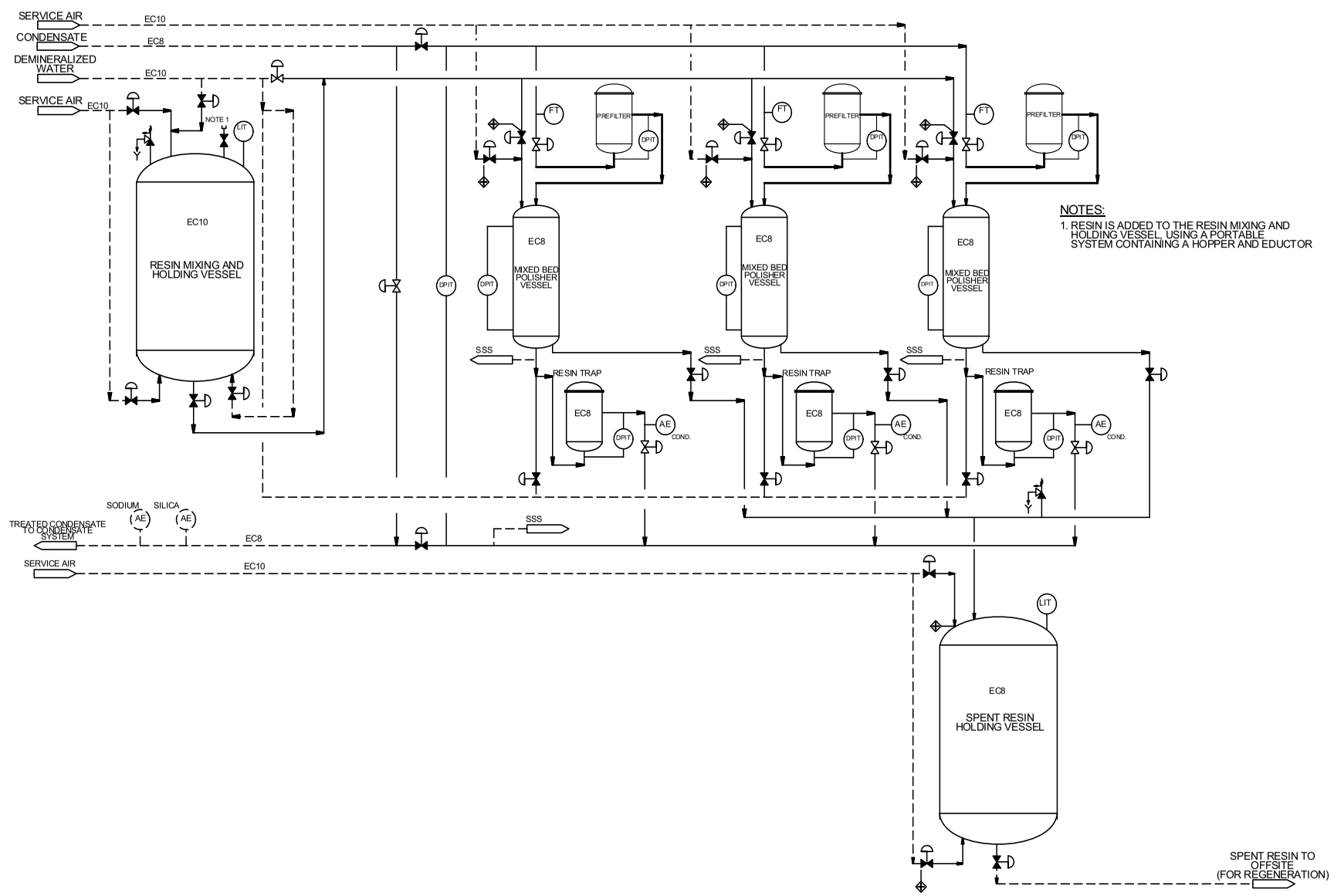

Figure 10.4.6-1 Condensate Polishing System Piping and Instrumentation Diagram

10.4.7 Condensate and Feedwater System

The condensate and feedwater system (CFS) provides feedwater at the required temperature, pressure, and flow rate to the steam generators (SG). The condensate system (CDS) runs from the condenser hotwell outlet to the deaerator; and the feedwater system (FWS) runs from the outlet of the deaerator to the SG nozzles. Condensate is pumped from the main condenser hotwell by the condensate pumps, passes through the condensate polishing system (CPS), gland steam condenser, and low-pressure feedwater heaters to the deaerator. The feedwater booster/main feedwater pumps take suction from the deaerator, and then pumps the feedwater through the high-pressure feedwater heaters to the SGs.

The CFS provides condensate cleanup capability and maintains condensate quality through dearation and interfacing with the main condenser, CPS, secondary side chemical injection system (SCIS) and secondary sampling system (SSS).

10.4.7.1 Design Bases

10.4.7.1.1 Codes and Standards

Equipment classification and applicable codes and standards for the CFS are described in Section 3.2.

10.4.7.1.2 Safety Design Basis

The safety-related portion of the system is required to function following a design-basis accident (DBA) to provide containment and feedwater isolation, as discussed below, for the main lines routed into containment.

The portion of the FWS from the SG inlets outward through the containment up to and including the main feedwater isolation valve(s) (MFIVs) is constructed in accordance with the requirements of ASME Code, Section III (Reference 10.4-8) Class 2 components and is designed to seismic category I requirements. The piping upstream of MFIV(s) to the first piping restraint at the interface between the reactor building (main steam/feedwater piping area) and turbine building is constructed in accordance with the requirements of ASME Code, Section III (Reference 10.4-8) Class 3 components and is designed to seismic category I requirements.

The US-APWR equipment class conforms to the provisions of Regulatory Guide 1.29 (Reference 10.4-9), “Seismic Design Classification”, and is shown in Section 3.2.

The piping upstream of the first pipe restraint at the interface between the reactor building (main steam/feedwater piping area) and turbine building is constructed in accordance with the requirements of ASME B31.1 (Reference 10.4-3) and non-seismic requirements.

Figures 10.4.7-1 through 10.4.7-4 show the equipment classification for the CFS.

The system provides the MFIVs operated by a separate solenoid valves with redundancy and different class 1E power bus for the main feedwater lines routed into the containment.

The isolation valves close after receipt of an isolation signal to limit the mass and energy release to containment consistent with the containment analysis presented in Chapter 6.

The safety-related portions of the FWS are designed to remain functional during and after a safe-shutdown earthquake (SSE) and to perform their intended function of isolating feedwater flow following postulated events.

Conformance to GDC 2 (Reference 10.4-1) assures that the SSC of the CFS can withstand the effects of natural phenomena, hence guaranteeing the capability of the system to perform its safety functions. The safety-related portions are protected from the effects of wind and tornado as described in Section 3.3; flood protection as described in Section 3.4; and seismic events as described in Section 3.7.

Conformance to GDC 4 (Reference 10.4-1) assures that the safety-related SSC of CFS are resistant to the effects of the environmental conditions associated with normal operation, maintenance, testing, and postulated accidents, including LOCAs. The design includes suitable protection so that dynamic effects, including internally generated missiles, pipe whipping, and discharging fluids due to equipment malfunctions; and external events do not pose a threat to system integrity. The safety-related portions are protected from missile protection as described in Section 3.5; protection against dynamic effects associated with the postulated rupture of piping as described in Section 3.6; and environmental design as described in Section 3.11.

In conformance with GDC 5 (Reference 10.4-1), no equipment the CFS is shared between safety-related units to preclude consequential effects of malfunctioning components within the system.

In conformance with GDC 44 (Reference 10.4-1), the CFS has sufficient redundancy for heat removal in conjunction with MSS, and is designed to permit appropriate periodic inspection of important components for conformance to GDC 45 (Reference 10.4-1).

In conformance with GDC 46 (Reference 10.4-1), the CFS is designed to permit appropriate functional testing of the system and components to ensure structural integrity and leak-tightnes.

The FWS' intended safety functions can be performed, assuming a single active component failure coincident with the loss of offsite power.

The portion of the FWS to be constructed in accordance with ASME Code, Section III (Reference 10.4-8), Class 2 requirements allows access to welds and uses removable insulation for inservice inspection, in accordance with ASME Code, Section XI (Reference 10.4-12). The portion of the FWS to be constructed in accordance with ASME Code, Section III (Reference 10.4-8), Class 3 requirements is also designed and configured to accommodate inservice inspection in accordance with ASME Code, Section XI (Reference 10.4-12).

The control functions and power supplies are described in Chapters 7 and 8, respectively.

For a feedwater line break (FLB) or main steam line break (MSLB), the FWS is designed to limit high energy fluid from the break. A high energy line break for piping is discussed in Section 3.6.

For a FLB upstream of the MFIV, the FWS is designed to prevent blowdown of any SG and also to maintain the emergency feedwater system (EFWS) in-flow to the SG.

The main feedwater check valve (MFCV), located between the MFIV and main feedwater regulationvalve (MFRV) in the main feedwater line to each SG, acts on reverse pressure differential. The MFCV is designed to withstand the forces encountered when closing after a FLB. The valves serve to prevent blowdown from more than one SG during a feedwater line break. During upset or abnormal conditions, the function of these check valves is to prevent reverse flow from the SGs whenever the FWS is not in operation.

Main feedwater isolation is provided via the MFIVs. These valves are operated by separate solenoid valves with redundancy and independent class 1E power bus. The failure of one solenoid valve does not impair the isolation function of MFIV. MFIVs are designed to close automatically on main feedwater isolation signals within 5 seconds, an appropriate ECCS actuation signal, within the time established in Section 16.1.

10.4.7.1.3 Power Generation Design Basis

- The CFS is designed with the capability of automatically providing the required flow to the SGs during startup, shutdown, at power levels up to the rated power and during the plant design transients without interruption of operation or damage to equipment.
- Feedwater of uniform temperature is delivered to all SGs at any given power level. A continuous, steady feedwater flow is maintained at all loads.
- The system is able to accommodate ten percent step or five percent per minute ramp load changes without significant deviation from programmed water levels in the SGs or major effect on the feedwater system.
- The system has the capability of accommodating the necessary changes in feedwater flow to the SGs with the steam pressure increase resulting from a 100-percent load rejection.
- The plant is designed to operate at rated power with one condensate pump or feedwater booster/main feedwater pump assembly out of service
- With one feedwater heater string out of service, the plant is designed for operation at 70 percent of rated power.
- The feedwater and condensate pumps and pump control system are designed so that loss of one feedwater booster/main feedwater pump assembly or one condensate pump does not result in trip of the turbine-generator or reactor.

- The pumps and other system components are designed to avoid the need for an immediate trip of the condensate, feedwater booster/main feedwater pumps on low net positive suction heads.
- Sufficient condensate and feedwater storage capacity is maintained in the system to accommodate the mass transfer of fluid arising from the thermal and pressure effects.

10.4.7.2 System Description

10.4.7.2.1 General Description

The CFS is shown schematically in Figures 10.4.7-1 through 4.

The CFS supplies the SGs with heated feedwater in a closed steam cycle using regenerative feedwater heating. The CFS is composed of the CDS and the FWS.

The CDS takes suction from the main condenser hotwell and pumps condensate forward to the deaerator utilizing condensate pumps. The FWS takes suction from the deaerator and pumps feedwater forward to the SGs utilizing feedwater booster/main feedwater pumps. The FWS contains the safety-related piping and valves that deliver feedwater to the SGs. The CFS is located within the turbine building, and the safety-related portion of the FWS is located within the reactor building and inside the containment.

The main portion of the condensate flow originates from the main condenser, pumped from the main condenser hotwell by the three 50% condensate pumps. The main condenser hotwell receives makeup from the condensate storage tank (refer to Subsection 9.2.6 for a description of the condensate storage facilities). The condensate passes in sequence through the CPS or condensate polishing bypass (described in Subsection 10.4.6); the gland steam condenser; and three strings of low-pressure feedwater heaters, each string consisting of low-pressure feedwater heaters No.1, No.2, No.3 and No.4. The condensate is delivered to a deaerator. Heater drainage from the low-pressure feedwater heaters No.2, No.3 and No.4 are cascaded back to the low-pressure feedwater heater No.1 and pumped forward by the low-pressure heater drain pump to the main condensate line between low-pressure heater No.1 and No.2. A portion of the condensate flow downstream of the CPS is diverted to provide cooling to the SG blowdown system regenerative heat exchangers before returning to the main condensate flow at the deaerator.

The CDS consists of the main condenser (described in Subsection 10.4.1), CPS (described in Subsection 10.4.6), condensate pumps, five-stage low-pressure heaters including the deaerating feedwater heater (deaerator), piping, associated valves and instrumentation.

Four 33% parallel feedwater booster/main feedwater pumps take suction from the deaerator, delivers feedwater through two strings of high-pressure heaters No.6 and No.7. Feedwater is then pumped to the four SGs through the pipe containing flow elements, MFRVs, MFIVs, and MFCVs.

Drainage from the moisture separator/reheaters cascade into the high-pressure feedwater heaters No.6 and No.7, and then flow into the deaerator. This drainage is pumped forward in the feedwater cycle.

During plant startup, three recirculation paths facilitate system cleanup and adjustment of water quality prior to initiating feed to the SGs. These cleanup loops are designed for approximately 33% of design condensate flow and include:

i. hotwell recirculation loop

ii. deaerator recirculation loop

iii. long cycle recirculation loop from each main feedwater line between the MFIV and MFCV

Steam is provided to the deaerating feedwater heater from the auxiliary steam supply system to preheat the feedwater to over 230°F during the initial cleanup and startup recirculation operations. This preheating action, along with chemical addition, minimizes the formation of iron oxides in the CDS.

The CFS interacts with the condensate storage tank of the condensate storage facilities to maintain the required plant secondary cycle inventory. The CFS accommodates the expansions and contractions in fluid volume that occur due to temperature changes of condensate, feedwater and heater drains. Fluid volume changes also occur due to void fraction effects (shrink and swell) in the SGs. The CFS responds to these types of transients, and also compensates for loss of fluid in the plant secondary cycle. The condensate storage facilities is described in Subsection 9.2.6.

The condensate quality is described in Subsection 10.3.5. The condensate quality is maintained by the main condenser, CPS, SCIS, SSS and deaerator.

The SCIS injects both an oxygen scavenging agent and a pH control agent into condensate piping downstream of the CPS and deaerator. The SCIS is described in Subsection 10.4.10.

Condensate sampling capability is provided at several locations within the CFS to monitor condensate quality and aid in diagnosing malfunctions. Secondary sampling is described in Subsection 9.3.2.

Three 50% capacity condensate pumps, connected in parallel, supply condensate flow. During rated power operation, two pumps are operating; the third pump is on standby available for automatic start.

All feedwater booster/main feedwater pumps are operated during rated power operation. Each pump is designed to deliver 25% rated feedwater flow during rated operation. With an increase in pump speed, each pump is also capable of delivering 33% rated feedwater flow at rated operating pressure

The source of SG water filling is from the deaerator by the feedwater booster/main feedwater pumps. The flow path is the same as main feedwater flow path up to a point on the main feedwater pump discharge header. From this point, startup feedwater flows out of the turbine building through a single common line, called the SG water filling line. The flow then splits into four individual lines and joins into each main feedwater line downstream of the main feedwater bypass regulation valve (MFBRV). The SG water filling lines have a common flow measuring element, a steam generator water filling control valve (SGWFCV).

10.4.7.2.2 Component Description

Piping:

The portion of the FWS from the SG inlets outward through the containment up to and including the MFIVs are constructed in accordance with the requirements of ASME Code, Section III (Reference 10.4-8) for Class 2 components and is designed to seismic category I requirements.

The portion of the FWS piping from upstream of the MFIVs to the first piping restraint at the interface between the reactor building (main steam/feedwater piping area) and turbine building is constructed in accordance with the requirements of ASME Code, Section III (Reference 10.4-8) for Class 3 components and is designed to seismic category I requirements. This portion of the piping includes MFRVs, MFBRVs, SGWFCVs and MFCV.

The piping upstream of the first pipe restraint at the interface between the reactor building (main steam/feedwater piping area) and turbine building is constructed in accordance with the requirements of ASME B31.1 (Reference 10.4-3) and non-seismic category.

Four 18 inch main feedwater lines are installed between the main feedwater header downstream of the high-pressure feedwater heater and the MFIV. Main feedwater piping between the MFIV and SG is 16 inch in diameter.

The FWS piping material is as follows:

Safety-related portion: ASME SA-335, Grade P22, Seamless.

Other FWS materials are covered in Subsection 10.3.6.

Main Feedwater Isolation Valves:

The MFIVs are seismic Category I, ASME Code, Section III (Reference 10.4-8), Class 2 valves. One MFIV is installed in each of the four (16 inch) main feedwater lines outside the containment and downstream of the MFCV.

The MFIV provides the following functions:

- main feedwater isolation

- containment isolation

Each MFIV is a system medium actuated valve which uses valve inside pressure composed of a valve body that is welded into the system pipeline. MFIV is operated by a separate solenoid valves with redundancy and different Class 1E power bus.

MFIV is designed to be capable trip-closed within 5 seconds after receiving signals, such as ECCS actuation signal or high-high SG water level signal in any one of the SGs.

Redundant control and indication channels are provided for each of the isolation valves. Provisions are made for inservice inspection of the isolation valves.

Main Feedwater Regulation Valves:

The MFRVs are air-operated 16 inch size control valves with the purpose of controlling feedwater flow rate. The MFRV are designed to ASME Code Section III, Class 3 and seismic category I. The valve body is a globe design. Seats and trim are of an erosion resistant material. The design allows for removal and replacement of seats and other wearing parts. The MFRVs automatically maintain the water level in the SGs during operational modes. Positioning of the MFRV during normal operation is the function of an automatic SG water level control using a conventional three-element control scheme (feedwater flow, steam flow, SG water level).

MFRV is designed to close within 5 seconds after receiving signals, such as an ECCS actuation signal, high-high SG water level signal, P-4 & low Tavg signal and high SG water level signal. Details of the three element control system are provided in Chapter 7.

Main Feedwater Check Valves:

Each main feedwater line includes the MFCV (18 inch size) installed outside containment. The valves are designed to ASME Code, Section III, Class 3, seismic category I. During normal and upset conditions, the MFCV prevents reverse flow from the SG whenever the feedwater pumps are tripped. In addition, the closure of the valves prevents more than one SG from blowing down in the event of a feedwater line break. The MFCV is designed to limit blowdown from the SG and to prevent water hammer due to sudden valve closure.

Main Feedwater Bypass Regulation Valves:

MFBRVs (6 inch size) are designed to ASME Code Section III, Class 3, seismic category I. MFBRVs are installed to bypass the MFRVs, and are utilized to adjust the main feedwater flow from approximately 3% up to 15% rated power. The main feedwater bypass control system is 3-element (feedwater flow, ΔT, SG water level) type control system.

The MFBRV is designed to close within 5 seconds after receiving signals, such as a ECCS actuation signal, a high-high SG water level signal and high SG water level signal.

Steam Generator Water Filling Control Valves:

SGWFCV is used from no load up to 3% by one element (SG water level only) controller. Details of the control are provided in Section 7.7.

SGWFCV is designed to close within 5 seconds after receiving signals, such as a ECCS actuation signal, or, a high-high SG water level.

Main Condenser:

See Subsection 10.4.1

Condensate Pumps:

Three 50%, vertical, multistage, centrifugal condensate pumps are motor-driven and operate in parallel. The valve arrangement allows individual pumps to be removed from service. Pump capacity meets the rated power requirements with two of the three pumps in operation.

Condensate Regulating Valves:

The main condensate flow to the deaerator is regulated by two parallel, split-ranged, pneumatically operated control valves. Condensate is regulated to maintain the level in the deaerator storage tank. During startup and low loads, the smaller valve modulates to control flow while the larger valve remains closed. As load increases, the larger valve modulates to control flow.

Low-Pressure Feedwater Heaters:

The low-pressure feedwater heaters are shell and tube heat exchangers with the heated condensate flowing through the tube side and the extraction steam condensing on the shell side. Parallel strings of low-pressure feedwater heaters No.1, No.2, No.3 and No.4 are all located in each of three main condenser necks. Except for the No.1 low-pressure feedwater heaters, the low-pressure feedwater heaters have integral drain coolers, and their shell side drains cascade to the next lower stage feedwater heater. The drainage from the No.1 heaters flow to their respective low-pressure feedwater heater drain tank. The drainage from each low-pressure feedwater heater drain tank is pumped by the low-pressure feedwater heater drain pump up to its associated condensate line between the No.1 and No.2 heaters.

A drain line from each low-pressure feedwater heater allows direct discharge of the heater drainage to the main condenser in the event the normal drainage path is not available or flooding occurs in the heater. The low-pressure feedwater heater shells are carbon steel, and the tubes are stainless steel.

Deaerator:

The deaerator is a spray tray type, horizontal shell, direct contact heater located on top of a horizontal storage tank. Internal components of the deaerator include a tray stack and

spray valves. Condensate enters the deaerator from the top and is sprayed through the spray valves into a spray chamber. Heating steam flows from the bottom up through the trays and into the spray chamber. The heating steam is condensed and raises the temperature of the condensate to near saturation, liberating dissolved gases from the condensate. The condensate then cascades through the tray section, exposing a large surface area of condensate to the scrubbing action of the countercurrent rising steam. Condensate drains from the deaerator through downcomers into the storage tank. Noncondensables are vented from the top of the deaerator and flow through an orifice and valve assembly to the main condenser.

During start up, auxiliary steam from the auxiliary steam supply system (see Subsection 10.4.11) is supplied to the deaerator during recirculation conditions and maintains the pressure in the tank above atmospheric. The steam heats the condensate during cleanup and recirculation for liberation of noncondensables. Auxiliary steam is also automatically supplied to the deaerator following a turbine trip to assist in maintaining deaerator pressure above atmospheric. The shells of the deaerator and the deaerator storage tank are carbon steel. Most of the internals of the deaerator, including the tray assemblies and spray valves, are stainless steel. A high level dump line and control valve provide overflow protection to the deaerator storage tank. Water from the deaerator storage tank is drained to the main condenser during high level conditions.

High-Pressure Feedwater Heaters:

The main feedwater pumps discharge into a parallel string of high-pressure feedwater heaters No.6 and No.7. These heaters are shell and tube heat exchangers with integral drain coolers. Heated feedwater flows through the tubes and extraction steam condenses in the shell. Each high-pressure feedwater heater No.7 drains into its associated high-pressure feedwater heater No.6, and the high-pressure feedwater heater No.6 drains into its low-pressure heater No. 5 (deaerator).

A drain line from each heater allows direct discharge of the heater drainage to the main condenser in the event the normal drain path is not available or flooding occurs in the heater. The high-pressure feedwater heater shells are carbon steel, and the tubes are stainless steel.

Feedwater Booster Pumps:

Four 33% feedwater booster pumps are horizontal, centrifugal pumps with identical characteristics, located upstream of the main feedwater pumps. Each feedwater booster pump takes suction from the deaerator storage tank and pumps forward to its associated main feedwater pump. An electric motor drives both the booster pump and the main feedwater pump. The feedwater booster pump is driven by one end of the motor shaft and the main feedwater pump is driven by the other end through a hydro-coupling. The feedwater booster pump, operating at a lower speed than the main feedwater pump, boosts the pressure of feedwater from the deaerator to meet the net positive suction head requirements of the main feedwater pump.

Main Feedwater Pumps:

Four 33% main feedwater pumps operate in parallel and take suction from the associated feedwater booster pumps. The combined discharge from the main feedwater pumps is supplied to the high-pressure feedwater heaters and then to the SGs. Each main feedwater pump is a horizontal, centrifugal pump with identical characteristics, driven through a hydro-coupling by the motor that drives the associated feedwater booster pump.

Isolation valves allow each of the feedwater booster/main feedwater pumps to be individually removed from service while continuing power operations at reduced capacity.

Low-Pressure Feedwater Heater Drain Pumps:

Three 33% low-pressure heater drain pumps are vertical, turbine, multistage pumps. Each pump takes suction from its associated low-pressure feedwater heater drain tank and pumps up the drainage from the tank to its associated condensate line between low-pressure feedwater heaters No.1 and No.2.

Low-Pressure Feedwater Heater Drain Tank:

Three 33% low-pressure feedwater heater drain tanks are horizontal, cylindrical with a sufficient storage margin to accommodate system transients.

Pump Recirculation Systems:

Minimum flow control systems automatically protect the pumps in the CFS from pumping below the minimum flow rate to prevent pump damage. The condensate pumps recirculate to the main condenser. The feedwater booster/main feedwater pumps recirculate to the deaerator storage tank, and each low-pressure feedwater heater drain pump recirculates to its associated low-pressure feedwater heater drain tank.

10.4.7.2.3 System Operation

10.4.7.2.3.1 Plant Startup

During plant startup, the CFS operates in several different configurations. These are described in Subsections below.

Three recirculation loops are provided to allow for system cleanup and adjustment of water chemistry prior to initiating feed to the SG. These loops are called:

i. Hotwell recirculation loop

ii. Deaerator recirculation loop

iii. Long cycle recirculation loop.

Hotwell Recirculation:

The hotwell recirculation loop is provided to facilitate cleanup of the condensate inventory in the main condenser hotwell by the CPS described in Subsection 10.4.6. This loop recirculates condensate flow through the CPS from downstream of the gland steam condenser to the main condenser. With a condensate pump operating, hotwell recirculation is started by adjusting the recirculation flow control valve to the required flow rate and placing the CPS in service to achieve the required water quality.

This loop also serves the purpose of providing a minimum flow for operation of the gland steam condenser and the condensate pumps.

Deaerator Recirculation:

The deaerator recirculation loop is provided to facilitate cleanup of the condensate. This loop recirculates condensate flow through the CPS from downstream of the deaerator to the main condenser. Deaerator recirculation is started by adjusting the recirculation flow control valve to the required flow with the CPS in operation. Auxiliary steam can be admitted to the deaerator to heat the condensate for liberation of noncondensable gases.

This loop also serves as a high level dump path to provide overflow protection for the deaerator storage tank.

Long Cycle Recirculation:

Long cycle recirculation can begin when the condensate and feedwater has been sufficiently cleaned and deaerated at the feedwater booster/main feedwater pump suction. Flow is initiated by adjusting the recirculation flow control valve to achieve the required flow rate. Feedwater is recirculated from each main feedwater line between the MFIV and MFCV to the main condenser for cleanup and deaeration of the condensate and feedwater inventory.

10.4.7.2.3.2 Plant Heatup

The condenser hotwell makeup and overflow valves are enabled and function automatically during the plant heatup cycle to maintain condensate inventory. Condensate is returned to the condensate storage tank as volume expansion occurs, and makeup occurs as needed for system losses. During heatup, the main condenser is available to accept turbine bypass steam from the MSS, as well as various drains, vents, and condensate/feedwater recirculation flow. Noncondensable gases are removed in the air removal sections of the main condenser and through the deaerator vents. Control and monitoring of water quality and chemistry are accomplished by operation of the CPS, SCIS, and SSS as required.

The SGs are filled by a feedwater booster/main feedwater pump using water from the deaerator storage tank and supplied through the SG water filling line to the SGWFCV. The SGs are drained, as required, through the steam generator blowdown system.

During the initial stages of plant heatup, one condensate pump operates as necessary to maintain the level in the deaerator storage tank. One feedwater booster/main feedwater pump is in operation when feeding water to the SGs. The feedwater pumps in use operate on minimum flow recirculation, as necessary, while maintaining the water level of the SGs. Feedwater is controlled by the SGWFCVs which are operated either manually from the control room or automatically by one element control in accordance with the SG water level demand. Condensate flow to the SG blowdown heat exchangers is controlled during plant heatup to obtain the necessary cooling to the blowdown stream. Any excess level in the deaerator storage tank is automatically drained to the main condenser through the deaerator high level dump flow path.

When the startup preparation is completed, heatup of the reactor coolant system is initiated by the operation of the reactor coolant pump and the power activation of the pressurizer heater. Since the heating source capacity is small, the heat up rate is limited. In this case, the heating up is performed by keeping the MSIV closed to maintain the heat up rate is as large as possible, and maintains an appropriate balance between available heat source capacity and heat load during heat up. .

The amount of feedwater necessary to be provided the SG from the cold shutdown to no-load RCS temperature of 557°F is not large because water in the SG increases its volume gradually due to thermal expansion, and steam consumption is small in the pertinent period. The deaerator water is supplied via the SGWFCV by a feedwater booster/main feedwater pump.

When the no-load temperature is established, the FWS shall be in operation before the turbine reaches its synchronous speed.

10.4.7.2.3.3 Plant Shutdown

As power is decreased, the number of operating condensate and booster/main feedwater pumps are reduced. At low feedwater flow, control of the feedwater is transferred from the MFRVs to the MFBRVs (from 15% to 3% of the rated power) and SGWFCVs (less than 3% of the rated power). Decay heat and sensible heat is removed by steam release via the TBS to the condenser to cool the plant and bring it to RHR cut-in.

10.4.7.2.4 Normal Power Operation

One operating condensate pump supplies sufficient condensate flow to the deaerator during initial power operation and at low-power levels. As the power level increases, a second condensate pump is started before the approximately 50-percent rated power condensate flow of the first condensate pump is exceeded. The third condensate pump is in standby.

The condensate regulating valves to the deaerator automatically maintain the level of the deaerator storage tank. If condensate flow to the deaerator drops below the minimum required flow for operation of the gland steam condenser or the condensate pumps, the hotwell recirculation valve to the condenser opens to provide the minimum flow.

Noncondensables are removed by the deaerating section of the main condenser and by the deaerator. The CPS, SCIS and SSS are operated, as needed, to maintain water quality.

For normal operating conditions between 0 and 100% load, system operation is primarily automatic. Automatic level control systems control the water levels in the feedwater heaters and the condenser hotwell. Feedwater heater water levels are controlled by modulating the flow control valves. Level control valves in the makeup line to the condenser from the condensate storage tank and in the return line to the condensate storage tank control the level in the condenser hotwell.

The system is able to accommodate 10% step or 5% per minute ramp load changes without significant deviation from programmed water levels in the SGs or a major effect on the feed system.

The system has the capability of accommodating the necessary changes in feedwater flow to the SGs with the steam pressure increase resulting from a 100% load rejection.

Condensate flow is supplied for cooling the SG blowdown regenerative heat exchangers.

10.4.7.2.5 Emergency Operation

In the event of a design basis event, feedwater isolation signals are generated as required. The MFIVs, MFBRVs, MFRVs and SGWFCVs automatically close on receipt of the isolation signals. The CFS is not required to supply feedwater under accident conditions to effect plant shutdown or to mitigate the consequences of an accident. The SGs are fed with water by the EFWS (Subsection 10.4.9) and removes residual heat from the reactor coolant system by relieving steam through the main steam depressurization valves.

10.4.7.3 Safety Evaluation

The safety-related portions of the FWS are located in the containment and reactor building. These structures are designed to withstand the effects of earthquakes, tornadoes, hurricanes, floods, external missiles, and other natural phenomena. Sections 3.3, 3.4, 3.5, 3.7, and 3.8 provide the bases for the adequacy of the structural design of these structures.

The safety-related portions of the FWS are designed to remain functional after a design basis earthquake. Subsection 3.7.2 and Section 3.9 provide the design loading conditions that are considered. Sections 3.5, 3.6, and Subsection 9.5.1 describe the analyses that demonstrate that a safe shutdown, as outlined in Section 7.4, is achieved and maintained.

The FWS safety-related functions are accomplished by redundant means. A single, active component failure of the safety-related portion of the system does not compromise the safety function of the system. Table 10.4.7-3 provides a FMEA of the safety-related active components of the FWS.

Preoperational testing of the safety-related portion of the CFS is performed as described in Chapter 14. Periodic inservice functional testing is done in accordance with Subsection 3.9.6. Section 6.6 provides the ASME Code, Section XI (Reference 10.4-12) requirements that are appropriate for the FWS.

Section 3.2 delineates the quality group classification and seismic category applicable to the safety-related portion of this system and supporting systems. The controls and power supplies necessary for the safety-related functions of the CFS are Class 1E, and are described in Chapters 7 and 8.

For a FLB inside the containment or a MSLB, the MFIVs, MFRVs, MFBRVs and SGWFCVs automatically close upon receipt of a feedwater isolation signal. The signals that produce a feedwater isolation signal are identified and discussed in Section 7.3.

The MFIVs are provided with solenoid valves supplied by redundant power divisions. Failure of either of the power divisions does not prevent closure of the MFIV during an accident condition. Releases of radioactivity from the CFS, resulting from the main feedwater line break, are minimal because of the negligible amount of radioactivity in the system under normal operating conditions.

For a steam generator tube rupture (SGTR) event, feedwater isolation is provided for the main feedwater with isolation signals generated by the reactor protection system. Refer to Section 7.3 and Chapter 15 for details.

10.4.7.4 Inspection and Tests

10.4.7.4.1 Preoperational Testing

Preoperational testing of the CFS is performed as described in Chapter 14.

Valve Testing and Inspection

The MFIVs, MFRVs, MFBIVs, and SGWFCV, are tested to check closing time prior to startup.

System Testing

The CFS is designed to allow system operation testing for both normal and emergency operating modes. This includes testing of applicable protection system components.

The safety-related components of the system are designed and located to permit pre-service and in-service inspection.

Pipe Testing

The safety-related main feedwater piping within the containment and main steam/feedwater piping area are visually and volumetrically inspected at installation per ASME code Section XI (Reference 10.4-12) pre-service inspection requirements.

10.4.7.4.2 In-Service Testing

The structural leaktight integrity and the performance of the system components are demonstrated by operation. A description of periodic in-service inspection and in-service testing of ASME Code, Section III (Reference 10.4-8), Class 2 and 3 components is provided in Section 6.6 and Subsection 3.9.6.

10.4.7.5 Instrumentation Applications

The condensate and feedwater instrumentation is designed to facilitate automatic operation, remote control, and indication of system parameters.

a. Main feedwater temperature

   A temperature transmitter is installed in each main feedwater line.

b. Main feedwater pressure

   A pressure transmitter is installed in each main feedwater line.

c. Main feedwater header pressure

   The signal of the main feedwater header pressure is provided to the main feedwater control circuit. In addition, this signal is provided to the indications.

d. Steam generator water level

   One wide range water level gauge and four narrow range water level gauges are installed at the secondary side of each SG.

   The wide range water level signal is provided to the indication, and water level alarm.

   The narrow range water level signals are provided to the indication, and water level alarm.

e. Main feedwater flow rate

   A main feedwater flow transmitter is installed in each main feedwater line. The signals from each line are selected by the signal selector and are provided to the control circuit of the main feedwater control. In addition, these signals are provided to the indication.

The positioning of the main feedwater regulation valve during normal operation is a function of an automatic SG water level control using a refinement of a standard three element control scheme (feedwater flow, steam flow, SG water level). A flow venturi is located in each feedwater line to provide signals for the three element feedwater control system. Feedwater control is further described in Section 7.7.

The feedwater booster/main feedwater pumps are tripped by manual actuation or feedwater isolation signals as described in Section 7.3. A flow element in the discharge

piping from each feed water booster/main feedwater pump provides a flow signal for control of the associated minimum flow recirculation valve. Level transmitters, located at the deaerator storage tank, control the deaerator level. Condensate flow to the deaerator is regulated by two split ranged control valves upstream of the deaerator. During normal power generation, the valves are regulated by a three element control system; total feedwater flow is used as a feed forward demand signal, and the control is trimmed by measured feedback of total condensate flow and deaerator storage tank level.

In the event a feedwater heater experiences a sizable tube leak or a feedwater heater water level control valve fails closed, the main turbine is protected from failure due to flooding on the shell side of a feedwater heater and subsequent water induction into the moving turbine blades. This is accomplished by automatic closure of the isolation valve in the steam extraction line to that heater and opening the high-level dump control valve that dumps the heater excess drains to the condenser. For heaters that do not have extraction line isolation valves, condensate isolation valves are automatically closed to isolate condensate flow to the heater tubes.

The total water volume in the CFS is maintained through automatic makeup and rejection (from the condensate pump discharge) of condensate to the condensate storage tank. The system makeup and rejection are controlled by the condenser hotwell level controller. Level transmitters are provided at the condenser hotwell for use by the hotwell level controller.

The system water quality requirements are automatically maintained through the injection of an oxygen scavenging agent and a pH control agent into the CDS. The pH control agent and oxygen scavenging agent injection is controlled by pH and the level of oxygen scavenging agent residual in the system is continuously monitored by the SSS.

Instrumentation, including pressure indication, flow indication, and temperature indication, required for monitoring the system, are provided in the main control room.

10.4.7.6 Flow-Accelerated Corrosion

Refer to Subsection 10.3.6.3.

10.4.7.7 Water Hammer Prevention

Refer to Subsection 5.4.2.1.2.11 for a description of SG design features to prevent a fluid flow water hammer. The main feedwater connection on each of the SGs is the highest point of each feedwater line downstream of the MFIV. The feedwater lines contain no high-point pockets that could trap steam and lead to a water hammer. The horizontal pipe length from the main nozzle to the downward turning elbow of each SG is minimized.

The FWS and SG design minimize the potential for a water hammer and subsequent effects. Feedwater piping analysis considers the following factors and events in the evaluation:

- SGs with top feed ring design

- Rapid closure of the MFCV due to line breaks
- Spurious MFIV or MFRV trips
- Pump trips
- Deaerator regulating flow control valve trip
- Feedwater piping, anchors, supports, and snubbers, as applicable

Prevention and mitigation of a feedline-related water hammer is accomplished through operation of the feedwater delivery system. The design features avoids the formation of a steam pocket in the feedwater piping which, when collapsed, could create a hydraulic instability.

Water hammer prevention and mitigation are implemented in accordance with the following as specified in NUREG-0927 (Reference 10.4-10):

- Preventive design measures, i.e consideration of water draining prevention from the feed ring and minimization of the horizontal run of inlet piping to the SG, and testing against a water hammer for the SG feedwater ring are performed in accordance with BTP ASB10-2 (Reference 10.4-11).
- Adequate preventive design measures, i.e consideration of MFRV over sizing and instability, reduce the frequency and severity of a water hammer.
- Operator's caution, training, operational procedure and maintenance procedure (warm-up of line, adequate valve operation, vent/drain and removal of void, etc.) reduce the frequency and severity of a water hammer.
- As for a water hammer anticipated by intended system operation (or steam hammer), generated load is considered for piping and support designs.

Each main feedwater line includes the MFCV installed outside containment. During normal and upset conditions, the MFCV prevents reverse flow from the SG whenever the feedwater pumps are tripped. In addition, the closure of the valves prevents more than one SG from blowing down in the event of a feedwater pipe break. The MFCV is designed to limit blowdown from the SG and to prevent a slam resulting in potentially severe pressure surges due to a water hammer. The valves are designed to withstand the closure forces encountered during the normal, upset and faulted conditions. Rapid closure associated with a feedline break does not impose unacceptable loads on the SG.

The Combined License Applicant is to provide operating and maintenance procedures in accordance with NUREG-0927 and a milestone schedule for implementation of the procedure. The procedures should address:

- Prevention of rapid valve motion
- Introduction of voids into water-filled lines and components

- Proper filling and venting of water-filled lines and components
- Introduction of steam or heated water that can flash into water-filled lines and components
- Introduction of water into steam-filled lines or components
- Proper warmup of steam-filled lines
- Proper drainage of steam-filled lines
- The effects of valve alignments on line conditions.

Table 10.4.7-1 Major Valve Design Parameters

Main feedwater regulation valves

Number of valves	4 (one valve in each loop)
Design pressure (psig)	1,850
Design temperature (°F)	480
Valve size (inch)	16

Main feedwater bypass regulation valves

Number of valves	4 (one valve in each loop)
Design pressure (psig)	1,850
Design temperature (°F)	480
Valve size (inch)	6

Main feedwater isolation valves

Number of valves	4 (one valve in each loop)
Design pressure (psig)	1,850
Design temperature (°F)	568
Valve size (inch)	16

Main feedwater check valves

Number of valves	4 (one valve in each loop)
Design pressure (psig)	1,850
Design temperature (°F)	480
Valve size (inch)	18

Steam generator water filling control valves

Number of valves	4 (one valve in each loop)
Design pressure (psig)	1,850
Design temperature (°F)	375
Valve size (inch)	3

Table 10.4.7-2 Major Component Design Parameters (Sheet 1 of 2)

Condensate pump	
Number	3
Type	Vertical, multistage, centrifugal
Driver	Induction ac motor
Rated flow (gpm)	12,500
Rater head (ft)	1,000
Rated power (HP)	4,500
Feedwater booster pump	
Number	4
Type	Centrifugal, horizontal
Driver	Induction ac motor
	(Main feedwater pump common use)
Rated flow (gpm)	16,700
Rater head (ft)	2,820 (the sum total with main feedwater pump)
Rated power (HP)	14,700 (the sum total with main feedwater pump)
Main feedwater pump	
Number	4
Type	Centrifugal, horizontal
Driver	Induction ac motor
Variable speed unit	Hydro coupling unit
Rated flow (gpm)	16,700
Rater head (ft)	2,820 (the sum total with feedwater booster pump)
Rated power (HP)	14,700 (the sum total with feedwater booster pump)
Low-pressure feedwater heater No.1	
Number	3
Type	Horizontal, single zone, shell and U-tube
Material, shell	Carbon steel
Material, tubes	Stainless steel
Heat duty (Btu/hr)	7.4×10^8
Low-pressure feedwater heater No.2	
Number	3
Type	Horizontal, two zone, shell and U-tube with drain cooler
Material, shell	Carbon steel
Material, tubes	Stainless steel

Table 10.4.7-2 Major Component Design Parameters (Sheet 2 of 2)

Heat duty (Btu/hr)	4.4×10^8
Low-pressure feedwater heater No.3	
Number	3
Type	Horizontal, two zone, shell and U-tube with drain cooler
Material, shell	Carbon steel
Material, tubes	Stainless steel
Heat duty (Btu/hr)	4.4×10^8
Low-pressure feedwater heater No.4	
Number	3
Type	Horizontal, two zone, shell and U-tube with drain cooler
Material, shell	Carbon steel
Material, tube	Stainless steel
Heat duty (Btu/hr)	3.7×10^8
Low-pressure feedwater heater No.5 (Deaerator with a storage tank)	
Number	1
Type	Horizontal, spray and tray type
Dissolved oxygen at exit (ppb)	5 or less
Material, shell	Carbon steel
High-pressure feedwater heater No.6	
Number	2
Type	Horizontal, two zone, shell and U-tube with drain cooler
Material, shell	Carbon steel
Material, tubes	Stainless steel
Heat duty (Btu/hr)	1.1×10^9
High-pressure feedwater heater No.7	
Number	2
Type	Horizontal, two zone, shell and U-tube with drain cooler
Material, shell	Carbon steel
Material, tubes	Stainless steel
Heat duty (Btu/hr)	1.1×10^9

Table 10.4.7-3 Condensate and Feedwater System Failure Modes and Effects Analysis

	Component	Failure Mode	Plant Condition	Effect on System Operation	Failure Detection
1.	Main Feedwater Isolation Valve (MFIV) FWS-SMV-512A,B,C,D normally open	Fails closed or fails to open on demand.	During power operation	No safety-related effect causes since: No adverse effect on integrities of the reactor or RCPB. Plant can remain in hot standby condition or go to cold shutdown condition.	Valve position Indication on the main control room
		Solenoid valve for actuating MFIV fails to open on demand.	Excessive Feedwater Flow Steam System Piping Failure Steam Generator Tube Rupture Loss of Coolant Accident	No safety-related effect causes since: Main Feedwater Isolation Valve is operated by a separate solenoid valves with redundancy and different class 1E power bus. Failure of either train of solenoid valves does not impair isolation function of Main Feedwater Isolation Valve.	Valve testing Valve testing is done in accordance with the Inservice Testing Program. If there are any problems with the solenoid valve, the failure is detected during the testig.
2.	Main Feedwater Regulation Valve (MFRV) FWS-FCV-510,520,530 ,540 Normally adjusted to open	Fails open fully on demand	During power operation	No safety-related effect causes since: No adverse effect on integrities of the reactor or RCPB. Plant can remain in hot standby condition or go to cold shutdown condition.	Valve position Indication on the main control room

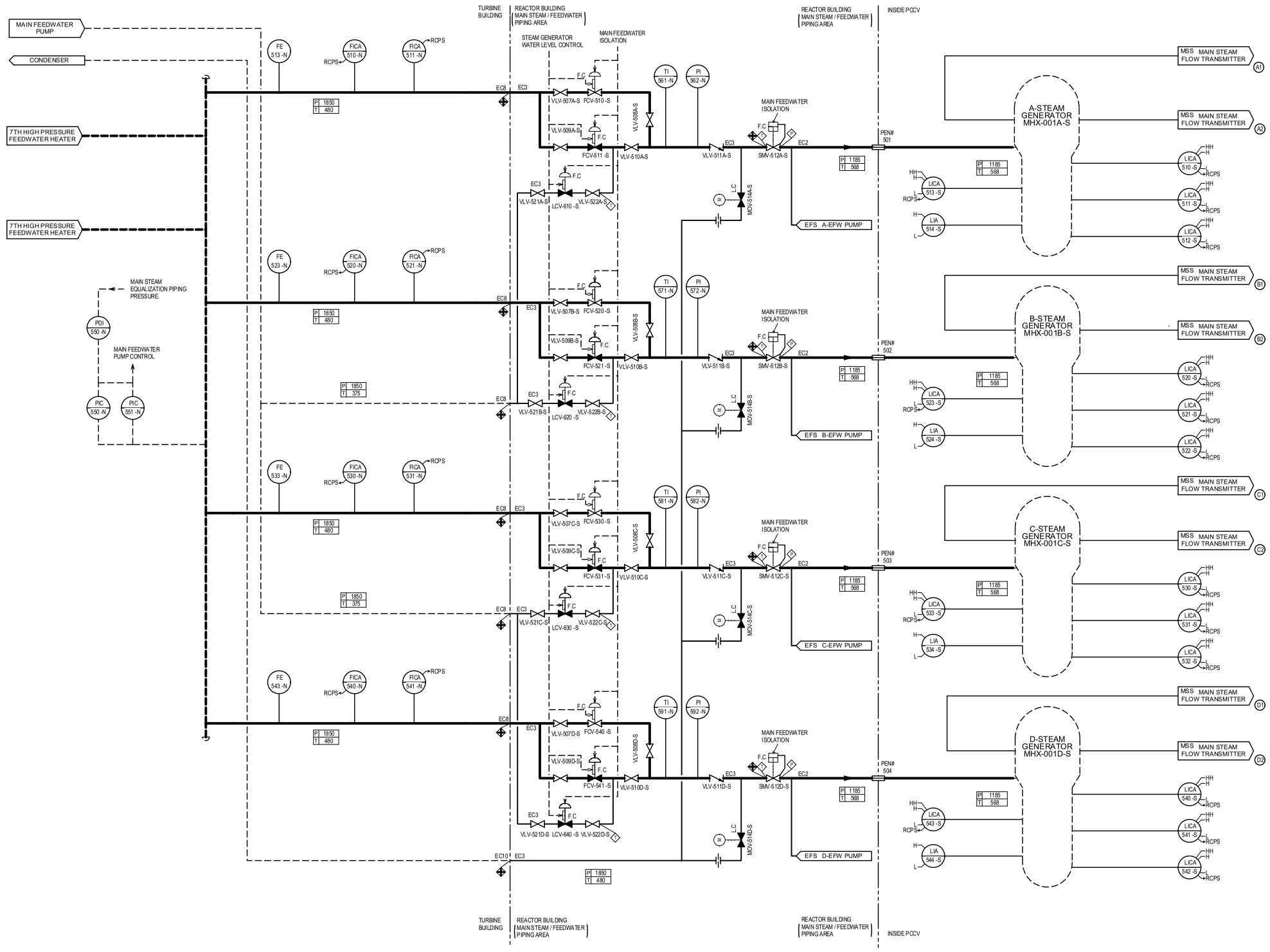

Figure 10.4.7-1 Condensate and Feedwater System Piping and Instrumentation Diagram (1/4)

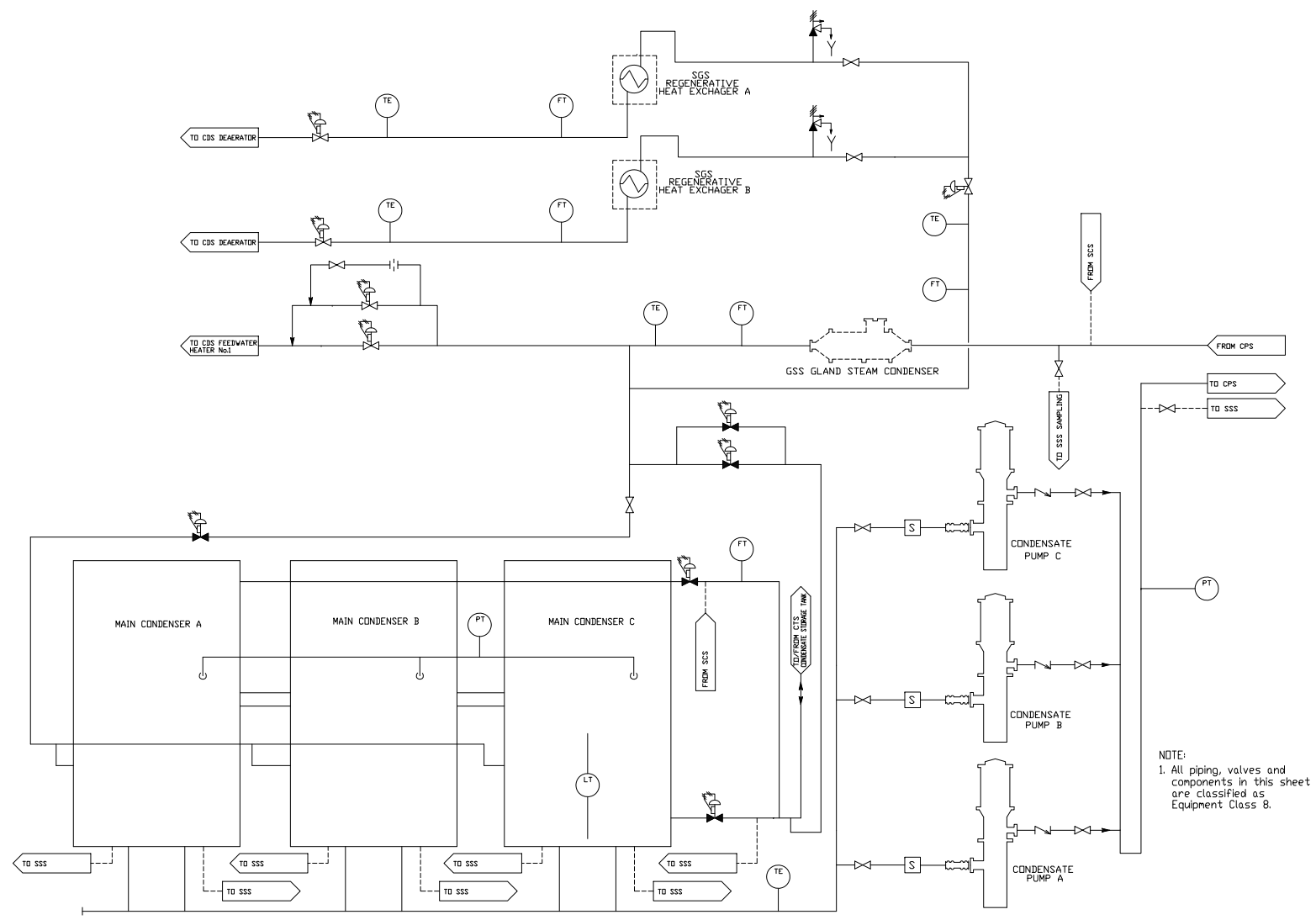

Figure 10.4.7-2 Condensate and Feedwater System Piping and Instrumentation Diagram (2/4)

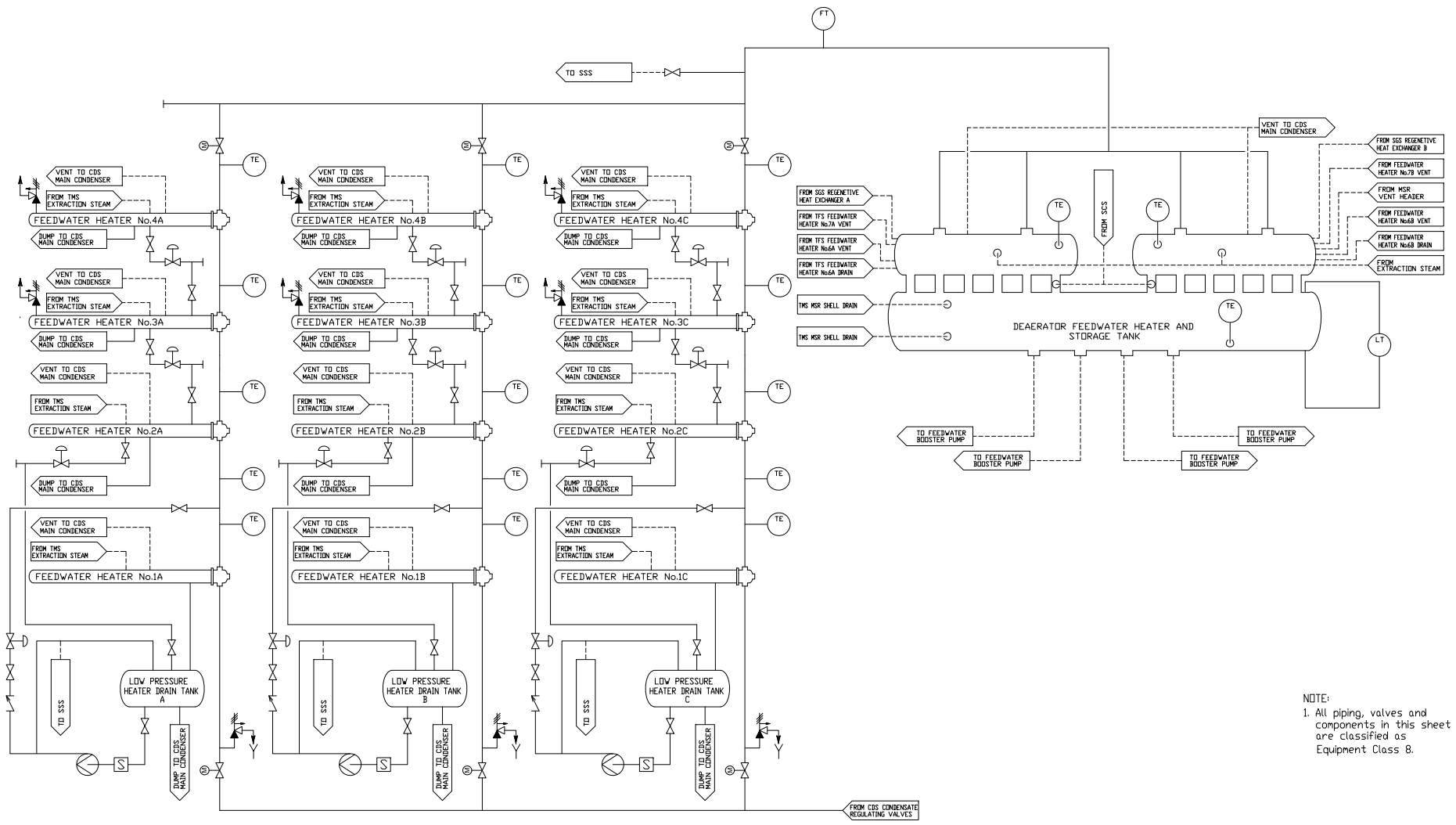

Figure 10.4.7-3 Condensate and Feedwater System Piping and Instrumentation Diagram (3/4)

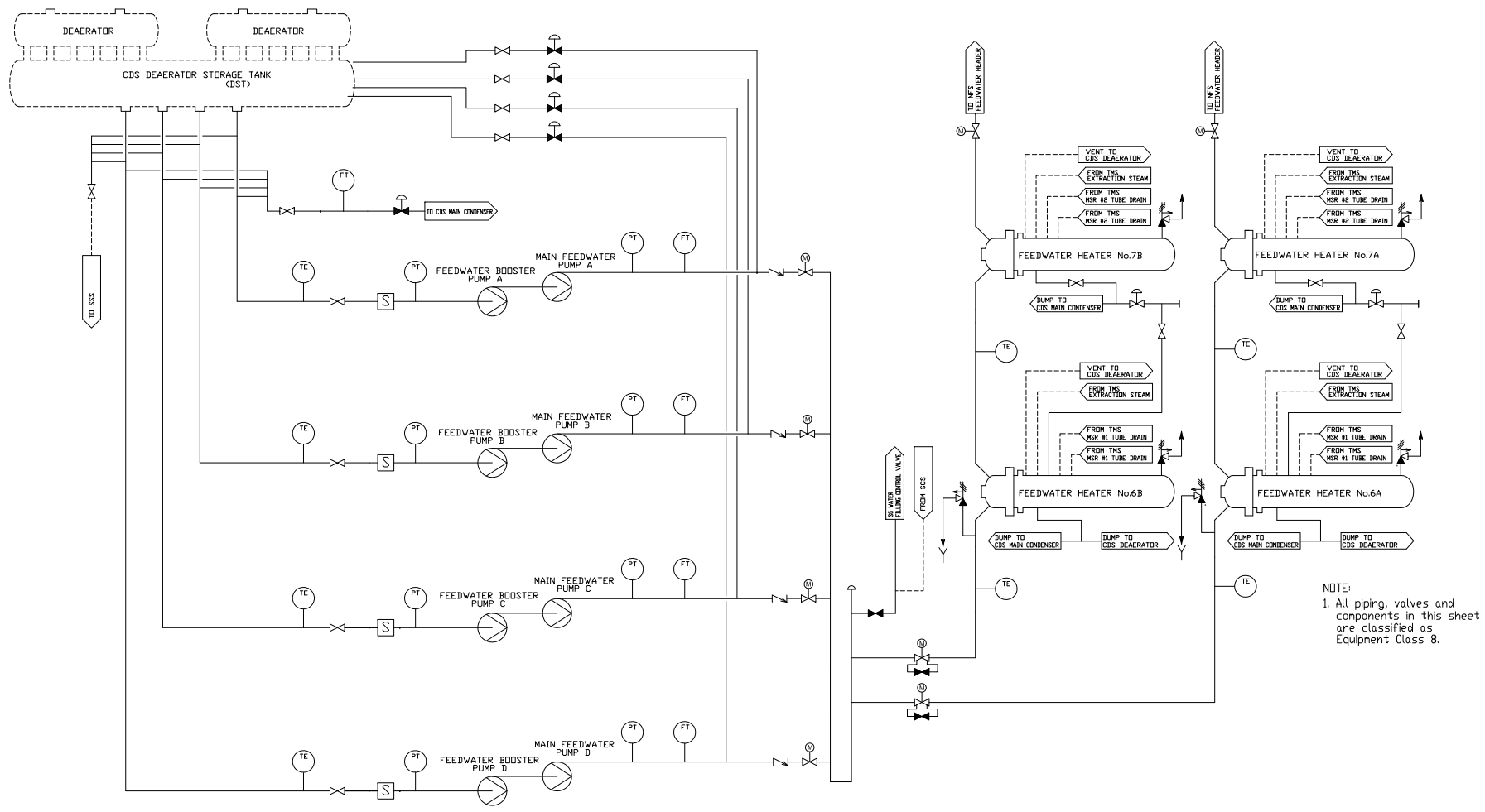

Figure 10.4.7-4 Condensate and Feedwater System Piping and Instrumentation Diagram (4/4)

10.4.8 Steam Generator Blowdown System

The steam generator blowdown system (SGBDS) assists in maintaining secondary side water chemistry within acceptable limits during normal plant operation and during anticipated operational occurrences (AOO) due to the main condenser in leakage or primary to secondary steam generator tube leakage. This is done by removing impurities concentrated in steam generators by continuous blowdown of secondary side water from the steam generators. The system processes blowdown water from all steam generators, as required.

The SGBDS is subjected to the design objectives of RG 4.21, “Minimization of Contamination and Radioactive Waste Generation: Life-Cycle Planning” as it may contains radioactivity due to the main condenser in leakage and/or primary to secondary steam generator tube leakage. A discussion of the design objectives and operational programs to address these radiological aspects of the system is contained in DCD Section 12.3.1. System and component design features addressing RG 4.21 (Ref. 10.4-20) are summarized in Table 12.3-8.

10.4.8.1 Design Bases

10.4.8.1.1 Safety Design Bases

The safety-related design bases of the SGBDS are as follows:

- The system is provided with a containment isolation valve in each blowdown line from the steam generators.
- The system is provided with two isolation valves in series. These valves isolate the secondary side of the steam generator to preserve the steam generator inventory. This provides a heat sink for a safe shutdown or to mitigate consequences of a design-basis accident.
- The SGBDS performs its safety-related function assuming a single active component failure coincident with the loss-of-offsite or onsite power.
- Piping and valve up to and including the outside containment isolation valve, are designed to ASME Code, Section III (Reference 10.4-8), Class 2, and Seismic Category I requirements. The blowdown system piping and valve from the outlet of the containment isolation valve up to and including first restraint located in the main steam/feedwater piping area are designed in accordance with ASME Code, Section III (Reference 10.4-8), Class 3 and Seismic Category I requirements.
- The safety-related portion of the SGBDS is designed to withstand the effects of a safe-shutdown earthquake and to perform its intended function following a DBA. The system is protected against wind and tornado effects as described in Section 3.3, flood protection as described in Section 3.4, and missile protection as described in Section 3.5, seismic design as described in Section 3.7 and fire protection as described in Subsection 9.5.1.

- The SGBDS safety-related portions constructed in accordance with ASME Section III (Reference 10.4-8), Class 2 and Class 3 requirements are provided with access to welds and removable insulation from areas required for in service inspection in accordance with ASME Section XI (Reference 10.4-12).
- The safety-related portion of the SGBDS is designed to function in the normal and accident environments identified in Section 3.11.
- The safety-related portion of the SGBDS is designed to protect against dynamic effects associated with the postulated rupture of piping as described in Section 3.6.
- The safety-related portion of the system is designed such that a single failure in the SGBDS will not result in:
  - Loss of integrity of other blowdown lines
  - Loss of the capability of the emergency core cooling system (ECCS) to effect a safe reactor shutdown
  - Transmission of excessive loading to the containment pressure boundary

10.4.8.1.2 Non-safety Power Generation Design Bases

The SGBDS draws water from the secondary side of each steam generator as required to:

- Assist in controlling secondary side water chemistry during normal plant operation, plant start up operation and abnormal water chemistry conditions at rated power operation.
- Continuously remove impurities including radioactive impurities, if present, from the steam generator bulk water and purify the blowdown water.
- Sample blowdown water for chemistry analysis and detect primary-to-secondary leakage with SG blowdown water radiation monitor.
- Cooldown the steam generator for inspection and maintenance.
- Establish and maintain steam generator wet layup conditions during plant shutdown periods.
- Drain the secondary side of the steam generator for maintenance.
- Monitor the concentration of radioactive material in the processed blowdown water with SG blowdown return water radiation monitor downstream of blowdown demineralizers.
- Discharge secondary side water to [[waste water system (WWS)]] or liquid waste management system (LWMS) by bypassing normal processing equipment if secondary water chemistry becomes abnormal water conditions.

- Divert from the blowdown demineralizers to [[WWS]] or the condenser if the blowdown water temperature exceeds the predetermined temperature to protect demineralizers resin.

10.4.8.2 System Description

10.4.8.2.1 General Description

The SGBDS flow diagrams are shown in Figures 10.4.8-1 and 10.4.8-2. Classification of equipment and components in the SGBDS is provided in Section 3.2.

The SGBDS equipment and piping are located in the containment, the reactor building, the auxiliary building and the turbine building (T/B).

The SGBDS consists of a flash tank, regenerative heat exchangers, non-regenerative coolers, filters, demineralizers, piping, valves and instrumentation. The flash tank, regenerative heat exchangers and non-regenerative coolers are provided to cool the blowdown water with heat recovery, while the filters and demineralizers are provided to purify the blowdown water.

One blowdown line per steam generator is provided. The blowdown from each steam generator flows independently to the flash tank. The blowdown water from the flash tank flows via one common line to regenerative heat exchangers and non regenerative coolers. Blowdown is split into two trains ahead of the heat exchangers. Common discharge from the coolers flows to the filters and demineralizers, where the flow is split into two trains. The purified water from the demineralizers flows to the condenser via a common discharge line.

The blowdown line from each steam generator is provided with two flow paths, a line for purifying blowdown water used during normal plant operation and a line for discharging the blowdown water to the [[WWS]] or the condenser used during startup and abnormal water chemistry conditions.

The US-APWR SG's utilize a "peripheral" blowdown system arrangement. In this arrangement, blowdown holes are drilled from approximately 7 inches below the secondary surface of the tubesheet and intersect with the peripheral groove on the secondary face of the tubesheet. This arrangement is shown as Figure 10.4.8-3 and facilitates effective sludge removal from the tubesheet. The blowdown from each steam generator is depressurized by a throttle valve located downstream of the isolation valves. The throttle valves can be manually adjusted to control the blowdown rate.

The depressurized blowdown water flows to the flash tank, where water and flashing vapor are separated. The vapor is diverted to deaerator and the water is transferred to regenerative and non-regenerative heat exchangers for further cooling. When the pressure in the flash tank is low, the vapor is diverted to condenser. The condensate and feedwater system (CFS) provides the condensate in regenerative heat exchanger(s) to recover thermal energy.

The turbine component cooling water system (TCS) cools blowdown water in the non-regenerative heat exchanger to protect the demineralizer resin prior to purifying the blowdown water. The impurities from the cooled blowdown water are removed by the inlet filters, demineralizers and outlet strainers. SG blowdown demineralizers consist of two cation demineralizers and two mixed bed demineralizers. The purified water is returned to the condenser.

A local grab sample point which is provided downstream of each demineralizers, a radiation monitor downstream of demineralizers outlet strainers and a radiation monitor in the sample line measures impurities concentration and the radioactivity level in the blowdown water. In case of SG tube leakage and when abnormally high radiation level is detected, the blowdown lines are isolated and the blowdown water included in SGBDS is transferred to waste holdup tank in the liquid waste management system (LWMS). See Subsection 11.2.2 for details.

Regenerative heat exchangers and non-regenerative coolers consist of two- 50 % capacity trains. When blowdown flow rate is less than 0.5% Maximum Steaming Rate (MSR) at rated power, one regenerative heat exchanger and one non-regenerative cooler are in operation while the other regenerative heat exchanger and non-regenerative cooler can remain on standby or isolated for maintenance.

Demineralizers include two - 100 percent trains. Each demineralizer train includes cation demineralizer and mix bed demineralizer.

Furthermore filters are installed upstream these demineralizers and strainers are also installed downstream these demineralizers in this SG blowdown line.

During plant startup, blowdown rate is up to approximately 3% of MSR at rated power. In this mode, blowdown liquid flows to the [[WWS]] prior to discharge or to the condenser for processing in the Condensate Polishing System (CPS). During normal operation, blowdown rate is approximately 0.5 to 1% of MSR at rated power. At the 1% of MSR at rated power blowdown rate, both cooling trains are used.

With abnormal water chemistry, the flow of blowdown rate up to approximately 3% of MSR at rated power is directed to the [[WWS]] for processing prior to discharging to the environment.

A blowdown sample line from each steam generator is provided for sampling. A SG blowdown sample cooler is located in each of these lines for cooling blowdown liquid to reduce blowdown temperature suitable for the secondary water quality monitoring station. Cooled liquid flows to secondary water quality monitoring station, SG blowdown water radiation monitor and sample sink for taking grab samples if an SG tube leak occurs.

A secondary water quality monitoring station measures pH, specific conductivity, cation conductivity and sodium ion concentration in the secondary water continuously. Furthermore grab sampling points are provided for sampling secondary water and analyzing chloride and sulfate ion concentration in the secondary water.

Two isolation valves on each blowdown line are located in the main steam/feedwater piping area. The SG blowdown water is transferred through each SG blowdown line under normal operating and transient conditions. The isolation valves close automatically upon receipt of one of the following signals:

- High radiation signal from SG blowdown return water radiation monitor
- High-high radiation signal from SG blowdown water radiation monitor
- High-high radiation signal from condenser vacuum pump exhaust line radiation monitor
- Emergency feedwater pump automatic actuation signal

In addition, the containment isolation valve closes automatically upon receipt of containment isolation signal.

The containment isolation valve in the blowdown sample line closes automatically upon receipt of one of the following signals:

- High radiation signal from SG blowdown return water radiation monitor
- High-high radiation signal from SG blowdown water radiation monitor
- High-high radiation signal from condenser vacuum pump exhaust line radiation monitor
- Emergency feedwater pump automatic actuation signal
- Containment isolation signal

10.4.8.2.2 System Operation

The various modes of operation are as follows:

10.4.8.2.2.1 Plant Startup

In this mode, the reactor is brought from cold shutdown to no-load power operating temperature and pressure.

The steam generator secondary side water chemistry is brought to operating specifications as rapidly as possible. High blowdown rates (up to 3% of MSR at rated power), are used to reduce the solids content in the steam generators. SG blowdown water is directed to the [[WWS]] or the condenser without passing through the SG blowdown demineralizers. The SG bulk water chemistry condition is maintained by discharging the SG blowdown water to [[WWS]]. To facilitate oxygen removal and enhance reduction of corrosion products in the system, chemical injection is provided in all volatile treatment (AVT) mode with higher levels of hydrazine.

As long as the SG blowdown water can be returned to the condenser, the SG blowdown water is transferred to the condenser for purification by the condensate polishers located in CPS .

10.4.8.2.2.2 Normal Operation

After the plant reaches rated power conditions, the hydrazine concentration is reduced to the concentration level for normal operation and the system remains in AVT mode. The normal blowdown flowrate varies from approximately 0.5 % to 1 % of MSR at rated power.

During normal operation, including SG tube leakage and condenser tube leakage within allowable limits and with low impurities, the CFS water chemistry is high in pH.

SG blowdown water is cooled in series of regenerative heat exchanger and non-regenerative cooler, purified by SG blowdown demineralizers and discharged to the condenser hotwell. After the initiation of purification in the SG blowdown demineralizers, all condensate water bypasses CPS.

The radioactive spent resins are transferred to solid waste management system (SWMS) for disposal, when SG tube leakage exceeds allowable limits and resins are non recyclable. During normal operation without SG tube leakage, non-radioactive spent resins are transferred to a non-radioactive spent resin holding vessel (SRHV) in CPS. These resins are shipped to an off-site facility for regeneration.

10.4.8.2.2.3 Plant Shutdown

In this mode, the reactor is brought from no-load power operating temperature and pressure to a cold shutdown.

High blowdown rates (up to 3% MSR at rated power) may be used to reduce the solids contents in the steam generators and maintain secondary water chemistry within allowable limits. The blowdown water is returned to the condenser or to the [[WWS.]]

10.4.8.2.2.4 Steam Generator Drain

The SGBDS is used to drain the steam generators. In this mode, the blowdown drain water is directed to the condenser or to the [[WWS]]. The COL Applicant is to describe the nitrogen or equivalent system design for Steam Generator drain.

10.4.8.2.2.5 Abnormal Operation

1. **Condenser Tube leakage**

   The CPS goes into service and maintains the condensate water quality. SG blowdown water can be purified by the SG blowdown demineralizers to support purification of CPS or diverted directly to the condenser.

2. **SG blowdown lines isolation signals**

When SG blowdown line isolation signals are generated, SG blowdown lines are isolated. Following recovery from this event, SG blowdown water is initially routed directly to the condenser and when the blowdown water quality is acceptable, SG blowdown demineralizers start purifying the blowdown water.

3. Abnormal water chemistry condition

When the impurities concentrations at the outlet of the SG blowdown demineralizers increase beyond the predetermined limit, blowdown water is diverted to the condenser of to the [[WWS]].

4. Malfunction in SGBDS

SGBDS lines are automatically isolated, in the case of a malfunction of regenerative heat exchangers, non-regenerative coolers, flash tank vent line and the detection of one of the following conditions:

- The outlet temperature of Non-regenerative coolers is equal to or higher than the predetermined set point.
- High Pressure in the SG blowdown flash tank
- High-high water level in the SG blowdown flash tank

In these cases, the blowdown water is diverted to the condenser and the CPS is placed in operation, as required.

Similarly when high pressure or an abnormally high water level is detected in the deaerator, the SG blowdown water is diverted without purifying to the condenser and the CPS is placed in operation, as required.

After the condition is restored, the SGBDS is placed in service.

5. SG Tube Leakage

In the case of primary to secondary SG tube leakage within allowable tube leak rate, as specified in the plant technical specifications, blowdown water continues to be purified with SG blowdown demineralizers to remove the radioactivity entering from leaking SG tube(s).

To minimize the contaminated radioactive spent resin, the secondary water is switched to low pH AVT operation. Spent resin is transferred to SWMS for disposal.

When the SG tube leak exceeds the allowable limits, the SG blowdown lines are automatically isolated upstream of the SG blowdown demineralizers by the SG blowdown return water radiation monitor high signal.

10.4.8.2.3 Component Description

Component design parameters are provided in Table 10.4.8-1. The US-APWR SG Blowdown system design specifies low-alloy steel and stainless steel for most of the piping and components in order to preclude the need for the application of the FAC monitoring program. For any portion of the piping and /or components that are made of carbon steel, the SGBDS relies on the control of the water chemistry as described in DCD Subsection 10.3.5, Water Chemistry. This control minimizes the potential for flow accelerated corrosion in the carbon steel piping and/or components. In addition, for the carbon steel lines and components, the FAC monitoring program will be conducted, which includes the inspection of the wall thickness of carbon steel piping and/or components and replacement if required. The FAC monitoring program is a COL item, (see the FAC monitoring program COL Item 10.3 (1) in Chapter 10.3.2).

1. **SG blowdown Flash Tank**

   SG blowdown flash tank is located in the T/B. During normal operation, maximum 1% MSR at rated power blowdown water is separated into flashing vapor and saturated liquid in this tank by lowering pressure and temperature in this tank.

2. **SG blowdown regenerative heat exchangers**

   SG blowdown regenerative heat exchangers are located in the T/B. Two-50 percent capacity blowdown regenerative heat exchanger trains are provided. Blowdown water from the flash tank is cooled in the regenerative heat exchanger(s) by the the condensate from the CFS to recover thermal energy from the blowdown water. The heated condensate is discharged into the deaerator.

3. **SG blowdown non-regenerative coolers**

   SG blowdown non-regenerative coolers are located in the T/B. Two-50 percent capacity non-regenerative blowdown cooler trains are provided. Blowdown water from the regenerative heat exchanger discharge flows to non-regenrative cooler(s) and is cooled by the cooling water from the TCS.

4. **SG blowdown filters**

   SG blowdown filters are located in the auxiliary building, ahead of SG blowdown demineralizers. These filters remove impurities from the blowdown water to protect the demineralizers. These filters consist of Two-100% capacity filters.

5. **SG blowdown demineralizers**

   SG blowdown demineralizers are located in the auxiliary building. The SG blowdown demineralizers purify the blowdown water during normal operation. The demineralizers consist of two cation beds and two mixed beds. Each bed has 100 percent ion exchange capability. Any cation bed can be used with any mixed bed.

6. **SG blowdown isolation valves**

   These valves isolate blowdown line upon receipt of an isolation signal. Two valves in series per SG located outside the containment in the reactor building are provided. See Table 10.4.8-1.

7. **SG blowdown sampling line isolation valves**

   These valves isolate the sampling line upon receipt of an isolation signal. One valve per SG located outside the containment in the reactor building is provided. See Table 10.4.8-1.

8. **SG blowdown sample coolers**

   These coolers are provided to cool the sample line water to approximately 113°F. Component cooling water (CCW) is used for cooling the sample line water. Four sample coolers, one for each SG blowdown line is provided. Each cooler is sized for 100 percent capacity.

10.4.8.3 Safety Evaluation

- Redundant power operated isolation valves provided in each blowdown line isolate safety and non safety-related portions of the steam generator blowdown system. This preserves the secondary side water inventory to remove sensible and decay heat from the reactor coolant system.

- The SGBDS's safety-related functions are accomplished by redundant means. A single, active component failure within the safety-related portion of the system does not compromise safety function of the system. Power is supplied by the Class 1E power system as described in Chapter 8.

- Radioactive contamination of the SGBDS can occur by a primary to secondary leakage in the steam generator. The SGBDS can become contaminated due to tritium diffusion through SG tubes even without primary-to-secondary leakage. A discussion of the radiological aspects of primary-to-secondary system leakage and conditions for operation is contained in Chapter 11. The isolation valve(s) in each blowdown line provides controls for reducing releases by isolating the affected steam generator blowdown line following a steam generator tube rupture. An inline radiation monitor on the common line from the steam generator blowdown sample lines, facilitate leak detection.

- The safety-related portions of the SGBDS are located in the containment and the main steam/feedwater piping area. These buildings are designed to withstand the effects of earthquakes, tornadoes, hurricanes, floods, external missiles and other appropriate natural phenomena. Sections 3.3, 3.4, 3.5, 3.7 and 3.8 describe the bases of the structural design of these buildings. The safety-related portion of the SGBDS is designed to remain functional during and after a safe-shutdown earthquake.

- The safety-related components of the SGBDS are qualified to function in normal and accident environmental conditions. The environmental qualification program is described in Section 3.11.

- Section 3.2 provides quality group classification, design and fabrication codes, seismic category applicable to the SGBDS.

- Failure modes and effects analysis, as listed in Table 10.3.3-1, concludes that no single failure coincident with loss of offsite power compromises system's safety functions.

- High and moderate energy pipe break locations and its effects are discussed in Section 3.6.

- Coolant chemistry specifications to demonstrate compatibility with SG tube primary to secondary system pressure boundary material are addressed in Subsection 10.3.5. Preserving these specifications is accordingly able to control secondary water chemistry needed to maintain the integrity of the SG tube materials. Furthermore the description of the bases for the selected chemistry limit and secondary coolant chemistry program for steam generator blowdown sample are specified in Subsection 10.3.5.

10.4.8.4 Inspection and Tests

The SGBDS and components are tested in accordance with the plant procedures, during the initial testing and operation program. Since the SGBDS is in continuous use during normal plant operation and essential parameters are monitored, the satisfactory operation of the system and components demonstrate system operability. The safety-related components (piping and valves) are designed and located to permit preservice and inservice inspections to the extent practical.

Additional description of inspection and tests is provided in Chapter 14.

10.4.8.5 Instrumentation Applications

Pressure, flow, temperature and radiation instrumentation monitor and control the system operation.

High pressure and high water level in the blowdown flash tank closes the upstream flow control valve.

Flow elements located downstream of the isolation valves measure and indicate blowdown flow from each steam generator.

Temperature instrumentation monitors the temperature of the blowdown fluid upstream and downstream of the heat exchangers and the fluid temperature is limited below predetermined value into demineralizers. A high temperature signal upstream of SG blowdown demineralizers isolates the flow to the demineralizers. A setpoint temperature of 130 °F is set to isolate the flow to the demineralizers.

The SG blowdown return water radiation monitor, located in the piping downstream of the demineralizers, detects the presence of radioactivity in SGBDS. Upon detection of the significant levels of radioactivity, the blowdown flow is diverted to the LWMS.

A high radiation signal of the SG blowdown return water radiation monitor close the SGBDS isolation valves.

The SG blowdown water radiation monitor in the blowdown sample line continuously monitors SG tube leakage. Upon detection of the significant levels of radioactivity, the blowdown flow is also isolated.

Secondary water chemistry is monitored as described in Subsection 9.3.2, “Process and Post Accident Sampling Systems.”

Table 10.4.8-1 Steam Generator Blowdown System Major Component Design Parameters (Sheet 1 of 3)

SG blowdown flash tank

Type	Vertical cylindrical
Number of tanks	1
Capacity (ft^3)	370
Design flow rate (lb/hr)	202,000 (1% of MSR at rated power)
Design pressure (psig)	300
Design temperature (°F)	410
Materials of construction	Stainless steel

SG blowdown regenerative heat exchangers (per heat exchanger)

Type	Shell and tube
Number of exchangers	2
Design heat duty (Btu/hr)	17.4×10^6

Operating conditions	Tube side	Shell side
Fluid	SG blowdown water	Condensate
Operating temperature - In (°F)	375	129
- Out (°F)	158	365
Design flow rate (lb/hr)	78.4×10^3	72.7×10^3
Design pressure (psig)	300	560
Design temperature (°F)	410	410
Materials of construction	Stainless steel	Carbon steel

SG blowdown non-regenerative coolers (per cooler)

Type	Shell and Tube
Number of coolers	2
Design heat duty (Btu/hr)	3.52×10^6

Operating conditions	Tube side	Shell side
Fluid	SG Blowdown Water	TCS
Operating temperature - In (°F)	158	100
- Out (°F)	113	109
Design flow rate (lb/hr)	78.4×10^3	392×10^3
Design pressure (psig)	300	200
Design temperature (°F)	200	200
Materials of construction	Stainless steel	Carbon steel

Table 10.4.8-1 Steam Generator Blowdown System Major Component Design Parameters (Sheet 2 of 3)

SG blowdown demineralizers

Number of demineralizers	4 (two cation bed and two mixed bed)
Resin amount (ft^3)	230
Design flow rate (gpm)	316
Design pressure (psig)	300
Design temperature (°F)	200
Materials of construction	stainless steel

SG blowdown sample coolers

Type	Double tube
Number of coolers	4
Design heat duty (Btu/hr)	209×10^3

Operating conditions	Tube side	Shell side
Fluid	Blowdown water	CCW
Operating temperature - In (°F)	557	100
- Out (°F)	113	128
Design flow rate (lb/hr)	440	7,500
Design pressure (psig)	1185	200
Design temperature (°F)	568	200
Materials of construction	stainless steel	carbon steel

SG blowdown demineralizers inlet filters

Type	Vertical cylindrical, cartridge
Number of filters	2
Operating flow rate (gpm)	316
Operating temperature (°F)	113
Design pressure (psig)	300
Design temperature (°F)	200
0.8 micron particles retention (%)	98
Material of construction, filter	Polyproplyene
Body	Stainless steel

Table 10.4.8-1 Steam Generator Blowdown System Major Component Design Parameters (Sheet 3 of 3)

SG blowdown isolation valves

Number of valves	8
Type	Air-operated globe
Nominal valve size (inch)	4
Design pressure (psig)	1,185
Design temperature (°F)	568
Material of construction, body	Stainless steel
Construction Code, First valve	ASME Section III, Class 2
	Seismic Category I
Second valve	ASME Section III, Class 3
	Seismic Category I

SG blowdown sample line containment isolation valves

Number of valves	4
Type	Air-operated globe
Nominal valve size (inch)	3/4
Design pressure (psig)	1,185
Design temperature (°F)	568
Material of construction, body	Stainless steel
Construction Code	ASME Section III, Class 2
	Seismic Category I

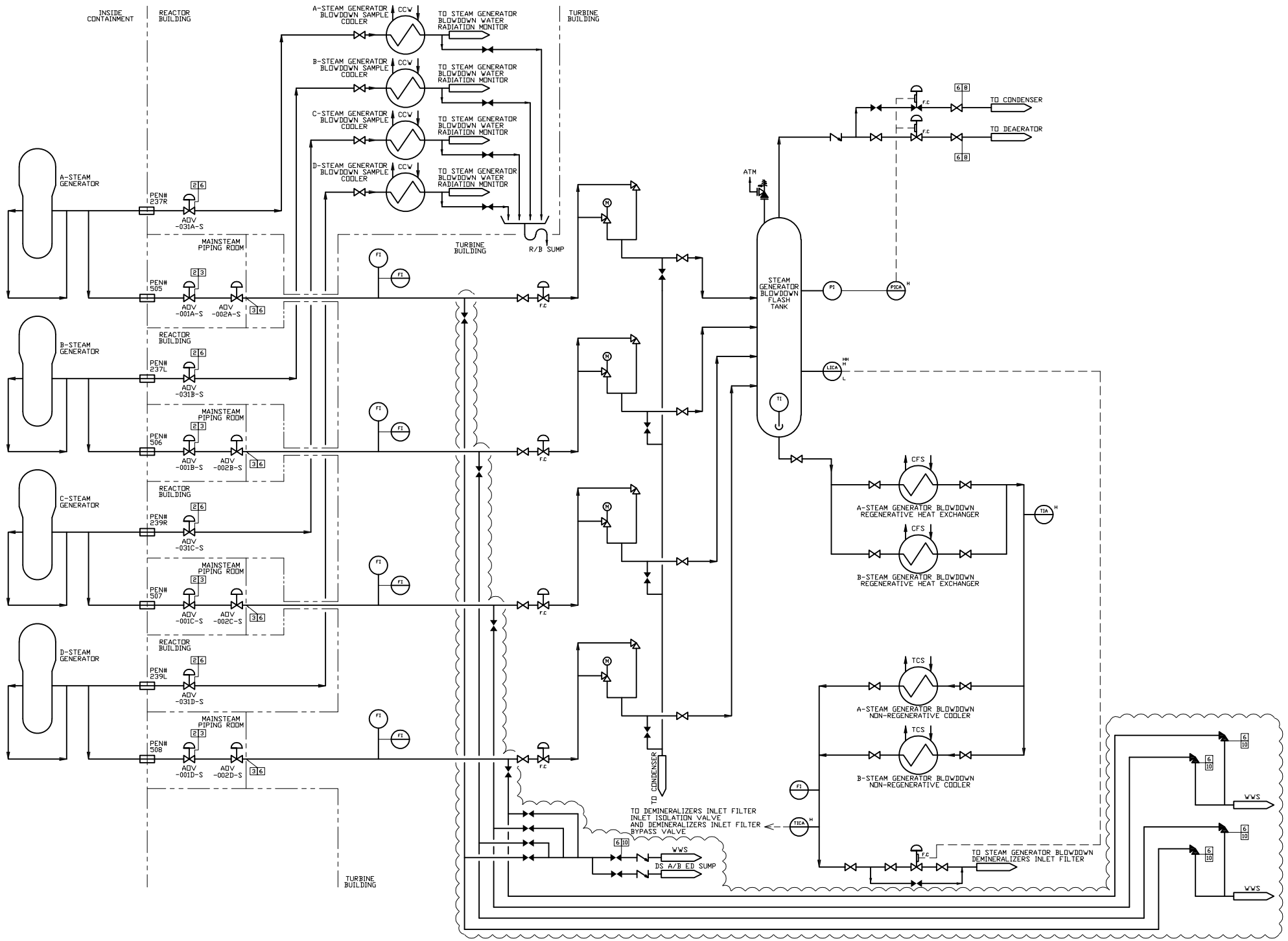

Figure 10.4.8-1 Steam Generator Blowdown System Piping and Instrumentation Diagram (1/2)

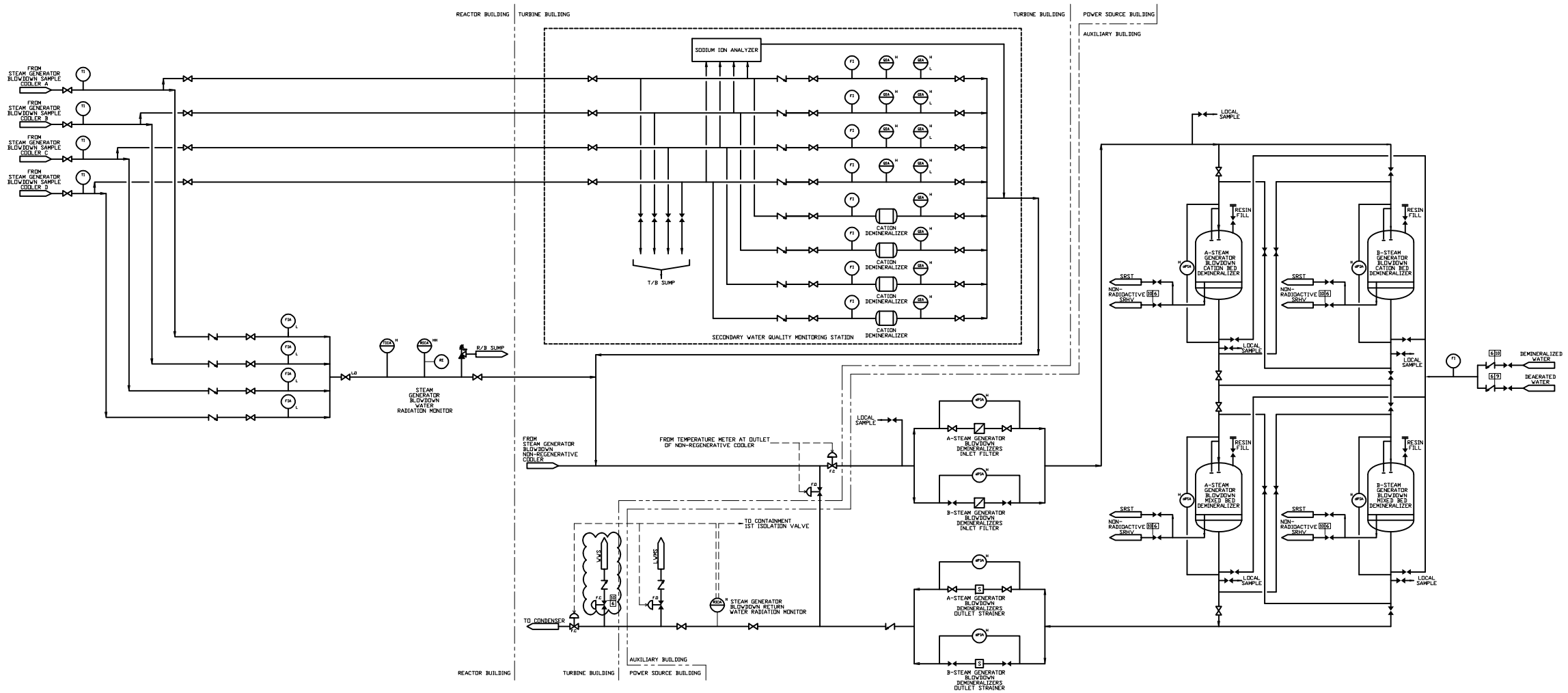

Figure 10.4.8-2 Steam Generator Blowdown System Piping and Instrumentation Diagram (2/2)

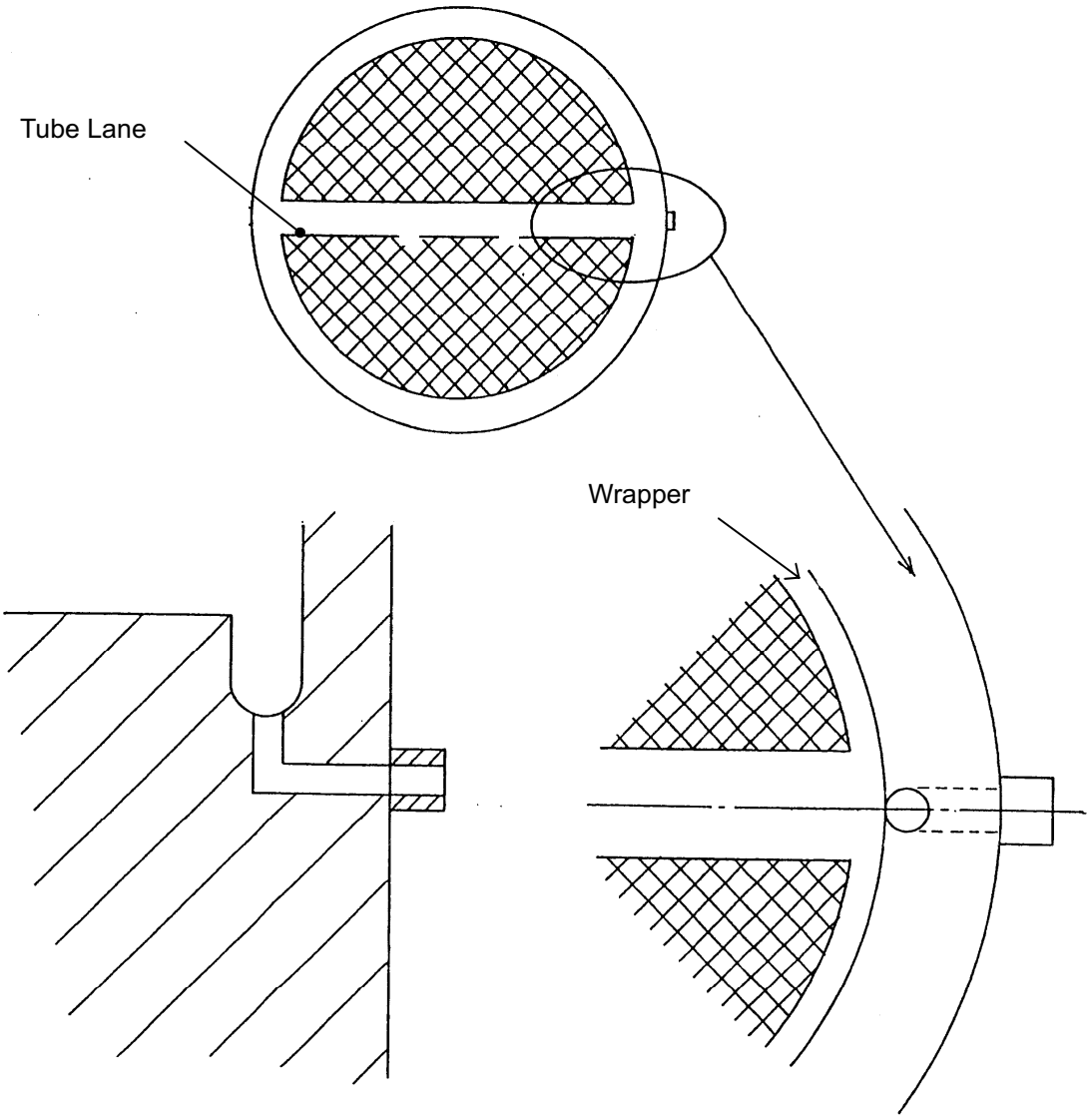

Figure 10.4.8-3 Concept of Peripheral Blowdown

10.4.9 Emergency Feedwater System

The emergency feedwater system (EFWS) is designed to supply feedwater to the steam generators (SG) whenever the reactor coolant temperature is above 350°F and the feedwater system is not in operation. The EFWS is designed to remove reactor core decay heat and reactor coolant system (RCS) sensible heat through the SGs following transient conditions or postulated accidents such as a reactor trip, loss of main feedwater, main steam line breaks (MSLB) or feedwater line breaks (FLB), loss of offsite power (LOOP), small break loss of coolant accident (small break LOCA), station blackout (SBO), anticipated transient without scram (ATWS) and steam generator tube rupture (SGTR). The EFWS is not normally used during normal plant startup and normal plant cooldown.

The EFWS consists of two motor-driven pumps, two steam turbine-driven pumps, two emergency feedwater pits, piping, valves and associated instrumentation. The EFWS is an ASME Code, Section III (Reference 10.4-8), Classes 2 and 3, Seismic Category I, redundant system with Class 1E electric components as indicated in Table 3.2.2. The EFWS design meets the requirements of II.E.1.1 relating to reliability evaluation of the EFWS and II.E.1.2 of NUREG-0737 (Reference 10.4-13) regarding the automatic and manual initiation and flow rate indication of the EFWS.

The EFWS supplies feedwater to the SGs at a sufficient flowrate to meet the requirements for the transient conditions or postulated accidents and hot standby. Flowrate is controlled as necessary to maintain stable plant conditions by the motor-operated emergency feedwater control valves.

10.4.9.1 Design Basis

The EFWS design bases to meet the safety-related functional requirements are provided below:

- The EFWS is designed to remain functional after a safe-shutdown earthquake (SSE). The essential portions of the EFWS components are designed to Seismic Category I requirements and are located inside the reactor building which is designed for seismic, wind and tornado effects. See Sections 3.2, 3.3, and 3.9.

- The EFWS components and piping have sufficient physical separation and shielding to protect against the effects of postulated missiles. Protection of the essential portions of the EFWS from the effects of internally and externally generated missiles is discussed in Section 3.5.

- The functional performance of the EFWS is not affected by environmental conditions, internal flood, pipe whip or jet impingement that may result from high or moderate energy piping breaks or cracks. The building where the EFWS components are located is designed for and provided with suitable flood protection during abnormally high water levels (adequate flood protection considering the probable maximum flood) to ensure functional capability. Flood protection is discussed in Section 3.4. Protection against the effects of pipe whip and jet impingement that may result from high energy piping breaks and moderate

energy piping cracks is discussed Section 3.6. The environmental design of EFWS components is discussed in Section 3.11.

- A malfunction or single active failure of a system component or non-essential equipment does not reduce the performance capabilities of the EFWS. The EFWS and supporting systems ensure the required flow to the SGs in the event of a single active failure. The EFWS can perform all safety-related functions assuming a single active component failure in one train and a maintenance outage of one active component at on-line maintenance (OLM).

- The EFWS can utilize diverse power sources such that the system performance requirements are met with either power source (ac or dc). The EFWS satisfies the requirement that the pumps be powered by diverse power sources.

- Provisions are included to verify correct EFWS operation, to detect and control system leakage, and to isolate portions of the EFWS in case of excessive leakage or component malfunctions.

- The EFWS is designed with provisions to permit periodic inservice inspection and operational testing of the pumps and valves during normal plant condition.

- The EFWS is designed with I&C features to verify that the system is operating in the correct mode.

- The EFWS is designed to provide emergency feedwater (EFW) automatically for the removal of sensible heat and reactor core decay heat in order that there is no damage to the reactor core following a loss of main feedwater in order to bring the reactor core from a condition of full power to where the reactor coolant temperature is brought to the point at which the residual heat removal system (RHRS) may be placed in operation. The EFWS is automatically initiated by the EFW actuation signal such as LOOP signal, an ECCS actuation signal, main feedwater pumps trip (all pumps) signal, or a low steam generator water level signal in any of the SGs. The automatic initiating circuits are powered from the emergency buses.

- The EFWS maintains the capability of the SGs to remove sensible heat and reactor core decay heat by converting the EFW to steam, which is then discharged to the atmosphere.

- The EFWS is capable of automatically initiating flow upon receipt of a EFW actuation signal. The system is also capable of manual actuation to provide protective action and for operational testing independent of the automatic signal. A single failure of the manual circuit does not result in loss of system function.

- The EFWS design is provided with the capability to automatically terminate EFW flow to a depressurized (faulty) SG and to automatically provide EFW to the intact SGs. The EFWS design is also capable of automatically terminating EFW flow to prevent overfilling of the SGs.

- The EFWS is designed such that in the unlikely event that the main control room (MCR) must be evacuated, the EFWS can be operated from the Remote Shutdown Console.

- The EFWS design meets the recommendations identified in NUREG-0611 (Reference 10.4-14).

- The EFWS design meets the provisions of TMI Action Plan Item II.E.1.2 of NUREG-0737 (Reference 10.4-13) regarding the automatic and manual initiation of the system, and 10 CFR 50.62(c)(1) (Reference 10.4-15) regarding the automatic initiation of the system on conditions indicative of an ATWS.

- The EFWS has the capability to permit operation at hot standby for 8 hours followed by 6 hours of cooldown to the RHR cut-in temperature from the MCR using only safety related equipment with a single active failure. The EFWS is designed with two EFW pits, both pits together providing a sufficient volume of water required for the emergency condition.

- The EFWS is designed with sufficient diversity to remain operable for a limited duration with neither offsite nor onsite ac power available. Turbine-driven pumps are designed to be available for SBO condition. Refer to Section 8.4 for the plant design to meet station blackout (SBO) requirements.

- Technical Specifications provide Limiting Condition for Operation and the surveillance testing requirements for EFWS to ensure continued system reliability during plant operation. See Chapter 16 for details.

- The EFWS is designed and constructed in accordance with ASME Code, Section III (Reference 10.4-8), Class 3 requirements up to the motor-operated EFW isolation valves (containment isolation valves). The containment isolation valves and the downstream piping to the feedwater system are safety class 2.

- The EFW pump main steam line steam isolation valves (containment isolation valve) in the steam supply lines and the steam piping upstream of the containment isolation valves are ASME Code, Section III (Reference 10.4-8), Class 2. The steam supply lines to the EFW pump turbine from the downstream of the containment isolation valves are designed and constructed in accordance with ASME Code, Section III (Reference 10.4-8), Class 3 requirements.

- The safety classifications are shown in the EFWS flow diagram shown in Figures 10.4.9-1 and 10.4.9-2. Codes and standards applicable to the EFWS and components are listed in Table 3.2-2.

- The principle emergency feedwater system materials are shown in Table 10.4.9-7.

- The recommendations of RGs 1.36 and 1.37 are applied during fabrication of the EFWS and preheat guidelines in ASME Code Section III, Appendix D, Article D-1000 for carbon steel are applied to the EFWS component.

10.4.9.2 System Description

The EFWS flow diagram is shown in Figures 10.4.9-1 and 10.4.9-2. The system consists of two motor-driven pumps, two steam turbine-driven pumps, two EFW pits, and associated piping, valves, instruments and controls. The EFWS components are located in the reactor building. Table 10.4.9-1 provides data for the major components in the EFWS. Table 10.4.9-2 presents steam generator makeup flow requirements.

The EFWS is comprised of four 50% capacity pumps. Each EFW pump is sized to supply the feedwater flow required for removal of 50% of the decay heat from the reactor. The EFWS capacity is sufficient to remove decay heat and to provide adequate feedwater for cooldown of the RCS at an average temperature of approximately 50°F per hour. Main steam depressurization valves (MSDV) are used to relieve the steam produced by EFW during safe shutdown, following transient and accident conditions.

For a transient or accident condition, the EFW flow is delivered within 140 seconds of any automatic EFW actuation signal to at least two effective (intact) SGs.

The EFWS is designed with two 50% EFW pits, both pits together provide a sufficient volume of water required for the emergency condition.

The EFW flow is provided from the two EFW pits to the EFW pumps. The design of both EFW pits provides heat removal capability for a period of 14 hours. The total period of 14 hours consists of 8 hours at hot standby, and followed by a 6-hour cooldown of the primary system at an average rate of approximately 50°F per hour.

Each EFW pump discharge line connects with a tie line with a motor-operated isolation valve. During normal plant operation (at non-OLM), the discharge tie line isolation valves of each EFW pump discharge tie line are in the closed position to provide separation of four trains. During OLM, the tie line isolation valves of each EFW pump discharge tie line are kept in the open position. At OLM, all the discharge tie line isolation valves are required to be kept open to supply the specified flow rate of EFW to the SGs, assuming OLM of one EFW pump and the single failure of one of the three remaining EFW pumps.

The motor-operated EFW isolation valves and EFW control valves are provided in each EFW pump discharge line to close automatically to terminate the flow to the affected SG and continuously supply feedwater to the intact SG as discussed below:

A. Main feedwater line break

In the event of a FLB, the EFW line connected to that SG is automatically isolated by redundant motor-operated valves, which receive a low steam pressure signal to close. As a result, almost none of the EFW pump flow is lost by spilling out of the break. The logic is arranged so that only one EFW line can be automatically isolated.

B. Main steam line break

In the event of a MSLB, the SGs depressurize and the EFWS provides SG feedwater flow. In order to prevent excessive SG feedwater flow and pump runout, the motor-operated EFW control valve located in the EFW discharge line to each SG is provided with a pre-set open position. This position is adjusted and set during

pre-operational testing. The line to the faulted SG is isolated automatically, as discussed above, for a rupture of a main feedwater line; isolation of the faulted SG and the termination of flow to the faulted SG limits the RCS cooldown and mass/energy release to the containment.

C. Steam generator tube rupture

Upon detection of a water level increase of the SG, the EFW isolation valves and EFW control valves are automatically closed.

The failure modes and effects analysis given in Table 10.4.9-4 demonstrates that required EFW flow is ensured to the SGs during postulated accident conditions with a single failure in the EFWS.

10.4.9.2.1 Description of Major Components

A description of the major components and features in the EFWS is as follows:

A. Emergency feedwater pumps

Each EFW pump is normally aligned to feed one SG. Each EFW pump takes suction from one of two EFW pits and the discharge flow is directed to one of the four SGs.

The EFW pump is designed to develop adequate head to supply the design flow of at least 400 gpm to each SG, when the SG pressure is equivalent to the set pressure of the first stage of the main steam safety valve (safety valve with lowest set pressure) plus 3% of accumulation and the pump discharge tie line is closed.

The maximum EFW pump flow is limited by the motor-operated EFW control valves which have a preset open position.

A mini flow line from the EFW pump discharge line to the EFW pit with a normally open valve and an orifice is provided to maintain minimum recirculation flow required for pump protection. The minimum flow line ensures a minimum recirculation flow for pump cooling whenever the pumps are running. A and B EFW pump shares their minimum flow line. C and D EFW pump also share their minimum flow line. Following the requirements in NRC IE Bulletin IEB 88-04, the minimum flow line has sufficient capacity so that either of the pumps which share a minimum flow line does not dead-head. A separate full flow line with a normally closed valve and an orifice allows pump testing during normal plant operation at the pump design flow rate without injection to the SGs. Both the mini flow line and full flow line are routed to the EFW pit by a common header.

Two motor-driven and two turbine-driven EFW pumps, with different power supplies are provided. Two motor-driven EFW pumps connect to each different safety ac bus to achieve the specific safety functions in case of off-site power loss; each bus is backed by a redundant emergency power source. Table 10.4.9-6 presents the power sources for EFWS components.

The EFW pumps automatically start on receipt of LOOP signal, ECCS actuation signal, main feedwater pumps trip (all pumps) signal, or low steam generator water level signal in any one of SGs.

B. Motor-driven (M/D) emergency feedwater pumps

Two of the four EFW pumps are horizontal, centrifugal pumps driven by electric motors which are supplied with power from independent, Class 1E Safety ac bus. Each motor-driven pump has a capacity of 450 gpm. The capacity of each motor-driven pump is based on the required flow of 400 gpm to SG and 50 gpm through miniflow line. The design parameters of the pump and the motor are provided in Table 10.4.9-1.

C. Turbine-driven (T/D) emergency feedwater pumps

Two of the four EFW pumps are turbine-driven providing diversity of motive pumping power. The pump is a horizontal, centrifugal unit with a capacity of 550 gpm. The capacity of each turbine-driven pump is based on the required flow of 400 gpm to SG and 150 gpm through miniflow line.

The steam supply line to each T/D EFW pump turbine is connected to main steam lines from two SGs. Steam supply piping to the turbine driver for the A-EFW pump is taken from the two main steam lines (A-main steam Line and B-main steam Line) and the steam supply piping to the turbine driver for the D-EFW pump is taken from the two main steam lines (C-main steam Line and D-main steam Line). The steam supply connection is made upstream of the MSIVs. The motor-operated isolation valve and a check valve are provided in each of these steam lines to the EFW pump turbine. The check valves prevent blowdown from an intact SG into a faulted SG. The MOV provides isolation of these lines in case of a SGTR. The steam line to each T/D-EFW pump is also provided with a normally closed motor-operated EFW pump actuation valve. Opening of this valve starts the T/D EFW pumps. The steam discharge from the T/D-EFW pumps is routed to the atmosphere. The design parameters of the pump and the motor are provided in Table 10.4.9-1.

D. Emergency feedwater pits

Two 50% EFW pits are provided. The EFW pits are completely enclosed stainless steel lined structures that do not contain any operating equipment. All components inside the pit are also constructed of stainless steel. No foreign materials intrusion is anticipated. An access hatch located above the 100 % water level is available for inspections of pit interior areas. The EFW pits are filled with clean demineralized water. Filtration is not required. Both EFW pits together contain the minimum water volume required for maintaining the plant at hot standby condition for 8 hours and performing plant cooldown for 6 hours until the RHRS can start to operate. The inside dimensions of each pit is approximately 28 feet long, approximately 43 feet wide and approximately 35 feet deep. With the minimum pit level of 92.5% during normal plant condition, the volume of water in each pit available for the EFW is 186,200 gallon. With two pits, each with a capacity of 241,000 gallons at the water levels from 0 to 100%, it is sufficient to perform hot standby and plant cooldown until the RHRS starts to perform heat removal. And also each pit has adequate capacity from the pit low level alarm setpoint to allow at least 20 minutes for operator action in accordance with the additional short-term recommendation “Primary EFW Water Source Low Level Alarm,” of generic recommendations of NUREG-0611 and NUREG-0635.

The makeup line routed from the demineralized water storage tank to the EFW pit is used for initial water fill of the EFW pits and to provide makeup water to maintain the water level in the EFW pits during normal plant operation. The demineralized water storage tank provides a backup source for EFWS. Due to a sufficient volume of water in the EFW pits for safe shutdown by keeping the plant at hot standby for 8 hours and performing plant cooldown to RHR entry condition for 6 hours after accident or transient, this backup supply is not required to be safety-related. The manual valves from the demineralized water storage tank to the EFW pumps are normally closed. If the water level of both EFW pits reaches low-low water level after an accident or transient without stabilizing at MODE 4 condition, the manual isolation valve will be opened by an operator. Before opening the isolation valve, the operator will verify that the storage tank has adequate water level to keep sufficient NPSH of the EFW pumps.

The common suction line from each EFW pit is connected by a tie line with two normally closed manual valves. When the two EFW pumps taking suction from the same pit are not available (OLM of one EFW pump and the single failure of other EFW pump), the tie line connections to EFW pits need to be established. In this case, to prevent depletion of the water source from one pit, the tie line valves at the EFW pit outlet are required to be opened within about 8 hours after starting EFW pumps to perform continuous feedwater supply to the intact SGs. The design parameters of the EFW pit are provided in Table 10.4.9-1.

Because the EFW pits have the water supplied directly from demineralized water storage tank without deaerating and the inventory water of the pit has direct contact with atmosphere, the dissolved oxygen level of the pit inventory is not zero, however, because the design temperature of the EFW pit is 150 Deg F, which is determined to exceed assumed maximum operating temperature of the EFWS, stress corrosion cracking would not occur in such low temperature condition even if the level of dissolved oxygen is high, therefore, the EFW pits have adequate integrity.

Sampling of the EFW pits is performed monthly, and turbidity is ensured to be not over 1 ppm. Any deviation is corrected by utilizing feed and bleed method. Demineralized water from the demineralized water storage tank (make-up water source) is used for feeding the water inventory. Complete inspections with the pits drained will be performed periodically per the ISI program.

E. Emergency feedwater control valves

The normally open motor-operated globe control valves are provided in the EFW pump discharge lines to each SG for controlling the EFW flow. The control valve pre-set open position is established during pre-operational testing to limit the maximum flow during steam line break accidents. These flow control valves also provide isolation function of the EFW to the faulty SG.

The motor-operated valves are normally-open and verified whether they are in pre-set open position at startup of the EFW pump on receipt of open check signal such as LOOP signal, ECCS actuation signal, main feedwater pumps trip (all pumps) signal, or low steam generator water level signal in any one of the SGs. The motor-operated valves are also closed on receipt of such signal as high SG water level or low main steam line pressure. The design parameters of these valves are provided in Table 10.4.9-1.

F. Emergency feedwater isolation valves

The motor-operated gate isolation valves are provided in the EFW lines routed from the EFW pump to each SG for isolation of the EFW to the faulty SG.

The motor-operated valves are normally-open and verified whether they are in fully open position at startup of the EFW pump on receipt of a open check signal such as LOOP signal, ECCS actuation signal, main feedwater pumps trip (all pumps) signal, or low SG water level signal in any one of SGs. The motor-operated valves are also closed on receipt of such signal as high SG water level or low main steam line pressure. The design parameters of these valves are provided in Table 10.4.9-1.

G. Turbine-driven EFW pump main steam-line steam isolation valves

The EFW pump turbine steam isolation valves are normally open dc motor-operated gate valves. One valve is provided in each line from the SG that provides steam to the EFW pump turbine. These valves are containment isolation valves. They are closed if required to terminate a leak or break or when the EFW pump actuation valve requires maintenance. The valves are operated from the MCR. The design parameters of these valves are provided in Table 10.4.9-1.

H. Turbine-driven EFW pump actuation valves

There are four normally closed EFW pump actuation dc motor-operated valves. Two valve are provided for each steam supply line to EFW pump turbine from two main steam lines. The valves automatically open upon receiving EFW pumps actuation signal. The design parameters of these valves are provided in Table 10.4.9-1.

10.4.9.2.2 System Operation

A. Operation During Normal Plant Operation

a. Plant Startup

The EFWS is not used during plant startup.

b. Normal Plant Operation

The EFWS is not in operation during normal plant operation and is in standby mode. The EFW pit water level is maintained at, or above, the minimum required inventory to ensure adequate RCS heat removal and cooldown in the event of the failure of the feedwater system.

The manual valves in the suction line flow paths from the EFW pits to the M/D and T/D EFW pumps are normally opened.

The EFW isolation valves and control valves in the M/D and T/D EFW pumps discharge paths to the SGs are normally opened.

c. Plant Shutdown

The EFWS is not used during normal plant shutdown.

B. Operation during Plant Transients and Accidents

The EFWS supply capacity is sufficient for makeup during hot standby conditions and cooldown of the plant following a transient or accident condition. The EFW pumps are aligned to supply water from the EFW pits. The EFW pumps are started by an EFW actuation signal such as LOOP signal, ECCS actuation signal, main feedwater pumps trip (all pumps) signal, or low steam generator water level signal in any one of SGs. During transients and accidents, the operator controls the EFW flow rate to the SGs to maintain acceptable SG levels.

The two M/D EFW pumps are supplied with electrical power that is backed up by the power from the emergency power source. The motor-operated valves are supplied from Class 1E power sources. The two T/D-EFW pumps utilize a direct steam-turbine drive so that EFW can be supplied in the event that all sources of ac power are lost.

Once the SG water levels have been restored to normal values, the EFW flow rates can be reduced by manually throttling down the EFW flow control valves from the MCR.

The EFWS is designed to limit the maximum amount of feedwater that can feed into a failed SG in order to prevent potential SG overfilling, or excessive containment pressurization following MSLB. The maximum open position of the EFW flow control valves is set during pre-operational testing to limit the maximum EFW pump runout flow rate to the SG.

During OLM, even with one EFW pump out for maintenance and a single failure of an EFW pump, at least two of four EFW pumps are available to provide feedwater flow to the SGs.

a. Loss of Off-Site Power

All EFW pumps automatically start on LOOP. Even in the case when a single active failure occurs (such as a failure of a M/D pump or T/D pump), three EFW pumps are available and this satisfies plant safety requirements to maintain water level in the SGs.

Upon LOOP, the main feedwater pumps trip and the water level of the SGs initially lowers and then recovers gradually upon initiation of the EFW flow. To maintain the adequate range of water level in SGs, the EFW flow rate is manually controlled by the operator from the MCR.

b. Loss of Main Feedwater

The operation of the EFWS during loss of main feed water is similar to loss of offsite power event, as discussed above.

c. Loss-of-coolant accident (LOCA)

The EFW pump is adequate to perform heat removal for a small break LOCA while the reactor coolant system is filled with water by the safety injection system

and natural circulation occurs. During this event, the EFW flow required approaches that required by a Loss of Main Feedwater event. As the size of the LOCA break increases, the flow required from the EFWS decreases because the safety injection flow removes more decay heat from the core. Eventually, for large break LOCAs, safety injection flow removes the decay heat and no EFW is required from the EFWS.

d. Feedwater Line Break (FLB)

FLB is a postulated accident assuming that the main feedwater piping between the SG and the main feedwater check valve ruptures during normal plant operation. At this time, water inventory in the faulted SG is depleted, and main feedwater and EFW spills out of the break, resulting in reduction of heat removal in the secondary side and leading to temperature increase of the RCS. Hence, it is necessary to isolate the faulted SG and supply EFW to the intact SGs.

The EFW pump automatically starts following FLB. Upon detection of a main steam pressure decrease in the faulted loop, the faulted loop is automatically isolated and continuous EFW is supplied to the intact SGs.

e. Main Steam Line Break (MSLB)

The most limiting condition resulting from a spectrum of MSLB is a double-ended rupture of a main steam line, occurring at zero power. The accident results in a severe cooldown transient. The EFWS is expected to provide the maximum SG feedwater flow rate because that makes the cooldown more severe until the affected SG is isolated. The EFWS is required to limit its feed flow to the SGs, especially to the faulted SG. The flow from the EFW line to the faulted SG is isolated automatically as described in the FLB accident analysis. The EFW supply function is not needed during the mitigation of the MSLB accident.

f. Station Blackout (SBO)

A SBO results in the loss of normal offsite and emergency onsite ac power sources. The M/D-EFW pumps are inoperable because there is no ac power. Both T/D EFW pumps are available because of the dc power supplied by class 1E batteries with two hours capacities. EFW flow control is also available because the EFW flow control valves are powered by dc power which is available from class 1E batteries. In addition, at least within one hour after the SBO occurrence, one unit of the AAC-GTG is started, and by the operation of one unit of emergency feedwater pump (turbine-driven) area air handling units, the integrity of one unit of T/D EFW pump is ensured. The AAC-GTGs minimize the potential for common cause failures with the Class 1E GTG as discussed in Section 8.4.1.3. From the above, because the AAC GTGs are available during SBO event, in accordance with the generic recommendations of NUREG-0611 and NUREG-0635 Generic Short Term Recommendation No. 5 (GS-5), the EFWS is capable of providing required EFW flow for at least two hours from one T/D-EFW pump. After starting the operation of the AAC-GTG, charging to the Class 1E batteries is resumed, therefore, the turbine-driven EFW pump is able to continue to operate after two hours of the SBO and is independent of any ac power source.

g. Anticipated Transient Without Scram (ATWS)

The acceptance criteria for an ATWS is to provide adequate heat removal such that the maximum RCS pressure is limited to less than the emergency stress limit. For this event, the EFWS is actuated by the DAS (diverse actuation system).

h. Steam Generator Tube Rupture (SGTR)

The SGTR is a postulated accident that assumes that, a SGTR and the reactor coolant flows to the secondary side of the SG. The EFW pump automatically starts on receipt of an ECCS actuation signal. Upon detection of a water level increase in the faulted SG, the EFW isolation valve on piping to the faulted SG is automatically closed. When all pumps start and operate without failure, the SG water level is verified in all SGs. If there is no potential for decrease in SG level, the pump is stopped depending on the condition. The emergency operating procedures provide additional details for operator actions during the accident conditions.

A summary of system performance for various accident conditions is provided in Table 10.4.9-3. The table includes flows to both the faulted and intact SGs. Comparing these data with those in Table 10.4.9-2, it is seen that minimum flow requirements for the intact SGs are satisfied under all failure modes.

C. Water Hammer Prevention

The following items are identified as water hammer prevention and mitigation measures in EFWS.

- Automatic initiation of EFW flow following a loss of main feedwater flow to prevent draining of the SG feedring in accordance with NUREG-0927
- Implementation of EFW pipe refill flow limits to minimize steam-water entrainment and subsequent formation of water slug in accordance with BTP 10-2
- Detection of a high temperature main feedwater back leakage from an EFW check valve which becomes the cause of water hammer

The Combined License Applicant is to provide operating and maintenance procedures in accordance with NUREG-0927 and a milestone schedule for implementation of the procedure. The procedures should address:

- Prevention of rapid valve motion
- Introduction of voids into water-filled lines and components
- Proper filling and venting of water-filled lines and components
- Introduction of steam or heated water that can flash into water-filled lines and components

- Introduction of water into steam-filled lines or components
- Proper warmup of steam-filled lines
- Proper drainage of steam-filled lines
- The effects of valve alignments on line conditions

10.4.9.2.3 Testing and Inspection Requirements

The EFW pumps are hydrostatically tested by the pump vendor in accordance with American Society of Mechanical Engineers (ASME) Section III (Reference 10.4-8), Class 3. Prior to initial plant start-up, the entire EFWS is hydrostatically tested after the installation is complete in accordance with the requirements of the ASME Boiler and Pressure Vessel Code, Section III (Reference 10.4-8), Class 3. Chapter 14, Initial Test Program, describes testing to verify component installation and initial operation including a pump endurance test in accordance with the additional short-term recommendation "EFW Pump Endurance Test" in the generic recommendations of "NUREG-0611 and NUREG-0635" and the testing of transfer between normal and emergency buses, as well as integrated system testing.

Periodic testing in accordance with Technical Specifications is performed during normal plant operation. The EFWS is designed with provisions for full design flow testing of EFW pumps during normal plant operation. Each pump has a higher capacity orifice line in parallel with the miniflow orifice line to allow the pump to be operated at its design flow rate without injecting water into the SGs during periodic inservice testing. See Section 3.9 for inservice testing and inspection requirements. The EFWS, its initiating signals, and its circuits are capable of being tested periodically while the plant is at power, in accordance with the frequency specified in the Technical Specifications.

During periodic testing of the EFW pumps, manual valve alignment is required. Only one EFW pump is tested at a time. Because each EFW pump is capable of providing 50% of the total required flow, full system flow requirements is available at all times. Additionally, when these valves are changed from their normal position, an alarm is annunciated in the control room to alert the operators. After finishing the periodic testing of EFW pumps, an operator determines that the EFWS valves are properly aligned and a second operator independently verifies that the valves are properly aligned.

10.4.9.2.4 Instrumentation Requirements

The EFWS includes appropriate instrumentation inputs to the safety-related instrumentation and control systems to perform the following functions:

- Automatic actuation of safeguards systems and components following an accident or transient.
- Monitoring of the EFWS process parameters to confirm proper EFWS operation.

The automatic initiation signals and circuits are designed so that their failure does not result in the loss of manual initiation from the control room in accordance with Regulatory

Guide 1.62 (Reference 10.4-16). The engineered safety features system details are provided in Section 7.3.

The EFWS also includes appropriate controls to allow for manual actuation and/or control of EFWS components if necessary, such as backup manual actuation of components that did not automatically actuate.

The EFW flow element/transmitter is provided in each EFW line to the SG, to transmit the flow rate signal to the indication in the MCR. The pressure transmitter is provided at the discharge line of the EFW pump to transmit the pressure signal to the indication in the MCR. Two channels of the level transmitters are provided at each pit to indicate the water level of the EFW pits during normal plant condition, monitor water level following an accident and annunciate abnormal water level. A non-safety water level sensor diverse from the safety-related water level sensors are installed in each EFW pit. The EFW discharge line temperature upstream of the EFW flow control valves is monitored. A high temperature alarm in the MCR is an indication of the back leakage of the check valve, requiring operator action.

Safety-related display instrumentation related to the EFWS is discussed in Section 7.5. Information indicative of the readiness of the EFWS prior to operation and the status of active components during system operation is displayed for the operator in the MCR and at the remote shutdown console. See Section 7.4 for details. The indication and controls provided for the EFWS are summarized in Table 10.4.9-5.

Sections 7.3 and 7.5 describe instrumentation design details for actuating, monitoring and controlling operation of the EFWS, including alarm and system actuation.

10.4.9.3 Safety Evaluation

The EFWS components, instrumentation, and power supplies are sized and designed with sufficient redundancy to maintain the safety-related functions of the system under all credible transient and accident conditions. The combination of turbine-driven pumps and motor-driven pumps provides a diversity of motive power sources to assure delivery of feedwater under all transient and accident conditions.

The EFWS and supporting systems are designed to provide the required flow to the SGs with a LOOP, assuming a single active component failure in one train and a maintenance outage of one active component at On-Line Maintenance.

The EFWS, with two Seismic Category I EFW pits, provides a means of pumping sufficient feedwater to remove the core decay heat following a loss of main feedwater event as well as to cool down the RCS to a temperature of 350°F at which point the RHRS can operate. A minimum of 186,200 gallons of water in each of the EFW pits is sufficient to supply the required water volume to SGs under all conditions. The basis for 186,200 gallons of water in each of the EFW pits is as follows:

Decay heat during hot standby (8 Hours) and cooldown (6 Hours) : 225,900 gallon

Sensible heat to be removed from hot standby condition to start of residual heat removal	: 62,300 gallon
RCP heat input removal (one pump operation for 14 hours)	: 31,800 gallon
SG water level restore volume (from hot standby to cooldown condition)	: 52,400 gallon
Total required EFW volume	: 372,400 gallon
Required EFW volume per pit	: 186,200 gallon
Total required EFW volume with 10 % margin	: 409,700 gallon
Total required EFW volume with 10 % margin per pit	: 204,850 gallon

During a loss of main feedwater event, the SG water level lowers, and the heat removal capability of the SGs reduces, then the reactor coolant temperature increases and expansion of the reactor coolant results in a pressurizer water level increase. The EFW pump capacity is based on providing sufficient feedwater supply to prevent the reactor coolant discharge from the pressurizer safety valve even when only two EFW pumps and two SGs are available due to single failure of one EFW pump and one SG failure.

The EFW pump capacity established above also satisfies the required feedwater flow to SG to prevent the reactor coolant release from the pressurizer safety valve with loss of the main feedwater due to the main feedwater line break.

The EFW Pump capacities and start times (maximum of 140 seconds for M/D pump and 60 seconds for T/D pump) are established such that the above objectives are met and the EFW Pumps can deliver the required flow for all conditions as given in Tables 10.4.9-2 and 10.4.9-3. Pump head is sufficient to establish the minimum necessary flow rate against the SG pressure corresponding to the first stage main steam safety valve set pressure plus 3% accumulation pressure. The maximum time to start the electric motors and the steam turbines which drive the EFW pumps are chosen so that sufficient flow can be supplied to SGs during the feedwater line break event which can result in reactor core damage. See Section 15.2 for details.

The EFWS is designed to reduce the probability of steam binding. When back leakage from an EFW check valve occurs, high temperature water from the main feedwater line will remain around the check valve resulting in the formation of steam voids which could lead to water hammer. As the leakage continues, the voids may reach the EFW pump casing and suction line creating the possibility for steam binding which would render the EFW pump inoperable. To avoid water hammer and steam binding of the EFW pump, monitoring the EFW discharge line temperature upstream of the EFW check valve will provide early detection of back leakage and allow for prompt corrective action. This is especially important during on-line maintenance that requires the pump discharge tie line to be open increasing the possibility for all EFW pumps to become inoperable. Should leakage be detected when the tie line is open, prompt restoration will be performed by the following procedure.

1. Isolate the relevant line using the EFW isolation valve (EFS-MOV-019), EFW pump outlet manual isolation valve (EFS-VLV-013) and EFW pump discharge cross-connect line isolation valve (EFS-MOV-014).

2. After draining the isolated piping, perform maintenance of the check valve.

3. After check valve maintenance refill the piping and verify that there is no temperature rise at the temperature gauge upstream of the EFW check valve.

Also, in the case 1 train is isolated for the restoration, the condition of the EFWS should be shifted to T-spec 3.7.5 CONDITION B. In this case, it is necessary to complete the restoration within the completion time of 72 hours. In the case restoration cannot be performed within 72 hours, the condition of the EFWS must be shifted to CONDITION C and plant operation condition shall be shifted to MODE 3 within 6 hours, then, it must be shifted to MODE 4 within further 12 hours.

Each EFW pump is located in a separate compartment. Complete physical and electrical separation is maintained for the pump controls, control signals, electrical power supplies, and instrumentation for each EFW pump. The barriers and separation are provided to preclude coincident damage to redundant equipment in the event of a postulated pipe break or missile generation.

The EFWS components including the EFW pits are designed to seismic Category I requirements. The plant design is such that the failure of systems not designed to seismic Category I requirements and located close to essential portions of the EFWS does not preclude operation of the EFWS.

An EFW analysis is performed in accordance with Action Item II.E.1.1 of NUREG-0737 (Reference 10.4-13). The reliability analysis is performed to determine the potential for EFWS failure under various loss of main feedwater transients. The EFWS reliability is determined through probabilistic risk assessment methods. The acceptance criteria of 10^{-4} to 10^{-5} per demand (exclusive of station blackout scenarios) is met. See Chapter 19 for details.

The EFWS is designed to provide sufficient feedwater to the SGs to mitigate loss of all ac power events, including both offsite and onsite ac power supplies (SBO). The turbine-driven EFW pumps are designed to be available for station blackout condition. At a minimum, the plant is designed to withstand the loss of all ac power for at least 8 hours. The plant design capabilities to cope during SBO condition are discussed in Section 8.4.

Conformance to GDC 2 (Reference 10.4-1) assures that the EFWS can withstand the effects of natural phenomena, hence guaranteeing the capability of the system to perform its safety functions. The safety-related portions are protected from the effects of wind and tornado as described in Section 3.3; flood as described in Section 3.4; and seismic events as described in Section 3.7. The guidance provided in US Nuclear Regulatory Commission (NRC), Regulatory Guide (RG) 1.29, Seismic Design Classification (Reference 10.4-9), is used for identifying and classifying those SSC as described in Section 3.2.

Conformance to GDC 4 (Reference 10.4-1) assures that the safety-related components of the EFWS are resistant to the effects of environmental conditions associated with normal operation, maintenance, testing, and postulated accidents, including LOCAs. The design includes suitable protection so that dynamic effects, including internally generated missiles, pipe whipping, and discharging fluids due to equipment malfunctions and external events do not pose a threat to system integrity. The safety-related portions of the EFWS are protected from missiles as described in Section 3.5; against dynamic effects associated with the postulated rupture of piping as described in Section 3.6; and environmental design as described in Section 3.11.

In conformance with GDC 5 (Reference 10.4-1), no EFWS equipment is shared between safety-related units to preclude consequential effects of malfunctioning components within the system.

In conformance with GDC 19 (Reference 10.4-1), a MCR is provided for the control of the US-APWR plant from which actions can be taken to operate the nuclear power plant safely under normal conditions and to maintain it in a safe manner under accident conditions, including LOCAs.

Conformance to GDC 34 (Reference 10.4-1) assures the redundant cooling capacity and pressure relief capability of the EFWS in conjunction with main steam supply system so that the components retain their safety functions in the event of single component failures.

In conformance with GDC 44 (Reference 10.4-1), the EFWS has sufficient redundancy for heat removal in conjunction with the MSS, and is designed to permit appropriate periodic inspection of important components in conformance with GDC 45 (Reference 10.4-1).

In conformance with GDC 46 (Reference 10.4-1), the EFWS is designed to permit appropriate functional testing of the system and components to ensure their structural integrity and leak-tightnes.

The automatic initiation signals and circuits are designed so that their failure does not result in the loss of the ability to manually initiate initiation from the control room in accordance with Regulatory Guide 1.62 (Reference 10.4-16). The engineered safety features system details are provided in Section 7.3.

To conform to the provisions under BTP RSB 5-1 (Reference 10.4-17), the EFWS is designed to seismic Category I standards with the capacity to supply EFW for at least four hours at hot standby followed by a cooldown. During online or offsite power loss coupled with an assumed single component failure, the EFWS is capable of removing residual heat by supplying water for up to 8 hours of hot standby and another 6 hours of plant cooldown until the RHR system resumes operation.

In conformance with ASB 10-1 (Reference 10.4-18), other powered components of the EFWS also use the concept of separate and multiple sources of motive energy, the EFWS possesses diversity in motive power sources such that the system performance requirements are met with either power source (ac or dc); the EFWS therefore satisfies the requirement that the pumps be powered by diverse power sources.

Table 10.4.9-1 Emergency Feedwater System Component Design Parameters (Sheet 1 of 4)

Motor-Driven Emergency Feedwater Pump

Number of pumps	2
Type	Horizontal, centrifugal
Capacity (gpm)	450 (including minimum flowrate)
Total dynamic head (ft)	3,120
Minimum flow rate (gpm)	50
Equipment Class	3
Design Code	ASME Section III, Class 3
Seismic Category	I

Table 10.4.9-1 Emergency Feedwater System Component Design Parameters (Sheet 2 of 4)

Turbine-Driven Emergency Feedwater Pump

Number of pumps	2
Type	Horizontal, centrifugal
Capacity (gpm)	550 (including minimum flowrate)
Total Dymamic Head (feet)	3,120
Minimum Flowrate (gpm)	150
Equipment Class	3
Design Code	ASME Section III, Class 3
Seismic Category	I

Table 10.4.9-1 Emergency Feedwater System Component Design Parameters (Sheet 3 of 4)

Emergency Feedwater Pit (per pit)

Number of pits	2
Pit inside dimensions, L(ft)xW(ft)xH(ft)	28 x 43 x 35
Capacity (gallons)	241,000
Required volume (gallons)	186,200
Seismic Category	I

Emergency Feedwater Control Valves

Number of valves	4
Type	Globe valve
Size (inches)	3
Design pressure (psig)	2,135
Design temperature (°F)	150
Material	Carbon steel
Design Code	ASME Section III, Class 3
Equipment Class	3
Seismic Category	I

Emergency Feedwater Isolation Valves

Number of valves	4
Type	Gate valve
Size (inch)	3
Design pressure (psig)	2,135
Design temperature (°F)	150
Material	Carbon steel
Design Code	ASME Section III, Class 2
Equipment Class	2
Seismic Category	I

Table 10.4.9-1 Emergency Feedwater System Component Design Parameters (Sheet 4 of 4)

Turbine-driven EFW pump main steam-line steam isolation valves

Number of valves	4
Type	Gate valve
Size (inches)	8
Design pressure (psig)	1,185
Design temperature (°F)	568
Material	Carbon Steel
Design Code	ASME Section III, Class 2
Equipment Class	2
Seismic Category	I

Turbine-driven EFW pump actuation valves

Number of valves	4
Type	Globe valve
Size (inches)	8
Design pressure (psig)	1,185
Design temperature (°F)	568
Material	Carbon Steel
Design Code	ASME Section III, Class 3
Equipment Class	3
Seismic Category	I

Table 10.4.9-2 Steam Generator Makeup Flow Requirement

Event	Flow requirement
Feedwater line break	705 (gpm) to 2 SGs.

Table 10.4.9-3 Emergency Feedwater Flow Information for Various Postulated Events

Events		Number of Pumps in Operation	Minimum Flow to the Intact Steam Generator
Loss of main feedwater	non-OLM	All four pumps are running	1600 gpm for 4 SGs.
		3 of 4 emergency feedwater pumps are running	1200 gpm for 3 SGs.
	during OLM, the EFW pump discharge tie line is opened	3 of 4 emergency feedwater pumps are running	1200 gpm for 4 SGs.
		2 of 4 emergency feedwater pumps are running	800 gpm for 4 SGs.
Feedwater line break	non-OLM	All four pumps are running	1200 gpm for 3 SGs.
		3 of 4 emergency feedwater pumps are running (failure of pump in malfunctioning train)	1200 gpm for 3 SGs.
		3 of 4 emergency feedwater pumps are running (failure of pump in intact train)	800 gpm for 2 SGs.
	during OLM, the EFW pump discharge tie line is opened	3 of 4 emergency feedwater pumps are running	1200 gpm for 3 SGs. (The EFW line for the faulty SG is automatically closed)
		2 of 4 emergency feedwater pumps are running	800 gpm for 3 SGs. (The EFW line for the faulty SG is automatically closed)
Plant Cooldown	non-OLM	All four pumps are running	1600 gpm(Note) for 4 SGs.
		3 of 4 emergency feedwater pumps are running	1200 gpm(Note) for 3 SGs.
	during OLM, the EFW pump discharge tie line is opened	3 of 4 emergency feedwater pumps are running	1200 gpm(Note) for 4 SGs.
		2 of 4 emergency feedwater pumps are running	800 gpm(Note) for 4 SGs.

(Note) Initial flow rates to SGs are shown. The flow rates will be decreased to prevent SG overfilling and to keep SG water level.

Table 10.4.9-4 Emergency Feedwater System Failure Modes and Effects Analysis (FMEA) (Sheet 1 of 3)

Components	Failure Mode	Plant Condition	Effect on System Operation	Failure Detection	Remarks
1. **Emergency Feedwater Pump** EFS-MPP-001A,D (Turbine-driben) EFS-MPP-001B,C (Motor-driven) Normally stopped	Failure to start on demand	Loss of Non-emergency AC power Loss of Nominal Feedwater Small Break Loss of Coolant Accident Safe Shutdown	**No effect on safety-related function since:** The three remaining EFW pumps are sufficient for providing EFW to three SGs.	EFW pump operating information: Flow, discharge pressure and pump motor current in MCR Circuit breaker close position light in MCR	The left columns describe the non-OLM case where the EFWS is separated into four trains (EFW pump discharge tie line is closed). For OLM: No effect on safety-related function since at least two pumps are available to operate and at least three SGs can be supplied with EFW by opening the EFW pump discharge tie line during all modes of plant operation assuming that one pump is not available due to maintenance.
		Feedwater System Pipe Break Steam Generator Tube Rupture Safe Shutdown	**No effect on safety-related function since:** Each EFW line is provided with redundant isolation valves that automatically close to isolate the affected SG. This permits the EFW supply to be provided to the three intact SGs by three pumps following the event. In addition, two pumps are available for supplying EFW to the two intact SGs assuming one pump failure.	EFW pump operating information: Flow, discharge pressure and pump motor current in MCR Circuit breaker close position light in MCR	

Table 10.4.9-4 Emergency Feedwater System Failure Modes and Effects Analysis (FMEA) (Sheet 2 of 3)

Components	Failure Mode	Plant Condition	Effect on System Operation	Failure Detection	Remarks
2. T/D-EFW pump actuation valve EFS-MOV-103A,B,C, D normally closed, dc MOVs	Failure to open on demand	Loss of Non-emergency AC power Loss of Nominal Feedwater Small Break Loss of Coolant Accident Safe Shutdown	**No effect on safety-related function since:** The three remaining EFW pumps are sufficient for providing EFW to three SGs.	Valve information: Valve open/close position indication in MCR	The left columns describe the non-OLM case where the EFWS is separated into four trains (EFW pump discharge tie line is closed). For OLM: No effect on safety-related function since at least two pumps are available to operate and at least three SGs can be supplied with EFW by opening the EFW pump discharge tie line during all modes of plant operation assuming that one pump is not available due to maintenance.
		Feedwater System Pipe Break Steam Generator Tube Rupture Safe Shutdown	**No effect on safety-related function since:** Each EFW line is provided with redundant isolation valves that automatically close to isolate the affected SG. This permits the EFW supply to be provided to the three intact SGs by three pumps following the event. In addition, two pumps are available for supplying EFW to the two intact SGs assuming one T/D-EFW pump actuation valve failure.	Valve information: Valve open/close position indication in MCR	
3. EFW control valve EFS-MOV-017A,B,C, D normally opened, dc MOVs	Failure to close on demand	Inadvertent secondary depressurization Feedwater System Pipe Break Steam System Piping Failure Steam Generator Tube Rupture	**No effect on safety-related function since:** The series of this control valves and the isolation valves (EFS-MOV-019A,B,C,D) with redundancy can stop EFW supply to the affected SG (automatically closes upon receipt of signals).	Valve information: Valve open/close position indication in MCR	

Table 10.4.9-4 Emergency Feedwater System Failure Modes and Effects Analysis (FMEA) (Sheet 3 of 3)

Components	Failure Mode	Plant Condition	Effect on System Operation	Failure Detection	Remarks
4. EFW isolation valve EFS-MOV-019A,B,C,D normally opened, dc MOVs These valves are normally positioned to limit the maximum EFW flow	Failure to close on demand	Inadvertent secondary depressurization Feedwater System Pipe Break Steam System Piping Failure Steam Generator Tube Rupture	**No effect on safety-related function since:** The series of this isolation valves and the control valves (EFS-MOV-017A,B,C,D) with redundancy can stop EFW supply to the affected SG (automatically closes upon receipt of signals).	Valve information: Valve open/close position indication in MCR	
5. T/D-EFW pump main steam line steam isolation valve EFS-MOV-101A,B,C,D normally opened, dc MOVs	Failure to close on demand	Loss of Coolant Accident	**No effect on safety-related function since:** Containment boundary remains intact with redundancy provided by this valve, SGs and main steam lines.	Valve information: Valve open/close position indication in MCR	
	Failure to close on demand	Steam Generator Tube Rupture	**No effect on safety-related function since:** Isolation of affected SG is achieved by redundant T/D-EFW pump actuation valves (EFS-MOV-103A,B,C,D).	Valve information: Valve open/close position indication in MCR	

Table 10.4.9-5 Emergency Feedwater System Summary of Indication and Controls

Indication

Parameter	Main control board and remote shutdown console
EFW pump discharge pressure	Y
EFW pump discharge flow	Y
EFW isolation/control valve position	Y
Turbine-driven EFW pump main steam line isolation valve position	Y
Turbine-driven EFW pump actuation valve position	Y
EFW pump discharge tie line isolation valve position	Y
EFW pit level (safety and non-safety)	Y
Motor-driven EFW pump run status	Y
EFW pit level alarms	Y
EFW pump discharge line temperature alarm	Y

Note: Y = Yes

Control

Motor-driven EFW pumps	Y
Turbine-driven EFW pumps	Y
EFW isolation/control valves	Y

Note: Y = Yes

Table 10.4.9-6 Emergency Feedwater System Electric Power Sources

Component	Component Number	Electric Train
A-Emergency feedwater pump (turbine-driven, for inside electrical components)	EFS-MPP-001A	Class 1E dc bus “A”
B-Emergency feedwater pump (motor-driven)	EFS-MPP-001B	Class 1E ac bus “B”
C-Emergency feedwater pump (motor-driven)	EFS-MPP-001C	Class 1E ac bus “C”
D-Emergency feedwater pump (turbine-driven, for inside electrical components)	EFS-MPP-001D	Class 1E dc bus “D”
A-Emergency feedwater control valve	EFS-MOV-017A	Class 1E dc bus “A”
B-Emergency feedwater control valve	EFS-MOV-017B	Class 1E dc bus “B”
C-Emergency feedwater control valve	EFS-MOV-017C	Class 1E dc bus “C”
D-Emergency feedwater control valve	EFS-MOV-017D	Class 1E dc bus “D”
A-Emergency feedwater isolation valve	EFS-MOV-019A	Class 1E dc bus “B”
B-Emergency feedwater isolation valve	EFS-MOV-019B	Class 1E dc bus “A”
C-Emergency feedwater isolation valve	EFS-MOV-019C	Class 1E dc bus “D”
D-Emergency feedwater isolation valve	EFS-MOV-019D	Class 1E dc bus “C”
A-Emergency feedwater pump (turbine-driven) actuation valve on A-steam supply line	EFS-MOV-103A	Class 1E dc bus “A”
A-Emergency feedwater pump (turbine-driven) actuation valve on B-steam supply line	EFS-MOV-103B	Class 1E dc bus “A”
A-Emergency feedwater pump (turbine-driven) A-main steam line steam isolation valve	EFS-MOV-101A	Class 1E dc bus “D”
A-Emergency feedwater pump (turbine-driven) B-main steam line steam isolation valve	EFS-MOV-101B	Class 1E dc bus “D”
D-Emergency feedwater pump (turbine-driven) actuation valve on C-steam supply line	EFS-MOV-103C	Class 1E dc bus “D”
D-Emergency feedwater pump (turbine-driven) actuation valve on D-steam supply line	EFS-MOV-103D	Class 1E dc bus “D”
D-Emergency feedwater pump (turbine-driven) C-main steam line steam isolation valve	EFS-MOV-101C	Class 1E dc bus “A”
D-Emergency feedwater pump (turbine-driven) D-main steam line steam isolation valve	EFS-MOV-101D	Class 1E dc bus “A”

Table 10.4.9-7 Principle Emergency Feedwater System Materials

ESF Component	Material	Class, Grade or Type
Emergency Feedwater Pump		
Pressure casting	SA-351	Grade CF-3 or CF-3M Grade CF-8 or CF-8M
Pressure forgings	SA-182	Grade F304 or F304L/LN Grade F316 or F316L/LN
	SA-266	Grade 2
Tubes and pipes	SA-213 SA-312	Grade TP304 or TP304L Grade TP316 or TP316L
Closure Stud Bolts	SA-193	Grade B6 or B7
	SA-638	G660
Closure Stud Nuts	SA-194	Grade 6 or 7
	SA-564	630
Cladding, Buttering	Type 308L/309L Stainless Steel Strip Electrode	-
Piping	SA-106	Grade B
Valves	SA-105	
	SA-266	Grade 2
	SA-216	Grade WCB
Fitting / Flange	SA-105	
	SA-266	Grade 2
Weld Filler Material	SFA-5.1	E6018, E7018, E6016, E7016
	SFA-5.18	ER70S-2, ER70S-3, ER70S-4, ER70S-6

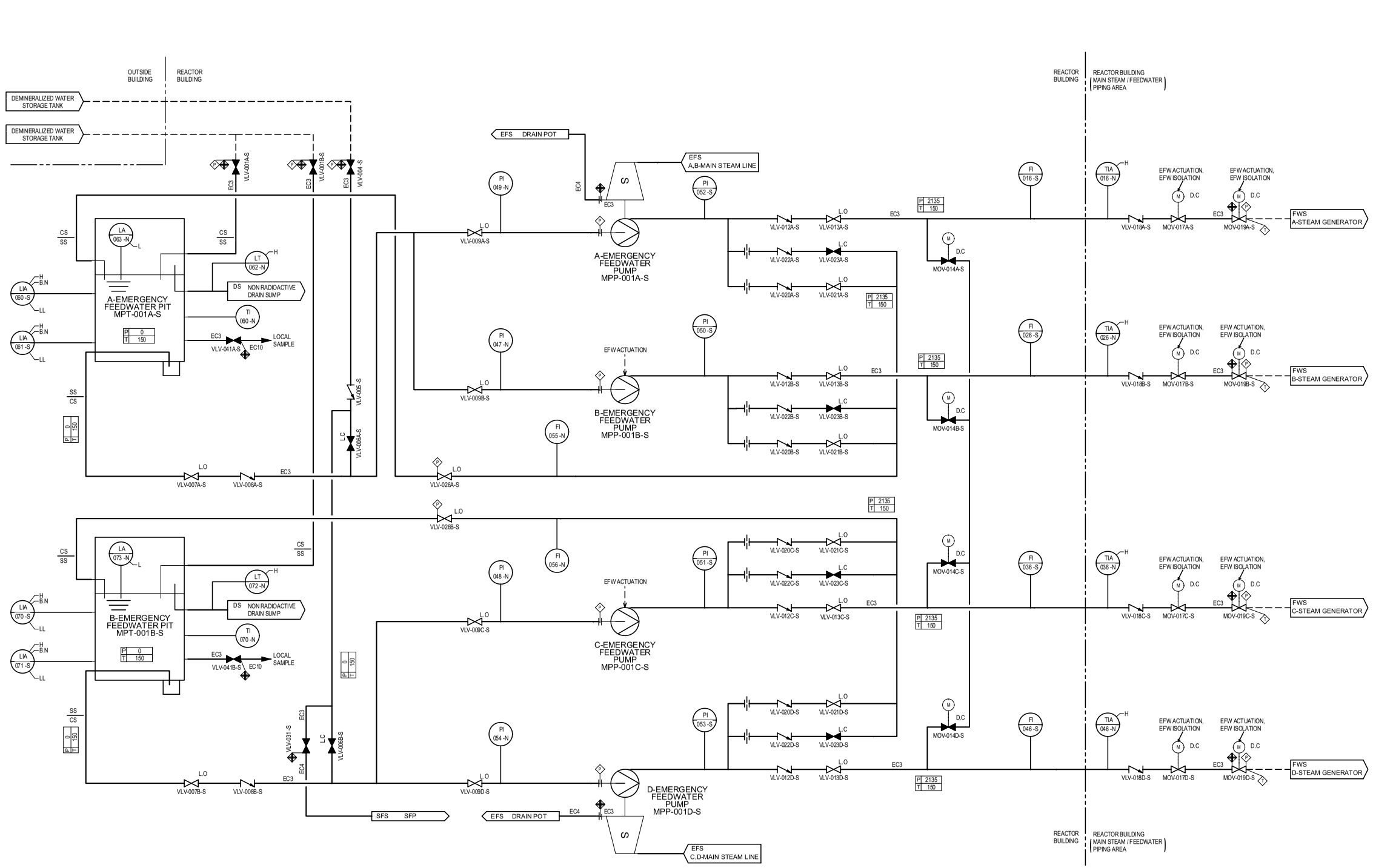

Figure 10.4.9-1 Emergency Feedwater System Piping and Instrumentation Diagram (1/2)

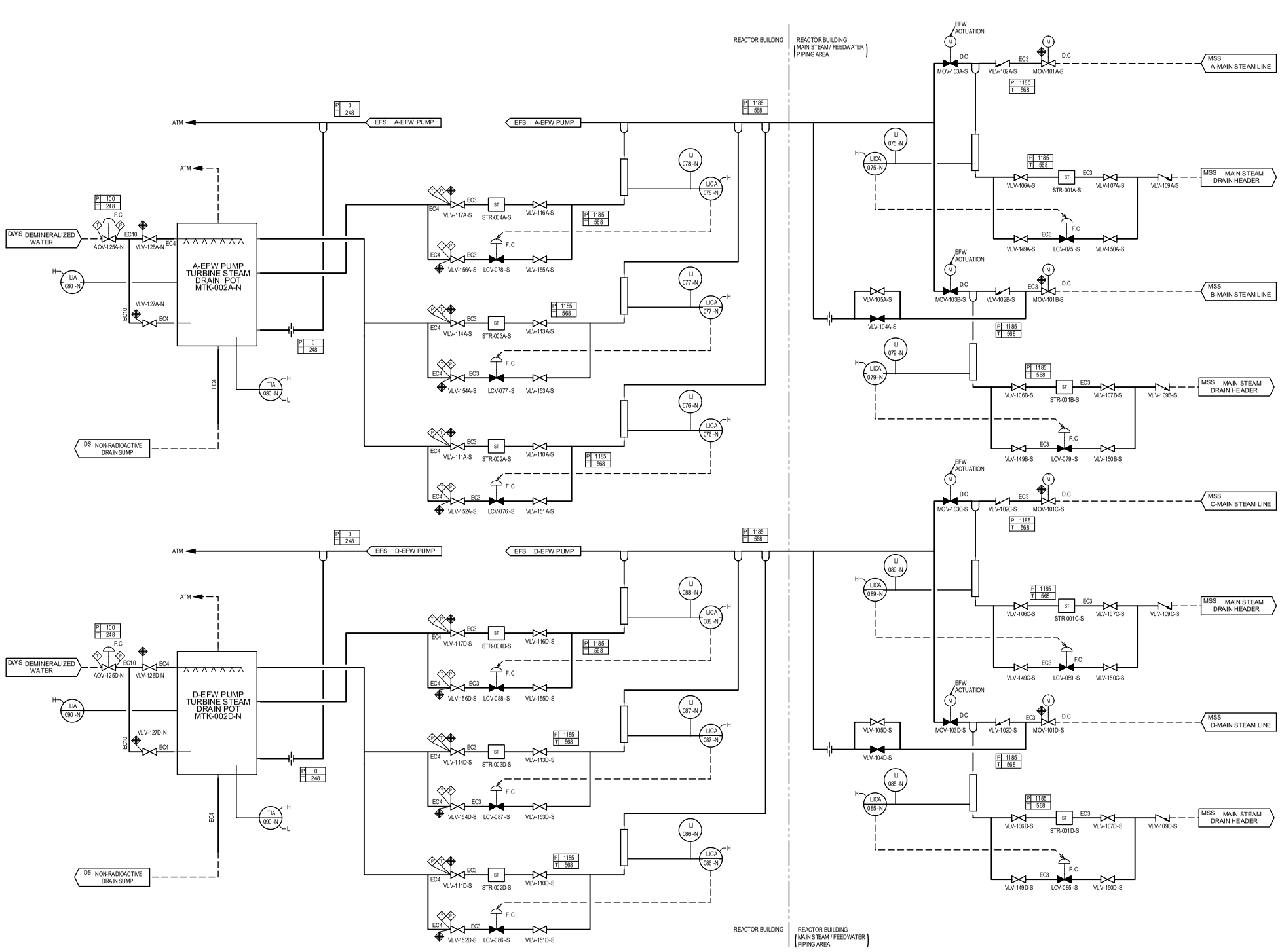

Figure 10.4.9-2 Emergency Feedwater System Piping and Instrumentation Diagram (2/2)

10.4.10 Secondary Side Chemical Injection System

The secondary side chemical injection system (SCIS) feeds required chemicals to control pH and dissolved oxygen content of the feedwater, condensate and steam generator secondary side water. Alkaline pH is maintained in the secondary side with pH controller injection and dissolved oxygen is removed (scavenged) by oxygen scavenger injection.

The SCIS uses the above mentioned high all volatile chemical treatment to prevent corrosion in the secondary loop. The deaerator (Subsection 10.4.7), the condensate polishing system (Subsection 10.4.6), the steam generator blowdown system (Subsection 10.4.8) and the secondary side sampling system (Subsection 9.3.2) also contribute to secondary side water chemistry control.

During continuous operation, chemicals are injected by the SCIS pumps to two addition points: (1) downstream of the condensate polisher and (2) the deaerator.

For layup and clean up operation, pH controller and oxygen scavenger are injected by the SCIS layup pumps to the above two points and two additional points: (1) the steam generator makeup line and (2) the condenser makeup line.

The SCIS includes the chemical addition tanks, injection pumps, bulk chemical system, piping and instrumentation. Figure 10.4.10-1 shows the SCIS Flow Diagram. Table 10.4.10-1 shows design parameters of the SCIS major equipment. The sampling system related to the SCIS is covered in Subsection 9.3.2.

10.4.10.1 Design Bases

10.4.10.1.1 Safety Design Basis

The SCIS does not have a safety-related function and has no safety design basis.

10.4.10.1.2 Non safety Power Generation Design Basis

The secondary side chemical injection system is designed to maintain a noncorrosive condition within the secondary loop. A noncorrosive condition is maintained by controlling pH and dissolved oxygen content in the secondary side: (a) by maintaining alkaline pH with pH controller injection and (b) by scavenging dissolved oxygen with oxygen scavenger injection.

During continuous operation, pH controller is injected into the secondary side to maintain a pH of 9.2 or more. Oxygen scavenger is injected to maintain a residual level of oxygen scavenger. Table 10.4.10-2 shows the approximate concentrations of pH controller and oxygen scavenger that are maintained in the secondary side during different operating modes of the power plant. Secondary water chemistry specifications for US-APWR is followed for all operations including wet layup as described in Subsection 10.3.5.

10.4.10.2 System Description

10.4.10.2.1 General Description

The chemical injection system is shown in Figure 10.4.10-1.

The chemical injection system consists of bulk chemical subsystem and two chemical injection sub-systems: One for pH controller injection for pH control, and the other for oxygen scavenger injection for oxygen removal (scavenging). Each chemical injection subsystem consists of an agitated chemical addition tanks and injection pumps. The SCIS is capable of independently injecting controlled amounts of pH controller and oxygen scavenger.

During continuous operation, dilute pH controller and oxygen scavenger solutions are injected by the injection pumps to two addition points: (1) downstream of the condensate polisher and (2) the deaerator.

Volatile chemicals are mainly depleted in the main condenser. These chemicals are replenished by injecting fresh chemicals into the discharge side of the CPS, at the first injection point.

Some volatile chemicals are also depleted in the deaerator. These depleted chemicals are replenished by injecting fresh chemicals to deaerator, the second injection point. The second injection point is also the final adjustment/control point for the water chemistry of the steam generator feedwater and bulk water.

For layup, dilute pH controller and oxygen scavenger solutions are injected by the layup pumps to four points: (1) downstream of the condensate polisher, (2) the deaerator, (3) the steam generator makeup line and (4) the condenser makeup line.

During wet layup, pH controller and oxygen scavenger are needed to adjust the pH of the water in the secondary side. Typical plant practice during layup is to “soak” the steam generators with chemically treated water to remove “hideout’ contaminants and oxygen, and also to use a feed and bleed or a drain and refill method to reduce impurity levels from the secondary side. The goal for layup is to maintain water purity to prevent affecting normal operation.

The sampling system, which is covered in Subsection 9.3.2, is equipped with continuous analyzers to monitor and control the above and other water quality conditions before each chemical injection point. The sampling system analyzers send data inputs to the chemical injection pump stroke controllers which inject the proper amounts of chemicals. Also, grab sample points are provided for laboratory analysis of these parameters to maintain the continuous analyzers, and to assure that water quality is being maintained through proper amounts of chemical injection.

The SCIS has sufficient capacity for 24 hours of continuous chemical injection at normal feed rates, i.e., chemicals need to be replenished only once per day during normal operation.

The SCIS is controlled by automatic, semi-automatic, or manual mode. All of the SCIS components are located in the turbine building, except the bulk chemical system which is located outdoors.

10.4.10.2.2 Component Description

The SCIS major components are described below and Table 10.4.10-1 provides design parameters for all major SCIS equipment.

10.4.10.2.2.1 pH Controller Addition Tanks with Agitator

In the US-APWR, morpholine and dimethylamine are used as pH controllers during continuous operation. In addition, ammonia is used during layup. Each pH controller has one addition tank with an agitator. Each tank and the agitator are constructed of stainless steel. Dilute solution for each pH controller is prepared in the tank by mixing concentrated solution with demineralized water. Mixing is done by an agitator, which is mounted on the tank top. The addition tank receives concentrated solution from the bulk chemical system, normally once a day to replenish the batch.

Each addition tank has connections for chemical fill, demineralized water, pump suction, pump relief return, vent, drain and instrumentation .

10.4.10.2.2.2 Oxygen Scavenger Addition Tank with Agitator

In the US-APWR, hydrazine is used as oxygen scavenger. One agitated hydrazine addition tank is included in the SCIS. The tank and the agitator are constructed of stainless steel. Dilute hydrazine solution is prepared in the tank by mixing concentrated hydrazine solution with demineralized water. Mixing is done by the agitator, which is mounted on the tank top. The addition tank receives concentrated hydrazine from the bulk chemical system, normally once a day to replenish the batch.

The hydrazine addition tank has connections for chemical fill, demineralized water, pump suction, pump relief return, vent, drain and instrumentation.

10.4.10.2.2.3 pH Controller Injection Pumps for Continuous Operation

Three morpholine injection pumps and three dimethylamine injection pumps for continuous operation are provided in the SCIS. For each pH controller, one pump is dedicated to chemical addition downstream of the condensate polisher and one pump is dedicated to chemical addition to the deaerator. The third pump is a standby pump.

10.4.10.2.2.4 pH Controller Injection Pumps for Layup

For layup, one common injection pump for pH controllers is in included the SCIS.

For layup, each pH controller is injected by the layup pump to four points: (1) downstream of the CPS, (2) the deaerator, (3) the steam generator makeup line and (4) the condenser makeup line.

10.4.10.2.2.5 Oxygen Scavenger Injection Pumps for Continuous Operation

The SCIS includes three hydrazine injection pumps for continuous operation. One pump is dedicated to chemical addition downstream of the CPS and one pump is dedicated for chemical addition to the deaerator. The third pump is a standby pump.

10.4.10.2.2.6 Oxygen Scavenger Injection Pump for Layup

One hydrazine injection pump for layup is in the SCIS.

For layup, hydrazine is injected by the layup pump at four points: (1) downstream of the CPS, (2) the deaerator, (3) the steam generator makeup line and (4) the condenser makeup line.

10.4.10.2.2.7 Bulk Chemical System

The bulk chemical system includes one bulk chemical storage tank, two bulk chemical transfer pumps, and three portable drum pumps.

The bulk chemical storage tank is provided for storage of morpholine and is constructed of 304 stainless steel and has connections for chemical fill from a bulk chemical supply truck, pump suction, pump return, vent drain and instrumentation.

The bulk chemical transfer pumps are provided (one is a spare) for the transfer of morpholine from the bulk chemical storage tank to the chemical addition tank.

The portable drum pumps are provided for the dispensing of hydrazine, dimethylamine (DMA) and ammonia from chemical totes to the chemical addition tanks.

10.4.10.2.2.8 Piping, Valves and Instruments

The SCIS piping and valves are constructed of stainless steel. Piping, valves and in-line instruments located on the discharge side of the pumps are designed to withstand the maximum discharge pressure of the pumps. All SCIS major instruments are described in Subsection 10.4.10.5.

10.4.10.2.3 System Operation

The SCIS operation is described below under two operating modes: (1) continuous SCIS operation and (2) SCIS operation during layup. The SCIS feeds the required amounts of pH controller and oxygen scavenger to control the pH level and dissolved oxygen content of the steam condensate, feedwater and steam generator water during:

- Power operation
- Plant startup
- Cleanup

- Plant operation during condenser tube leak (an abnormal condition)

Table 10.4.10-2 shows the secondary side water chemistry that is maintained by the SCIS during the above operating modes. During power operation, as shown in Table 10.4.10-2, the CPS is not in use i.e., is 100% by-passed. During plant startup, the above table shows that all condensate is treated through the CPS. When cleanup of the condensate is required, either prior to startup, after cold shutdown or due to any other reason, 33% of the condensate is treated through the CPS. During condenser tube leak operation, all condensate is treated through the CPS.

Volatile chemicals (pH controller and oxygen scavenger) are mainly depleted in the main condenser and deaerator, and pH controller is removed by CPS and SGBD demineralizer. The depleted pH controller and oxygen scavenger are replenished by injecting fresh chemicals downstream of the CPS and to the dearator.

Bulk chemicals are transferred from the bulk chemical system to the chemical addition tanks. Dilute chemical solutions are prepared in the chemical addition tanks by mixing with demineralized water. Mixing is done by an agitator, which is mounted on the tank top.

10.4.10.2.3.1 Continuous Operation

During continuous operation, the SCIS operates two of three injection pumps for each pH controller. These pumps draw diluted pH controller solution from the addition tank. One pump is used for chemical addition to downstream of the CPS and a second pump is for chemical addition to the deaerator. The third pump is a standby pump.

The pH controller and oxygen scavenger injection pumps stroke is adjusted automatically based on the residual pH controller and oxygen scavenger concentration level inputs from the pH controller and oxygen scavenger analyzers, which are part of the sampling system.

The chemical addition tanks have level transmitters that display continuously the tank level, locally and at the control room. On a low level alarm, the operator initiates either automatic or manual preparation of a new batch. For automatic operation, adequate instrumentation is provided, which is programmed in the Digital Control System for preparation of dilute batch solution by adding controlled amounts of concentrated chemical and water in the chemical addition tank. Subsection 10.4.10.5, Instrumentation Applications, provides a detailed description of the instruments that are used to run the SCIS automatically. Preparation of the dilute solution can also be done by the operator manually or semi-automatically.

10.4.10.2.3.2 Layup

During layup, the chemical injection pump is under manual control to feed chemicals to the secondary side based on the results of grab samples.

One common injection pump for pH controllers is included in the SCIS. During wet layup, pH controllers are needed for pH adjustment of the water in the secondary side. Typical plant practice during layup is to “soak” the steam generators with chemically treated water

to remove 'hideout' contaminants and oxygen, and also to use a feed and bleed or a drain and refill method to reduce impurity levels from the secondary side.

For layup, pH controllers are injected by the layup pump to four points: (1) downstream of the CPS, (2) the deaerator, (3) the steam generator makeup line and (4) the condenser makeup line. The pH controller layup pump and the oxygen savanger layup pump discussed below are interconnected to serve as spares for each other.

For layup, oxygen scavenger is injected by the layup pump to four points: (1) downstream of the CPS, (2) the deaerator, (3) the steam generator makeup line and (4) the condenser makeup line.

10.4.10.3 Safety Evaluation

Because the SCIS has no safety design basis, no safety evaluation is provided.

10.4.10.4 Tests and Inspections

All active components of the SCIS are accessible for inspection during plant operation. The SCIS is tested before plant startup in accordance with Chapter 14 requirements.

The performance along with structural and leak-tight integrity of all system components are demonstrated by continuous operation.

The SCIS injection pumps and instruments are calibrated and maintained periodically to ensure the proper functioning of all components.

10.4.10.5 Instrumentation Applications

The following instrumentation is provided for manual, semi-automatic and automatic control of the SCIS during all modes of plant operations except layup. Chemical injections during wet layup are manually controlled based on the analytical results of grab samples.

a. Chemical Addition Tanks Level Transmitters

Each chemical addition tank level is measured and indicated locally and in the main control room. On high-level alarm, influent line valves are closed automatically to prevent overfill. The level transmitter indications aid the operator in determine the proper amounts of chemicals and demineralized water to add to in the chemical addition tanks. On low level alarm from the transmitter, the operator is notified to prepare new batch, i.e., to add chemical and water to the addition tanks.

b. Chemical Addition Tanks Level Switches

Each chemical addition tank has high and low level switches. On low level alarm the injection pumps trip (shut down). On high level alarm, the common influent line valve on the tank top is closed automatically as a backup protection against overfill.

c. Demineralized Water Flow Indication and Totalizer

Demineralized water flow is measured and totalized. Water amounts and the bulk chemical amounts, measured by item (d) below instruments, are controlled to make necessary dilution of the bulk chemicals.

As mentioned before, the level indicating transmitters in the addition tanks provide additional data to help prepare the diluted chemical batches.

d. Bulk Chemicals Flow Indications and Totalizers

The amount of concentrated pH controller and oxygen scavenger bulk chemical, added to each of the addition tanks, are measured and totalized. Data are shown locally and also transmitted to the indication in the main control room.

e. Chemical Injection Pumps Stroke Control

The pH controller injection pumps stroke is adjusted automatically based on pH level and conductivity data inputs from the pH and conductivity analyzers, which are part of the sampling system.

The oxygen scavenger injection pumps stroke is adjusted automatically based on the residual oxygen scavenger concentration inputs from the oxygen scavenger analyzers, which are part of the sampling system.

f. Automatic Valves for the SCIS

The SCIS contains a number of automatic on/off valves, as shown on the Figure 10.4.10-1, for its operation in an automatic, semi-automatic or manual mode. Each valve has a pneumatic operator, position indication and two (2) limit switches.

g. Chemical Injection Pumps Pressure Transmitters

Each chemical injection pump and bulk chemical transfer pump has a pressure indicating transmitter on the pump discharge side for local and remote indication of the pump discharge pressure. Pump discharge pressure monitoring is necessary for trouble shooting and pump maintenance.

h. Bulk Chemical Storage Tank Level Transmitter

The bulk chemical storage tank level is measured and indicated locally and in the main control room. On high-level alarm, influent line valve closes automatically to prevent overfill.

i. Bulk chemical Storage Tank Level Switches

The bulk chemical storage tank has a level switch low and a level switch high. On low-level alarm, the transfer pumps trips (shut down). On high-level alarm, the influent line valve on the tank top closes automatically as a protection against overfill.

Table 10.4.10-1 Major Equipment Design Parameters (Sheet 1 of 3)

pH Controller Addition Tank with Agitator

Ammonia Addition Tank with Agitator	
Number of tanks	1
Type	Vertical
Materials	Stainless steel
Morpholine Addition Tank with Agitator	
Number of tanks	1
Type	Vertical
Dimetyleamine Addition Tank with Agitator	
Number of tanks	1
Type	Vertical

Oxygen Scavenger Addition Tank with Agitator

Hydrazine Addition Tank with Agitator	
Number of tanks	1
Type	Vertical
Materials	Stainless

Table 10.4.10-1 Major Equipment Design Parameters (Sheet 2of 3)

pH Controller Injection Pumps for Continuous Operation

Morpholine Injection Pumps for Continuous Operation	
Number of pumps	3
Type	Double diaphragm, simplex

Dimetylamine Injection Pumps for Cotinuous Operation	
Number of pumps	3
Type	Double diaphragm, simplex

Oxygen Scavenger Injection Pumps for Continuous Operation

Hydrazine Injection Pumps for Continuous Operation	
Number of pumps	3
Type	Double diaphragm, simplex

pH controllers common Injection Pump for Layup

Common Ammonia / Morpholine / DMA Injection Pump for Layup	
Number of pumps	
Type	Double diaphragm, simplex

Oxygen Scavenger Injection Pump for Layup

Hydrazine Injection Pump for Layup	
Quantity	1
Type	Double diaphragm, simplex

Table 10.4.10-1 Major Equipment Design Parameters (Sheet 3of 3)

Bulk Chemical System

Morpholine Storage Tank	
Number of pumps	1
Type	API

Morpholine Transfer Pumps	
Number of pumps	2
Type	Double diaphragm, simplex

Table 10.4.10-2 Secondary Side Water Chemistry

Operating mode	CPS operation	Percent (%) of condensate flow thru CPS	Morpholine / DMA concentration in secondary side, (ppb)	Hydrazine concentration in secondary side, (ppb)
Power operation	Bypass CPS	0	35,000≤ / 800 — 1200	200
Condenser tube leak operation	CPS is in operation	100	35,000≤ / 800 — 1200	First 1 hr: 200 After 1 hr: 250
Cleanup	CPS is in operation	33	35,000≤ / 800 — 1200	250
Startup	CPS is in operation	33	35,000≤ / 800 — 1200	250

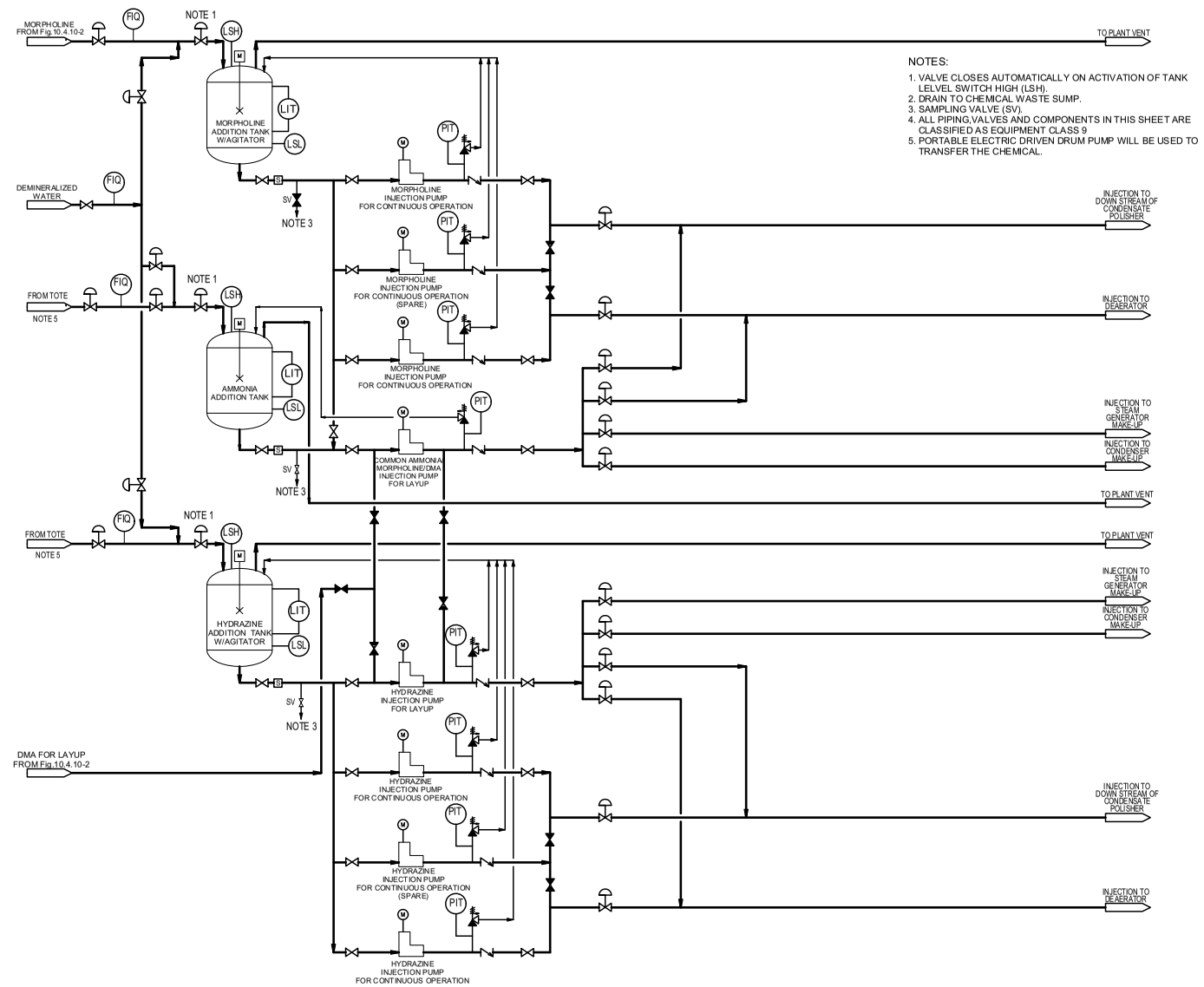

Figure 10.4.10-1 Secondary Side Chemical Injection System Piping and Instrumentation Diagram

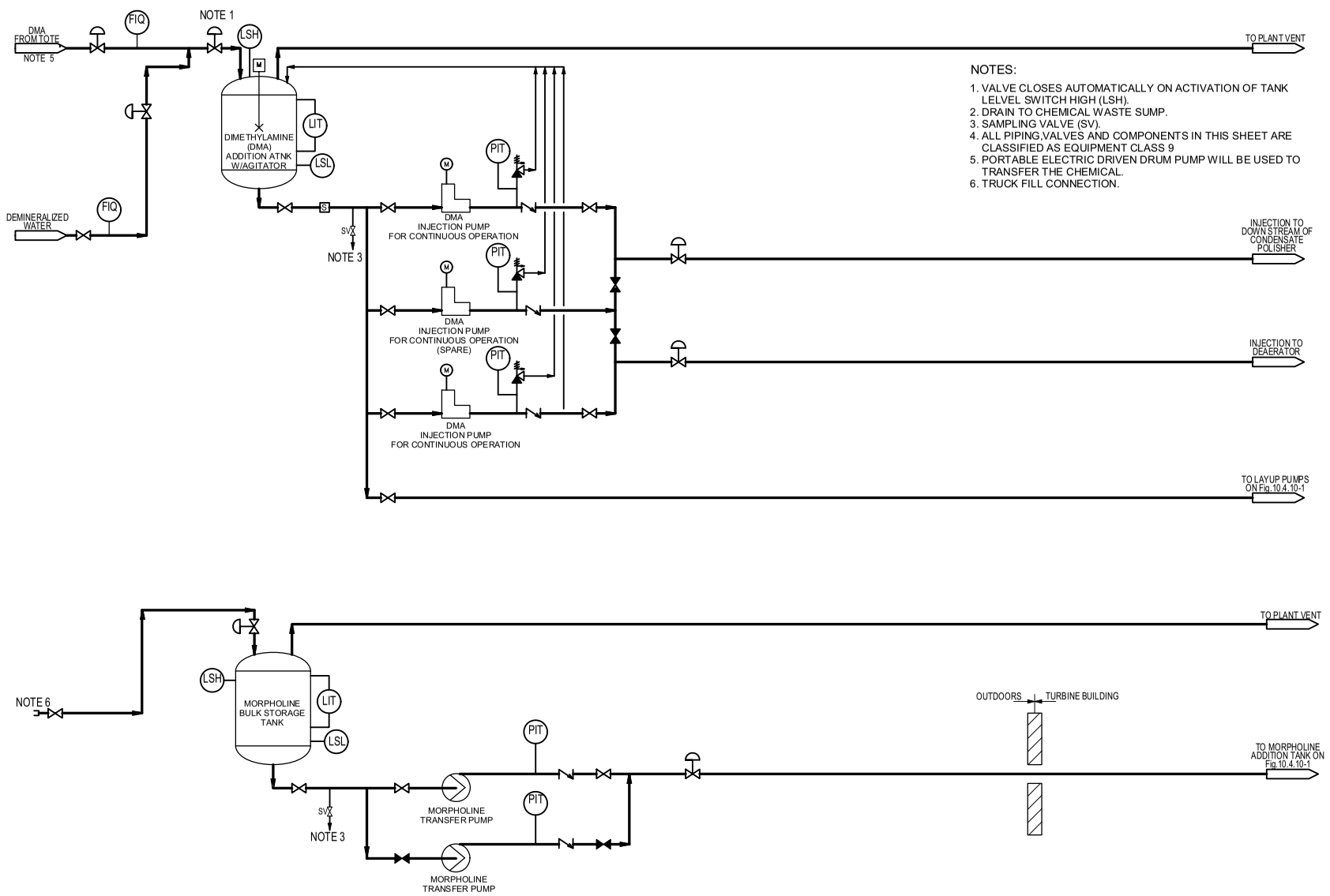

Figure 10.4.10-2 Secondary Side Chemical Injection System Piping and Instrumentation Diagram

10.4.11 Auxiliary Steam Supply System

The auxiliary steam supply system (ASSS) supplies the auxiliary steam required for plant use during plant startup, shutdown, and normal operation. Steam is supplied from either an auxiliary boiler or main steam.

10.4.11.1 Design Bases

10.4.11.1.1 Safety Design Bases

The ASSS has no safety-related function and therefore has no nuclear safety design basis.

10.4.11.1.2 Power Generation Design Basis

The ASSS has the functions as shown below:

- During plant normal operation, the ASSS supplies auxiliary steam to the components of primary system or HVAC system by taking the part of the main steam. Then the system transfers the condensed water from these components to the condenser to use the water as the steam again.

- During plant startup, shutdown and plant regular inspections, main steam is not available; the auxiliary steam from the auxiliary boiler is supplied to the components of the primary system, HVAC system and secondary system. The condensed water from the primary or HVAC system components are collected to the auxiliary boiler and used as auxiliary steam again, and the auxiliary steam sent to the secondary system is collected to the condenser or Condensate and Feedwater System (CFS).

- The auxiliary steam drain monitors the leakage of the radioactive materials from the boric acid evaporator to the condensed water of the ASSS.

10.4.11.2 System Description

10.4.11.2.1 General Description

The ASSS piping and instrumentation diagram is shown in Figure 10.4.11-1.

The system includes a control valve to reduce the main steam pressure, auxiliary boiler package, auxiliary steam drain tank, auxiliary steam drain pump, auxiliary steam drain monitor, auxiliary steam drain monitor heat exchanger, condensed water piping and other components.

The components served by the system are categorized into two groups.

Group I components are shown below. For operation as required during startup, shutdown, plant regular inspection and normal operation, the auxiliary steam from the auxiliary boiler or main steam is supplied to the components continuously or intermittently.

Condensed water from these components is collected in the auxiliary steam drain tank and then, by using the auxiliary steam drain pump, is transferred to the condenser during plant normal operation, or to the auxiliary boiler during the period in which the main steam is not available.

- Boric acid (B/A) evaporator
- B/A batching tank
- Non safety-related HVAC equipment

The ASSS supplies steam for plant system heating when main steam is not available. The auxiliary boiler takes condensate makeup from the auxiliary steam drain tank inside the A/B, or from the condensate storage tank (CST) in the yard. The auxiliary boiler is located in the yard near the plant area. The condensate piping from the ASSS drain tank is a single-walled carbon steel pipe run above ground in pipe chases from A/B to the T/B, and is then connected to double-walled welded carbon steel piping through the T/B wall penetration to the auxiliary boiler. Since this is not a high traffic area, this segment of pipe is run above ground and is slightly sloped so that any leakage is collected in the outer pipe and drained to the auxiliary boiler building. At the auxiliary boiler building end, a leak detection instrument is provided to monitor leak. A drain pipe is provided to direct any drains to the building sump. The steam piping is jacketed with insulation and heat protection. This design is supplemented by operational programs which includes periodic hydrostatic or pressure testing of pipe segments, instrument calibration, and when required, visual inspection and maintenance of piping, trench and instrument integrity.

A discussion of the radiological aspects of the system leakage is contained in DCD Section 11.1. Design and system features addressing RG 4.21 are captured in Section 12.3.1.3 of the DCD.

Monitoring the leakage from the primary side of the evaporator, the radiation monitor is attached to the downstream of the auxiliary steam drain pump. The high alarm of the monitor isolates the pump discharge line and steam supply line from main steam and trips the pump.

Group II components served by the system are shown below. These components are supplied auxiliary steam from the auxiliary boiler during plant startup, shutdown or regular inspections due to unavailable of the main steam.

- Turbine gland seal
- Deaerator seal
- Deaerator heating

The auxiliary steam for group II components are collected to the turbine cycle.

10.4.11.2.2 Component Description

Auxiliary steam drain tank

The auxiliary steam drain tank collects the condensed water from group I components.

Auxiliary steam drain tank pump

The auxiliary steam drain pump transfers the condensed water from the group I components to the condenser during plant normal operation or to the auxiliary boiler in situations in which main steam is not available.

The pumps are actuated by the high water level signal of the tank, and then stopped by the low signal. The pumps are also tripped by the auxiliary steam drain monitor high alarm. Two pumps are used by the system, another one is a spare.

Auxiliary steam drain monitor heat exchanger

The auxiliary steam drain monitor heat exchanger keeps the temperature of condensed water from the components below the allowable monitor temperature.

Auxiliary boiler package

The auxiliary boiler package supplies the auxiliary steam to the group I or II components when main steam is not available. One auxiliary boiler package is installed to per unit.

10.4.11.2.3 System Operation

During startup, shutdown and plant regular maintenance

The steam generated by the auxiliary boiler is supplied to the group I, II components when main steam is not available. Demineralized water, as feedwater to the auxiliary boiler, is provided from the Condensate Storage Facility to the auxiliary boiler. Condensed water from the group I components is collected in the auxiliary steam drain tank, and the water is transfered to the auxiliary boiler by the auxiliary drain pump.

During plant normal operation

Auxiliary steam from main steam is supplied to the group I components.

Leakage of radioactive materials from primary side in the B/A evaporator

If there is leakage of radioactive materials from the primary side in the B/A evaporator, the auxiliary steam drain tank pump discharge isolation valve is closed and the auxiliary steam drain pumps are tripped by the auxiliary steam drain monitor high alarm. The high signal is alarmed to the main control room.

10.4.11.3 Safety Evaluation

The ASSS has no safety-related function and therefore requires no nuclear safety evaluation.

10.4.11.4 Tests and Inspections

Components of the system are monitored during operation to ensure satisfactory performance.

Periodic operation of all equipment is utilized for additional inspection, checkout, and maintenance.

10.4.11.5 Instrumentation Applications

The ASSS is provided with the necessary controls and indications for local or remote monitoring of system operation.

A temperature gauge is installed at the inlet of the auxiliary steam drain monitor. When the condensed water temperature through the monitor reaches the monitor line high temperature set point, the auxiliary steam drain monitor inlet stop valve is closed and the monitor is protected. High temperature is alarmed in the main control room.

The radiation monitor is provided to monitor the leakage of radioactive materials in the condensed water from the B/A evaporator. When the concentration of radioactive material exceeds the set point, the auxiliary steam drain tank pump discharge isolation valve is closed and auxiliary steam drain tank pump is stopped. High radiation is alarmed in the main control room.

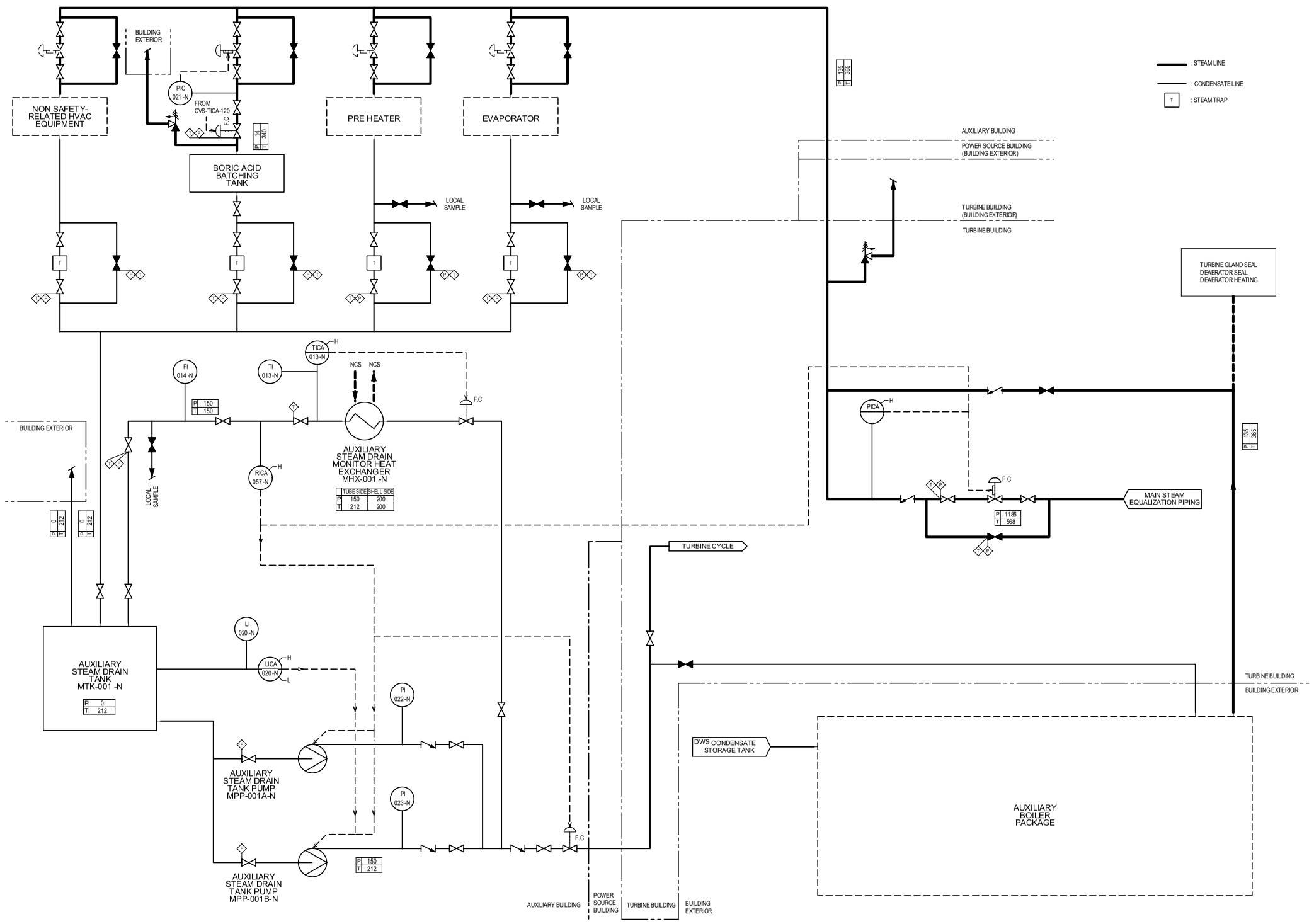

Figure 10.4.11-1 Auxiliary Steam Supply System Piping and Instrumentation Diagram

10.4.12 Combined License Information

COL 10.4(1) Circulating Water System

The Combined License Applicant is to determine the site specific final system configuration and system design parameters for the CWS including makeup water and blowdown.

COL 10.4(2) Steam Generator Blowdown System

The Combined License applicant is to address the discharge to Waste Water System including site specific requirements.

COL 10.4(3) Deleted.

COL 10.4(4) Deleted.

COL 10.4(5) System Design for Steam Generator Drain

The Combined License applicant is to address the nitrogen or equivalent system design for Steam Generator Drain Mode. (This is dependent on Waste water system design)

COL 10.4(6) Operating and maintenance procedures for water hammer prevention

The Combined License Applicant is to provide operating and maintenance procedures in accordance with NUREG-0927 and a milestone schedule for implementation of the procedure.

10.4.13 References

10.4-1 General Design Criteria for Nuclear Power Plants, NRC Regulations Title 10, Code of Federal Regulations, 10 CFR Part 50, Appendix A.

10.4-2 The Heat Exchange Institute, Standards for Steam Surface Condensers, Addendum 1 to 9th Edition, 2002.

10.4-3 Power Piping, ASME B31.1.

10.4-4 The Heat Exchange Institute, Performance Standards for Liquid Ring Vacuum Pumps.

10.4-5 Hydraulic Institute, Hydraulic Institute Standards for Centrifugal, Rotary and Reciprocating Pumps, December, 2000.

10.4-6 American Water Works Association, Rubber-Seated Butterfly Valves, ANSI/AWWA C504.

10.4-7 [[Power Test Code for Atmospheric Water Cooling Equipment, ASME PTC 23, 2003.]]

10.4-8 Rules for Construction of Nuclear Facility Components, ASME Boiler and Pressure Vessel Code. Division 1, Section III, 2001 Edition with 2003 Addenda.

10.4-9 SEISMIC DESIGN CLASSIFICATION, Regulatory Guide 1.29 Rev.4, March 2007.

10.4-10 U.S. Nuclear Regulatory Commission, Evaluation of Water Hammer Occurrence in Nuclear Power Plants, NUREG-0927, Revision 1, in March 1984.

10.4-11 U.S. Nuclear Regulatory Commission, DESIGN GUIDELINES FOR AVOIDING WATER HAMMERS IN STEAM GENERATORS REVIEW RESPONSIBILITIES, NUREG-0800 Branch Technical Position 10-2.

10.4-12 Rules for Inservice Inspection of Nuclear Power Plant Components, ASME Boiler and Pressure Vessel Code, Section XI, Division 1.

10.4-13 U.S. Nuclear Regulatory Commission, Clarification of TMI Action Plan Requirements, NUREG-0737.

10.4-14 U.S. Nuclear Regulatory Commission, Generic Evaluation of Feedwater Transients and Small Break Loss-of-Coolant. Accidents in Westinghouse - Designed Operating Plants, NUREG-0611, January 1980.

10.4-15 Requirements for reduction of risk from anticipated transients without scram (ATWS) events for light-water-cooled nuclear power plants, 10 CFR Part 50.62.

10.4-16 Manual Initiation of Protective Actions, Regulatory Guide 1.62 Rev.0, October 1973.

10.4-17 U.S. Nuclear Regulatory Commission, DESIGN REQUIREMENTS OF THE RESIDUAL HEAT REMOVAL SYSTEM, NUREG-0800 Branch Technical Position RSB 5-1.

10.4-18 Design Guidelines for Auxiliary Feedwater System Pump Drive and Power Supply Diversity for Pressurized Water Reactor Plants, NUREG-0800 Branch Technical Position BTP 10-1.

10.4-19 Deleted

10.4-20 Minimization of Contamination and Radioactive Waste Generation: Life-Cycle Planning. RG 4.21, Rev.0, U.S. Nuclear Regulatory Commission, Washington, DC, June 2008.