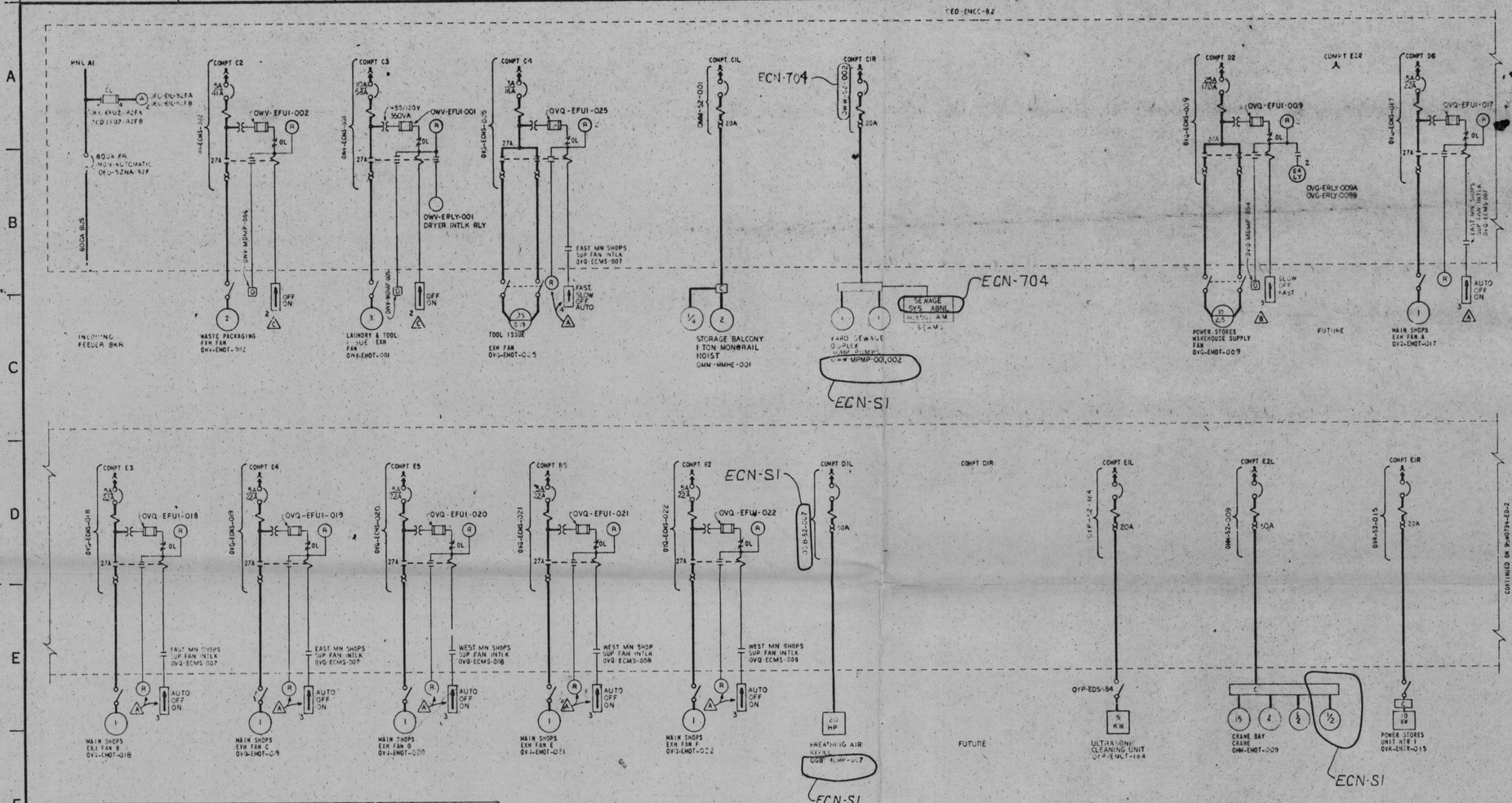

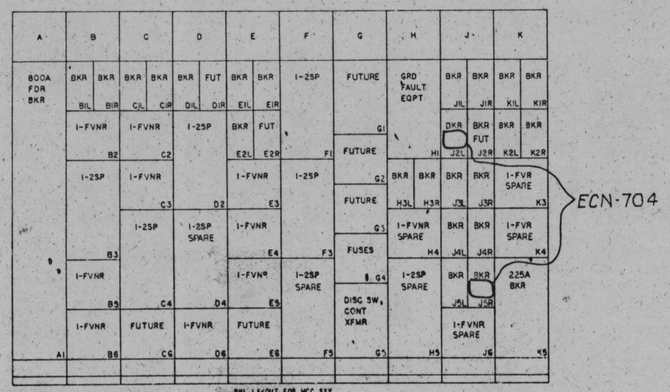

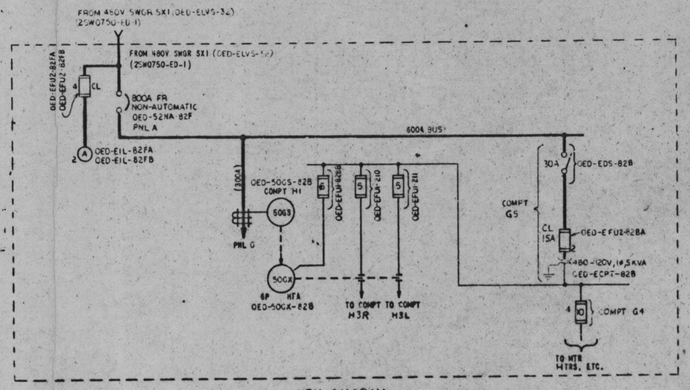

REFERENCE DRAWINGS	
DWG. NO.	TITLE
2SW0720-RP-1	PLANT AC AUX PWR SYS SINGLE LINE
2SW0750-ED-1	480V [illegible] SINGLE LINE
9SW0749-1-4	SCHEMATICS SERIES
9SW0747-RP	TYP. MCC SCHEMATIC

* = SYSTEM NUMBER

NOTES:

1. 480V MCC PROVIDED ON CONTRACT NO 76K5-86242
2. THE FOLLOWING UNIQUE SCHEME SHALL BE USED TO IDENTIFY THE MCC SWITCHGEAR AND DEVICE DESIGNATION.

X XX - XXXX - XXXX - X

- SEPARATION DESIGNATION (WHERE APPLICABLE)
- SPECIFIC COMPONENT IDENTIFIER (LISTED ON THIS DRAWING WITH DEVICE SYMBOL)
- COMPONENT FUNCTION DESIGNATION (LISTED ON THIS DRAWING WITH DEVICE SYMBOL)
- SYSTEM DESIGNATION
- GENERATING UNIT DESIGNATION

EACH DEVICE ASSOCIATED WITH THE MOTOR CONTROL CENTER-BUS AUXILIARY CONTROL POWER TRANSFORMER, MAIN SUPPLY OR SPARE CIRCUIT BREAKER IS PART OF THE 480V NORMAL AC AUXILIARY POWER DISTRIBUTION SYSTEM WITH SYSTEM DESIGNATION ED.

3. ALL MOLDED CASE CIRCUIT BREAKERS ARE 3-POLE, 600V WITH AN INTERRUPTING RATING OF NOT LESS THAN 25,000 SYMMETRICAL RMS AMPS AT 480V. ALL CIRCUIT BREAKERS ARE 100A FRAME EXCEPT AS NOTED. FOR CIRCUIT BREAKERS SHOWN WITH SHUNT TRIP THE SHUNT COIL TRIP VOLTAGE SHALL BE 55 % OF THE RATED VOLTAGE OF THE COIL.
4. ALL COMBINATION MOTOR STARTERS WILL UTILIZE CIRCUIT BREAKERS WITH ADJUSTABLE MAGNETIC TRIP SETTINGS. ALL OTHER CIRCUIT BREAKERS HAVE THERMAL MAGNETIC TRIP.
5. ALL MOTOR STARTERS SHALL BE PROVIDED WITH 3 ELECTRICALLY SEPARATE AUXILIARY CONTACTS.
6. ALL SINGLE COMPARTMENT CONTROL TRANSFORMERS ARE 0.490-120V (50)VA WITH GROUNDED SECONDARY UNLESS OTHERWISE NOTED, BLOWS 1.5 AMP EXCEPT AS NOTED.
7. A 120V RED INDICATING LIGHT TO BE PROVIDED IN COMPARTMENTS SHOWN AND PARALLELED WITH THE STARTER COIL.
8. GROUND FAULT PROTECTION (50GS) FOR INDIVIDUAL LOADS SHOWN SHALL BE SET TO PICKUP AT APPROXIMATELY 10 AMPS PRIMARY CURRENT WITH NO INTENTIONAL TIME DELAY.
9. UNLESS OTHERWISE SHOWN ALL COMPONENTS EXTERNAL TO THE MOTOR CONTROL CENTER ARE ASSIGNED UNIQUE IDENTIFICATION NUMBERS AS SHOWN IN PARENTHESIS UNDER SYMBOLS WHERE "XXX" INDICATES DIGITS THAT ARE THE SAME AS THOSE SHOWN FOR THE LOAD.

SYMBOLS

- D - - - - MOTOR OPERATED DAMPER
- C - - - - CONTROL SUPPLIED BY OTHERS
- R - - - RED LIGHT (XXX-EIL-XXX)
- MAG TRIP ONLY (BR)
- K - CONTINUOUS CURRENT TRIP
- Y - TRIP SETTING
- - - - - DISCONNECT SWITCH (XXX-EDS-XXX)
- - - - - HAND INDICATING SWITCH (XXX-EHIS-XXX)
- - - - - THERMOSTAT (XXX-ETH-XXX)

△1 LOCATED ON CONTROL PNL IN CRAFT FORMANS OFFICE

△2 LOCATED IN ROOM OR AREA SERVED

△3 LOCATED NEAR FAN OR EQUIPTMENT CONTROLLED

REV NO	ECN NO.	DATE	DSGN	DRWN	CHKD	SUPV	ENGR	INSP	NUCR	RECR	APPR
4	704, SI	[illegible]	[illegible]	[illegible]	[illegible]	[illegible]	[illegible]				
3	571, 783, 13	[illegible]	[illegible]	[illegible]	[illegible]	[illegible]	[illegible]				
2	334, SI	[illegible]	[illegible]	[illegible]	[illegible]	[illegible]	[illegible]				

ECN-704 ADD SEWAGE SYS DUPLEX SUMP PUMPS ECN-SI MINOR CHANGES

ECN-571 CHGS DUE TO MFHR INFO, ECN-463 ADD VEHICLE BARRIER

ECN-SI MINOR CHANGES
UPDATE TO SHOW LATEST COMPT ASSIGNMENTS & VENDOR AS CONSTRUCTED CHANGES.
ECN 30 REV TO SHOW CHGS IN GENERAL ARRANGEMENT OF SHOPS DWGS & REV UNID NOS.
ECN 82 REVISE TO SHOW LATEST BUILDING DESIGN REQUIREMENTS. ECN-139 REVISE TO SHOW LATEST FAN HP RATINGS, UNID NOS, & BAR TRIP SETTINGS. ECN 122 ADD ONE TON MONORAIL HOIST TO STORAGE BALCONY.

DSGN T.A. DENNIE
DRWN
CHKD
SUPV
INSP
ENGINEER

SERVICE & OFFICE BUILDING
UNIT 1 & 2

SINGLE LINE
480 V MCC SXY
OED-EMCC-82

BELLEFONTE NUCLEAR PLANT
TENNESSEE VALLEY AUTHORITY
DIVISION OF ENGINEERING DESIGN

N

SUBMITTED	RECOMMENDED	APPROVED
[signature]	[signature]	[signature]

KNOXVILLE 12-20-74

88 E 9SW0734-ED-1 A4

RECORD DRAWING AS CONSTRUCTED

Docket # 50-438, 439
Control # 830405036
Date 4-25-83 of Document:
REGULATORY DOCKET FILE

PRC APERTURE CARD

COMPANION DWGS: 9SW0734-ED-2,3

INSPECTED AND APPROVED FOR ISSUE
DESIGN PROJECT MANAGER