REFERENCE DRAWINGS	
DRAWING NO	TITLE
2XW717-EG-1	6900V SWGR 1ET2-A, -B SINGLE LINE
9XW732-EI-1,2	480V MCC 1E3-A SINGLE LINE
9XW732-EI-1,2	480V MCC 1E3-B SINGLE LINE

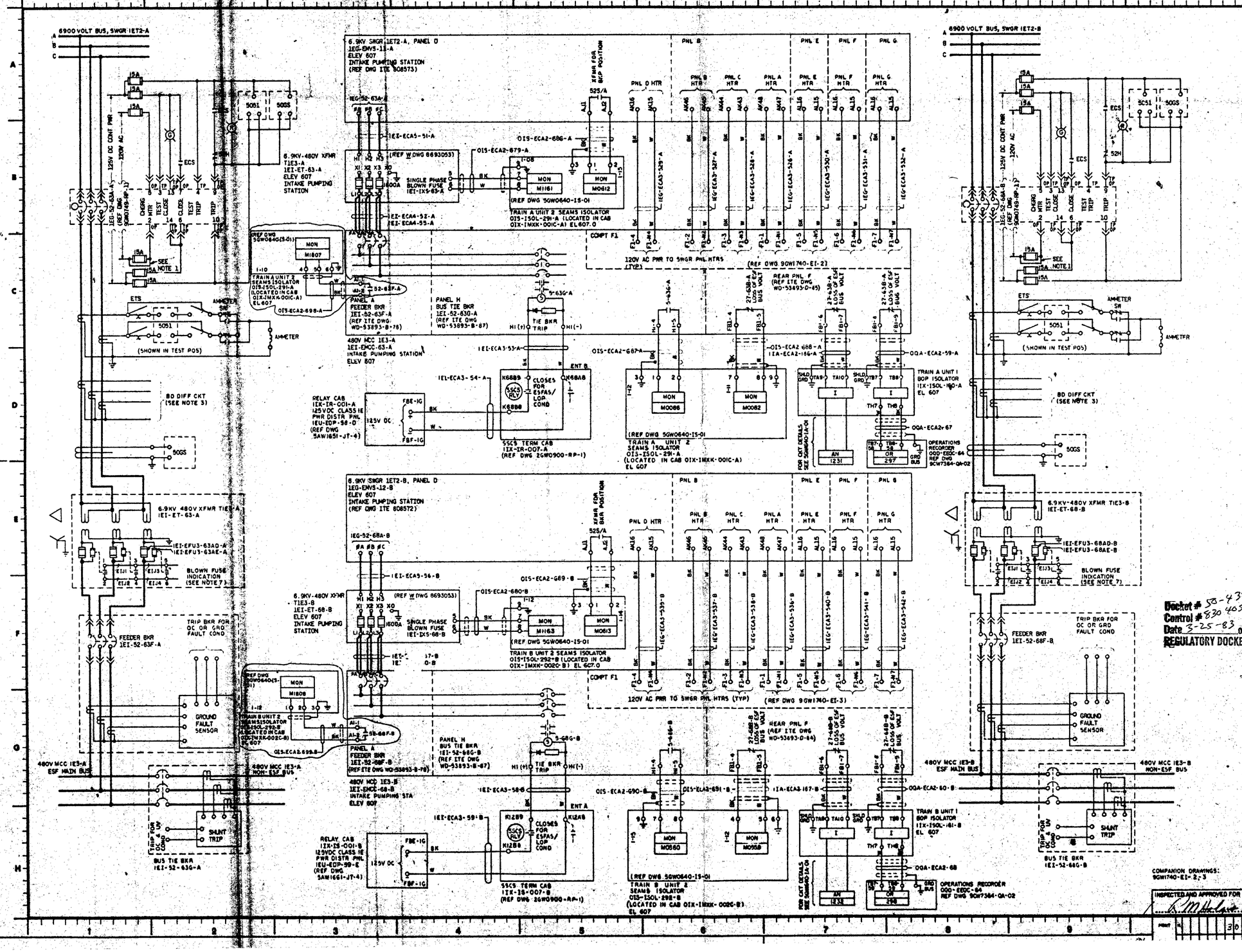

NOTES:

1. TVA FIELD TO JUMPER FUSE.
2. 6900V SWITCHGEAR MFRR, I-T-E IMPERIAL CORP CONTRACT NO 75K5-85583.
3. FOR INTERNAL SCHEMATIC OF 6900V SWGR SEE TVA DWG 9GW0749-RP-1.
4. 6.9KV-480V XFMR MFRR, WESTINGHOUSE ELECTRIC CORP CONTRACT NO 76K5-85526. FOR DETAILS SEE WESTINGHOUSE OUTLINE DWG 8693053.
5. 480V MCC MFRR I-T-E IMPERIAL CORP, CONTRACT NO 76K5-86242.
6. TERMINATION OF ALL MEDIUM VOLTAGE CABLES WILL BE IN ACCORDANCE WITH CONSTRUCTION SPEC NO. G-38.
7. 6900-480V XFMR SECONDARY BLOWN FUSE ALARM ALSO INDICATES POSSIBLE SINGLE-PHASE CONDITION. FOR WIRING DETAILS SEE WESTINGHOUSE DWG 8730025.
8. SYSTEM JUMPERS ARE SHOWN PREFIXED WITH THE SYSTEM DESIGNATION EI. COMPLETE JUMPER DESIGNATION WILL INCLUDE THE UNID OF THE APPLICABLE ENCLOSURE. EXAMPLE: 1EI-ET-63-A-EI-1.

SYMBOLS:

MON / XXXXX	SAFETY-RELATED SEAMS MONITORING SYSTEM POINT NUMBER
AN / XXXX	UNIT ANNUNCIATION SYSTEM POINT NUMBER
OR / XXXX	MCR OPERATIONS RECORDER POINT NUMBER
○	DEVICE TERMINAL POINT
⊗	INDICATING LIGHT, R-RED, G-GREEN

Docket # 50-438
Control # 8304050536
Date 3-25-83 of Document
REGULATORY DOCKET FILE

PRC APERTURE CARD

REV	ECN NO.	DATE	DRWN	CHKD	DSGN	SUPV	APPD	TRIP	CHKD	SUPV	APPD
2	1385	1-26-88	RWS								
1	51	12-12-77	DBG	SAB	JP						

ECN 1385-ADDED CONTACT FOR MAIN MCC FOR BKR POSITION INPUT TO SEAMS
ECN 51-ADDED TERM AND POINT NUMBERS AND MADE VARIOUS MINOR CHANGES.

DRWN: S. P. ZACHARY
CHKD: J. W. DATTASOR JR.
SUPV: J. E. GRAHAM JR.
TRIP:
CHKD:
SUPV:
APPD:

SCALE: EXCEPT AS NOTED

INTAKE PUMPING STATION
UNIT 1

SYSTEM SCHEMATIC

480V CLASS 1E AC AUX PWR DISTR SYS

BELLEFONTE NUCLEAR PLANT
TENNESSEE VALLEY AUTHORITY
DIVISION OF ENGINEERING DESIGN

Q

SUBMITTED	RECOMMENDED	APPROVED
R. T. Hewitt	R. H. Hendon	John E. Wilson
KNOXVILLE 1-26-77	88 E	9GW1740-EI-1 R2

COMPANION DRAWINGS: 9GW1740-EI-2, 3

INSPECTED AND APPROVED FOR ISSUE