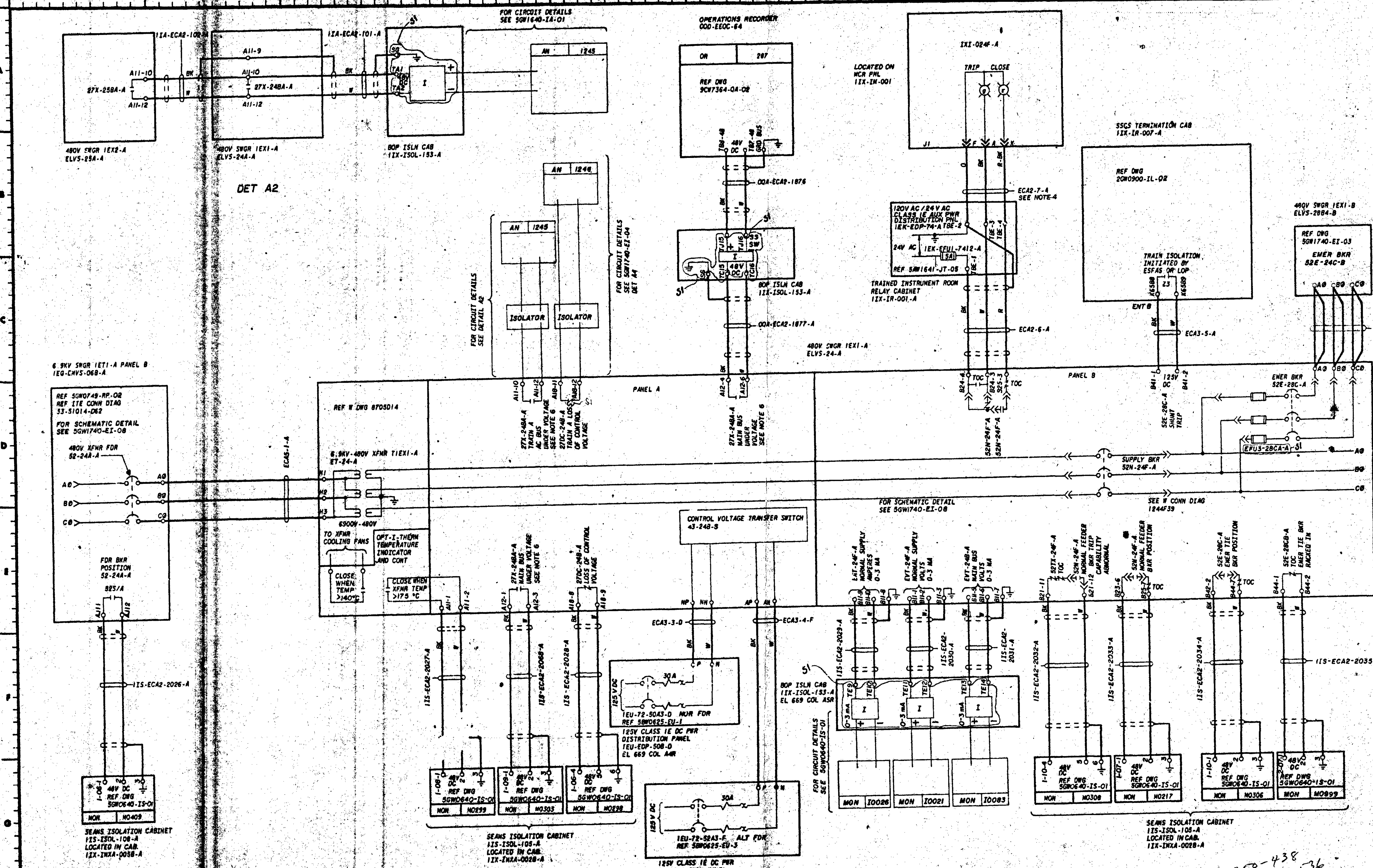

PRC APERTURE CARD

3	S1	6-26-79	ADDED TERMINAL NUMBERS TO BOP ISOLATION CABINETS. MINOR CHANGES.
2	S1	1-31-79	ADDED SEAMS ISOLATOR TERMINAL NUMBERS, REMOVED COL & EL AND OTHER MINOR REVISIONS PER S1.
1	S1	11-9-78	REDRAWN-ADDED MONITORING SYSTEM CABLES, TERMINATION, REF DWG & MINOR REVISIONS PER ECN S1

DSGN T.A. DENNIS
DRWN M.G. Wright
CHKD G.D. Gibbs
SUPV W.R. Thum
ENGINEER W.L. Aldridge

SCALE EXCEPT AS NOTED

GENERAL
UNIT 1

SYSTEM SCHEMATIC
480 V CLASS 1E AC
AUXILIARY POWER SYSTEM

BELLEFONTE NUCLEAR PLANT
TENNESSEE VALLEY AUTHORITY
DIVISION OF ENGINEERING DESIGN
Q

SUBMITTED W.L. Aldridge RECOMMENDED APPROVED

INSPECTED AND APPROVED FOR ISSUE

KNOXVILLE 11-1-77 88 E 5GW1740-EI-02

Docket # 50-438
Control # 8304050536
Date 3-25-83 of Document
REGULATORY DOCKET FILE