General Engineering Principles II

Fasteners (Bolts, Screws, Rivets)

- Sizes - nominal and root diameters.

- Spacing - from each other and from edge.
  example: aluminum structures
  between bolts: 2.5x bolt diameter
  between rivets: 3x rivet diameter
  from edge: 2x bolt or rivet diameter

- Placement - pattern of the placement.

- Use of washers - flat, lock, and nylon nuts.

- Torque settings for bolts and screws.

Welding

- Strength of weld - determined by the effective area of the weld. May be stronger or equal to the strength of the base material.
- Welds may be used as seals.
- Weldability is dependent on the material. Usually only good for similar metals.
- Heat Affected Zones - the structure of the material around the area of the weld changes due to heat from the weld. Heat from the weld may have an effect on the materials properties.

Single Groove Welds

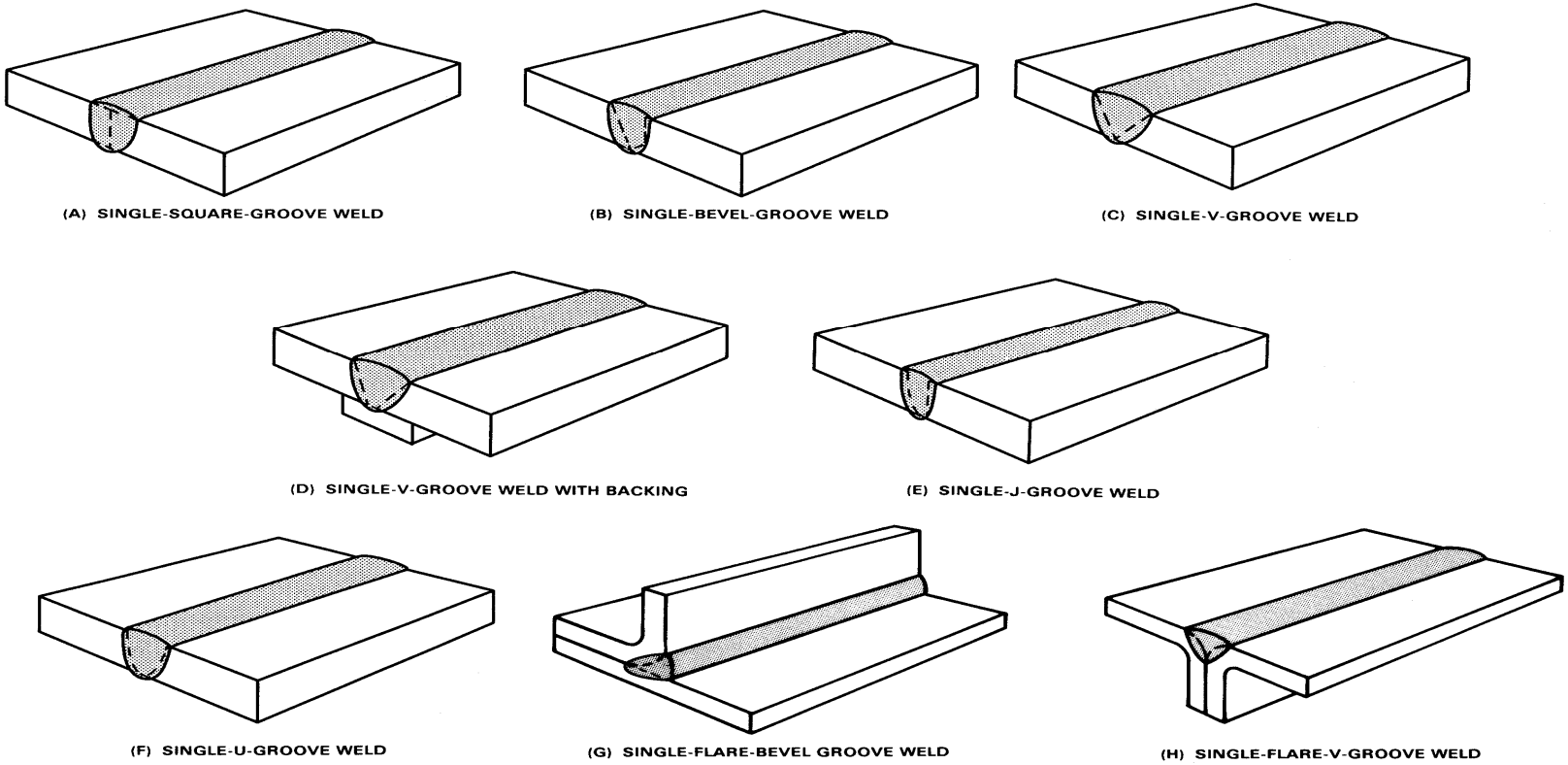

Source: ANSI/AWS A3.0-94

Double Groove Welds

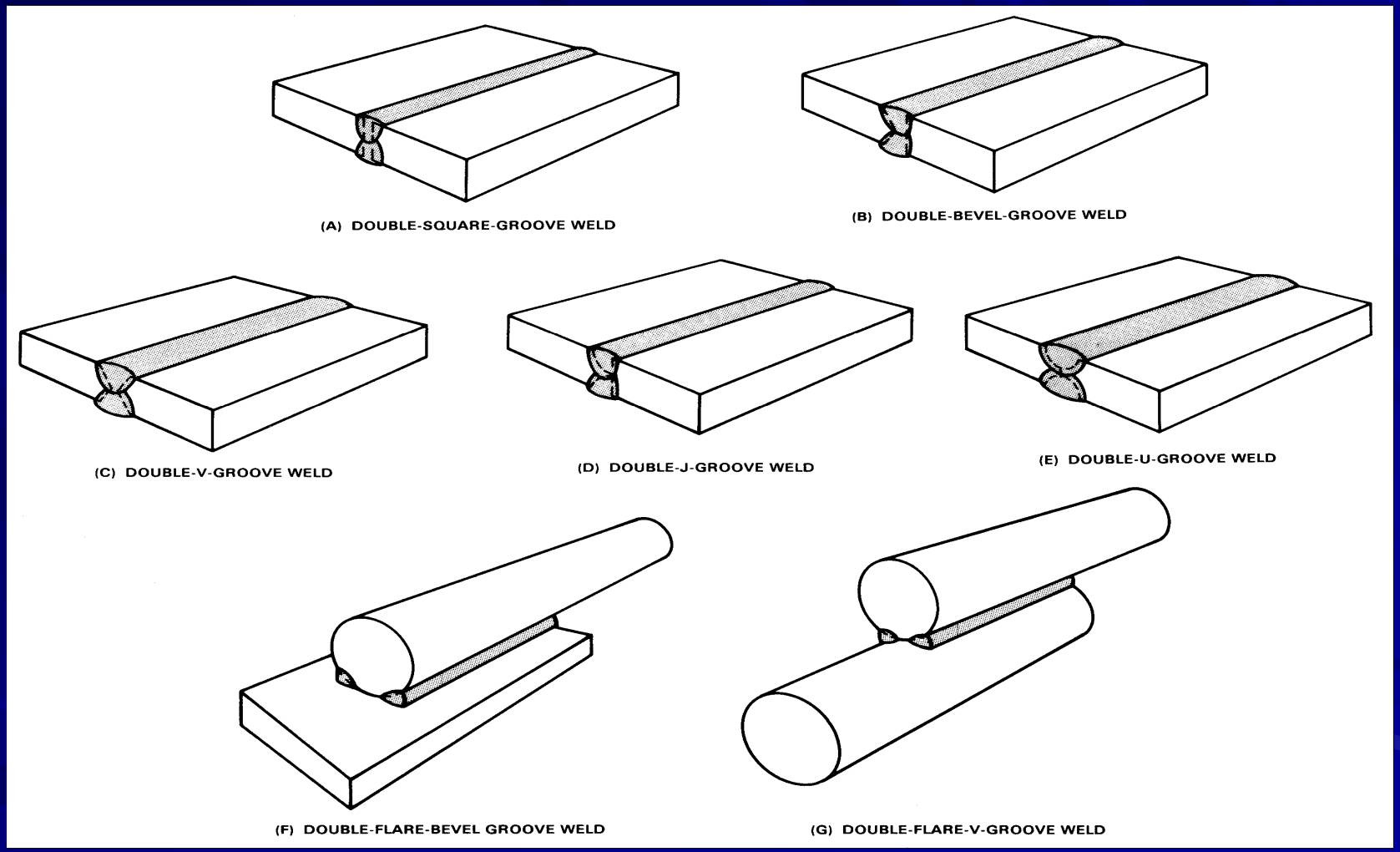

Source: ANSI/AWS A3.0-94

Edge, Flange, and Fillet Welds

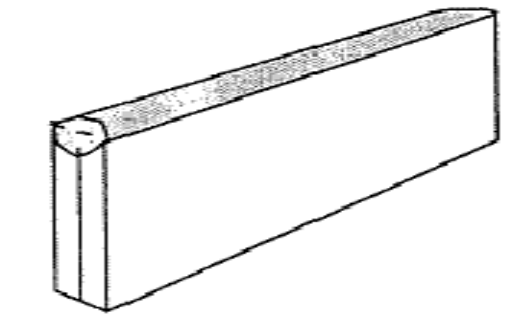

(A) Edge weld

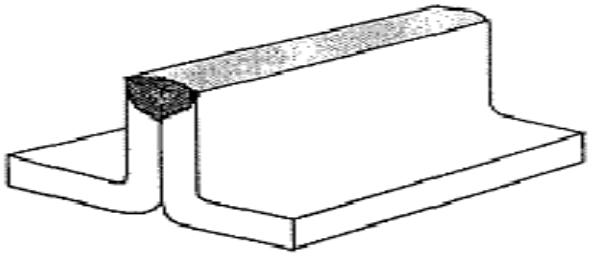

(B) Edge-flange weld

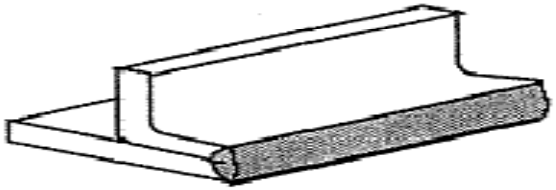

(C) Corner-flange weld

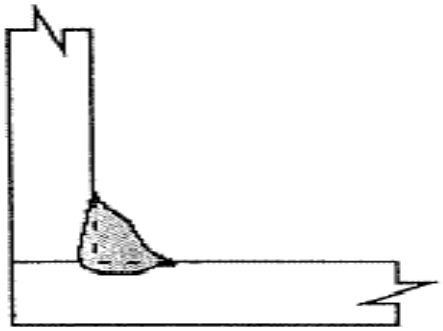

(D) Fillet weld

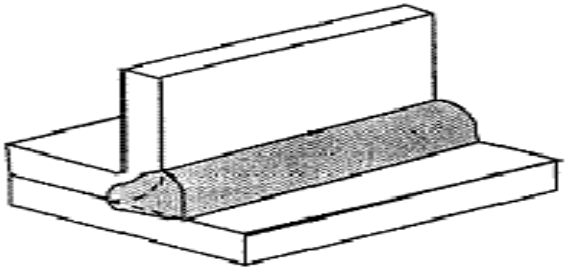

(E) Flare-Bevel-Groove Weld in a Flanged T-Joint

Joint Types and Applicable Weld Types

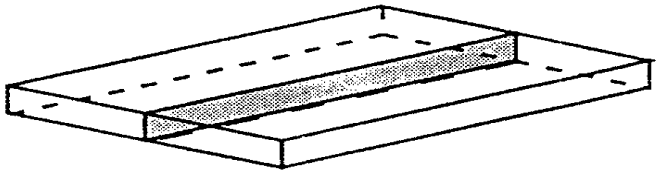

Applicable Welds

Bevel-groove
Flare-bevel-groove
Flare-V-groove
J-groove
U-groove
V-groove
Edge-flange
Braze
Square-groove

(A) Butt joint

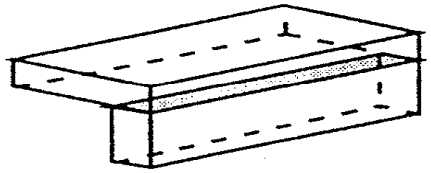

Applicable Welds

Fillet
Bevel-groove
Flare-bevel-groove
Flare-V-groove
J-groove
Square-groove
U-groove
V-groove
Plug
Slot
Spot
Seam
Projection
Braze
Corner-flange
Edge-flange

(B) Corner joint

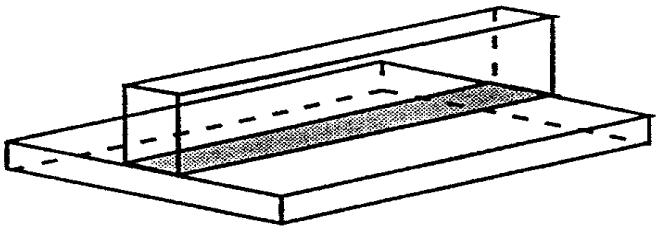

Applicable Welds

Fillet
Bevel-groove
Flare-bevel-groove
J-groove
Square-groove
Plug
Seam
Projection
Braze
Slot
Spot

(C) T-joint

Joint Types and Applicable Weld Types (cont.)

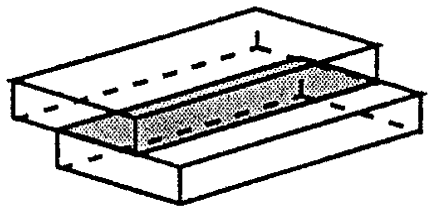

Applicable Welds

Fillet
Bevel-groove
Flare-bevel-groove
J-groove
Plug
Slot
Spot
Seam
Projection
Braze

(D) Lap joint

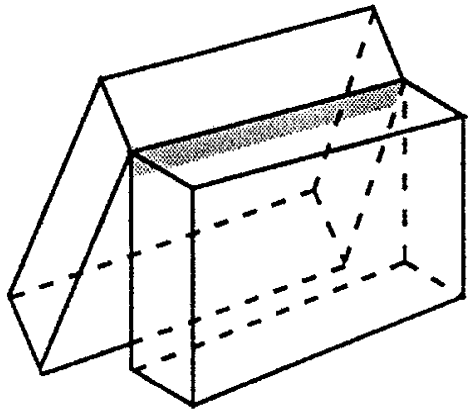

Applicable Welds

Bevel-groove
Flare-bevel-groove
Flare-V-groove
J-groove
Square-groove
U-groove
V-groove
Edge
Corner-flange
Edge-flange
Seam

(E) Edge joint

AMERICAN WELDING SOCIETY

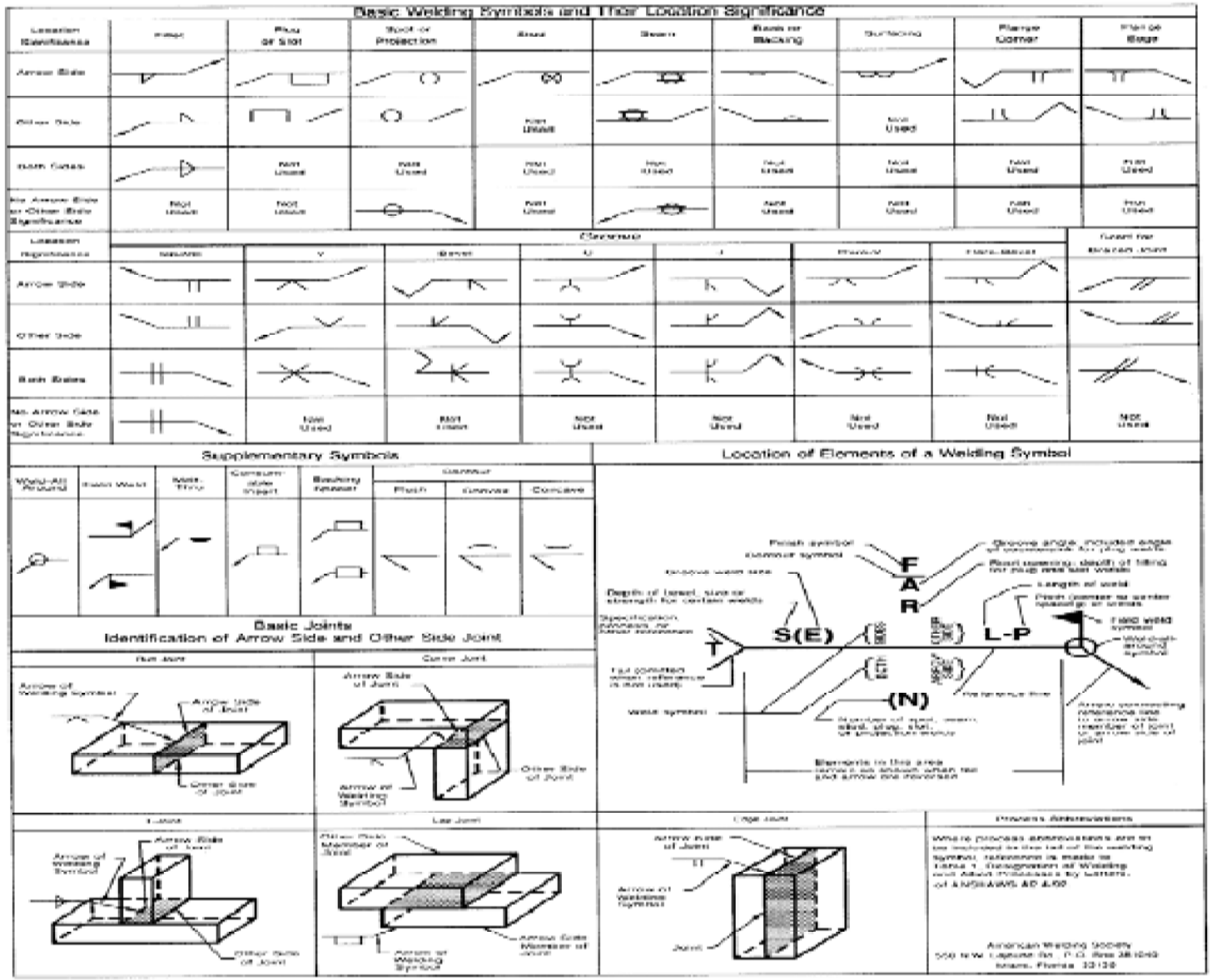

Source: ANSI/AWS A2.4-93

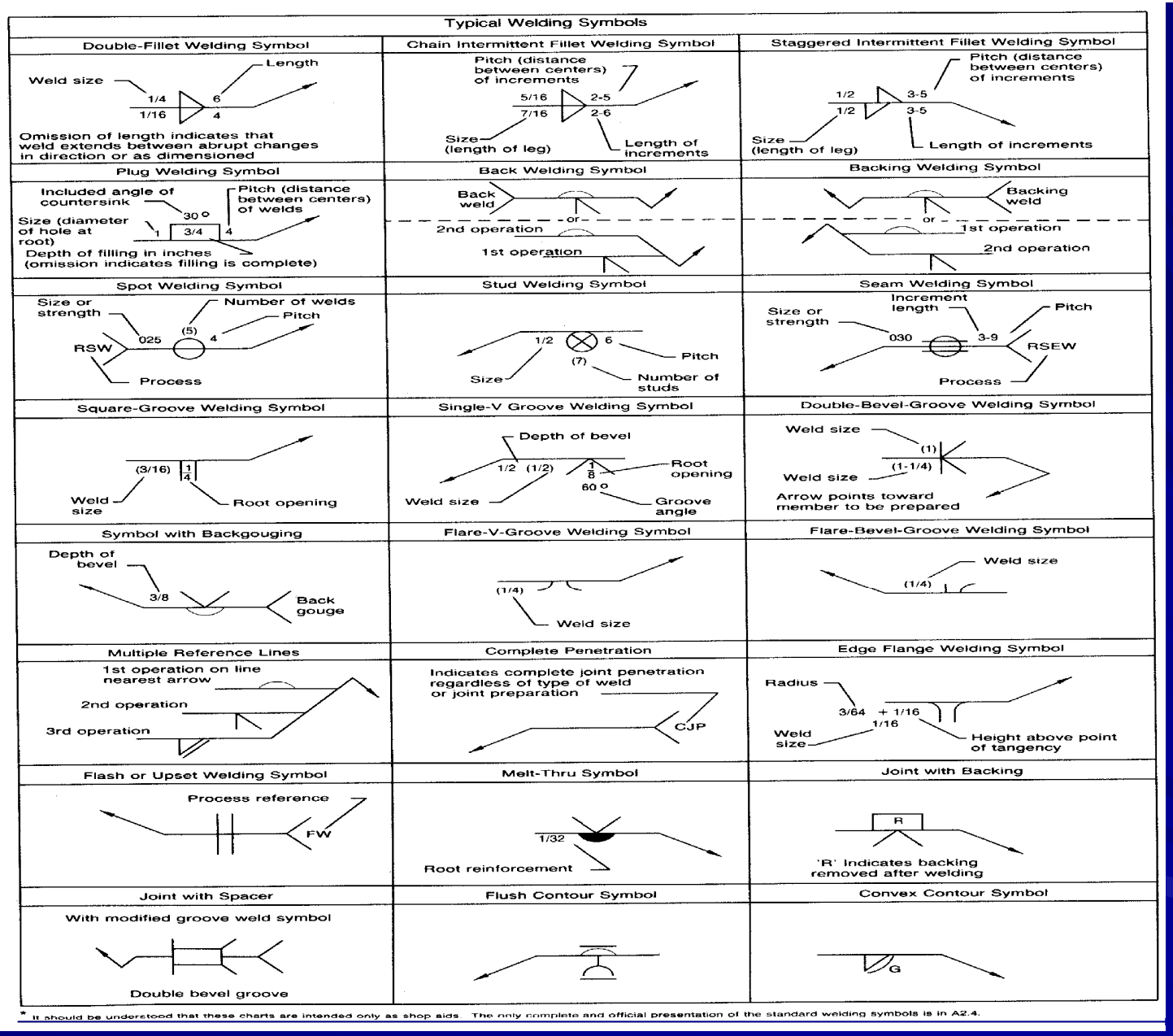

Source: ANSI/AWS A2.4-93

Weld Area

Weld Terminology

Weld Area = Effective Throat x Length

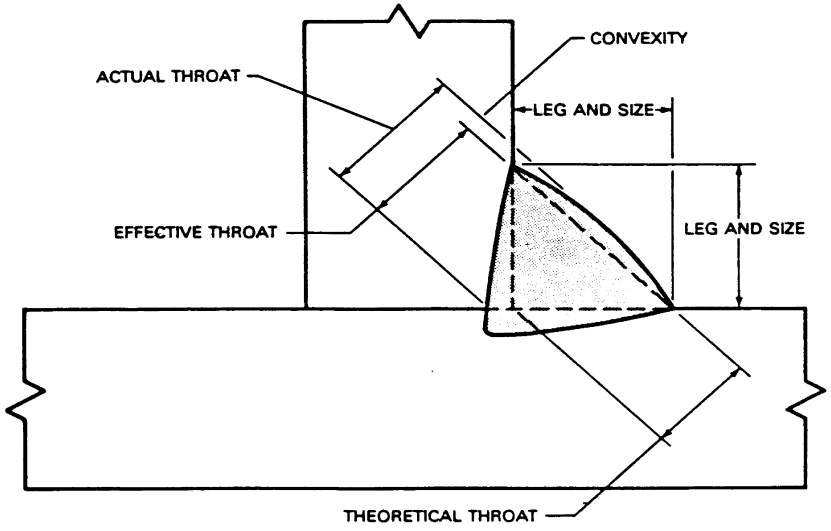

Convex Fillet Weld

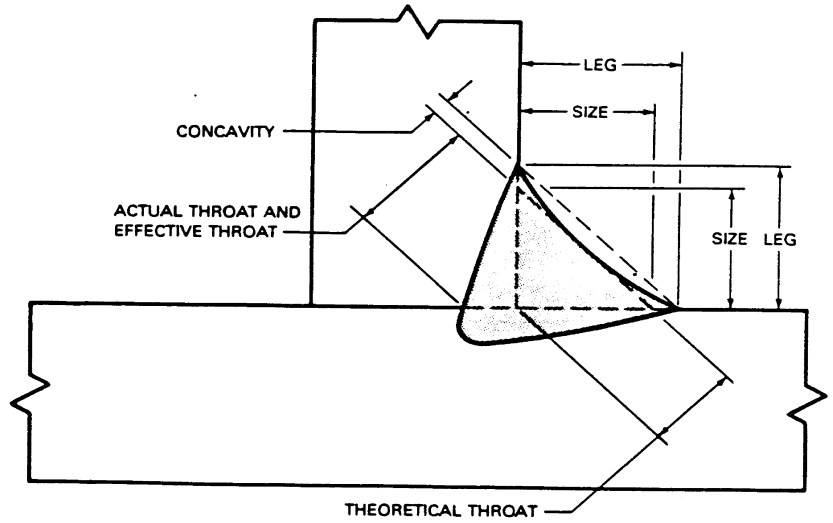

Concave Fillet Weld

Deformation of Material

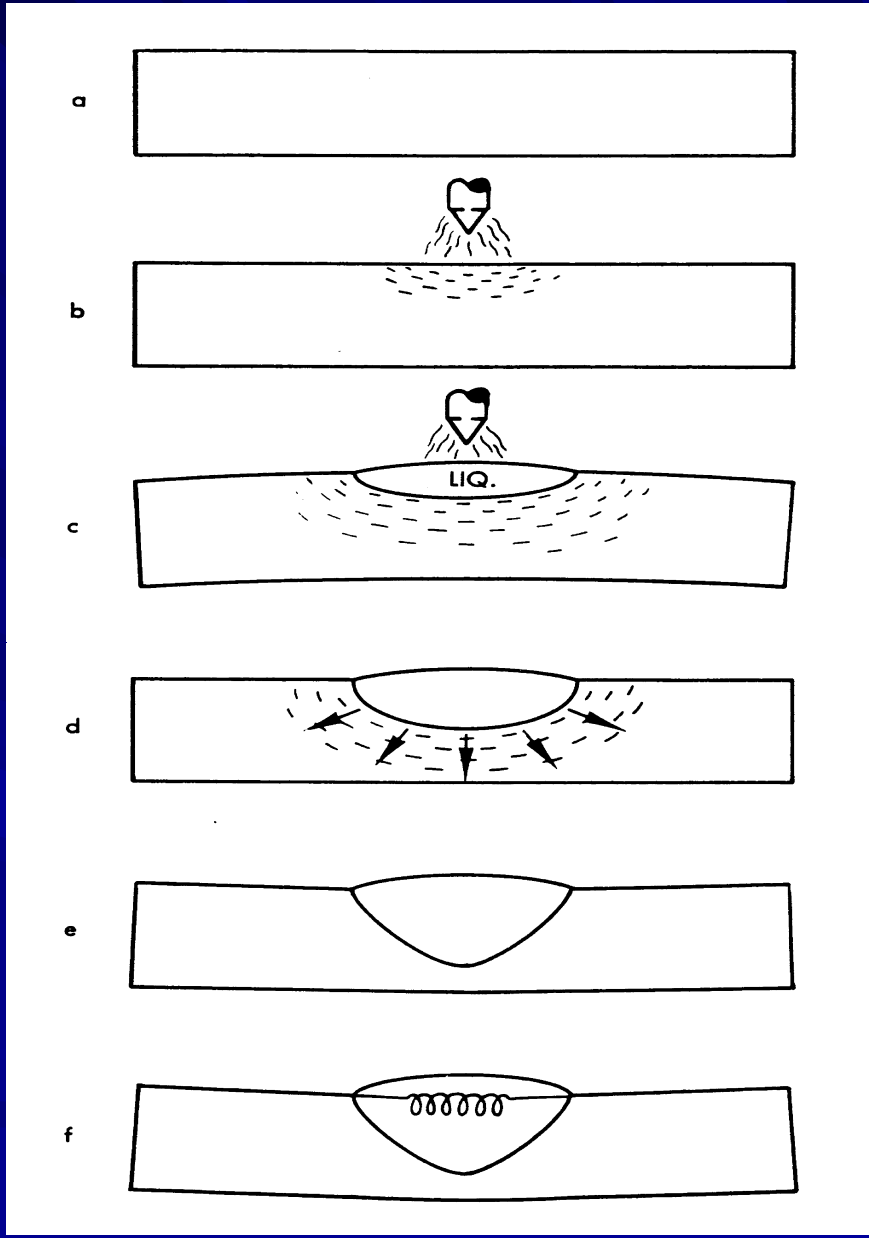

HAZ and the Affect of Preheating

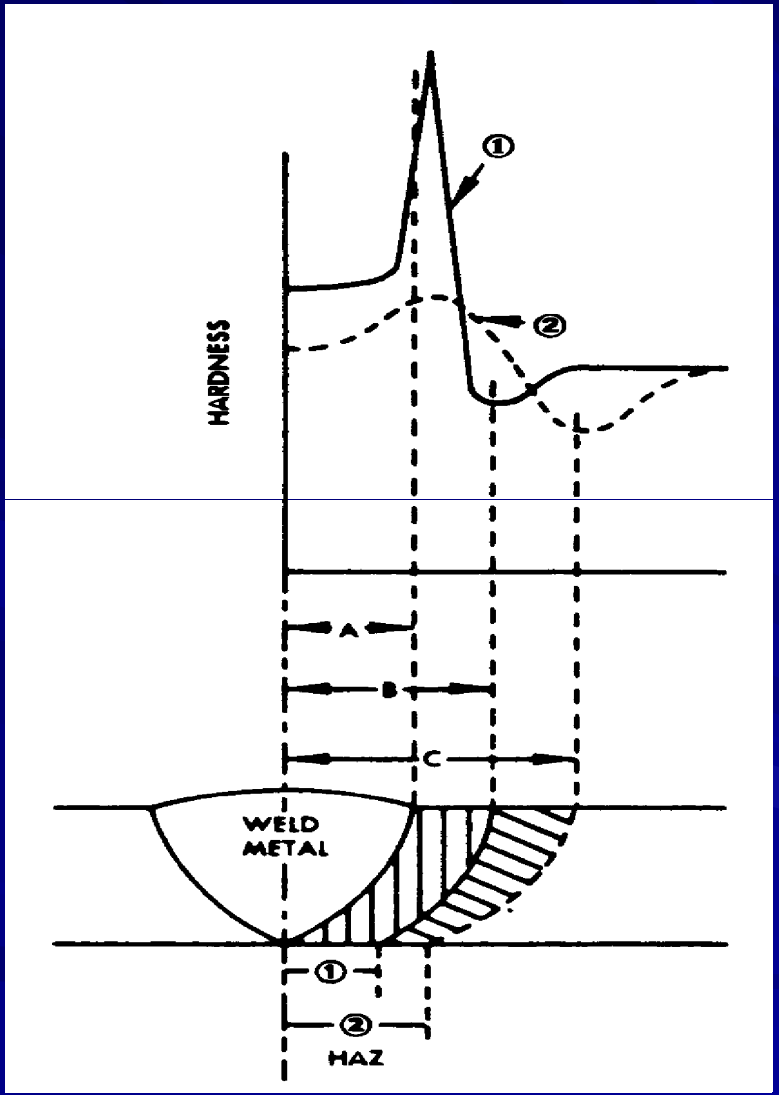

Shielded Metal Arc Welding (Stick)

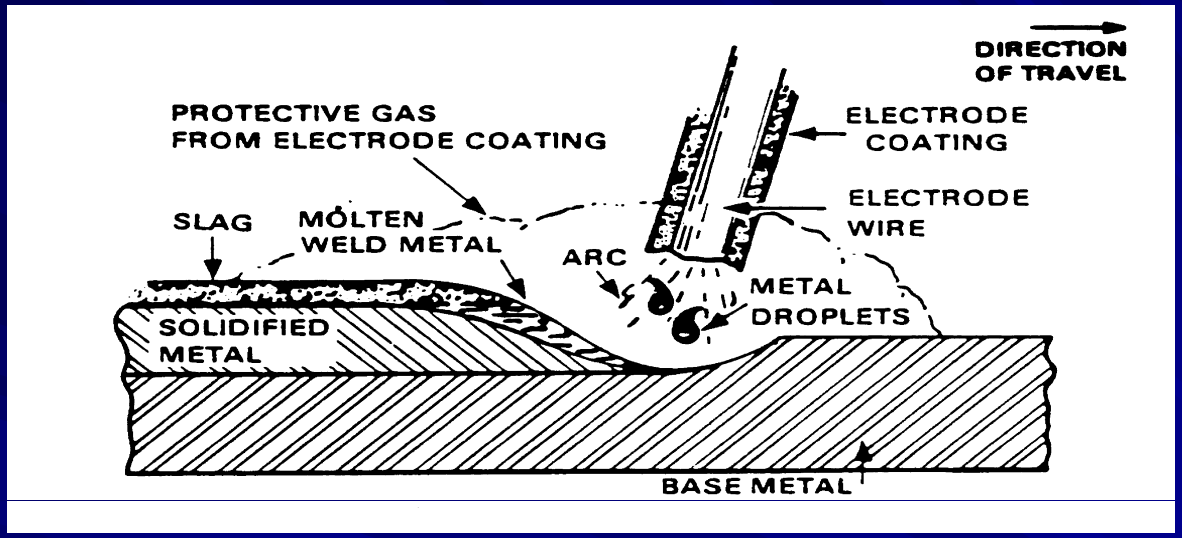

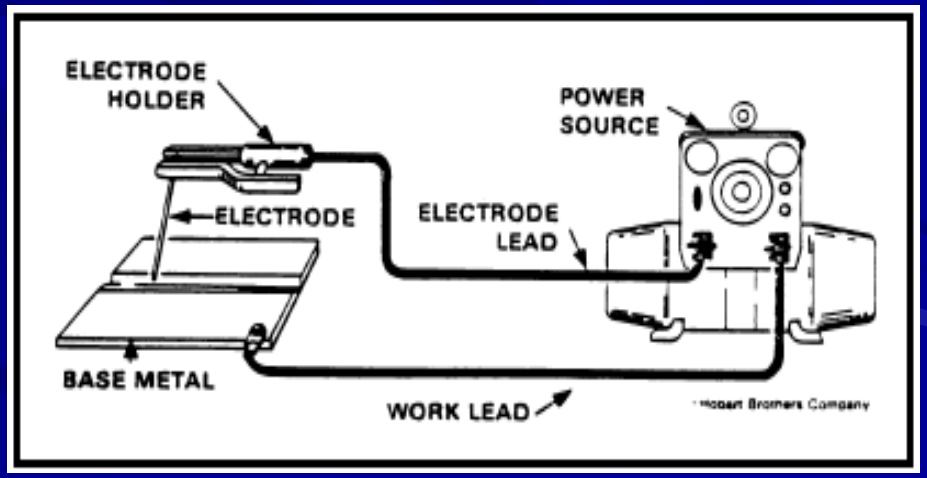

Gas Metal Arc Welding (MIG)

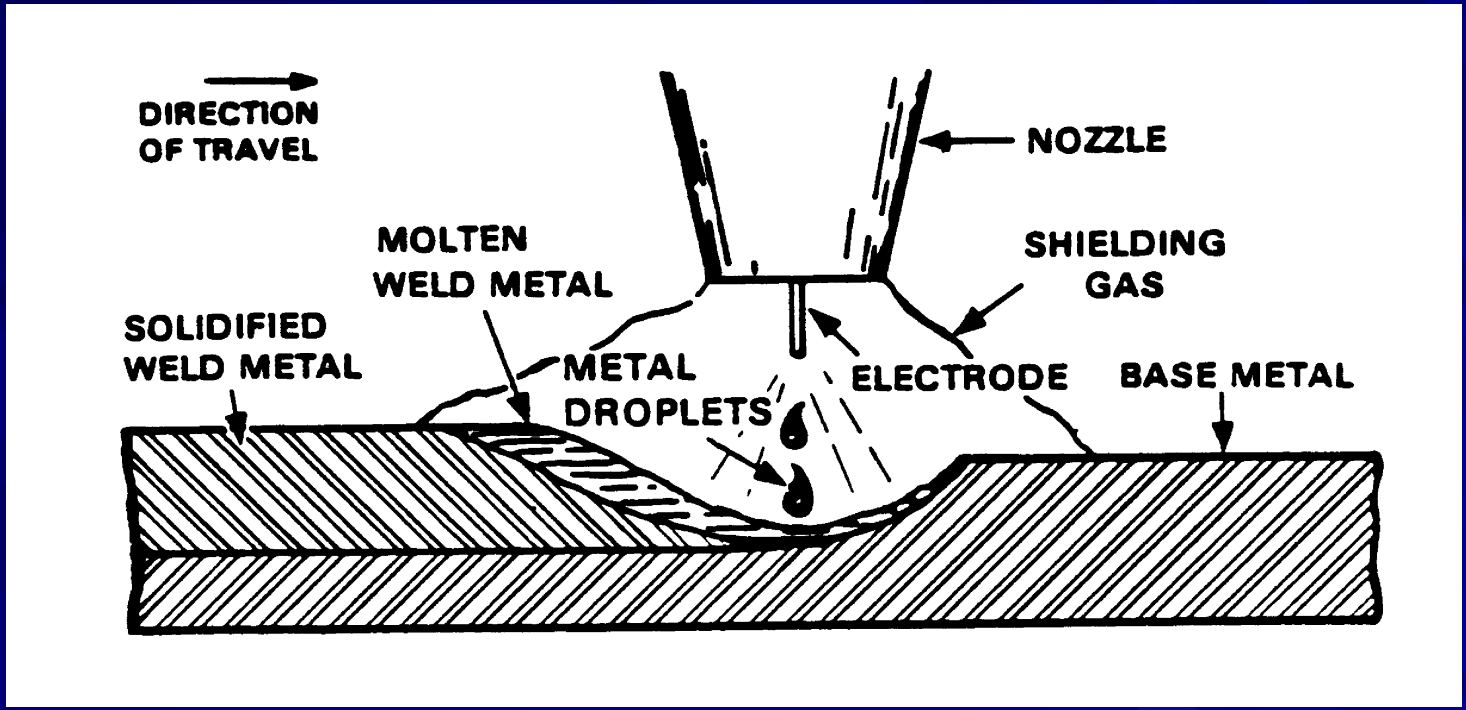

Gas Tungsten Arc Welding (TIG)

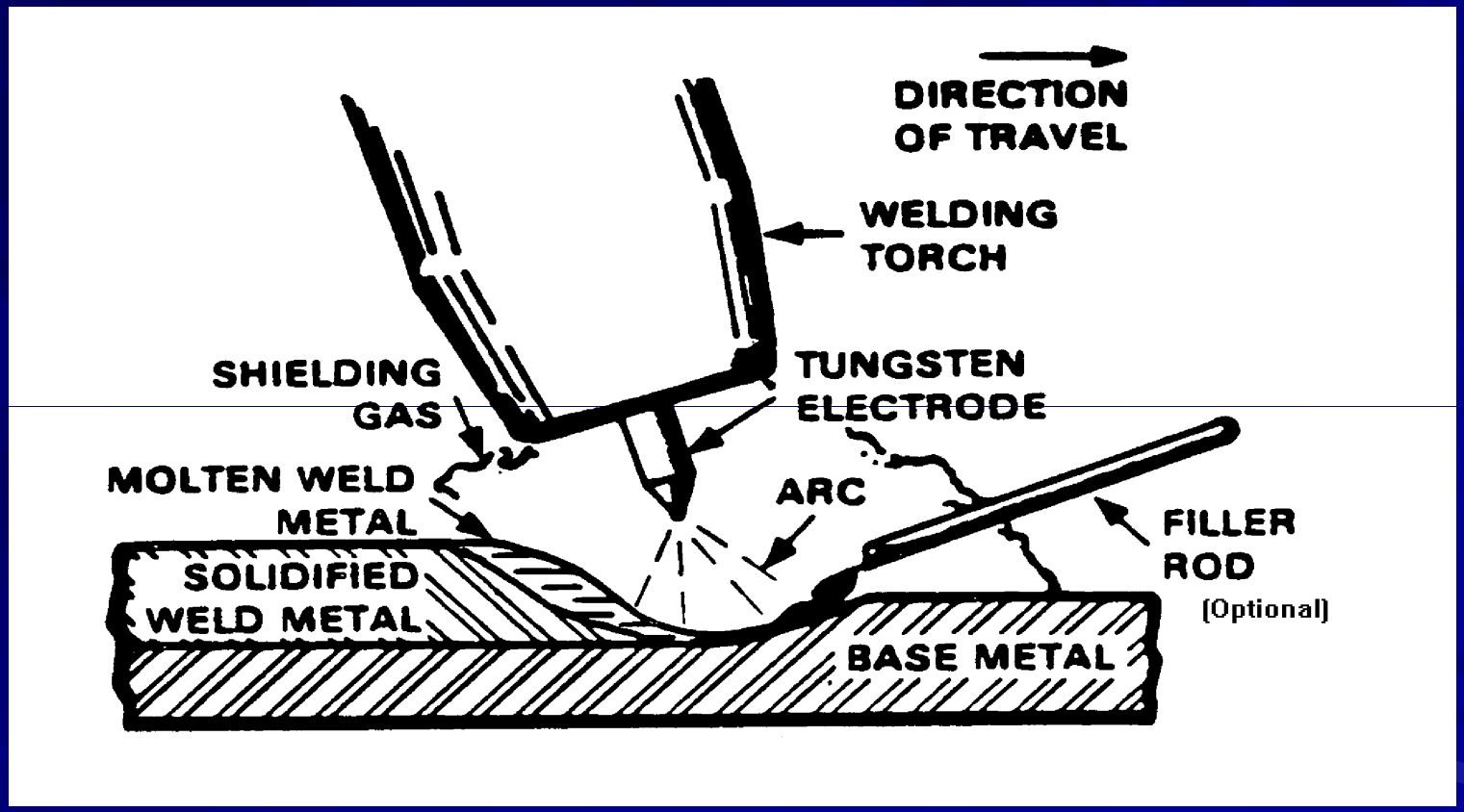

Welding Qualifications

- Qualification of welding procedure
- Qualification of welder/weld operator

Welding Procedures

Needed:

1. welding procedure specification (WPS)
   - essential information
   - nonessential
   - supplementary

2. procedure qualification record (PQR)
   - records of weld parameters
   - records of test results

Weld Procedures (cont.)

Must “rigorously” specify:

- joint type
- materials welded
- filler material used
- welding position
- preheat
- interpass temperature
- post weld heat treatments
- gases used
- electrical characteristics
- welding techniques

Weld Tests

- tensile test (elongation & reduction of area)

- bend tests

- fracture toughness test
  (Charpy V-Notch impact test)

- hardness test

Charpy V-Notch

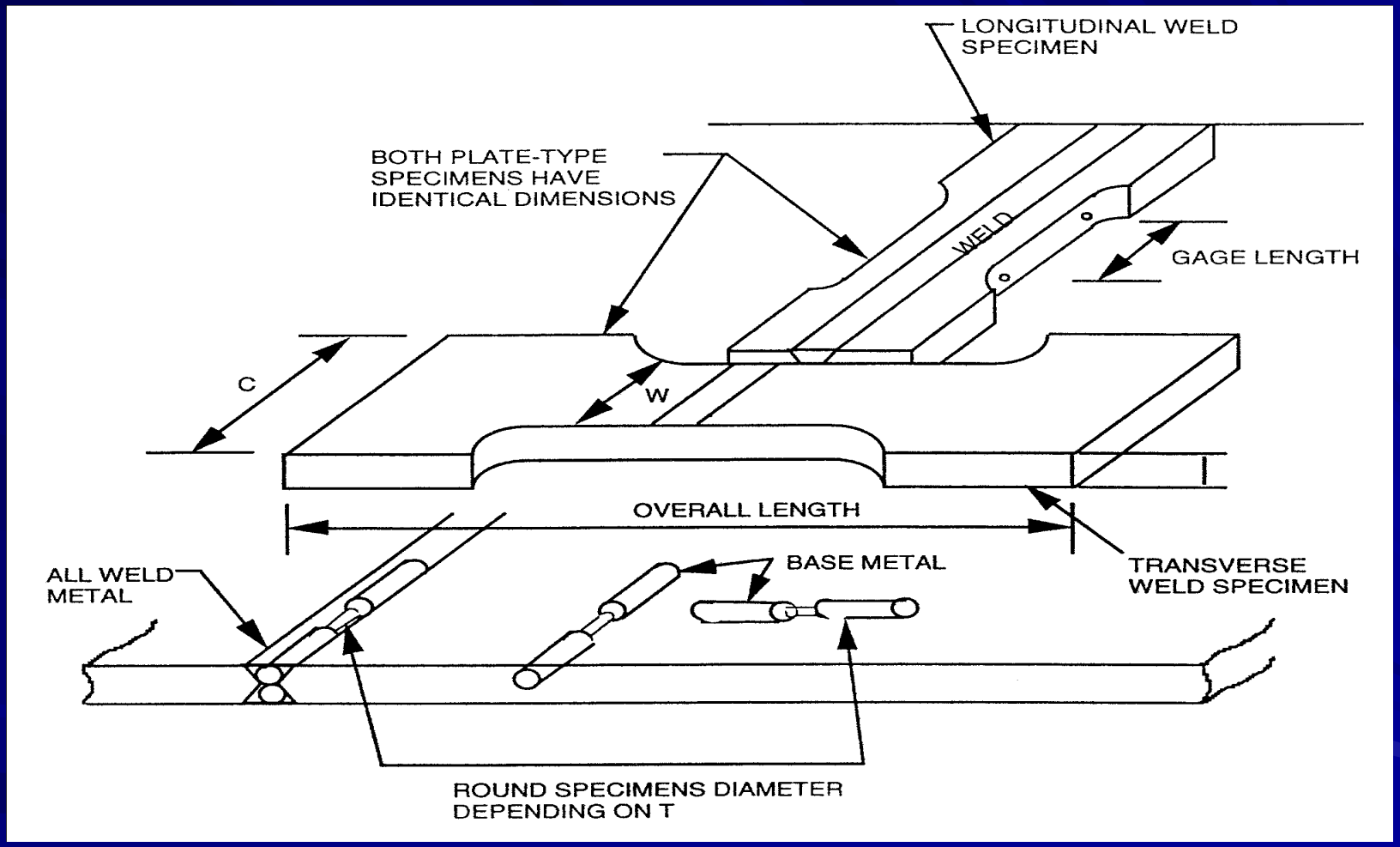

Typical Tensile Test Specimens for Evaluation of Welded Joints

Charpy V-Notch (cont.)

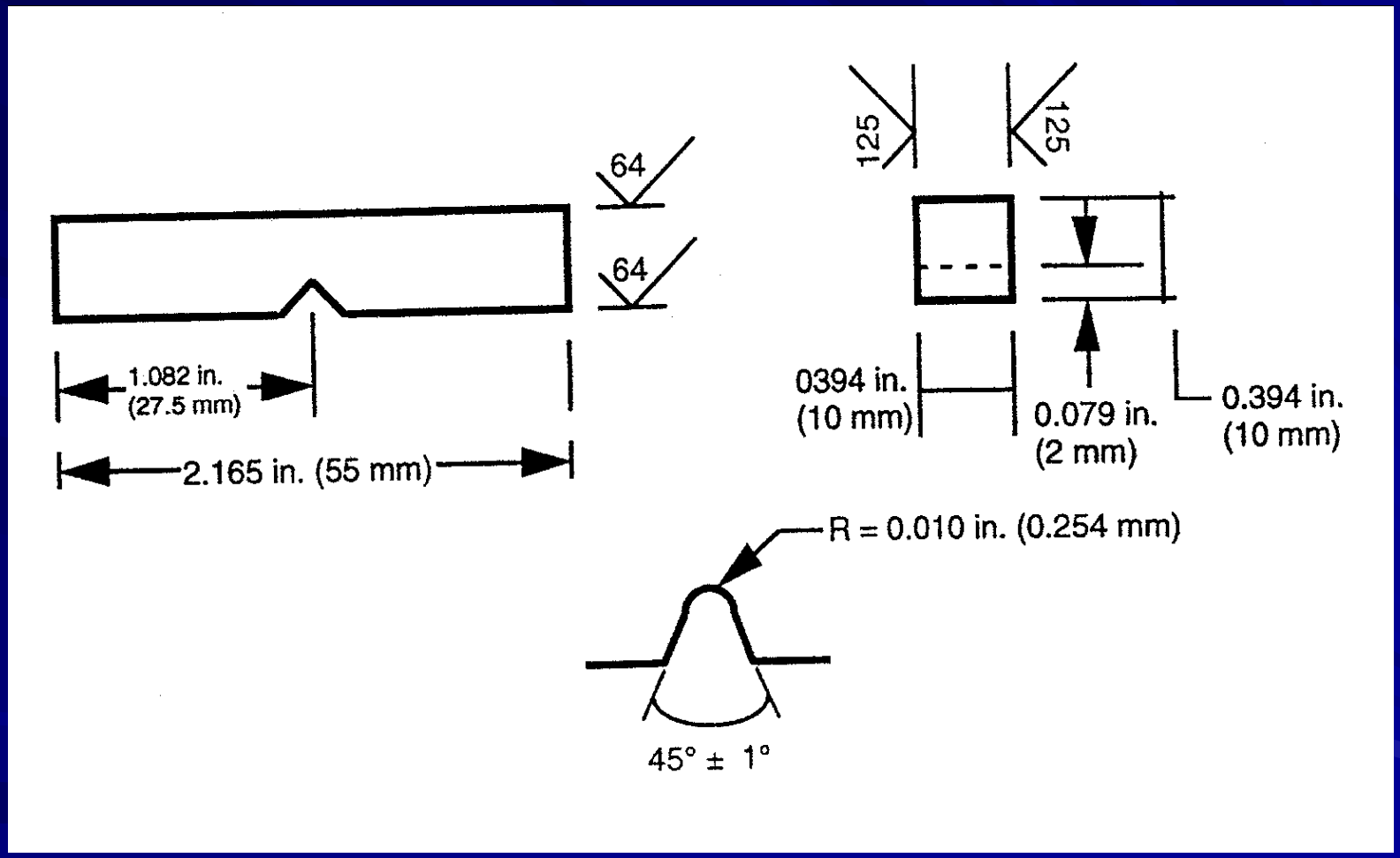

Charpy V-Notch Impact Specimen

References

- AWS B4.0, Standard methods for Mechanical Testing of Welds (preparation, conditions, procedures)

- ASME B&PVC Section IX (criteria)

Nondestructive Methods of Examination

- radiographic examination
- ultrasonic examination
- liquid penetrant
- magnetic particle
- eddy current
- visual examination
- leak testing

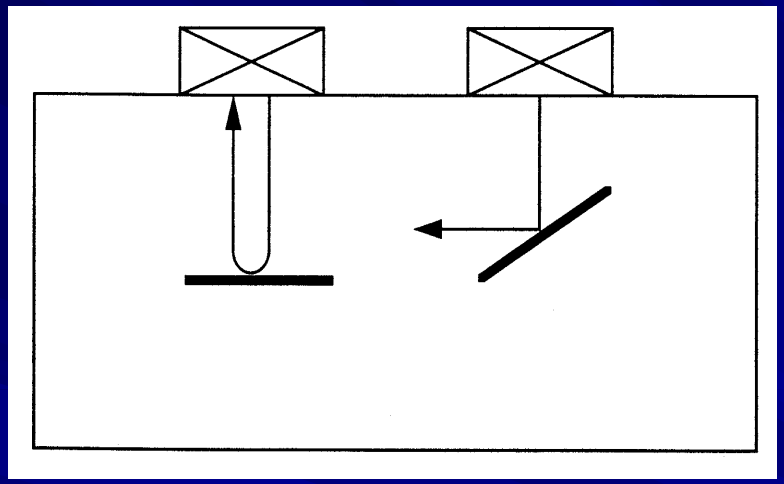

Ultrasonic Examination

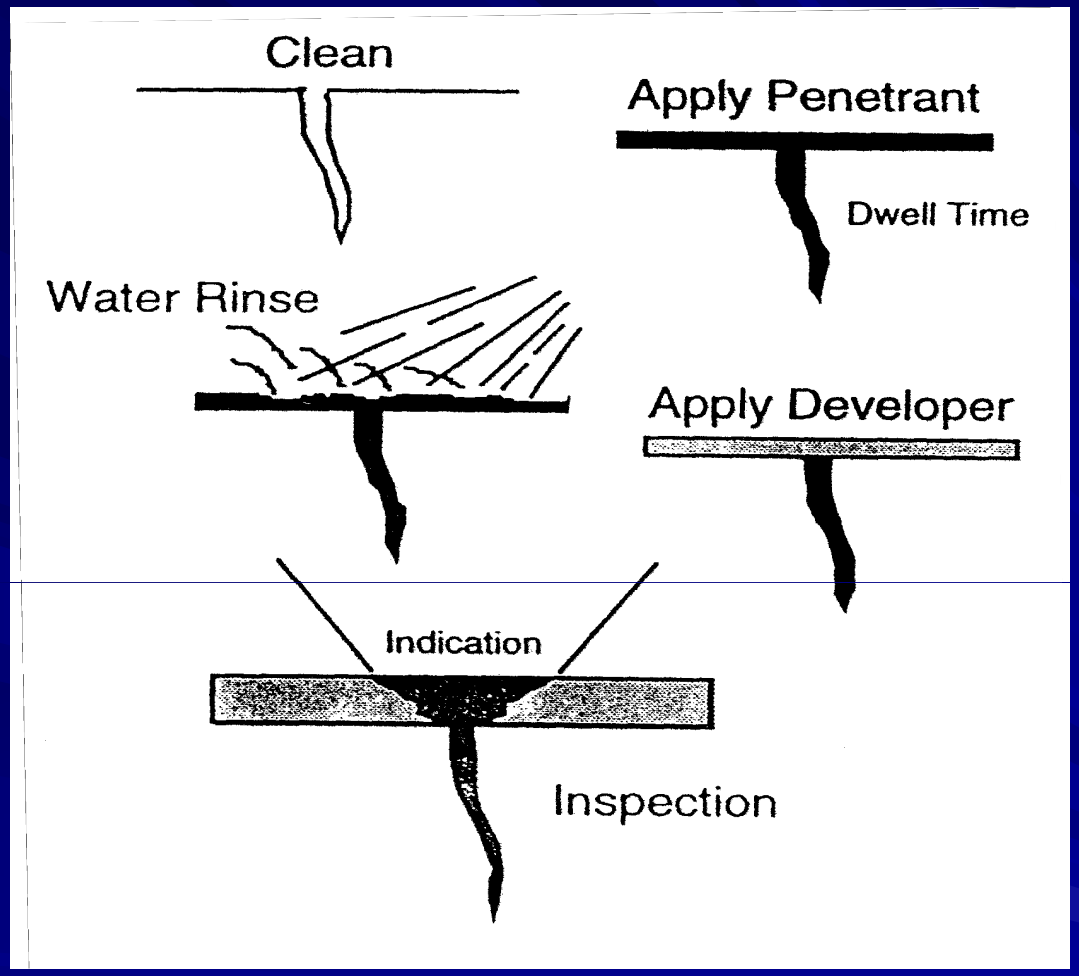

Liquid Penetrant Examination

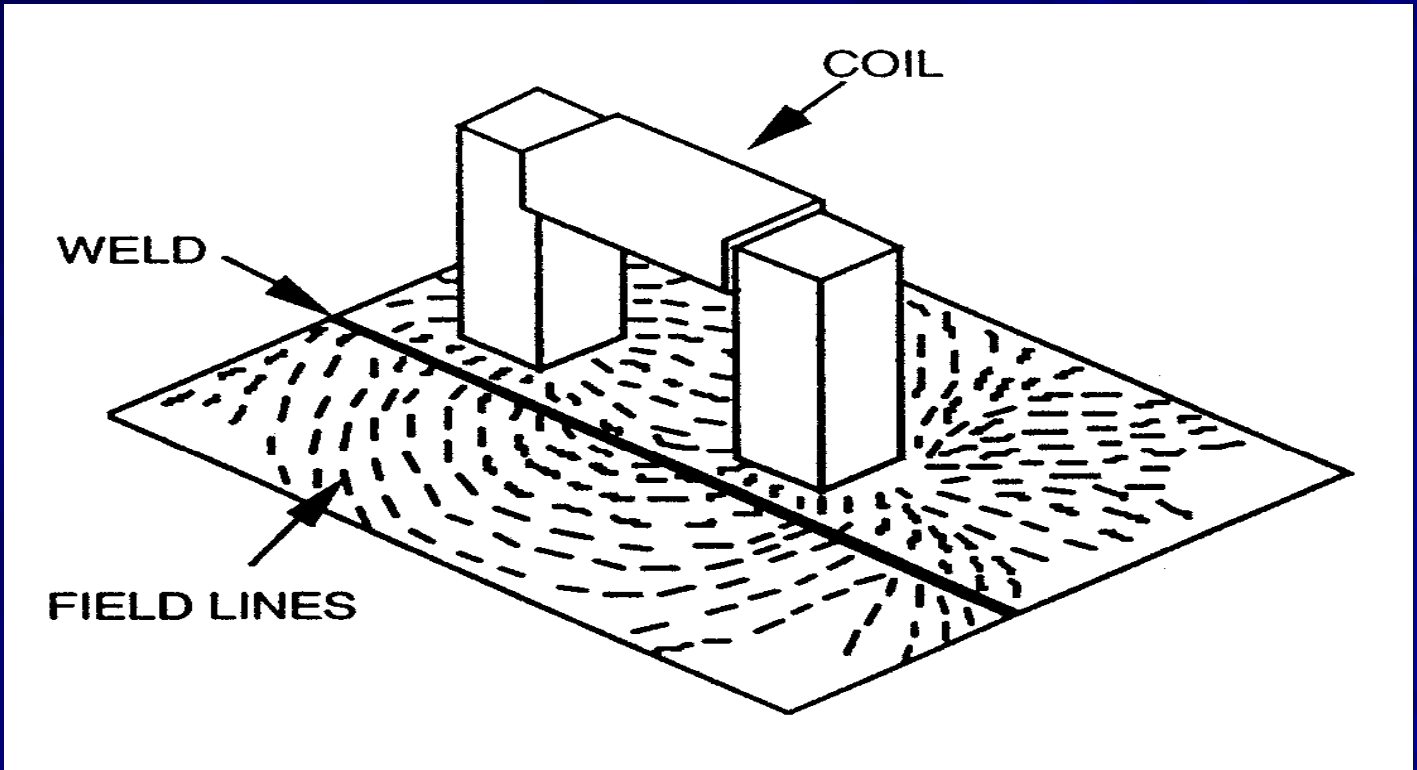

Magnetic Particle Examination

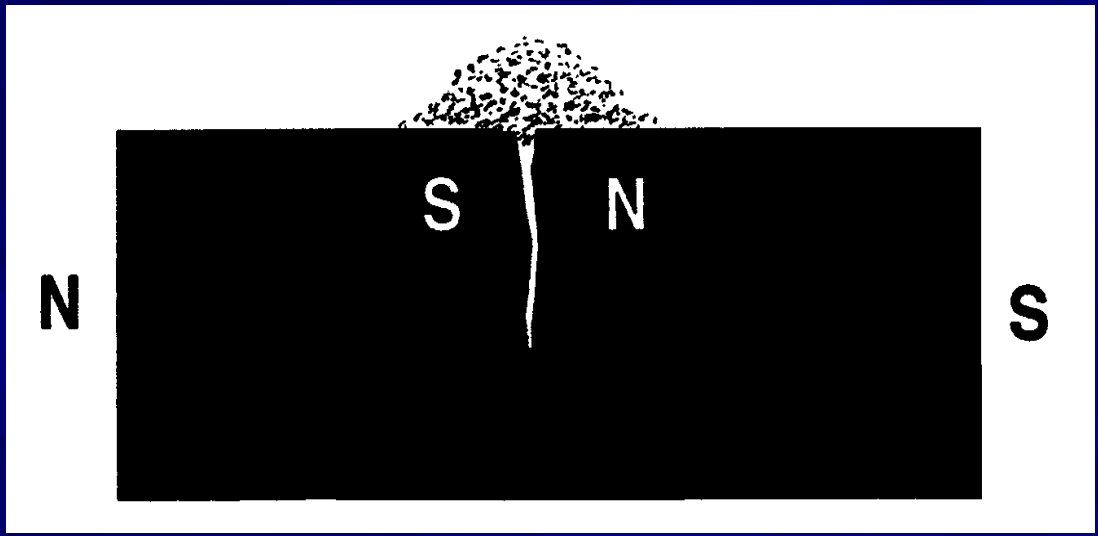

Magnetic Particle Examination

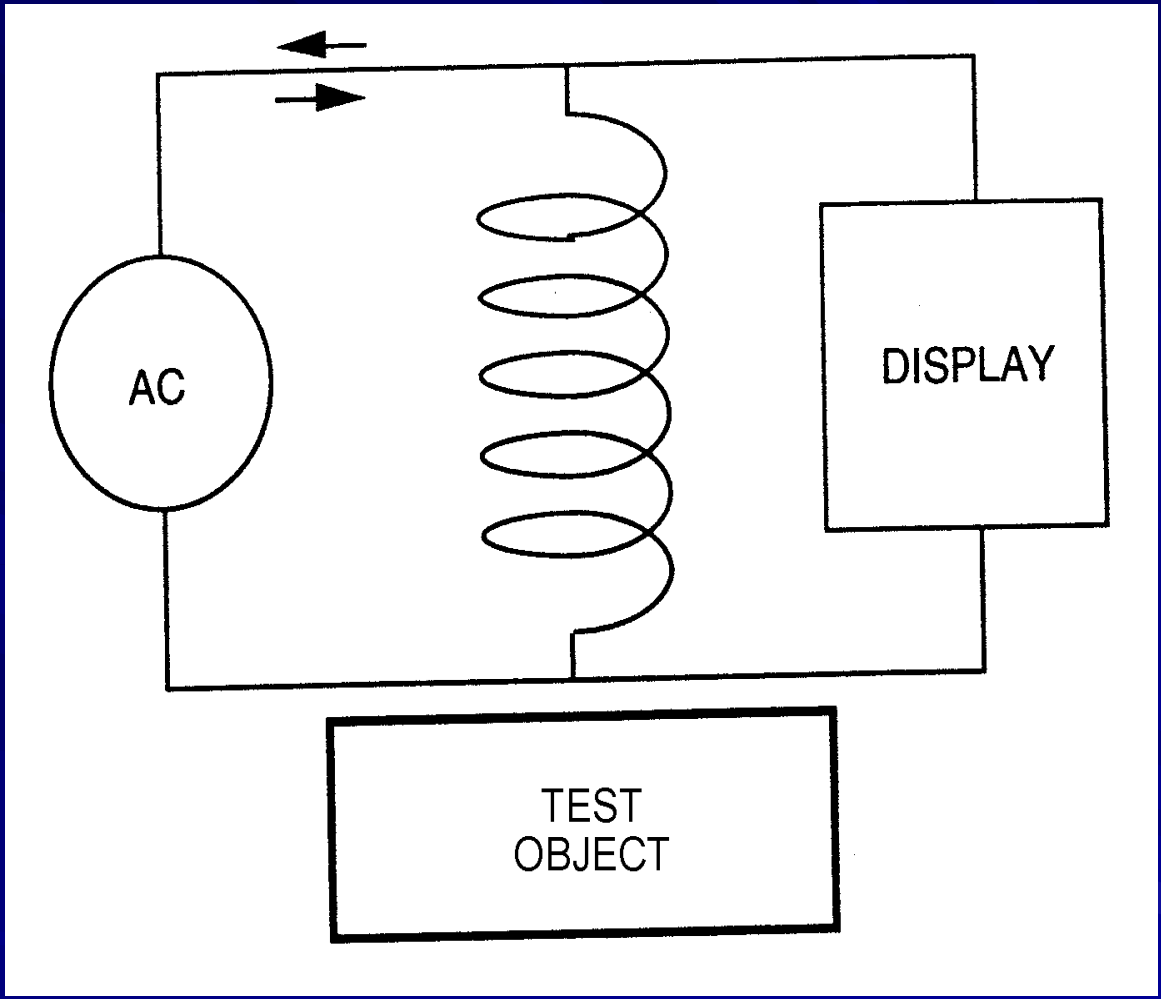

Eddy Current Examination

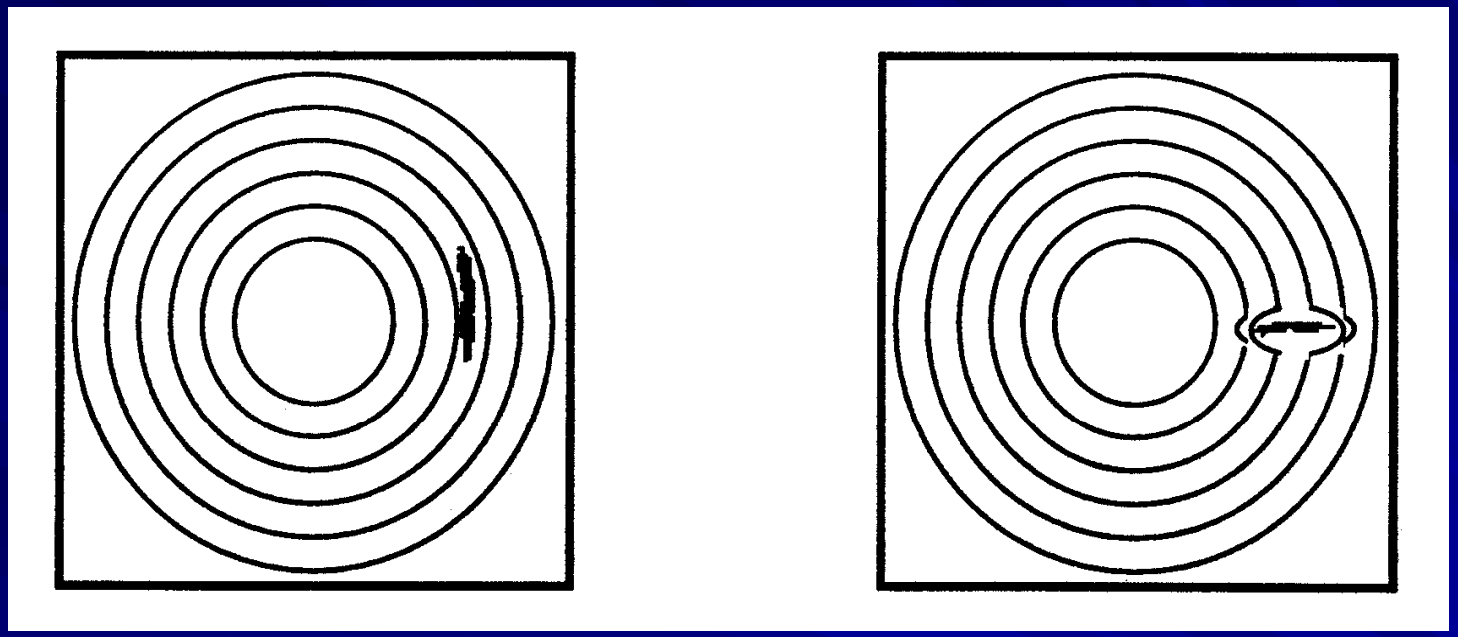

Eddy Current Examination

Qualification of Welders/Welding Operators

- demonstrate ability to make sound welds by WPS
- tests to assess minimum skill (not production skills)
- specimens tested, e.g. by independent laboratories
- Ref: ASME B&PVC, Section IX, Article III, for general requirements

Glues/Adhesives

- Alternative to welding or fastening
- Can distribute load eliminating localized stresses
- Can join dissimilar materials
- Low cost and skill level
- Proper surface preparation is critical
- Tight controls are needed for mixing of two part epoxies.

Glues/Adhesives (cont.):

- Susceptible to temperature and certain fluids. Therefore, need to verify integrity if used as a seal.
- Verify they will withstand environments when used to attach labels.
- Strength is usually verified through prototype testing.

Moving Parts - Clearances

- Thermal Expansion - openings must be such that when the temperature increases, there is still a clearance.

- Corrosion (vapors, dirt, rust, fluids) - can form on bearing surfaces and keep the part from moving or could build up and fill the clearances which would not allow the part to move.

- Clearance for lubricants.

Moving Parts - Friction

- Look everywhere.
- Contact between any parts.
  - shutter and fixed walls.
  - shaft and fixed walls.
  - shaft and bearings.

Moving Parts - Bearings

- May be susceptible to radiation and high temperatures.
- Moving style - ball bearings, bushings, lubricants.
- Fixed style - nylon, brass, graphite, plastic.
- All types wear with time.