ATTACHMENT 3

AREVA DOCUMENT NO. 32-9138066-001

NMP-1 CRD HOUSING IDTB WELD ANOMALY ANALYSIS

(NON-PROPRIETARY)

Certain information, considered proprietary by AREVA NP Inc., has been deleted from this Attachment. The deletions are identified by pairs of braces ("{ }").

Nine Mile Point Nuclear Station, LLC
March 25, 2011

AREVA

CALCULATION SUMMARY SHEET (CSS)

Document No. 32 - 9138066 - 001 Safety Related: ☒ Yes ☐ No

Title NMP-1 CRD Housing IDTB Weld Anomaly Analysis

PURPOSE AND SUMMARY OF RESULTS:

This document is a non-proprietary version of AREVA NP Document number 32-9138065-002. AREVA NP proprietary information removed from 32-9138065-002 are indicated by pairs of braces "{ }".

The purpose of this analysis is to perform a fracture mechanics evaluation of a postulated anomaly in the NMP-1 CRD housing penetration contingency modification. According to the design specification document [1], this anomaly is postulated to be a 0.1 inch flaw extending 360 degrees around the circumference at the "triple point" location where there is a confluence of three materials; the stainless steel CRD housing, the new stainless steel IDTB weld, and the low alloy steel RV lower head. Several potential flaw propagation paths are considered in the flaw evaluations. Flaw acceptance is based on the 2004 ASME B&PV Code Section XI criteria [3] for applied stress intensity factor (IWB-3612) and limit load (IWB-3642).

The purpose of Revision 001 is to correct the linear elastic fracture mechanics acceptance criterion for final flaw in head material. The conclusions from Rev 001 remain unchanged.

The results of the analyses demonstrate that the 0.10 inch weld anomaly is acceptable for a 40 year design life of the NMP-1 CRD housing weld repair. The minimum fracture toughness margins were found to be { } for normal/upset condition and { } for emergency/faulted conditions which are larger than the required margins of √10 for normal/upset conditions and √2 for emergency/faulted conditions per Section XI, IWB-3612 (Reference [3]). The maximum final flaw size is about { } inch (considering all flaw propagation paths). A limit load analysis with stable crack extension (Z-factors) was performed considering the ductile repair weld material along flaw propagation Paths 1 & 2. The analysis showed that for the postulated circumferential flaw the minimum margin on applied stress was { }. For the axial flaw the minimum margin on flaw depth was { }.

THE FOLLOWING COMPUTER CODES HAVE BEEN USED IN THIS DOCUMENT:

CODE/VERSION/REV	CODE/VERSION/REV
AREVACGC 5/0	

THE DOCUMENT CONTAINS ASSUMPTIONS THAT SHALL BE VERIFIED PRIOR TO USE

☐ YES
☒ NO

Review Method: ☒ Design Review (Detailed Check)
☐ Alternate Calculation

Signature Block

Name and Title (printed or typed)	Signature	P/R/A and LP/LR	Date	Pages/Sections Prepared/Reviewed/Approved
S.J. Noronha Engineer IV		LP	3/17/11	All
S.H. Mahmoud Engineer IV		LR	3/17/11	All (Detailed check)
T. M. Wiger Unit Manager		A	3/17/11	All

Note: P/R/A designates Preparer (P), Reviewer (R), Approver (A);
LP/LR designates Lead Preparer (LP), Lead Reviewer (LR)

Project Manager Approval of Customer References (N/A if not applicable)

Name (printed or typed)	Title (printed or typed)	Signature	Date
N/A			

Mentoring Information (not required per 0402-01)

Name (printed or typed)	Title (printed or typed)	Mentor to: (P/R)	Signature	Date
N/R				

Record of Revision

Revision No.	Date	Pages/Sections/ Paragraphs Changed	Brief Description / Change Authorization
000	2/2011	ALL	Original
001	3/2011	CSS	The purpose of revision added.
		Sec 1.0	The purpose of revision added.
		Sec. 2.4	The LEFM acceptance criteria for normal and upset
			conditions K_{IC} changed to K_{Ia}.
		Sec. 4.4.2	Table 4-3 updated
		Sec. 5.1.2	Section updated with loads from Stuck Rod Load instead of SESNB
		Sec. 5.3.2	Table 5-12 updated
		Sec. 6.3	Data under the heading RV Lower Head updated
			Also the subtitles corrected.
		Sec 7.2	Table 7-1 updated with New files for path 5 & 6.
		Sec 8.0	References updated

Table of Contents

Page

SIGNATURE BLOCK 2

RECORD OF REVISION 3

LIST OF TABLES 6

LIST OF FIGURES 7

1.0 INTRODUCTION 8
- 1.1 CRD Housing Penetration Modification 8
- 1.2 Potential Weld Anomaly 8
- 1.3 Postulated Flaws 12

2.0 ANALYTICAL METHODOLOGY 13
- 2.1 Stress Intensity Factor (SIF) Solutions 13
- 2.2 Fatigue Crack Growth Laws 15
- 2.3 Fatigue Crack Growth Calculations 16
- 2.4 Acceptance Criteria 16

3.0 ASSUMPTIONS 17
- 3.1 Unverified Assumption 17
- 3.2 Justified Assumption 17

4.0 DESIGN INPUTS 17
- 4.1 Geometry 17
- 4.2 Material Strength 18
- 4.3 Fracture Toughness 18
  - 4.3.1 Low Alloy Steel RV Head Material 18
  - 4.3.2 { } Materials 18
- 4.4 Applied Stresses Intensity Factor Calculation 19
  - 4.4.1 Transient Stresses 19
  - 4.4.2 External Loads 20
  - 4.4.3 Residual Stresses 20

5.0 CALCULATIONS 20

Table of Contents
(continued)

Page

5.1 Circumferential Flaw for Paths 1 & 2 20
5.1.1 Circumferential Flaw Growth Analysis (Paths 1 & 2) 20
5.1.2 Flaw Evaluation for OD Circumferential Flaw (Paths 1 & 2) 21
5.2 Axial Flaw for Paths 1 & 2 22
5.2.1 Axial Flaw Growth Analysis (Paths 1 & 2) 22
5.2.2 Flaw Evaluation for OD Axial Flaw (Paths 1 & 2) 25
5.3 Cylindrical Flaw for Paths 3 - 6 26
5.3.1 Cylindrical Flaw Growth Analysis (Paths 3 – 6) 26
5.3.2 Fracture Toughness Margin for Cylindrical Flaw (Paths 3 – 6) 28

6.0 SUMMARY OF RESULTS AND CONCLUSION 28
6.1 Fatigue Crack Growth of Continuous External Circumferential Flaw 28
6.2 Fatigue Crack Growth of Semi-Circular External Axial Flaw 28
6.3 Fatigue Crack Growth of Continuous Cylindrical Flaw along 29

7.0 COMPUTER USAGE 30
7.1 Validation 30
7.2 Computer Files 30

8.0 REFERENCES 31

APPENDIX A : VERIFICATION OF SIF FOR CYLINDRICAL FLAW 32

APPENDIX B : RT_{NDT} FOR REACTOR VESSEL LOW ALLOY STEEL AND THE HEAT AFFECTED ZONE ... 34

List of Tables

Page

Table 4-1: Material Strength 18
Table 4-2: Load Combinations and Cycles 19
Table 4-3: Stresses due to External Loads 20
Table 5-1: Crack Growth for 360° Circumferential Flaw 21
Table 5-2: Individual Transient Contribution to Crack Growth for 360° Circumferential Flaw 21
Table 5-3: End of Life Evaluation for Continuous External Circumferential Flaw (Limit Load) 22
Table 5-4: Crack Growth for Axial Flaw 23
Table 5-5: Individual Transient Contribution to Crack Growth for Axial Flaw 24
Table 5-6: End of Life Evaluation for External Axial Flaw (Limit Load) 25
Table 5-7: Initial Crack Growth for Cylindrical Flaw along Path 3 26
Table 5-8: Initial Crack Growth for Cylindrical Flaw along Path 4 26
Table 5-9: Initial Crack Growth for Cylindrical Flaw along Path 5 27
Table 5-10: Initial Crack Growth for Cylindrical Flaw along Path 6 27
Table 5-11: Final Crack Depth for Cylindrical Flaw 27
Table 5-12: LEFM Margin for Cylindrical Flaw 28
Table7-1: Computer Files for Crack Growth Evaluation 30

List of Figures

Page

Figure 1-1: CRD Penetration (Initial Configuration) 10
Figure 1-2: Modified CRD Penetration 11
Figure 1-3: Illustration of Crack Propagation Paths 13
Figure 2-1: OD, Partial Through-Wall, 360° Circumferential Flaw 14
Figure 2-2: OD, Partial Through-Wall, Semi-elliptical Axial Flaw 14

1.0 INTRODUCTION

AREVA plans to perform modification to the CRD housing penetration at the Nine Mile Point, Unit 1 (NMP-1). According to the design specification document (Reference [1]), each penetration consists of a stainless steel stub tube that is attached to the inside surface of the Reactor Vessel (RV) bottom head with a NiCrFe weld and an inner stainless steel CRD housing attached to the top end of the stub tube with a stainless steel weld, as shown in Figure 1-1. During RV fabrication, the stainless steel stub tube became furnace sensitized due to a post weld stress relief heat treatment. Through-wall cracking has occurred in some stub tubes during service. The cracking has resulted in reactor coolant leakage from the RV through the gap between the CRD housing outside surface and the RV bottom head penetration bore. Repairs have been previously performed by roll expanding the CRD housing in the bore to eliminate the gap and stop or limit the reactor coolant leakage. In the event that roll expansion does not seal the CRD housing penetration and stop the leak, AREVA shall perform a contingency modification on the CRD housing penetration as shown in Figure 1-2.

The purpose of this analysis is to perform a fracture mechanics evaluation of a postulated anomaly in the NMP-1 CRD housing penetration contingency modification. According to the design specification document [1], this anomaly is assumed to be a 0.1 inch semi-circular flaw extending 360 degrees around the circumference at the "triple point" location where there is a confluence of three materials; the stainless steel CRD housing, the stainless steel new weld, and the low alloy steel RV lower head. Several potential flaw propagation paths are considered in the flaw evaluations. The purpose of Revision 002 is to correct the linear elastic fracture mechanics acceptance criterion for final flaw in head material.

1.1 CRD Housing Penetration Modification

The CRD housing modification is described by the design drawing [2]. This modification involves adding a new weld that will become a part of the pressure boundary. The steps involved in the modification design are listed below.

- Weld prep machining and NDE
- Welding of repair weld
- Machining/grinding and NDE

During the welding process, a maximum 0.1 inch weld anomaly may form due to lack of fusion at the "triple point", as shown in Figure 1-2. The anomaly is conservatively postulated to be a "crack-like" defect 360° around the circumference at the "triple point" location. The design specification document [1] provides additional details of the weld repair procedure. The purpose of the present fracture mechanics analysis is to provide justification, in accordance with Section XI of the ASME B&PV Code [3], for operating with the postulated weld anomaly at the triple point. Predictions of fatigue crack growth are based on a design life of 40 years.

1.2 Potential Weld Anomaly

The anomaly could be located in the triple point region as shown in Figure 1-2. The region is called a "triple point" since three materials intersect at this location. The materials are:

- The CRD housing material, SA-312 OR SA376 TP 304 [1].
- The new weld filler material, { } [1].
- The RV lower head material, SA-302 Grade B [1].

Figure 1-1: CRD Penetration (Initial Configuration)

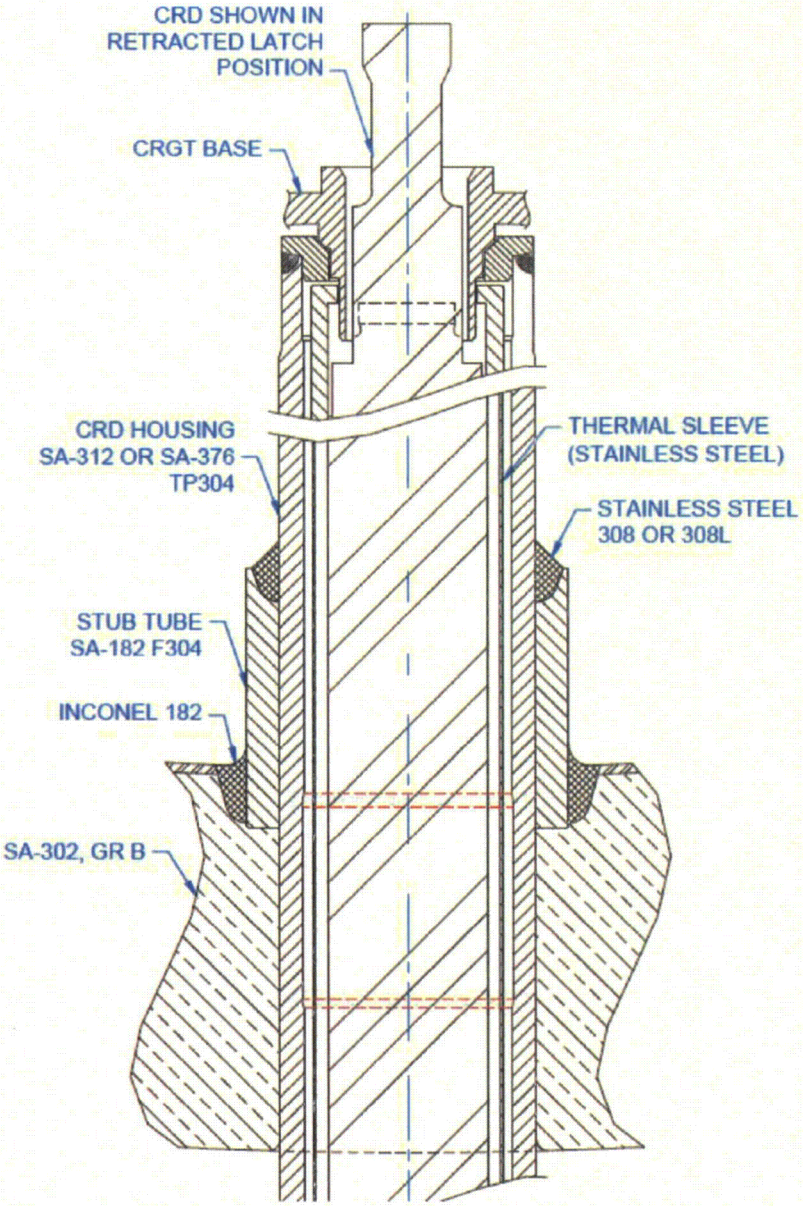

Figure 1-2: Modified CRD Penetration

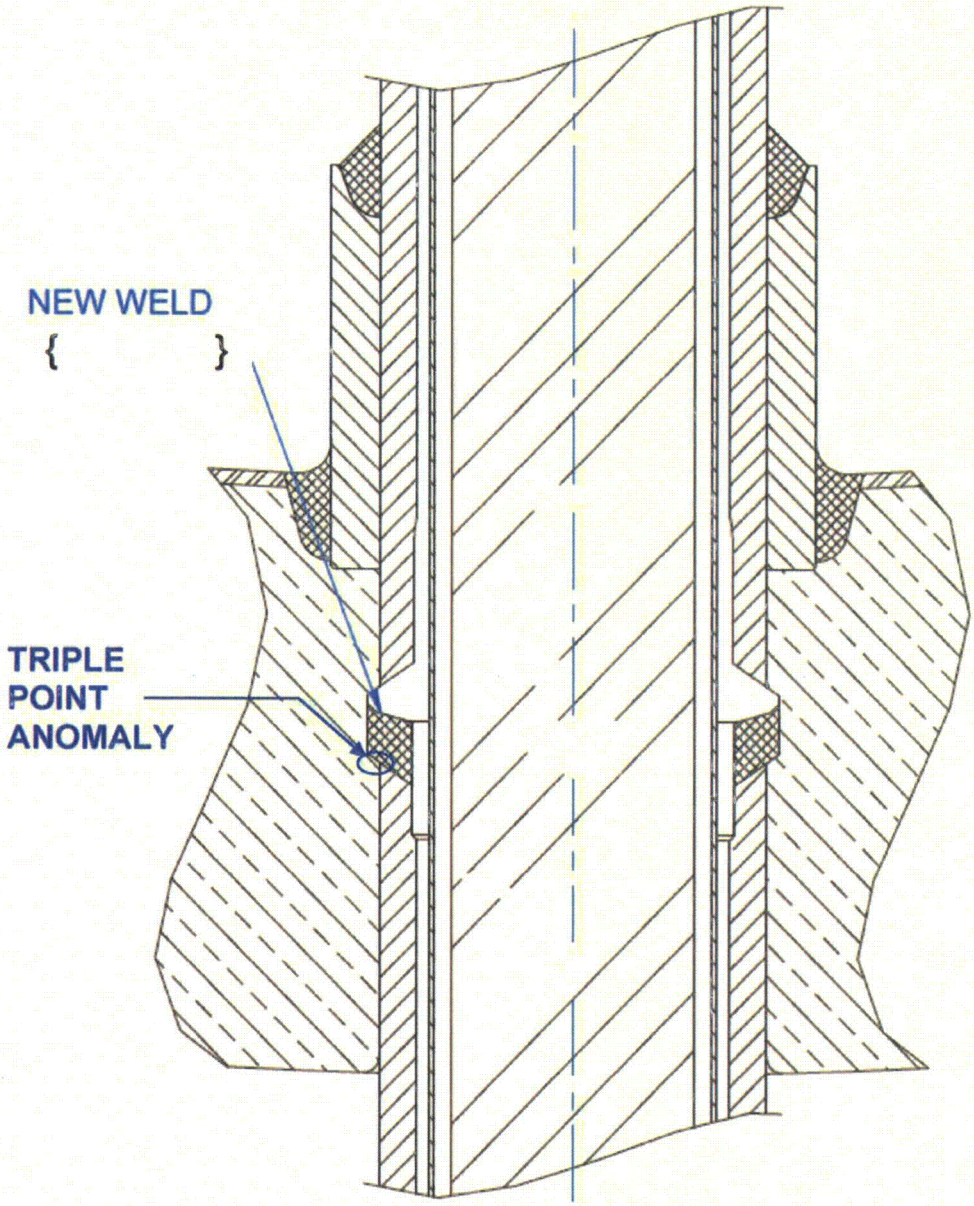

1.3 Postulated Flaws

The triple point weld anomaly is postulated to be semi-circular in shape with an initial depth of 0.1", as indicated in Figure 1-2. It is further assumed that the anomaly extends 360° around the new repair weld. Three flaw types are postulated to simulate various orientations and propagation directions for the weld anomaly. A circumferential flaw and an axial flaw at the outside surface of the new weld would both propagate in the horizontal direction toward the inside surface of the new weld. A cylindrically oriented flaw along the interface between the weld and RV lower head would propagate upward between the two components. The horizontal and vertical flaw propagation directions are represented in Figure 1-3 by separate paths for the downhill and uphill sides of the CRD housing, as discussed below. For both these directions, fatigue crack growth will be calculated considering the most susceptible material for flaw propagation.

Horizontal Direction (Paths 1 and 2):

Flaw propagation is across the CRD housing wall thickness from the OD to the ID of the CRD housing. This is the shortest path through the component wall, passing through the new SS weld material (Figure 1-3).

For completeness, two types of flaws are postulated at the outside surface of the tube. A 360° continuous circumferential flaw, lying in a horizontal plane, is considered to be a conservative representation of crack-like defects that may exist in the weld anomaly. This flaw would be subjected to axial stresses in the tube. An axially oriented semi-circular outside surface flaw is also considered since it would lie in a plane that is normal to the higher circumferential stresses. Both of these flaws would propagate toward the inside surface of the tube.

Vertical Direction (Paths 3 through 6):

Flaw propagation is at the outside surface of the repair weld between the weld and the RV head. A continuous surface flaw is postulated to lie along this cylindrical interface between the two materials. This flaw, driven by radial stresses, may propagate along either the new SS weld material or the low alloy steel RV head material. Flaws along Paths 3 and 4 are postulated in the weld and flaws along Paths 5 and 6 are postulated in the low alloy steel RV lower head (Figure 1-3).

Figure 1-3: Illustration of Crack Propagation Paths

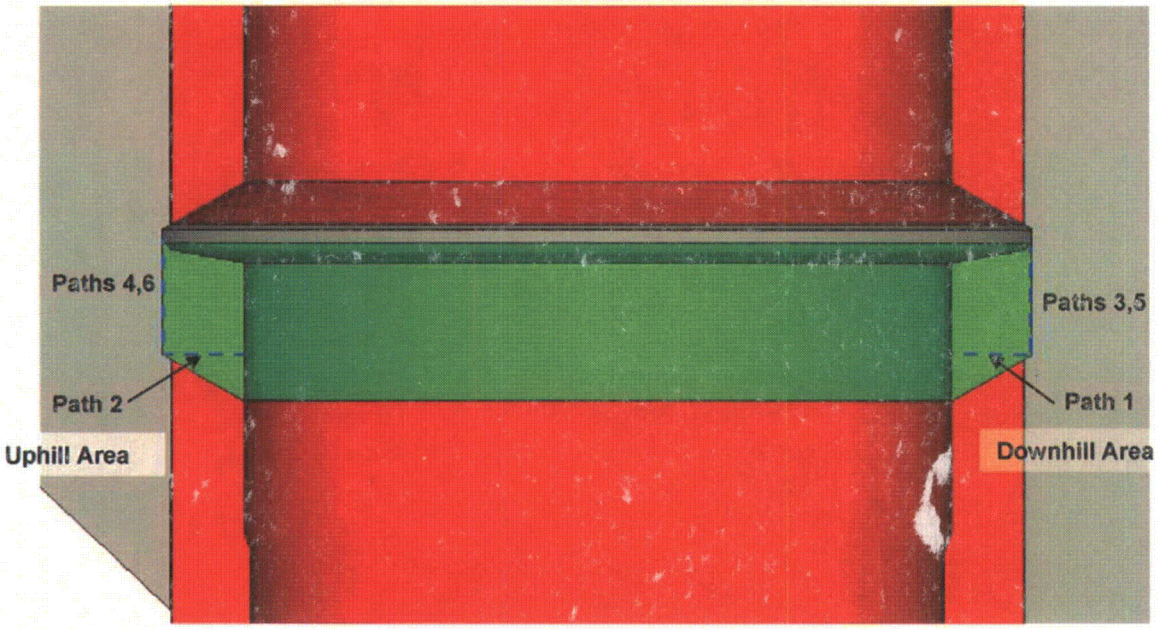

2.0 ANALYTICAL METHODOLOGY

This section presents several aspects of linear elastic fracture mechanics (LEFM) and limit load analysis (used to address the ductile SS weld materials) that form the basis of the present flaw evaluations. As discussed in Section 1.3, flaw evaluations are performed for the flaw propagation paths defined in Figure 1-3.

2.1 Stress Intensity Factor (SIF) Solutions

Three flaw types are postulated for the current evaluation of the weld anomaly defect at the triple point. For paths 1 and 2 both 360° circumferential and axial surface flaws at the OD of the IDTB weld are postulated. The solutions for both types of flaws are available in the AREVACGC [4] code which implements the Stress Intensity Factor (SIF) evaluation for these types of flaws using the weight function method. AREVACGC performs the fatigue crack growth calculations. The schematics for both the 360° circumferential and axial flaws postulated at the OD of the IDTB weld are illustrated in Figure 2-1 and Figure 2-2, respectively.

For the vertical paths (3 through 6), a cylindrical flaw is postulated along the interface between the new repair weld and the RV head material. The potential for flaw propagation along this interface is likely if radial stresses are significant between the weld and head. This assessment utilizes an SIF solution for a continuous surface crack in a flat plate from Appendix A of the 2004 Edition of Section XI of the ASME B&PV Code [3]. Flat plate solutions are routinely used to evaluate flaws in cylindrical components such as the repair weld. The flat plate solution is inherently conservative for this

application since the added constraint provided by the cylindrical structure reduces the crack opening displacements. Crack growth analysis is performed considering propagation through the SS weld metal or the low alloy steel head material. To facilitate the calculation of the SIF for the cylindrical flaw, a visual basic code, KI_edge, was developed based on the theory in Appendix A of the 2004 Edition of Section XI of the ASME B&PV Code [3]. Appendix A of this document provides verification of the KI_edge visual basic function against hand calculations.

Figure 2-1: OD, Partial Through-Wall, 360° Circumferential Flaw

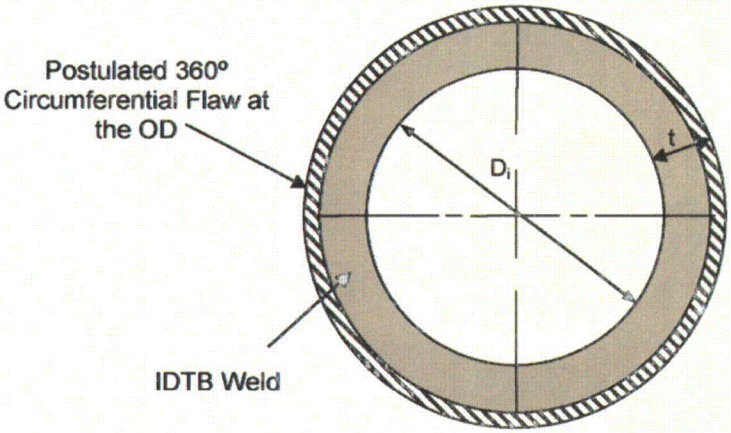

Figure 2-2: OD, Partial Through-Wall, Semi-elliptical Axial Flaw

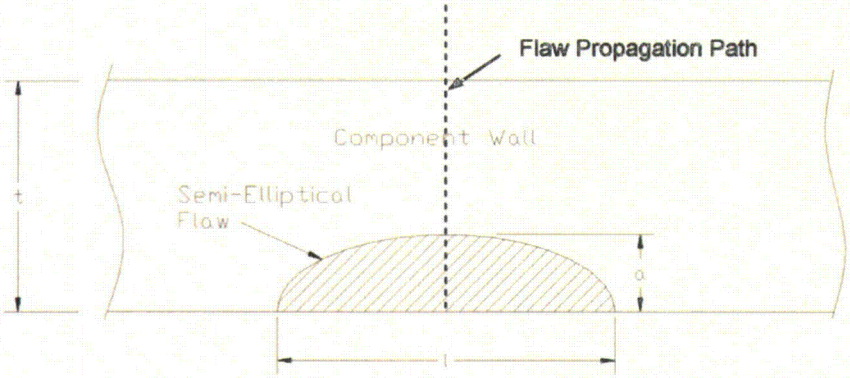

where, a = initial flaw depth = 0.100 inch

l = 2c = flaw length = 0.200 inch

t = wall thickness = { } inch

2.2 Fatigue Crack Growth Laws

Flaw growth due to fatigue is characterized by

$$\frac{da}{dN} = C_o(\Delta K_I)^n$$

where C_o and n are constants that depend on the material and environmental conditions, ΔK_I is the range of applied stress intensity factor in terms of ksi$\sqrt{in}$, and da/dN is the incremental flaw growth in terms of inches/cycle. For the embedded weld anomaly considered in the present analysis, it is appropriate to use crack growth rates for an air environment. Fatigue crack growth is also dependent on the ratio of the minimum to the maximum stress intensity factor; i.e.,

$$R = (K_1)_{min} / (K_1)_{max}$$

<u>SA-302 Grade B Low Alloy Steel Material (RV Lower Head)</u>

From Article A-4300 of the 2004 Edition with No Addendum of Section XI [3], the fatigue crack growth constants for flaws in an air environment are:

$$n = 3.07$$
$$C_o = 1.99 \times 10^{-10}\ S$$

S is a scaling parameter to account for the R ratio and is given by $S = 25.72\ (2.88 - R)^{-3.07}$, where $0 \le R \le 1$ and $\Delta K_I = K_{max} - K_{min}$. For $R < 0$, ΔK_I depends on the crack depth, a, and the flow stress, σ_f. The flow stress is defined by $\sigma_f = ½(\sigma_{ys} + \sigma_{ult})$, where σ_{ys} is the yield strength and σ_{ult} is the ultimate tensile strength. For $-2 \le R \le 0$ and $K_{max} - K_{min} \le 1.12\ \sigma_f\sqrt{\pi a}$, S=1 and $\Delta K_I = K_{max}$. For $R < -2$ and $K_{max} - K_{min} \le 1.12\ \sigma_f\sqrt{\pi a}$, S=1 and $\Delta K_I = (1 - R)\ K_{max}/3$. For $R < 0$ and $K_{max} - K_{min} > 1.12\ \sigma_f\sqrt{\pi a}$, S = 1 and $\Delta K_I = K_{max} - K_{min}$.

<u>{ } Weld Metal</u>

Fatigue crack growth rates for austenitic stainless steels are used to predict flaw growth in the stainless steel { } repair weld. From Article C-8410 of the 2004 Edition with no Addendum of Section XI of the ASME B&PV Code [3], the fatigue crack growth constants for flaws in an air environment are:

$$n = 3.3$$
$$C_o = C \times S$$

where

$$C = 10^{[-10.009 + 8.12E\text{-}4 \times T - 1.13E\text{-}6 \times T^2 + 1.02E\text{-}9 \times T^3]}$$

S =	1.0	for	$R \le 0$
=	1.0 + 1.8R	for	$0 < R \le 0.79$
=	-43.35 + 57.97R	for	$0.79 < R < 1.0$

2.3 Fatigue Crack Growth Calculations

For the flaw types postulated along paths 1 and 2, the AREVACGC [4] EXCEL based program will be used to perform the fatigue crack growth calculation and estimate the final flaw size.

For the cylindrical flaw postulated along paths 3 through 6, crack growth was estimated using EXCEL spread sheets. Crack growth for paths 3 through 6 is calculated by incrementally adding crack growth for one year at the time. Crack growth for one year is the summation of crack growth due to all transients for one year. Crack growth is incrementally linked such that the crack growth contribution from one transient is used to update the crack depth for the subsequent transient.

2.4 Acceptance Criteria

For postulated axial and circumferential flaws in the { } repair weld the acceptance criteria in IWB-3642 [3] is used. IWB-3642 [3] states that "piping containing flaws exceeding the acceptance standards of IWB-3514.1 may be evaluated using analytical procedures described in Appendix C and is acceptable for continued service during the evaluated time period when the critical flaw parameters satisfy the criteria in Appendix C." Based on Figure C-4210-1 of Reference [3], for a flaw in austenitic weld material that uses flux welds, Section C-6000 [3] is to be used for flaw evaluation.

For the postulated cylindrical flaw in the low alloy steel RV lower head material and in the { } IDTB repair weld, IWB-3612 acceptance criteria of Section XI [3] is used. According to IWB-3612 a flaw is acceptable if the applied stress intensity factor for the flaw dimension a_f satisfy the following criteria.

(a) For normal and upset conditions:

$$K_I < K_{Ia} / \sqrt{10}$$

where

K_I = applied stress intensity factor for normal, upset, and test conditions for the flaw dimension a_f.

K_{Ia} = fracture toughness based on crack arrest for the corresponding crack-tip temperature

a_f = end-of-evaluation-period flaw depth

(b) For emergency and faulted conditions:

$$K_I < K_{Ic} / \sqrt{2}$$

K_{Ic} = fracture toughness based on crack initiation for the corresponding crack-tip temperature

3.0 ASSUMPTIONS

This section discusses assumptions and modeling simplifications applicable to the present evaluation of NMP-1 strain induced corrosion crack growth.

3.1 Unverified Assumption

1) This document contains no unverified assumptions.

3.2 Justified Assumption

1) The anomaly is postulated to include a "crack-like" defect, located at the "triple-point" location. For analytical purposes, a continuous circumferential flaw is located in the horizontal plane. Another continuous flaw is located in the cylindrical plane between the weld and Reactor Vessel (RV) lower head.
2) In the radial plane, the anomaly is assumed to include a quarter-circular "crack-like" defect. For analytical purposes, a semi-circular flaw is used to represent the radial cross-section of the anomaly.
3) Dimensions used for the analyses are based on nominal values. This is considered to be standard practice in stress analysis and fracture mechanics analysis.

4.0 DESIGN INPUTS

The region of interest for the present flaw evaluations is the triple point, where three different materials intersect. These materials are the CRD housing material, the new IDTB repair weld material and the RV lower head material. The NMP-1 CRD housing is made from SA-312 OR SA-376 TP304 material to ASME specification [1]. The new weld, as noted in Section 1.2, is made from { } [1]. The RV lower head is fabricated from SA-302 Grade B [1].

4.1 Geometry

Pertinent geometry parameters used for flaw evaluations are provided below:

Paths 1 & 2

The following dimensions are used for evaluating the 360° circumferential flaw and axial flaw postulated along paths 1 &2

Outside Diameter, D_o = { } in [2]
Inside Diameter, D_i = { } in [2]
Thickness, t = { } in
Initial flaw depth, a_i = 0.1 in [1]

Paths 3 through 6

The cylindrical flaws postulated along paths 3 through 6 propagate along the interface between the repair weld and the RV head. The length of this interface is taken as { } inches [2]. The initial flaw depth is postulated to be 0.1 inches [1].

4.2 Material Strength

Reference [5] provides the material strength pertinent for the flaw evaluation assessment of the weld anomaly in this document. Table 4-1 lists the values of yield strength (σ_y), ultimate strength (σ_{ult}), and the flow strength (σ_f), taken as the average of the ultimate and yield strengths.

Table 4-1: Material Strength

Material	Component	Temperature (°F)	Yield Strength, σ_y (ksi)	Ultimate Strength, σ_{ult} (ksi)	Flow Strength, σ_f (ksi)
SA 302 Grade B Low Alloy Steel	RV Lower Head	{ }	{ }	{ }	{ }
		{ }	{ }	{ }	{ }
		{ }	{ }	{ }	{ }
Weld Filler {ER309L}	IDTB Weld	{ }	{ }	{ }	{ }
		{ }	{ }	{ }	{ }
		{ }	{ }	{ }	{ }

4.3 Fracture Toughness

4.3.1 Low Alloy Steel RV Head Material

As discussed in Appendix B, the RT_{NDT} for the low alloy steel RV head is { } °F, however, an RT_{NDT} value of { } °F is used in this document for added conservatism. Fracture toughness curves for SA-533 Grade B Class 1, SA-508 Class 2 and Class 3 materials are illustrated in Figure A-4200-1 of Reference [3]. The RV head material SA-302 GR B has material strength properties identical to that of SA-533 GR B and hence fracture toughness curve from Figure A-4200-1 is used. At an operating temperature of about { } °F, the K_{Ia} fracture toughness values for this material (using an assumed RT_{NDT} of { } °F) are above 200 ksi√in. An upper bound value of 200 ksi√in will be conservatively used for the present flaw evaluations.

4.3.2 { } Materials

Brittle fracture is not a credible failure mechanism for ductile materials such as { }, the failure mechanism for the { } materials is limit load or ductile crack extension (EPFM). A value of 200 ksi√in will be conservatively used for the fracture toughness of { }. This will be used to evaluate the IWB-3612 acceptance criteria for the cylindrical flaw postulated in the repair weld since a limit load solution is not available in the ASME B&PV CODE [3] for such a flaw.

4.4 Applied Stresses Intensity Factor Calculation

As mentioned in Section 2.1, the weight function method implemented in AREVACGC [4] was used to calculate the SIF for the continuous OD circumferential and axial surface flaws. For the cylindrical flaw, the SIF solution given in Appendix A of the 2004 Edition of Section XI [3] was used to calculate the SIF solution.

4.4.1 Transient Stresses

The cyclic operating stresses that are needed to calculate fatigue crack growth are obtained from a thermo-elastic finite element analysis [6]. These cyclic stresses are developed for all the transients at a number of time points to capture the maximum and minimum stresses due to fluctuations in pressure and temperature. Per References [5,7], the number of RCS design transients is established for 40 years of design life. Cyclic operating stresses were generated in Reference [6] for the transients listed in References [5,7]. The transients that have trivial contribution to fatigue are not considered per Reference [6]. The transient cycle counts used in this calculation are obtained from References [5,7]. The operating transients are listed in Table 4-2.

Table 4-2: Load Combinations and Cycles

Service Level	Transient/Condition	Loading	Design Cycles
Level A			
Level A			
Level A			
Level A			
Level A			
Level B			
Level B			
Level B			
Level B			
Level B			
Level C			
Level C			

[1] SENSB is SCRAM End of Stroke, No Buffer see next section for numerical value
[2] { } cycles were used for this transient. Results will be conservative.

4.4.2 External Loads

Stresses due to external loads (dead weight (DW), Seismic, and Stuck Rod Load) were calculated in Reference [6]. Table 4-3 shows the external loads and the stresses due to the external loads. Theses stresses are applicable to the 360° circumferential flaw. For fatigue crack growth the seismic stress are superimposed on the steady state stresses at the end of startup transient. { } cycles of seismic are used for the fatigue crack growth.

Table 4-3: Stresses due to External Loads

External Load Type	Load	Stress
Dead Weight (DW)	{ } lb	{ } psi
Seismic Axial Load (DW + Seismic)	{ } lb	± { } psi
Seismic Bending moment	{ } in-lb	± { } psi
Stuck Rod Load	{ } lb	{ } psi

4.4.3 Residual Stresses

A three-dimensional elastic-plastic finite element analysis [8] was performed to simulate the sequence of steps involved in arriving at the configuration of the weld repair of CRD housing at the lower head of reactor vessel of Nine Mile Point Unit 1 (NMP-1). The residual stress analysis [8] simulated welding of the weld repair with { }. Operation at steady state temperature and pressure conditions and return to zero load conditions was also simulated after the completion of the weld simulation.

5.0 CALCULATIONS

Assessment of a flaw like triple point anomaly in the NMP-1 CRD housing repair was completed using three flaw types that were postulated to form in the vicinity of the triple point. For every postulated flaw type a crack growth analysis was conducted to determine the final flaw size after 40 years of operation. After the final flaw size is determined, the flaw is assessed to determine the safety margins and compliance with the flaw acceptance criteria outlined in Section 2.4.

5.1 Circumferential Flaw for Paths 1 & 2

5.1.1 Circumferential Flaw Growth Analysis (Paths 1 & 2)

AREVACGC [4] was used to determine the final flaw depth due to fatigue crack growth. A summary of the final flaw depths is given in Table 5-1 for paths 1 & 2. Contribution of the individual transients to crack growth is given in Table 5-2.

Table 5-1: Crack Growth for 360° Circumferential Flaw

Path	Path1	Path2
Initial Flaw Depth (in) =	0.1000	0.1000
Initial a/t ratio =	0.1695	0.1695
Final Flaw Depth (in) =	{ }	{ }
Final a/t ratio =	{ }	{ }
Total Amount of Fatigue Crack Growth (in) =	{ }	{ }

Table 5-2: Individual Transient Contribution to Crack Growth for 360° Circumferential Flaw

Path	Path 1		Path2	
Trans.	Growth (in)	Percent	Growth (in)	Percent
Normal Startup	{			}
Normal Shutdown				
Blowdown				
Design Pressure Test				
SCRAM				
Loss of CRD Cooling Water				
Attempt Drive Withdrawal				
Loss of Feed water Pump				
Emergency Cooldown				
Shutdown Cooling				
Level C Definition 1				
Level C Definition 2				
Seismic				

5.1.2 Flaw Evaluation for OD Circumferential Flaw (Paths 1 & 2)

As mentioned in Section 2.4, Article C-6000 of Reference [3] contains the appropriate flaw evaluation procedure for the end of life OD circumferential flaw. Since the final flaw depth along path1 ({ } in) is greater that for path 2 ({ } in), the final flaw depth for path 1 was used for the end of life flaw evaluation. Table 5-3 shows details of the end of life flaw evaluation analysis performed to assess the postulated continuous circumferential flaw. It is seen from Table 5-3 that the allowable stress is higher than the applied membrane stress by { }.

Table 5-3: End of Life Evaluation for Continuous External Circumferential Flaw (Limit Load)

Yield strength, σ_y=	{ }	ksi
Ultimate strength, σ_u=	{ }	ksi
Pressure, p=	{ }	psi
Outside Radius, R_o=	{ }	in
Inside Radius, R_i=	{ }	in
Mean Radius, R_m=	{ }	in
Thickness, t=	{ }	in
Area, $A=\pi(R_o^2-R_i^2)$=	{ }	in^2
Moment of Inertia, $I=\pi/4(R_o^4-R_i^4)$=	{ }	in^4
Final Flaw Depth, a_f=	{ }	in
Flow strength, σ_f=	{ }	ksi
DW+SENSB+Seismic Axial Load , P_{axial}=	{ }	lb
Seismic Bending	{ }	in-lb
$\sigma_b=M_bR_o/I$=	{ }	ksi
$\sigma_m=pD_o/4t + P_{axial}/A$=	{ }	ksi
Safety Factor, SF_b=	{ }	
Safety Factor, SF_m=	{ }	
$\beta=(\pi/(2-a/t)[1-a/t-\sigma_m/\sigma_f]$	{ }	rad
$\sigma_b^c=(2\sigma_f/\pi)[2-(a/t)]\sin(\beta)$	{ }	ksi
Z=1.30 [(1+ 0.010(NPS − 4)]	{ }	
σ_e=	{ }	
$S_c=1/(SFb)[\sigma_b^c/Z-\sigma_e]-\sigma_m[1-1/Z(SF_m)]$=	{ }	ksi
θ=	{ }	rad
$\sigma_m^c=\sigma_f/[1-(a/t)(\theta/\pi)-2\phi/\pi]$=	{ }	ksi
$\phi=\arcsin[0.5(a/t)\sin\theta]$=	{ }	rad
$S_t=s_m^c/ZSF_m$	{ }	ksi
Margin, S_c/σ_b	{ }	
Margin, S_t/σ_m	{ }	

5.2 Axial Flaw for Paths 1 & 2

5.2.1 Axial Flaw Growth Analysis (Paths 1 & 2)

AREVACGC [4] was used to determine the final flaw depth due to fatigue crack growth. For each path (1 & 2) crack growth was performed using depth location (radial) and surface location (axial) SIF. A summary of the final flaw depths is given in Table 5-4 for paths 1 & 2. Contribution of the individual transients to crack growth is given in Table 5-5.

Table 5-4: Crack Growth for Axial Flaw

	Radial		Axial	
Path	Path1	Path2	Path1	Path2
Initial Flaw Depth (in) =	0.1000	0.1000	0.1000	0.1000
Initial a/t ratio =	0.1695	0.1695	0.1695	0.1695
Final Flaw Depth (in) =				
Final a/t ratio =				
Total Amount of Fatigue Crack Growth (in) =				

Table 5-5: Individual Transient Contribution to Crack Growth for Axial Flaw

	Radial Growth				Axial Growth			
	Path 1		Path2		Path 1		Path2	
Trans.	Growth (in)	Percent	Growth (in)	Percent	Growth (in)	Percent	Growth (in)	Percent
Normal Startup								
Normal Shutdown								
Blowdown								
Design Pressure Test								
SCRAM								
Loss of CRD Cooling Water								
Attempt Drive Withdrawal								
Loss of Feed water Pump								
Emergency Cooldown								
Shutdown Cooling								
Level C Definition 1								
Level C Definition 2								

5.2.2 Flaw Evaluation for OD Axial Flaw (Paths 1 & 2)

As mentioned in Section 2.4, Article C-6000 of Reference [3] contains the appropriate flaw evaluation procedure for the end of life OD axial flaw. As shown in Table 5-4 the maximum flaw depth is { } in for a flaw along path 2 considering an axial crack growth of { } in. This flaw depth was used for the end of life flaw evaluation of the postulated OD axial flaw. Table 5-6 shows details of the end of life flaw evaluation of the postulated OD axial flaw. It is shown in Table 5-6, that both the final flaw depth and length, after 40 years of crack growth, are less than the allowable flaw depth and length.

Table 5-6: End of Life Evaluation for External Axial Flaw (Limit Load)

Yield strength, σ_y=	{ }	ksi
Ultimate strength, σ_u=	{ }	ksi
Flow strength, σ_f=	{ }	ksi
Pressure, p=	{ }	psi
Outside Radius, R_o=	{ }	In
Inside Radius, R_i=	{ }	In
Mean Radius, R_m=	{ }	In
Thickness, t=	{ }	In
Final Flaw Depth, a_f=	{ }	In
Final Flaw Length, l_f=	{ }	
$\sigma_h=pR_m/t$=	{ }	ksi
$l_{allow}=1.58(R_m t)^{0.5}[(\sigma_h/\sigma_f)^2-1]^{0.5}$=	{ }	In
$M_2=[1+(1.61/4R_m t)\, l_f)]$=	{ }	
Safety Factor, SF_m=	{ }	
Stress Ratio $=\sigma_h/\sigma_f$=	{ }	
Non-dimensional Flaw Length, $l_f/\sqrt{R_m t}$=	{ }	
Allowable a/t =	{ }	TABLE C-6410-1 Reference [3]
Allowable Flaw Depth, a_{allow} =	{ }	> { }
Margin, a_{allow}/a_f=	{ }	

5.3 Cylindrical Flaw for Paths 3 - 6

5.3.1 Cylindrical Flaw Growth Analysis (Paths 3 – 6)

For the cylindrical flaws crack growth was calculated in accordance with Section 2.3. Crack growth for one year is shown in Table 5-7 through Table 5-10 for paths 3 through 6, respectively. The maximum crack depth for the postulated cylindrical flaws after 40 years of operation was found to be { } Inches along path 3. Final crack depths for the cylindrical flaws for all paths is shown in Table 5-11

Table 5-7: Initial Crack Growth for Cylindrical Flaw along Path 3

Transient	K_{max} (ksi√in)	K_{min} (ksi√in)	ΔK (ksi√in)	ΔN (Cycle/year)	$\Delta a=\Delta N\ C_o(\Delta K)^n$ (in)
Normal Startup					
Normal Shutdown					
Blowdown					
Design Pressure Test					
SCRAM					
Loss of CRD Cooling Water					
Attempt Drive Withdrawal					
Loss of Feed water Pump					
Emergency Cooldown					
Shutdown Cooling					
Level C Definition 1					
Level C Definition 2					

Table 5-8: Initial Crack Growth for Cylindrical Flaw along Path 4

Transient	K_{max} (ksi√in)	K_{min} (ksi√in)	ΔK (ksi√in)	ΔN (Cycle/year)	$\Delta a=\Delta N\ C_o(\Delta K)^n$ (in)
Normal Startup					
Normal Shutdown					
Blowdown					
Design Pressure Test					
SCRAM					
Loss of CRD Cooling Water					
Attempt Drive Withdrawal					
Loss of Feed water Pump					
Emergency Cooldown					
Shutdown Cooling					
Level C Definition 1					
Level C Definition 2					

Table 5-9: Initial Crack Growth for Cylindrical Flaw along Path 5

Transient	K_{max} (ksi√in)	K_{min} (ksi√in)	ΔK (ksi√in)	ΔN (Cycle/year)	$\Delta a = \Delta N\ C_o(\Delta K)^n$ (in)
Normal Startup					
Normal Shutdown					
Blowdown					
Design Pressure Test					
SCRAM					
Loss of CRD Cooling Water					
Attempt Drive Withdrawal					
Loss of Feed water Pump					
Emergency Cooldown					
Shutdown Cooling					
Level C Definition 1					
Level C Definition 2					

Table 5-10: Initial Crack Growth for Cylindrical Flaw along Path 6

Transient	K_{max} (ksi√in)	K_{min} (ksi√in)	ΔK (ksi√in)	ΔN (Cycle/year)	$\Delta a = \Delta N\ C_o(\Delta K)^n$ (in)
Normal Startup					
Normal Shutdown					
Blowdown					
Design Pressure Test					
SCRAM					
Loss of CRD Cooling Water					
Attempt Drive Withdrawal					
Loss of Feed water Pump					
Emergency Cooldown					
Shutdown Cooling					
Level C Definition 1					
Level C Definition 2					

Table 5-11: Final Crack Depth for Cylindrical Flaw

	Crack Depth (in)
Path3	
Path4	
Path5	
Path6	

5.3.2 Fracture Toughness Margin for Cylindrical Flaw (Paths 3 – 6)

As mentioned in Section 2.4, for the postulated cylindrical flaw in the low alloy steel RV lower head material and in the IDTB weld ({ER309L}), IWB-3612 acceptance criteria of Section XI [3] is used. According to IWB-3612 a flaw is acceptable if the applied stress intensity factor for the flaw dimension a_f satisfy the criteria that $K_I < K_{Ia} /\sqrt{10}$ for normal/upset conditions and $K_I < K_{Ic} /\sqrt{2}$ for emergency/faulted conditions. To determine the fracture toughness margin, the maximum applied stress intensity factor for all time points is determined for each flaw path. The effective stress intensity factor is then determined based on the theory in Reference [3]. The temperature (T) is the minimum (limiting) temperature of each transient. The minimum temperatures of most limiting transients are shown along with corresponding K_{Ia}'s are shown in Table 5-12. In Table 5-12, it is shown that the calculated minimum LEFM margins are { } for service level A and B and { } for service level C, and are thus higher than the required margin of $\sqrt{10}$ and $\sqrt{2}$, respectively.

Table 5-12: LEFM Margin for Cylindrical Flaw

	Path	Limiting Transients	a_f (in)	K_{Ieff} (ksi√in)	Temperature (°F)	K_{Ia} (ksi√in)	Margin K_{Ia}/K_{Ieff}
Levels A & B	3 (Weld)						
	4 (Weld)						
	5 (Head)						
	6 (Head)						
						K_{Ic} (ksi√in)	K_{Ic}/K_{Ieff}
Level C	3 (Weld)						
	4 (Weld)						
	5 (Head)						
	6 (Head)						

6.0 SUMMARY OF RESULTS AND CONCLUSION

The flaw evaluation results for 40 years of fatigue crack growth are as follows.

6.1 Fatigue Crack Growth of Continuous External Circumferential Flaw

a) Fatigue crack growth analysis:
Initial flaw size, a_i = 0.100 in.
Final flaw size, a_f = { } in.
b) End of Life (Limit load) analysis:
Margin, S_y/σ_m = { }

6.2 Fatigue Crack Growth of Semi-Circular External Axial Flaw

a) Fatigue crack growth analysis:

Initial flaw size,	a_i = 0.100 in.
Final flaw size,	a_f = { } in.
b) End of Life (Limit load) analysis:	
Margin,	a_{allow}/a_f= { }

6.3 Fatigue Crack Growth of Continuous Cylindrical Flaw along

RV Lower Head

Initial flaw size,	a_i = 0.100 in.
Final flaw size,	a_f = { } in.
Level A and B Stress intensity factor at final flaw size,	K_{Ieff} = { } ksi√in
Level A and B Fracture toughness	K_{Ia} = { } ksi√in
Level A and B Fracture toughness margin,	K_{Ia}/K_{Ieff} ={ } > √10
Level C Stress intensity factor at final flaw size,	K_{Ieff} = { } ksi√in
Level C Fracture toughness	K_{IC} = 200 ksi√in
Level C Fracture toughness margin,	K_{IC}/K_{Ieff} ={ } > √2

RV IDTB Weld

Initial flaw size,	a_i = 0.100 in.
Final flaw size,	a_f = { } in.
Level A and B Stress intensity factor at final flaw size,	K_{Ieff} = { } ksi√in
Level A and B Fracture toughness	K_{Ia} = 200 ksi√in
Level A and B Fracture toughness margin,	K_{Ia}/K_{Ieff} ={ } > √10
Level C Stress intensity factor at final flaw size,	K_{Ieff} = { } ksi√in
Level C Fracture toughness	K_{IC} = 200 ksi√in
Level C Fracture toughness margin,	K_{IC}/K_{Ieff} ={ } > √2

The results of the analysis demonstrate that a 0.10 inch weld anomaly is acceptable for a 40 year design life of the NMP-1 CRD housing weld repair. Significant fracture toughness margins have been demonstrated for the postulated cylindrical flaw. The minimum fracture toughness margins for flaw propagation Paths 3 through 6 have been shown to be acceptable as compared to the required margins of √10 for normal/upset conditions and √2 for emergency/faulted conditions per Section XI, IWB-3612 (Reference [3]). The maximum final flaw size is about { } inch (considering all flaw propagation paths). A limit load analysis with stable crack extension (Z-factors) was performed considering the ductile weld repair material along flaw propagation Path 1 & 2. The analysis showed that for the postulated circumferential flaw the minimum margin on allowable stress is { }. For the axial flaw the minimum margin on allowable flaw depth is { }.

7.0 COMPUTER USAGE

7.1 Validation

To validate the installation of AREVACGC 5.0 [4], Test Case 1 provided in Reference [4] (contained in TestCase1.xls) was executed. The installation of the software on a PC workstation is documented below.

Computer program tested: AREVACG 5.0

Computer hardware used: Dell Precision 470 Workstation Tag # SN 69BVCH1

Name of person running test: S H. Mahmoud

Date of test: 1-6-2011

Acceptability: Results agree with those documented for the corresponding test case in References [4].

7.2 Computer Files

Microsoft® Office Excel, along with the Excel macro program AREVACGC version 5.0, is used in the crack growth and SIF calculation. All computer analyses were run on Microsoft® XP Professional Version 2002 Service Pack 3. The hardware is Intel® Xeon® E5420 with 2.49 GHz, and 3.25 GB of RAM. Computer files for all analysis contained in this document are listed in Table7-1. These files have been stored in COLDSTOR server within the directory "\cold\41304\32-9138065-001\official. All files were uploaded to COLDSTOR on 03/15/2011.

Table7-1: Computer Files for Crack Growth Evaluation

File Name	Date Modified	Cheksum	Description
NMP_Circ_SZ(axial).xls	3/15/2011	44738	Circumferential flaw evaluation with AREVACGC
NMP_Axial_SY(Hoop).xls	1/5/2011	53185	Axial flaw evaluation with AREVACGC
NMP_Edge_SRP3.xls	1/6/2011	05851	Cylindrical Flaw Evaluation Path 3
NMP_Edge_SRP4.xls	1/6/2011	55757	Cylindrical Flaw Evaluation Path 4
NMP_Edge_SRP5.xls	3/15/2011	60899	Cylindrical Flaw Evaluation Path 5
NMP_Edge_SRP6.xls	3/15/2011	59330	Cylindrical Flaw Evaluation Path 6
TestCase1.xls	6/29/2010	17753	Test case for verifying that AREVCGC 5.0 executes properly
K1_edge_Verification.xls	1/6/2011	41940	Verification of K1_edge function

8.0 REFERENCES

1. AREVA NP Document 08-9132350-002, "Design Specification for Nine Mile Point 1 Control Rod Drive Housing Modification."
2. AREVA NP Drawing 02-8041446D-004, "Design for CRD Housing Modification Nine Mile Point Unit 2 (Penetration U1-U8)."
3. ASME Boiler and Pressure Vessel Code, Section XI, Rules for Inservice Inspection of Nuclear Power Plant Components, 2004 Edition with no Addenda.
4. AREVA NP Document 32-9055891-005, "Fatigue and PWSCC Crack Growth Evaluation Tool AREVACGC."
5. AREVA NP Document 32-9133260-005, "Design Input Document to Support Structural Analysis of NMP-1 CRDH Repair."
6. AREVA NP Document 32-9141306-002, "Nine Mile Point Unit 1 CRDH Weld Repair - Finite Element Analysis."
7. AREVA NP Document 51-9134937-003, "Transients for Nine Mile Point Unit 1 Weld Repair of CRD Nozzles."
8. AREVA NP Document 32-9138064-003, "NMP-1 CRD Housing IDTB Weld Residual Stress Analysis."

APPENDIX A: VERIFICATION OF SIF FOR CYLINDRICAL FLAW

This Appendix provides verification of the Excel macro KI_edge used to calculate the SIF intensity factor for the cylindrical flaw (single edge notch). Also, the Excel macro Kleff_edge which considers plasticity correction is verified. The test case considered in this appendix used a=0.05 inch, t=0.5 inch, a/l=0, and σ_y=41.45 ksi.

Basis: Analysis of Flaws, 2004 ASME Code, Section XI, Appendix A, Reference [3]

$$KI = [A_0 G_0 + A_1 G_1 + A_2 G_2 + A_3 G_3] \sqrt{(\pi a/Q)}$$

where $Q = 1 + 4.593 (a/l)^{1.65} - q_y$

and $q_y = [(A_0 G_0 + A_1 G_1 + A_2 G_2 + A_3 G_3) / \sigma_{ys}]^2 / 6$

For a/l = 0.0 (continuous flaw)
a/t<= 0.1

Go = 1.195
G_1 = 0.773
G_2 = 0.600
G_3 = 0.501

Stresses are described by a third order polynomial fit over the flaw depth.

$$S(x) = A_0 + A_1(x/a) + A_2(x/a)^2 + A_3(x/a)^3$$

For given residual and transient stresses

Wall Position, x (in.)	Residual Stress (ksi)	Transient Stress (ksi)	Total Stresses (ksi)
0.000	12.73	0.132	12.859
0.042	14.69	0.131	14.826
0.083	16.66	0.129	16.792
0.125	16.48	0.127	16.603
0.167	16.29	0.123	16.412
0.208	16.13	0.118	16.248
0.250	15.97	0.116	16.082
0.292	17.28	0.104	17.382
0.333	18.59	0.092	18.678
0.375	17.08	0.078	17.157
0.417	15.57	0.043	15.615
0.458	28.48	-0.029	28.453
0.500	41.39	-0.2940	41.100

Stress over crack face

x/a	x	Interpolated Stress		
0.00	0.000	12.859	A3=	-0.00107
0.10	0.005	13.095	A2=	0.001203
0.20	0.010	13.331	A1=	2.359832
0.30	0.015	13.567	A0=	12.85911
0.40	0.020	13.803		
0.50	0.025	14.039		
0.60	0.030	14.275		
0.70	0.035	14.511		
0.80	0.040	14.747		
0.90	0.045	14.983		
1.00	0.050	15.219		

	$K_I = [A_0 G_0 + A_1 G_1 + A_2 G_2 + A_3 G_3] \sqrt{(\pi a/Q)}$=	6.811
	6.811 K1_edge=	6.811
	0.0% Difference=	0.0%
	$q_y = [(A_0 G_0 + A_1 G_1 + A_2 G_2 + A_3 G_3) / \sigma_{ys}]^2 / 6$=	0.029
Plasticity	$Q=1 + 4.593 (a/l)^{1.65} - q_y$	0.971
Correction	$K_I = [A_0 G_0 + A_1 G_1 + A_2 G_2 + A_3 G_3] \sqrt{(\pi a/Q)}$=	6.911
	K1eff_edge=	6.911
	Difference=	0.0%

APPENDIX B: RT_{NDT} FOR REACTOR VESSEL LOW ALLOY STEEL AND THE HEAT AFFECTED ZONE

The currently proposed CRD repair includes the low alloy steel reactor vessel, { } [a]. Due to the CRD repair location at the bottom of the reactor vessel, the low alloy steel and the heat affected zone (HAZ) from the repair welding are not expected to experience large amounts of fluence, and therefore a shift of RT_{NDT} due to irradiation is negligible.

The weld procedure qualification for the CRD repair was documented in Reference [b]. { }, as allowed by the applicable ASME Boiler & Pressure Vessel Code [c]. ASME Section IX, paragraph QW-256 points the reader to ASME Section IX paragraph QW-403 for base metal. Paragraph QW-403.5 requires welding procedure specifications to be qualified using a base metal listed in the same P Number and Group Number in Table QW/QB-422 as the base metal used in production welding. { }.

Additionally, Paragraph QW-403.11 requires base metals specified in the welding procedure specification be qualified by a procedure qualification test that was made using base metals in accordance with paragraph QW-424. Paragraph QW-424 requires that welding of one metal from a P Number to any metal from any other P Number qualifies any metal assigned to the first P Number to any metal assigned the second P Number. { }.

{

} [d].

B.1 Appendix B References

a. AREVA Document 08-9132350-002, "Nine Mile Point 1 Control Rod Drive Housing Modification."

b. AREVA Document 55-PQ7297-000, "Procedure Qualification Records, PQ7297-000", January 2011.

c. American Society of Mechanical Engineers, Boiler and Pressure Vessel Code Section IX, 2007 Edition with 2009 Addenda.

d*. Engineering Specification for the Nine Mile Point Reactor Pressure Vessel, 21A1194, Revision 0, January 1964.

* This reference is not available for retrieval from the AREVA NP document control system. This reference is retained in the Owners document control system and information therein is cited in this document, as required for design and analyses, in accordance with terms and

condition of the non-disclosure agreement between the AEVA NP and the Owner. Therefore this is an acceptable reference for use per AREVA NP procedure 0402-01, and document number L.500164/T1.1.

for Telecom 3/17/11 — 3/17/11

Project Manger Signature for B. MERRICH — Date

ATTACHMENT 4

AFFIDAVIT FROM AREVA NP INC. JUSTIFYING WITHHOLDING PROPRIETARY INFORMATION

AFFIDAVIT

COMMONWEALTH OF VIRGINIA)
) ss.
COUNTY OF CAMPBELL)

1. My name is Sandra M. Sloan. I am Manager, Regulatory Affairs for New Plants, for AREVA NP Inc. and as such I am authorized to execute this Affidavit.

2. I am familiar with the criteria applied by AREVA NP to determine whether certain AREVA NP information is proprietary. I am familiar with the policies established by AREVA NP to ensure the proper application of these criteria.

3. I am familiar with the AREVA NP information contained in, "32-9138065-002, CRD Housing IDTB Weld Anomaly Analysis," and "32-9146818-000, NMP-1 LAS SCC/SICC Evaluation," and referred to herein as "Documents." Information contained in these Documents have been classified by AREVA NP as proprietary in accordance with the policies established by AREVA NP for the control and protection of proprietary and confidential information.

4. These Documents contains information of a proprietary and confidential nature and is of the type customarily held in confidence by AREVA NP and not made available to the public. Based on my experience, I am aware that other companies regard information of the kind contained in these Documents as proprietary and confidential.

5. These Documents have been made available to the U.S. Nuclear Regulatory Commission in confidence with the request that the information contained in these Documents be withheld from public disclosure. The request for withholding of proprietary information is made in accordance with 10 CFR 2.390. The information for which withholding from disclosure

is requested qualifies under 10 CFR 2.390(a)(4) "Trade secrets and commercial or financial information".

6. The following criteria are customarily applied by AREVA NP to determine whether information should be classified as proprietary:

(a) The information reveals details of AREVA NP's research and development plans and programs or their results.

(b) Use of the information by a competitor would permit the competitor to significantly reduce its expenditures, in time or resources, to design, produce, or market a similar product or service.

(c) The information includes test data or analytical techniques concerning a process, methodology, or component, the application of which results in a competitive advantage for AREVA NP.

(d) The information reveals certain distinguishing aspects of a process, methodology, or component, the exclusive use of which provides a competitive advantage for AREVA NP in product optimization or marketability.

(e) The information is vital to a competitive advantage held by AREVA NP, would be helpful to competitors to AREVA NP, and would likely cause substantial harm to the competitive position of AREVA NP.

The information in these Documents is considered proprietary for the reasons set forth in paragraphs 6(b) and 6(c) above.

7. In accordance with AREVA NP's policies governing the protection and control of information, proprietary information contained in these Documents have been made available, on a limited basis, to others outside AREVA NP only as required and under suitable agreement providing for nondisclosure and limited use of the information.

8. AREVA NP policy requires that proprietary information be kept in a secured file or area and distributed on a need-to-know basis.

9. The foregoing statements are true and correct to the best of my knowledge, information, and belief.

Sandra M. Sloan

SUBSCRIBED before me this 17th
day of March, 2011.

Kathleen A. Bennett

Kathleen A. Bennett
NOTARY PUBLIC, COMMONWEALTH OF VIRGINIA
MY COMMISSION EXPIRES: 8/31/2011
Reg. #110864

KATHLEEN ANN BENNETT
Notary Public
Commonwealth of Virginia
110864
My Commission Expires Aug 31, 2011