FENOC
FirstEnergy Nuclear Operating Company

Perry Nuclear Power Plant
10 Center Road
Perry, Ohio 44081

Mark B. Bezilla
Vice President

440-280-5382
Fax: 440-280-8029

March 28, 2011
L-11-083

ASME Code Section XI, IWA-1400(c)

ATTN: Document Control Desk
U.S. Nuclear Regulatory Commission
Washington, DC 20555-0001

SUBJECT:
Perry Nuclear Power Plant
Docket Number 50-440; License Number NPF-58
Submittal of Perry Nuclear Power Plant Inservice Examination Plan

The American Society of Mechanical Engineers Boiler and Pressure Vessel Code, 2001 Edition through the 2003 Addenda, Section XI, "Rules for Inservice Inspection of Nuclear Power Plant Components," establishes requirements for inservice examination of components and systems in nuclear power plants. IWA-1400(c), "Owner's Responsibility," requires preparation of plans and schedules, and submittal of the plans to the enforcement and regulatory authorities having jurisdiction at the plant site.

In accordance with this requirement, the Perry Nuclear Power Plant (PNPP) inservice examination plan (ISEP) for the current 120-month interval is enclosed, for information.

There are no regulatory commitments contained in this submittal. If there are any questions or if additional information is required, please contact Mr. Thomas A. Lentz, Manager – Fleet Licensing, at 330-761-6071.

Sincerely,

Mark B. Bezilla

Enclosure: Perry Nuclear Power Plant Inservice Examination Plan

cc: NRC Region III Administrator
NRC Resident Inspector Office
NRC Project Manager

A047
NRR

Enclosure to Letter L-11-083

Perry Nuclear Power Plant Inservice Examination Plan

(351 pages follow)

PERRY OPERATIONS MANUAL

Inservice Examination Plan

TITLE: INSERVICE EXAMINATION PLAN

REVISION: 14 EFFECTIVE DATE: 11-8-10

PREPARER: Sean Franklin 8-27-10
/ Date

APPROVER: Scott Seman 10-25-10
/ Date

Inservice Examination Plan

Table of Contents

Section	Title	Page
1.0	INTRODUCTION	1
1.1	Purpose	1
1.2	Scope	1
1.3	Compliance	1
1.4	Glossary	6
1.5	System/Component Classifications	9
1.6	Examination Methods	10
1.7	Instructions and Procedures	13
1.8	Personnel Qualifications	14
1.9	Evaluation Criteria (Characterization Process and Disposition)	14
1.10	Repair/Replacement	16
1.11	Scheduling Criteria	17
1.12	Reporting (ISI Summary Reports and Relief Requests)	20
2.0	IWB (CLASS 1) EXAMINATIONS	21
2.1	Exemptions	23
2.2	Examination Selection Process	24
2.3	Additional Examinations	30
2.4	Successive Examinations	31
2.5	Relief Requests	31
2.6	Inservice Examination Table	70
3.0	IWC (CLASS 2) EXAMINATIONS	129
3.1	Exemptions	130
3.2	Examination Selection Process	130
3.3	Additional Examinations	135
3.4	Successive Examinations	135
3.5	Relief Requests	136
3.6	Inservice Examination Table	143
4.0	IWD (CLASS 3) EXAMINATIONS	188
4.1	Exemptions	188
4.2	Examination Selection Process	188
4.3	Additional Examinations	189
4.4	Successive Examinations	189
4.5	Relief Requests	190
4.6	Inservice Examination Table	193

Inservice Examination Plan

Table of Contents (Cont.)

Section	Title	Page
5.0	IWE/IWL (CLASS MC and CC) EXAMINATIONS	205
5.1	Exemptions	205
5.2	Examination Selection Process	206
5.3	Successive Examinations	207
5.4	Relief Requests	207
5.5	Inservice Examination Table	208
6.0	IWF (CLASS 1, 2, 3 AND MC COMPONENT SUPPORT) EXAMINATIONS	213
6.1	Support Selection and Exemptions	214
6.2	Additional Examinations	215
6.3	Successive Examinations	215
6.4	Relief Requests	216
6.5	Inservice Examination Table	216
7.0	AUGMENTED EXAMINATIONS	287
7.1	Exemptions	294
7.2	Examination Selection Process	294
7.3	Additional Examinations	294
7.4	Successive Examinations	294
7.5	Relief Requests	294
7.6	Inservice Examination Table	295
8.0	SNUBBERS	326
9.0	SYSTEM PRESSURE TESTS	326
9.1	Terminology	326
9.2	Exemptions	326
9.3	Test Pressurization Boundaries	326
9.4	Pressure Testing Following Repair/Replacement Activities	327
9.5	Relief Requests	327
10.0	CALIBRATION STANDARD DRAWINGS	336
10.1	Calibration Standards	336
11.0	ISI DRAWINGS	342
11.1	ISI Piping and Instrumentation Diagrams (P&ID's)	342
11.2	ISI Isometric Drawings	344
	LAST PAGE	345

Inservice Examination Plan

Table of Contents (Cont.)

SCOPE OF REVISION:

Rev. 14 - Released from On Hold with the following changes:

1. Pg. 1 - Sect. 1.2, Scope section was revised to update to the new 3rd Interval, included with new 10-year dates and ASME code editions/addenda's. (600462810)
2. Pg. 2 - Sect. 1.3, Compliance section revised to update to the new 3rd Interval and added 1.3.a through 1.3.h on pgs. 2 - 3 to include 10CFR50.55a limitations. (600299025)
3. Pgs. 3-6 - Revised code cases, NUREG's and BWRVIP doc's to current versions. (600462810)
4. Pg. 6-8 - Revised 1.4.3, 1.4.11, 1.4.22 definitions to align to 01E/03A ASME Section XI.
5. Pg. 9 - Revised section 1.5 to include 10CFR50.2 for classification of Class 1 components.
6. Pgs. 11-12 - Revised definitions for NDE methods in 1.6.2., 1.6.4 through 1.6.8.
7. Pg. 13 - Revised 1.6.10 to align to 01E/03A ASME Section XI and revised 1.7.2 to remove Reg. Guide 1.150, Code Cases N-461 & N-524. (600462810)
8. Pg. 14 - Revised 1.8 to remove code cases N-546 and added NDE written practice NOP-CC-5708.
9. Pg. 15 - Revised 1.9.2 to include ACI-349.3R for concrete containment exams.
10. Pg. 16-17 - Revised 1.9.7 and 1.10 to include new Repair/Replacement Program, NOP-CC-5703.
11. Pg. 18 - Revised 1.11.2 to remove verbiage from 2nd Interval. (600462810) Also, revised titles on 1.11.3.
12. Pg. 19 - Revised 1.11.6 to include outage numbers for 3rd Interval.
13. Pg. 20 - Revised 1.12.2 to align to 10CFR50.55a for request for relief/alternative. (600299025)
14. Pgs. 21-26 - Revised Sect. 2.0 - 2.2.4 to reflect 01E/03A ASME Item #'s, notes, code cases and verbiage for 3rd Interval. (600462810)
15. Pgs. 30-31 - Revised sect. 2.3 & 2.4 to align to 01E/03A ASME Section XI. (600462810)
16. Pgs. 31-69 - Revised Section 2.5 to include 3rd Interval Requests for Relief/Alternatives.

SCOPE OF REVISION (Cont.):

17. Pgs. 72-128 - Revised Section 2.6 Tables to reflect new 3rd Interval schedules and specifically; changed Item # for 1N15-KA to N/A due to ASME exemption, updated outage #'s for DM welds, updated to N-652-1, removed supplemental UT exam for 1B13-CG and removed IR-042 due to code figure change, unscheduled all Cat. B-M-1 exams due to revision of IR-043, unscheduled B13.40 exams due to IR-056, corrected B13.10 exams to show 1B13-54/15-FW instead of -HW, and corrected B-P to align to 01E/03A ASME Section XI. (600462810)
18. Pgs. 129-132 - Revised Sect. 3.0 - 3.2.5 to reflect 01E/03A ASME Item #'s, notes, code cases and verbiage for 3rd Interval. (600462810)
19. Pgs. 135-136 - Revised sect. 3.3 & 3.4 to align to 01E/03A ASME Section XI. (600462810)
20. Pgs. 136-142 - Revised Section 3.5 to include 3rd Interval Requests for Relief/Alternatives.
21. Pgs. 143-186 - Revised Section 3.6 Tables to reflect new 3rd Interval schedules and specifically; unscheduled 1E12-B001A-SL1-WA (600524532), unscheduled -B001D-SB2-WA and scheduled -B001D-SB3-WA due to dose concerns (600462810), revised the -WA's for the ADHR Mod ECP 04-0270 along with changes for C-F-2 welds including corrected size exemptions, removed C5.52 and revised descriptions for welds 1E12-0463, -0464, -0643 and -0644 and then revised Cat. C-H. (600462810)
22. Pg. 187 - Revised Sect. 4.0 - 4.2 to reflect 01E/03A ASME Item #'s, notes, code cases and verbiage for 3rd Interval.(600462810)
23. Pgs. 188-189 - Revised sect. 4.3 & 4.4 to align to 01E/03A ASME Section XI. (600462810)
24. Pgs. 189-191 - Revised Section 4.5 to include 3rd Interval Requests for Relief/Alternatives.
25. Pgs. 193-203 - Revised Section 4.6 Tables to reflect new 3rd Interval schedules and specifically; revising notes for inaccessible components and Cat. D-B. (600462810)
26. Pgs. 204-206 - Revised Sect. 5.0 - 5.2 to reflect 01E/03A ASME Item #'s, notes, code cases and verbiage for 3rd Interval.(600462810)
27. Pg. 206 - Revised Sect. 5.3 to align to 01E/03A ASME Section XI. (600462810)
28. Pgs. 207-208 - Revised the definitions in sect. 5.5 to align to NQI-1042.
29. Pgs. 210-211 - Revised Sect. 5.5 Tables to reflect new 3rd Interval schedules and the 10CFR50.55a limitations and modifications. (600462810)
30. Pg. 213 - Revised Note 1 in Sect. 6.0 & 6.1 to remove N-491 (600462810)
31. Pgs. 214-215 - Revised Sect. 6.2 & 6.3 to align to 01E/03A ASME Section XI. (600462810)
32. Pg. 215 - Removed the relief requests from Sect. 6.4 as they are no longer required.

SCOPE OF REVISION (Cont.):

33. Pgs. 217-285 - Revised Section 6.5 Tables to reflect new 3rd Interval schedules and specifically; revising the component supports that were added/revised/removed under the ADHR Mod ECP 04-0270. (600462810)
34. Pgs. 286-292 - Revised the Augmented Exam Sect. 7.0 to reflect commitment changes, BWRVIP doc changes and frequency changes required for the 3rd Interval along with the SHSAM Mod. (600369359)
35. Pgs. 296-324 - Revised Section 7.6 Tables to reflect new 3rd Interval schedules and include removal of Cat. X-D with archiving commitment B00553.
36. Pg. 325 - Revised Sect. 8.0 due to Snubbers now covered under ASM OM Code.
37. Pgs. 325-326 - Revised Sect. 9.0 - 9.4 to align to 01E/03A ASME Section XI. (600462810)
38. Pgs. 326-334 - Revised Sect. 9.5 to reflect the new Repair/Replacement Program, NOP-CC-5703 and remove PT-002.
39. Pg. 19 - Added section 1.11.8 due to code change, reference IWB-2412(b).
40. Pgs. 147 - 148 - Deleted category C-C items that are associated with supports that don't require examination.

INSERVICE EXAMINATION PLAN

1.0 INTRODUCTION

1.1 Purpose

This program plan provides methods of verification of the structural integrity of components subject to the examination requirements delineated in the ASME Boiler and Pressure Vessel Code, Section XI, Rules for Inservice Inspection.

1.2 Scope

The Inservice Examination Plan (ISEP) delineates the components subject to non-destructive testing during the third inspection interval at the Perry Nuclear Power Plant, Unit 1 (PNPP), which commenced on May 18, 2009 and expires on May 17, 2019. Components requiring examination are vessels, pumps, valves, piping systems and their supports. Of the components requiring exams, certain parts such as welds, bolting, core support structures, and interior surfaces may also require examination.

The ISEP is subject to change. In fact, the ISEP is a living document that must continually incorporate design changes, schedule changes, and implementation of Operating Experience reviews. Changes will be effected via Requests for Relief or revisions of this document that may be implemented during the inspection interval. Incorporation of design and scheduling changes can be "after-the-fact" changes to the ISEP provided they are incorporated prior to the next inspection cycle and, in the case of schedule changes, they meet Code and are approved by the Technical Service Engineering Manager. The ISEP will be updated every 10 years in accordance with 10CFR50.55a.

The Inservice Testing Program and the associated testing requirements for pumps, valves, and snubber functional tests are delineated in site administrative procedures and are not referenced within this document.

1.3 Compliance

The date for issuance of the low power operating license for PNPP Unit 1 was March 18, 1986. The facility operating license number is NPF-45. This license restricted the plant to power levels no greater than 5 percent full power or 178 megawatts thermal. As of November 13, 1986, the NRC issued a full power operating license for Unit 1. The facility's full power license number is NPF-58 with an expiration date of March 18, 2026.

PNPP Unit 1 began commercial operation on November 18, 1987. Therefore, PNPP's first inspection interval was initially scheduled to expire on November 17, 1997. In accordance with IWA-2400(c) of the 1983 Edition with Summer 83 Addenda (the Edition and Addenda applicable at that time),

PNPP's first interval was extended 12 months (6 months because RFO4 exceeded a 6 month duration and an additional 6 months for scheduling purposes) and expired on November 17, 1998.

PNPP's second inspection interval commenced on November 18, 1998 and the applicable code of record was ASME XI, 1989 Edition for all Subsections except IWE and IWL. For subsections IWE and IWL, the 1992 Edition with the 1992 Addenda applied. For Ultrasonic examinations, revisions to 10CFR50.55a published September 22, 1999 (Final Rule) required the implementation of the ASME Code, Section XI, Division 1, Appendix VIII, "Performance Demonstration for Ultrasonic Examination Systems", of the 1995 Edition with 1996 Addenda as modified by 10 CFR 50.55a(b)(2)(xiv, xv and xvi). Appendix VIII requires qualification of the procedures, personnel, and equipment used to detect and size flaws in piping, bolting and the reactor pressure vessel.

PNPP's second inspection interval was extended 6 months in accordance with IWA-2430(d) and expired on May 17, 2009.

PNPP's third inspection interval commenced on May 18, 2009. In accordance with 10CFR50.55a(g)(4)(ii), the inservice examination of components and system pressure tests shall be conducted during the successive 120-month inspection interval in compliance with the latest edition and addenda of the Code incorporated by reference in 10CFR50.55a(b)(2) twelve months prior to the start of the interval. The referenced code edition and addenda for the third interval is ASME XI, 2001 Edition through the 2003 Addenda.

In addition to the rules of ASME XI, 2001 Edition through the 2003 Addenda the following limitations and modifications are required by 10CFR50.55a(b)(2):

a. 10CFR50.55a(b)(2)(ix)(A)- For Class MC applications, the licensee shall evaluate the acceptability of inaccessible areas when conditions exist in accessible areas that could indicate the presence of or result in degradation to such inaccessible areas. For each inaccessible area identified, the licensee shall provide the following in the ISI Summary Report as required by IWA-6000:

1. A description of the type and estimated extent of degradation, and the conditions that led to the degradation;
2. An evaluation of each area, and the result of the evaluation, and;
3. A description of necessary corrective actions.

b. 10CFR50.55a(b)(2)(ix)(B)- When performing remotely the visual examinations required by Subsection IWE, the maximum direct examination distance specified in Table IWA-2210-1 may be extended and the minimum illumination requirements specified in Table IWA-2210-1 may be decreased provided that the conditions or indications for which the visual examination is performed can be detected at the chosen distance and illumination.

c. 10CFR50.55a(b)(2)(ix)(F)- VT-1 and VT-3 examinations must be conducted in accordance with IWA-2200. Personnel conducting examinations in accordance with the VT-1 or VT-3 examination method shall be qualified in accordance with IWA-2300. The "owner-defined" personnel qualification provisions in IWE-2330(a) for personnel that conduct VT-1 and VT-3 examinations are not approved for use.

d. 10CFR50.55a(b)(2)(ix)(G)- The VT-3 examination method must be used to conduct the examinations in Items E1.12 and E1.20 of Table IWE-2500-1, and the VT-1 examination method must be used to conduct the examination in Item E4.11 of Table IWE-2500-1. An examination of the pressure-retaining bolted connections in Item E1.11 of Table IWE-2500-1 using the VT-3 examination method must be conducted once each interval. The "owner-defined" visual examination provisions in IWE-2310(a) are not approved for use for VT-1 and VT-3 examinations.

e. 10CFR50.55a(b)(2)(ix)(H)- Containment bolted connections that are disassembled during the scheduled performance of the examinations in Item E1.11 of Table IWE-2500-1 must be examined using the VT-3 examination method. Flaws or degradation identified during the performance of a VT-3 examination must be examined in accordance with the VT-1 examination method. The criteria in the material specification or IWB-3517.1 must be used to evaluate containment bolting flaws or degradation. As an alternative to performing VT-3 examinations of containment bolted connections that are disassembled during the scheduled performance of Item E1.11, VT-3 examinations of containment bolted connections may be conducted whenever containment bolted connections are disassembled for any reason.

f. 10CFR50.55a(b)(2)(ix)(I)- The ultrasonic examination acceptance standard specified in IWE-3511.3 for Class MC pressure-retaining components must also be applied to metallic liners of Class CC pressure-retaining components.

g. 10CFR50.55a(b)(2)(XXII)- The use of the provision in IWA-2220, "Surface Examination," of Section XI, 2001 Edition through the 2003 Addenda that allow use of an ultrasonic examination method is prohibited.

h. 10CFR50.55a(b)(2)(xxiv)- The use of Appendix VIII and the supplements to Appendix VIII and Article I-3000 of Section XI of the ASME BPV Code, 2002 Addenda through the latest edition and addenda incorporated by reference in paragraph (b)(2) of this section, is prohibited. PNPP's ISI Program will follow the ASME Section XI 2001 Edition, no addenda for Appendix VIII (including supplements) UT examinations as modified by 10CFR50.55a(b)(2)(xiv, xv, and xvi).

The ISEP complies with the requirements of the ASME Section XI Editions and Addenda as stated above, hereinafter referred to as Section XI.

Modifications to Section XI requirements include, but are not limited to the following:

a. Code Case N-457, "Qualification Specimen Notch Location for Ultrasonic Examination of Bolts and Studs, Section XI, Division 1"
b. Code Case N-460, "Alternative Examination Coverage for Class 1 and Class 2 Welds, Section XI, Division 1"
c. Code Case N-461-1, "Alternate Rules for Piping Calibration Block Thickness, Section XI, Division 1"
d. Code Case N-513-2, "Evaluation Criteria for Temporary Acceptance of Flaws in Moderate Energy Class 2 or 3 Piping, Section XI, Division 1"
e. Code Case N-526, "Alternative Requirements for Successive Inspections of Class 1 and 2 Vessels, Section XI, Division 1"
f. Code Case N-528-1, "Purchase, Exchange, or Transfer of Material Between Nuclear Plant Sites, Section XI, Division 1" [1]
g. Code Case N-532-4, "Alternative Requirements to Repair and Replacement Documentation Requirements and Inservice Summary Report Preparation and Submission as Required by IWA-4000 and IWA-6000, Section XI, Division 1"
h. Code Case N-552, "Alternative Methods - Qualification for Nozzle Inside Radius Section from the Outside Surface, Section XI, Division 1" [1]
i. Code Case N-566-2, "Corrective Action for Leakage Identified at Bolted Connections, Section XI, Division 1"
j. Code Case N-578, "Risk-Informed Requirements for Class 1, 2, and 3 Piping, Method B, Section XI, Division 1"
k. Code Case N-586-1, "Alternative Additional Examination Requirements for Class 1, 2, and 3 Piping, Components and Supports, Section XI, Division 1"
l. Code Case N-599, "Alternative to Qualification of Nondestructive Examination Personnel for Inservice Inspection of Metal (Class MC) and Concrete (Class CC) Containments, Section XI, Division 1" [1]
m. Code Case N-613-1, Ultrasonic Examination of Full Penetration Nozzles in Vessels, Examination Category B-D, Item No's. B3.10 and B3.90, Reactor Nozzle-to-Vessel Welds, Figs. IWB-2500-7(a), (b), and (c), Section XI, Division 1"
n. Code Case N-624, "Successive Inspections, Section XI, Division 1"
o. Code Case N-648-1, "Alternative Requirements for Inner Radius Examinations of Class 1 Reactor Vessel Nozzles, Section XI, Division 1" [1]
p. Code Case N-652-1, "Alternative Requirements to Categories B-G-1, B-G-2, and C-D Bolting Examination Methods and Selection Criteria, Section XI, Division 1"
q. Code Case N-658, "Qualification Requirements for Ultrasonic Examination of Wrought Austenitic Piping Welds, Section XI, Division 1"
r. Code Case N-663, "Alternative Requirements for Classes 1 and 2 Surface Examinations, Section XI, Division 1"
s. Code Case N-664, "Performance Demonstration Requirements for Examination of Unclad Reactor Pressure Vessel Welds, Excluding Flange Welds, Section XI, Division 1"

t. Code Case N-683, "Method for Determining Maximum Allowable False Calls When Performing Single-Sided Access Performance Demonstration in Accordance With, Appendix VIII, Supplements 4 and 6, Section XI, Division 1"
u. Code Case N-685, Lighting Requirements for Surface Examination, Section XI, Division 1
v. Code Case N-686, "Alternative Requirements for Visual Examinations, VT-1, VT-2, and VT-3, Section XI, Division 1"
w. Code Case N-695, "Qualification Requirements for Dissimilar Metal Piping Welds, Section XI, Division 1"
x. Code Case N-700, "Alternative Rules for Selection of Classes 1, 2, and 3 Vessel Welded Attachments for Examination, Section XI, Division 1"
y. Applicable NUREG's and Regulatory Guides as addressed in Section 1.8 of the USAR, including NUREG-0313 and NUREG-0619.
z. Requests for Relief from Examination granted by the USNRC.

[1] Use of this Case is subject to the conditions within RG 1.147.

The Augmented section of the ISEP complies, to the extent determined during the Operational Experience Review (OER) process or committed to the regulatory authorities, with the requirements of the following[1]:

a. Generic Letter 88-01, NRC Position on Intergranular Stress Corrosion Cracking (IGSCC) in BWR Austenitic Stainless Steel Piping as modified by BWRVIP-75-A for the Category C & E inspection frequencies.
b. Generic Letter 94-03, Intergranular Stress Corrosion Cracking of Core Shrouds in Boiling Water Reactors
c. NUREG-0313, Rev 2, Technical Report on Material Selection and Possessing Guidelines for BWR Coolant Pressure Boundary Piping
d. NUREG-0619, Rev 1, BWR Feedwater Nozzle and Control Rod Drive Return Line Nozzle Cracking
e. IEB 80-07, BWR Jet Pump Assembly Failure
f. IEB 80-13, Cracking in Core Spray Spargers
g. IEN 86-19, Reactor Cooling Pump Shaft Failure at Crystal River
h. IEN 93-101, Jet Pump Hold-Down Beam Failure
i. IN 97-02, Cracks found in Jet Pump Riser Assembly Elbows at Boiling Water Reactors
j. BWRVIP-03, RPV Internals Examination
k. BWRVIP-18, Core Spray Internals Inspection and Flaw Evaluation Guidelines
l. BWRVIP-26-A, Top Guide Inspection of Flaw Evaluation Guidelines
m. BWRVIP-38, Shroud Support Inspection and Flaw Evaluation Guidelines
n. BWRVIP-41, BWR Jet Pump Assembly Inspection and Flaw Evaluation Guidelines
o. BWRVIP-42-A, BWR LPCI Coupling Inspection and Flaw Evaluation Guidelines
p. BWRVIP-47-A, BWR Lower Plenum Inspection and Flaw Evaluation Guidelines
q. BWRVIP-48-A, Vessel ID Attachment Weld Inspection and Flaw Evaluation Guidelines
r. BWRVIP-75-A, Technical Basis for Revisions to Generic Letter 88-01 Inspection Schedules

s. BWRVIP-76-A, BWR Core Shroud Inspection and Evaluation Guidelines
t. BWRVIP-104, Evaluation and Recommendations to Address Shroud Support Cracking in BWRs
u. BWRVIP-139-A, BWR Steam Dryer Inspection and Flaw Evaluation Guidelines
v. BWRVIP-180, Access Hole Cover Inspection and Evaluation Guidelines
w. BWRVIP-183, Top Guide Grid Beam Inspection and Evaluation Guidelines
x. BWRVIP-200, Implementation Plan for Two-sided Inspection of BWR Shroud Welds
y. RICSIL-65, Jet Pump Beam Cracking
z. RICSIL-73, Cracking in Incore Dry Tubes
aa. RICSIL-78, Jet Pump Restrainer Bracket Set Screw Gaps
bb. SIL 289-1, Cracking in Core Spray Piping
cc. SIL 330-2, GE BWR6 Jet Pump Inlet Mixer Ejection
dd. SIL 409-2, Incore Dry Tube C
ee. SIL 420, Inspection of Jet Pump Sensing Lines
ff. SIL 455-2, ISI of Additional Alloy 182 Welds
gg. SIL 462, Shroud Support Access Hole Cover Cracks
hh. SIL 465, Jet Pump Mixer Unusual Surface Observation
ii. SIL 474, Steam Dryer Drain Channel Cracking
jj. SIL 551, Jet Pump Riser Brace Cracking
kk. SIL 571, Instrument Nozzle Safe-End Cracks
ll. SIL 572-1, Core Shroud Cracks
mm. SIL 574, Jet Pump Adjusting Screw Tack Weld Failures
nn. SIL 605-1, Jet Pump Riser Pipe Cracking
oo. SIL 644, Supplement 1, BWR Steam Dryer Integrity
pp. SIL 650, BWR/6 Shroud Head Stud Assembly Modification Wear
qq. SIL 658, Feedwater Sparger End Bracket Degradation
rr. USAR 3.9.5.3.7, Special Requirements for Jet Pump Hold-down Beams
ss. USAR 5.2.4.9, Augmented Inservice Inspection for High Energy Piping Systems in Containment Penetration Break Exclusion Region
tt. USAR 5.3.1.5, RPV Materials Fracture Toughness

[1] Note where augmented requirements of the above referenced IEBs, IENs, SILs, or RICSILs apply to components that are now covered by Boiling Water Reactor Vessel and Internals Project (BWRVIP) Program Inspection and Evaluation Guidelines, the requirements of those documents are considered to be met/superseded by the applicable BWRVIP guidelines.

1.4 Glossary

1.4.1 Authorized Nuclear Inservice Inspector (ANII)

A person who is employed and has been qualified by an Authorized Inspection Agency to verify that examinations, tests, and repairs (that do not include welding or brazing) are performed in accordance with the rules and requirements of ASME Section XI.

1.4.2 Authorized Nuclear Inspector (ANI)

An employee of an Authorized inspection agency who has been qualified in accordance with NCA-5000 of Section III.

1.4.3 Component

An item in a nuclear power such as vessel, pump, valve, or piping system.

1.4.4 Component Standard Support

A support consisting of one or more generally mass-produced units usually referred to as catalog items.

1.4.5 Component Support

A metal support designed to transmit loads from a component to the load-carrying building or foundation structure. Component supports include piping supports and encompass those structural elements relied upon to either support the weight or provide structural stability to components.

1.4.6 Defect

A flaw (imperfection or unintentional discontinuity) of such size, shape, orientation, location, or properties as to be rejectable.

1.4.7 Discontinuity

A lack of continuity or cohesion; an interruption in the normal physical structure of material or a product.

1.4.8 Examination

Denotes the performance of visual observations and nondestructive testing, such as radiography, ultrasonic, eddy current, liquid penetrant, and magnetic particle methods.

1.4.9 Flaw

An imperfection or unintentional discontinuity that is detectable by nondestructive examination.

1.4.10 Form NIS-1

Owner's Report for Inservice Inspection. It is the certification for Class 1 and Class 2 refueling outage examination results. This form becomes the cover page for the submittal of the ISI Summary Report.

1.4.11 Form NIS-2/NR-1

Owner's Report for Repair/Replacement Activity; it is the certification for proper completion of activities associated with the Repair/Replacement Plan. This form becomes part of the ISI Summary Report.

1.4.12 Imperfection

A condition of being imperfect; a departure of a quality characteristic from its intended condition.

1.4.13 Indication

The response or evidence from the application of a nondestructive examination.

1.4.14 Inservice Examination

The process of visual, surface, or volumetric examination performed in accordance with the requirements of Section XI.

1.4.15 Inservice Examination Summary Report

The report that is prepared at the completion of each refueling outage as specified within ASME Code, Section XI, IWA-6200. This report is to be filed with the enforcement and regulatory authorities within 90 days upon returning to commercial operation (completion of the refueling outage).

1.4.16 Inservice Inspection

Methods and actions for assuring the structural and pressure-retaining integrity of safety-related nuclear power plant components in accordance with Section XI.

1.4.17 Inservice Test

A test to determine the operational readiness of a component or system.

1.4.18 Inspection

Verification of the performance of examinations and tests by an Inspector.

1.4.19 Inspection Program

The plan and schedule for performing inservice examinations or tests.

1.4.20 Nondestructive Examination

An examination by the visual, surface, or volumetric method.

1.4.21 Preservice Examination

Examinations performed on components and component parts to establish initial (baseline) data to assure their structural and pressure retaining integrity and aid in future examination evaluations.

1.4.22 Relevant Condition

A condition observed during a visual examination that requires supplemental examination, corrective measure, correction by repair/replacement, or analytical evaluation.

1.4.23 Structural Integrity

The capability of a given component or structure to perform its design function (e.g., pressure retention, support of component weight or restriction of motion). Structural integrity is not related to operability of components being tested.

1.5 System/Component Classifications

In order to apply the rules and requirements of Section XI, the systems and components throughout the plant are classified by combining their safety and quality group classifications and applying the guidelines of 10CFR50.2, Regulatory Guide 1.26 and NUREG-0800.

1.5.1 Class 1

The rules of Section XI Article IWB apply to components whose systems are Class 1.

This classification applies to Safety Class 1 and Quality Group A systems located within the reactor coolant pressure boundary and core support structure and whose failure could result in a loss of reactor coolant.

1.5.2 Class 2

The rules of Section XI Article IWC apply to components whose systems are Class 2.

This classification applies to Safety Class 2 and Quality Group B structures, systems and components, other than cooling water systems, that are not safety Class 1 but are necessary to accomplish the following functions:

1. Insert negative reactivity to shutdown the reactor.

2. Prevent rapid insertion of positive reactivity.

3. Maintain core geometry appropriate to all plant process conditions.

4. Provide emergency core cooling.

5. Provide and maintain containment integrity.

6. Remove residual heat from the reactor.

7. Store spent fuel.

NOTE: Piping connections having a NPS 3/4 inch or smaller, that are part of the reactor coolant pressure boundary, are also Class 2.

1.5.3 Class 3

The rules of Section XI Article IWD apply to components whose systems are Class 3.

This classification applies to Safety Class 3 and Quality Group C systems and components which contain water, steam, and radioactive waste, and are not Class 1 or Class 2, but accomplish the following functions:

1. Process radioactive waste whose failure would result in release to the environment of gas, liquid, or solids resulting in a single dose greater than the limits specified in 10CFR100.

2. Provide or support any safety system function.

3. Remove decay heat from spent fuel.

1.5.4 Class MC and CC

The rules of Section XI Articles IWE and IWL apply to components that are Class MC and CC respectively.

This classification applies to safety-related metal and concrete containment structures.

1.5.5 Component Supports

The rules of Section XI Article IWF, apply to components supports whose systems are Class 1, 2, 3, MC or Augmented.

1.5.6 Augmented

Augmented items are those items that are subject to examination requirements as a result of Perry commitments to various documents (e.g., NUREG's, Regulatory Guides, SIL's, BWRVIP I&E Guidelines, etc.). Augmented items may or may not have an ISI Safety Class/Code classification.

1.6 Examination Methods

1.6.1 Basic Examination Methods

Perry will employ three basic types of examinations for inservice examination purposes. They are visual, surface and volumetric. The specific examination method to be used is listed within each inservice examination table.

Where surface preparation is required, a mechanical method may be employed. Such surfaces shall be prepared by removing loose scale and debris and any other foreign item that may mask indications. Care will be taken so as not to reduce the wall thickness during this process.

1.6.2 Visual Examinations, VT-1

This method is used to detect discontinuities and imperfections on the surface of components, including such conditions as cracks, wear, corrosion, or erosion. Reference Code Case N-686 for additional guidance in performing VT-1 examinations.

The VT-1 examination method can be performed directly when access is sufficient to place the eye within 24 inches and at an angle not less than 30 degrees to the surface. Mirrors can be used to supplement angle of vision. Remote visual examinations using optical aids, binoculars or cameras may be substituted for direct examination provided that the visual acuity requirements of the VT-1 method are met (i.e., able to resolve the VT-1 letters, 0.044 inch characters, on the visual acuity card).

1.6.3 Visual Examination, EVT-1

An enhanced VT-1 examination method capable of resolving the ASME Code Section XI VT-1 0.044 inch characters that is used in the performance of augmented remote in-vessel examinations. The camera motion (speed) shall not exceed 0.5 inch/second and the camera angle to not exceed 30 degrees from perpendicular to the surface during the examination. An evaluation of the need for pre-cleaning is required and pre-cleaning is typically performed.

1.6.4 Visual Examination, VT-2

This method is used to locate and quantify leakage from pressure retaining components with or without leakage collection systems, as required during the conduct of system pressure tests.

1.6.5 Visual Examination, VT-3

This method is used to determine the general mechanical and structural condition of components and their supports, by verifying parameters such as clearances, settings, physical displacements; and to detect discontinuities and imperfections, such as loss of integrity at bolted or welded connections, loose or missing parts, debris, corrosion, wear, or erosion; and to detect conditions that could affect operability or functional adequacy of snubbers, and constant load and spring type supports. Reference Code Case N-686 for additional guidance in performing VT-3 examinations.

For component supports and component interiors, the visual examination may be performed remotely with or without optical aids to verify the structural integrity of the component provided that the visual acuity requirements of the VT-3 method are met (i.e., able to resolve the VT-3 letters, 0.105 inch characters, on the visual acuity card).

1.6.6 Visual Examination, VT-1C

Visual examinations that are conducted to determine the concrete deterioration and distress for suspect areas detected by VT-3C, and conditions (e.g., cracks, wear, or corrosion) of tendon anchorage and wires or strands. Minimum illumination, maximum direct examination distance, and maximum procedure demonstration character height shall be as specified for VT-1 visual examination in IWA-2210. Refer to NOP-CC-5708 for further definition of this visual examination method.

1.6.7 Visual Examination, VT-3C

Visual examinations that are conducted to determine the general structural condition of concrete surfaces of containments by identifying areas of concrete deterioration and distress, such as identified in ACI 201.1 R-68 and ACI 349.3R. The minimum illumination, maximum direct examination distance, and maximum procedure demonstration character height shall be as specified for VT-3 visual examination in IWA-2210. Refer to NOP-CC-5708 for further definition of this visual examination method.

1.6.8 Surface Examination

A surface examination is conducted to determine the presence of surface cracks or discontinuities in a component.

It may be conducted by either magnetic particle or liquid penetrant methods in accordance with Articles 7 and 6 of Section V respectively. These two methods can be inter-changeable where applicable. Unconditionally approved Code Case N-685 provides alternate lighting requirements during surface exams.

1.6.9 Volumetric Examination

A volumetric examination is used to determine the presence of discontinuities throughout the volume of material and may be conducted from the inside or the outside surface of a component. The examination methods used can be radiography in accordance with Article 2 of Section V or ultrasonic in accordance with IWA-2232 of Section XI. Additionally, performance of ultrasonic examinations shall comply with ASME XI, Appendix VIII as detailed in 1.3 above.

In addition to the basic Section XI ultrasonic examination, welds which fall under the scope of GL 88-01, other than corrosion resistant clad (CRC) welds, shall be examined using detailed procedures, techniques, and equipment shall be qualified through the EPRI Performance Demonstration Initiative (which supersedes the old BWROG/EPRI/NRC Coordination Plan). CRC welds will be examined by an augmented technique developed specifically for their unique weld configuration. CEI Commitment: L01551.

1.6.10 Alternate Examination

In accordance with 10CFR50.55a(b)(2)(xix), alternate examination methods, a combination of methods, or newly developed techniques may be substituted for the methods specified in Section XI following the provisions of the 1997 Addenda provided the ANII is satisfied that the results are demonstrated to be equivalent or superior to the specified method.

The provisions in IWA-2240, 1998 Edition through the 2001 Edition through the 2003, are not approved for use. The provisions in IWA-4520(c), 1997 Addenda through the 2001 Edition through the 2003, allowing the substitution of alternative examination methods, a combination of methods, or newly developed techniques for the methods specified in the Construction Code are not approved for use.

1.7 Instructions and Procedures

Implementation of inservice examinations requires two types of procedures. The implementing procedure is an instruction labeled as an Inservice Inspection Instruction (ISI). The performance procedure is a nondestructive examination (NDE) for the specific method.

1.7.1 Inservice Inspection Instructions

This instruction permits tracking, scheduling, and documenting the performance of examinations. Instructions are not used to perform work or change plant equipment operating status. The instructions will be used to route (by Attachment) the refueling outage examination plans and the Inservice Inspection Summary Report for proper documentation storage.

1.7.2 Non-Destructive Examinations (NDE)

NDE procedures are issued to perform a specific NDE method using a defined technique. These procedures shall not perform work or effect plant equipment status. NDE procedures must meet the Code of record and be acceptable to the FENOC Level III Examiner and Authorized Nuclear Inservice Inspector (ANII). Code Cases N-460, N-658, N-683, N-685 and N-686 may be incorporated into the appropriate procedures. Additionally, ultrasonic examination procedures shall comply with ASME XI, Appendix VIII as specified in ASME XI, Appendix I. Reactor Vessel head-to-flange and shell-to-flange welds, do not require Appendix VIII exams. Alternatively, they can be examined with Appendix VIII procedures in accordance with IWA-2240.

Appropriate vendor NDE procedures are reviewed and approved as Perry procedures in accordance with NOP-CC-5709 prior to utilization on site. Vendor procedures should be of a temporary nature and be in effect for the duration of the refueling outage.

1.8 Personnel Qualifications

Personnel performing nondestructive examinations shall be qualified and certified in accordance with IWA-2300 of ASME XI using NOP-CC-5708 or an approved vendor's program and then accepted by Perry in accordance with NOP-CC-5709.

Furthermore, ultrasonic examination personnel will comply with ASME XI, Appendix VIII as detailed in 1.3 above. In addition, personnel performing ultrasonic examinations on welds which fall under the scope of GL 88-01 shall be qualified through the EPRI Performance Demonstration Initiative with an IGSCC endorsement (which supersedes the old BWROG/EPRI/NRC Coordination Plan). Commitment: L01551.

1.9 Evaluation Criteria (Characterization Process and Disposition)

Indications detected during inservice examinations will be evaluated by applying the rules of Section XI.

1.9.1 Evaluation

Acceptance standards for a particular component, Examination Category, or examination method not specified in Section XI, shall be evaluated per the acceptance standards specified in the Section III edition applicable to the construction of the component to determine disposition. Such disposition will be subject to review by the enforcement authority at the site.

All observed or calculated dimension values of a component thickness and of flaws detected by nondestructive examinations shall be compared to the evaluation standard listed in Section XI.

1.9.2 Flaw Characterization

Flaws detected by the performance of nondestructive examinations shall be sized by the bounding rectangle or square for the purpose of description and dimensioning.

1. The length 'l' of the rectangle or one side of the square shall be drawn parallel to the inside pressure retaining surface of the component.

2. The depth of the rectangle or one side of the square shall be drawn normal to the inside pressure retaining surface of the component and shall be denoted as 'a' for a surface flaw and '2a' for a subsurface flaw.

3. The aspect ratio of a flaw is defined by a/l. The flaw aspect ratio should not exceed 0.5.

A listing of flaw characterizations as provided in Section XI are as follows:

1. Surface Planar Flaws

2. Subsurface Planar Flaws

3. Multiple Planar Flaws

4. Nonplanar Flaws

5. Parallel Planar Flaws

6. Laminar Flaws

7. Linear Flaws (Detected by surface or volumetric examinations)

8. Multiple Nonaligned Coplanar Flaws

9. Multiple Aligned Separate Flaws

For concrete examinations, flaws are characterized in accordance with ACI 201.1 R-92 as cracks, deterioration, abrasion damage, cavitation damage, deformation, joint spall, pop-out, scaling, bug holes, cold joint and honey comb. ACI 349.3R, "Evaluation of Existing Nuclear Safety-Related Concrete Structures", should also be used in evaluating flaws per IWL-2510.

1.9.3 Indication Characterization Process

The indication characterization process includes identification, evaluation and disposition.

Indications are identified by the application of a nondestructive examination. These indications may be a result of a discontinuity within a component. Recordable indications identified during the course of a nondestructive examination shall be evaluated by an NDE Level III in the discipline which revealed the initial indication.

Indications identified as an imperfection or unintentional discontinuities are classified as flaws.

Flaws are also characterized to determine their geometry. Preservice and construction examination results should be utilized, as applicable, in the determination of the flaw's geometrical characteristics.

The geometrical characteristics of the flaw shall be compared to the Section XI acceptance standards.

Flaws equal to or less than the standards are acceptable with no further action required. Flaws greater than the standards are considered as defects and must undergo further evaluation and disposition.

Defect evaluation and disposition processes are controlled by the issuance of a condition report against the defective component.

1.9.4 Defect Disposition

Rejectable Flaws

Defects are flaw indications whose characteristics are such that they are rejectable in accordance with the acceptance standards listed in Section XI. A rejectable flaw places the item's structural or pressure retaining integrity in question. Appropriate actions must be initiated to ensure the safe operation of the plant.

1.9.5 Condition Reports

Defects shall be tracked and resolved by generating a Condition Report against the component with the defect. A Condition Report initiates the appropriate action through Perry Operations Section for evaluation of technical specifications (i.e., Tech Spec 5.5.6 and Operational Requirements Manual 6.3.2.1) for LCO applicability. Condition Reports issued against defects are routed to the Design Engineering Section (DES) for disposition. DES shall determine if the defect is "acceptable for continued service" (i.e., utilizing analytical/fracture mechanics evaluation techniques per IWB-3600) or rejectable and disposition in accordance with Condition Report Process procedure, NOP-LP-2001.

1.9.6 Use As Is

Defects considered acceptable shall be labeled as "Acceptable for Continued Service" and monitored by scheduling successive examinations (in accordance with IWB/IWC/IWD/IWE/IWF-2420) for monitoring further growth or degradation.

1.9.7 Rejectable Defects

Rejectable defects shall be repaired, replaced or removed following the requirements of the Repair/Replacement Program (NOP-CC-5703). A repair/replacement PSI shall be performed on the affected area which includes the examination method that originally detected the defect.

1.10 Repair/Replacement

Repair/Replacement activities as required by Section XI, IWA-4000 are associated with pressure retaining components and their supports, including appurtenances, subassemblies, parts of a component, core support structures, metal containments and their integral attachments, and metallic portions of Class CC containments and their integral attachments. The Perry Repair/Replacement Program is documented in NOP-CC-5703.

Repair/replacements may include welding, brazing, defect removal, metal removal by thermal means, rerating, and removing, adding, and modifying items or systems. These requirements are applicable to procurement, design, installation, examination, and pressure testing of items within the scope of Section XI.

1.10.1 Applicability

Following the requirements of IWA-4120(b), items such as valve operators, component support items such as gaskets/bushings/valve packing and items that are not classified as having a pressure-retaining function are exempt from the repair/replacement activities. The full list of exemptions are listed in IWA-4120(b)(1) through (6).

Alternative requirements for repair/replacement activities are captured under IWA-4130, including applicability for items rotated from stock. Additional guidance is contained in NOP-CC-5703, Section 4.2.

1.10.2 Repair/Replacement Plan

In accordance with IWA-4150, a repair/replacement plan shall be developed and include the essential requirements for completion of the repair/replacement activities. The plan is documented on NOP-CC-5703-01 and follows the guidance in NOP-CC-5703, Section 4.4.

1.10.3 Examination and Testing

Prior to returning the component to service, the pre-service examination and system pressure testing requirements identified in the repair/replacement plan (NOP-CC-5703-01) shall be completed following the guidance in IWA-4500.

1.11 Scheduling Criteria

1.11.1 Categories

Numerous components are subject to examination and testing during the inspection interval. The methods of examination for components and parts of pressure retaining boundaries comply with the requirements delineated in Section XI. Section XI uses categories to determine the examination requirements for each component. Each category is subdivided into item numbers for ease in determining the extent of examination. Class 1, 2, 3, MC, CC, and component supports are listed for examination in accordance with their proper examination category. Components and supports identified as "AUGMENTED" within this document are listed for examination in accordance with their specific commitments and are generally identified with an item number such as X1.10, X2.10, X3.10, etc.

1.11.2 Inspection Plans and Schedules

The initial inspection plan is prepared to address systems and components subject to examination during the inspection interval. The inspection plan lists an implementation schedule based on percentage requirements delineated in ASME Section XI.

The Unit 1 inspection program and schedule for systems, components and supports follow the requirements of ASME Section XI, Inspection Program B.

Inspection Program B permits each inspection interval to be extended or decreased by as much as 1 year in accordance with IWA-2430(d). Adjustments shall not cause successive intervals to be altered by more than 1 year from the original pattern of intervals. Additionally, for power units that are out of service continuously for 6 months or more, the inspection interval may be extended for a period equivalent to the outage and the original pattern of intervals extended accordingly for successive intervals. PNPP utilized both of these provisions to extend the first inspection interval 12 months (6 months for the 1st provision and 6 months for RFO4) as well as the second interval (6 months to align the end of the interval with Refueling Outage 12).

1.11.3 Components Subject to Examination

Components identified within this document are subject to the examination requirements delineated in ASME Section XI.

These components include items classified as ASME Class 1, 2, 3 MC and CC; such as vessels, piping systems, pumps, valves, and core support structures and storage tanks, including their respective supports. The selection of components for the ISEP is subject to review by the regulatory (NRC) and enforcement authorities (State of Ohio).

The Inservice Examination Program utilizes manually and computer generated refueling outage plans to identify components requiring examination during each specific outage. These items are selected by the ISI Program Owner or alternate and approved by the Technical Services Engineering Section Manager.

1.11.4 Code Requirements

Scheduling examinations for the Inservice Examination Plan is based upon the percentage requirements of ASME Section XI.

1.11.5 Inspection Intervals

The duration of each inspection interval is 10 years or 120 months. The inspection interval is divided into three periods. The inspection periods are used for determination of component examination percentage criteria.

1.11.6 Outages

The examinations are scheduled to coincide with the plant's refueling outages, including pre-outage work. Refueling outages are scheduled to occur at the end of each fuel cycle with future fuel cycles scheduled for a 24-month frequency. A grace period of plus or minus one year is permitted by ASME Section XI so that the inservice examinations can correspond with refueling outages.

Within the third inspection interval, RFO13 and RFO14 are in the 1st period, RFO15 and RFO16 are in the 2nd period, and RFO17 is in the 3rd period. The ISEP divides the examination schedule into outage plans by examination period in order to calculate percentages and meet Program B requirements.

1.11.7 Percentages

With the exception of the examinations that may be deferred until the end of the inspection interval, the required examinations will be completed during the inspection interval in accordance with the percentage table listed below:

Calendar Months of Current Interval	Minimum Examinations Completed, Percentage	Maximum Examinations Credited, Percentage
0-36	16	50
37-84	50[1]	75
85-120	100	100

NOTE 1: If the first period completion percentage for any examination category exceeds 34%, at least 16% of the required examinations shall be performed in the second period.

1.11.8 Adding Items or Welds to the Inspection Program to an Inservice Plant (Reference IWB-2412(b))

When items or welds are added during the 1st period of an interval, at least 25% of the exams required by the applicable Examination Category and Item Number for the added items or welds shall be performed during each of the 2nd and 3rd periods of that interval.

Alternatively for Class 1 and IWE exams only, if deferral of the exam is permitted by the applicable Examination Category and Item Number, the 2nd period exams may be deferred to the third period and at least 50% of the exams required by the applicable Examination Category and Item Number for the added items or welds shall be performed during the 3rd period.

When items or welds are added during the 2nd period of an interval, at least 25% of the exams required by the applicable Examination Category and Item Number for the added items or welds shall be performed during the 3rd period of that interval.

When items or welds are added during the 3rd period of an interval, exams shall be scheduled in accordance with IWB/C/D/E-2412(a) or IWF-2410(b) for successive intervals.

1.12 Reporting (ISI Summary Reports and Relief Requests)

1.12.1 ISI Summary Report

Within 90 days of the return to commercial operation following a refueling outage, a summary report for Class 1 and 2 pressure retaining components and their supports shall be filed with the enforcement and regulatory authorities.

The ISI summary report consists of the NIS-1 Form, supplemental listing of refueling outage examinations performed, and applicable NIS-2/NR-1 Forms.

1.12.2 Relief Requests

Where compliance to ASME Section XI, including Code Case N-460, is not practical, PNPP submits a formal application to the Nuclear Regulatory Commission requesting alternative or relief pursuant to the following:

- Authorize a licensee-proposed alternative in accordance with 10 CFR 50.55a(a)(3)(i) if it is determined that the alternative provides an acceptable level of quality and safety.
- Or authorize a licensee-proposed alternative in accordance with 10 CFR 50.55a(a)(3)(ii) if it is determined that complying with the specified requirement would result in hardship or unusual difficulty without a compensating increase in the level of quality and safety.
- Or grant relief and impose alternative requirements (if necessary) in accordance with 10 CFR 50.55a(g)(6)(i) for in-service inspection items if it is determined that the code requirement is impractical.
- Or approve using later code editions and addenda in accordance with 10 CFR 50.55a(g)(4)(iv) subject to the limitations and modifications listed in 10 CFR 50.55a(b).

2.0 IWB (CLASS 1) EXAMINATIONS

Class 1 examination categories are identifiable by a 'B' as the first assigned letter and are as follows:

Examination Category	Examination Item No.[1] - Area (Examination Method)
B-A	Pressure Retaining Welds in Reactor Vessels:
	B1.11 - Circumferential shell welds (Volumetric)
	B1.12 - Longitudinal shell welds (Volumetric)
	B1.21 - Circumferential head welds (Volumetric)
	B1.22 - Meridional shell welds (Volumetric)
	B1.30 - Shell-to-flange weld (Volumetric)
	B1.40 - Head-to-flange weld (Surface & Volumetric)
B-B	Pressure Retaining Welds in Vessels other than Reactor Vessels (NOT APPLICABLE TO PNPP)
B-D[3]	Full Penetration Welded Nozzles in Vessels:
	B3.90 - Nozzle-to-Vessel Welds (Volumetric)
	B3.100 - Nozzle Inner Radius Section (Volumetric or VT-1[4])
B-F	Pressure Retaining Dissimilar Metal Welds in Vessel Nozzles:
	See Category R-A[2]
B-G-1[5]	Pressure Retaining Bolting Greater Than 2 Inches in Diameter:
	B6.10 - Reactor Vessel Closure Head Nuts (VT-1)
	B6.20 - Reactor Vessel Closure Head Studs, in place (Volumetric)
	B6.40 - Reactor Vessel Threads in Flange (Volumetric)
	B6.50 - Reactor Vessel Closure Washers, Bushings (VT-1)
	B6.180 - Pump Bolts and Studs (Volumetric)
	B6.190 - Pump Flange Surface, when disassembled (VT-1)
	B6.200 - Pump Nuts, Bushings and Washers (VT-1)
	B6.210 - Valve Bolts and Studs (Volumetric)
	B6.220 - Valve Flange Surface, when disassembled (VT-1)
	B6.230 - Valve Nuts, Bushings and Washers (VT-1)
B-G-2[5]	Pressure Retaining Bolting 2 Inches and Less in Diameter:
	B7.10 - Reactor Vessel Bolts, Studs and Nuts (VT-1)
	B7.50 - Piping Bolts, Studs and Nuts (VT-1)
	B7.60 - Pump Bolts, Studs and Nuts (VT-1)
	B7.70 - Valve Bolts, Studs and Nuts (VT-1)

Examination Category	Examination Item No.[1] - Area (Examination Method)
B-J	Pressure Retaining Welds in Piping: See Category R-A[2]
B-K	Integral Attachments for Piping, Pumps and Valves: B10.10 - Pressure Vessels Integrally Welded Attachments (Surface) B10.20 - Piping Integrally Welded Attachments (Surface) B10.30 - Pumps Integrally Welded Attachments (Surface)
B-L-1	Pressure Retaining Welds in Pump Casings (NOT APPLICABLE TO PNPP)
B-L-2[6]	Pump Casings: B12.20 - Pump Casing (VT-3)
B-M-1	Pressure Retaining Welds in Valve Bodies: B12.30 - Valve Body Welds in valves less than NPS 4 (Surface) B12.40 - Valve Body Welds in valves less NPS 4 or larger (Volumetric)
B-M-2[6]	Valve Bodies: B12.50 - Valve Bodies exceeding NPS 4 (VT-3)
B-N-1	Interior of Reactor Vessel: B13.10 - Vessel Interior (VT-3)
B-N-2	Integral Welded Core Support Structures and Interior Attachments to Reactor Vessels: B13.20 - Interior Attachments within the Beltline Region (VT-1) B13.30 - Interior Attachments beyond the Beltline Region (VT-3) B13.40 - Core Support Structure (VT-3)
B-N-3	Removable Core Support Structures (NOT APPLICABLE TO PNPP)
B-O	Pressure Retaining Welds in Control Rod Housings: B14.10 - Welds in CRD Housing (Surface)
B-P	All Pressure Retaining Components: B15.10 - Pressure Retaining Components (VT-2)
B-Q	Steam Generator Tubing (NOT APPLICABLE TO PNPP)

Examination Category	Examination Item No.1 - Area (Examination Method)
R-A[2]	Risk-Informed Piping Examinations:
	R1.11 - Risk Category 2 & 3 (High) Piping Welds Subject to Thermal Fatigue
	R1.14 - Risk Category 2 & 3 (High) Piping Welds Subject to Crevice Corrosion
	R2.11 - Risk Category 4 & 5 (Medium) Piping Welds Subject to Thermal Fatigue
	R2.14 - Risk Category 4 & 5 (Medium) Piping Welds Subject to Crevice Corrosion
	R2.ND - Risk Category 4 & 5 (Medium) Piping Welds With No Credible Damage Mechanism
	R3.11 - Risk Category 6 & 7 (Low) Piping Welds Subject to Thermal Fatigue
	R3.ND - Risk Category 6 & 7 (Low) Piping Welds with No Credible Damage Mechanism

NOTES:

1. Only those Code item numbers that are applicable at PNPP.
2. Risk Informed ISI for Class 1 piping welds IAW Code Case N-578 was implemented following RFO8 and all Class 1 piping welds now fall under Category R-A.
3. Includes the use of Code Case N-613-1.
4. Includes the use of Code Case N-648-1.
5. Includes the use of Code Case N-652-1.
6. A partial examination is acceptable only when partial disassembly is performed, however a full examination is required if the component is fully disassembled within the same interval. A complete examination is required only once per interval.

2.1 Exemptions

Per the provisions of Section XI, components may be exempted from specific examination requirements providing that they are within the exemption criteria. Listed below are the exemptions applicable to the ISEP with the exception of IWB-1220(a). The phrase in IWB-1220(a), "under normal plant operating conditions" is meant to exclude all ECCS systems. The Perry Unit 1 normal makeup systems are the Control Rod Drive (C11), and the Feedwater/Condensate Transfer systems (N27/N21/P11). These systems are not operable from on-site emergency power and are therefore not exempt from the ISEP.

The following components are exempted from volumetric and surface examination requirements.

1. Components connected to the reactor coolant system and part of the reactor coolant pressure boundary that are of such size and shape so that upon postulated rupture the resulting flow of coolant from the reactor coolant system under normal plant operating conditions is within the capacity of makeup systems which are operable from on-site emergency power [IWB-1220(a)].

2. Piping of 1 inch nominal pipe size and smaller [IWB-1220(b)(1)].

3. Components and their connections in piping of 1 inch nominal pipe size and smaller [IWB-1220(b)(2)].

4. Reactor vessel head connections and associated piping, 2 inches nominal pipe size and smaller, made inaccessible by control rod drive penetrations [IWB-1220(c)].

2.2 Examination Selection Process

For Examination Categories B-G-1, R-A (formerly B-F and B-J), B-K, B-L-2, B-M-1 and B-M-2, not all of the non-exempt components are required to be examined. For these Categories, ASME Section XI (or the appropriate Code Case) delineates the following criteria for selecting the non-exempt components (or areas) to be examined.

2.2.1 B-G-1, Pressure Retaining Bolting Greater Than 2 Inches in Diameter

The criteria for selecting the bolting to be examined is:

1. Volumetric examination of bolting for heat exchangers, pumps, or valves may be conducted on one heat exchanger, one pump, or one valve among a group of bolted connections of similar design and size, such as flanged connections, the examination may be conducted on one bolted connection among the group.

2. Visual examination of bolting for heat exchanges, pumps or valves is required only when the component is examined under Exam Category B-L-2 or B-M-2. Examination of a bolted connection is required only once per interval and may be deferred to the end of the interval or required when the component is disassembled.

Note: This criteria is based upon Code Case N-652-1 and Perry has no B-B Code Category components.

2.2.2 R-A, Risk-Informed Class 1 Pressure Retaining Welds in Piping (formerly B-F and B-J)

The number of welds to be examined in each risk category shall be as follows:

1. For piping segments determined to have degradation mechanisms other than those included in the existing FAC or IGSCC inspection programs, the following number of welds shall be examined as a part of the risk-based program.

   a. For Risk Category 1 welds, the number of inspection locations shall be at least 25% of the total number of welds in this category (currently no Risk Category 1 welds at PNPP).

b. For Risk Category 2 and 3 welds, the number of inspection locations in each category shall be at least 25% of the total number of welds in each risk category.

c. For Risk Category 4 or 5 welds, the number of inspection locations in each category shall be at least 10% of the total number of welds in each risk category.

2. For Risk Category 6 or 7 welds, no examinations are required.

The selection criteria is applied, to the extent practical, individually to each of the Category R-A item numbers (i.e., percentages requirements will generally be met for each item number). The basis for the selection of risk-informed welds to be examined is documented in Technical Assignment File No. 81833.

2.2.3 B-K, Integral Attachments for Vessels, Piping, Pumps, and Valves

The criteria for selecting the integral attachments to be examined are:

1. the attachment is on the outside surface of the component and provides component support as defined in NF-1110;

2. the attachment weld joins the attachment either directly to the surface of the component or to an integrally cast or forged attachment to the component;

3. in the case of multiple vessels of similar design, function and service, only one integrally welded attachment of only one of the multiple vessels shall be selected for examination, however, at least 10% shall be examined;

4. for piping, pumps, and valves, a sample of 10% of the welded attachments associated with the non-exempt component supports shall be selected for examination.

2.2.4 B-L-2, Pump Casings

The criteria for selecting the pump casings to be examined is:

1. examinations are limited to at least one pump in each group of pumps performing similar functions in the system (see Table 2.2.5-1 below);

Table 2.2.5-1 Class 1 Pumps

SYSTEM	PUMP ID	MANUFACTURER
Reactor Recirculation	B33-C001A *	Byron Jackson
Reactor Recirculation	B33-C001B *	Byron Jackson

* Similar design, size, function, and service

2. examination is required only when a pump is disassembled for maintenance, repair, or volumetric examination and is required only once during the inspection interval.

   NOTE: In application this means that neither of the B33 pumps will be pre-selected for examination in a particular period. The selection and scheduling of a pump for examination will be based on situational requirements.

2.2.5 B-M-1, Pressure Retaining Welds in Valve Bodies, and B-M-2, Valve Bodies

The criteria for selecting the valves to be examined are:

1. examinations are limited to one valve within each group of valves that are of the same construction design and manufacturing method, and that perform similar functions in the system (see Table 2.2.6-1 below):

2. examination is required only when a valve is disassembled for maintenance, repair, or volumetric examination and is required only once during the inspection interval.

   NOTE: In application this means that no particular valve within a grouping will be pre-selected for examination in a particular period. The selection and scheduling of valves for examinations will be based on situational requirements.

Table 2.2.6-1 Class 1 Valve Groupings

GROUPING NUMBER	MANUFACTURING METHOD	VALVE DESIGN	PIPING SYSTEM	FUNCTION	WELDED BODY YES	WELDED BODY NO	VALVE ID NUMBER
I	CAST	10″ SAFETY RELIEF VALVES	NUCLEAR BOILER SYSTEM (B21)	SAFETY RELIEF		NO	B21-F041A
				SAFETY RELIEF		NO	B21-F041B
				SAFETY RELIEF		NO	B21-F041C
				SAFETY RELIEF		NO	B21-F041D
				SAFETY RELIEF		NO	B21-F041E
				SAFETY RELIEF		NO	B21-F041F
				SAFETY RELIEF		NO	B21-F041G
				SAFETY RELIEF		NO	B21-F041K
				SAFETY RELIEF		NO	B21-F047B
				SAFETY RELIEF		NO	B21-F047C
				SAFETY RELIEF		NO	B21-F047D
				SAFETY RELIEF		NO	B21-F047F
				SAFETY RELIEF		NO	B21-F047G
				SAFETY RELIEF		NO	B21-F047H
				SAFETY RELIEF		NO	B21-F051A
				SAFETY RELIEF		NO	B21-F051B
				SAFETY RELIEF		NO	B21-F051C
				SAFETY RELIEF		NO	B21-F051D
				SAFETY RELIEF		NO	B21-F051G
II	CAST	26″ GLOBE	NUCLEAR BOILER SYSTEM (B21)	ISOLATION		NO	B21-F022A
				ISOLATION		NO	B21-F022B
				ISOLATION		NO	B21-F022C
				ISOLATION		NO	B21-F022D
				ISOLATION		NO	B21-F028A
				ISOLATION		NO	B21-F028B
				ISOLATION		NO	B21-F028C
				ISOLATION		NO	B21-F028D
III	CAST	20″ CHECK	FEEDWATER (N27)	ISOLATION		NO	B21-F032A
				ISOLATION		NO	B21-F032B
				ISOLATION		NO	N27-F559A
				ISOLATION		NO	N27-F559B

Table 2.2.6-1 Class 1 Valve Groupings (Cont.)

GROUPING NUMBER	MANUFACTURING METHOD	VALVE DESIGN	PIPING SYSTEM	FUNCTION	WELDED BODY YES	WELDED BODY NO	VALVE ID NUMBER
IV	CAST	20″ GATE	FEEDWATER (N27)	MAINTENANCE		NO	N27-F560A
				MAINTENANCE		NO	N27-F560B
V	CAST	22″ GATE	REACTOR RECIRCULATION	MAINTENANCE		NO	B33-F023A
				MAINTENANCE		NO	B33-F023B
VI	CAST	24″ BALL	REACTOR RECIRCULATION	FLOW CONTROL		NO	B33-F060A
				FLOW CONTROL		NO	B33-F060B
VII	CAST	24″ GATE	REACTOR RECIRCULATION	MAINTENANCE		NO	B33-F067A
				MAINTENANCE		NO	B33-F067B
VIII	FORGED	6″ GATE	REACTOR WATER CLEAN UP SYSTEM	ISOLATION	YES		G33-F001
				ISOLATION	YES		G33-F004
IX	FORGED	4″ GATE	REACTOR WATER CLEAN UP SYSTEM	ISOLATION	YES		G33-F100
				ISOLATION	YES		G33-F106
X	FORGED	3″ GATE	REACTOR WATER CLEAN UP SYSTEM	ISOLATION	YES		G33-F101
XI	CAST	12″ GATE	RESIDUAL HEAT REMOVAL	ISOLATION		NO	E12-F008
				ISOLATION		NO	E12-F009
				MAINTENANCE		NO	E12-F010
XII	FORGED	12″ GATE	RESIDUAL HEAT REMOVAL	ISOLATION	YES		E12-F039A
				ISOLATION	YES		E12-F039B
				ISOLATION	YES		E12-F039C
				ISOLATION	YES		E12-F042A
				ISOLATION	YES		E12-F042B
				ISOLATION	YES		E12-F042C
XIII	CAST	12″ CHECK	RESIDUAL HEAT REMOVAL	ISOLATION		NO	E12-F041A
				ISOLATION		NO	E12-F041B
				ISOLATION		NO	E12-F041C

Table 2.2.6-1 Class 1 Valve Groupings (Cont.)

GROUPING NUMBER	MANUFACTURING METHOD	VALVE DESIGN	PIPING SYSTEM	FUNCTION	WELDED BODY YES	WELDED BODY NO	VALVE ID NUMBER
XIV	FORGED	6″ CHECK	RESIDUAL HEAT REMOVAL	ISOLATION	YES		E12-F019
XV	CAST	6″ GLOBE	RESIDUAL HEAT REMOVAL	ISOLATION		NO	E12-F023
XVI	FORGED	12″ GATE	LOW PRESSURE CORE SPRAY	ISOLATION MAINTENANCE	YES YES		E21-F005 E21-F007
XVII	CAST	12″ CHECK	LOW PRESSURE CORE SPRAY	ISOLATION		NO	E21-F006
XVIII	FORGED	12″ GATE	HIGH PRESSURE CORE SPRAY	MAINTENANCE	YES		E22-F036
XIX	CAST	12″ GATE	HIGH PRESSURE CORE SPRAY	ISOLATION		NO	E22-F004
XX	CAST	12″ GATE	HIGH PRESSURE CORE SPRAY	ISOLATION		NO	E22-F005
XXI	FORGED	6″ GATE	REACTOR CORE ISOLATION COOLING	ISOLATION	YES		E51-F013
XXII	FORGED	6″ GATE	REACTOR CORE ISOLATION COOLING	ISOLATION	YES YES		E51-F063 E51-F064
XXIII	CAST	6″ CHECK	REACTOR CORE ISOLATION COOLING	ISOLATION ISOLATION		NO NO	E51-F065 E51-F066

2.3 Additional Examinations

General:

Examinations performed in accordance with Table IWB-2500-1, except for Examination Category B-P, that reveal flaws or relevant indications exceeding acceptance standards of Table IWB-3410-1 shall be extended to include additional examinations during the current outage. The additional examinations shall include an additional number of welds, areas, or parts included in the inspection item equal to the number of welds, areas, or parts included in the inspection item that were scheduled to be performed during the present inspection period. The additional examinations shall be selected from welds, areas, or parts of similar material and service. This additional selection may require inclusion of piping systems other than the one containing the flaws or relevant conditions. As an alternative to the above requirements, an engineering evaluation meeting the requirements within Code Case N-586-1 may be used to determine that additional examination scope.

If the additional examinations reveal flaws or relevant conditions exceeding the acceptance standards of Table IWB-3410-1, the examinations shall be further extended to include additional examinations during the current outage. These additional examinations shall include the remaining number of welds, areas, or parts of similar material and service subject to the same type of flaws or relevant conditions.

For the inspection period following the period in which the additional examinations prescribed above were completed, the examinations shall be performed as normally scheduled.

If welded attachments are examined as a result of identified component support deformation and the results of these examinations exceed the acceptance standards of Table IWB-3410-1, additional examinations shall be performed, if determined necessary, based on the results of the Condition Report investigation/extent of condition evaluation.

Risk-Informed Class 1 Welds:

The proposed RI-ISI program, in all cases, will determine through an engineering evaluation, the root cause of any unacceptable flaw or relevant condition found during examination. The evaluation will include the applicable service conditions and degradation mechanisms to establish that the element(s) will still perform their intended safety function during subsequent operation. Elements not meeting this requirement will be repaired or replaced.

The evaluation will include whether other elements in the segment or segments are subject to the same root cause conditions. Additional examinations will be performed on these elements up to a number equivalent to the number of elements required to be inspected on the segment or segments initially. If unacceptable flaws or relevant conditions are again found similar to the initial problem, the remaining elements identified as susceptible will be examined. No additional examinations will be performed if there are no additional elements identified as being susceptible to the same root cause conditions.

2.4 Successive Examinations

The sequence of component examinations which was established in the first inspection interval shall be repeated in the successive inspection intervals, to the extent practical. As allowed by Code Case N-624, the sequence of examinations may be modified in a manner that optimizes scaffolding, radiological, insulation removal, or other considerations provided the Program B percentage requirements are met.

If a component is accepted for continued service in accordance with IWB-3132.3 or IWB-3142.4, the areas containing the flaws or relevant conditions shall be re-examined during the next three inspection periods listed in the schedule of the inspection program of IWB-2400.

If reexaminations required by IWB-2420(b) reveal that the flaws or relevant conditions remain essentially unchanged for three successive inspection periods, the component examination schedule may revert to the original schedule of successive inspections.

If welded attachments are examined as a result of identified component support deformation, and the results of these examinations exceed the acceptance standards of Table IWB-3410-1, successive examinations shall be performed, if determined necessary, based on the Condition Report evaluation.

2.5 Relief Requests[1,2,4,5]

When compliance to Code examination requirements is not achievable, relief from examinations is requested. Inservice Relief Requests (IR), which are required to be filed with the NRC for components subject to the examination requirements of ASME Section XI, Article IWB are:

IR No./Rev	Submittal Letter	NRC Safety Eval
IR-001, R-3	L-10-246	SE to follow review/approval
IR-009, R-2	L-10-246	SE to follow review/approval
IR-030, R-1[3]	PY-CEI/NRR-2491L	PY-NRR/CEI-1049L, TAC# MA8689
IR-043, R-2	L-10-246	SE to follow review/approval
IR-054, R-1	L-10-246	SE to follow review/approval
IR-056, R-1	L-10-246	SE to follow review/approval

NOTES: 1. Class 1 Inservice Relief Requests IR-002, IR-003, IR-004, IR-005, IR-006, IR-007, IR-008, IR-016, IR-017, IR-018, IR-025, IR-028, IR-029, IR-042, IR-047 and IR-055 have been withdrawn or were not re-submitted for the 3rd inspection interval.

2. Relief Requests IR-31, IR-44, IR-45, IR-51, and IR-52 were submitted for use of Code Cases N-524, N-627, N-623, N-663, and N-613 respectively. The Cases have subsequently been approved for use in Regulatory Guide 1.147 and thus the relief requests are superseded by use of the Cases as stipulated in RG 1.147.

3. Relief Request IR-030 and subsequent safety evaluation PY-NRR/CEI-1049L, TAC# MA8689 was approved for the remainder of PNPP's operating license so it will remain in place as revision 1.

4. Relief Request IR-049 will be re-submitted once the PNPP Probablistic Risk Assessment (PRA) Model is updated to Reg. Guide 1.200 standards for Risk-Informed Inservice Inspection (RI-ISI) Program submittals.

5. Relief Request IR-057 will only be re-submitted after examination is attempted, currently scheduled for 1R15.

The relief requests that are submitted to the NRC for approval are processed through Fleet Licensing and become docketed correspondence. Additionally, copies are captured in the ISI Program Notebook. The copies of the requests exhibited on the following pages are for information only.

Perry Nuclear Power Plant Unit 1
RELIEF REQUEST #IR-001, Rev. 3

1. ASME Code Components Affected

ASME Code Class 1 welds (2) from the Reactor Pressure Vessel (B13); Category B-A; Item No. B1.22 (Meridional Head Welds). The affected components are detailed in the attached table on page 3 of 3 of this relief request including the individual component identification numbers.

2. Applicable Code Edition and Addenda

The applicable ASME B&PV Section XI code of record for Perry NPP for the 3rd 10-Year Inservice Inspection Interval is the 2001 Edition through the 2003 Addenda as modified by 10CFR50.55a.

3. Applicable Code Requirement

Table IWB-2500-1, Category B-A, Item No. B1.22 requires that essentially 100% of the Reactor Pressure Vessel (RPV) bottom head meridional weld examination volume, as defined by Figure IWB-2500-3, be examined. Per Article I-2100, the ultrasonic examination of the RPV welds is to be conducted in accordance with Appendix VIII, Supplements 4 and 6.

4. Impracticality of Compliance

Pursuant to 10 CFR 50.55a(g)(5)(iii), relief is requested from examining essentially 100% of the weld and/or required volume for those components listed in the attached table (See the table for percent complete for each weld during the 2nd 10-year Interval examination) for Perry's third 10-year inspection interval.

The specific cause of the examination limitations for each of the welds is shown in the attached table and accompanying sketch. In general, the limitations are a result of scanning restrictions due to interferences that are a part of the BWR/6 reactor design.

5. Burden Caused by Compliance

The bottom of the Reactor Vessel was designed such that the Control Rod Drive (CRD) housings obstruct large portions of the bottom head meridonal welds causing a limitation in scanning coverage for the welds in this request. The Reactor Vessel skirt support also impacts the scan coverage ability. The only way to remove the obstructions, would be to redesign the reactor vessel bottom head and skirt, which is not practical.

6. Proposed Alternative and Basis for Use

Examinations, meeting all the requirements of ASME Section XI except complete coverage for the entire length of the welds, will continue to be performed on the accessible lengths of the welds. Although the entire length of the weld can not be examined, the required volume of the accessible lengths receives full coverage. Since the construction, operating conditions, and environmental conditions of the non-examined portions are identical to the examined portions, it is reasonable to apply the satisfactory results from the examined to the non-examined portions.

In accordance with Examination Category B-P, VT-2 examinations of the reactor pressure boundary are performed during the Reactor Pressure Vessel (RPV) System Leakage Test at the end of each refueling outage. During this test, the RPV bottom head area is accessible and the accessible portions of the subject welds can be VT-2 examined directly.

The structural integrity of the reactor pressure vessel welds was demonstrated during construction by meeting the requirements of the ASME Code Section III, and additionally by meeting the requirements of ASME Section XI during preservice inspections. The Perry Unit 1 reactor vessel had no reportable indications from preservice or first and second interval inspection results.

Catastrophic reactor vessel failure is precluded by avoiding nil ductile temperatures at significant stress levels according to the design, surveillance and operating provisions described in the Perry USAR Sections 5.3.1 and 5.3.2, and Technical Specifications 3.4.11. Additionally, none of the welds for which relief is being requested are located in the beltline region of the reactor vessel.

In conclusion, because of the initial vessel condition free of reportable indications, protection against brittle reactor vessel failure, the capability to perform partial ultrasonic examinations, and the ability to perform direct VT-2 examinations provide reasonable assurance that the structural integrity of the subject welds is acceptable.

7. Duration of Proposed Alternative

This request is being requested for the 3rd 10-year ISI Interval, which will expire May 17, 2019.

8. Precedents

Revision 2 of this relief request, which requested similar relief for Perry's second 10-year inspection interval, was approved by the NRC (reference TAC No. MA3437, dated 11/22/99).

SYSTEM: Reactor Pressure Vessel

ITEM NO.	WELD I.D.	DESCRIPTION	CODE CATEGORY	% COMPLETE ⊥	% COMPLETE //	
B1.22	1-B13-DG	BOTTOM HEAD CENTER PLATE TO SIDE PLATES, 270° SIDE	BA	29*	29*	OBSTRUCTION PRESENTED BY CRD HOUSING BUNDLE AND SKIRT KNUCKLE.
B1.22	1-B13-DH	BOTTOM HEAD CENTER PLATE TO SIDE PLATES, 90° SIDE	BA	29*	29*	OBSTRUCTION PRESENTED BY CRD HOUSING BUNDLE AND SKIRT KNUCKLE.

THE ABOVE LISTED ITEMS CAN BE FOUND ON ISI ISO SS-305-0006-00104.

⊥ PERPENDICULAR SCAN
// PARALLEL SCAN
* 29 percent represents completion of 80" of the 274" long weld by examining a 40" long section of the weld between the CRD bundle and vessel skirt knuckle at each end of the weld (see sketch below)

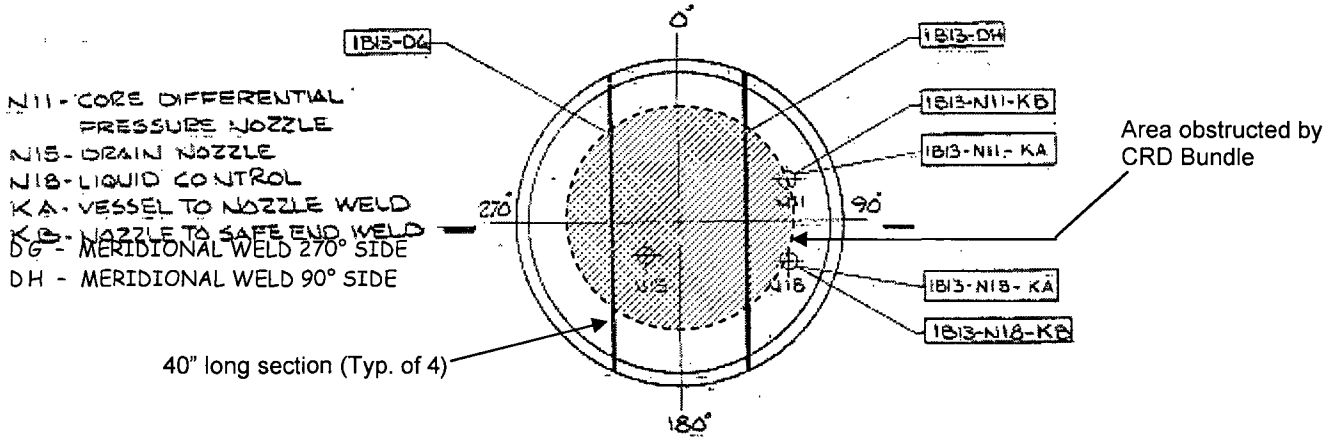

Plan View of RPV Bottom Head

Perry Nuclear Power Plant Unit 1
RELIEF REQUEST #IR-009, Rev. 2

1. ASME Code Component(s) Affected

ASME Code Class 1 welds (32) from the Reactor Pressure Vessel (B13); Category B-O; Item B14.10 (Welds in Control Rod Drive housing).

WELD I.D.'s

1-B13-02/23-FW	1-B13-10/51-FW	1-B13-30/59-FW	1-B13-50/51-FW
1-B13-02/27-FW	1-B13-14/07-FW	1-B13-34/03-FW	1-B13-54/15-FW
1-B13-02/31-FW	1-B13-14/55-FW	1-B13-34/59-FW	1-B13-54/47-FW
1-B13-02/35-FW	1-B13-22/03-FW	1-B13-38/03-FW	1-B13-58/23-FW
1-B13-02/39-FW	1-B13-22/59-FW	1-B13-38/59-FW	1-B13-58/27-FW
1-B13-06/15-FW	1-B13-26/03-FW	1-B13-46/07-FW	1-B13-58/31-FW
1-B13-06/47-FW	1-B13-26/59-FW	1-B13-46/55-FW	1-B13-58/35-FW
1-B13-10/11-FW	1-B13-30/03-FW	1-B13-50/11-FW	1-B13-58/39-FW

The above listed welds are those in the peripheral CRD housings and can be found on ISI ISO drawing SS-305-006-110. They are the Housing to Flange welds.

2. Applicable Code Edition and Addenda

The applicable ASME B&PV Section XI code of record for Perry NPP for the 3rd 10-Year Inservice Inspection Interval is the 2001 Edition through the 2003 Addenda as modified by 10CFR50.55a.

3. Applicable Code Requirement

Table IWB-2500-1, Category B-O, Item No. B14.10 requires essentially 100% of the Reactor Pressure Vessel (RPV) Control Rod Drive (CRD) Housing weld surface or volumetric examination volume, as defined by Figure IWB-2500-18, for 10% of the peripheral CRD housings. Perry has elected to continue to perform surface examinations since volumetric examinations would be limited to one-side only.

4. Reason for Request

Pursuant to 10 CFR 50.55a(a)(3)(i), an alternative to examining 100% of the required surface areas is being requested because of partial inaccessibility due to control line interferences. The insert and withdraw control lines limit the examination coverage to 85% (see Figure IR-009-1). Disassembly of the CRD mechanisms does not facilitate additional coverage for the required surface examination areas. The relief is requested for Perry's third 10-year inspection interval.

Perry Nuclear Power Plant Unit 1
RELIEF REQUEST #IR-009, Rev. 2

5. Proposed Alternative and Basis for Use

Partial examinations, which meet all the requirements of ASME Section XI, will continue to be performed on 4 of the 32 peripheral CRD housing to flange welds. In rounding up to 4 welds, the total weld length of the CRD welds examined exceeds 10% of the total length of all 32 of the peripheral welds.

Portions of welds examined are subject to the same operating and environmental conditions as the unexamined portions. It is, therefore, reasonable to apply the results from examined weld portions to the unexamined portions.

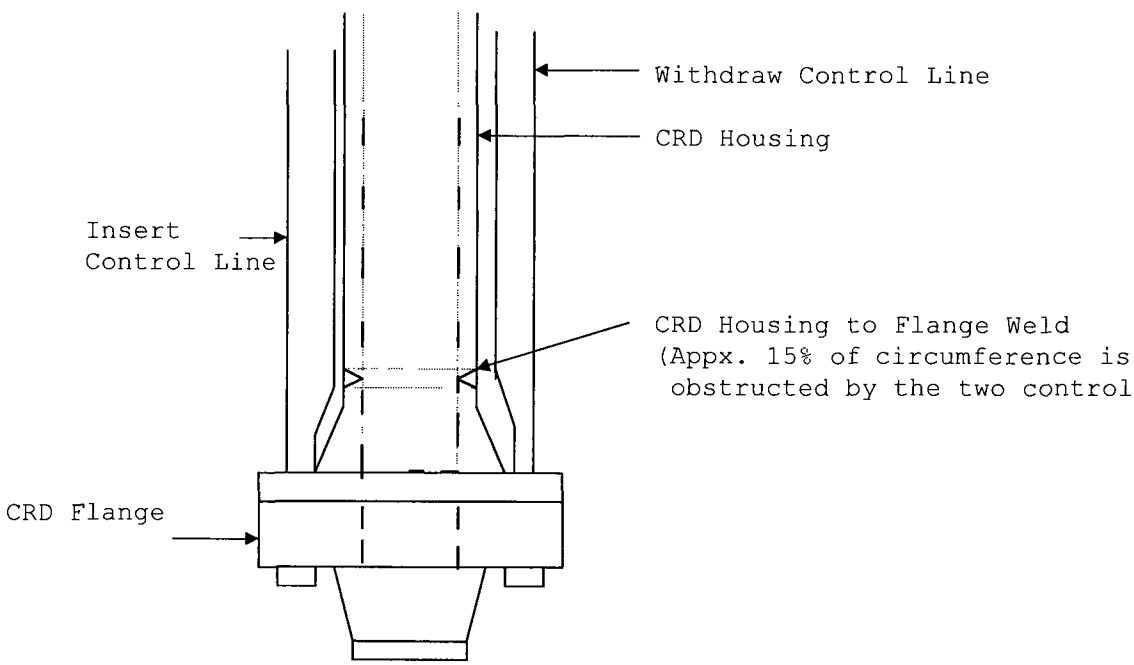

Figure IR-009-1

In summary, because of the capability to perform partial examinations of 85% of each of the selected welds, and examining more than 10% of the total length of all of the peripheral CRD housing to flange welds, it is concluded that the proposed alternative provides an acceptable level of quality and safety.

6. Duration of Proposed Alternative

This request is being requested for the 3rd 10-year ISI Interval, which will expire May 17, 2019.

7. Precedents

Revision 1 of this relief request, which requested similar relief for Perry's second 10-year inspection interval, was approved by the NRC (reference TAC No. MA3437, dated 11/22/99).

Perry Nuclear Power Plant Unit 1
RELIEF REQUEST No. IR-030, Rev. 1

I. Identification of Components

Class 1, Category B-A, Item No. B1.11 reactor pressure vessel pressure retaining circumferential shell welds as identified in the following table:

Mark Number	Description
1B13-AA	Lower Head to Number 1 Shell Ring Circumferential Seam
1B13-AB	Number 1 Shell Ring to Number 2 Shell Ring Circumferential Seam
1B13-AC	Number 2 Shell Ring to Number 3 Shell Ring Circumferential Seam
1B13-AD	Number 3 Shell Ring to Number 4 Shell Ring Circumferential Seam

NOTE: This represents all of PNPP's B1.11 welds.

II. ASME Boiler & Pressure Vessel Code Section XI and 10CFR50.55a(g)(6)(ii)(A)(2) Requirements

In accordance with Table IWB-2500-1 of the 1989 Edition with no Addenda of Section XI, and the Augmented Reactor Vessel examination requirements of 10CFR50.55a(g)(6)(ii)(A)(2), all reactor pressure vessel pressure retaining circumferential shell welds are to be volumetrically examined, for essentially 100% of the weld length by the end of each inspection interval.

III. Relief Requested

Pursuant to 10CFR50.55a(a)(3)(i) and 10CFR50.55a(g)(6)(ii)(A)(5), permanent relief is requested from the inservice inspection requirements of 10CFR50.55a(g) for the circumferential reactor pressure vessel welds. The relief is being requested consistent with the guidance contained in Generic Letter 98-05, "Boiling Water Reactor Licensees Use of the BWRVIP-05 Report to Request Relief from Augmented Examination Requirements on Reactor Pressure Vessel Circumferential Shell Welds."

IV. Basis for Relief

Background Information:

Consistent with the guidance contained in Information Notice 97-63, "Status of NRC Staff's Review of BWRVIP-05," PNPP requested 2 cycle relief from performing volumetric examination of the reactor pressure vessel pressure retaining circumferential shell welds (Rev 0 of this relief request). By letter dated September 18, 1997 (TAC No. M99474), the NRC approved the requested relief.

Technical Basis:

The technical bases for PNPP's request is documented in the BWRVIP-05 report, which was transmitted to the NRC in September 1995, and the NRC Safety Evaluation Report, "Evaluation by the Office of Nuclear Reactor Regulation Related to the Review of the Topical Report by the Boiling Water Reactor Vessel and Internals Project: 'BWR Reactor Pressure Vessel Shell Weld Inspection Recommendations,' (BWRVIP-05)," dated July 28, 1999 [Reference: NRC TAC No. M93925].

The NRC evaluation of the BWRVIP-05 report used the FAVOR code to perform a probabilistic fracture mechanics (PFM) analysis to estimate reactor pressure vessel failure probabilities. Three key assumptions in the PFM analysis are: 1) the neutron fluence was that estimated to be end-of-license (EOL) mean fluence, 2) the chemistry values are mean values based on vessel types, and 3) the potential for beyond design basis events is considered. Although the BWRVIP-05 report provides the technical basis for eliminating inspection of BWR reactor pressure vessel circumferential shell welds, the following information is provided to demonstrate the conservatism of the NRC analysis relative to PNPP's reactor pressure vessel.

Reactor Vessel Integrity

The BWRVIP-05 report concludes that the probability of failure of the BWR reactor pressure vessel circumferential shell welds is orders of magnitude lower than that of the axial shell welds. The BWRVIP-05 report indicates that, for a typical BWR reactor pressure vessel, the failure probability for axial welds is 2.7×10^{-7}, and the failure probability for circumferential welds is 2.2×10^{-41} for 40 years of plant operation (i.e., until end-of-license or 32 EFPY).

ΔRT_{NDT} is a measure of the amount of irradiation embrittlement at peak ID fluence (i.e., within the reactor pressure vessel beltline region). In the case of PNPP, there are no circumferential welds located within the beltline region. As such, the limiting circumferential welds would be 1B13-AB, which is 6" below the bottom of active fuel, and 1B13-AC, which is 16" above the top of active fuel. Of these, it has been determined that 1B13-AB would be the limiting circumferential weld within the vessel (i.e., relative to RT_{NDT}). For plants with reactor pressure vessels fabricated by Chicago Bridge & Iron (CB&I), the mean end-of-license neutron fluence used in the NRC PFM analysis was 0.51E+19 n/cm^2. The highest fluence values anticipated at the end-of-license for welds 1B13-AB and 1B13-AC are 0.19E+19 n/cm^2 and 0.29E+19 n/cm^2 respectively. Thus, the fluence effect on embrittlement

is lower for PNPP's limiting circumferential welds and significant conservatism exists in the already low circumferential weld failure probabilities as related to PNPP.

As shown in Table 1, the calculated embrittlement shift in RT_{NDT} (i.e., ΔRT_{NDT}) at the end-of-license (i.e., 32 EFPY)is 22.8°F for weld 1B13-AB and 35.7°F for weld 1B13-AC. By comparison, Table 2.6-4 of the NRC's Final Safety Evaluation of the BWRVIP-05 Report indicates an embrittlement shift of 109.5°F for CB&I fabricated vessels. Therefore, the calculated ΔRT_{NDT} values for PNPP's limiting circumferential welds are less than, and thus bounded by, the embrittlement shift assumed in the NRC's Final Safety Evaluation of the BWRVIP-05 report.

Furthermore, as seen in the attached Table 1, the calculated Upper Bound RT_{NDT} values for PNPP's limiting circumferential welds at end-of-license are 25.6°F for 1B13-AB and 11.4°F for 1B13-AC. For comparison, the calculated Upper Bound RT_{NDT} for circumferential welds in CB&I fabricated vessels utilizing the information in Table 2.6-4 of the NRC's Final Safety Evaluation of the BWRVIP-05 report is 100.5°F. Thus, the calculated Upper Bound RT_{NDT} values for PNPP's limiting circumferential welds are clearly bounded by the calculated limiting RT_{NDT} for CB&I vessels and additional assurance is provided that the welds are also bounded by the BWRVIP-05 report and NRC plant specific analyses.

Beyond Design Basis Considerations:

At a meeting on August 8, 1997, the NRC staff indicated that the potential for, and consequences of, non-design basis events not addressed in the BWRVIP-05 report should be considered. In particular, the NRC staff stated that non-design basis cold over-pressure transients should be considered. It is highly unlikely that a BWR would experience a cold over-pressure transient. In fact, for a BWR to experience such an event would generally require several operator errors. At the meeting of August 8, 1997, the NRC staff described several types of events that could be precursors to BWR RPV cold over-pressure transients. These were identified as precursors because no cold over-pressure event has occurred at a U. S. BWR. Also, at the August 8, 1997 meeting, the NRC staff identified one actual cold over-pressure event that occurred during shutdown at a non-U. S. BWR. This event apparently included several operational errors that resulted in a maximum RPV pressure of 1150 psi with a temperature range of 79°F to 88°F.

Review of Potential High Pressure Injection Sources

One of PNPP's two high pressure make-up systems is the Reactor Core Isolation Cooling (RCIC) system. This system is driven by a steam turbine. During reactor cold shutdown conditions, no steam is available for operation of this system. Therefore, it is not plausible for this system to contribute to an overpressurization event while the unit is in cold shutdown.

The other high pressure make-up system is the High Pressure Core Spray System (HPCS). Since the reactor vessel level instruments used to close the HPCS injection valve on reactor vessel high water level are calibrated for hot, pressurized conditions, the instruments normally give a false high level signal during mode 4 operations which would prevent the injection valve from opening on a HPCS initiation. Therefore, the possibility of a HPCS initiation causing an overpressurization event while the unit is in cold shutdown is very small. One precursor event for PNPP was identified within the NRC's Independent Assessment Report for BWRVIP-05. The event was the inadvertent starting of the High Pressure Core Spray System (HPCS) diesel generator while in Mode 4 (Cold Shutdown) during maintenance of reactor vessel level instrumentation associated with starting of the HPCS system. The HPCS pump and various valves had been placed in a secured status prior to the event; therefore, no actual injection of the high pressure system was possible. There were no other events during cold shutdown conditions which involved a potential inadvertent initiation of the HPCS system. This event did not result in a violation of the pressure-temperature limits since no actual initiation took place.

During normal cold shutdown conditions, reactor pressure vessel level and pressure are controlled with the Control Rod Drive (CRD) and Reactor Water Cleanup (RWCU) systems using a "feed and bleed" process. The reactor is not taken solid during these times, and plant procedures require opening of the head vent valves after the reactor has been cooled to less than 190°F. If either of these systems were to fail, the Supervising Operator (SO) would adjust the other system to control level. Under these conditions, the CRD system typically injects water into the reactor at a rate of <60 gpm. This slow injection rate allows the operator sufficient time to react to unanticipated level changes and, thus, significantly reduces the possibility of an event that would result in a violation of the pressure-temperature limits.

The Standby Liquid Control (SLC) system is another high pressure water source to the reactor pressure vessel. However, there are no automatic starts associated with this system. SLC injection requires an Operator to manually start the pump from the Control Room or from the local test station. Additionally, the injection rate of the SLC pump is approximately 41 gpm, which would give the Operator ample time to control reactor pressure in the case of an inadvertent injection.

Pressure testing of the RPV is classified as an "Infrequently Performed Test or Evolution" which ensures that these tests receive special management oversight and procedural controls to maintain the plant's level of safety within acceptable limits. PNPP practice is to monitor and maintain a large temperature margin at the initial stages of pressurization while raising the vessel temperature to the hydrostatic test temperature (approximately 140°F). During pressurization and performance of an RPV pressure test, level and pressure are controlled with the CRD and RWCU systems using a "feed and bleed" procedure. Increase in pressure is limited to 50 psi per minute. When at test pressure (1025 to 1050 psig), if the temperature nears the limits of the temperature verse pressure curve, the procedure requires that the pressure be reduced to less than 700 psig. If any other termination criteria is met then the test is placed on hold after the plant is restored to a safe condition as directed by the procedure. These practices minimize the likelihood of exceeding the pressure-temperature limits during performance of the test.

Procedural Controls/Operator Training to Prevent RPV Cold Over-Pressurization

Operating procedural restrictions, operator training, and work control processes at PNPP provide appropriate controls to minimize the potential for RPV cold over-pressurization events.

During normal cold shutdown conditions, reactor water level, pressure, and temperature are maintained within established bands in accordance with operating procedures. Operations policies require that Supervising Operators (SOs) frequently monitor for indications and alarms to detect abnormalities as early as possible. These policies also require that the Unit Supervisor (US) be notified immediately of any changes or abnormalities in indications. Furthermore, procedures require that changes which could affect reactor level, pressure, or temperature only be performed under the knowledge and direction of the US. Therefore, any deviations in reactor water level or temperature from a specified band will be promptly identified and corrected. Finally, the status of plant conditions, and ongoing activities which could affect critical plant parameters, and contingency planning are

discussed by Operators at each shift turnover. This ensures that on-coming Operators are cognizant of any activities which could adversely affect reactor level, pressure, or temperature.

A review of industry operating experience indicates that inadequate work management is a potential contributor to a cold over-pressurization event. At PNPP, work performed during outages is scheduled by the Work Management Section. Dedicated Senior Reactor Operators provide oversight of outage schedule development to avoid conditions which could adversely impact reactor water level, pressure, or temperature. From the outage schedule, a plan of the day (POD) is developed listing the work activities to be performed. These PODs are reviewed and approved by Management, and a copy is maintained in the Control Room. Changes to the PODs require Management review and approval. Additionally, the detailed outage schedule receives a thorough shutdown risk assessment review to ensure defense-in-depth is maintained.

During outages, work is coordinated through the Work Support Center, which provides an additional level of Operations oversight. In the Control Room, the US is required, by procedure, to maintain cognizance of any activity which could potentially affect reactor level or decay heat removal during refueling outages. The SO is required to provide positive control of reactor water level and pressure within the specified bands, and promptly report when operating outside the specified band, including restoration actions being taken. Pre-job briefings are conducted for work activities that have the potential of affecting critical reactor parameters. These briefings are attended by the cognizant individuals involved in the work activity. Expected plant responses and contingency actions to address unexpected conditions or responses that may be encountered are included in the briefing discussion.

The plant procedure for unit shutdown limits reactor pressure to ≤15 psig while flooding up to cold shutdown water level and requires frequent monitoring of reactor pressure to ensure that this limit is not exceeded. Additionally, this procedure requires opening of the head vent valves after the reactor has been cooled to less than 190°F and either the main steam isolation valves are closed or condenser vacuum is broken. Procedural controls for reactor temperature, level, and pressure are an integral part of Operator training. Specifically, Operators are trained in methods of controlling water level within specified limits, as well as responding to abnormal water level conditions outside the established limits. Additionally, SOs receive training on brittle fracture limits and compliance with the Technical Specification pressure-temperature limits curves. Plant-specific

procedures have been developed to provide guidance to the Operators regarding compliance with the Technical Specification requirements on pressure-temperature limits.

PNPP RPV Weld Examination History:

Preservice examinations of PNPP's RPV shell axial and circumferential welds were performed in accordance with the 1977 Edition, Summer 1978 Addenda of Section XI and NRC Regulatory Guide 1.150. The exams found that the RPV shell course plate material contained mid-plate segregate or short-length laminar indications, which were almost all below recordable levels, throughout the vessel. There were no reportable indications. Coverage for the axial and circumferential shell weld exams averaged greater than 80%. For the subject circumferential welds, all but 1B13-AA, which was a one sided exam due to the vessel skirt, were "essentially 100% examined". Within those welds, there were only 8 recordable indications and no reportable indications.

During RFO6, which occurred in the fall of 1997, all of PNPP's axial shell welds were examined utilizing the General Electric automated GERIS-2000 system. Coverage was essentially 100% and, again, there were only a few recordable and no reportable indications. In examining the axial welds, an average incidental coverage of 2-3% of the circumferential welds was also achieved at or near the intersection of the welds.

Summary:

The BWRVIP-05 report provides the technical basis for eliminating inspection of BWR reactor pressure vessel circumferential shell welds. The BWRVIP-05 report concludes that the probability of failure of the BWR reactor pressure vessel circumferential shell welds is orders of magnitude lower than that of the axial shell welds. Based on an assessment of the materials in PNPP's limiting circumferential welds, the conditional probability of reactor pressure vessel failure should be less than that estimated in the NRC's analysis. Based on Operator training and established procedures that have been implemented, the low probability of cold over-pressure transients will limit the frequency of cold over-pressure events to the amounts specified in the NRC's June 30, 1998, safety evaluation.

Perry Nuclear Power Plant Unit 1
RELIEF REQUEST No. IR-030, Rev. 1

V. Alternate Examination

Examinations of essentially 100% of PNPP's axial seam welds will be performed in accordance with 10CFR50.55a(g) during the remaining inspection intervals of PNPP's current license term. The examinations of the axial welds will result in partial coverage, approximately 2-3%, of the circumferential welds at or near the intersection of these welds.

Clarification Note: As a part of updating the Pressure/Temperature curves, Licensing Amendment Request 02-032, the fluence calculations for Perry's vessel materials were updated (refer to PNPP Calculation EA-0246). The updated Peak vessel ID fluence value is .41 x E+19 versus the previous value of .49 x E+19. As the change is in a conservative direction, the basis for this relief request remains valid and the applicable Safety Evaluation given to PNPP (via docket PY-NRR/CEI-1049L, TAC# MA8689) still grants permanent relief for the life of the plant.

Perry Nuclear Power Plant Unit 1
RELIEF REQUEST No. IR-030, Rev. 1

Table 1[1]
Perry Unit 1 RPV Limiting Circumferential Shell Weld Information

Description	**Values for 1B13-AB (Shell Ring 1 to 2)**	**Values for 1B13-AC (Shell Ring 2 to 3)**	**USNRC Limiting Plant Specific Analysis Parameters, SER Table 2.6-4**
Neutron fluence, n/cm^2, at the end of the requested relief period (32 EFPY)[2]	.19 E+19	.29 E+19	.51 E+19
Initial (unirradiated) reference temperature (RT_{NDT})	-20°F	-60°F	-65°F
Weld chemistry factor (CF)	41.0	54.0	134.9[3]
Weld copper content	0.03 %	0.04 %	0.10 %
Weld nickel content	0.81 %	0.97 %	0.99 %
Increase in reference temperature due to irradiation (Δ RT_{NDT})	22.8°F	35.7°F	109.5°F
Margin term	22.8°F	35.7°F	56°F[4]
Mean adjusted reference temperature (Mean ART)	2.8°F	-24.3°F	44.5°F
Upper bound adjusted reference temperature (ART)	25.6°F	11.4°F	100.5°F[4]

(1) Table information developed from GE Nuclear Energy letter LJT-9716, dated August 27, 1997 (assigned Technical Assignment File Number 81658) and report GE-NE-B1301793-01, "Perry Unit 1 RPV Surveillance Materials Testing and Analysis", which was submitted to the NRC in accordance with 10 CFR 50 Appendix H via letter PY-CEI/NRR-2129L, dated February 18, 1997.

(2) The fluence values for welds AB and AC were calculated using the peak ID fluence value reported in GE-NE-B1301793-01 and multiplying by the factors of 0.38 and 0.59, respectively. The factors were conservatively obtained from comparing the elevation of the welds with respect to the core and the relative flux distribution shown in Figure 4-3 of the referenced report.

(3) This value erroneously given as 109.5°F in SER Table 2.6-4. The correct value, derived from Table 1 of 10CFR50.61, is 134.9°F.

(4) Values not actually given in SER Table 2.6-4, but calculated from values therein.

Perry Nuclear Power Plant Unit 1
RELIEF REQUEST #IR-043, Rev. 2

1. ASME Code Component(s) Affected

ASME Code Class 1 welds (18) from the Reactor Water Clean-Up (G33), Residual Heat Removal (E12), Reactor Core Isolation Cooling (E51), Low Pressure Core Spray (E21) and High Pressure Core Spray (E22) Systems; Category B-M-1; Item No.'s B12.30 (valves less than Nominal Pipe Size (NPS) 4) and B12.40 (valves NPS 4 or larger), Valve Body Welds identified below.

ISI Exam ID	Item No.	Description	Group	ISI Isometric Drawing
1G33-F0101-SEAM	B12.30	3" Gate Valve Body Weld	IX	SS-305-671-102
1G33-F0100-SEAM	B12.40	4" Gate Valve Body Weld	IX	SS-305-671-107
1G33-F0106-SEAM	B12.40	4" Gate Valve Body Weld	IX	SS-305-671-105
1G33-F0001-SEAM	B12.40	6" Gate Valve Body Weld	VIII	SS-305-671-103
1G33-F0004-SEAM	B12.40	6" Gate Valve Body Weld	VIII	SS-305-671-104
1E12-F0019-SEAM	B12.40	6" Check Valve Body Weld	XIV	SS-305-642-122
1E51-F0013-SEAM	B12.40	6" Gate Valve Body Weld	XXI	SS-305-631-105
1E51-F0063-SEAM	B12.40	10" Gate Valve Body Weld	XXII	SS-305-632-101
1E51-F0064-SEAM	B12.40	10" Gate Valve Body Weld	XXII	SS-305-632-102
1E12-F0039A-SEAM	B12.40	12" Gate Valve Body Weld	XII	SS-305-642-125
1E12-F0039B-SEAM	B12.40	12" Gate Valve Body Weld	XII	SS-305-642-141
1E12-F0039C-SEAM	B12.40	12" Gate Valve Body Weld	XII	SS-305-642-145
1E12-F0042A-SEAM	B12.40	12" Gate Valve Body Weld	XII	SS-305-642-126
1E12-F0042B-SEAM	B12.40	12" Gate Valve Body Weld	XII	SS-305-642-137
1E12-F0042C-SEAM	B12.40	12" Gate Valve Body Weld	XII	SS-305-642-134
1E21-F0005-SEAM	B12.40	12" Gate Valve Body Weld	XVI	SS-305-705-108
1E21-F0007-SEAM	B12.40	12" Gate Valve Body Weld	XVI	SS-305-705-111
1E22-F0036-SEAM	B12.40	12" Gate Valve Body Weld	XVIII	SS-305-701-111

2. Applicable Code Edition and Addenda

The applicable ASME B&PV Section XI code of record for Perry NPP for the 3rd 10-Year Inservice Inspection Interval is the 2001 Edition through the 2003 Addenda as modified by 10CFR50.55a.

3. Applicable Code Requirement

Table IWB-2500-1, Category B-M-1 requires surface examination of valve body welds in valves less than 4" NPS (Item No. B12.30) and volumetric examination of valve body welds in valves 4" NPS and larger (Item No. B12.40) as defined by Figure IWB-2500-17. Note 3 of Table IWB-2500-1 states that the examinations are limited to at least one valve within each group of valves that are of the same size, construction design (such as globe, gate, or check valves), and manufacturing method, and that perform similar functions in the system (such as containment isolation or overpressure protection).

Within the Reactor Water Cleanup system (G33), there are five (5) Category B-M-1 valves. In accordance with Note 3, the five (5) valves are grouped into three groupings. Thus three (3) Reactor Water Cleanup system valve body welds require Category B-M-1 examinations.

Within the Residual Heat Removal system (E12), there are seven (7) Category B-M-1 valves. In accordance with Note 3, the seven (7) valves are grouped into two groupings. Thus two (2) Residual Heat Removal system valve body welds require Category B-M-1 examinations.

Within the Reactor Core Isolation Cooling system (E51), there are three (3) Category B-M-1 valves. In accordance with Note 3, the three (3) valves are grouped into two groupings. Thus two (2) Reactor Core Isolation Cooling system valve body welds require Category B-M-1 examinations.

Within the Low Pressure Core Spray system (E21), there is one (1) Category B-M-1 valve so that valve body weld requires examination.

Within the High Pressure Core Spray system (E22), there are two (2) Category B-M-1 valves. In accordance with Note 3, the two (2) valves are grouped together. Thus one (1) High Pressure Core Spray system valve body weld requires Category B-M-1 examination.

4. Reason for Request

Pursuant to 10 CFR 50.55a(a)(3)(i), an alternative to performing surface and volumetric examinations on Category B-M-1 pressure retaining welds in valve bodies is being requested due to unnecessary radiation exposure to Nondestructive Examination (NDE) personnel and support workers such as Insulators and Scaffold Builders.

5. Proposed Alternative and Basis for Relief

In accordance with Examination Category B-P, the welds will receive a VT-2 examination each refueling outage during the performance of the system leakage test of the Class 1 boundary.

The structural integrity of the pressure boundary was demonstrated during construction by meeting the requirements of the ASME Code Section III, and additionally by meeting the requirements of ASME Section XI during preservice and inservice examinations with no relevant indications identified.

A search of industry Operating Experience did not identify any failures of valve body welds. In fact, due in part to their excellent performance, the 2008 addenda to ASME Section XI deleted Category B-M-1 valve body weld examinations (ASME B&PVC Standards Committee record 05-1226). A technical paper was presented to the ASME Code Committee, including representatives from the NRC that discussed the contribution to system integrity and concluded that the elimination of surface and volumetric examinations has no affect on valve performance. The conclusion for the technical paper stated:

> "Industry experience has not identified any failures in pump casing or valve body welds. Risk Informed insights have not identified any degradation mechanism specifically associated with these welds. These examinations result in unnecessary radiation exposure to NDE personnel. Degradation of the pump or valve interior would be detected by the Category B-L-2 and B-M-2 [visual testing] VT-1 examinations or by the mechanic working on the component internals, and through wall leakage would be detected by the VT-2 examinations during system pressure tests."

Furthermore, within the Safety Evaluation for revision 1 of this request (TAC No. MD 8196), the NRC stated that staff personnel who participated in the Code change to eliminate Category B-M-1 examinations concluded that the current ASME Code requirement for VT-2 examinations performed on the subject welds each refueling outage provided reasonable assurance of structural integrity.

In summary, because of historical absence of weld failures in valve body welds, absence of a degradation mechanism, the deletion of Category B-M-1 examinations in the 2008 Addenda with support of the NRC personnel on the ASME Section XI Committee, and the ability to detect through-wall leakage during VT-2 system pressure tests it is concluded that the proposed alternative provides an acceptable level of quality and safety while eliminating unnecessary radiation exposure to NDE personnel and support workers.

6. Duration of Proposed Alternative

This request is being requested for the 3rd 10-year ISI Interval, which will expire May 17, 2019.

7. Precedents

Revision 1 of this relief request, which requested similar relief for Perry's second 10-year inspection interval, was approved by the NRC (reference TAC No. MD8196, dated 8/22/08).

Perry Nuclear Power Plant Unit 1
RELIEF REQUEST No. IR-054, Rev. 1

1. ASME Code Component(s) Affected

ASME Code Class 1 welds and nozzle inner radii (25 each) from the Reactor Pressure Vessel (B13); Category B-D; Item No.'s B3.90 (Nozzle-to-Vessel Welds) and B3.100 (Nozzle Inside Radius Section Welds) identified below:

ISI Exam ID	Description
1B13-NIA-KA	22" Recirculation Outlet Nozzle N1A to Vessel Weld
1B13-NIA-IR	22" Recirculation Outlet Nozzle N1A Inner Radius
1B13-N1B-KA	22" Recirculation Outlet Nozzle N1B to Vessel Weld
1B13-N1B-IR	22" Recirculation Outlet Nozzle N1B Inner Radius
1B13-N2A-KA	12" Recirculation Inlet Nozzle N2A to Vessel Weld
1B13-N2A-IR	12" Recirculation Inlet Nozzle N2A Inner Radius
1B13-N2B-KA	12" Recirculation Inlet Nozzle N2B to Vessel Weld
1B13-N2B-IR	12" Recirculation Inlet Nozzle N2B Inner Radius
1B13-N2C-KA	12" Recirculation Inlet Nozzle N2C to Vessel Weld
1B13-N2C-IR	12" Recirculation Inlet Nozzle N2C Inner Radius
1B13-N2D-KA	12" Recirculation Inlet Nozzle N2D to Vessel Weld
1B13-N2D-IR	12" Recirculation Inlet Nozzle N2D Inner Radius
1B13-N2E-KA	12" Recirculation Inlet Nozzle N2E to Vessel Weld
1B13-N2E-IR	12" Recirculation Inlet Nozzle N2E Inner Radius
1B13-N2F-KA	12" Recirculation Inlet Nozzle N2F to Vessel Weld
1B13-N2F-IR	12" Recirculation Inlet Nozzle N2F Inner Radius
1B13-N2G-KA	12" Recirculation Inlet Nozzle N2G to Vessel Weld
1B13-N2G-IR	12" Recirculation Inlet Nozzle N2G Inner Radius
1B13-N2H-KA	12" Recirculation Inlet Nozzle N2H to Vessel Weld
1B13-N2H-IR	12" Recirculation Inlet Nozzle N2H Inner Radius
1B13-N2J-KA	12" Recirculation Inlet Nozzle N2J to Vessel Weld
1B13-N2J-IR	12" Recirculation Inlet Nozzle N2J Inner Radius
1B13-N2K-KA	12" Recirculation Inlet Nozzle N2K to Vessel Weld
1B13-N2K-IR	12" Recirculation Inlet Nozzle N2K Inner Radius
1B13-N3A-KA	26" Main Steam Nozzle N3A to Vessel Weld
1B13-N3A-IR	26" Main Steam Nozzle N3A Inner Radius
1B13-N3B-KA	26" Main Steam Nozzle N3B to Vessel Weld
1B13-N3B-IR	26" Main Steam Nozzle N3B Inner Radius
1B13-N3C-KA	26" Main Steam Nozzle N3C to Vessel Weld
1B13-N3C-IR	26" Main Steam Nozzle N3C Inner Radius
1B13-N3D-KA	26" Main Steam Nozzle N3D to Vessel Weld
1B13-N3D-IR	26" Main Steam Nozzle N3D Inner Radius
1B13-N5A-KA	12" Core Spray Nozzle N5A to Vessel Weld
1B13-N5A-IR	12" Core Spray Nozzle N5A Inner Radius
1B13-N5B-KA	12" Core Spray Nozzle N5B to Vessel Weld
1B13-N5B-IR	12" Core Spray Nozzle N5B Inner Radius
1B13-N6A-KA	12" Low Pressure Core Injection N6A to Vessel Weld
1B13-N6A-IR	12" Low Pressure Core Injection N6A Inner Radius
1B13-N6B-KA	12" Low Pressure Core Injection N6B to Vessel Weld
1B13-N6B-IR	12" Low Pressure Core Injection N6B Inner Radius
1B13-N6C-KA	12" Low Pressure Core Injection N6C to Vessel Weld
1B13-N6C-IR	12" Low Pressure Core Injection N6C Inner Radius

Perry Nuclear Power Plant Unit 1
RELIEF REQUEST No. IR-054, Rev. 1

ISI Exam ID	Description
1B13-N7-KA	6" Top Head Spray Spare Nozzle N7 to Vessel Weld
1B13-N7-1R	6" Top Head Spray Spare Nozzle N7 Inner Radius
1B13-N8-KA	6" Top Head Spray Nozzle N8 to Vessel Weld
1B13-N8-1R	6" Top Head Spray Nozzle N8 Inner Radius
1B13-N9A-KA	4" Jet Pump Instrument Nozzle N9A to Vessel Weld
1B13-N9A-IR	4" Jet Pump Instrument Nozzle N9A Inner Radius
1B13-N9B-KA	4" Jet Pump Instrument Nozzle N9B to Vessel Weld
1B13-N9B-IR	4" Jet Pump Instrument Nozzle N9B Inner Radius

2. Applicable Code Edition and Addenda

The applicable ASME B&PV Section XI code of record for Perry NPP for the 3rd 10-Year Inservice Inspection Interval is the 2001 Edition through the 2003 Addenda as modified by 10CFR50.55a.

3. Applicable Code Requirement

Table IWB-2500-1, Category B-D requires volumetric examination of nozzle-to-vessel (Item No. B3.90) and nozzle inner radii (Item No. B3.100) welds as defined by Figure IWB-2500-7 for 100% of the total population each interval. Examination requirements are given in Subsection IWB, Table IWB-2500-1, "Examination Category B-D Full Penetration Welds of Nozzles in Vessels - Inspection Program B," Item Numbers B3.90 and B3.100, respectively. The method of examination is volumetric. For the extent of examination, all nozzles with full penetration welds to the vessel shell (or head) and integrally cast nozzles must be examined each interval.

4. Reason for Request

Without approval of the relief to incorporate Code Case N-702, all of the Class 1 nozzle-to-vessel weld and nozzle inner radii examinations would be required to be performed during Perry's third inspection interval. The proposed alternative provides an acceptable level of quality and safety and the reduction in scope will provide for a dose savings of as much as 15,000 mREM.

5. Proposed Alternative and Basis for Use

Proposed Alternative:

Pursuant to 10 CFR 50.55a(a)(3)(i), relief is requested from performing examination on 100% of the identified nozzle assemblies. Alternatively, in accordance with Code Case N-702 a minimum of 25% of the nozzle inner radii and nozzle-to-shell welds, including at least one nozzle from each system and nominal pipe size, would be performed. For each of the

identified nozzle assemblies, both the inner radius and the nozzle-to-shell weld would be examined. The following nozzle assemblies would be selected for examination: one of two 22" Recirculation outlet nozzle assemblies; three of the ten 12" Recirculation inlet nozzle assemblies, one of the four 26" main steam nozzle assemblies; one of the two 12" core spray nozzle assemblies; one of the three 12" low pressure core injection nozzle assemblies, one of the two 6" head spray nozzle assemblies, and one of the two 4" jet pump instrumentation nozzle assemblies.

Code Case N-702 proposes that VT-1 visual examination may be used in lieu of volumetric examination for the inner radii (Item B3.100). Note that Perry is already using Code Case N-648-1 in accordance with conditions placed upon the use of Code Case N-648-1 by Regulatory Guide 1.147, which allows VT-1 visual examination for nozzle inner radii. As Code Case N-648-1 is already approved for use at Perry, the specific aspect of utilizing VT-1 visual examinations as allowed by Code Case N-702 is not a part of the request. Despite this allowance, volumetric examinations of the nozzle inner radii of the selected Recirculation Inlet, Core Spray, Low Pressure Core Injection, and Jet Pump Instrumentation nozzles will still be performed as their nozzle inner radii are not fully accessible from inside the vessel.

Basis for Use:

EPRI Technical Report 1003557, "BWRVIP-108: BWR Vessel and Internals Project Technical Basis for the Reduction of Inspection Requirements for the Boiling Water Reactor Nozzle-to-Vessel Shell Welds and Nozzle Blend Radii," provides the basis for Code Case N-702. The evaluation found that failure probabilities due to a Low Temperature Overpressure event at the nozzle blend radius region and nozzle-to-vessel shell weld are very low (i.e., $< 1 \times 10^{-6}$ for 40 years) with or without inservice inspection. The report concludes that inspection of 25% of each nozzle type is technically justified. BWRVIP-108 was submitted to the NRC for review and approval by the Boiling Water Reactor Vessel and Internals Project (BWRVIP) via BWRVIP letter 2002-323 on November 25, 2002.

On December 19, 2007, the NRC issued a safety evaluation report (SER) approving the use of BWRVIP-108 as a basis for using Code Case N-702 Within Section 5 of the SER, it states that each licensee should demonstrate the plant-specific applicability of the BWRVIP-108 report to their units in the relief request by meeting the criteria discussed in Section 5 of the SER.

The applicability of the BWRVIP-108 report to the Perry plant is demonstrated by showing the criteria within Section 5 of the SER are met.

Perry Nuclear Power Plant Unit 1
RELIEF REQUEST No. IR-054, Rev. 1

The generic terms to be used in the SER Section 5 applicability evaluations are:

$C_{i\text{-}RPV}$ = Recirculation inlet nozzles (from BWRVIP 108 model)
$C_{i\text{-}RPV}$ = 19332 psi
$C_{i\text{-}NOZZLE}$ = Recirculation inlet nozzles (from BWRVIP 108 model)
$C_{i\text{-}NOZZLE}$ = 1637 psi
$C_{o\text{-}RPV}$ = Recirculation outlet nozzles (from BWRVIP 108 model)
$C_{o\text{-}RPV}$ = 16171 psi
$C_{o\text{-}NOZZLE}$ = Recirculation outlet nozzles (from BWRVIP 108 model)
$C_{o\text{-}NOZZLE}$ = 1977 psi

The Perry-specific terms to be used in the SER Section 5 applicability evaluations are:

Heatup/Cooldown rate = 100 F°/hr
P = Reactor Pressure Vessel (RPV) normal operating pressure, P=1045 psig (max reactor steam dome pressure per Technical Specification 3.4.12)
r = RPV inner radius, r= 119"
t = RPV wall thickness, t= 7.19"
r_{iN1} = inner radius for Recirculation Outlet N1 nozzles, r_{iN1} = 10"
r_{oN1} = outer radius for Recirculation Outlet N1 nozzles, r_{oN1} = 17.594"
r_{iN2} = inner radius for Recirculation Inlet N2 nozzles, r_{iN2} = 5.813"
r_{oN2} = outer radius for Recirculation Inlet N2 nozzles, r_{oN2} = 11.125"

Given the generic and plant-specific terms, Perry's conformance with the five (5) criteria is demonstrated as follows:

(1) Max RPV Heatup/Cooldown Rate°F/hour

Criterion - the maximum RPV heatup/cooldown rate is limited to < 115° F/hour

In accordance with Technical Specification 3.4.11, RCS heatup and cooldown rates are maintained at ≤ 100° F in any one hour period.

Note that the NRC staff issued a request for additional information (RAI) regarding PNPP plant operation data in recent years with respect to heatups and cooldowns exceeding 115°F per hour (ADAMS Accession No. ML081980628) when revision 0 of this request was submitted in 2008 for use during PNPP's second ISI Interval. PNPP's response, dated September 17, 2008 (ADAMS Accession No. ML082680091), tabulated events over the past 10 years in which the plant had exceeded a heat-up/cooldown rate of 115°F per hour and concluded that for these events, "reactor pressure vessel temperature rates measured from bulk saturation temperature remained within the 100°F per hour

limit stated within plant technical specifications. As documented in the safety evaluation for revision 0 of this request (ADAMS Accession No. ML082960729), the NRC staff agreed with PNPP that these events in which the 115°F heat-up/cooldown rate was exceeded were transients and as a result the first criterion regarding the maximum RPV heat-up/cooldown rate (which is intended to address normal operating conditions) was satisfied.

(2) Recirculation Inlet (N2) Nozzles

Equation to meet criterion: $(pr/t)/C_{i\text{-}RPV} < 1.15$

$[(1045 \times 119) \div 7.19] \div 19332 < 1.15$

The Perry result is $0.89 < 1.15$

(3) Recirculation Inlet (N2) Nozzles

Equation: $[p(r_{oN2}^2 + r_{iN2}^2) \div (r_{oN2}^2 - r_{iN2}^2)] \div C_{i\text{-}NOZZLE} < 1.15$

$[1045 \times (11.125^2 + 5.813^2)] \div (11.125^2 - 5.813^2) \div 1637 < 1.15$

The Perry result is $1.12 < 1.15$

(4) Recirculation Outlet (N1) Nozzles

Equation: $(pr/t)/C_{o\text{-}RPV} < 1.15$

$[(1045 \times 119) \div 7.19] \div 16171 < 1.15$

The Perry result is $1.07 < 1.15$

(5) Recirculation Inlet (N2) Nozzles

Equation: $[p(r_{oN1}^2 + r_{iN1}^2) \div (r_{oN1}^2 - r_{iN1}^2)] \div C_{o\text{-}NOZZLE} < 1.15$

$[1045 \times (17.594^2 + 10^2)] \div (17.594^2 - 10^2) \div 1977 < 1.15$

The Perry result is $1.03 < 1.15$

The results of the above equations demonstrate the applicability of the BWRVIP-108 report to the Perry plant by showing the criteria within Section 5 of the NRC SER is met. Therefore, the basis for using Code Case N-702 is demonstrated for the Perry plant.

Perry Nuclear Power Plant Unit 1
RELIEF REQUEST No. IR-054, Rev. 1

6. Duration of Proposed Alternative

Upon approval by the NRC Staff, this relief request will be utilized for Perry's third 10-Year inspection interval (which will expire May 17, 2019), or until the NRC publishes Code Case N-702 in a future revision of Regulatory Guide 1.147.

7. Precedents

Revision 0 of this relief request, which requested similar relief for Perry's second 10-year inspection interval, was approved by the NRC (reference TAC No. MD8458 dated 12/29/08, ADAMS Accession No. ML082960729).

8. References

1. EPRI Technical Report 1003557, "BWRVIP-108: BWR Vessel and Internals Project Technical Basis for the Reduction of Inspection Requirements for the Boiling Water Reactor Nozzle-to-Vessel Shell Welds and Nozzle Blend Radii," October 2002.

2. ASME Boiler and Pressure Vessel Code, Section XI, "Rules for Inservice Inspection of Nuclear Power Plants," 2001 Edition through the 2003 Addenda.

3. ASME Boiler and Pressure Vessel Code, Code Case N-648-1, "Alternative Requirements for Inner Radius Examinations of Class I Reactor Vessel Nozzles, Section XI, Division 1," September 7, 2001.

4. ASME Boiler and Pressure Vessel Code, Code Case N-702, "Alternative Requirements for Boiling Water Reactor (BWR) Nozzle Inner Radius and Nozzle-to- Shell Welds, Section XI, Division 1," February 20, 2004.

5. BWRVIP letter 2002-323, Carl Terry, BWRVIP Chairman, to NRC Document Control Desk, "Project No. 704- BWRVIP-108: BWR Vessel and Internals Project, Technical Basis for the Reduction of Inspection Requirements for the Boiling Water Reactor Nozzle-to-Vessel Shell Welds and Nozzle Blend Radii," November 25, 2002.

6. Matthew A. Mitchell, Office of Nuclear Reactor Regulation, to Rick Libra, BWRVIP Chairman, "Safety Evaluation of Proprietary EPRI Report, 'BWR Vessel and Internals Project, Technical Basis for the Reduction of Inspection Requirements for the Boiling Water Reactor Nozzle-to-Vessel Shell Welds and Nozzle Inner Radius (BWRVIP-108)'," December 19, 2007.

Perry Nuclear Power Plant Unit 1
RELIEF REQUEST No. IR-056, Rev 1

1. Identification of Components

ASME Section XI, Class 1, Examination Category B-N-1 (Interior of Reactor Vessel), and B-N-2 (Welded Core Support Structures and Interior Attachments to Reactor Vessels), Item Nos. B13.10 - Vessel Interior and B13.40 - Core Support Structure. A detailed list of component numbers is attached on Table 1.

2. Applicable Code Edition and Addenda

Perry Nuclear Power Plant (PNPP) is currently in its third 10-year inspection interval and complies with the 2001 Edition through the 2003 Addenda of ASME Section XI as modified and limited by 10CFR50.55a..

3. Applicable Code Requirements

ASME Section XI requires the examination of components within the Reactor Pressure Vessel, ASME Code Class 1 components. These examinations are included in Table IWB-2500-1, Category B-N-1 and B-N-2 with the following item numbers:

B13.10 Examine accessible areas of the reactor vessel interior each period by the VT-3 method (B-N-1).

B13.40 Examine accessible surfaces of the core support structure each interval by the VT-3 method (B-N-2).

These examinations are performed to assess the general condition of the vessel interior and structural integrity of the core support structures within the boiling water reactor pressure vessel. Note that all the item B13.20 (interior attachment welds within the beltline region) and B13.30 (interior attachment welds beyond the beltline region) will be completed in accordance with the Code of record..

4. Reason for Request

In accordance with 10 CFR 50.55a(a)(3)(i), PNPP is requesting a proposed alternative to the ASME Section XI Code requirements for categories B-N-1 and B-N-2 provided above on the basis that the use of the Boiling Water Reactor Vessel and Internals Project (BWRVIP) guidelines discussed below will provide an acceptable level of quality and safety.

The BWRVIP Inspection and Evaluation (I&E) guidelines have recommended aggressive specific inspection by Boiling Water Reactor (BWR) operators to identify material condition issues with BWR components. A wealth of inspection data has been gathered during these inspections across the BWR industry. The I&E guidelines focus on specific and susceptible components, specify appropriate inspection methods capable of identifying real anticipated degradation mechanisms, and require re-examination at conservative intervals. In contrast, the Code inspection requirements were prepared before the BWRVIP initiative and have not evolved with BWR inspection experience.

Use of this proposed alternative will maintain an adequate level of quality and safety and avoid unnecessary inspections, while conserving radiological dose.

5. Proposed Alternative and Basis for Use

Proposed Alternative:

In lieu of the requirements of ASME Section XI, the proposed alternative is detailed in attached Table 1 for Examination Category B-N-1 and B-N-2, Item Nos. B13.10 and B13.40 and satisfy those requirements in accordance with BWRVIP guideline requirements.

This request for alternative proposes to utilize the identified BWRVIP guidelines (or latest NRC approved version) in lieu of the associated Code requirements, including examination method, examination volume, frequency, training, successive and additional examinations, flaw evaluations, and reporting.

Not all the components addressed by these guidelines are Code components. The particular guidelines that are applicable to the subject Code components are:

BWRVIP-03, "BWR Vessel and Internals Project, Reactor Pressure Vessel and Internals Examination Guidelines"
BWRVIP-18-A, "BWR Core Spray Internals Inspection and Flaw Evaluation Guidelines"
BWRVIP-25, "BWR Core Plate Inspection and Flaw Evaluation Guidelines."
BWRVIP-26-A, "BWR Top Guide Inspection and Flaw Evaluation Guidelines"
BWRVIP-27-A, "BWR Standby Liquid Control System/Core Plate ΔP Inspection and Flaw Evaluation Guidelines."
BWRVIP-38, "BWR Shroud Support Inspection and Flaw Evaluation Guidelines"
BWRVIP-41, "BWR Jet Pump Assembly Inspection and Flaw Evaluation Guidelines"
BWRVIP-42-A, "LPCI Coupling Inspection and Flaw Evaluation Guidelines"
BWRVIP-47-A, "BWR Lower Plenum Inspection and Flaw Evaluation Guidelines"
BWRVIP-48-A, "Vessel ID Attachment Weld Inspection and Flaw Evaluation Guidelines"
BWRVIP-76-A, "BWR Core Shroud Inspection and Flaw Evaluation Guidelines" (see Note 1)
BWRVIP-100-A, "Updated Assessment of the Fracture Toughness of Irradiated Stainless Steel for BWR Core Shrouds"
BWRVIP-183, "Top Guide Grid Beam Inspection and Flaw Evaluation Guidelines"

Note 1. If flaw evaluations are required for BWRVIP-76 examinations, the fracture toughness values of BWRVIP-100-A will be utilized.

Table 1 compares present ASME Examination Category B-N-1 and B-N-2 requirements with the above current BWRVIP guideline requirements, as applicable to PNPP. Table 2 provides the inspection history for PNPP's Core Support Structures.

Any deviations from the referenced BWRVIP Guidelines for the duration of the proposed alternative will be appropriately documented and communicated to the NRC, per the BWRVIP Deviation Disposition Process. Currently, PNPP does not have any deviations from the subject guidelines.

Implementation of the proposed alternative actions of this relief request will be subject to inspection by an Authorized Inspection Agency.

Basis for Use:

BWRs now examine reactor internals in accordance with BWRVIP guidelines. These guidelines have been written to address the safety significant vessel internal components and to examine and evaluate the examination results for these components using appropriate methods and re-examination frequencies. The BWRVIP has established a reporting protocol for examination results and deviations. With the exception of BWRVIP-183, which is currently under NRC review, the NRC has agreed with the BWRVIP approach in principle and has issued Safety Evaluations for these guidelines (see References 2 - 13 below). Therefore, use of these guidelines as an alternative to the subject Code requirements provide an acceptable level of quality and safety and will not adversely impact the health and safety of the public.

As additional justification, Attachment 1 ("Comparison of Code Examination Requirements to BWRVIP Examination Requirements") provides specific examples which compare the inspection requirements of Table IWB-2500-1, Item Nos. B13.10 and B13.40, to the inspection requirements in the BWRVIP documents. BWRVIP documents are provided as examples. This comparison also includes a discussion of the inspection methods. These comparisons demonstrate that use of these guidelines, as an alternative to the subject Code requirements, provides an acceptable level of quality and safety and will not adversely impact the health and safety of the public.

6. Duration of Proposed Alternative

Upon approval by the NRC Staff, this relief request will be utilized for Perry's third 10-Year Interval (which will expire May 17, 2019).

7. Precedents

Revision 0 of this relief request, which requested similar relief for Perry's second 10-year inspection interval, was approved by the NRC (reference TAC No. MD8198 dated 12/16/08, ADAMS Accession No. ML083100284).

A similar relief request was approved for Vermont Yankee Nuclear Power Station as discussed in Reference 1.

8. References

1. Letter from U. S. Nuclear Regulatory Commission (USNRC) to Entergy Nuclear Operations, "Safety Evaluation of Relief Request RI-01, Vermont Yankee Nuclear Power Station" (TAC NO. MC0690), dated September 19, 2005

2. Letter USNRC to BWRVIP, dated June 30, 2008, "Safety Evaluation for Electric Power Research Institute (EPRI) Boiling Water Reactor Vessel and Internals Project (BWRVIP) Report TR-105696-R6 (BWRVIP-03), Revision 6, "BWR Vessel and Internals Project, Reactor Pressure Vessel and Internals Examination Guidelines' (TAC NO. MC2293)"

3. Letter USNRC to BWRVIP, dated September 6, 2005, "NRC Approval Letter of BWRVIP-18-A, BWR Vessel And Internals Project Boiling Water Reactor Core Spray Internals Inspection and Evaluation Guidelines

4. Letter USNRC to BWRVIP, dated December 19, 1999, "Final Safety Evaluation of BWRVIP Vessel and Internals Project, "BWR Vessel and Internals Project, BWR Core Plate Inspection and Flaw Evaluation Guidelines (BWRVIP-25)", EPRI Report TR-107284, December 1996 (TAC NO. M97802)"

5. Letter USNRC to BWRVIP, dated September 9, 2005, "NRC Approval Letter of BWRVIP-26-A, 'BWR Vessel and Internals Project Boiling Water Reactor Top Guide Inspection and Flaw Evaluation Guidelines' "

6. Letter USNRC to BWRVIP, dated June 10, 2004, "Proprietary version of NRC Staff Review of BWRVIP-27-A, 'BWR Standby Liquid Control System/Core Plate ΔP Inspection and Flaw Evaluation Guidelines' "

7. Letter USNRC to BWRVIP, dated July 24, 2000, "Final Safety Evaluation of the 'BWR Vessel and Internals Project, BWR Shroud Support Inspection and Flaw Evaluation Guidelines (BWRVIP-38),' EPRI Report TR-108823 (TAC NO. M99638)"

8. Letter USNRC to BWRVIP, dated February 4, 2001, "Final Safety Evaluation of the 'BWR Vessel and Internals Project, BWR Jet Pump Assembly Inspection and Flaw Evaluation Guidelines (BWRVIP-41),' (TAC NO. M99870)"

9. Letter USNRC to BWRVIP, dated September 9, 2005, "NRC Approval Letter of BWRVIP-42-A, 'BWR Vessel and Internals Project Boiling Water Reactor Low Pressure Coolant Injection and Flaw Evaluation Guidelines' "

10. Letter USNRC to BWRVIP, dated September 9, 2005, "NRC Approval Letter of BWRVIP-47-A, 'BWR Vessel and Internals Project Boiling Water Reactor Lower Plenum Inspection and Flaw Evaluation Guidelines' "

11. Letter USNRC to BWRVIP, dated July 25, 2005, "NRC Approval Letter of BWRVIP-48-A, 'BWR Vessel and Internals Project Vessel ID Attachment Weld Inspection and Flaw Evaluation Guidelines' "

12. Letter USNRC to BWRVIP, dated July 27, 2006, "Safety Evaluation of Proprietary EPRI Report , 'BWR Vessel and Internals Project, BWR Core Shroud Inspection and Flaw Evaluation Guidelines (BWRVIP-76)' "

13. Letter USNRC to BWRVIP, dated November 1, 2007, "NRC Approval Letter with Comment for BWRVIP-100-A, 'BWR Vessel and Internals Project, Updated Assessment of the Fracture Toughness of Irradiated Stainless Steel for BWR Core Shrouds' "

14. BWRVIP-183: BWR Vessel and Internals Project, Top Guide Grid Beam Inspection and Flaw Evaluation Guidelines, EPRI TR Number 1013401, December 2007

Perry Nuclear Power Plant Unit 1
RELIEF REQUEST No. IR-056, Rev 1

TABLE 1

Comparison of ASME Examination Category B-N-1 and B-N-2 Requirements With BWRVIP Guidance Requirements for BWR/6 (1)

ASME Item No. Table IWB-2500-1	Core Support Structure Components	ASME Exam Scope	ASME Exam	ASME Frequency	Applicable BWRVIP Document	BWRVIP Exam Scope	BWRVIP Exam	BWRVIP Frequency
B13.10	Reactor Vessel Interior	Accessible Areas (Non-specific)	VT-3	Each period	BWRVIP-18-A, 26-A, 38, 41, 42-A, 47-A, 48-A, 76-A	Overview examinations of components during BWRVIP examinations are performed to satisfy Code VT-3 inspection requirements.		
B13.40	Shroud Support Plate	Accessible Surfaces	VT-3	Each 10-year Interval	BWRVIP-38, 3.2.2, Figures 3-4, 3-5	Welds H8 and H9(2)	EVT-1 or UT	Based on as-found conditions, to a maximum 6 years for one side EVT-1, 10 years for UT
	Shroud Support Legs	Accessible Surfaces (beneath core plate; rarely accessible)			BWRVIP-38, 3.2.3	Welds H10, H11 and H12	Per BWRVIP-38 NRC SER (7/24/00), inspect with appropriate method (4)	When accessible

Perry Nuclear Power Plant Unit 1
RELIEF REQUEST No. IR-056, Rev 1

ASME Item No. Table IWB-2500-1	Core Support Structure Components	ASME Exam Scope	ASME Exam	ASME Frequency	Applicable BWRVIP Document	BWRVIP Exam Scope	BWRVIP Exam	BWRVIP Frequency
B13.40	Shroud Horizontal welds	Accessible Surfaces	VT-3	Each 10-year Interval	BWRVIP-76-A, 2.2 Figure 2-2[3]	Welds H1-H7 as applicable	EVT-1 or UT	Based on as-found conditions, to a maximum 6 years for one side EVT-1, 10 years for UT
	Shroud Vertical welds				BWRVIP-76-A, 2.3, 3-3, Figures 2-4, 3-2, 3-3	Vertical and Ring Segment Welds	EVT-1 or UT	Maximum 6 years for one-sided EVT-1, 10 years for UT; only required when horizontal welds are found to contain flaws exceeding certain limits or the shroud is a repaired shroud
	Shroud Repairs [3]				BWRVIP-76-A, 3.5, 3.6	Tie-Rod Repair	VT-3	Per repair designer recommendations per BWRVIP-76
	Top Guide and Top Guide Grid				BWRVIP-26-A 3.2 Table 3-2	Top Guide Studs	VT-3	Each 10-year Interval
	Core Support Plate				BWRVIP-25 3.2 Table 3.2	None for BWR/6	N/A	N/A
	Control Rod Guide Tubes (CRGTs)				BWRVIP-47-A 3.2 Table 3.3	CRGT Body Welds and Fuel Support Pins and Lugs	EVT-1 of body welds and VT-3 of pins and lugs	10% of the CRGT Assemblies within 12 years

NOTES:
1) This Table provides an overview of the requirements. For more details, refer to ASME Section XI, Table IWB-2500-1, and the appropriate BWRVIP document.
2) For Perry this results in a requirement of 10% of the weld length. However, for H9 essentially 100% of the weld length was ultrasonically examined.
3) Perry's shroud is a Category B un-repaired shroud.
4) When inspection tooling and methodologies are available, they will be utilized to establish a baseline inspection of these welds. Until such time, and as committed to in BWRVIP-47-A, Section 3.2.5, visual inspections of the lower plenum area (which includes the shroud support legs) will be performed to the extent practical when access is made available through non-routine refueling outage activities (e.g., jet pump disassembly).

Perry Nuclear Power Plant Unit 1
RELIEF REQUEST No. IR-056, Rev 1

TABLE 2 - pg. 1 of 3
Perry Nuclear Power Plant
Reactor Core Support Structures Inspection History

Components in BWRVIP Scope	Date or Frequency of Inspection	Inspection Method Used	Summarize the Following Information: Inspection Results, Repairs, Replacements, Re-inspections
Reactor Vessel Interior (VIP-48-A)	1989 (RF1)	VT-3	In RF1, VT-3 of 80% of total RPV area from the shroud support plate to the flange. The remaining 20% was inaccessible due to the physical lay-out of the Jet Pump area. There were no relevant indications.
	1992 (RF3)	VT-3 and VT-1	In RF3, VT-3 of the accessible areas was performed along with a VT-1 exam of the vessel wall area near the Feedwater Sparger Spray nozzle ruptures (found during RF3, NR# 92-S-045).
	1996 (RF5)	VT-3	In RF5, VT-3 of the accessible areas was performed. There were no relevant indications.
	1999 (RF7)	VT-3	In RF7, VT-3 of the accessible areas was performed. There were no indications.
	2003 (RF9)	VT-3	In RF9, VT-3 of the top head interior was performed. Exam found unusual crud deposits on the upper (i.e., steam region) vessel ID cladding. Under CR-03-01995 the hard deposits were evaluated as acceptable for continued operation.
	2007 (RF11)	VT-3	In RF11, VT-3 of 100% of accessible areas above the top guide flange was performed. No indications beyond previously addressed RPV crud.
Core Shroud (VIP-76-A)	1994 (RF4)	VT-3 and EVT-1	In RF4, VT-3 of entire shroud interior and EVT-1 of the H-3 and H-4 weld inside surfaces at 4 appx 1ft long sample locations. No indications.
	1997 (RF6)	VT-3	In RF6, a Code VT-3 exam was performed on all accessible shroud exterior areas. No indications.
	1999 (RF7)	UT	In RF7, UT examination of the H-3, H-4, H-6A and H-7 welds was performed in accordance with the Category B Plant guidelines of BWRVIP-01. No indications.
	2005 (RF10)	UT	In RF10, UT exams of the H-3 and H-4 welds with the Tecnatom ID tool and H-6A and H-7 with the GE OD Tracker. H-4 and H-6A were two sided exams and H-3 and H-7 were one-sided exams. Shallow cracking was found in H-7. It was less than 10% of the inspected length of 67% of the weld.

Perry Nuclear Power Plant Unit 1
RELIEF REQUEST No. IR-056, Rev 1

TABLE 2 CONT. - pg. 2 of 3
Perry Nuclear Power Plant
Reactor Core Support Structures Inspection History

Components in BWRVIP Scope	Date or Frequency of Inspection	Inspection Method Used	Summarize the Following Information: Inspection Results, Repairs, Replacements, Re-inspections
Shroud Support (VIP-38)	1990 (RF2)	VT-3 & VT-1	In RF2, VT-3 of shroud support plate and VT-1 of the shroud support plate access hole cover. No indications.
	1996 (RF5)	VT-3 & VT-1	In RF5, VT-3 of shroud support plate and VT-1 of the shroud support plate access hole cover. No indications.
	1999 (RF7)	EVT-1	In RF7, baseline EVT-1 exams of the H-8 and H-9 were performed in accordance with BWRVIP-38. No Indications.
	2001 (RF8)	VT-1	In RF8, re-seating of jet pump # 5 provided access to the H-10, H-11 and H-12 welds of the shroud support leg at 90° and appx. 10° of the underside of H-8 and H-9 so they were visually examined with at least VT-1 resolution. No indications.
	2007 (RF11)	EVT-1 & VT-1	In RF11, JP #6 was removed and re-seated due to excess leakage at the transition piece. While disassembled appx. 10° of the underside of H-8 and H-9 were examined with at least VT-1 resolution. Also, the H-10, H-11 and H-12 welds of the shroud support legs at 90° and 120° were examined with EVT-1 resolution. Coverage was appx. 35-50% for the welds of the 90° leg and 25% for the welds of the 120° leg.
Top Guide (Rim, etc.) (VIP-26-A)	1989 (RF1)	VT-3	Top Guide periphery, including 90 studs and tack welds, examined in RF1. No indications.
	1994 (RF4)	VT-3	Top Guide Grid examined in RF4. No indications.
	1999 (RF7)	VT-1 & VT-3	In RF7, performed VT-3 of the Top Guide assembly in accordance with ASME Category B-N-2 and VT-1 of the studs and tack welds in accordance with BWRVIP-26. No indications.
	2005 (RF10)	VT-3	Code B-N-2 exam of accessible portions of Top Guide grid. Due to ID Core Shroud exams, a significant number of the grid cells were vacated and accessible for inspection. No indications.
Core Plate (Rim, etc.) (VIP-25; not applicable to BWR/6s)	1989 (RF1)	VT-3	Accessible core plate areas and fuel support castings examined in RF1. No indications.
	1994 (RF4)	VT-3	All of the hold down bolts examined from shroud interior in RF4. No indications.
	1999 (RF7)	VT-3	In RF7, performed VT-3 exam of the core plate areas made accessible by replacement of 5 Control Rod blades in accordance with ASME Category B-N-2. No indications.

Perry Nuclear Power Plant Unit 1
RELIEF REQUEST No. IR-056, Rev 1

TABLE 2 CONT. - pg. 3 of 3
Perry Nuclear Power Plant
Reactor Core Support Structures Inspection History

Components in BWRVIP Scope	Date or Frequency of Inspection	Inspection Method Used	Summarize the Following Information: Inspection Results, Repairs, Replacements, Re-inspections
CRD Guide Tube (VIP-47-A)	1999 (RF7)	VT-1 & EVT-1	In RF7, performed VT-1 of alignment pins and EVT-1 of the welds of 5 Control Rod Guide Tubes in accordance with BWRVIP-47. No indications.
	2001 (RF8)	VT-1 & EVT-1	In RF8, performed VT-1 of alignment pins and EVT-1 of the welds of an additional 4 Control Rod Guide Tubes in accordance with BWRVIP-47 to meet the 5% completion requirements of BWRVIP-47. No indications.
	2005 (RF10)	VT-1 & EVT-1	In RF10, performed VT-1 of alignment pins and EVT-1 of the welds of an additional 5 Control Rod Guide Tubes in accordance with BWRVIP-47. No indications.
	2007 (RF11)	VT-1 & EVT-1	In RF11, performed VT-1 of alignment pins and EVT-1 of the welds of an additional 4 Control Rod Guide Tubes in accordance with BWRVIP-47 to meet the 10% completion (i.e., 18 out of 177) requirements of BWRVIP-47. No indications.
Access Hole Cover (VIP-180)	1996 (RF5)	VT-1	VT-1 examination of the access hole cover welds in accordance with SIL-409. No indications.
	2007 (RF11)	EVT-1	EVT-1 examination of the access hole cover welds in accordance with the draft BWRVIP AHC Inspection and Evaluation Guidelines. No indications.

Perry Nuclear Power Plant Unit 1
RELIEF REQUEST No. IR-056, Rev 1

IR-056 ATTACHMENT 1

COMPARISON OF CODE EXAMINATION REQUIREMENTS TO BWRVIP EXAMINATION REQUIREMENTS

The following discussion provides a comparison of the examination requirements provided in ASME Section XI, Examination Table IWB-2500-1, Item Nos. B13.10, B13.20, B13.30 and B13.40, to the examination requirements in the BWRVIP guidelines. Specific BWRVIP guidelines are provided as examples for comparisons. This comparison also includes a discussion of the examination methods.

Code Requirement - B13.10 - Reactor Vessel Interior Accessible Areas (B-N-1)

The ASME Section XI Code requires a VT-3 examination of reactor vessel accessible areas, which are defined as the spaces above and below the core made accessible during normal refueling outages. The frequency of these examinations is specified as the first refueling outage, and at intervals of approximately 3 years, during the first inspection interval, and each period during each successive 10-year Inspection Interval. Typically, these examinations are performed every other refueling outage of the Inspection Interval. This examination requirement is a non-specific requirement that is a departure from the traditional Section XI examinations of welds and surfaces. As such, this requirement has been interpreted and satisfied differently across the domestic fleet. The purpose of the examination is to identify relevant conditions such as distortion or displacement of parts; loose, missing, or fractured fasteners; foreign material, corrosion, erosion, or accumulation of corrosion products; wear; and structural degradation.

Portions of the various examinations required by the applicable BWRVIP Guidelines require access to accessible areas of the reactor vessel during each refueling outage. Examination of core spray piping and spargers (BWRVIP-18-A), top guide (BWRVIP-26-A), jet pump welds and components (BWRVIP-41), interior attachments (BWRVIP-48-A), core shroud welds (BWRVIP-76), shroud support (BWRVIP-38), LPCI couplings (BWRVIP-42-A), and lower plenum components (BWRVIP-47-A) provides such access. Locating and examining specific welds and components within the reactor vessel areas above, below (if accessible), and surrounding the core (annulus area) entails access by remote camera systems that essentially perform equivalent VT-3 examination of these areas or spaces as the specific weld or component examinations are performed. This provides an equivalent method of visual examination on a more frequent basis than that required by the ASME Section XI Code. Evidence of wear, structural degradation, loose, missing, or displaced parts, foreign materials, and corrosion product buildup can be, and has been observed during the course of implementing these BWRVIP examination requirements. Therefore, the specified BWRVIP Guideline requirements meet or exceed the subject Code requirements for examination method and frequency of the interior of the reactor vessel. Accordingly, these BWRVIP examination requirements provide an acceptable level of quality and safety as compared to the subject Code requirements.

IR-056 ATTACHMENT 1 - CONT.

Code Requirement - B13.40 - Core Support Structure (B-N-2)

The ASME Code requires a VT-3 examination of accessible surfaces of the integrally welded core support structure each 10-year interval. In a BWR/6 boiling water reactor, the welded core support structure has primarily been considered the shroud itself and the shroud support structure, including the shroud support plate (annulus floor) the shroud support ring, the shroud support welds, and the shroud support legs (if accessible). Historically, this requirement has been interpreted and satisfied differently across the industry. Category B-N-2 is titled, "Integrally Welded Core Support Structures and Interior Attachments to Reactor Vessels." However, since the title for Item No. B13.40 simply states, "Core Support Structure," some plants, including Perry, have also applied the examination requirements to other core support structures such as the Control Rod Guide Tubes, Core Plate and Top Guide assembly. The proposed alternate examinations replace this ASME requirement with specific BWRVIP guidelines that examine susceptible locations for known relevant degradation mechanisms.

- The Code requires a VT-3 of accessible surfaces each 10-year interval.
- The BWRVIP requires as a minimum the same examination method (VT-3) as the Code for integrally welded Core Support Structures, and for specific areas, requires either an enhanced visual examination technique (EVT-1) or ultrasonic examination (UT).

BWRVIP recommended examinations of core support structures are focused on the known susceptible areas of this structure, including the welds and associated weld heat affected zones. As a minimum, the same or superior visual examination technique is required for examination at the same frequency as the code examination requirements. In many locations, the BWRVIP guidelines require a volumetric examination of the susceptible welds at a frequency identical to the Code requirement.

The BWRVIP requires an EVT-1 or UT of core support structures. The core shroud, shroud support plate, and top guide grid are used as examples for comparison between the Code and BWRVIP examination requirements as shown below.

Comparison to BWRVIP Requirements - BWR Core Shroud Examination and Flaw Evaluation Guidelines (BWRVIP-76)

- The Code requires a VT-3 examination of accessible surfaces every 10 years.

Perry Nuclear Power Plant Unit 1
RELIEF REQUEST No. IR-056, Rev 1

IR-056 ATTACHMENT 1 - CONT.

- BWRVIP-76 requires an EVT-1 examination from the inside and outside surface where accessible or UT examination of select circumferential welds, that have not been structurally replaced with a shroud repair, at a calculated "end of interval" (EOI) that will vary depending upon the amount of flaws present, but not to exceed ten years.

Comparison to BWRVIP Requirements - BWR Shroud Support Inspection and Flaw Evaluation Guidelines (BWRVIP-38)

- The Code requires a VT-3 examination of accessible surfaces every 10 years.

- The BWRVIP requires examinations of the support plate to shroud weld (H8) and support plate to reactor vessel weld (H9). Examination coverage is required to be (100% - Flaw Tolerance) or 10% of the weld length, whichever is greater. Examinations are to be performed by EVT-1 or UT from the annulus or UT from the RPV outside surface. Reinspection depends upon the amount of flaws present, but not to exceed six years for EVT-1 or ten years for UT.

Comparison to BWRVIP Requirements - BWR Shroud Top Guide Grid Inspection and Flaw Evaluation Guidelines (BWRVIP-183)

- The Code requires a VT-3 examination of accessible surfaces every 10 years.

- For BWR/6s, which have top guide grids that are fabricated from two solid plates that are welded together and then the grid is machined out, the BWRVIP requires EVT-1 or UT examinations of the rim areas containing the weld and heat affected zone (HAZ) from the top surface of the top guide and two cells in the same plane/axis as the weld every six years. The regions of the grid beam cells to be inspected are the bottom 2 inches of the interior side surfaces.

In summary, the BWRVIP recommended examinations specify locations that are known to be vulnerable to BWR relevant degradation mechanisms rather than "all surfaces". The BWRVIP examination methods (EVT-1 or UT) are superior to the Code required VT-3 for flaw detection and characterization. The BWRVIP examination frequency is equivalent to or more frequent than the examination frequency required by the Code. The superior flaw detection and characterization capability, with an equivalent or more frequent examination frequency and the comparable flaw evaluation criteria, results in the BWRVIP criteria providing a level of quality and safety equivalent to or superior to that provided by the Code requirements.

2.6 Inservice Examination Table

This section contains the listing of all Class 1 components subject to the examination requirements of ASME Section XI, Article IWB. The actual components scheduled for examinations are presented to management for approval 60 days prior to commencing a scheduled refueling outage.

The information presented in the tables is defined below:

- EXAMINATION CATEGORY - The basis for organizing components subject to examination.

- ITEM NO. - A division within an examination category which separates the specific examination requirements.

- MARK NO. - A unique identification number assigned to each weld or component.

- COMPONENT DESCRIPTION - A brief description used to identify the weld or component.

- EXAM METHOD - This abbreviation identifies the unique non-destructive examination method(s) required for the weld or component examination. The abbreviations used in this listing are as follows:

  MT - Magnetic Particle Testing (see Note)
  PT - Dye Penetrant Testing (see Note)
  UT - Ultrasonic Testing
  VT-1 - Visual Examination for Surface Conditions
  VT-2 - Visual Examination for Leakage
  VT-3 - Visual Examination for General Conditions

  NOTE: For carbon steel welds, MT & PT are interchangeable.

- SCHED. - This column identifies the inspection period, or refueling outage(s), in which the weld or component is tentatively scheduled to receive examination. Scheduling by period will indicate 1, 2, 3, or any combination of these numbers. Scheduling by refuel will indicate "R" and the particular outage(s) to be performed. Normally there will be 2 refueling outages within each period. When scheduled by period, examinations can be completed in either of the refueling outages as appropriate to facilitate other outage activities, but must be completed by the end of the period. For those welds or components not scheduled for examination, the letters "NS" will be inserted in place of an inspection period. For those components only examined when a particular situational requirement is met (e.g., when removed or when access is provided to a normally inaccessible item by a maintenance, repair, or replacement activity), the letters "SR" will be inserted in place of an inspection period. Asterisk or plus signs may follow the period or refueling numbers and indicate scheduling peculiarities that are explained in notes at the end of the applicable Examination Category listing.

Inservice Examination Third Interval Listing

ITEM NO.	MARK NO.	COMPONENT DESCRIPTION	EXAM METHOD	PERIOD SCHED.	ISI ISO SS-305-
		EXAMINATION CATEGORY: B-A			
B1.11	1B13-AA	LOWER HEAD TO NO. 1 SHELL RING CIRCUMFERENTIAL SEAM	UT	2*	006-102
B1.11	1B13-AB	NO. 1 SHELL RING TO NO. 2 SHELL RING CIRCUMFERENTIAL SEAM	UT	2*	006-102
B1.11	1B13-AC	NO. 2 SHELL RING TO NO. 3 SHELL RING CIRCUMFERENTIAL SEAM	UT	2*	006-102
B1.11	1B13-AD	NO. 3 SHELL RING TO NO. 4 SHELL RING CIRCUMFERENTIAL SEAM	UT	2*	006-102
B1.30	1B13-AE	NO. 4 SHELL RING TO SHELL FLANGE CIRCUMFERENTIAL SEAM	UT	2**	006-102
B1.40	1B13-AG	TOP HEAD TO TOP HEAD FLANGE	UT, MT	3	006-103
B1.21	1B13-AH	TOP HEAD DOLLAR PLATE TO SIDE PLATES	UT	1	006-103
B1.12	1B13-BA	NO. 1 SHELL RING LONGITUDINAL SEAM @ 17 AZ.	UT	2**	006-102
B1.12	1B13-BB	NO. 1 SHELL RING LONGITUDINAL SEAM @ 137 AZ.	UT	2**	006-102
B1.12	1B13-BC	NO. 1 SHELL RING LONGITUDINAL SEAM @ 257 AZ.	UT	2**	006-102
B1.12	1B13-BD	NO. 2 SHELL RING LONGITUDINAL SEAM @ 40 AZ.	UT	2**	006-102
B1.12	1B13-BE	NO. 2 SHELL RING LONGITUDINAL SEAM @ 160 AZ.	UT	2**	006-102
B1.12	1B13-BF	NO. 2 SHELL RING LONGITUDINAL SEAM @ 280 AZ.	UT	2**	006-102
B1.12	1B13-BG	NO. 3 SHELL RING LONGITUDINAL SEAM @ 79 AZ.	UT	2**	006-102
B1.12	1B13-BJ	NO. 3 SHELL RING LONGITUDINAL SEAM @ 199 AZ.	UT	2**	006-102
B1.12	1B13-BK	NO. 3 SHELL RING LONGITUDINAL SEAM @ 319 AZ.	UT	2**	006-102
B1.12	1B13-BN	NO. 4 SHELL RING LONGITUDINAL SEAM @ 48 AZ.	UT	2**	006-102
B1.12	1B13-BP	NO. 4 SHELL RING LONGITUDINAL SEAM @ 168 AZ.	UT	2**	006-102
B1.12	1B13-BR	NO. 4 SHELL RING LONGITUDINAL SEAM @ 288 AZ.	UT	2**	006-102
B1.22	1B13-DG	BOTTOM CENTER PLATE TO SIDE PLATE, 270 AZ. SIDE	UT	3	006-104
B1.22	1B13-DH	BOTTOM CENTER PLATE TO SIDE PLATE, 90 AZ. SIDE	UT	3	006-104
B1.22	1B13-DJ	TOP HEAD MERIDIONAL WELD @ 75 AZ.	UT	1	006-103
B1.22	1B13-DK	TOP HEAD MERIDIONAL WELD @ 135 AZ.	UT	2	006-103
B1.22	1B13-DM	TOP HEAD MERIDIONAL WELD @ 195 AZ.	UT	3	006-103
B1.22	1B13-DN	TOP HEAD MERIDIONAL WELD @ 255 AZ.	UT	1	006-103
B1.22	1B13-DP	TOP HEAD MERIDIONAL WELD @ 315 AZ.	UT	2	006-103
B1.22	1B13-DR	TOP HEAD MERIDIONAL WELD @ 15 AZ.	UT	3	006-103
B1.50		RPV REPAIR WELDS IN BELTLINE REGION		NS	

* Only examination of that portion of the circumferential seam that intersects with the long seams need be examined in accordance with Relief Request IR-30, Rev. 1.

** To be performed with 1B13-CS-H9 in accordance with BWRVIP-104 in order to coordinate for ALARA and scheduling purposes (all require use of an automated vessel shell weld OD scanner).

EXAMINATION CATEGORY: B-B
NOT APPLICABLE AT PNPP

ITEM NO.	MARK NO.	COMPONENT DESCRIPTION	EXAM METHOD	PERIOD SCHED.	ISI ISO SS-305-
		EXAMINATION CATEGORY: B-D			
B3.90	1B13-N1A-KA	RECIRCULATION OUTLET NOZZLE N1A TO VESSEL	UT	2	006-107
B3.100	1B13-N1A-IR	RECIRCULATION OUTLET NOZZLE N1A INNER RADIUS	UT/VT-1*	2	006-107
B3.90	1B13-N1B-KA	RECIRCULATION OUTLET NOZZLE N1B TO VESSEL	UT	NS IR54	006-107
B3.100	1B13-N1B-IR	RECIRCULATION OUTLET NOZZLE N1B INNER RADIUS	UT/VT-1*	NS IR54	006-107
B3.90	1B13-N2A-KA	RECIRCULATION INLET NOZZLE N2A TO VESSEL	UT	NS IR54	006-107
B3.100	1B13-N2A-IR	RECIRCULATION INLET NOZZLE N2A INNER RADIUS	UT	NS IR54	006-107
B3.90	1B13-N2B-KA	RECIRCULATION INLET NOZZLE N2B TO VESSEL	UT	2	006-107
B3.100	1B13-N2B-IR	RECIRCULATION INLET NOZZLE N2B INNER RADIUS	UT	2	006-107
B3.90	1B13-N2C-KA	RECIRCULATION INLET NOZZLE N2C TO VESSEL	UT	NS IR54	006-107
B3.100	1B13-N2C-IR	RECIRCULATION INLET NOZZLE N2C INNER RADIUS	UT	NS IR54	006-107
B3.90	1B13-N2D-KA	RECIRCULATION INLET NOZZLE N2D TO VESSEL	UT	NS IR54	006-107
B3.100	1B13-N2D-IR	RECIRCULATION INLET NOZZLE N2D INNER RADIUS	UT	NS IR54	006-107
B3.90	1B13-N2E-KA	RECIRCULATION INLET NOZZLE N2E TO VESSEL	UT	2	006-107
B3.100	1B13-N2E-IR	RECIRCULATION INLET NOZZLE N2E INNER RADIUS	UT	2	006-107
B3.90	1B13-N2F-KA	RECIRCULATION INLET NOZZLE N2F TO VESSEL	UT	NS IR54	006-107
B3.100	1B13-N2F-IR	RECIRCULATION INLET NOZZLE N2F INNER RADIUS	UT	NS IR54	006-107
B3.90	1B13-N2G-KA	RECIRCULATION INLET NOZZLE N2G TO VESSEL	UT	NS IR54	006-107
B3.100	1B13-N2G-IR	RECIRCULATION INLET NOZZLE N2G INNER RADIUS	UT	NS IR54	006-107
B3.90	1B13-N2H-KA	RECIRCULATION INLET NOZZLE N2H TO VESSEL	UT	NS IR54	006-107
B3.100	1B13-N2H-IR	RECIRCULATION INLET NOZZLE N2H INNER RADIUS	UT	NS IR54	006-107
B3.90	1B13-N2J-KA	RECIRCULATION INLET NOZZLE N2J TO VESSEL	UT	NS IR54	006-107
B3.100	1B13-N2J-IR	RECIRCULATION INLET NOZZLE N2J INNER RADIUS	UT	NS IR54	006-107
B3.90	1B13-N2K-KA	RECIRCULATION INLET NOZZLE N2K TO VESSEL	UT	2	006-107
B3.100	1B13-N2K-IR	RECIRCULATION INLET NOZZLE N2K INNER RADIUS	UT	2	006-107
B3.90	1B13-N3A-KA	MS NOZZLE N3A TO VESSEL	UT	NS IR54	006-105
B3.100	1B13-N3A-IR	MS NOZZLE N3A INNER RADIUS	UT/VT-1*	NS IR54	006-105
B3.90	1B13-N3B-KA	MS NOZZLE N3B TO VESSEL	UT	NS IR54	006-105
B3.100	1B13-N3B-IR	MS NOZZLE N3B INNER RADIUS	UT/VT-1*	NS IR54	006-105
B3.90	1B13-N3C-KA	MS NOZZLE N3C TO VESSEL	UT	3	006-105
B3.100	1B13-N3C-IR	MS NOZZLE N3C INNER RADIUS	UT/VT-1*	3	006-105
B3.90	1B13-N3D-KA	MS NOZZLE N3D TO VESSEL	UT	NS IR54	006-105
B3.100	1B13-N3D-IR	MS NOZZLE N3D INNER RADIUS	UT/VT-1*	NS IR54	006-105
B3.90	1B13-N4A-KA	FW NOZZLE N4A TO VESSEL	UT	1	006-108
B3.100	1B13-N4A-IR	FW NOZZLE N4A INNER RADIUS	UT	1	006-108
B3.90	1B13-N4B-KA	FW NOZZLE N4B TO VESSEL	UT	1	006-108

ITEM NO.	MARK NO.	COMPONENT DESCRIPTION	EXAM METHOD	PERIOD SCHED.	ISI ISO SS-305-
		EXAMINATION CATEGORY: B-D			
B3.100	1B13-N4B-IR	FW NOZZLE N4B INNER RADIUS	UT	1	006-108
B3.90	1B13-N4C-KA	FW NOZZLE N4C TO VESSEL	UT	1	006-108
B3.100	1B13-N4C-IR	FW NOZZLE N4C INNER RADIUS	UT	1	006-108
B3.90	1B13-N4D-KA	FW NOZZLE N4D TO VESSEL	UT	1	006-108
B3.100	1B13-N4D-IR	FW NOZZLE N4D INNER RADIUS	UT	1	006-108
B3.90	1B13-N4E-KA	FW NOZZLE N4E TO VESSEL	UT	1	006-108
B3.100	1B13-N4E-IR	FW NOZZLE N4E INNER RADIUS	UT	1	006-108
B3.90	1B13-N4F-KA	FW NOZZLE N4F TO VESSEL	UT	1	006-108
B3.100	1B13-N4F-IR	FW NOZZLE N4F INNER RADIUS	UT	1	006-108
B3.90	1B13-N5A-KA	CS NOZZLE N5A TO VESSEL	UT	3	006-109
B3.100	1B13-N5A-IR	CS NOZZLE N5A INNER RADIUS	UT	3	006-109
B3.90	1B13-N5B-KA	CS NOZZLE N5B TO VESSEL	UT	NS IR54	006-109
B3.100	1B13-N5B-IR	CS NOZZLE N5B INNER RADIUS	UT	NS IR54	006-109
B3.90	1B13-N6A-KA	RHR NOZZLE N6A TO VESSEL	UT	NS IR54	006-109
B3.100	1B13-N6A-IR	RHR NOZZLE N6A INNER RADIUS	UT	NS IR54	006-109
B3.90	1B13-N6B-KA	RHR NOZZLE N6B TO VESSEL	UT	NS IR54	006-109
B3.100	1B13-N6B-IR	RHR NOZZLE N6B INNER RADIUS	UT	NS IR54	006-109
B3.90	1B13-N6C-KA	RHR NOZZLE N6C TO VESSEL	UT	3	006-109
B3.100	1B13-N6C-IR	RHR NOZZLE N6C INNER RADIUS	UT	3	006-109
B3.90	1B13-N7-KA	TOP HEAD TO N7 HEAD SPARE NOZZLE	UT	NS IR54	006-103
B3.100	1B13-N7-IR	N7 HEAD SPARE NOZZLE INNER RADIUS	UT/VT-1*	NS IR54	006-103
B3.90	1B13-N8-KA	TOP HEAD TO N8 HEAD SPRAY NOZZLE	UT	1	006-103
B3.100	1B13-N8-IR	N8 HEAD SPRAY NOZZLE INNER RADIUS	UT/VT-1*	1	006-103
B3.90	1B13-N9A-KA	JET PUMP NOZZLE N9A TO VESSEL	UT	NS IR54	006-106
B3.100	1B13-N9A-IR	JET PUMP NOZZLE N9A INNER RADIUS	UT	NS IR54	006-106
B3.90	1B13-N9B-KA	JET PUMP NOZZLE N9B TO VESSEL	UT	2	006-106
B3.100	1B13-N9B-IR	JET PUMP NOZZLE N9B INNER RADIUS	UT	2	006-106
B3.90	1B13-N10-KA	CRD RETURN NOZZLE N10 TO VESSEL	UT	1	006-106
B3.100	1B13-N10-IR	CRD RETURN NOZZLE N10 INNER RADIUS	UT/VT-1*	1	006-106
N/A	1B13-N15-KA	BOTTOM HEAD TO N15 DRAIN NOZZLE	N/A	NS**	006-104
B3.90	1B13-N16-KA	VIBRATION NOZZLE N16 TO VESSEL	UT	3	006-105
B3.100	1B13-N16-IR	VIBRATION NOZZLE N16 INNER RADIUS	UT/VT-1*	3	006-105
B3.110		NOT APPLICABLE AT PNPP			
B3.120		NOT APPLICABLE AT PNPP			

ITEM NO.	MARK NO.	COMPONENT DESCRIPTION	EXAM METHOD	PERIOD SCHED.	ISI ISO SS-305-
		EXAMINATION CATEGORY: B-D			
B3.130		NOT APPLICABLE AT PNPP			
B3.140		NOT APPLICABLE AT PNPP			
B3.150		NOT APPLICABLE AT PNPP			
B3.160		NOT APPLICABLE AT PNPP			

* VT-1, with 1 mil wire resolution, from the vessel interior may be used in lieu of UT in accordance with Code Case N-648-1.

** Not Scheduled Due To exemption in IWB-1220(c) and therefore not counted in the B3.90 weld population.

		EXAMINATION CATEGORY: R-A[1] (Code Case N-578; Formerly B-F)			
R3.ND	1B13-N1A-KB	RR OUTLET NOZZLE N1A TO SAFE-END - DM Weld	UT	R16*	006-107
R3.ND	1B13-N1B-KB	RR OUTLET NOZZLE N1B TO SAFE-END - DM Weld	UT	R16*	006-107
R2.14	1B13-N2A-KB	RR INLET NOZZLE N2A TO SAFE-END - DM Weld	UT	R16*	006-107
R2.14	1B13-N2B-KB	RR INLET NOZZLE N2B TO SAFE-END - DM Weld	UT	R16*	006-107
R2.14	1B13-N2C-KB	RR INLET NOZZLE N2C TO SAFE-END - DM Weld	UT	R16*	006-107
R2.14	1B13-N2D-KB	RR INLET NOZZLE N2D TO SAFE-END - DM Weld	UT	R16*	006-107
R2.14	1B13-N2E-KB	RR INLET NOZZLE N2E TO SAFE-END - DM Weld	UT	R16*	006-107
R2.14	1B13-N2F-KB	RR INLET NOZZLE N2F TO SAFE-END - DM Weld	UT	R16*	006-107
R2.14	1B13-N2G-KB	RR INLET NOZZLE N2G TO SAFE-END - DM Weld	UT	R16*	006-107
R2.14	1B13-N2H-KB	RR INLET NOZZLE N2H TO SAFE-END - DM Weld	UT	R16*	006-107
R2.14	1B13-N2J-KB	RR INLET NOZZLE N2J TO SAFE-END - DM Weld	UT	R16*	006-107
R2.14	1B13-N2K-KB	RR INLET NOZZLE N2K TO SAFE-END - DM Weld	UT	R16*	006-107
R3.ND	1B13-N3A-KB	MS NOZZLE N3A TO SAFE-END	UT	NS	006-105
R3.ND	1B13-N3B-KB	MS NOZZLE N3B TO SAFE-END	UT	NS	006-105
R3.ND	1B13-N3C-KB	MS NOZZLE N3C TO SAFE-END	UT	NS	006-105
R3.ND	1B13-N3D-KB	MS NOZZLE N3D TO SAFE-END	UT	NS	006-105
R2.11	1B13-N4A-KB	FW NOZZLE N4A TO SAFE-END - DM Weld	UT	R14*	006-108
R2.11	1B13-N4B-KB	FW NOZZLE N4B TO SAFE-END - DM Weld	UT	R14*	006-108
R2.11	1B13-N4C-KB	FW NOZZLE N4C TO SAFE-END - DM Weld (Overlayed)	UT	R14*	006-108
R2.11	1B13-N4D-KB	FW NOZZLE N4D TO SAFE-END - DM Weld	UT	R14*	006-108
R2.11	1B13-N4E-KB	FW NOZZLE N4E TO SAFE-END - DM Weld	UT	R14,17*	006-108
R2.11	1B13-N4F-KB	FW NOZZLE N4F TO SAFE-END - DM Weld	UT	R14*	006-108
R1.14	1B13-N5A-KB	LPCS NOZZLE N5A TO SAFE-END - DM Weld	UT	R17*	006-109
R2.ND	1B13-N5A-KC	LPCS NOZZLE N5A SAFE-END TO SAFE-END EXT - DM Weld	UT	1	006-109
R1.14	1B13-N5B-KB	HPCS NOZZLE N5B TO SAFE-END - DM Weld	UT	R17*	006-109
R2.ND	1B13-N5B-KC	HPCS NOZZLE N5B SAFE-END TO SAFE-END EXT - DM Weld	UT	NS	006-109
R1.14	1B13-N6A-KB	RHR NOZZLE N6A TO SAFE-END - DM Weld	UT	R17*	006-109
R2.ND	1B13-N6A-KC	RHR NOZZLE N6A SAFE-END TO SAFE-END EXT - DM Weld	UT	NS	006-109
R1.14	1B13-N6B-KB	RHR NOZZLE N6B TO SAFE-END - DM Weld	UT	R17*	006-109
R2.ND	1B13-N6B-KC	RHR NOZZLE N6B SAFE-END TO SAFE-END EXT - DM Weld	UT	NS	006-109

ITEM NO.	MARK NO.	COMPONENT DESCRIPTION	EXAM METHOD	PERIOD SCHED.	ISI ISO SS-305-
		EXAMINATION CATEGORY: R-A[1] (Code Case N-578; Formerly B-F)			
R1.14	1B13-N6C-KB	RHR NOZZLE N6C TO SAFE-END - DM Weld	UT	R17*	006-109
R2.ND	1B13-N6C-KC	RHR NOZZLE N6C SAFE-END TO SAFE-END EXT - DM Weld	UT	NS	006-109
R3.ND	1B13-N9A-KB	JET PUMP INSTRUMENT NOZZLE N9A TO SAFE-END - DM Weld	UT	R16*	006-106
R3.ND	1B13-N9B-KB	JET PUMP INSTRUMENT NOZZLE N9B TO SAFE-END - DM Weld	UT	R16*	006-106
R3.ND	1B13-N10-KB	CRD RETURN NOZZLE N10 TO SAFE-END	UT	NS	006-106
R3.ND	C41-0004A	1-1/2" PIPE TO PIPE	UT	NS	691-101
R3.ND	1E12-0001A	20" CS PIPE TO 20" SS PIPE - DM Weld (RR TIE-IN)	UT	NS	642-118
R3.ND	1G33-0007B	2" CS TEE TO 2" X 3/4 SS REDUCING INSERT	UT	NS	671-101
R3.ND	1G33-0013A	2" X 1 1/4" CS REDUCING INSERT TO SS THERMAL ELEMENT	UT	NS	671-101
R3.ND	1G33-0020A	2" X 1 1/4" CS REDUCING INSERT TO SS THERMAL ELEMENT	UT	NS	671-101
R3.ND	1G33-0071	4" SS PIPE TO 4" CS PIPE - DM Weld	UT	NS	671-103
R3.ND	1G33-0080	4" CS PIPE TO 4" SS PIPE - DM Weld	UT	1	671-105
R3.ND	1G33-0087	4"x22" SS SWEEPOLET TO 4" CS PIPE - DM Weld (SS has CRC)	UT	NS	671-105
R3.ND	1G33-0106	4" CS PIPE TO 4" SS PIPE - DM Weld	UT	NS	671-107
R3.ND	1G33-0113	4"x 22" SS SWEEPOLET TO 4" CS PIPE - DM Weld (SS has CRC)	UT	NS	671-107

[1] - The Risk-Informed ISI Program is currently under revision and will be submitted for approval prior to the end of the 1st period of the 3rd Interval. The proposed scheduling of the following components is based on the previous Risk-Informed Element Selection, which is not expected to change. These exams will not be credited until a Safety Evaluation is received from the regulatory authority based on the submitted "Request for Alternative", IR-49.

* - Welds selected based on IGSCC (i.e., NUREG 0313, IGSCC Category C or E) and/or Defense-in-Depth considerations rather than being strictly Risk-Informed selection.

ITEM NO.	MARK NO.	COMPONENT DESCRIPTION	EXAM METHOD	PERIOD SCHED.	ISI ISO SS-305-
		EXAMINATION CATEGORY: B-G-1 (Code Case N-652-1)			
B6.10	1B13-A1-N	RPV CLOSURE HEAD NUT	VT-1	1	006-112
B6.20	1B13-A1-S	RPV CLOSURE HEAD STUD	UT	1	006-112
B6.40	1B13-A1-T	RPV SHELL, THREADS IN FLANGE AREA	UT	1	006-112
B6.50	1B13-A1-W	RPV CLOSURE HEAD WASHER	VT-1	1	006-112
B6.10	1B13-A2-N	RPV CLOSURE HEAD NUT	VT-1	1	006-112
B6.20	1B13-A2-S	RPV CLOSURE HEAD STUD	UT	1	006-112
B6.40	1B13-A2-T	RPV SHELL, THREADS IN FLANGE AREA	UT	1	006-112
B6.50	1B13-A2-W	RPV CLOSURE HEAD WASHER	VT-1	1	006-112
B6.10	1B13-A3-N	RPV CLOSURE HEAD NUT	VT-1	1	006-112
B6.20	1B13-A3-S	RPV CLOSURE HEAD STUD	UT	1	006-112
B6.40	1B13-A3-T	RPV SHELL, THREADS IN FLANGE AREA	UT	1	006-112
B6.50	1B13-A3-W	RPV CLOSURE HEAD WASHER	VT-1	1	006-112
B6.10	1B13-A4-N	RPV CLOSURE HEAD NUT	VT-1	1	006-112
B6.20	1B13-A4-S	RPV CLOSURE HEAD STUD	UT	1	006-112
B6.40	1B13-A4-T	RPV SHELL, THREADS IN FLANGE AREA	UT	1	006-112
B6.50	1B13-A4-W	RPV CLOSURE HEAD WASHER	VT-1	1	006-112
B6.10	1B13-A5-N	RPV CLOSURE HEAD NUT	VT-1	1	006-112
B6.20	1B13-A5-S	RPV CLOSURE HEAD STUD	UT	1	006-112
B6.40	1B13-A5-T	RPV SHELL, THREADS IN FLANGE AREA	UT	1	006-112
B6.50	1B13-A5-W	RPV CLOSURE HEAD WASHER	VT-1	1	006-112
B6.10	1B13-A6-N	RPV CLOSURE HEAD NUT	VT-1	1	006-112
B6.20	1B13-A6-S	RPV CLOSURE HEAD STUD	UT	1	006-112
B6.40	1B13-A6-T	RPV SHELL, THREADS IN FLANGE AREA	UT	1	006-112
B6.50	1B13-A6-W	RPV CLOSURE HEAD WASHER	VT-1	1	006-112

ITEM NO.	MARK NO.	COMPONENT DESCRIPTION	EXAM METHOD	PERIOD SCHED.	ISI ISO SS-305-
		EXAMINATION CATEGORY: B-G-1 (Code Case N-652-1)			
B6.10	1B13-A7-N	RPV CLOSURE HEAD NUT	VT-1	1	006-112
B6.20	1B13-A7-S	RPV CLOSURE HEAD STUD	UT	1	006-112
B6.40	1B13-A7-T	RPV SHELL, THREADS IN FLANGE AREA	UT	1	006-112
B6.50	1B13-A7-W	RPV CLOSURE HEAD WASHER	VT-1	1	006-112
B6.10	1B13-A8-N	RPV CLOSURE HEAD NUT	VT-1	1	006-112
B6.20	1B13-A8-S	RPV CLOSURE HEAD STUD	UT	1	006-112
B6.40	1B13-A8-T	RPV SHELL, THREADS IN FLANGE AREA	UT	1	006-112
B6.50	1B13-A8-W	RPV CLOSURE HEAD WASHER	VT-1	1	006-112
B6.10	1B13-A9-N	RPV CLOSURE HEAD NUT	VT-1	1	006-112
B6.20	1B13-A9-S	RPV CLOSURE HEAD STUD	UT	1	006-112
B6.40	1B13-A9-T	RPV SHELL, THREADS IN FLANGE AREA	UT	1	006-112
B6.50	1B13-A9-W	RPV CLOSURE HEAD WASHER	VT-1	1	006-112
B6.10	1B13-B1-N	RPV CLOSURE HEAD NUT	VT-1	1	006-112
B6.20	1B13-B1-S	RPV CLOSURE HEAD STUD	UT	1	006-112
B6.40	1B13-B1-T	RPV SHELL, THREADS IN FLANGE AREA	UT	1	006-112
B6.50	1B13-B1-W	RPV CLOSURE HEAD WASHER	VT-1	1	006-112
B6.10	1B13-B2-N	RPV CLOSURE HEAD NUT	VT-1	1	006-112
B6.20	1B13-B2-S	RPV CLOSURE HEAD STUD	UT	1	006-112
B6.40	1B13-B2-T	RPV SHELL, THREADS IN FLANGE AREA	UT	1	006-112
B6.50	1B13-B2-W	RPV CLOSURE HEAD WASHER	VT-1	1	006-112
B6.10	1B13-B3-N	RPV CLOSURE HEAD NUT	VT-1	1	006-112
B6.20	1B13-B3-S	RPV CLOSURE HEAD STUD	UT	1	006-112
B6.40	1B13-B3-T	RPV SHELL, THREADS IN FLANGE AREA	UT	1	006-112
B6.50	1B13-B3-W	RPV CLOSURE HEAD WASHER	VT-1	1	006-112
B6.10	1B13-B4-N	RPV CLOSURE HEAD NUT	VT-1	1	006-112
B6.20	1B13-B4-S	RPV CLOSURE HEAD STUD	UT	1	006-112
B6.40	1B13-B4-T	RPV SHELL, THREADS IN FLANGE AREA	UT	1	006-112
B6.50	1B13-B4-W	RPV CLOSURE HEAD WASHER	VT-1	1	006-112
B6.10	1B13-B5-N	RPV CLOSURE HEAD NUT	VT-1	1	006-112
B6.20	1B13-B5-S	RPV CLOSURE HEAD STUD	UT	1	006-112
B6.40	1B13-B5-T	RPV SHELL, THREADS IN FLANGE AREA	UT	1	006-112
B6.50	1B13-B5-W	RPV CLOSURE HEAD WASHER	VT-1	1	006-112

ITEM NO.	MARK NO.	COMPONENT DESCRIPTION	EXAM METHOD	PERIOD SCHED.	ISI ISO SS-305-
		EXAMINATION CATEGORY: B-G-1 (Code Case N-652-1)			
B6.10	1B13-B6-N	RPV CLOSURE HEAD NUT	VT-1	1	006-112
B6.20	1B13-B6-S	RPV CLOSURE HEAD STUD	UT	1	006-112
B6.40	1B13-B6-T	RPV SHELL, THREADS IN FLANGE AREA	UT	1	006-112
B6.50	1B13-B6-W	RPV CLOSURE HEAD WASHER	VT-1	1	006-112
B6.10	1B13-B7-N	RPV CLOSURE HEAD NUT	VT-1	1	006-112
B6.20	1B13-B7-S	RPV CLOSURE HEAD STUD	UT	1	006-112
B6.40	1B13-B7-T	RPV SHELL, THREADS IN FLANGE AREA	UT	1	006-112
B6.50	1B13-B7-W	RPV CLOSURE HEAD WASHER	VT-1	1	006-112
B6.10	1B13-B8-N	RPV CLOSURE HEAD NUT	VT-1	1	006-112
B6.20	1B13-B8-S	RPV CLOSURE HEAD STUD	UT	1	006-112
B6.40	1B13-B8-T	RPV SHELL, THREADS IN FLANGE AREA	UT	1	006-112
B6.50	1B13-B8-W	RPV CLOSURE HEAD WASHER	VT-1	1	006-112
B6.10	1B13-B9-N	RPV CLOSURE HEAD NUT	VT-1	1	006-112
B6.20	1B13-B9-S	RPV CLOSURE HEAD STUD	UT	1	006-112
B6.40	1B13-B9-T	RPV SHELL, THREADS IN FLANGE AREA	UT	1	006-112
B6.50	1B13-B9-W	RPV CLOSURE HEAD WASHER	VT-1	1	006-112
B6.10	1B13-C1-N	RPV CLOSURE HEAD NUT	VT-1	2	006-112
B6.20	1B13-C1-S	RPV CLOSURE HEAD STUD	UT	2	006-112
B6.40	1B13-C1-T	RPV SHELL, THREADS IN FLANGE AREA	UT	2	006-112
B6.50	1B13-C1-W	RPV CLOSURE HEAD WASHER	VT-1	2	006-112
B6.10	1B13-C2-N	RPV CLOSURE HEAD NUT	VT-1	2	006-112
B6.20	1B13-C2-S	RPV CLOSURE HEAD STUD	UT	2	006-112
B6.40	1B13-C2-T	RPV SHELL, THREADS IN FLANGE AREA	UT	2	006-112
B6.50	1B13-C2-W	RPV CLOSURE HEAD WASHER	VT-1	2	006-112
B6.10	1B13-C3-N	RPV CLOSURE HEAD NUT	VT-1	2	006-112
B6.20	1B13-C3-S	RPV CLOSURE HEAD STUD	UT	2	006-112
B6.40	1B13-C3-T	RPV SHELL, THREADS IN FLANGE AREA	UT	2	006-112
B6.50	1B13-C3-W	RPV CLOSURE HEAD WASHER	VT-1	2	006-112
B6.10	1B13-C4-N	RPV CLOSURE HEAD NUT	VT-1	2	006-112
B6.20	1B13-C4-S	RPV CLOSURE HEAD STUD	UT	2	006-112
B6.40	1B13-C4-T	RPV SHELL, THREADS IN FLANGE AREA	UT	2	006-112
B6.50	1B13-C4-W	RPV CLOSURE HEAD WASHER	VT-1	2	006-112

ITEM NO.	MARK NO.	COMPONENT DESCRIPTION	EXAM METHOD	PERIOD SCHED.	ISI ISO SS-305-
		EXAMINATION CATEGORY: B-G-1 (Code Case N-652-1)			
B6.10	1B13-C5-N	RPV CLOSURE HEAD NUT	VT-1	2	006-112
B6.20	1B13-C5-S	RPV CLOSURE HEAD STUD	UT	2	006-112
B6.40	1B13-C5-T	RPV SHELL, THREADS IN FLANGE AREA	UT	2	006-112
B6.50	1B13-C5-W	RPV CLOSURE HEAD WASHER	VT-1	2	006-112
B6.10	1B13-C6-N	RPV CLOSURE HEAD NUT	VT-1	2	006-112
B6.20	1B13-C6-S	RPV CLOSURE HEAD STUD	UT	2	006-112
B6.40	1B13-C6-T	RPV SHELL, THREADS IN FLANGE AREA	UT	2	006-112
B6.50	1B13-C6-W	RPV CLOSURE HEAD WASHER	VT-1	2	006-112
B6.10	1B13-C7-N	RPV CLOSURE HEAD NUT	VT-1	2	006-112
B6.20	1B13-C7-S	RPV CLOSURE HEAD STUD	UT	2	006-112
B6.40	1B13-C7-T	RPV SHELL, THREADS IN FLANGE AREA	UT	2	006-112
B6.50	1B13-C7-W	RPV CLOSURE HEAD WASHER	VT-1	2	006-112
B6.10	1B13-C8-N	RPV CLOSURE HEAD NUT	VT-1	2	006-112
B6.20	1B13-C8-S	RPV CLOSURE HEAD STUD	UT	2	006-112
B6.40	1B13-C8-T	RPV SHELL, THREADS IN FLANGE AREA	UT	2	006-112
B6.50	1B13-C8-W	RPV CLOSURE HEAD WASHER	VT-1	2	006-112
B6.10	1B13-C9-N	RPV CLOSURE HEAD NUT	VT-1	2	006-112
B6.20	1B13-C9-S	RPV CLOSURE HEAD STUD	UT	2	006-112
B6.40	1B13-C9-T	RPV SHELL, THREADS IN FLANGE AREA	UT	2	006-112
B6.50	1B13-C9-W	RPV CLOSURE HEAD WASHER	VT-1	2	006-112
B6.10	1B13-D1-N	RPV CLOSURE HEAD NUT	VT-1	1	006-112
B6.20	1B13-D1-S	RPV CLOSURE HEAD STUD	UT	1**	006-112
B6.40	1B13-D1-T	RPV SHELL, THREADS IN FLANGE AREA	UT	1	006-112
B6.50	1B13-D1-W	RPV CLOSURE HEAD WASHER	VT-1	1	006-112
B6.10	1B13-D2-N	RPV CLOSURE HEAD NUT	VT-1	1	006-112
B6.20	1B13-D2-S	RPV CLOSURE HEAD STUD	UT	1**	006-112
B6.40	1B13-D2-T	RPV SHELL, THREADS IN FLANGE AREA	UT	1	006-112
B6.50	1B13-D2-W	RPV CLOSURE HEAD WASHER	VT-1	1	006-112
B6.10	1B13-D3-N	RPV CLOSURE HEAD NUT	VT-1	1	006-112
B6.20	1B13-D3-S	RPV CLOSURE HEAD STUD	UT	1**	006-112
B6.40	1B13-D3-T	RPV SHELL, THREADS IN FLANGE AREA	UT	1	006-112
B6.50	1B13-D3-W	RPV CLOSURE HEAD WASHER	VT-1	1	006-112

ITEM NO.	MARK NO.	COMPONENT DESCRIPTION	EXAM METHOD	PERIOD SCHED.	ISI ISO SS-305-
		EXAMINATION CATEGORY: B-G-1 (Code Case N-652-1)			
B6.10	1B13-D4-N	RPV CLOSURE HEAD NUT	VT-1	1	006-112
B6.20	1B13-D4-S	RPV CLOSURE HEAD STUD	UT	1**	006-112
B6.40	1B13-D4-T	RPV SHELL, THREADS IN FLANGE AREA	UT	1	006-112
B6.50	1B13-D4-W	RPV CLOSURE HEAD WASHER	VT-1	1	006-112
B6.10	1B13-D5-N	RPV CLOSURE HEAD NUT	VT-1	1	006-112
B6.20	1B13-D5-S	RPV CLOSURE HEAD STUD	UT	1**	006-112
B6.40	1B13-D5-T	RPV SHELL, THREADS IN FLANGE AREA	UT	1	006-112
B6.50	1B13-D5-W	RPV CLOSURE HEAD WASHER	VT-1	1	006-112
B6.10	1B13-D6-N	RPV CLOSURE HEAD NUT	VT-1	1	006-112
B6.20	1B13-D6-S	RPV CLOSURE HEAD STUD	UT	1**	006-112
B6.40	1B13-D6-T	RPV SHELL, THREADS IN FLANGE AREA	UT	1	006-112
B6.50	1B13-D6-W	RPV CLOSURE HEAD WASHER	VT-1	1	006-112
B6.10	1B13-D7-N	RPV CLOSURE HEAD NUT	VT-1	2	006-112
B6.20	1B13-D7-S	RPV CLOSURE HEAD STUD	UT	2	006-112
B6.40	1B13-D7-T	RPV SHELL, THREADS IN FLANGE AREA	UT	2	006-112
B6.50	1B13-D7-W	RPV CLOSURE HEAD WASHER	VT-1	2	006-112
B6.10	1B13-D8-N	RPV CLOSURE HEAD NUT	VT-1	2	006-112
B6.20	1B13-D8-S	RPV CLOSURE HEAD STUD	UT	2	006-112
B6.40	1B13-D8-T	RPV SHELL, THREADS IN FLANGE AREA	UT	2	006-112
B6.50	1B13-D8-W	RPV CLOSURE HEAD WASHER	VT-1	2	006-112
B6.10	1B13-D9-N	RPV CLOSURE HEAD NUT	VT-1	2	006-112
B6.20	1B13-D9-S	RPV CLOSURE HEAD STUD	UT	2	006-112
B6.40	1B13-D9-T	RPV SHELL, THREADS IN FLANGE AREA	UT	2	006-112
B6.50	1B13-D9-W	RPV CLOSURE HEAD WASHER	VT-1	2	006-112
B6.10	1B13-E1-N	RPV CLOSURE HEAD NUT	VT-1	2	006-112
B6.20	1B13-E1-S	RPV CLOSURE HEAD STUD	UT	2	006-112
B6.40	1B13-E1-T	RPV SHELL, THREADS IN FLANGE AREA	UT	2	006-112
B6.50	1B13-E1-W	RPV CLOSURE HEAD WASHER	VT-1	2	006-112
B6.10	1B13-E2-N	RPV CLOSURE HEAD NUT	VT-1	2	006-112
B6.20	1B13-E2-S	RPV CLOSURE HEAD STUD	UT	2	006-112
B6.40	1B13-E2-T	RPV SHELL, THREADS IN FLANGE AREA	UT	2	006-112
B6.50	1B13-E2-W	RPV CLOSURE HEAD WASHER	VT-1	2	006-112

ITEM NO.	MARK NO.	COMPONENT DESCRIPTION	EXAM METHOD	PERIOD SCHED.	ISI ISO SS-305-
		EXAMINATION CATEGORY: B-G-1 (Code Case N-652-1)			
B6.10	1B13-E3-N	RPV CLOSURE HEAD NUT	VT-1	2	006-112
B6.20	1B13-E3-S	RPV CLOSURE HEAD STUD	UT	2	006-112
B6.40	1B13-E3-T	RPV SHELL, THREADS IN FLANGE AREA	UT	2	006-112
B6.50	1B13-E3-W	RPV CLOSURE HEAD WASHER	VT-1	2	006-112
B6.10	1B13-E4-N	RPV CLOSURE HEAD NUT	VT-1	2	006-112
B6.20	1B13-E4-S	RPV CLOSURE HEAD STUD	UT	2	006-112
B6.40	1B13-E4-T	RPV SHELL, THREADS IN FLANGE AREA	UT	2	006-112
B6.50	1B13-E4-W	RPV CLOSURE HEAD WASHER	VT-1	2	006-112
B6.10	1B13-E5-N	RPV CLOSURE HEAD NUT	VT-1	2	006-112
B6.20	1B13-E5-S	RPV CLOSURE HEAD STUD	UT	2	006-112
B6.40	1B13-E5-T	RPV SHELL, THREADS IN FLANGE AREA	UT	2	006-112
B6.50	1B13-E5-W	RPV CLOSURE HEAD WASHER	VT-1	2	006-112
B6.10	1B13-E6-N	RPV CLOSURE HEAD NUT	VT-1	2	006-112
B6.20	1B13-E6-S	RPV CLOSURE HEAD STUD	UT	2	006-112
B6.40	1B13-E6-T	RPV SHELL, THREADS IN FLANGE AREA	UT	2	006-112
B6.50	1B13-E6-W	RPV CLOSURE HEAD WASHER	VT-1	2	006-112
B6.10	1B13-E7-N	RPV CLOSURE HEAD NUT	VT-1	2	006-112
B6.20	1B13-E7-S	RPV CLOSURE HEAD STUD	UT	2	006-112
B6.40	1B13-E7-T	RPV SHELL, THREADS IN FLANGE AREA	UT	2	006-112
B6.50	1B13-E7-W	RPV CLOSURE HEAD WASHER	VT-1	2	006-112
B6.10	1B13-E8-N	RPV CLOSURE HEAD NUT	VT-1	2	006-112
B6.20	1B13-E8-S	RPV CLOSURE HEAD STUD	UT	2	006-112
B6.40	1B13-E8-T	RPV SHELL, THREADS IN FLANGE AREA	UT	2	006-112
B6.50	1B13-E8-W	RPV CLOSURE HEAD WASHER	VT-1	2	006-112
B6.10	1B13-E9-N	RPV CLOSURE HEAD NUT	VT-1	2	006-112
B6.20	1B13-E9-S	RPV CLOSURE HEAD STUD	UT	2	006-112
B6.40	1B13-E9-T	RPV SHELL, THREADS IN FLANGE AREA	UT	2	006-112
B6.50	1B13-E9-W	RPV CLOSURE HEAD WASHER	VT-1	2	006-112
B6.10	1B13-F1-N	RPV CLOSURE HEAD NUT	VT-1	2	006-112
B6.20	1B13-F1-S	RPV CLOSURE HEAD STUD	UT	2	006-112
B6.40	1B13-F1-T	RPV SHELL, THREADS IN FLANGE AREA	UT	2	006-112
B6.50	1B13-F1-W	RPV CLOSURE HEAD WASHER	VT-1	2	006-112

ITEM NO.	MARK NO.	COMPONENT DESCRIPTION	EXAM METHOD	PERIOD SCHED.	ISI ISO SS-305-
		EXAMINATION CATEGORY: B-G-1 (Code Case N-652-1)			
B6.10	1B13-F2-N	RPV CLOSURE HEAD NUT	VT-1	2	006-112
B6.20	1B13-F2-S	RPV CLOSURE HEAD STUD	UT	2	006-112
B6.40	1B13-F2-T	RPV SHELL, THREADS IN FLANGE AREA	UT	2	006-112
B6.50	1B13-F2-W	RPV CLOSURE HEAD WASHER	VT-1	2	006-112
B6.10	1B13-F3-N	RPV CLOSURE HEAD NUT	VT-1	2	006-112
B6.20	1B13-F3-S	RPV CLOSURE HEAD STUD	UT	2	006-112
B6.40	1B13-F3-T	RPV SHELL, THREADS IN FLANGE AREA	UT	2	006-112
B6.50	1B13-F3-W	RPV CLOSURE HEAD WASHER	VT-1	2	006-112
B6.10	1B13-F4-N	RPV CLOSURE HEAD NUT	VT-1	3	006-112
B6.20	1B13-F4-S	RPV CLOSURE HEAD STUD	UT	3	006-112
B6.40	1B13-F4-T	RPV SHELL, THREADS IN FLANGE AREA	UT	3	006-112
B6.50	1B13-F4-W	RPV CLOSURE HEAD WASHER	VT-1	3	006-112
B6.10	1B13-F5-N	RPV CLOSURE HEAD NUT	VT-1	3	006-112
B6.20	1B13-F5-S	RPV CLOSURE HEAD STUD	UT	3	006-112
B6.40	1B13-F5-T	RPV SHELL, THREADS IN FLANGE AREA	UT	3	006-112
B6.50	1B13-F5-W	RPV CLOSURE HEAD WASHER	VT-1	3	006-112
B6.10	1B13-F6-N	RPV CLOSURE HEAD NUT	VT-1	3	006-112
B6.20	1B13-F6-S	RPV CLOSURE HEAD STUD	UT	3	006-112
B6.40	1B13-F6-T	RPV SHELL, THREADS IN FLANGE AREA	UT	3	006-112
B6.50	1B13-F6-W	RPV CLOSURE HEAD WASHER	VT-1	3	006-112
B6.10	1B13-F7-N	RPV CLOSURE HEAD NUT	VT-1	3	006-112
B6.20	1B13-F7-S	RPV CLOSURE HEAD STUD	UT	3	006-112
B6.40	1B13-F7-T	RPV SHELL, THREADS IN FLANGE AREA	UT	3	006-112
B6.50	1B13-F7-W	RPV CLOSURE HEAD WASHER	VT-1	3	006-112
B6.10	1B13-F8-N	RPV CLOSURE HEAD NUT	VT-1	3	006-112
B6.20	1B13-F8-S	RPV CLOSURE HEAD STUD	UT	3	006-112
B6.40	1B13-F8-T	RPV SHELL, THREADS IN FLANGE AREA	UT	3	006-112
B6.50	1B13-F8-W	RPV CLOSURE HEAD WASHER	VT-1	3	006-112
B6.10	1B13-F9-N	RPV CLOSURE HEAD NUT	VT-1	3	006-112
B6.20	1B13-F9-S	RPV CLOSURE HEAD STUD	UT	3	006-112
B6.40	1B13-F9-T	RPV SHELL, THREADS IN FLANGE AREA	UT	3	006-112
B6.50	1B13-F9-W	RPV CLOSURE HEAD WASHER	VT-1	3	006-112

ITEM NO.	MARK NO.	COMPONENT DESCRIPTION	EXAM METHOD	PERIOD SCHED.	ISI ISO SS-305-
		EXAMINATION CATEGORY: B-G-1 (Code Case N-652-1)			
B6.10	1B13-G1-N	RPV CLOSURE HEAD NUT	VT-1	3	006-112
B6.20	1B13-G1-S	RPV CLOSURE HEAD STUD	UT	3	006-112
B6.40	1B13-G1-T	RPV SHELL, THREADS IN FLANGE AREA	UT	3	006-112
B6.50	1B13-G1-W	RPV CLOSURE HEAD WASHER	VT-1	3	006-112
B6.10	1B13-G2-N	RPV CLOSURE HEAD NUT	VT-1	3	006-112
B6.20	1B13-G2-S	RPV CLOSURE HEAD STUD	UT	3	006-112
B6.40	1B13-G2-T	RPV SHELL, THREADS IN FLANGE AREA	UT	3	006-112
B6.50	1B13-G2-W	RPV CLOSURE HEAD WASHER	VT-1	3	006-112
B6.10	1B13-G3-N	RPV CLOSURE HEAD NUT	VT-1	3	006-112
B6.20	1B13-G3-S	RPV CLOSURE HEAD STUD	UT	3	006-112
B6.40	1B13-G3-T	RPV SHELL, THREADS IN FLANGE AREA	UT	3	006-112
B6.50	1B13-G3-W	RPV CLOSURE HEAD WASHER	VT-1	3	006-112
B6.10	1B13-G4-N	RPV CLOSURE HEAD NUT	VT-1	3	006-112
B6.20	1B13-G4-S	RPV CLOSURE HEAD STUD	UT	3	006-112
B6.40	1B13-G4-T	RPV SHELL, THREADS IN FLANGE AREA	UT	3	006-112
B6.50	1B13-G4-W	RPV CLOSURE HEAD WASHER	VT-1	3	006-112
B6.10	1B13-G5-N	RPV CLOSURE HEAD NUT	VT-1	3	006-112
B6.20	1B13-G5-S	RPV CLOSURE HEAD STUD	UT	3	006-112
B6.40	1B13-G5-T	RPV SHELL, THREADS IN FLANGE AREA	UT	3	006-112
B6.50	1B13-G5-W	RPV CLOSURE HEAD WASHER	VT-1	3	006-112
B6.10	1B13-G6-N	RPV CLOSURE HEAD NUT	VT-1	3	006-112
B6.20	1B13-G6-S	RPV CLOSURE HEAD STUD	UT	3	006-112
B6.40	1B13-G6-T	RPV SHELL, THREADS IN FLANGE AREA	UT	3	006-112
B6.50	1B13-G6-W	RPV CLOSURE HEAD WASHER	VT-1	3	006-112
B6.10	1B13-G7-N	RPV CLOSURE HEAD NUT	VT-1	3	006-112
B6.20	1B13-G7-S	RPV CLOSURE HEAD STUD	UT	3	006-112
B6.40	1B13-G7-T	RPV SHELL, THREADS IN FLANGE AREA	UT	3	006-112
B6.50	1B13-G7-W	RPV CLOSURE HEAD WASHER	VT-1	3	006-112
B6.10	1B13-G8-N	RPV CLOSURE HEAD NUT	VT-1	3	006-112
B6.20	1B13-G8-S	RPV CLOSURE HEAD STUD	UT	3	006-112
B6.40	1B13-G8-T	RPV SHELL, THREADS IN FLANGE AREA	UT	3	006-112
B6.50	1B13-G8-W	RPV CLOSURE HEAD WASHER	VT-1	3	006-112

ITEM NO.	MARK NO.	COMPONENT DESCRIPTION	EXAM METHOD	PERIOD SCHED.	ISI ISO SS-305-
		EXAMINATION CATEGORY: B-G-1 (Code Case N-652-1)			
B6.10	1B13-G9-N	RPV CLOSURE HEAD NUT	VT-1	3	006-112
B6.20	1B13-G9-S	RPV CLOSURE HEAD STUD	UT	3	006-112
B6.40	1B13-G9-T	RPV SHELL, THREADS IN FLANGE AREA	UT	3	006-112
B6.50	1B13-G9-W	RPV CLOSURE HEAD WASHER	VT-1	3	006-112
B6.10	1B13-H1-N	RPV CLOSURE HEAD NUT	VT-1	3	006-112
B6.20	1B13-H1-S	RPV CLOSURE HEAD STUD	UT	3	006-112
B6.40	1B13-H1-T	RPV SHELL, THREADS IN FLANGE AREA	UT	3	006-112
B6.50	1B13-H1-W	RPV CLOSURE HEAD WASHER	VT-1	3	006-112
B6.10	1B13-H2-N	RPV CLOSURE HEAD NUT	VT-1	3	006-112
B6.20	1B13-H2-S	RPV CLOSURE HEAD STUD	UT	3	006-112
B6.40	1B13-H2-T	RPV SHELL, THREADS IN FLANGE AREA	UT	3	006-112
B6.50	1B13-H2-W	RPV CLOSURE HEAD WASHER	VT-1	3	006-112
B6.10	1B13-H3-N	RPV CLOSURE HEAD NUT	VT-1	3	006-112
B6.20	1B13-H3-S	RPV CLOSURE HEAD STUD	UT	3	006-112
B6.40	1B13-H3-T	RPV SHELL, THREADS IN FLANGE AREA	UT	3	006-112
B6.50	1B13-H3-W	RPV CLOSURE HEAD WASHER	VT-1	3	006-112
B6.10	1B13-H4-N	RPV CLOSURE HEAD NUT	VT-1	3	006-112
B6.20	1B13-H4-S	RPV CLOSURE HEAD STUD	UT	3	006-112
B6.40	1B13-H4-T	RPV SHELL, THREADS IN FLANGE AREA	UT	3	006-112
B6.50	1B13-H4-W	RPV CLOSURE HEAD WASHER	VT-1	3	006-112
B6.10	1B13-H5-N	RPV CLOSURE HEAD NUT	VT-1	3	006-112
B6.20	1B13-H5-S	RPV CLOSURE HEAD STUD	UT	3	006-112
B6.40	1B13-H5-T	RPV SHELL, THREADS IN FLANGE AREA	UT	3	006-112
B6.50	1B13-H5-W	RPV CLOSURE HEAD WASHER	VT-1	3	006-112
B6.10	1B13-H6-N	RPV CLOSURE HEAD NUT	VT-1	3	006-112
B6.20	1B13-H6-S	RPV CLOSURE HEAD STUD	UT	3	006-112
B6.40	1B13-H6-T	RPV SHELL, THREADS IN FLANGE AREA	UT	3	006-112
B6.50	1B13-H6-W	RPV CLOSURE HEAD WASHER	VT-1	3	006-112
B6.10	1B13-H7-N	RPV CLOSURE HEAD NUT	VT-1	3	006-112
B6.20	1B13-H7-S	RPV CLOSURE HEAD STUD	UT	3	006-112
B6.40	1B13-H7-T	RPV SHELL, THREADS IN FLANGE AREA	UT	3	006-112
B6.50	1B13-H7-W	RPV CLOSURE HEAD WASHER	VT-1	3	006-112

ITEM NO.	MARK NO.	COMPONENT DESCRIPTION	EXAM METHOD	PERIOD SCHED.	ISI ISO SS-305-
		EXAMINATION CATEGORY: B-G-1 (Code Case N-652-1)			
B6.10	1B13-H8-N	RPV CLOSURE HEAD NUT	VT-1	3	006-112
B6.20	1B13-H8-S	RPV CLOSURE HEAD STUD	UT	3	006-112
B6.40	1B13-H8-T	RPV SHELL, THREADS IN FLANGE AREA	UT	3	006-112
B6.50	1B13-H8-W	RPV CLOSURE HEAD WASHER	VT-1	3	006-112
B6.10	1B13-H9-N	RPV CLOSURE HEAD NUT	VT-1	3	006-112
B6.20	1B13-H9-S	RPV CLOSURE HEAD STUD	UT	3	006-112
B6.40	1B13-H9-T	RPV SHELL, THREADS IN FLANGE AREA	UT	3	006-112
B6.50	1B13-H9-W	RPV CLOSURE HEAD WASHER	VT-1	3	006-112
B6.60 TO B6.110		NOT APPLICABLE TO BWRS			
B6.120		NONE AT PNPP			
B6.130		NONE AT PNPP			
B6.140		NONE AT PNPP			
B6.150		NONE AT PNPP			
B6.160		NONE AT PNPP			
B6.170		NONE AT PNPP			
B6.180	1B33-C001A-1B	PUMP BOLTING	UT	NS	602-105
B6.200	1B33-C001A-1N	NUT	VT-1	NS	602-105
B6.180	1B33-C001A-2B	PUMP BOLTING	UT	NS	602-105
B6.200	1B33-C001A-2N	NUT	VT-1	NS	602-105
B6.180	1B33-C001A-3B	PUMP BOLTING	UT	NS	602-105
B6.200	1B33-C001A-3N	NUT	VT-1	NS	602-105
B6.180	1B33-C001A-4B	PUMP BOLTING	UT	NS	602-105
B6.200	1B33-C001A-4N	NUT	VT-1	NS	602-105
B6.180	1B33-C001A-5B	PUMP BOLTING	UT	NS	602-105
B6.200	1B33-C001A-5N	NUT	VT-1	NS	602-105
B6.180	1B33-C001A-6B	PUMP BOLTING	UT	NS	602-105
B6.200	1B33-C001A-6N	NUT	VT-1	NS	602-105
B6.180	1B33-C001A-7B	PUMP BOLTING	UT	NS	602-105
B6.200	1B33-C001A-7N	NUT	VT-1	NS	602-105
B6.180	1B33-C001A-8B	PUMP BOLTING	UT	NS	602-105
B6.200	1B33-C001A-8N	NUT	VT-1	NS	602-105
B6.180	1B33-C001A-9B	PUMP BOLTING	UT	NS	602-105
B6.200	1B33-C001A-9N	NUT	VT-1	NS	602-105

ITEM NO.	MARK NO.	COMPONENT DESCRIPTION	EXAM METHOD	PERIOD SCHED.	ISI ISO SS-305-
		EXAMINATION CATEGORY: B-G-1 (Code Case N-652-1)			
B6.180	1B33-C001A-10B	PUMP BOLTING	UT	NS	602-105
B6.200	1B33-C001A-10N	NUT	VT-1	NS	602-105
B6.180	1B33-C001A-11B	PUMP BOLTING	UT	NS	602-105
B6.200	1B33-C001A-11N	NUT	VT-1	NS	602-105
B6.180	1B33-C001A-12B	PUMP BOLTING	UT	NS	602-105
B6.200	1B33-C001A-12N	NUT	VT-1	NS	602-105
B6.180	1B33-C001A-13B	PUMP BOLTING	UT	NS	602-105
B6.200	1B33-C001A-13N	NUT	VT-1	NS	602-105
B6.180	1B33-C001A-14B	PUMP BOLTING	UT	NS	602-105
B6.200	1B33-C001A-14N	NUT	VT-1	NS	602-105
B6.180	1B33-C001A-15B	PUMP BOLTING	UT	NS	602-105
B6.200	1B33-C001A-15N	NUT	VT-1	NS	602-105
B6.180	1B33-C001A-16B	PUMP BOLTING	UT	NS	602-105
B6.200	1B33-C001A-16N	NUT	VT-1	NS	602-105
B6.190	1B33-C001A-FLG	FLANGE SURFACE WHEN DISASSEMBLED	VT-1	SR	602-105
B6.180	1B33-C001B-1B	PUMP BOLTING	UT	3	602-105
B6.200	1B33-C001B-1N	NUT	VT-1	3	602-105
B6.180	1B33-C001B-2B	PUMP BOLTING	UT	3	602-105
B6.200	1B33-C001B-2N	NUT	VT-1	3	602-105
B6.180	1B33-C001B-3B	PUMP BOLTING	UT	3	602-105
B6.200	1B33-C001B-3N	NUT	VT-1	3	602-105
B6.180	1B33-C001B-4B	PUMP BOLTING	UT	3	602-105
B6.200	1B33-C001B-4N	NUT	VT-1	3	602-105
B6.180	1B33-C001B-5B	PUMP BOLTING	UT	3	602-105
B6.200	1B33-C001B-5N	NUT	VT-1	3	602-105
B6.180	1B33-C001B-6B	PUMP BOLTING	UT	3	602-105
B6.200	1B33-C001B-6N	NUT	VT-1	3	602-105
B6.180	1B33-C001B-7B	PUMP BOLTING	UT	3	602-105
B6.200	1B33-C001B-7N	NUT	VT-1	3	602-105
B6.180	1B33-C001B-8B	PUMP BOLTING	UT	3	602-105
B6.200	1B33-C001B-8N	NUT	VT-1	3	602-105
B6.180	1B33-C001B-9B	PUMP BOLTING	UT	3	602-105
B6.200	1B33-C001B-9N	NUT	VT-1	3	602-105
B6.180	1B33-C001B-10B	PUMP BOLTING	UT	3	602-105
B6.200	1B33-C001B-10N	NUT	VT-1	3	602-105
B6.180	1B33-C001B-11B	PUMP BOLTING	UT	3	602-105
B6.200	1B33-C001B-11N	NUT	VT-1	3	602-105

ITEM NO.	MARK NO.	COMPONENT DESCRIPTION	EXAM METHOD	PERIOD SCHED.	ISI ISO SS-305-
		EXAMINATION CATEGORY: B-G-1 (Code Case N-652-1)			
B6.180	1B33-C001B-12B	PUMP BOLTING	UT	3	602-105
B6.200	1B33-C001B-12N	NUT	VT-1	3	602-105
B6.180	1B33-C001B-13B	PUMP BOLTING	UT	3	602-105
B6.200	1B33-C001B-13N	NUT	VT-1	3	602-105
B6.180	1B33-C001B-14B	PUMP BOLTING	UT	3	602-105
B6.200	1B33-C001B-14N	NUT	VT-1	3	602-105
B6.180	1B33-C001B-15B	PUMP BOLTING	UT	3	602-105
B6.200	1B33-C001B-15N	NUT	VT-1	3	602-105
B6.180	1B33-C001B-16B	PUMP BOLTING	UT	3	602-105
B6.200	1B33-C001B-16N	NUT	VT-1	3	602-105
B6.190	1B33-C001B-FLG	FLANGE SURFACE WHEN DISASSEMBLED	VT-1	SR	602-105
B6.210	1B21-F022A-1B	MSIV STUD	UT	NS	605-101
B6.210	1B21-F022A-2B	MSIV STUD	UT	NS	605-101
B6.210	1B21-F022A-3B	MSIV STUD	UT	NS	605-101
B6.210	1B21-F022A-4B	MSIV STUD	UT	NS	605-101
B6.210	1B21-F022A-5B	MSIV STUD	UT	NS	605-101
B6.210	1B21-F022A-6B	MSIV STUD	UT	NS	605-101
B6.210	1B21-F022A-7B	MSIV STUD	UT	NS	605-101
B6.210	1B21-F022A-8B	MSIV STUD	UT	NS	605-101
B6.210	1B21-F022A-9B	MSIV STUD	UT	NS	605-101
B6.210	1B21-F022A-10B	MSIV STUD	UT	NS	605-101
B6.210	1B21-F022A-11B	MSIV STUD	UT	NS	605-101
B6.210	1B21-F022A-12B	MSIV STUD	UT	NS	605-101
B6.210	1B21-F022A-13B	MSIV STUD	UT	NS	605-101
B6.210	1B21-F022A-14B	MSIV STUD	UT	NS	605-101
B6.210	1B21-F022A-15B	MSIV STUD	UT	NS	605-101
B6.210	1B21-F022A-16B	MSIV STUD	UT	NS	605-101
B6.210	1B21-F022A-17B	MSIV STUD	UT	NS	605-101
B6.210	1B21-F022A-18B	MSIV STUD	UT	NS	605-101
B6.220	1B21-F022A-FLG	MSIV FLANGE SURFACE	VT-1	SR	605-101
B6.230	1B21-F022A-N	MSIV NUTS AND WASHERS, 18 EACH	VT-1	NS	605-101
B6.210	1B21-F022B-1B	MSIV STUD	UT	NS	605-102
B6.210	1B21-F022B-2B	MSIV STUD	UT	NS	605-102
B6.210	1B21-F022B-3B	MSIV STUD	UT	NS	605-102
B6.210	1B21-F022B-4B	MSIV STUD	UT	NS	605-102
B6.210	1B21-F022B-5B	MSIV STUD	UT	NS	605-102
B6.210	1B21-F022B-6B	MSIV STUD	UT	NS	605-102

ITEM NO.	MARK NO.	COMPONENT DESCRIPTION	EXAM METHOD	PERIOD SCHED.	ISI ISO SS-305-
		EXAMINATION CATEGORY: B-G-1 (Code Case N-652-1)			
B6.210	1B21-F022B-7B	MSIV STUD	UT	NS	605-102
B6.210	1B21-F022B-8B	MSIV STUD	UT	NS	605-102
B6.210	1B21-F022B-9B	MSIV STUD	UT	NS	605-102
B6.210	1B21-F022B-10B	MSIV STUD	UT	NS	605-102
B6.210	1B21-F022B-11B	MSIV STUD	UT	NS	605-102
B6.210	1B21-F022B-12B	MSIV STUD	UT	NS	605-102
B6.210	1B21-F022B-13B	MSIV STUD	UT	NS	605-102
B6.210	1B21-F022B-14B	MSIV STUD	UT	NS	605-102
B6.210	1B21-F022B-15B	MSIV STUD	UT	NS	605-102
B6.210	1B21-F022B-16B	MSIV STUD	UT	NS	605-102
B6.210	1B21-F022B-17B	MSIV STUD	UT	NS	605-102
B6.210	1B21-F022B-18B	MSIV STUD	UT	NS	605-102
B6.220	1B21-F022B-FLG	MSIV FLANGE SURFACE	VT-1	SR	605-102
B6.230	1B21-F022B-N	MSIV NUTS AND WASHERS, 18 EACH	VT-1	NS	605-102
B6.210	1B21-F022C-1B	MSIV STUD	UT	NS	605-103
B6.210	1B21-F022C-2B	MSIV STUD	UT	NS	605-103
B6.210	1B21-F022C-3B	MSIV STUD	UT	NS	605-103
B6.210	1B21-F022C-4B	MSIV STUD	UT	NS	605-103
B6.210	1B21-F022C-5B	MSIV STUD	UT	NS	605-103
B6.210	1B21-F022C-6B	MSIV STUD	UT	NS	605-103
B6.210	1B21-F022C-7B	MSIV STUD	UT	NS	605-103
B6.210	1B21-F022C-8B	MSIV STUD	UT	NS	605-103
B6.210	1B21-F022C-9B	MSIV STUD	UT	NS	605-103
B6.210	1B21-F022C-10B	MSIV STUD	UT	NS	605-103
B6.210	1B21-F022C-11B	MSIV STUD	UT	NS	605-103
B6.210	1B21-F022C-12B	MSIV STUD	UT	NS	605-103
B6.210	1B21-F022C-13B	MSIV STUD	UT	NS	605-103
B6.210	1B21-F022C-14B	MSIV STUD	UT	NS	605-103
B6.210	1B21-F022C-15B	MSIV STUD	UT	NS	605-103
B6.210	1B21-F022C-16B	MSIV STUD	UT	NS	605-103
B6.210	1B21-F022C-17B	MSIV STUD	UT	NS	605-103
B6.210	1B21-F022C-18B	MSIV STUD	UT	NS	605-103
B6.220	1B21-F022C-FLG	MSIV FLANGE SURFACE	VT-1	SR	605-103
B6.230	1B21-F022C-N	MSIV NUTS AND WASHERS, 18 EACH	VT-1	NS	605-103

ITEM NO.	MARK NO.	COMPONENT DESCRIPTION	EXAM METHOD	PERIOD SCHED.	ISI ISO SS-305-
		EXAMINATION CATEGORY: B-G-1 (Code Case N-652-1)			
B6.210	1B21-F022D-1B	MSIV STUD	UT	NS	605-104
B6.210	1B21-F022D-2B	MSIV STUD	UT	NS	605-104
B6.210	1B21-F022D-3B	MSIV STUD	UT	NS	605-104
B6.210	1B21-F022D-4B	MSIV STUD	UT	NS	605-104
B6.210	1B21-F022D-5B	MSIV STUD	UT	NS	605-104
B6.210	1B21-F022D-6B	MSIV STUD	UT	NS	605-104
B6.210	1B21-F022D-7B	MSIV STUD	UT	NS	605-104
B6.210	1B21-F022D-8B	MSIV STUD	UT	NS	605-104
B6.210	1B21-F022D-9B	MSIV STUD	UT	NS	605-104
B6.210	1B21-F022D-10B	MSIV STUD	UT	NS	605-104
B6.210	1B21-F022D-11B	MSIV STUD	UT	NS	605-104
B6.210	1B21-F022D-12B	MSIV STUD	UT	NS	605-104
B6.210	1B21-F022D-13B	MSIV STUD	UT	NS	605-104
B6.210	1B21-F022D-14B	MSIV STUD	UT	NS	605-104
B6.210	1B21-F022D-15B	MSIV STUD	UT	NS	605-104
B6.210	1B21-F022D-16B	MSIV STUD	UT	NS	605-104
B6.210	1B21-F022D-17B	MSIV STUD	UT	NS	605-104
B6.210	1B21-F022D-18B	MSIV STUD	UT	NS	605-104
B6.220	1B21-F022D-FLG	MSIV FLANGE SURFACE	VT-1	SR	605-104
B6.230	1B21-F022D-N	MSIV NUT AND WASHERS, 18 EACH	VT-1	NS	605-104
B6.210	1B21-F028A-1B	MSIV STUD	UT	1	605-111
B6.210	1B21-F028A-2B	MSIV STUD	UT	1	605-111
B6.210	1B21-F028A-3B	MSIV STUD	UT	1	605-111
B6.210	1B21-F028A-4B	MSIV STUD	UT	1	605-111
B6.210	1B21-F028A-5B	MSIV STUD	UT	1	605-111
B6.210	1B21-F028A-6B	MSIV STUD	UT	1	605-111
B6.210	1B21-F028A-7B	MSIV STUD	UT	2	605-111
B6.210	1B21-F028A-8B	MSIV STUD	UT	2	605-111
B6.210	1B21-F028A-9B	MSIV STUD	UT	2	605-111
B6.210	1B21-F028A-10B	MSIV STUD	UT	2	605-111
B6.210	1B21-F028A-11B	MSIV STUD	UT	2	605-111
B6.210	1B21-F028A-12B	MSIV STUD	UT	2	605-111
B6.210	1B21-F028A-13B	MSIV STUD	UT	3	605-111
B6.210	1B21-F028A-14B	MSIV STUD	UT	3	605-111
B6.210	1B21-F028A-15B	MSIV STUD	UT	3	605-111
B6.210	1B21-F028A-16B	MSIV STUD	UT	3	605-111
B6.210	1B21-F028A-17B	MSIV STUD	UT	3	605-111
B6.210	1B21-F028A-18B	MSIV STUD	UT	3	605-111

ITEM NO.	MARK NO.	COMPONENT DESCRIPTION	EXAM METHOD	PERIOD SCHED.	ISI ISO SS-305-
		EXAMINATION CATEGORY: B-G-1 (Code Case N-652-1)			
B6.220	1B21-F028A-FLG	MSIV FLANGE SURFACE	VT-1	SR	605-111
B6-230	1B21-F028A-N	MSIV NUTS AND WASHERS, 18 EACH	VT-1	1	605-111
B6.210	1B21-F028B-1B	MSIV STUD	UT	NS	605-108
B6.210	1B21-F028B-2B	MSIV STUD	UT	NS	605-108
B6.210	1B21-F028B-3B	MSIV STUD	UT	NS	605-108
B6.210	1B21-F028B-4B	MSIV STUD	UT	NS	605-108
B6.210	1B21-F028B-5B	MSIV STUD	UT	NS	605-108
B6.210	1B21-F028B-6B	MSIV STUD	UT	NS	605-108
B6.210	1B21-F028B-7B	MSIV STUD	UT	NS	605-108
B6.210	1B21-F028B-8B	MSIV STUD	UT	NS	605-108
B6.210	1B21-F028B-9B	MSIV STUD	UT	NS	605-108
B6.210	1B21-F028B-10B	MSIV STUD	UT	NS	605-108
B6.210	1B21-F028B-11B	MSIV STUD	UT	NS	605-108
B6.210	1B21-F028B-12B	MSIV STUD	UT	NS	605-108
B6.210	1B21-F028B-13B	MSIV STUD	UT	NS	605-108
B6.210	1B21-F028B-14B	MSIV STUD	UT	NS	605-108
B6.210	1B21-F028B-15B	MSIV STUD	UT	NS	605-108
B6.210	1B21-F028B-16B	MSIV STUD	UT	NS	605-108
B6.210	1B21-F028B-17B	MSIV STUD	UT	NS	605-108
B6.210	1B21-F028B-18B	MSIV STUD	UT	NS	605-108
B6.220	1B21-F028B-FLG	MSIV FLANGE SURFACE	VT-1	SR	605-108
B6.230	1B21-F028B-N	MSIV NUTS AND WASHERS, 18 EACH	VT-1	NS	605-108
B6.210	1B21-F028C-1B	MSIV STUD	UT	NS	605-109
B6.210	1B21-F028C-2B	MSIV STUD	UT	NS	605-109
B6.210	1B21-F028C-3B	MSIV STUD	UT	NS	605-109
B6.210	1B21-F028C-4B	MSIV STUD	UT	NS	605-109
B6.210	1B21-F028C-5B	MSIV STUD	UT	NS	605-109
B6.210	1B21-F028C-6B	MSIV STUD	UT	NS	605-109
B6.210	1B21-F028C-7B	MSIV STUD	UT	NS	605-109
B6.210	1B21-F028C-8B	MSIV STUD	UT	NS	605-109
B6.210	1B21-F028C-9B	MSIV STUD	UT	NS	605-109
B6.210	1B21-F028C-10B	MSIV STUD	UT	NS	605-109
B6.210	1B21-F028C-11B	MSIV STUD	UT	NS	605-109
B6.210	1B21-F028C-12B	MSIV STUD	UT	NS	605-109
B6.210	1B21-F028C-13B	MSIV STUD	UT	NS	605-109
B6.210	1B21-F028C-14B	MSIV STUD	UT	NS	605-109

ITEM NO.	MARK NO.	COMPONENT DESCRIPTION	EXAM METHOD	PERIOD SCHED.	ISI ISO SS-305-
		EXAMINATION CATEGORY: B-G-1 (Code Case N-652-1)			
B6.210	1B21-F028C-15B	MSIV STUD	UT	NS	605-109
B6.210	1B21-F028C-16B	MSIV STUD	UT	NS	605-109
B6.210	1B21-F028C-17B	MSIV STUD	UT	NS	605-109
B6.210	1B21-F028C-18B	MSIV STUD	UT	NS	605-109
B6.220	1B21-F028C-FLG	MSIV FLANGE SURFACE	VT-1	SR	605-109
B6.230	1B21-F028C-N	MSIV NUTS AND WASHERS, 18 EACH	VT-1	NS	605-109
B6.210	1B21-F028D-1B	MSIV STUD	UT	NS	605-110
B6.210	1B21-F028D-2B	MSIV STUD	UT	NS	605-110
B6.210	1B21-F028D-3B	MSIV STUD	UT	NS	605-110
B6.210	1B21-F028D-4B	MSIV STUD	UT	NS	605-110
B6.210	1B21-F028D-5B	MSIV STUD	UT	NS	605-110
B6.210	1B21-F028D-6B	MSIV STUD	UT	NS	605-110
B6.210	1B21-F028D-7B	MSIV STUD	UT	NS	605-110
B6.210	1B21-F028D-8B	MSIV STUD	UT	NS	605-110
B6.210	1B21-F028D-9B	MSIV STUD	UT	NS	605-110
B6.210	1B21-F028D-10B	MSIV STUD	UT	NS	605-110
B6.210	1B21-F028D-11B	MSIV STUD	UT	NS	605-110
B6.210	1B21-F028D-12B	MSIV STUD	UT	NS	605-110
B6.210	1B21-F028D-13B	MSIV STUD	UT	NS	605-110
B6.210	1B21-F028D-14B	MSIV STUD	UT	NS	605-110
B6.210	1B21-F028D-15B	MSIV STUD	UT	NS	605-110
B6.210	1B21-F028D-16B	MSIV STUD	UT	NS	605-110
B6.210	1B21-F028D-17B	MSIV STUD	UT	NS	605-110
B6.210	1B21-F028D-18B	MSIV STUD	UT	NS	605-110
B6.220	1B21-F028D-FLG	MSIV FLANGE SURFACE	VT-1	SR	605-110
B6.230	1B21-F028D-N	MSIV NUTS AND WASHERS, 18 EACH	VT-1	NS	605-110

** Studs D1 through D6 are removed every refueling outage.

ITEM NO.	MARK NO.	COMPONENT DESCRIPTION	EXAM METHOD	PERIOD SCHED.	ISI ISO SS-305-
		EXAMINATION CATEGORY: B-G-2 (Code Case N-652-1)			
B7.10	1B13-N7-B	N7 RPV HEAD SPARE NOZZLE BOLTING	VT-1	NS	006-103
B7.10	1B13-N8-B	N8 RPV HEAD SPRAY NOZZLE BOLTING	VT-1	SR*	006-103
B7.10	1B13-N16-B	N16 VIBRATION NOZZLE BOLTING	VT-1	NS	006-105
B7.20		NO BOLTING			
B7.30		NO BOLTING			
B7.40		NO BOLTING			
B7.50	1B21-F041A-B	SRV BOLTING, 12 EACH	VT-1	SR+	605-101
B7.50	1B21-F041B-B	SRV BOLTING, 12 EACH	VT-1	NS+	605-102
B7.50	1B21-F041C-B	SRV BOLTING, 12 EACH	VT-1	NS+	605-103
B7.50	1B21-F041D-B	SRV BOLTING, 12 EACH	VT-1	NS+	605-104
B7.50	1B21-F041E-B	SRV BOLTING, 12 EACH	VT-1	NS+	605-101
B7.50	1B21-F041F-B	SRV BOLTING, 12 EACH	VT-1	NS+	605-102
B7.50	1B21-F041G-B	SRV BOLTING, 12 EACH	VT-1	NS+	605-103
B7.50	1B21-F041K-B	SRV BOLTING, 12 EACH	VT-1	NS+	605-102
B7.50	1B21-F047B-B	SRV BOLTING, 12 EACH	VT-1	NS+	605-102
B7.50	1B21-F047C-B	SRV BOLTING, 12 EACH	VT-1	NS+	605-103
B7.50	1B21-F047D-B	SRV BOLTING, 12 EACH	VT-1	NS+	605-104
B7.50	1B21-F047F-B	SRV BOLTING, 12 EACH	VT-1	NS+	605-102
B7.50	1B21-F047G-B	SRV BOLTING, 12 EACH	VT-1	NS+	605-103
B7.50	1B21-F047H-B	SRV BOLTING, 12 EACH	VT-1	NS+	605-104
B7.50	1B21-F051A-B	SRV BOLTING, 12 EACH	VT-1	NS+	605-101
B7.50	1B21-F051B-B	SRV BOLTING, 12 EACH	VT-1	NS+	605-102
B7.50	1B21-F051C-B	SRV BOLTING, 12 EACH	VT-1	NS+	605-103
B7.50	1B21-F051D-B	SRV BOLTING, 12 EACH	VT-1	NS+	605-104
B7.50	1B21-F051G-B	SRV BOLTING, 12 EACH	VT-1	NS+	605-103
B7.50	1B21-0168-B	HEAD VENT/POOL FLOOR FLANGE CONNECTION BOLTING	VT-1	SR*	605-106
B7.50	1B21-0186-B	FLANGE BOLTING AT RPV HEAD VENT CONN TO HEAD SPRAY TEE	VT-1	SR**	605-105
B7.50	1B33-0010-B	BLANK FLANGE DECON CONNECTION	VT-1	SR++	602-102
B7.50	1B33-0017-B	BLANK FLANGE DECON CONNECTION	VT-1	SR++	602-102
B7.50	1B33-0072-B	BLANK FLANGE DECON CONNECTION	VT-1	SR++	602-104
B7.50	1B33-0079-B	BLANK FLANGE DECON CONNECTION	VT-1	SR++	602-104
B7.50	1E51-0001-B	FLANGE BOLTING	VT-1	SR**	631-108
B7.50	1E51-0009-B	FLANGE BOLTING	VT-1	SR*	631-108

ITEM NO.	MARK NO.	COMPONENT DESCRIPTION	EXAM METHOD	PERIOD SCHED.	ISI ISO SS-305-
		EXAMINATION CATEGORY: B-G-2 (Code Case N-652-1)			
B7.70	1B33-F023A-B	22" VALVE BOLTING	VT-1	SR**	602-102
B7.70	1B33-F023B-B	22" VALVE BOLTING	VT-1	SR**	602-104
B7.70	1B33-F060A-B	24" VALVE BOLTING	VT-1	SR**	602-102
B7.70	1B33-F060B-B	24" VALVE BOLTING	VT-1	SR**	602-104
B7.70	1B33-F067A-B	24" VALVE BOLTING	VT-1	SR**	602-102
B7.70	1B33-F067B-B	24" VALVE BOLTING	VT-1	SR**	602-104
B7.70	1E22-F0004-B	12" VALVE BOLTING	VT-1	SR**	701-108
B7.80	Deleted with incorporation of Code Case N-652-1				

* These bolted connections are disassembled every outage. The bolting needs to be examined when the connection is disassembled or the bolting is removed and need only be examined once during the interval.

\+ The SRV bolted connections are disassembled on the SRV replacement schedule. Only one among similar needs to be examined, so 1B21-F041A-B is designated as the scheduled bolted connection . The bolting needs to be examined when the connection is disassembled or the bolting is removed and need only be examined once during the interval.

** Bolted connections that are not routinely disassembled. The bolting only needs to be examined if the connection is disassembled or the bolting is removed, and need only be examined once during the interval.

++ Bolted piping connections that are similar and are not routinely disassembled. The bolting of only one among these similar connections needs to be examined if a connection is disassembled or the bolting is removed and need only be examined once during the interval.

ITEM NO.	MARK NO.	COMPONENT DESCRIPTION	EXAM METHOD	PERIOD SCHED.	ISI ISO SS-305-
		EXAMINATION CATEGORY: R-A[1] (Code Case N-578; Formerly B-J)			
R2.11	1B13-0001	RPV VENT & HEAD SPRAY TEE, FLANGE TO TEE	UT	3	631-108
R3.ND	1B13-0002	RPV VENT & HEAD SPRAY TEE, TEE TO ECCENTRIC REDUCER	UT	NS	631-108
R3.ND	1B13-0003	RPV VENT & HEAD SPRAY TEE, ECCENTRIC REDUCER TO FLANGE	UT	NS	631-108
R3.ND	1B13-0004	RPV VENT & HEAD SPRAY TEE, TEE TO FLANGE AT N8 CONNECTION	UT	NS	631-108
R3.ND	1B13-N9A-KC	JET PUMP INSTRUMENTATION NOZZLE N9A SAFE-END TO PENETRATION SEAL	UT	R16*	006-106
R3.ND	1B13-N9B-KC	JET PUMP INSTRUMENTATION NOZZLE N9B SAFE-END TO PENETRATION SEAL	UT	R16*	006-106
R3.ND	1B13-N10-KC	CRD RETURN NOZZLE SAFE-END TO CAP	MT	NS	006-106
R3.ND	1B21-0001	NOZZLE N3C SAFE-END TO 26" PIPE	UT	NS	605-103
R3.LS	1B21-0001-D	26" PIPE SEAM, DOWNSTREAM	UT	NS	605-103
R3.ND	1B21-0002	26" PIPE TO ELBOW	UT	NS	605-103
R3.LS	1B21-0002-U	26" PIPE SEAM, UPSTREAM	UT	NS	605-103
R3.LS	1B21-0002-D	26" ELBOW SEAM, DOWNSTREAM	UT	NS	605-103
R3.ND	1B21-0003	26" ELBOW TO PIPE	UT	NS	605-103
R3.LS	1B21-0003-D	26" PIPE SEAM, DOWNSTREAM	UT	NS	605-103
R3.LS	1B21-0003-U	26" ELBOW SEAM, UPSTREAM	UT	NS	605-103
R3.ND	1B21-0004	26" PIPE TO 30° PIPE BEND	UT	NS	605-103
R3.LS	1B21-0004-U	26" PIPE SEAM, UPSTREAM	UT	NS	605-103
R3.LS	1B21-0004-D	26" PIPE SEAM, DOWNSTREAM	UT	NS	605-103
R3.ND	1B21-0005	26" PIPE TO ELBOW	UT	NS	605-103
R3.LS	1B21-0005-U	26" PIPE SEAM, UPSTREAM	UT	NS	605-103
R3.LS	1B21-0005-D	26" ELBOW SEAM, DOWNSTREAM	UT	NS	605-103
R3.ND	1B21-0006	26" PIPE TO ELBOW	UT	NS	605-103
R3.LS	1B21-0006-U	26" ELBOW SEAM, UPSTREAM	UT	NS	605-103
R3.LS	1B21-0006-D	26" PIPE SEAM, DOWNSTREAM	UT	NS	605-103
R3.ND	1B21-0007	26" PIPE TO 26" X 10" CONTOUR NOZZLE	UT	NS	605-103
R3.ND	1B21-0008	26" PIPE TO 26" X 10" CONTOUR NOZZLE	UT	NS	605-103
R3.ND	1B21-0009	26" PIPE TO 26" X 10" CONTOUR NOZZLE	UT	NS	605-103
R3.ND	1B21-0010	26" PIPE TO 26" X 10" CONTOUR NOZZLE	UT	NS	605-103
R3.ND	1B21-0011	26" PIPE TO 26" X 10" CONTOUR NOZZLE	UT	NS	605-103
R3.ND	1B21-0012	26" PIPE TO 26" X 10" CONTOUR NOZZLE	UT	NS	605-103
R3.ND	1B21-0013	26" PIPE TO ELBOW	UT	NS	605-103
R3.LS	1B21-0013-U	26" PIPE SEAM, UPSTREAM	UT	NS	605-103
R3.LS	1B21-0013-D1	26" ELBOW SHORT SEAM, DOWNSTREAM	UT	NS	605-103
R3.LS	1B21-0013-D2	26" ELBOW LONG SEAM, DOWNSTREAM	UT	NS	605-103
R3.ND	1B21-0013A	26" PIPE TO PIPE	UT	NS	605-103
R3.LS	1B21-0013A-U	26" PIPE SEAM, UPSTREAM	UT	NS	605-103

ITEM NO.	MARK NO.	COMPONENT DESCRIPTION	EXAM METHOD	PERIOD SCHED.	ISI ISO SS-305-
		EXAMINATION CATEGORY: R-A[1] (CODE CASE N-578; FORMERLY B-J)			
R3.LS	1B21-0013A-D	26" PIPE SEAM, DOWNSTREAM	UT	NS	605-103
R3.ND	1B21-0014	26" ELBOW TO VALVE B21-F022C	UT	NS	605-103
R3.LS	1B21-0014-U1	26" ELBOW SHORT SEAM, UPSTREAM	UT	NS	605-103
R3.LS	1B21-0014-U2	26" ELBOW LONG SEAM, UPSTREAM	UT	NS	605-103
R3.ND	1B21-0015	26" VALVE B21-F022C TO PENETRATION P122 PROCESS PIPE	UT	NS	605-103
R3.ND	1B21-0016	26" PENETRATION P122 PROCESS PIPE TO VALVE B21-F028C	UT	NS	605-109
R3.ND	1B21-0020	10" CONTOUR NOZZLE TO FLANGE	UT	NS	605-103
R3.ND	1B21-0021	10" CONTOUR NOZZLE TO FLANGE	UT	NS	605-103
R3.ND	1B21-0022	10" CONTOUR NOZZLE TO FLANGE	UT	NS	605-103
R3.ND	1B21-0023	10" CONTOUR NOZZLE TO FLANGE	UT	NS	605-103
R3.ND	1B21-0024	10" CONTOUR NOZZLE TO FLANGE	UT	NS	605-103
R3.ND	1B21-0025	10" CONTOUR NOZZLE TO FLANGE	UT	NS	605-103
R3.ND	1B21-0038	NOZZLE N3D SAFE-END TO 26" PIPE	UT	NS	605-104
R3.LS	1B21-0038-D	26" PIPE SEAM, DOWNSTREAM	UT	NS	605-104
R3.ND	1B21-0039	26" PIPE TO ELBOW	UT	NS	605-104
R3.LS	1B21-0039-U	26" PIPE SEAM, UPSTREAM	UT	NS	605-104
R3.LS	1B21-0039-D	26" ELBOW SEAM, DOWNSTREAM	UT	NS	605-104
R3.ND	1B21-0040	26" PIPE TO ELBOW	UT	NS	605-104
R3.LS	1B21-0040-U	26" ELBOW SEAM, UPSTREAM	UT	NS	605-104
R3.LS	1B21-0040-D	26" PIPE SEAM, DOWNSTREAM	UT	NS	605-104
R3.ND	1B21-0041	26" PIPE TO PIPE	UT	NS	605-104
R3.LS	1B21-0041-U	26" PIPE SEAM, UPSTREAM	UT	NS	605-104
R3.LS	1B21-0041-D	26" PIPE SEAM, DOWNSTREAM	UT	NS	605-104
R3.ND	1B21-0042	26" PIPE TO ELBOW	UT	NS	605-104
R3.LS	1B21-0042-U	26" PIPE SEAM, UPSTREAM	UT	NS	605-104
R3.LS	1B21-0042-D	26" ELBOW SEAM, DOWNSTREAM	UT	NS	605-104
R3.ND	1B21-0043	26" ELBOW TO PIPE	UT	NS	605-104
R3.LS	1B21-0043-U	26" ELBOW SEAM, UPSTREAM	UT	NS	605-104
R3.LS	1B21-0043-D	26" PIPE SEAM, DOWNSTREAM	UT	NS	605-104
R3.ND	1B21-0044	26" PIPE TO 26" X 10" CONTOUR NOZZLE	UT	NS	605-104
R3.ND	1B21-0045	26" PIPE TO 26" X 10" CONTOUR NOZZLE	UT	NS	605-104
R3.ND	1B21-0046	26" PIPE TO 26" X 10" CONTOUR NOZZLE	UT	NS	605-104
R3.ND	1B21-0047	26" PIPE TO 26" X 10" CONTOUR NOZZLE	UT	NS	605-104
R3.ND	1B21-0048	26" PIPE TO ELBOW	UT	NS	605-104
R3.LS	1B21-0048-U	26" PIPE SEAM, UPSTREAM	UT	NS	605-104
R3.LS	1B21-0048-D1	26" ELBOW SHORT SEAM, DOWNSTREAM	UT	NS	605-104
R3.LS	1B21-0048-D2	26" ELBOW LONG SEAM, DOWNSTREAM	UT	NS	605-104
R3.ND	1B21-0049	26" ELBOW TO VALVE B21-F022D	UT	NS	605-104
R3.LS	1B21-0049-U1	26" ELBOW SHORT SEAM, UPSTREAM	UT	NS	605-104
R3.LS	1B21-0049-U2	26" ELBOW LONG SEAM, UPSTREAM	UT	NS	605-104

ITEM NO.	MARK NO.	COMPONENT DESCRIPTION	EXAM METHOD	PERIOD SCHED.	ISI ISO SS-305-
		EXAMINATION CATEGORY: R-A[1] (CODE CASE N-578; FORMERLY B-J)			
R3.ND	1B21-0050	26″ VLV B21-F022D TO P415 PROCESS PIPE	UT	NS	605-104
R3.ND	1B21-0051	26″ P415 PROCESS PIPE TO VLV B21-F028D	UT	NS	605-110
R3.ND	1B21-0055	10″ CONTOUR NOZZLE TO FLANGE	UT	NS	605-104
R3.ND	1B21-0056	10″ CONTOUR NOZZLE TO FLANGE	UT	NS	605-104
R3.ND	1B21-0057	10″ CONTOUR NOZZLE TO FLANGE	UT	NS	605-104
R3.ND	1B21-0058	10″ CONTOUR NOZZLE TO FLANGE	UT	NS	605-104
R3.ND	1B21-0078	NOZZLE N3B SAFE-END TO 26″ PIPE	UT	NS	605-102
R3.LS	1B21-0078-D	26″ PIPE SEAM, DOWNSTREAM	UT	NS	605-102
R3.ND	1B21-0079	26″ PIPE TO ELBOW	UT	NS	605-102
R3.LS	1B21-0079-U	26″ PIPE SEAM, UPSTREAM	UT	NS	605-102
R3.LS	1B21-0079-D	26″ ELBOW SEAM, DOWNSTREAM	UT	NS	605-102
R3.ND	1B21-0080	26″ PIPE TO ELBOW	UT	NS	605-102
R3.LS	1B21-0080-U	26″ ELBOW SEAM, UPSTREAM	UT	NS	605-102
R3.LS	1B21-0080-D	26″ PIPE SEAM, DOWNSTREAM	UT	NS	605-102
R3.ND	1B21-0081	26″ PIPE TO PIPE	UT	NS	605-102
R3.LS	1B21-0081-D	26″ PIPE SEAM, DOWNSTREAM	UT	NS	605-102
R3.LS	1B21-0081-U	26″ PIPE SEAM, UPSTREAM	UT	NS	605-102
R3.ND	1B21-0082	26″ PIPE TO ELBOW	UT	NS	605-102
R3.LS	1B21-0082-U	26″ PIPE SEAM, UPSTREAM	UT	NS	605-102
R3.LS	1B21-0082-D	26″ ELBOW SEAM, DOWNSTREAM	UT	NS	605-102
R3.ND	1B21-0083	26″ ELBOW TO PIPE	UT	NS	605-102
R3.LS	1B21-0083-U	26″ ELBOW SEAM, UPSTREAM	UT	NS	605-102
R3.LS	1B21-0083-D	26″ PIPE SEAM, DOWNSTREAM	UT	NS	605-102
R3.ND	1B21-0084	26″ PIPE TO 26″ X 10″ CONTOUR NOZZLE	UT	NS	605-102
R3.ND	1B21-0085	26″ PIPE TO 26″ X 10″ CONTOUR NOZZLE	UT	NS	605-102
R3.ND	1B21-0086	26″ PIPE TO 26″ X 10″ CONTOUR NOZZLE	UT	NS	605-102
R3.ND	1B21-0087	26″ PIPE TO 26″ X 10″ CONTOUR NOZZLE	UT	NS	605-102
R3.ND	1B21-0088	26″ PIPE TO 26″ X 10″ CONTOUR NOZZLE	UT	NS	605-102
R3.ND	1B21-0089	26″ PIPE TO 26″ X 10″ CONTOUR NOZZLE	UT	NS	605-102
R3.ND	1B21-0089A	26″ PIPE TO PIPE	UT	NS	605-102
R3.LS	1B21-0089A-U	26″ PIPE SEAM, UPSTREAM	UT	NS	605-102
R3.LS	1B21-0089A-D	26″ PIPE SEAM, DOWNSTREAM	UT	NS	605-102
R3.ND	1B21-0090	26″ PIPE TO ELBOW	UT	NS	605-102
R3.LS	1B21-0090-U	26″ PIPE SEAM, UPSTREAM	UT	NS	605-102
R3.LS	1B21-0090-D1	26″ ELBOW SHORT SEAM, DOWNSTREAM	UT	NS	605-102
R3.LS	1B21-0090-D2	26″ ELBOW LONG SEAM, DOWNSTREAM	UT	NS	605-102
R3.ND	1B21-0091	26″ ELBOW TO VALVE B21-F022B	UT	NS	605-102
R3.LS	1B21-0091-U1	26″ ELBOW SHORT SEAM, UPSTREAM	UT	NS	605-102
R3.LS	1B21-0091-U2	26″ ELBOW LONG SEAM, UPSTREAM	UT	NS	605-102

ITEM NO.	MARK NO.	COMPONENT DESCRIPTION	EXAM METHOD	PERIOD SCHED.	ISI ISO SS-305-
		EXAMINATION CATEGORY: R-A[1] (CODE CASE N-578; FORMERLY B-J)			
R3.ND	1B21-0092	26″ VLV B21-F022B TO P416 PROCESS PIPE	UT	NS	605-102
R2.ND	1B21-0093	26″ P416 PROCESS PIPE TO VALVE	UT	NS	605-108
R3.ND	1B21-0097	10″ CONTOUR NOZZLE TO FLANGE	UT	NS	605-102
R3.ND	1B21-0098	10″ CONTOUR NOZZLE TO FLANGE	UT	NS	605-102
R3.ND	1B21-0099	10″ CONTOUR NOZZLE TO FLANGE	UT	NS	605-102
R3.ND	1B21-0100	10″ CONTOUR NOZZLE TO FLANGE	UT	NS	605-102
R3.ND	1B21-0101	10″ CONTOUR NOZZLE TO FLANGE	UT	NS	605-102
R3.ND	1B21-0102	10″ CONTOUR NOZZLE TO FLANGE	UT	NS	605-102
R3.ND	1B21-0117	NOZZLE N3A SAFE-END TO 26″ PIPE	UT	NS	605-101
R3.LS	1B21-0117-D	26″ PIPE SEAM, DOWNSTREAM	UT	NS	605-101
R3.ND	1B21-0118	26″ PIPE TO ELBOW	UT	NS	605-101
R3.LS	1B21-0118-U	26″ PIPE SEAM, UPSTREAM	UT	NS	605-101
R3.LS	1B21-0118-D	26″ ELBOW SEAM, DOWNSTREAM	UT	NS	605-101
R3.ND	1B21-0119	26″ PIPE TO ELBOW	UT	NS	605-101
R3.LS	1B21-0119-U	26″ ELBOW SEAM, UPSTREAM	UT	NS	605-101
R3.LS	1B21-0119-D	26″ PIPE SEAM, DOWNSTREAM	UT	NS	605-101
R3.ND	1B21-0120	26″ PIPE TO PIPE	UT	NS	605-101
R3.LS	1B21-0120-U	26″ PIPE SEAM, UPSTREAM	UT	NS	605-101
R3.LS	1B21-0120-D	26″ PIPE SEAM, DOWNSTREAM	UT	NS	605-101
R3.ND	1B21-0120A	26″ PIPE TO 26″ X 10″ CONTOUR NOZZLE	UT	NS	605-101
R3.ND	1B21-0121	26″ PIPE TO ELBOW	UT	NS	605-101
R3.LS	1B21-0121-U	26″ PIPE SEAM, UPSTREAM	UT	NS	605-101
R3.LS	1B21-0121-D	26″ ELBOW SEAM, DOWNSTREAM	UT	NS	605-101
R3.ND	1B21-0122	26″ ELBOW TO PIPE	UT	NS	605-101
R3.LS	1B21-0122-U	26″ ELBOW SEAM, UPSTREAM	UT	NS	605-101
R3.LS	1B21-0122-D	26″ PIPE SEAM, DOWNSTREAM	UT	NS	605-101
R3.ND	1B21-0123	26″ PIPE TO 26″ X 10″ CONTOUR NOZZLE	UT	NS	605-101
R3.ND	1B21-0124	26″ PIPE TO 26″ X 10″ CONTOUR NOZZLE	UT	NS	605-101
R3.ND	1B21-0125	26″ PIPE TO 26″ X 10″ CONTOUR NOZZLE	UT	NS	605-101
R3.ND	1B21-0126	26″ PIPE TO ELBOW	UT	NS	605-101
R3.LS	1B21-0126-U	26″ PIPE SEAM, UPSTREAM	UT	NS	605-101
R3.LS	1B21-0126-D1	26″ ELBOW SHORT SEAM, DOWNSTREAM	UT	NS	605-101
R3.LS	1B21-0126-D2	26″ ELBOW LONG SEAM, DOWNSTREAM	UT	NS	605-101
R3.ND	1B21-0127	26″ ELBOW TO VALVE B21-F022A	UT	NS	605-101
R3.LS	1B21-0127-U1	26″ ELBOW SHORT SEAM, UPSTREAM	UT	NS	605-101
R3.LS	1B21-0127-U2	26″ ELBOW LONG SEAM, UPSTREAM	UT	NS	605-101
R3.ND	1B21-0128	26″ VALVE B21-F022A TO P124 PROCESS PIPE	UT	NS	605-101
R2.ND	1B21-0129	26″ P124 PROCESS PIPE TO VALVE B21-F028A	UT	3	605-107
R3.ND	1B21-0133	10″ CONTOUR NOZZLE TO FLANGE	UT	NS	605-101

ITEM NO.	MARK NO.	COMPONENT DESCRIPTION	EXAM METHOD	PERIOD SCHED.	ISI ISO SS-305-
		EXAMINATION CATEGORY: R-A[1] (CODE CASE N-578; FORMERLY B-J)			
R3.ND	1B21-0134	10" CONTOUR NOZZLE TO FLANGE	UT	NS	605-101
R3.ND	1B21-0135	10" CONTOUR NOZZLE TO FLANGE	UT	NS	605-101
R3.ND	1B21-0148	3" BRANCH CONNECTION TO 26" STEAMLINE	UT	NS	605-106
R3.ND	1B21-0149	3" PIPE TO BRANCH CONNECTION	UT	NS	605-106
R3.ND	1B21-0150	2" X 3" REDUCING ELBOW TO 3" PIPE	UT	NS	605-106
R3.ND	1B21-0151	2" PIPE TO 2" X 3" REDUCING ELBOW	UT	NS	605-106
R3.ND	1B21-0152	2" ELBOW TO PIPE	UT	NS	605-106
R3.ND	1B21-0153	2" PIPE TO ELBOW	UT	NS	605-106
R3.ND	1B21-0154	2" VALVE F005 TO PIPE	UT	NS	605-106
R3.ND	1B21-0155	2" PIPE TO VALVE F005	UT	NS	605-106
R3.ND	1B21-0156	2" ELBOW TO PIPE	UT	NS	605-106
R3.ND	1B21-0157	2" PIPE TO ELBOW	UT	NS	605-106
R3.ND	1B21-0158	2" TEE TO PIPE	UT	NS	605-106
R3.ND	1B21-0159	2" PIPE TO TEE	UT	NS	605-106
R3.ND	1B21-0160	2" ELBOW TO PIPE	UT	NS	605-106
R3.ND	1B21-0161	2" PIPE TO ELBOW	UT	NS	605-106
R3.ND	1B21-0162	2" ELBOW TO PIPE	UT	NS	605-106
R3.ND	1B21-0163	2" PIPE TO ELBOW	UT	NS	605-106
R3.ND	1B21-0164	2" ELBOW TO PIPE	UT	NS	605-106
R3.ND	1B21-0165	2" PIPE TO ELBOW	UT	NS	605-106
R3.ND	1B21-0166	2" ELBOW TO PIPE	UT	NS	605-106
R3.ND	1B21-0167	2" PIPE TO ELBOW (HIGH STRESS & USAGE)	UT	NS	605-106
R3.ND	1B21-0168	2" FLANGE TO PIPE	UT	NS	605-106
R3.ND	1B21-0169	2" PIPE TO FLANGE	UT	NS	605-105
R3.ND	1B21-0170	2" ELBOW TO PIPE	UT	NS	605-105
R3.ND	1B21-0171	2" PIPE TO ELBOW	UT	NS	605-105
R3.ND	1B21-0172	2" ELBOW TO PIPE	UT	NS	605-105
R3.ND	1B21-0173	2" PIPE TO ELBOW	UT	NS	605-105
R3.ND	1B21-0174	2" ELBOW TO PIPE	UT	NS	605-105
R3.ND	1B21-0175	2" PIPE TO ELBOW	UT	NS	605-105
R3.ND	1B21-0176	2" ELBOW TO PIPE	UT	NS	605-105
R3.ND	1B21-0177	2" PIPE TO ELBOW	UT	NS	605-105
R3.ND	1B21-0178	2" ELBOW TO PIPE	UT	NS	605-105
R3.ND	1B21-0179	2" PIPE TO ELBOW	UT	NS	605-105
R3.ND	1B21-0180	2" ELBOW TO PIPE	UT	NS	605-105
R3.ND	1B21-0181	2" X 2" X 1" TEE TO 2" ELBOW	UT	NS	605-105
R3.ND	1B21-0183	2" PIPE TO 2" X 2" X 1" TEE	UT	NS	605-105
R3.ND	1B21-0184	4" X 2" REDUCING ELBOW TO 2" PIPE	UT	NS	605-105
R3.ND	1B21-0185	4" PIPE TO 4" X 2" REDUCING ELBOW	UT	NS	605-105
R3.ND	1B21-0186	4" FLANGE AT B13-D020 TO PIPE	UT	NS	605-105

ITEM NO.	MARK NO.	COMPONENT DESCRIPTION	EXAM METHOD	PERIOD SCHED.	ISI ISO SS-305-
		EXAMINATION CATEGORY: R-A[1] (CODE CASE N-578; FORMERLY B-J)			
R3.ND	1B21-0192	2" TEE TO PIPE	UT	NS	605-106
B9.40	1B21-0193	2" PIPE TO VALVE F002	UT	NS	605-106
B9.40	1B21-0194	2" VALVE F002 TO PIPE	UT	NS	605-106
B9.40	1B21-0195	2" PIPE TO VALVE F001	UT	NS	605-106
R3.ND	1B33-0002	22" NOZZLE N1A SAFE-END TO PIPE (CRC)	UT	NS	602-102
R3.LS	1B33-0002-D	PIPE SEAM, DOWNSTREAM	UT	NS	602-102
R3.ND	1B33-0003	22" PIPE TO ELBOW	UT	2*	602-102
R3.LS	1B33-0003-U	PIPE SEAM, UPSTREAM	UT	2*	602-102
R3.LS	1B33-0003-D1	ELBOW SHORT SEAM, DOWNSTREAM	UT	2*	602-102
R3.LS	1B33-0003-D2	ELBOW LONG SEAM, DOWNSTREAM	UT	2*	602-102
R3.ND	1B33-0003A	22" ELBOW TO PIPE	UT	2*	602-102
R3.LS	1B33-0003A-U1	ELBOW SHORT SEAM, UPSTREAM	UT	2*	602-102
R3.LS	1B33-0003A-U2	ELBOW LONG SEAM, UPSTREAM	UT	2*	602-102
R3.LS	1B33-0003A-D	PIPE SEAM, DOWNSTREAM	UT	2*	602-102
R3.ND	1B33-0004	22" PIPE TO PIPE (CRC)	UT	ND	602-102
R3.LS	1B33-0004-U	PIPE SEAM, UPSTREAM	UT	NS	602-102
R3.LS	1B33-0004-D	PIPE SEAM, DOWNSTREAM	UT	NS	602-102
R3.ND	1B33-0005	22" PIPE TO ELBOW	UT	NS	602-102
R3.LS	1B33-0005-U	PIPE SEAM, UPSTREAM	UT	NS	602-102
R3.LS	1B33-0005-D1	ELBOW SHORT SEAM, DOWNSTREAM	UT	NS	602-102
R3.LS	1B33-0005-D2	ELBOW LONG SEAM, DOWNSTREAM	UT	NS	602-102
R3.ND	1B33-0006	22" ELBOW TO VALVE B33-F023A (CRC)	UT	NS	602-102
R3.LS	1B33-0006-U1	ELBOW SHORT SEAM, UPSTREAM	UT	NS	602-102
R3.LS	1B33-0006-U2	ELBOW LONG SEAM, DOWNSTREAM	UT	NS	602-102
R3.ND	1B33-0007	22" VALVE B33-F023A TO PIPE (CRC)	UT	NS	602-102
R3.LS	1B33-0007-D	PIPE SEAM, DOWNSTREAM	UT	NS	602-102
R3.ND	1B33-0008	22" PIPE TO 22" X 4" CONTOUR NOZZLE	UT	NS	602-102
R3.ND	1B33-0008A	22" PIPE TO 22" X 4" SWEEPOLET	UT	NS	602-102
R3.ND	1B33-0009	22" X 4" CONTOUR NOZZLE TO 4" PIPE	UT	NS	602-102
R3.LS	1B33-0009-D	PIPE SEAM, DOWNSTREAM	UT	NS	602-102
R3.ND	1B33-0010	4" PIPE TO FLANGE	UT	NS	602-102
R3.LS	1B33-0010-U	PIPE SEAM, UPSTREAM	UT	NS	602-102
R3.ND	1B33-0011	22" PIPE TO ELBOW	UT	NS	602-102
R3.LS	1B33-0011-U	PIPE SEAM, UPSTREAM	UT	NS	602-102
R3.LS	1B33-0011-D1	ELBOW SHORT SEAM, DOWNSTREAM	UT	NS	602-102
R3.LS	1B33-0011-D2	ELBOW LONG SEAM, DOWNSTREAM	UT	NS	602-102
R3.ND	1B33-0012	22" ELBOW TO PUMP C001A CASING (CRC)	UT	NS	602-102
R3.LS	1B33-0012-U1	ELBOW SHORT SEAM, UPSTREAM	UT	NS	602-102
R3.LS	1B33-0012-U2	ELBOW LONG SEAM, UPSTREAM	UT	NS	602-102

ITEM NO.	MARK NO.	COMPONENT DESCRIPTION	EXAM METHOD	PERIOD SCHED.	ISI ISO SS-305-
		EXAMINATION CATEGORY: R-A[1] (CODE CASE N-578; FORMERLY B-J)			
R3.ND	1B33-0014	PUMP C001A CASING TO 24" PIPE (CRC)	UT	NS	602-102
R3.LS	1B33-0014-D	PIPE SEAM, DOWNSTREAM	UT	NS	602-102
R3.ND	1B33-0015	24" PIPE TO 24" X 4" CONTOUR NOZZLE	UT	NS	602-102
R3.ND	1B33-0016	24" X 4" CONTOUR NOZZLE TO 4" PIPE	UT	NS	602-102
R3.LS	1B33-0016-D	PIPE SEAM, DOWNSTREAM	UT	NS	602-102
R3.ND	1B33-0017	4" PIPE TO FLANGE	UT	NS	602-102
R3.LS	1B33-0017-U	PIPE SEAM, UPSTREAM	UT	NS	602-102
R3.ND	1B33-0018	24" PIPE TO VALVE B33-F060A (CRC)	UT	NS	602-102
R3.LS	1B33-0018-U	PIPE SEAM, UPSTREAM	UT	NS	602-102
R3.ND	1B33-0019	24" VALVE B33-F060A TO PIPE (CRC)	UT	NS	602-102
R3.LS	1B33-0019-D	PIPE SEAM, DOWNSTREAM	UT	NS	602-102
R3.ND	1B33-0020	24" PIPE TO ELBOW	UT	2*	602-102
R3.LS	1B33-0020-U	PIPE SEAM, UPSTREAM	UT	2*	602-102
R3.LS	1B33-0020-D1	ELBOW SHORT SEAM	UT	2*	602-102
R3.LS	1B33-0020-D2	ELBOW LONG SEAM	UT	2*	602-102
R3.ND	1B33-0021	24" ELBOW TO PIPE	UT	2*	602-102
R3.LS	1B33-0021-U1	ELBOW SHORT SEAM	UT	2*	602-102
R3.LS	1B33-0021-U2	ELBOW LONG SEAM	UT	2*	602-102
R3.LS	1B33-0021-D	PIPE SEAM, DOWNSTREAM	UT	2*	602-102
R3.ND	1B33-0022	24" PIPE TO VALVE B33-F067A (CRC)	UT	NS	602-102
R3.LS	1B33-0022-U	PIPE SEAM, UPSTREAM	UT	NS	602-102
R3.ND	1B33-0023	24" VALVE B33-F067A TO PIPE (CRC)	UT	NS	602-102
R3.LS	1B33-0023-D	PIPE SEAM, DOWNSTREAM	UT	NS	602-102
R3.ND	1B33-0024	24" PIPE TO ELBOW	UT	NS	602-102
R3.LS	1B33-0024-U	PIPE SEAM, UPSTREAM	UT	NS	602-102
R3.LS	1B33-0024-D1	ELBOW SHORT SEAM, DOWNSTREAM	UT	NS	602-102
R3.LS	1B33-0024-D2	ELBOW LONG SEAM, DOWNSTREAM	UT	NS	602-102
R3.ND	1B33-0025	24" ELBOW TO PIPE	UT	NS	602-102
R3.LS	1B33-0025-U1	ELBOW SHORT SEAM, UPSTREAM	UT	NS	602-102
R3.LS	1B33-0025-U2	ELBOW LONG SEAM, UPSTREAM	UT	NS	602-102
R3.LS	1B33-0025-D	PIPE SEAM, DOWNSTREAM	UT	NS	602-102
R3.ND	1B33-0026	24" PIPE TO 24" X 16" CROSS (CRC)	UT	NS	602-102
R3.LS	1B33-0026-U	PIPE SEAM, UPSTREAM	UT	NS	602-102
R3.ND	1B33-0027	16" PIPE CAP TO PIPE (CRC)	UT	NS	602-101
R3.LS	1B33-0027-U	PIPE SEAM, UPSTREAM	UT	NS	602-101
R3.ND	1B33-0028	16" PIPE TO 16" X 12" SWEEPOLET	UT	1*	602-101
R3.ND	1B33-0029	16" PIPE TO 16" X 12" SWEEPOLET	UT	NS	602-101
R3.ND	1B33-0030	16" PIPE TO 24" X 16" CROSS	UT	NS	602-101
R3.LS	1B33-0030-D	PIPE SEAM, DOWNSTREAM	UT	NS	602-101

ITEM NO.	MARK NO.	COMPONENT DESCRIPTION	EXAM METHOD	PERIOD SCHED.	ISI ISO SS-305-
		EXAMINATION CATEGORY: R-A[1] (CODE CASE N-578; FORMERLY B-J)			
R3.ND	1B33-0031	24" X 16" CROSS TO 16" PIPE (CRC)	UT	NS	602-101
R3.LS	1B33-0031-D	PIPE SEAM, DOWNSTREAM	UT	NS	602-101
R3.ND	1B33-0032	16" PIPE TO 16" X 12" SWEEPOLET	UT	NS	602-101
R3.ND	1B33-0033	16" PIPE TO 16" X 12" SWEEPOLET	UT	NS	602-101
R3.ND	1B33-0034	16" PIPE TO CAP (CRC)	UT	NS	602-101
R3.LS	1B33-0034-U	PIPE SEAM, UPSTREAM	UT	NS	602-101
R3.ND	1B33-0035	16" X 12" SWEEPOLET TO 12" PIPE (CRC)	UT	NS	602-101
R3.LS	1B33-0035-D	PIPE SEAM, DOWNSTREAM	UT	NS	602-101
R3.ND	1B33-0036	12" PIPE TO ELBOW	UT	NS	602-101
R3.LS	1B33-0036-U	PIPE SEAM, UPSTREAM	UT	NS	602-101
R3.LS	1B33-0036-D	ELBOW SEAM, DOWNSTREAM	UT	NS	602-101
R3.ND	1B33-0037	12" ELBOW TO PIPE	UT	NS	602-101
R3.LS	1B33-0037-U	ELBOW SEAM, UPSTREAM	UT	NS	602-101
R3.LS	1B33-0037-D	PIPE SEAM, DOWNSTREAM	UT	NS	602-101
R3.ND	1B33-0038	12" PIPE TO NOZZLE N2A SAFE-END (CRC)	UT	NS	602-101
R3.LS	1B33-0038-U	PIPE SEAM, UPSTREAM	UT	NS	602-101
R3.ND	1B33-0040	16" X 12" SWEEPOLET TO 12" PIPE (CRC)	UT	NS	602-101
R3.LS	1B33-0040-D	PIPE SEAM, DOWNSTREAM	UT	NS	602-101
R3.ND	1B33-0041	12" PIPE TO ELBOW	UT	NS	602-101
R3.LS	1B33-0041-U	PIPE SEAM, UPSTREAM	UT	NS	602-101
R3.LS	1B33-0041-D	PIPE SEAM, DOWNSTREAM	UT	NS	602-101
R3.ND	1B33-0042	12" ELBOW TO PIPE	UT	NS	602-101
R3.LS	1B33-0042-U	ELBOW SEAM, UPSTREAM	UT	NS	602-101
R3.LS	1B33-0042-D	PIPE SEAM, DOWNSTREAM	UT	NS	602-101
R3.ND	1B33-0043	12" PIPE TO NOZZLE N2B SAFE-END (CRC)	UT	NS	602-101
R3.LS	1B33-0043-U	PIPE SEAM, UPSTREAM	UT	NS	602-101
R3.ND	1B33-0045	24" X 16" CROSS TO 24" X 12" REDUCER	UT	NS	602-101
R3.ND	1B33-0046	24" X 12" REDUCER TO 12" PIPE (CRC)	UT	NS	602-101
R3.LS	1B33-0046-D	PIPE SEAM, DOWNSTREAM	UT	NS	602-101
R3.ND	1B33-0047	12" PIPE TO ELBOW	UT	NS	602-101
R3.LS	1B33-0047-U	PIPE SEAM, UPSTREAM	UT	NS	602-101
R3.LS	1B33-0047-D	ELBOW SEAM, DOWNSTREAM	UT	NS	602-101
R3.ND	1B33-0048	12" ELBOW TO PIPE	UT	NS	602-101
R3.LS	1B33-0048-U	ELBOW SEAM, UPSTREAM	UT	NS	602-101
R3.LS	1B33-0048-D	PIPE SEAM, DOWNSTREAM	UT	NS	602-101
R3.ND	1B33-0049	12" PIPE TO NOZZLE N2C SAFE-END (CRC)	UT	NS	602-101
R3.LS	1B33-0049-U	PIPE SEAM, UPSTREAM	UT	NS	602-101
R3.ND	1B33-0051	16" X 12" SWEEPOLET TO 12" PIPE (CRC)	UT	NS	602-101
R3.LS	1B33-0051-D	PIPE SEAM, DOWNSTREAM	UT	NS	602-101

ITEM NO.	MARK NO.	COMPONENT DESCRIPTION	EXAM METHOD	PERIOD SCHED.	ISI ISO SS-305-
		EXAMINATION CATEGORY: R-A[1] (CODE CASE N-578; FORMERLY B-J)			
R3.ND	1B33-0052	12" PIPE TO ELBOW	UT	NS	602-101
R3.LS	1B33-0052-U	PIPE SEAM, UPSTREAM	UT	NS	602-101
R3.LS	1B33-0052-D	ELBOW SEAM, DOWNSTREAM	UT	NS	602-101
R3.ND	1B33-0053	12" ELBOW TO PIPE	UT	NS	602-101
R3.LS	1B33-0053-U	ELBOW SEAM, UPSTREAM	UT	NS	602-101
R3.LS	1B33-0053-D	PIPE SEAM, DOWNSTREAM	UT	NS	602-101
R3.ND	1B33-0054	12" PIPE TO NOZZLE N2D SAFE-END (CRC)	UT	NS	602-101
R3.LS	1B33-0054-U	PIPE SEAM, UPSTREAM	UT	NS	602-101
R3.ND	1B33-0056	16" X 12" SWEEPOLET TO 12" PIPE (CRC)	UT	2*	602-101
R3.LS	1B33-0056-D	PIPE SEAM, DOWNSTREAM	UT	2*	602-101
R3.ND	1B33-0057	12" PIPE TO ELBOW	UT	2*	602-101
R3.LS	1B33-0057-U	PIPE SEAM, UPSTREAM	UT	2*	602-101
R3.LS	1B33-0057-D	ELBOW SEAM, DOWNSTREAM	UT	2*	602-101
R3.ND	1B33-0058	12" ELBOW TO PIPE	UT	1*	602-101
R3.LS	1B33-0058-U	ELBOW SEAM, UPSTREAM	UT	1*	602-101
R3.LS	1B33-0058-D	PIPE SEAM, DOWNSTREAM	UT	1*	602-101
R3.ND	1B33-0059	12" PIPE TO NOZZLE N2E SAFE-END (CRC)	UT	NS	602-101
R3.LS	1B33-0059-U	PIPE SEAM, UPSTREAM	UT	NS	602-101
R3.ND	1B33-0062	22" NOZZLE N1B SAFE-END TO PIPE (CRC)	UT	NS	602-104
R3.LS	1B33-0062-D	PIPE SEAM, DOWNSTREAM	UT	NS	602-104
R3.ND	1B33-0063	22" PIPE TO ELBOW	UT	NS	602-104
R3.LS	1B33-0063-U	PIPE SEAM, UPSTREAM	UT	NS	602-104
R3.LS	1B33-0063-D1	ELBOW SHORT SEAM, DOWNSTREAM	UT	NS	602-104
R3.LS	1B33-0063-D2	ELBOW LONG SEAM, DOWNSTREAM	UT	NS	602-104
R3.ND	1B33-0063A	22" ELBOW TO PIPE	UT	NS	602-104
R3.LS	1B33-0063A-U1	ELBOW SHORT SEAM, UPSTREAM	UT	NS	602-104
R3.LS	1B33-0063A-U2	ELBOW LONG SEAM, UPSTREAM	UT	NS	602-104
R3.LS	1B33-0063A-D	PIPE SEAM, DOWNSTREAM	UT	NS	602-104
R3.ND	1B33-0064	22" PIPE TO PIPE (CRC)	UT	NS	602-104
R3.LS	1B33-0064-U	PIPE SEAM, UPSTREAM	UT	NS	602-104
R3.LS	1B33-0064-D	PIPE SEAM, DOWNSTREAM	UT	NS	602-104
R3.ND	1B33-0065	22" PIPE TO 22" X 22" X 20" TEE	UT	NS	602-104
R3.LS	1B33-0065-U	PIPE SEAM, UPSTREAM	UT	NS	602-104
R3.ND	1B33-0066	22" X 22" X 20" TEE TO 22" PIPE	UT	NS	602-104
R3.LS	1B33-0066-D	PIPE SEAM, DOWNSTREAM	UT	NS	602-104
R3.ND	1B33-0067	22" PIPE TO ELBOW	UT	NS	602-104
R3.LS	1B33-0067-U	PIPE SEAM, UPSTREAM	UT	NS	602-104
R3.LS	1B33-0067-D1	ELBOW SHORT SEAM, DOWNSTREAM	UT	NS	602-104
R3.LS	1B33-0067-D2	ELBOW LONG SEAM, DOWNSTREAM	UT	NS	602-104

ITEM NO.	MARK NO.	COMPONENT DESCRIPTION	EXAM METHOD	PERIOD SCHED.	ISI ISO SS-305-
		EXAMINATION CATEGORY: R-A[1] (CODE CASE N-578; FORMERLY B-J)			
R3.ND	1B33-0068	22" ELBOW TO VALVE B33-F023B (CRC)	UT	NS	602-104
R3.LS	1B33-0068-U1	ELBOW SHORT SEAM, UPSTREAM	UT	NS	602-104
R3.LS	1B33-0068-U2	ELBOW LONG SEAM, UPSTREAM	UT	NS	602-104
R3.ND	1B33-0069	VALVE B33-F023B TO 22" PIPE (CRC)	UT	NS	602-104
R3.LS	1B33-0069-D	PIPE SEAM, DOWNSTREAM	UT	NS	602-104
R3.ND	1B33-0070	22" PIPE TO 22" X 4" CONTOUR NOZZLE	UT	NS	602-104
R3.ND	1B33-0070A	22" PIPE TO 22" X 4" SWEEPOLET	UT	NS	602-104
R3.ND	1B33-0071	22" X 4" CONTOUR NOZZLE TO 4" PIPE	UT	NS	602-104
R3.LS	1B33-0071-D	PIPE SEAM, DOWNSTREAM	UT	NS	602-104
R3.ND	1B33-0072	4" PIPE TO FLANGE	UT	NS	602-104
R3.LS	1B33-0072-U	PIPE SEAM, UPSTREAM	UT	NS	602-104
R3.ND	1B33-0073	22" PIPE TO ELBOW	UT	NS	602-104
R3.LS	1B33-0073-U	PIPE SEAM, UPSTREAM	UT	NS	602-104
R3.LS	1B33-0073-D1	ELBOW SHORT SEAM, DOWNSTREAM	UT	NS	602-104
R3.LS	1B33-0073-D2	ELBOW LONG SEAM, DOWNSTREAM	UT	NS	602-104
R3.ND	1B33-0074	22" ELBOW TO PUMP C001B CASING (CRC)	UT	NS	602-104
R3.LS	1B33-0074-U1	ELBOW SHORT SEAM, UPSTREAM	UT	NS	602-104
R3.LS	1B33-0074-U2	ELBOW LONG SEAM, UPSTREAM	UT	NS	602-104
R3.ND	1B33-0076	PUMP C001B CASING TO 24" PIPE (CRC)	UT	NS	602-104
R3.LS	1B33-0076-D	PIPE SEAM, DOWNSTREAM	UT	NS	602-104
R3.ND	1B33-0077	24" PIPE TO 24" X 4" CONTOUR NOZZLE	UT	NS	602-104
R3.ND	1B33-0078	24" X 4" CONTOUR NOZZLE TO 4" PIPE	UT	NS	602-104
R3.LS	1B33-0078-D	PIPE SEAM, DOWNSTREAM	UT	NS	602-104
R3.ND	1B33-0079	4" PIPE TO FLANGE	UT	NS	602-104
R3.LS	1B33-0079-U	PIPE SEAM, UPSTREAM	UT	NS	602-104
R3.ND	1B33-0080	24" PIPE TO VALVE B33-F060B (CRC)	UT	NS	602-104
R3.LS	1B33-0080-U	PIPE SEAM, UPSTREAM	UT	NS	602-104
R3.ND	1B33-0081	VLV B33-F060B TO 24" PIPE (CRC)	UT	NS	602-104
R3.LS	1B33-0081-D	PIPE SEAM, DOWNSTREAM	UT	NS	602-104
R3.ND	1B33-0082	24" PIPE TO ELBOW	UT	NS	602-104
R3.LS	1B33-0082-U	PIPE SEAM, UPSTREAM	UT	NS	602-104
R3.LS	1B33-0082-D1	ELBOW SHORT SEAM, DOWNSTREAM	UT	NS	602-104
R3.LS	1B33-0082-D2	ELBOW LONG SEAM, DOWNSTREAM	UT	NS	602-104
R3.ND	1B33-0083	24" ELBOW TO PIPE	UT	NS	602-104
R3.LS	1B33-0083-U1	ELBOW SHORT SEAM, UPSTREAM	UT	NS	602-104
R3.LS	1B33-0083-U2	ELBOW LONG SEAM, UPSTREAM	UT	NS	602-104
R3.LS	1B33-0083-D	PIPE SEAM, DOWNSTREAM	UT	NS	602-104
R3.ND	1B33-0084	24" PIPE TO VALVE B33-F067B (CRC)	UT	NS	602-104
R3.LS	1B33-0084-U	PIPE SEAM, UPSTREAM	UT	NS	602-104

ITEM NO.	MARK NO.	COMPONENT DESCRIPTION	EXAM METHOD	PERIOD SCHED.	ISI ISO SS-305-
		EXAMINATION CATEGORY: R-A[1] (CODE CASE N-578; FORMERLY B-J)			
R3.ND	1B33-0085	24" VALVE F067B TO PIPE (CRC)	UT	NS	602-104
R3.LS	1B33-0085-D	PIPE SEAM, DOWNSTREAM	UT	NS	602-104
R3.ND	1B33-0086	24" PIPE TO ELBOW	UT	NS	602-104
R3.LS	1B33-0086-U	PIPE SEAM, UPSTREAM	UT	NS	602-104
R3.LS	1B33-0086-D1	ELBOW LONG SEAM, DOWNSTREAM	UT	NS	602-104
R3.LS	1B33-0086-D2	ELBOW LONG SEAM, DOWNSTREAM	UT	NS	602-104
R3.ND	1B33-0087	24" ELBOW TO PIPE	UT	NS	602-104
R3.LS	1B33-0087-U1	ELBOW SHORT SEAM, UPSTREAM	UT	NS	602-104
R3.LS	1B33-0087-U2	ELBOW LONG SEAM, UPSTREAM	UT	NS	602-104
R3.LS	1B33-0087-D	PIPE SEAM, DOWNSTREAM	UT	NS	602-104
R3.ND	1B33-0088	24" PIPE TO 24" X 16" CROSS (CRC)	UT	NS	602-104
R3.LS	1B33-0088-U	PIPE SEAM, UPSTREAM	UT	NS	602-104
R3.ND	1B33-0089	16" PIPE CAP TO PIPE (CRC)	UT	NS	602-103
R3.LS	1B33-0089-U	PIPE SEAM, UPSTREAM	UT	NS	602-103
R3.ND	1B33-0090	16" PIPE TO 16" X 12" SWEEPOLET	UT	NS	602-103
R3.ND	1B33-0091	16" PIPE TO 16" X 12" SWEEPOLET	UT	NS	602-103
R3.ND	1B33-0092	16" PIPE TO 24" X 16" CROSS	UT	NS	602-103
R3.LS	1B33-0092-D	PIPE SEAM, DOWNSTREAM	UT	NS	602-103
R3.ND	1B33-0093	24" X 16" CROSS TO 16" PIPE (CRC)	UT	NS	602-103
R3.LS	1B33-0093-D	PIPE SEAM, DOWNSTREAM	UT	NS	602-103
R3.ND	1B33-0094	16" PIPE TO 16" X 12" SWEEPOLET	UT	NS	602-103
R3.ND	1B33-0095	16" PIPE TO 16" X 12" SWEEPOLET	UT	NS	602-103
R3.ND	1B33-0096	16" PIPE TO CAP (CRC)	UT	2*	602-103
R3.LS	1B33-0096-U	PIPE SEAM, UPSTREAM	UT	2*	602-103
R3.ND	1B33-0097	16" X 12" SWEEPOLET TO 12" PIPE (CRC)	UT	NS	602-103
R3.LS	1B33-0097-D	PIPE SEAM, DOWNSTREAM	UT	NS	602-103
R3.ND	1B33-0098	12" PIPE TO ELBOW	UT	NS	602-103
R3.LS	1B33-0098-D	ELBOW SEAM, DOWNSTREAM	UT	NS	602-103
R3.LS	1B33-0098-U	PIPE SEAM, UPSTREAM	UT	NS	602-103
R3.ND	1B33-0099	12" ELBOW TO PIPE	UT	NS	602-103
R3.LS	1B33-0099-D	PIPE SEAM, DOWNSTREAM	UT	NS	602-103
R3.LS	1B33-0099-U	ELBOW SEAM, UPSTREAM	UT	NS	602-103
R3.ND	1B33-0100	12" PIPE TO NOZZLE N2F SAFE-END (CRC)	UT	NS	602-103
R3.LS	1B33-0100-U	PIPE SEAM, UPSTREAM	UT	NS	602-103
R3.ND	1B33-0102	16" X 12" SWEEPOLET TO 12" PIPE (CRC)	UT	NS	602-103
R3.LS	1B33-0102-D	PIPE SEAM, DOWNSTREAM	UT	NS	602-103
R3.ND	1B33-0103	12" PIPE TO ELBOW	UT	NS	602-103
R3.LS	1B33-0103-D	ELBOW SEAM, DOWNSTREAM	UT	NS	602-103
R3.LS	1B33-0103-U	PIPE SEAM, UPSTREAM	UT	NS	602-103

ITEM NO.	MARK NO.	COMPONENT DESCRIPTION	EXAM METHOD	PERIOD SCHED.	ISI ISO SS-305-
		EXAMINATION CATEGORY: R-A[1] (CODE CASE N-578; FORMERLY B-J)			
R3.ND	1B33-0104	12" ELBOW TO PIPE	UT	NS	602-103
R3.LS	1B33-0104-D	PIPE SEAM, DOWNSTREAM	UT	NS	602-103
R3.LS	1B33-0104-U	ELBOW SEAM, UPSTREAM	UT	NS	602-103
R3.ND	1B33-0105	12" PIPE TO NOZZLE N2G SAFE-END (CRC)	UT	NS	602-103
R3.LS	1B33-0105-U	PIPE SEAM, UPSTREAM	UT	NS	602-103
R3.ND	1B33-0107	24" X 16" CROSS TO 24" X 12" REDUCER	UT	NS	602-103
R3.ND	1B33-0108	24" X 12" REDUCER TO 12" PIPE (CRC)	UT	NS	602-103
R3.LS	1B33-0108-D	PIPE SEAM, DOWNSTREAM	UT	NS	602-103
R3.ND	1B33-0109	12" PIPE TO ELBOW	UT	3*	602-103
R3.LS	1B33-0109-D	ELBOW SEAM, DOWNSTREAM	UT	3*	602-103
R3.LS	1B33-0109-U	PIPE SEAM, UPSTREAM	UT	3*	602-103
R3.ND	1B33-0110	12" ELBOW TO PIPE	UT	3*	602-103
R3.LS	1B33-0110-D	PIPE SEAM, DOWNSTREAM	UT	3*	602-103
R3.LS	1B33-0110-U	ELBOW SEAM, UPSTREAM	UT	3*	602-103
R3.ND	1B33-0111	12" PIPE TO NOZZLE N2H SAFE-END (CRC)	UT	NS	602-103
R3.LS	1B33-0111-U	PIPE SEAM, UPSTREAM	UT	NS	602-103
R3.ND	1B33-0113	16" X 12" SWEEPOLET TO 12" PIPE (CRC)	UT	NS	602-103
R3.LS	1B33-0113-D	PIPE SEAM, DOWNSTREAM	UT	NS	602-103
R3.ND	1B33-0114	12" PIPE TO ELBOW	UT	NS	602-103
R3.LS	1B33-0114-D	ELBOW SEAM, DOWNSTREAM	UT	NS	602-103
R3.LS	1B33-0114-U	PIPE SEAM, UPSTREAM	UT	NS	602-103
R3.ND	1B33-0115	12" ELBOW TO PIPE	UT	NS	602-103
R3.LS	1B33-0115-D	PIPE SEAM, DOWNSTREAM	UT	NS	602-103
R3.LS	1B33-0115-U	ELBOW SEAM, UPSTREAM	UT	NS	602-103
R3.ND	1B33-0116	12" PIPE TO NOZZLE N2J SAFE-END (CRC)	UT	NS	602-103
R3.LS	1B33-0116-U	PIPE SEAM, UPSTREAM	UT	NS	602-103
R3.ND	1B33-0118	16" X 12" SWEEPOLET TO 12" PIPE (CRC)	UT	NS	602-103
R3.LS	1B33-0118-D	PIPE SEAM, DOWNSTREAM	UT	NS	602-103
R3.ND	1B33-0119	12" PIPE TO ELBOW	UT	NS	602-103
R3.LS	1B33-0119-D	ELBOW SEAM, DOWNSTREAM	UT	NS	602-103
R3.LS	1B33-0119-U	PIPE SEAM, UPSTREAM	UT	NS	602-103
R3.ND	1B33-0120	12" ELBOW TO PIPE	UT	NS	602-103
R3.LS	1B33-0120-D	PIPE SEAM, DOWNSTREAM	UT	NS	602-103
R3.LS	1B33-0120-U	PIPE SEAM, UPSTREAM	UT	NS	602-103
R3.ND	1B33-0121	12" PIPE TO NOZZLE N2K SAFE-END (CRC)	UT	NS	602-103
R3.LS	1B33-0121-U	PIPE SEAM, UPSTREAM	UT	NS	602-103
R2.ND	1C41-0001	SWEEPOLET TO 12" PIPE	UT	3	691-101
R3.ND	1C41-0002	3" PIPE TO SWEEPOLET	UT	NS	691-101

ITEM NO.	MARK NO.	COMPONENT DESCRIPTION	EXAM METHOD	PERIOD SCHED.	ISI ISO SS-305-
		EXAMINATION CATEGORY: R-A[1] (CODE CASE N-578; FORMERLY B-J)			
R3.ND	1C41-0003	3" X 1 1/2" REDUCING ELBOW TO 3" PIPE	UT	NS	691-101
R3.ND	1C41-0004	1-1/2" PIPE TO 3" X 1-1/2" REDUCING ELBOW	UT	NS	691-101
R3.ND	1C41-0005	1-1/2" ELBOW TO PIPE	UT	NS	691-101
R3.ND	1C41-0006	1-1/2" PIPE TO ELBOW	UT	NS	691-101
R3.ND	1C41-0007	1-1/2" VALVE F036 TO PIPE	UT	NS	691-101
R3.ND	1C41-0008	1-1/2" PIPE TO VALVE F036	UT	NS	691-101
R3.ND	1C41-0008A	1-1/2" ELBOW TO PIPE	UT	NS	691-101
R3.ND	1C41-0008B	1-1/2" PIPE TO ELBOW	UT	NS	691-101
R3.ND	1C41-0008C	1-1/2" ELBOW TO PIPE	UT	NS	691-101
R3.ND	1C41-0008D	1-1/2" PIPE TO ELBOW	UT	NS	691-101
R3.ND	1C41-0009	1-1/2" TEE TO PIPE	UT	NS	691-101
R3.ND	1C41-0010	1-1/2" TEE TO 1-1/2" X 3/4" REDUCER	UT	NS	691-101
R3.ND	1C41-0011	1-1/2" PIPE TO TEE	UT	NS	691-101
R3.ND	1C41-0012	1-1/2" VALVE F007 TO PIPE	UT	NS	691-101
R3.ND	1C41-0013	1-1/2" PIPE TO VALVE F007	UT	NS	691-101
R3.ND	1C41-0014	1-1/2" ELBOW TO PIPE	UT	NS	691-101
R3.ND	1C41-0015	1-1/2" PIPE TO ELBOW	UT	NS	691-101
R3.ND	1C41-0016	1-1/2" ELBOW TO PIPE	UT	NS	691-101
R3.ND	1C41-0017	1-1/2" PIPE TO ELBOW	UT	NS	691-101
R3.ND	1C41-0018	1-1/2" ELBOW TO PIPE	UT	NS	691-101
R3.ND	1C41-0019	1-1/2" PIPE TO ELBOW	UT	NS	691-101
R3.ND	1C41-0020	1-1/2" ELBOW PIPE	UT	NS	691-101
R3.ND	1C41-0021	1-1/2" PIPE TO ELBOW	UT	NS	691-101
R3.ND	1C41-0021A	1-1/2" COUPLING TO PIPE	UT	NS	691-101
R3.ND	1C41-0021B	1-1/2" PIPE TO COUPLING	UT	NS	691-101
R2.ND	1C41-0022	1-1/2" ELBOW TO PIPE	UT	NS	691-102
R2.ND	1C41-0023	1-1/2" PIPE TO ELBOW	UT	NS	691-102
R2.ND	1C41-0024	1-1/2" TEE TO PIPE	UT	NS	691-102
R2.ND	1C41-0025	1-1/2" X 3/4" REDUCER TO 1-1/2" TEE	UT	NS	691-102
R2.ND	1C41-0026	1-1/2" PIPE TO TEE	UT	NS	691-102
R2.ND	1C41-0027	1-1/2" VALVE F006 TO PIPE	UT	NS	691-102
R3.ND	1E12-0001	22" X 22" X 20" TEE TO 20" PIPE	UT	NS	642-118
R3.ND	1E12-0002	20" ELBOW TO PIPE	UT	NS	642-118
R3.ND	1E12-0003	20" PIPE TO ELBOW	UT	NS	642-118
R3.ND	1E12-0004	20" VALVE F010 TO PIPE	UT	NS	642-117
R3.ND	1E12-0005	20" PIPE TO VALVE F010	UT	NS	642-117
R3.ND	1E12-0006	20" VALVE F009 TO PIPE	UT	NS	642-117
R3.11	1E12-0007	20" PIPE TO VALVE F009	UT	NS	642-117
R3.11	1E12-0008	20" ELBOW TO PIPE	UT	NS	642-117

ITEM NO.	MARK NO.	COMPONENT DESCRIPTION	EXAM METHOD	PERIOD SCHED.	ISI ISO SS-305-
		EXAMINATION CATEGORY: R-A[1] (CODE CASE N-578; FORMERLY B-J)			
R3.11	1E12-0009	20" PIPE TO ELBOW	UT	NS	642-117
R3.11	1E12-0010	20" P421 PROCESS PIPE TO PIPE	UT	NS	642-117
R1.11	1E12-0011	20" PIPE TO P421 PROCESS PIPE	UT	2	642-101
R1.11	1E12-0012	20" VALVE F008 TO PIPE	UT	NS	642-101
R2.ND	1E12-0398	12" VALVE F042A TO PIPE	UT	NS	642-126
R2.ND	1E12-0399	12" PIPE TO ELBOW	UT	NS	642-126
R2.ND	1E12-0400	12" ELBOW TO PIPE	UT	NS	642-126
R2.ND	1E12-0401	12" PIPE TO ELBOW	UT	NS	642-126
R2.ND	1E12-0402	12" ELBOW TO PRB2044 PROCESS PIPE	UT	3	642-126
R3.ND	1E12-0403	12" PRB2044 PROCESS PIPE TO PIPE	UT	NS	642-125
R3.ND	1E12-0403A	12" PIPE TO PIPE	UT	NS	642-125
R3.ND	1E12-0404	12" PIPE TO VALVE F0041A	UT	NS	642-125
R2.ND	1E12-0405	12" VALVE F041A TO PIPE	UT	NS	642-125
R2.ND	1E12-0406	12" PIPE TO VALVE F039A	UT	NS	642-125
R2.ND	1E12-0407	12" VALVE F039A TO PIPE	UT	NS	642-125
R2.ND	1E12-0408	12" PIPE TO ELBOW	UT	NS	642-125
R2.ND	1E12-0409	12" ELBOW TO PIPE	UT	NS	642-125
R2.ND	1E12-0410	12" PIPE TO ELBOW	UT	NS	642-124
R2.ND	1E12-0411	12" ELBOW TO PIPE	UT	NS	642-124
R2.ND	1E12-0412	12" PIPE TO N6A SAFE-END EXTENSION	UT	NS	642-124
R3.11	1E12-0437	6" VALVE F023 TO PIPE	UT	NS	642-122
R3.11	1E12-0438	6" PIPE TO ELBOW	UT	NS	642-122
R3.11	1E12-0439	6" ELBOW TO PIPE	UT	NS	642-122
R3.11	1E12-0439A	1-1/2" COUPLING TO 6" PIPE BRANCH	UT	NS	642-122
R3.11	1E12-0439B	1-1/2" COUPLING TO REDUCING INSERT SOCKET WELD	UT	NS	642-122
R3.11	1E12-0440	6" PIPE TO VALVE F019	UT	NS	642-122
R1.11	1E12-0441	6" VALVE F019 TO PIPE	UT	NS	642-122
R1.11	1E12-0442	6" PIPE TO 6" X 6" TEE RCIC INTERTIE	UT	NS	642-122
R2.ND	1E12-0694	12" VALVE F042B TO PIPE	UT	NS	642-137
R2.ND	1E12-0695	12" PIPE TO ELBOW	UT	NS	642-137
R2.ND	1E12-0696	12" ELBOW TO PIPE	UT	3	642-137
R2.ND	1E12-0697	12" PIPE TO ELBOW	UT	NS	642-139
R2.ND	1E12-0698	12" ELBOW TO PIPE	UT	NS	642-139
R2.ND	1E12-0698A	12" PIPE TO PIPE	UT	NS	642-139
R2.ND	1E12-0699	12" PIPE TO ELBOW	UT	NS	642-139
R2.ND	1E12-0700	12" ELBOW TO PIPE	UT	NS	642-139
R2.ND	1E12-0701	12" PIPE TO ELBOW	UT	NS	642-139
R2.ND	1E12-0702	12" ELBOW TO PIPE	UT	NS	642-139

ITEM NO.	MARK NO.	COMPONENT DESCRIPTION	EXAM METHOD	PERIOD SCHED.	ISI ISO SS-305-
		EXAMINATION CATEGORY: R-A[1] (CODE CASE N-578; FORMERLY B-J)			
R2.ND	1E12-0703	12" PIPE TO PIPE BEND	UT	NS	642-139
R2.ND	1E12-0704	12" PIPE BEND TO ELBOW	UT	NS	642-139
R2.ND	1E12-0705	12" ELBOW TO PRB2036 PROCESS PIPE	UT	NS	642-139
R3.ND	1E12-0706	12" PRB2036 PROCESS PIPE TO ELBOW	UT	NS	642-140
R3.ND	1E12-0707	12" ELBOW TO PIPE	UT	NS	642-140
R3.ND	1E12-0708	12" PIPE TO ELBOW	UT	NS	642-141
R3.ND	1E12-0709	12" ELBOW TO PIPE	UT	NS	642-141
R3.ND	1E12-0710	12" PIPE TO ELBOW	UT	NS	642-141
R3.ND	1E12-0711	12" ELBOW TO PIPE	UT	NS	642-141
R3.ND	1E12-0712	12" PIPE TO VALVE F041B	UT	NS	642-141
R2.ND	1E12-0713	12" VALVE F041B TO PIPE	UT	NS	642-141
R2.ND	1E12-0714	12" PIPE TO ELBOW	UT	NS	642-141
R2.ND	1E12-0715	12" ELBOW TO PIPE	UT	NS	642-141
R2.ND	1E12-0716	12" PIPE TO VALVE F039B	UT	NS	642-141
R2.ND	1E12-0717	12" VALVE F039B TO PIPE	UT	NS	642-141
R2.ND	1E12-0718	12" PIPE TO ELBOW	UT	3	642-141
R2.ND	1E12-0719	12" ELBOW TO PIPE	UT	NS	642-141
R2.ND	1E12-0720	12" PIPE TO N6B SAFE-END EXTENSION (HIGH STRESS & USAGE)	UT	NS	642-141
R2.ND	1E12-0851	12" VALVE F042C TO PIPE	UT	NS	642-134
R2.ND	1E12-0851A	12" PIPE TO ELBOW	UT	NS	642-134
R2.ND	1E12-0851AA	12" PIPE TO PIPE	UT	NS	642-134
R2.ND	1E12-0852	12" ELBOW TO PIPE	UT	NS	642-134
R2.ND	1E12-0853	12" PIPE TO ELBOW	UT	NS	642-134
R2.ND	1E12-0854	12" ELBOW TO ELBOW	UT	2	642-134
R2.ND	1E12-0855	12" ELBOW TO PIPE	UT	NS	642-134
R2.ND	1E12-0855A	12" PIPE TO PIPE	UT	NS	642-134
R2.ND	1E12-0856	12" PIPE TO P411 PROCESS PIPE	UT	NS	642-134
R2.ND	1E12-0857	12" P411 PROCESS PIPE TO PIPE	UT	NS	642-135
R2.ND	1E12-0858	12" PIPE TO ELBOW	UT	2	642-135
R2.ND	1E12-0859	12" ELBOW TO PIPE	UT	2	642-135
R2.ND	1E12-0860	12" PIPE TO ELBOW	UT	NS	642-135
R2.ND	1E12-0861	12" ELBOW TO PIPE	UT	NS	642-142
R2.ND	1E12-0862	12" PIPE TO ELBOW	UT	NS	642-142
R2.ND	1E12-0863	12" ELBOW TO PIPE	UT	NS	642-142
R2.ND	1E12-0864	12" PIPE TO ELBOW	UT	NS	642-142
R2.ND	1E12-0865	12" ELBOW TO PIPE	UT	NS	642-142
R2.ND	1E12-0866	12" PIPE TO PIPE	UT	NS	642-142
R2.ND	1E12-0867	12" PIPE TO ELBOW	UT	NS	642-142
R2.ND	1E12-0868	12" ELBOW TO PIPE	UT	NS	642-142
R2.ND	1E12-0869	12" PIPE TO ELBOW	UT	NS	642-142

ITEM NO.	MARK NO.	COMPONENT DESCRIPTION	EXAM METHOD	PERIOD SCHED.	ISI ISO SS-305-
		EXAMINATION CATEGORY: R-A[1] (CODE CASE N-578; FORMERLY B-J)			
R2.ND	1E12-0870	12" ELBOW TO PIPE	UT	NS	642-142
R2.ND	1E12-0871	12" PIPE TO ELBOW	UT	NS	642-143
R2.ND	1E12-0872	12" ELBOW TO PIPE	UT	NS	642-143
R2.ND	1E12-0873	12" PIPE TO ELBOW	UT	NS	642-143
R2.ND	1E12-0874	12" ELBOW TO PIPE	UT	2	642-143
R2.ND	1E12-0875	12" PIPE TO ELBOW	UT	NS	642-143
R2.ND	1E12-0876	12" ELBOW TO PIPE	UT	NS	642-143
R2.ND	1E12-0877	12" PIPE TO ELBOW	UT	NS	642-143
R2.ND	1E12-0878	12" ELBOW TO PIPE BEND	UT	NS	642-143
R2.ND	1E12-0879	12" PIPE BEND TO ELBOW	UT	NS	642-143
R2.ND	1E12-0880	12" ELBOW TO PRB2035 PROCESS PIPE	UT	NS	642-143
R3.ND	1E12-0881	12" PRB2035 PROCESS PIPE TO ELBOW	UT	NS	642-144
R3.ND	1E12-0882	12" ELBOW TO PIPE	UT	NS	642-144
R3.ND	1E12-0883	12" PIPE TO ELBOW	UT	NS	642-145
R3.ND	1E12-0884	12" ELBOW TO PIPE	UT	NS	642-145
R3.ND	1E12-0885	12" PIPE TO ELBOW	UT	NS	642-145
R3.ND	1E12-0886	12" ELBOW TO PIPE	UT	NS	642-145
R3.ND	1E12-0886A	12" PIPE TO PIPE	UT	NS	642-145
R3.ND	1E12-0887	12" PIPE TO VALVE F041C	UT	NS	642-145
R2.ND	1E12-0888	12" VALVE TO F041C TO PIPE	UT	NS	642-145
R2.ND	1E12-0889	12" PIPE TO ELBOW	UT	NS	642-145
R2.ND	1E12-0890	12" ELBOW TO PIPE	UT	NS	642-145
R2.ND	1E12-0891	12" PIPE TO VALVE F039C	UT	NS	642-145
R2.ND	1E12-0892	12" VALVE F039C TO PIPE	UT	1	642-145
R2.ND	1E12-0893	12" PIPE TO ELBOW	UT	NS	642-145
R2.ND	1E12-0894	12" ELBOW TO PIPE	UT	NS	642-145
R2.ND	1E12-0895	12" PIPE TO N6C SAFE-END EXTENSION	UT	NS	642-145
R2.ND	1E21-0001	12" PIPE TO N5A SAFE-END EXTENSION	UT	NS	705-111
R2.ND	1E21-0002	12" ELBOW TO PIPE	UT	NS	705-111
R2.ND	1E21-0003	12" PIPE TO ELBOW	UT	NS	705-111
R2.ND	1E21-0004	12" VALVE F007 TO PIPE	UT	2	705-111
R2.ND	1E21-0005	12" PIPE TO VALVE F007	UT	NS	705-111
R2.ND	1E21-0006	12" ELBOW TO PIPE	UT	NS	705-111
R2.ND	1E21-0007	12" PIPE TO ELBOW	UT	NS	705-111
R2.ND	1E21-0008	12" VALVE F006 TO PIPE	UT	NS	705-111
R3.ND	1E21-0009	12" PIPE TO VALVE F006	UT	NS	705-111
R3.ND	1E21-0009A	12" PIPE TO PIPE	UT	NS	705-111
R3.ND	1E21-0010	12" ELBOW TO PIPE	UT	NS	705-111
R3.ND	1E21-0011	12" PRB3046 PROCESS PIPE TO ELBOW	UT	NS	705-111

ITEM NO.	MARK NO.	COMPONENT DESCRIPTION	EXAM METHOD	PERIOD SCHED.	ISI ISO SS-305-
		EXAMINATION CATEGORY: R-A[1] (CODE CASE N-578; FORMERLY B-J)			
R2.ND	1E21-0012	12" ELBOW TO PIPE	UT	2	705-110
R2.ND	1E21-0012A	12" PIPE TO PRB3046 PROCESS PIPE	UT	2	705-110
R2.ND	1E21-0013	12" PIPE TO ELBOW	UT	NS	705-110
R2.ND	1E21-0014	12" ELBOW TO PIPE	UT	NS	705-109
R2.ND	1E21-0015	12" PIPE TO ELBOW	UT	NS	705-109
R2.ND	1E21-0015A	12" PIPE TO PIPE	UT	NS	705-109
R2.ND	1E21-0016	12" ELBOW TO PIPE	UT	NS	705-109
R2.ND	1E21-0017	12" PIPE TO ELBOW	UT	NS	705-109
R2.ND	1E21-0018	12" ELBOW TO PIPE	UT	NS	705-109
R2.ND	1E21-0019	12" PIPE TO ELBOW	UT	NS	705-109
R2.ND	1E21-0020	12" ELBOW TO PIPE	UT	NS	705-109
R2.ND	1E21-0021	12" PIPE TO ELBOW	UT	NS	705-109
R2.ND	1E21-0022	12" ELBOW TO PIPE	UT	NS	705-109
R2.ND	1E21-0023	12" P112 PROCESS PIPE TO ELBOW	UT	NS	705-109
R2.ND	1E21-0024	12" PIPE TO P112 PROCESS PIPE	UT	NS	705-108
R2.ND	1E21-0025	12" ELBOW TO PIPE	UT	NS	705-108
R2.ND	1E21-0026	12" ELBOW TO ELBOW	UT	NS	705-108
R2.ND	1E21-0027	12" PIPE TO ELBOW	UT	NS	705-108
R2.ND	1E21-0028	12" ELBOW TO PIPE	UT	NS	705-108
R2.ND	1E21-0029	12" PIPE TO ELBOW	UT	NS	705-108
R2.ND	1E21-0030	12" VALVE F005 TO PIPE	UT	NS	705-108
R2.ND	1E22-0001	N5B SAFE-END EXTENSION TO 12" PIPE	UT	NS	701-111
R2.ND	1E22-0002	12" PIPE TO ELBOW	UT	3	701-111
R2.ND	1E22-0003	12" ELBOW TO PIPE	UT	NS	701-111
R2.ND	1E22-0004	12" PIPE TO VALVE F036	UT	NS	701-111
R2.ND	1E22-0005	12" VALVE F036 TO PIPE	UT	NS	701-111
R2.ND	1E22-0006	12" PIPE TO ELBOW	UT	NS	701-111
R2.ND	1E22-0007	12" ELBOW TO PIPE	UT	NS	701-111
R2.ND	1E22-0008	12" PIPE TO VALVE F005	UT	NS	701-111
R3.ND	1E22-0009	12" VALVE F005 TO PIPE	UT	NS	701-111
R3.ND	1E22-0009A	12" PIPE TO PIPE	UT	NS	701-111
R3.ND	1E22-0010	12" ELBOW TO PIPE (BEND)	UT	NS	701-111
R3.ND	1E22-0011	12" ELBOW TO PIPE	UT	NS	701-111
R2.ND	1E22-0012	12" PIPE TO ELBOW	UT	NS	701-110
R2.ND	1E22-0013	12" ELBOW TO PIPE	UT	NS	701-110
R2.ND	1E22-0014	12" ELBOW TO PIPE	UT	NS	701-109
R2.ND	1E22-0015	12" PIPE TO ELBOW	UT	NS	701-109
R2.ND	1E22-0016	12" PIPE TO ELBOW	UT	NS	701-109

ITEM NO.	MARK NO.	COMPONENT DESCRIPTION	EXAM METHOD	PERIOD SCHED.	ISI ISO SS-305-
		EXAMINATION CATEGORY: R-A[1] (CODE CASE N-578; FORMERLY B-J)			
R2.ND	1E22-0017	12" ELBOW TO PIPE	UT	NS	701-109
R2.ND	1E22-0017A	12" PIPE TO PIPE	UT	NS	701-109
R2.ND	1E22-0018	12" PIPE TO ELBOW	UT	NS	701-109
R2.ND	1E22-0019	12" ELBOW TO PIPE	UT	NS	701-109
R2.ND	1E22-0020	12" PIPE TO ELBOW	UT	NS	701-109
R2.ND	1E22-0021	12" ELBOW TO P410 PROCESS PIPE	UT	NS	701-109
R2.ND	1E22-0022	12" P410 PROCESS PIPE TO PIPE	UT	NS	701-108
R2.ND	1E22-0023	12" PIPE TO ELBOW	UT	NS	701-108
R2.ND	1E22-0024	12" ELBOW TO PIPE	UT	2	701-108
R2.ND	1E22-0025	12" PIPE TO ELBOW	UT	2	701-108
R2.ND	1E22-0026	12" ELBOW TO PIPE	UT	NS	701-108
R2.ND	1E22-0027	12" PIPE TO VALVE F004	UT	NS	701-108
R2.ND	1E22-0135	12" PIPE TO PIPE	UT	NS	701-109
R2.ND	1E32-0196	2" COUPLING ON VALVE F028B TO PIPE	UT	NS	605-108
R2.ND	1E32-0197	2" PIPE TO ELBOW	UT	NS	605-108
R2.ND	1E32-0198	2" ELBOW TO 2" X 3/4" REDUCER	UT	NS	605-108
1E32-0199 TO 0211 DELETED IAW DCP 96-0044					
R2.ND	1E32-0215	2" COUPLING ON VALVE F028A TO PIPE	UT	3	605-107
R2.ND	1E32-0216	2" PIPE TO ELBOW	UT	3	605-107
R2.ND	1E32-0217	2" ELBOW TO 2" X 3/4" REDUCER	UT	NS	605-107
1E32-0218 TO 0230 DELETED IAW DCP 96-0044					
R2.ND	1E32-0234	2" COUPLING ON VALVE F028D TO PIPE	UT	NS	605-110
R2.ND	1E32-0235	2" PIPE TO ELBOW	UT	NS	605-110
R2.ND	1E32-0236	2" ELBOW TO 2" X 3/4" REDUCER	UT	NS	605-110
1E32-0237 TO 0249 DELETED IAW DCP 96-0044					
R2.ND	1E32-0252	2" COUPLING ON VALVE F028C TO PIPE	UT	NS	605-109
R2.ND	1E32-0253	2" PIPE TO ELBOW	UT	NS	605-109
R2.ND	1E32-0254	2" ELBOW TO 2" X 3/4" REDUCER	UT	NS	605-109
1E32-0255 TO 0267 DELETED IAW DCP 96-0044					

ITEM NO.	MARK NO.	COMPONENT DESCRIPTION	EXAM METHOD	PERIOD SCHED.	ISI ISO SS-305-
		EXAMINATION CATEGORY: R-A[1] (CODE CASE N-578; FORMERLY B-J)			
R2.11	1E51-0001	6″ FLANGE TO PIPE	UT	NS	631-108
R2.11	1E51-0002	6″ PIPE TO VALVE F066	UT	NS	631-108
R2.11	1E51-0003	6″ VALVE F066 TO PIPE	UT	1	631-108
R2.11	1E51-0004	6″ PIPE TO ELBOW	UT	NS	631-108
R2.11	1E51-0005	6″ ELBOW TO PIPE	UT	NS	631-108
R2.11	1E51-0006	6″ PIPE TO ELBOW	UT	NS	631-108
R2.11	1E51-0007	6″ ELBOW TO PIPE	UT	NS	631-108
R2.11	1E51-0008	6″ PIPE TO FLANGE	UT	NS	631-108
R2.11	1E51-0009	6″ FLANGE TO PIPE	UT	NS	631-108
R2.11	1E51-0010	6″ PIPE TO FLANGE	UT	NS	631-108
R2.11	1E51-0011	6″ ELBOW TO PIPE	UT	NS	631-108
R2.11	1E51-0012	6″ PIPE TO ELBOW	UT	NS	631-107
R2.11	1E51-0013	6″ ELBOW TO PIPE	UT	NS	631-107
R2.11	1E51-0014	6″ PIPE TO ELBOW	UT	NS	631-107
R2.11	1E51-0015	6″ ELBOW TO PIPE	UT	NS	631-107
R2.11	1E51-0016	6″ PIPE TO ELBOW	UT	NS	631-107
R2.11	1E51-0017	6″ ELBOW TO PIPE	UT	NS	631-107
R2.11	1E51-0018	6″ PIPE TO ELBOW	UT	NS	631-107
R2.11	1E51-0019	6″ ELBOW TO PIPE	UT	NS	631-107
R2.11	1E51-0019A	6″ PIPE TO PIPE	UT	NS	631-107
R2.11	1E51-0020	6″ PIPE TO P123 PROCESS PIPE	UT	NS	631-107
R2.11	1E51-0021	6″ P123 PROCESS PIPE TO VALVE F065	UT	NS	631-106
R2.11	1E51-0023	6″ VALVE F065 TO PIPE	UT	NS	631-106
R2.11	1E51-0024	6″ PIPE TO ELBOW	UT	2	631-106
R2.11	1E51-0025	6″ ELBOW TO PIPE	UT	2	631-106
R2.11	1E51-0026	6″ PIPE TO ELBOW	UT	NS	631-106
R2.11	1E51-0027	6″ ELBOW TO PIPE	UT	NS	631-106
R1.11	1E51-0028	6″ PIPE TO ELBOW	UT	NS	631-105
R1.11	1E51-0029	6″ ELBOW TO PIPE	UT	2	631-105
R1.11	1E51-0029A	6″ PIPE TO TEE	UT	2	631-105
R1.11	1E51-0029B	6″ PIPE TO TEE	UT	NS	631-105
R1.11	1E51-0030	6″ PIPE TO VALVE F013	UT	NS	631-105
R2.ND	1E51-0120	10″ PIPE TO VALVE F064	UT	NS	632-102
R2.ND	1E51-0121	10″ P422 PROCESS PIPE TO PIPE	UT	2	632-102
R3.ND	1E51-0122	10″ PIPE TO PENETRATION P422 PROCESS PIPE	UT	NS	632-101
R3.ND	1E51-0123	10″ VALVE F063 TO PIPE	UT	NS	632-101
R3.ND	1E51-0124	10″ PIPE TO VALVE F063	UT	NS	632-101
R3.ND	1E51-0125	10″ ELBOW TO PIPE	UT	NS	632-101
R3.ND	1E51-0126	10″ PIPE TO ELBOW	UT	NS	632-101

ITEM NO.	MARK NO.	COMPONENT DESCRIPTION	EXAM METHOD	PERIOD SCHED.	ISI ISO SS-305-
		EXAMINATION CATEGORY: R-A[1] (CODE CASE N-578; FORMERLY B-J)			
R3.ND	1E51-0127	10″ ELBOW TO PIPE	UT	NS	632-101
R3.ND	1E51-0128	10″ PIPE TO ELBOW	UT	NS	632-101
R3.ND	1E51-0128A	10″ PIPE TO PIPE	UT	NS	632-101
R3.ND	1E51-0129	26″ X 10″ CONTOUR NOZZLE TO PIPE	UT	NS	632-101
1G33-0001 TO 0003 DELETED AS THEY ARE EXEMPT IAW IWB-1220(c)					
R3.ND	1G33-0004	2″ PIPE TO ELBOW	UT	NS	671-101
R3.ND	1G33-0005	2″ ELBOW TO PIPE	UT	NS	671-101
R3.ND	1G33-0006	2″ PIPE TO ELBOW	UT	NS	671-101
R3.ND	1G33-0007	2″ ELBOW TO PIPE	UT	NS	671-101
R3.ND	1G33-0007A	2″ PIPE TO TEE	UT	NS	671-101
R3.ND	1G33-0007C	2″ TEE TO PIPE	UT	NS	671-101
R3.ND	1G33-0008	2″ PIPE TO ELBOW	UT	NS	671-101
R3.ND	1G33-0009	2″ ELBOW TO PIPE	UT	NS	671-101
R3.ND	1G33-0010	2″ PIPE TO ELBOW	UT	NS	671-101
R3.ND	1G33-0011	2″ ELBOW TO PIPE	UT	NS	671-101
R3.ND	1G33-0012	2″ PIPE TO TEE	UT	NS	671-101
R3.ND	1G33-0013	2″ TEE TO 2″ X 1 1/4″ REDUCING INSERT	UT	NS	671-101
R3.ND	1G33-0014	2″ TEE TO PIPE	UT	NS	671-101
R3.ND	1G33-0015	2″ PIPE TO ELBOW	UT	NS	671-101
R3.ND	1G33-0016	2″ ELBOW TO PIPE	UT	NS	671-101
R3.ND	1G33-0017	2″ PIPE TO ELBOW	UT	NS	671-102
R3.ND	1G33-0018	2″ ELBOW TO PIPE	UT	NS	671-102
R3.ND	1G33-0019	2″ PIPE TO TEE	UT	NS	671-101
R3.ND	1G33-0020	2″ TEE TO 2″ 1 1/4″ REDUCING INSERT	UT	NS	671-101
R3.ND	1G33-0021	2″ TEE TO PIPE	UT	NS	671-101
R3.ND	1G33-0022	2″ PIPE TO ELBOW	UT	NS	671-102
R3.ND	1G33-0023	2″ ELBOW TO PIPE	UT	NS	671-102
R3.ND	1G33-0024	2″ PIPE TO TEE	UT	NS	671-102
R3.ND	1G33-0024A	2″ TEE TO PIPE	UT	NS	671-102
R3.ND	1G33-0024B	2″ PIPE TO VALVE F029	UT	NS	671-102
R3.ND	1G33-0024C	2″ VALVE F029 TO PIPE	UT	NS	671-102
R3.ND	1G33-0024D	2″ PIPE TO VALVE F030	UT	NS	671-102
R3.ND	1G33-0024E	2″ TEE TO PIPE	UT	NS	671-102
R3.ND	1G33-0024F	2″ PIPE TO ELBOW	UT	NS	671-102
R3.ND	1G33-0025	2″ ELBOW TO PIPE	UT	NS	671-102
R3.ND	1G33-0025A	2″ PIPE TO TEE	UT	NS	671-102
R3.ND	1G33-0025B	2″ TEE TO REDUCER	UT	NS	671-102
R3.ND	1G33-0025C	2″ TEE TO PIPE	UT	NS	671-102

ITEM NO.	MARK NO.	COMPONENT DESCRIPTION	EXAM METHOD	PERIOD SCHED.	ISI ISO SS-305-
		EXAMINATION CATEGORY: R-A[1] (CODE CASE N-578; FORMERLY B-J)			
R3.ND	1G33-0026	2″ PIPE TO 3″ X 2″ REDUCER	UT	NS	671-102
R3.ND	1G33-0027	3″ PIPE TO 3″ X 2″ REDUCER	UT	NS	671-102
R3.ND	1G33-0028	3″ X 3″ X 1 1/2″ TEE TO PIPE	UT	NS	671-102
R3.ND	1G33-0029	3″ PIPE TO TEE	UT	NS	671-102
R3.ND	1G33-0030	3″ ELBOW TO PIPE	UT	NS	671-102
R3.ND	1G33-0031	3″ PIPE TO ELBOW	UT	NS	671-102
R3.ND	1G33-0032	3″ VALVE F101 TO PIPE	UT	NS	671-102
R3.ND	1G33-0033	3″ PIPE TO VALVE F101	UT	NS	671-102
R3.ND	1G33-0034	3″ X 3″ X 1 ½″ TEE TO PIPE	UT	NS	671-102
R3.ND	1G33-0035	1 1/2″ PIPE TO 3″ X 1 1/2″ TEE	UT	NS	671-102
R3.ND	1G33-0036	1 1/2″ ELBOW TO PIPE	UT	NS	671-102
R3.ND	1G33-0037	1 1/2″ PIPE TO ELBOW	UT	NS	671-102
R3.ND	1G33-0038	1 1/2″ VALVE F103 TO PIPE	UT	NS	671-102
R3.ND	1G33-0039	1 1/2″ PIPE TO VALVE F103	UT	NS	671-102
R3.ND	1G33-0040	3″ X 1-1/2″ TEE TO PIPE	UT	NS	671-102
R3.ND	1G33-0041	3″ PIPE TO TEE	UT	NS	671-102
R3.ND	1G33-0042	3″ PIPE TO ELBOW	UT	NS	671-102
R3.ND	1G33-0043	3″ PIPE TO ELBOW	UT	NS	671-102
R3.ND	1G33-0044	3″ ELBOW TO PIPE	UT	NS	671-102
R3.ND	1G33-0045	3″ PIPE TO ELBOW	UT	NS	671-102
R3.ND	1G33-0046	3″ ELBOW TO PIPE	UT	NS	671-102
R3.ND	1G33-0047	3″ PIPE TO ELBOW	UT	NS	671-102
R3.ND	1G33-0048	3″ PIPE TO 6″ X 3″ REDUCER	UT	NS	671-103
R3.ND	1G33-0049	6″ X 3″ REDUCER TO 6″ PIPE	UT	NS	671-103
R3.ND	1G33-0050	6″ X 6″ TEE TO PIPE	UT	NS	671-103
R3.ND	1G33-0051	6″ X 6″ TEE TO PIPE	UT	NS	671-103
R3.ND	1G33-0052	6″ PIPE TO FLOW ELEMENT FE N035	UT	NS	671-103
R3.ND	1G33-0053	6″ FLOW ELEMENT FE N035 TO PIPE	UT	NS	671-103
R3.ND	1G33-0054	6″ PIPE TO ELBOW	UT	NS	671-103
R3.ND	1G33-0055	6″ ELBOW TO PIPE	UT	NS	671-103
R3.ND	1G33-0056	6″ PIPE TO ELBOW	UT	NS	671-103
R3.ND	1G33-0057	6″ ELBOW TO PIPE	UT	NS	671-103
R3.ND	1G33-0058	6″ PIPE TO ELBOW	UT	NS	671-103
R3.ND	1G33-0059	6″ ELBOW TO PIPE	UT	NS	671-103
R3.ND	1G33-0060	6″ PIPE TO VALVE F001	UT	NS	671-103
R3.ND	1G33-0061	6″ VALVE F001 TO PIPE	UT	NS	671-103
R3.ND	1G33-0062	6″ PIPE TO P131 PROCESS PIPE	UT	NS	671-103
R3.ND	1G33-0063	6″ P131 PROCESS PIPE TO PIPE (HIGH STRESS & USAGE)	UT	3	671-104
R3.ND	1G33-0064	6″ PIPE TO VALVE F004	UT	NS	671-104

ITEM NO.	MARK NO.	COMPONENT DESCRIPTION	EXAM METHOD	PERIOD SCHED.	ISI ISO SS-305-
		EXAMINATION CATEGORY: R-A[1] (CODE CASE N-578; FORMERLY B-J)			
R3.ND	1G33-0065	6" PIPE TO TEE	UT	NS	671-103
R3.ND	1G33-0066	4" X 6" REDUCER TO PIPE	UT	NS	671-103
R3.ND	1G33-0067	4" PIPE TO REDUCER	UT	NS	671-103
R3.ND	1G33-0067A	4" PIPE TO PIPE	UT	NS	671-103
R3.ND	1G33-0068	4" VALVE F102 TO PIPE	UT	NS	671-103
R3.ND	1G33-0069	4" ELBOW TO VALVE F102	UT	NS	671-103
R3.ND	1G33-0070	4" PIPE TO ELBOW	UT	NS	671-103
R3.ND	1G33-0073	4" BENT PIPE TO PIPE	UT	NS	671-105
R3.ND	1G33-0075	4" X 4" TEE TO PIPE	UT	NS	671-105
R3.ND	1G33-0076	4" X 4" TEE TO PIPE	UT	NS	671-105
R3.ND	1G33-0078	4" PIPE TO BENT PIPE	UT	NS	671-105
R3.ND	1G33-0081	4" PIPE TO VALVE F106	UT	NS	671-105
R3.ND	1G33-0082	4" VALVE F106 TO PIPE	UT	NS	671-105
R3.ND	1G33-0083	4" PIPE TO ELBOW	UT	NS	671-105
R3.ND	1G33-0084	4" ELBOW TO PIPE	UT	NS	671-105
R3.ND	1G33-0085	4" ELBOW TO PIPE	UT	NS	671-105
R3.ND	1G33-0086	4" PIPE TO ELBOW	UT	NS	671-105
R3.ND	1G33-0088	4" PIPE TO TEE	UT	NS	671-105
R3.ND	1G33-0090	4" PIPE TO BENT PIPE	UT	NS	671-106
R3.ND	1G33-0091	4" PIPE TO PIPE	UT	NS	671-106
R3.ND	1G33-0092	4" BENT PIPE TO PIPE	UT	NS	671-106
R3.ND	1G33-0094	4" BENT PIPE TO PIPE	UT	NS	671-106
R3.ND	1G33-0096	4" BENT PIPE TO PIPE	UT	NS	671-106
R3.ND	1G33-0097	4" PIPE TO PIPE	UT	NS	671-106
R3.ND	1G33-0099	4" PIPE TO BENT PIPE	UT	NS	671-106
R3.ND	1G33-0101	4" PIPE TO BENT PIPE	UT	3*	671-107
R3.ND	1G33-0103	4" PIPE TO BENT PIPE	UT	NS	671-107
R3.ND	1G33-0107	4" VALVE F100 TO PIPE	UT	NS	671-107
R3.ND	1G33-0108	4" PIPE TO VALVE F100	UT	NS	671-107
R3.ND	1G33-0109	4" ELBOW TO PIPE	UT	NS	671-107
R3.ND	1G33-0110	4" PIPE TO ELBOW	UT	NS	671-107
R3.ND	1G33-0111	4" ELBOW TO PIPE	UT	NS	671-107
R3.ND	1G33-0112	4" PIPE TO ELBOW	UT	NS	671-107
R3.ND	1G33-0144	4" PIPE TO HALF COUPLING BRANCH CONNECTION	UT	NS	671-107
R3.ND	1G33-0145	2" HALF COUPLING TO PIPE	UT	NS	671-107
R3.ND	1G33-0146	2" PIPE TO ELBOW	UT	NS	671-107
R3.ND	1G33-0147	2" ELBOW TO PIPE	UT	NS	671-107
R3.ND	1G33-0148	2" PIPE TO VALVE F505B	UT	NS	671-107
R3.ND	1G33-0149	2" VALVE F505A TO PIPE	UT	NS	671-107
R3.ND	1G33-0150	2" PIPE TO VALVE F506A	UT	NS	671-107

ITEM NO.	MARK NO.	COMPONENT DESCRIPTION	EXAM METHOD	PERIOD SCHED.	ISI ISO SS-305-
		EXAMINATION CATEGORY: R-A[1] (CODE CASE N-578; FORMERLY B-J)			
R3.ND	1G33-0151	2" HALF COUPLING BRANCH CONNECTION	UT	NS	671-105
R3.ND	1G33-0152	2" HALF COUPLING TO PIPE	UT	NS	671-105
R3.ND	1G33-0153	2" PIPE TO ELBOW	UT	NS	671-105
R3.ND	1G33-0154	2" ELBOW TO PIPE	UT	NS	671-105
R3.ND	1G33-0155	2" PIPE TO VALVE F505B	UT	NS	671-105
R3.ND	1G33-0156	2" VALVE F505 TO PIPE	UT	NS	671-105
R3.ND	1G33-0157	2" PIPE TO VALVE F506B	UT	NS	671-105
R2.11	1N22-0026	VALVE F022C TO 2" PIPE	UT	NS	121-102
R2.11	1N22-0027	2" PIPE TO ELBOW	UT	NS	121-102
R2.11	1N22-0028	2" ELBOW TO PIPE	UT	NS	121-102
R2.11	1N22-0029	2" PIPE TO ELBOW	UT	NS	121-102
R2.11	1N22-0030	2" ELBOW TO PIPE	UT	NS	121-102
R2.11	1N22-0030A	2" PIPE TO COUPLING	UT	NS	121-102
R2.11	1N22-0030B	2" COUPLING TO PIPE	UT	NS	121-102
R2.11	1N22-0031	2" PIPE TO ELBOW	UT	NS	121-102
R2.11	1N22-0031A	2" TEE TO PIPE	UT	NS	121-102
R2.11	1N22-0031B	2" PIPE TO TEE	UT	NS	121-102
R2.11	1N22-0031C	2" PIPE TO COUPLING	UT	NS	121-102
R2.11	1N22-0032	2" ELBOW TO PIPE	UT	NS	121-102
R2.11	1N22-0033	2" PIPE TO ELBOW	UT	NS	121-102
R2.11	1N22-0034	2" ELBOW TO PIPE	UT	NS	121-102
R2.11	1N22-0035	2" PIPE TO ELBOW	UT	NS	121-102
R2.11	1N22-0036	2" ELBOW TO PIPE	UT	NS	121-102
R2.11	1N22-0037	2" PIPE TO 3" X 3" X 2" TEE	UT	3	121-102
R2.11	1N22-0059	VALVE F022D TO 2" PIPE	UT	NS	121-101
R2.11	1N22-0060	2" PIPE TO ELBOW	UT	NS	121-101
R2.11	1N22-0061	2" ELBOW TO PIPE	UT	NS	121-101
R2.11	1N22-0062	2" PIPE TO ELBOW	UT	NS	121-101
R2.11	1N22-0063	2" ELBOW TO PIPE	UT	NS	121-101
R2.11	1N22-0064	2" PIPE TO ELBOW	UT	NS	121-101
R2.11	1N22-0065	2" ELBOW TO PIPE	UT	NS	121-101
R2.11	1N22-0066	2" PIPE TO 2" X 3" REDUCER	UT	NS	121-101
R2.11	1N22-0067	2" X 3" REDUCER TO 3" PIPE	UT	3	121-101
R2.11	1N22-0068	3" PIPE TO 3" X 3" X 2" TEE	UT	3	121-101
R2.11	1N22-0069	3" X 3" X 2" TEE TO 3" PIPE	UT	NS	121-103
R2.11	1N22-0070	3" PIPE TO 3" X 3" X 2" TEE	UT	NS	121-103
R2.11	1N22-0071	3" X 3" X 2" TEE TO 3" PIPE	UT	NS	121-103
R2.11	1N22-0072	3" PIPE TO 3" X 3" X 2" TEE	UT	NS	121-103
R2.11	1N22-0073	3" X 3" X 2" TEE TO 3" PIPE	UT	3	121-103

ITEM NO.	MARK NO.	COMPONENT DESCRIPTION	EXAM METHOD	PERIOD SCHED.	ISI ISO SS-305-
		EXAMINATION CATEGORY: R-A[1] (CODE CASE N-578; FORMERLY B-J)			
R2.11	1N22-0074	3" PIPE TO VALVE F016	UT	NS	121-103
R3.11	1N22-0075	3" VALVE F016 TO P423	UT	NS	121-103
R1.11	1N22-0076	P423 TO 3" PIPE	UT	3	121-103
R1.11	1N22-0077	3" PIPE TO VALVE F019	UT	NS	121-103
R2.11	1N22-0103	VALVE F022B TO 2" PIPE	UT	NS	121-101
R2.11	1N22-0104	2" PIPE TO ELBOW	UT	NS	121-101
R2.11	1N22-0105	2" ELBOW TO PIPE	UT	NS	121-101
R2.11	1N22-0106	2" PIPE TO ELBOW	UT	3	121-101
R2.11	1N22-0107	2" ELBOW TO PIPE	UT	3	121-101
R2.11	1N22-0108	2" PIPE TO ELBOW	UT	NS	121-101
R2.11	1N22-0108A	2" ELBOW TO PIPE	UT	NS	121-101
R2.11	1N22-0108B	2" PIPE TO ELBOW	UT	NS	121-101
R2.11	1N22-0109	2" ELBOW TO PIPE	UT	NS	121-101
R2.11	1N22-0109A	2" PIPE TO COUPLING	UT	NS	121-101
R2.11	1N22-0109B	2" COUPLING TO PIPE	UT	NS	121-101
R2.11	1N22-0110	2" PIPE TO ELBOW	UT	NS	121-101
R2.11	1N22-0111	2" ELBOW TO PIPE	UT	NS	121-101
R2.11	1N22-0112	2" PIPE TO ELBOW	UT	NS	121-101
R2.11	1N22-0113	2" ELBOW TO PIPE	UT	NS	121-101
R2.11	1N22-0114	2" PIPE TO ELBOW	UT	NS	121-101
R2.11	1N22-0115	2" ELBOW TO PIPE	UT	NS	121-101
R2.11	1N22-0116	2" PIPE TO 3" X 3" X 2" TEE	UT	NS	121-101
R2.11	1N22-0136	VALVE F022A TO 2" PIPE	UT	NS	121-102
R2.11	1N22-0137	2" PIPE TO ELBOW	UT	NS	121-102
R2.11	1N22-0138	2" ELBOW TO PIPE	UT	NS	121-102
R2.11	1N22-0139	2" PIPE TO ELBOW	UT	NS	121-102
R2.11	1N22-0140	2" ELBOW TO PIPE	UT	NS	121-102
R2.11	1N22-0141	2" PIPE TO ELBOW	UT	NS	121-102
R2.11	1N22-0142	2" ELBOW TO PIPE	UT	NS	121-102
R2.11	1N22-0143	2" PIPE TO ELBOW	UT	NS	121-102
R2.11	1N22-0144	2" ELBOW TO PIPE	UT	NS	121-102
R2.11	1N22-0145	2" PIPE TO ELBOW	UT	NS	121-102
R2.11	1N22-0146	2" ELBOW TO PIPE	UT	NS	121-102
R2.11	1N22-0147	2" PIPE TO 3" X 3" X 2" TEE	UT	3	121-102
R2.11	1N27-0001	20" PIPE TO CAP	UT	NS	082-102
R2.11	1N27-0002	20" PIPE TO PIPE	UT	NS	082-102
R2.11	1N27-0003	20" ELBOW TO PIPE	UT	NS	082-102
R2.11	1N27-0004	20" PIPE TO ELBOW	UT	NS	082-102
R2.11	1N27-0005	20" VALVE F560A TO PIPE	UT	NS	082-102

ITEM NO.	MARK NO.	COMPONENT DESCRIPTION	EXAM METHOD	PERIOD SCHED.	ISI ISO SS-305-
		EXAMINATION CATEGORY: R-A[1] (CODE CASE N-578; FORMERLY B-J)			
R2.11	1N27-0006	20" PIPE TO VALVE F560A	UT	NS	082-102
R2.11	1N27-0007	20" VALVE F559A TO PIPE	UT	NS	082-102
R2.11	1N27-0008	20" PENETRATION P121 PROCESS PIPE TO VALVE F559A	UT	NS	082-102
R1.11	1N27-0009	20" VALVE F032A TO PENETRATION P121 PROCESS PIPE	UT	1	082-101
R2.11	1N27-0015	20" PIPE TO CAP	UT	NS	082-105
R2.11	1N27-0016	12" PIPE TO PIPE	UT	NS	082-105
R2.11	1N27-0017	20" ELBOW TO PIPE	UT	NS	082-105
R2.11	1N27-0018	20" PIPE TO ELBOW	UT	NS	082-105
R2.11	1N27-0019	20" VALVE F560B TO PIPE	UT	NS	082-105
R2.11	1N27-0020	20" PIPE TO VALVE F560B	UT	NS	082-105
R2.11	1N27-0021	20" VALVE F559B TO PIPE	UT	NS	082-105
R2.11	1N27-0022	20" PENETRATION P414 PROCESS PIPE TO VALVE F559B	UT	2	082-105
R2.11	1N27-0023	20" VALVE F032B TO PENETRATION P414 PROCESS PIPE	UT	NS	082-104
R2.11	1N27-0029	20" PIPE TO 14" SWEEPOLET	UT	NS	082-102
R2.11	1N27-0030	14" SWEEPOLET TO 14" X 12" REDUCER	UT	NS	082-102
R2.11	1N27-0031	14" X 12" REDUCER TO PIPE REDUCER	UT	NS	082-102
R2.11	1N27-0031A	12" PIPE TO PIPE	UT	NS	082-102
R2.11	1N27-0032	12" PIPE TO ELBOW	UT	NS	082-103
R2.11	1N27-0033	12" ELBOW TO PIPE	UT	NS	082-103
R2.11	1N27-0034	12" PIPE TO N4C SAFE-END	UT	1	082-103
R2.11	1N27-0035	20" PIPE TO 14" SWEEPOLET (HIGH STRESS & USAGE)	UT	NS	082-102
R2.11	1N27-0036	14" SWEEPOLET TO 14" X 12" REDUCER	UT	NS	082-102
R2.11	1N27-0037	14" X 12" REDUCER TO PIPE	UT	NS	082-102
R2.11	1N27-0038	12" PIPE TO ELBOW	UT	NS	082-103
R2.11	1N27-0039	12" ELBOW TO PIPE	UT	NS	082-103
R2.11	1N27-0040	12" PIPE TO N4B SAFE-END	UT	NS	082-103
R2.11	1N27-0041	20" PIPE TO 14" SWEEPOLET	UT	NS	082-102
R2.11	1N27-0042	14" SWEEPOLET TO 14" PIPE	UT	NS	082-102
R2.11	1N27-0043	12" PIPE TO ELBOW	UT	NS	082-102
R2.11	1N27-0044	14" ELBOW TO PIPE	UT	NS	082-102
R3.ND	1N27-0045	14" PIPE TO 14" X 12" ELBOW	UT	NS	082-102
R3.ND	1N27-0046	14" X 12" ELBOW TO 12" PIPE	UT	NS	082-103
R3.ND	1N27-0046A	12" PIPE TO PIPE	UT	NS	082-103
R2.11	1N27-0047	12" PIPE TO ELBOW	UT	NS	082-103
R2.11	1N27-0048	12" ELBOW TO PIPE	UT	NS	082-103
R2.11	1N27-0049	12" PIPE TO N4A SAFE-END	UT	1	082-103
R2.11	1N27-0050	20" PIPE TO 14" SWEEPOLET	UT	NS	082-105
R2.11	1N27-0051	14" SWEEPOLET TO 14" X 12" REDUCER	UT	NS	082-105
R2.11	1N27-0052	14" X 12" REDUCER TO PIPE	UT	NS	082-105
R2.11	1N27-0053	12" PIPE TO ELBOW	UT	2	082-106

ITEM NO.	MARK NO.	COMPONENT DESCRIPTION	EXAM METHOD	PERIOD SCHED.	ISI ISO SS-305-
		EXAMINATION CATEGORY: R-A[1] (CODE CASE N-578; FORMERLY B-J)			
R2.11	1N27-0054	12" ELBOW TO PIPE	UT	2	082-106
R2.11	1N27-0055	12" PIPE TO N4D SAFE-END	UT	NS	082-106
R2.11	1N27-0056	20" PIPE TO 14" SWEEPOLET (HIGH STRESS & USAGE)	UT	NS	082-105
R2.11	1N27-0057	14" SWEEPOLET TO 14" X 12" REDUCER	UT	NS	082-105
R2.11	1N27-0058	14" X 12" REDUCER TO PIPE	UT	NS	082-105
R2.11	1N27-0058A	12" PIPE TO PIPE	UT	NS	082-105
R2.11	1N27-0059	12" PIPE TO ELBOW	UT	NS	082-106
R2.11	1N27-0060	12" ELBOW TO PIPE	UT	NS	082-106
R2.11	1N27-0061	12" PIPE TO N4E SAFE-END	UT	NS	082-106
R2.11	1N27-0062	20" PIPE TO 14" SWEEPOLET	UT	NS	082-105
R2.11	1N27-0063	14" SWEEPOLET TO PIPE	UT	NS	082-105
R2.11	1N27-0064	12" PIPE TO ELBOW	UT	2	082-105
R2.11	1N27-0065	12" ELBOW TO PIPE	UT	NS	082-105
R2.11	1N27-0066	14" PIPE TO 14" X 12" ELBOW	UT	NS	082-105
R2.11	1N27-0067	14" X 12" REDUCING ELBOW TO PIPE	UT	NS	082-106
R2.11	1N27-0067A	12" PIPE TO PIPE	UT	NS	082-106
R2.11	1N27-0068	12" PIPE TO ELBOW	UT	NS	082-106
R2.11	1N27-0069	12" ELBOW TO PIPE	UT	NS	082-106
R2.11	1N27-0070	12" PIPE TO N4F SAFE-END	UT	NS	082-106

[1] - The Risk-Informed ISI Program is drafted and will be submitted for approval prior to the end of the 1st period of the 3rd Interval. The proposed scheduling of the following components is based on the previous Risk-Informed Element Selection, which is not expected to change. These exams will not be credited until a Safety Evaluation is received from the regulatory authority based on the submitted "Request for Alternative", IR-49.

* Welds selected based on IGSCC (i.e., NUREG 0313, IGSCC Category C or E) and/or Defense-in-Depth considerations rather than being a Risk-Informed selection.

		EXAMINATION CATEGORY: B-K			
B10.10	1B13-CG	BOTTOM HEAD TO SKIRT	MT	1,2,3*	006-004
B10.20	1B21-G101A-WA	INTEGRAL WELDED ATTACHMENT FOR RIGID GUIDE	MT	NS	605-101
B10.20	1B21-G101B-WA	INTEGRAL WELDED ATTACHMENT FOR RIGID GUIDE	MT	NS	605-102
B10.20	1B21-G101C-WA	INTEGRAL WELDED ATTACHMENT FOR RIGID GUIDE,	MT	NS	605-103
B10.20	1B21-G101D-WA	INTEGRAL WELDED ATTACHMENT FOR RIGID GUIDE	MT	NS	605-104
B10.20	1B21-H0442-WA	INTEGRAL WELDED ATTACHMENT FOR VARIABLE SPRING	MT	NS	605-105
B10.20	1B21-H0446-WA	INTEGRAL WELDED ATTACHMENT FOR SNUBBER	MT	NS	605-106
B10.20	1B21-H0493-WA	INTEGRAL WELDED ATTACHMENT FOR RIGID GUIDE	MT	NS	605-105
B10.20	1B21-P122-WA	P122 FLUED HEAD FITTING TO PROCESS PIPE ATTACHMENT WELD	MT	NS	605-109
B10.20	1B21-P124-WA	P124 FLUED HEAD FITTING TO PROCESS PIPE ATTACHMENT WELD	MT	3	605-107
B10.20	1B21-P415-WA	P415 FLUED HEAD FITTING TO PROCESS PIPE ATTACHMENT WELD	MT	NS	605-110
B10.20	1B21-P416-WA	P416 FLUED HEAD FITTING TO PROCESS PIPE ATTACHMENT WELD	MT	NS	605-108

ITEM NO.	MARK NO.	COMPONENT DESCRIPTION	EXAM METHOD	PERIOD SCHED.	ISI ISO SS-305-
		EXAMINATION CATEGORY: B-K			
B10.20	1B33-H305A-WA	INTEGRAL WELDED ATTACHMENT FOR VARIABLE SPRING	PT	1	602-102
B10.20	1B33-H305B-WA	INTEGRAL WELDED ATTACHMENT FOR VARIABLE SPRING	PT	NS	602-104
B10.20	1B33-H306A-WA	INTEGRAL WELDED ATTACHMENT FOR VARIABLE SPRING	PT	NS	602-102
B10.20	1B33-H306B-WA	INTEGRAL WELDED ATTACHMENT FOR VARIABLE SPRING	PT	NS	602-104
B10.30	1B33-S372A-WA	PUMP WELDED ATTACHMENT	PT	1	602-102
B10.30	1B33-S372B-WA	PUMP WELDED ATTACHMENT	PT	NS	602-104
B10.30	1B33-S373A-WA	PUMP WELDED ATTACHMENT	PT	NS	602-102
B10.30	1B33-S373B-WA	PUMP WELDED ATTACHMENT	PT	NS	602-104
B10.30	1B33-S374A-WA	PUMP WELDED ATTACHMENT	PT	NS	602-102
B10.30	1B33-S374B-WA	PUMP WELDED ATTACHMENT	PT	NS	602-104
B10.30	1B33-S375A-WA	PUMP WELDED ATTACHMENT	PT	NS	602-102
B10.30	1B33-S375B-WA	PUMP WELDED ATTACHMENT	PT	NS	602-104
B10.20	1C41-PRB4031-WA	PRB4031 ANCHOR ATTACHMENT TO PROCESS PIPE	PT	NS	691-102
B10.20	1E12-H0100-WA	INTEGRAL WELDED ATTACHMENT FOR VARIABLE SPRING	MT	NS	642-117
B10.20	1E12-P411-WA	P411 FLUED HEAD FITTING TO PROCESS PIPE ATTACHMENT WELD	MT	NS	642-135
B10.20	1E12-P421-WA	P421 FLUED HEAD FITTING TO PROCESS PIPE ATTACHMENT WELD	MT	NS	642-101
B10.20	1E12-PRB2035-WA	PRB2035 FLUED HEAD FITTING TO PROCESS PIPE ATT.WELD	MT	2	642-143
B10.20	1E12-PRB2036-WA	PRB2036 FLUED HEAD FITTING TO PROCESS PIPE ATT.WELD	MT	NS	642-139
B10.20	1E12-PRB2044-WA	PRB2044 FLUED HEAD FITTING TO PROCESS PIPE ATT.WELD	MT	NS	642-126
B10.20	1E21-P112-WA	P112 FLUED HEAD FITTING TO PROCESS PIPE ATTACHMENT WELD	MT	NS	705-109
B10.20	1E21-PRB3046-WA	PRB3046 FLUED HEAD FITTING TO PROCESS PIPE ATT. WELD	MT	NS	705-110
B10.20	1E22-P410-WA	P410 FLUED HEAD FITTING TO PROCESS PIPE ATTACHMENT WELD	MT	NS	701-109
B10.20	1E22-PRB3052-WA	PRB3052 FLUED HEAD FITTING TO PROCESS PIPE ATTACHMENT WELD	MT	NS	701-110
B10.20	1E51-H0102-WA	INTEGRAL WELDED ATTACHMENT FOR RIGID SUPPORT	MT	NS	632-101
B10.20	1E51-H0150-WA	INTEGRAL WELDED ATTACHMENT FOR VARIABLE SPRING	MT	NS	631-108
B10.20	1E51-P123-WA	P123 FLUED HEAD FITTING TO PROCESS PIPE ATTACHMENT WELD	MT	NS	631-106
B10.20	1E51-P422-WA	P422 FLUED HEAD FITTING TO PROCESS PIPE ATTACHMENT	MT	NS	632-102
B10.20	1G33-P131-WA	P131 FLUED HEAD FITTING TO PROCESS PIPE ATTACHMENT	MT	NS	671-104
B10.20	1G33-H0080-WA	INTEGRAL WELDED ATTACHMENT FOR VARIABLE SPRING	MT	NS	671-103
B10.20	1N22-P423-WA	P423 FLUED HEAD FITTING TO PROCESS PIPE ATTACHMENT WELD	MT	NS	121-103
B10.20	1N27-H0010-WA	INTEGRAL WELDED ATTACHMENT FOR VARIABLE SPRING	MT	NS	082-103
B10.20	1N27-H0022-WA	INTEGRAL WELDED ATTACHMENT FOR VARIABLE SPRING	MT	NS	082-106
B10.20	1N27-H0029-WA	INTEGRAL WELDED ATTACHMENT FOR RIGID GUIDE	MT	NS	082-102
B10.20	1N27-H0030-WA	INTEGRAL WELDED ATTACHMENT FOR RIGID GUIDE	MT	NS	082-105
B10.20	1N27-P121-WA	P121 FLUED HEAD FITTING TO PROCESS PIPE ATTACHMENT WELD	MT	NS	082-101
B10.20	1N27-P414-WA	P414 FLUED HEAD FITTING TO PROCESS PIPE ATTACHMENT WELD	MT	3	082-104
B10.40		DOES NOT EXIST			

* 1/3 OR 120 degrees of the weld examined each period.

ITEM NO.	MARK NO.	COMPONENT DESCRIPTION	EXAM METHOD	PERIOD SCHED.	ISI ISO SS-305-
		EXAMINATION CATEGORY: B-L-1			
B12.10		NOT APPLICABLE TO PNPP			
		EXAMINATION CATEGORY: B-L-2			
B12.20	1B33-C001A-IS	PUMP C001A INTERNAL SURFACE	VT-3	SR	602-102
B12.20	1B33-C001B-IS	PUMP C001B INTERNAL SURFACE	VT-3	SR	602-104
		EXAMINATION CATEGORY: B-M-1			
B12.30	1G33-F0101-SEAM	3" GATE VALVE, BODY WELD (GROUPING NUMBER IX)	PT	NS*	671-102
B12.40	1E12-F0019-SEAM	6" CHECK VALVE, BODY WELD (GROUPING NUMBER XIV)	UT	NS*	642-122
B12.40	1E12-F0039A-SEAM	12" GATE VALVE, BODY WELD (GROUPING NUMBER XII)	UT	NS*	642-125
B12.40	1E12-F0039B-SEAM	12" GATE VALVE, BODY WELD (GROUPING NUMBER XII)	UT	NS*	642-141
B12.40	1E12-F0039C-SEAM	12" GATE VALVE, BODY WELD (GROUPING NUMBER XII)	UT	NS*	642-145
B12.40	1E12-F0042A-SEAM	12" GATE VALVE, BODY WELD (GROUPING NUMBER XII)	UT	NS*	642-126
B12.40	1E12-F0042B-SEAM	12" GATE VALVE, BODY WELD (GROUPING NUMBER XII)	UT	NS*	642-137
B12.40	1E12-F0042C-SEAM	12" GATE VALVE, BODY WELD (GROUPING NUMBER XII)	UT	NS*	642-134
B12.40	1E21-F0005-SEAM	12" GATE VALVE, BODY WELD (GROUPING NUMBER XVI)	UT	NS*	705-108
B12.40	1E21-F0007-SEAM	12" GATE VALVE, BODY WELD (GROUPING NUMBER XVI)	UT	NS*	705-111
B12.40	1E22-F0036-SEAM	12" GATE VALVE, BODY WELD (GROUPING NUMBER XVIII)	UT	NS*	701-111
B12.40	1E51-F0013-SEAM	6" GATE VALVE, BODY WELD (GROUPING NUMBER XXI)	UT	NS*	631-105
B12.40	1E51-F0063-SEAM	10" GATE VALVE, BODY WELD (GROUPING NUMBER XXII)	UT	NS*	632-101
B12.40	1E51-F0064-SEAM	10" GATE VALVE, BODY WELD (GROUPING NUMBER XXII)	UT	NS*	632-102
B12.40	1G33-F0001-SEAM	6" GATE VALVE, BODY WELD (GROUPING NUMBER VIII)	UT	NS*	671-103
B12.40	1G33-F0004-SEAM	6" GATE VALVE, BODY WELD (GROUPING NUMBER VIII)	UT	NS*	671-104
B12.40	1G33-F0100-SEAM	4" GATE VALVE, BODY WELD (GROUPING NUMBER IX)	UT	NS*	671-107
B12.40	1G33-F0106-SEAM	4" GATE VALVE, BODY WELD (GROUPING NUMBER IX)	UT	NS*	671-105

* Not Scheduled in accordance with IR-043.

		EXAMINATION CATEGORY: B-M-2			
B12.50	1B21-F0022A-IS	26" GLOBE, MSIV, INTERNAL SURFACE (GROUPING NUMBER II)	VT-3	SR	605-101
B12.50	1B21-F0022B-IS	26" GLOBE, MSIV, INTERNAL SURFACE (GROUPING NUMBER II)	VT-3	SR	605-102
B12.50	1B21-F0022C-IS	26" GLOBE, MSIV, INTERNAL SURFACE (GROUPING NUMBER II)	VT-3	SR	605-103
B12.50	1B21-F0022D-IS	26" GLOBE, MSIV, INTERNAL SURFACE (GROUPING NUMBER II)	VT-3	SR	605-104
B12.50	1B21-F0028A-IS	26" GLOBE, MSIV, INTERNAL SURFACE (GROUPING NUMBER II)	VT-3	SR	605-107
B12.50	1B21-F0028B-IS	26" GLOBE, MSIV, INTERNAL SURFACE (GROUPING NUMBER II)	VT-3	SR	605-108
B12.50	1B21-F0028C-IS	26" GLOBE, MSIV, INTERNAL SURFACE (GROUPING NUMBER II)	VT-3	SR	605-109

ITEM NO.	MARK NO.	COMPONENT DESCRIPTION	EXAM METHOD	PERIOD SCHED.	ISI ISO SS-305-
		EXAMINATION CATEGORY: B-M-2			
B12.50	1B21-F0028D-IS	26" GLOBE, MSIV, INTERNAL SURFACE (GROUPING NUMBER II)	VT-3	SR	605-110
B12.50	1B21-F0032A-IS	20" CHECK VALVE, INTERNAL SURFACE (GROUPING NUMBER III)	VT-3	SR	082-101
B12.50	1B21-F0032B-IS	20" CHECK VALVE, INTERNAL SURFACE (GROUPING NUMBER III)	VT-3	SR	082-104
B12.50	1B21-F0041A-IS	SRV, INTERNAL SURFACE (GROUPING NUMBER I)	VT-3	1,2,or3*	605-101
B12.50	1B21-F0041B-IS	SRV, INTERNAL SURFACE (GROUPING NUMBER I)	VT-3	NS	605-102
B12.50	1B21-F0041C-IS	SRV, INTERNAL SURFACE (GROUPING NUMBER I)	VT-3	NS	605-103
B12.50	1B21-F0041D-IS	SRV, INTERNAL SURFACE (GROUPING NUMBER I)	VT-3	NS	605-104
B12.50	1B21-F0041E-IS	SRV, INTERNAL SURFACE (GROUPING NUMBER I)	VT-3	NS	605-101
B12.50	1B21-F0041F-IS	SRV, INTERNAL SURFACE (GROUPING NUMBER I)	VT-3	NS	605-102
B12.50	1B21-F0041G-IS	SRV, INTERNAL SURFACE (GROUPING NUMBER I)	VT-3	NS	605-103
B12.50	1B21-F0041K-IS	SRV, INTERNAL SURFACE (GROUPING NUMBER I)	VT-3	NS	605-102
B12.50	1B21-F0047B-IS	SRV, INTERNAL SURFACE (GROUPING NUMBER I)	VT-3	NS	605-102
B12.50	1B21-F0047C-IS	SRV, INTERNAL SURFACE (GROUPING NUMBER I)	VT-3	NS	605-103
B12.50	1B21-F0047D-IS	SRV, INTERNAL SURFACE (GROUPING NUMBER I)	VT-3	NS	605-104
B12.50	1B21-F0047F-IS	SRV, INTERNAL SURFACE (GROUPING NUMBER I)	VT-3	NS	605-102
B12.50	1B21-F0047G-IS	SRV, INTERNAL SURFACE (GROUPING NUMBER I)	VT-3	NS	605-103
B12.50	1B21-F0047H-IS	SRV, INTERNAL SURFACE (GROUPING NUMBER I)	VT-3	NS	605-104
B12.50	1B21-F0051A-IS	SRV, INTERNAL SURFACE (GROUPING NUMBER I)	VT-3	NS	605-101
B12.50	1B21-F0051B-IS	SRV, INTERNAL SURFACE (GROUPING NUMBER I)	VT-3	NS	605-102
B12.50	1B21-F0051C-IS	SRV, INTERNAL SURFACE (GROUPING NUMBER I)	VT-3	NS	605-103
B12.50	1B21-F0051D-IS	SRV, INTERNAL SURFACE (GROUPING NUMBER I)	VT-3	NS	605-104
B12.50	1B21-F0051G-IS	SRV, INTERNAL SURFACE (GROUPING NUMBER I)	VT-3	NS	605-103
B12.50	1B33-F0023A-IS	22" GATE VALVE, INTERNAL SURFACE (GROUPING NUMBER V)	VT-3	SR**	602-102
B12.50	1B33-F0023B-IS	22" GATE VALVE, INTERNAL SURFACE (GROUPING NUMBER V)	VT-3	SR**	602-104
B12.50	1B33-F0060A-IS	24" BALL VALVE, INTERNAL SURFACE (GROUPING NUMBER VI)	VT-3	SR**	602-102
B12.50	1B33-F0060B-IS	24" BALL VALVE, INTERNAL SURFACE (GROUPING NUMBER VI)	VT-3	SR**	602-104
B12.50	1B33-F0067A-IS	24" GATE VALVE, INTERNAL SURFACE (GROUPING NUMBER VII)	VT-3	SR**	602-102
B12.50	1B33-F0067B-IS	24" GATE VALVE, INTERNAL SURFACE (GROUPING NUMBER VII)	VT-3	SR**	602-104
B12.50	1E12-F0008-IS	20" GATE VALVE, INTERNAL SURFACE (GROUPING NUMBER XI)	VT-3	SR**	642-101
B12.50	1E12-F0009-IS	20" GATE VALVE, INTERNAL SURFACE (GROUPING NUMBER XI)	VT-3	SR**	642-117
B12.50	1E12-F0010-IS	20" GATE VALVE, INTERNAL SURFACE (GROUPING NUMBER XI)	VT-3	SR**	642-117
B12.50	1E12-F0019-IS	6" CHECK VALVE, INTERNAL SURFACE (GROUPING NUMBER XIV)	VT-3	SR**	642-122
B12.50	1E12-F0023-IS	6" GLOBE VALVE, INTERNAL SURFACE (GROUPING NUMBER XV)	VT-3	SR**	642-122
B12.50	1E12-F0039A-IS	12" GATE VALVE, INTERNAL SURFACE (GROUPING NUMBER XII)	VT-3	SR**	642-125
B12.50	1E12-F0039B-IS	12" GATE VALVE, INTERNAL SURFACE (GROUPING NUMBER XII)	VT-3	SR**	642-141
B12.50	1E12-F0039C-IS	12" GATE VALVE, INTERNAL SURFACE (GROUPING NUMBER XII)	VT-3	SR**	642-145
B12.50	1E12-F0041A-IS	12" CHECK VALVE, INTERNAL SURFACE (GROUPING NUMBER XIII)	VT-3	SR**	642-125
B12.50	1E12-F0041B-IS	12" CHECK VALVE, INTERNAL SURFACE (GROUPING NUMBER XIII)	VT-3	SR**	642-141
B12.50	1E12-F0041C-IS	12" CHECK VALVE, INTERNAL SURFACE (GROUPING NUMBER XIII)	VT-3	SR**	642-145

ITEM NO.	MARK NO.	COMPONENT DESCRIPTION	EXAM METHOD	PERIOD SCHED.	ISI ISO SS-305-
		EXAMINATION CATEGORY: B-M-2			
B12.50	1E12-F0042A-IS	12" GATE VALVE, INTERNAL SURFACE (GROUPING NUMBER XII)	VT-3	SR**	642-126
B12.50	1E12-F0042B-IS	12" GATE VALVE, INTERNAL SURFACE (GROUPING NUMBER XII)	VT-3	SR**	642-137
B12.50	1E12-F0042C-IS	12" GATE VALVE, INTERNAL SURFACE (GROUPING NUMBER XII)	VT-3	SR**	642-134
B12.50	1E21-F0005-IS	12" GATE VALVE, INTERNAL SURFACE (GROUPING NUMBER XVI)	VT-3	SR**	705-113
B12.50	1E21-F0006-IS	12" CHECK VALVE, INTERNAL SURFACE (GROUPING NUMBER XVII)	VT-3	SR**	705-111
B12.50	1E21-F0007-IS	12" GATE VALVE, INTERNAL SURFACE (GROUPING NUMBER XVI)	VT-3	SR**	705-111
B12.50	1E22-F0004-IS	12" GATE VALVE, INTERNAL SURFACE (GROUPING NUMBER XIX)	VT-3	SR**	701-108
B12.50	1E22-F0005-IS	12" CHECK VALVE, INTERNAL SURFACE (GROUPING NUMBER XX)	VT-3	SR**	701-111
B12.50	1E22-F0036-IS	12" GATE VALVE, INTERNAL SURFACE (GROUPING NUMBER XVIII)	VT-3	SR**	701-111
B12.50	1E51-F0013-IS	6" GATE VALVE, INTERNAL SURFACE (GROUPING NUMBER XXI)	VT-3	SR**	631-105
B12.50	1E51-F0063-IS	10" GATE VALVE, INTERNAL SURFACE (GROUPING NUMBER XXII)	VT-3	SR**	632-101
B12.50	1E51-F0064-IS	10" GATE VALVE, INTERNAL SURFACE (GROUPING NUMBER XXII)	VT-3	SR**	632-102
B12.50	1E51-F0065-IS	6" CHECK VALVE, INTERNAL SURFACE (GROUPING NUMBER XXIII)	VT-3	SR**	631-106
B12.50	1E51-F0066-IS	6" CHECK VALVE, INTERNAL SURFACE (GROUPING NUMBER XXIII)	VT-3	SR**	631-108
B12.50	1G33-F0001-IS	6" GATE VALVE, INTERNAL SURFACE (GROUPING NUMBER VIII)	VT-3	SR**	671-103
B12.50	1G33-F0004-IS	6" GATE VALVE, INTERNAL SURFACE (GROUPING NUMBER VIII)	VT-3	SR**	671-104
B12.50	1G33-F0100-IS	4" GATE VALVE, INTERNAL SURFACE (GROUPING NUMBER IX)	VT-3	SR**	671-107
B12.50	1G33-F0106-IS	4" GATE VALVE, INTERNAL SURFACE (GROUPING NUMBER IX)	VT-3	SR**	671-105
B12.50	1N27-F0559A-IS	20" CHECK VALVE, INTERNAL SURFACE (GROUPING NUMBER III)	VT-3	SR**	082-102
B12.50	1N27-F0559B-IS	20" CHECK VALVE, INTERNAL SURFACE (GROUPING NUMBER III)	VT-3	SR**	082-105
B12.50	1N27-F0560A-IS	20" GATE VALVE, INTERNAL SURFACE (GROUPING NUMBER IV)	VT-3	SR**	082-102
B12.50	1N27-F0560B-IS	20" GATE VALVE, INTERNAL SURFACE (GROUPING NUMBER IV)	VT-3	SR**	082-105

* To be performed in accordance with the SRV replacement schedule, typically every other refueling outage. A complete examination is only required once per 10-Year Interval.

** One valve among each grouping is to be examined over the course of the interval if maintenance, repair, or modification provides access.

		EXAMINATION CATEGORY: B-N-1			
B13.10	1B13-INTERIOR	REACTOR VESSEL INTERIOR REGION	VT-3	1*	006-101
		EXAMINATION CATEGORY: B-N-2			
B13.20	1B13-JPRBA-P1/P2	JET PUMP RISER BRACE ARM/VESSEL ATTACHMENT WELDS	VT-1	1	006-125
B13.20	1B13-JPRBA-P3/P4	JET PUMP RISER BRACE ARM/VESSEL ATTACHMENT WELDS	VT-1	1	006-125
B13.20	1B13-JPRBA-P5/P6	JET PUMP RISER BRACE ARM/VESSEL ATTACHMENT WELDS	VT-1	1	006-125
B13.20	1B13-JPRBA-P7/P8	JET PUMP RISER BRACE ARM/VESSEL ATTACHMENT WELDS	VT-1	1	006-125
B13.20	1B13-JPRBA-P9/P10	JET PUMP RISER BRACE ARM/VESSEL ATTACHMENT WELDS	VT-1	1	006-125

* Currently scheduled for period 1 only, due to pending relief request, IR-56.

ITEM NO.	MARK NO.	COMPONENT DESCRIPTION	EXAM METHOD	PERIOD SCHED.	ISI ISO SS-305-
		EXAMINATION CATEGORY: B-N-2			
B13.20	1B13-JPRBA-P11/P12	JET PUMP RISER BRACE ARM/VESSEL ATTACHMENT WELDS	VT-1	3	006-125
B13.20	1B13-JPRBA-P13/P14	JET PUMP RISER BRACE ARM/VESSEL ATTACHMENT WELDS	VT-1	3	006-125
B13.20	1B13-JPRBA-P15/P16	JET PUMP RISER BRACE ARM/VESSEL ATTACHMENT WELDS	VT-1	3	006-125
B13.20	1B13-JPRBA-P17/P17	JET PUMP RISER BRACE ARM/VESSEL ATTACHMENT WELDS	VT-1	3	006-125
B13.20	1B13-JPRBA-P19/P20	JET PUMP RISER BRACE ARM/VESSEL ATTACHMENT WELDS	VT-1	3	006-125
B13.20	1B13-SSH-WA-1	RPV SAMPLE HOLDER, WELDED ATTACHMENT	VT-1	3	006-127
B13.20	1B13-SSH-WA-2	RPV SAMPLE HOLDER, WELDED ATTACHMENT	VT-1	3	006-127
B13.20	1B13-SSH-WA-3	RPV SAMPLE HOLDER, WELDED ATTACHMENT	VT-1	3	006-127
B13.30	1B13-CSS-WA	RPV CORE SPRAY PIPING BRACKET WELDED ATTACHMENTS	VT-3	3	006-114
B13.30	1B13-FWSB-WA	RPV FEEDWATER SPARGER BRACKET WELDED ATTACHMENTS	EVT1	1	006-118
B13.30	1B13-GRSB-WA	RPV GUIDE ROD SUPPORT BRACKET WELDED ATTACHMENTS	VT-3	3	006-101
B13.30	1B13-SDHDB-WA	RPV STEAM DRYER HOLD DOWN BRACKET WELDED ATTACHMENTS	VT-3	1	006-130
B13.30	1B13-SDSB-WA	RPV STEAM DRYER SUPPORT BRACKET WELDED ATTACHMENTS	EVT1	1	006-130
B13.40	1B13-CSPT-SI	RPV CORE SUPPORT STRUCTURE, SHROUD-INSIDE	VT-3	NS IR56	006-122
B13.40	1B13-CSPT-SL-01	RPV CORE SUPPORT STRUCTURE, SHROUD LEG	VT-3	NS IR56	006-121
B13.40	1B13-CSPT-SL-02	RPV CORE SUPPORT STRUCTURE, SHROUD LEG	VT-3	NS IR56	006-121
B13.40	1B13-CSPT-SL-03	RPV CORE SUPPORT STRUCTURE, SHROUD LEG	VT-3	NS IR56	006-121
B13.40	1B13-CSPT-SL-04	RPV CORE SUPPORT STRUCTURE, SHROUD LEG	VT-3	NS IR56	006-121
B13.40	1B13-CSPT-SL-05	RPV CORE SUPPORT STRUCTURE, SHROUD LEG	VT-3	NS IR56	006-121
B13.40	1B13-CSPT-SL-06	RPV CORE SUPPORT STRUCTURE, SHROUD LEG	VT-3	NS IR56	006-121
B13.40	1B13-CSPT-SL-07	RPV CORE SUPPORT STRUCTURE, SHROUD LEG	VT-3	NS IR56	006-121
B13.40	1B13-CSPT-SL-08	RPV CORE SUPPORT STRUCTURE, SHROUD LEG	VT-3	NS IR56	006-121
B13.40	1B13-CSPT-SL-09	RPV CORE SUPPORT STRUCTURE, SHROUD LEG	VT-3	NS IR56	006-121
B13.40	1B13-CSPT-SL-010	RPV CORE SUPPORT STRUCTURE, SHROUD LEG	VT-3	NS IR56	006-121
B13.40	1B13-CSPT-SL-011	RPV CORE SUPPORT STRUCTURE, SHROUD LEG	VT-3	NS IR56	006-121
B13.40	1B13-CSPT-SL-012	RPV CORE SUPPORT STRUCTURE, SHROUD LEG	VT-3	NS IR56	006-121
B13.40	1B13-CSPT-SO	RPV CORE SUPPORT STRUCTURE, SHROUD OUTSIDE	VT-3	NS IR56	006-122
B13.40	1B13-CSPT-SSP	RPV CORE SUPPORT STRUCTURE, SHROUD SUPPORT PLATE	VT-3	NS IR56	006-121
B13.40	1B13-CSPT-TGA	RPV CORE SUPPORT STRUCTURE, TOP GUIDE ASSEMBLY	VT-3	NS IR56	006-123
B13.40	1B13-CSPT-TGG	RPV CORE SUPPORT STRUCTURE, TOP GUIDE GRID	VT-3	NS IR56	006-123
B13.40	1B13-CSPTO-X/Y	RPV CORE SUPPORT STRUCTURE, ORIFICED FUEL SUPPORT AND SURROUNDING CORE PLATE	VT-3	NS IR56	006-120
B13.50		NOT APPLICABLE AT PNPP			
B13.60		NOT APPLICABLE AT PNPP			
		EXAMINATION CATEGORY: B-N-3			
B13.70		NOT APPLICABLE AT PNPP			

ITEM NO.	MARK NO.	COMPONENT DESCRIPTION	EXAM METHOD	PERIOD SCHED.	ISI ISO SS-305-
		EXAMINATION CATEGORY: B-O			
B14.10	1B13-02/23-FW	CRD HOUSING TO FLANGE WELD	PT	NS	006-110
B14.10	1B13-02/23-HW	CRD HOUSING TO HOUSING WELD	PT	NS	006-110
B14.10	1B13-02/27-FW	CRD HOUSING TO FLANGE WELD	PT	NS	006-110
B14.10	1B13-02/27-HW	CRD HOUSING TO HOUSING WELD	PT	NS	006-110
B14.10	1B13-02/31-FW	CRD HOUSING TO FLANGE WELD	PT	NS	006-110
B14.10	1B13-02/31-HW	CRD HOUSING TO HOUSING WELD	PT	NS	006-110
B14.10	1B13-02/35-FW	CRD HOUSING TO FLANGE WELD	PT	1*	006-110
B14.10	1B13-02/35-HW	CRD HOUSING TO HOUSING WELD	PT	1	006-110
B14.10	1B13-02/39-FW	CRD HOUSING TO FLANGE WELD	PT	NS	006-110
B14.10	1B13-02/39-HW	CRD HOUSING TO HOUSING WELD	PT	NS	006-110
B14.10	1B13-06/15-FW	CRD HOUSING TO FLANGE WELD	PT	NS	006-110
B14.10	1B13-06/15-HW	CRD HOUSING TO HOUSING WELD	PT	NS	006-110
B14.10	1B13-06/47-FW	CRD HOUSING TO FLANGE WELD	PT	NS	006-110
B14.10	1B13-06/47-HW	CRD HOUSING TO HOUSING WELD	PT	NS	006-110
B14.10	1B13-10/11-FW	CRD HOUSING TO FLANGE WELD	PT	NS	006-110
B14.10	1B13-10/11-HW	CRD HOUSING TO HOUSING WELD	PT	NS	006-110
B14.10	1B13-10/51-FW	CRD HOUSING TO FLANGE WELD	PT	NS	006-110
B14.10	1B13-10/51-HW	CRD HOUSING TO HOUSING WELD	PT	NS	006-110
B14.10	1B13-14/07-FW	CRD HOUSING TO FLANGE WELD	PT	NS	006-110
B14.10	1B13-14/07-HW	CRD HOUSING TO HOUSING WELD	PT	NS	006-110
B14.10	1B13-14/55-FW	CRD HOUSING TO FLANGE WELD	PT	NS	006-110
B14.10	1B13-14/55-HW	CRD HOUSING TO HOUSING WELD	PT	NS	006-110
B14.10	1B13-22/03-FW	CRD HOUSING TO FLANGE WELD	PT	3*	006-110
B14.10	1B13-22/03-HW	CRD HOUSING TO HOUSING WELD	PT	NS	006-110
B14.10	1B13-22/59-FW	CRD HOUSING TO FLANGE WELD	PT	NS	006-110
B14.10	1B13-22/59-HW	CRD HOUSING TO HOUSING WELD	PT	3	006-110
B14.10	1B13-26/03-FW	CRD HOUSING TO FLANGE WELD	PT	NS	006-110
B14.10	1B13-26/03-HW	CRD HOUSING TO HOUSING WELD	PT	NS	006-110
B14.10	1B13-26/59-FW	CRD HOUSING TO FLANGE WELD	PT	NS	006-110
B14.10	1B13-26/59-HW	CRD HOUSING TO HOUSING WELD	PT	2	006-110
B14.10	1B13-30/03-FW	CRD HOUSING TO FLANGE WELD	PT	2*	006-110
B14.10	1B13-30/03-HW	CRD HOUSING TO HOUSING WELD	PT	NS	006-110
B14.10	1B13-30/59-FW	CRD HOUSING TO FLANGE WELD	PT	NS	006-110
B14.10	1B13-30/59-HW	CRD HOUSING TO HOUSING WELD	PT	NS	006-110
B14.10	1B13-34/03-FW	CRD HOUSING TO FLANGE WELD	PT	NS	006-110
B14.10	1B13-34/03-HW	CRD HOUSING TO HOUSING WELD	PT	NS	006-110
B14.10	1B13-34/59-FW	CRD HOUSING TO FLANGE WELD	PT	NS	006-110
B14.10	1B13-34/59-HW	CRD HOUSING TO HOUSING WELD	PT	NS	006-110
B14.10	1B13-38/03-FW	CRD HOUSING TO FLANGE WELD	PT	NS	006-110

ITEM NO.	MARK NO.	COMPONENT DESCRIPTION	EXAM METHOD	PERIOD SCHED.	ISI ISO SS-305-
		EXAMINATION CATEGORY: B-O			
B14.10	1B13-38/03-HW	CRD HOUSING TO HOUSING WELD	PT	NS	006-110
B14.10	1B13-38/59-FW	CRD HOUSING TO FLANGE WELD	PT	NS	006-110
B14.10	1B13-38/59-HW	CRD HOUSING TO HOUSING WELD	PT	3	006-110
B14.10	1B13-46/07-FW	CRD HOUSING TO FLANGE WELD	PT	NS	006-110
B14.10	1B13-46/07-HW	CRD HOUSING TO HOUSING WELD	PT	NS	006-110
B14.10	1B13-46/55-FW	CRD HOUSING TO FLANGE WELD	PT	NS	006-110
B14.10	1B13-46/55-HW	CRD HOUSING TO HOUSING WELD	PT	NS	006-110
B14.10	1B13-50/11-FW	CRD HOUSING TO FLANGE WELD	PT	NS	006-110
B14.10	1B13-50/11-HW	CRD HOUSING TO HOUSING WELD	PT	NS	006-110
B14.10	1B13-50/51-FW	CRD HOUSING TO FLANGE WELD	PT	NS	006-110
B14.10	1B13-50/51-HW	CRD HOUSING TO HOUSING WELD	PT	NS	006-110
B14.10	1B13-54/15-FW	CRD HOUSING TO FLANGE WELD	PT	3*	006-110
B14.10	1B13-54/15-HW	CRD HOUSING TO HOUSING WELD	PT	NS	006-110
B14.10	1B13-54/47-FW	CRD HOUSING TO FLANGE WELD	PT	NS	006-110
B14.10	1B13-54/47-HW	CRD HOUSING TO HOUSING WELD	PT	NS	006-110
B14.10	1B13-58/23-FW	CRD HOUSING TO FLANGE WELD	PT	NS	006-110
B14.10	1B13-58/23-HW	CRD HOUSING TO HOUSING WELD	PT	NS	006-110
B14.10	1B13-58/27-FW	CRD HOUSING TO FLANGE WELD	PT	NS	006-110
B14.10	1B13-58/27-HW	CRD HOUSING TO HOUSING WELD	PT	NS	006-110
B14.10	1B13-58/31-FW	CRD HOUSING TO FLANGE WELD	PT	NS	006-110
B14.10	1B13-58/31-HW	CRD HOUSING TO HOUSING WELD	PT	NS	006-110
B14.10	1B13-58/35-FW	CRD HOUSING TO FLANGE WELD	PT	NS	006-110
B14.10	1B13-58/35-HW	CRD HOUSING TO HOUSING WELD	PT	NS	006-110
B14.10	1B13-58/39-FW	CRD HOUSING TO FLANGE WELD	PT	NS	006-110
B14.10	1B13-58/39-HW	CRD HOUSING TO HOUSING WELD	PT	NS	006-110

* Code requirement for Category B-O is to examine 10% of the periphery welds. There are 32 periphery CRD housings, so 3.2 housing and 3.2 housing to flange welds are required. Insert and withdraw lines limit inspection coverage for the flange welds to 85%. Relief Request IR-009, Rev. 2 was submitted for the limited coverage. By scheduling 4 CRD housing to flange welds, the linear length of weld examined exceeds that which would be examined if essentially 100% of 3.2 CRD housing to flange welds were examined.

ITEM NO.	MARK NO.	COMPONENT DESCRIPTION	EXAM METHOD	PERIOD SCHED.	ISI ISO SS-305-
		EXAMINATION CATEGORY: B-P			
B15.10	PR COMPONENTS	REACTOR VESSEL-SYSTEM LEAKAGE TEST (ISI-1B21-T1300-1)	VT-2	1,2,3*	

* To be Performed Every Refueling Outage

		EXAMINATION CATEGORY: B-Q			
B16.10	STEAM GEN	NOT APPLICABLE AT PNPP			
B16.20	STEAM GEN	NOT APPLICABLE AT PNPP			

3.0 IWC (CLASS 2) EXAMINATIONS

Class 2 examination categories are identifiable by a 'C' as the first assigned letter and are as follows:

Examination Category	Examination Item No.[1] - Area (Examination Method)
C-A	Pressure Retaining Welds in Pressure Vessels:
	C1.10 - Shell Circumferential Welds (Volumetric)
	C1.20 - Head Circumferential Welds (Volumetric)
C-B	Pressure Retaining Nozzle Welds in Vessel:
	C2.21 - Nozzle-to-Shell Welds for nozzles without reinforcing plate in vessels > ½ in. T_{nom} (Surface & Volumetric)
	C2.22 - Nozzle Inside Radius Section for nozzles without reinforcing plate in vessels > ½ in. T_{nom} (Volumetric)
C-C	Integral Attachments for Vessels, Piping, Pumps and Valves:
	C3.10[2] - Pressure Vessel Integrally Welded Attachments (Surface)
	C3.20 - Piping Integrally Welded Attachments (Surface)
	C3.30 - Pump Integrally Welded Attachments (Surface)
C-D[3]	Pressure Retaining Bolting Greater Than 2 inches in Diameter:
	C4.30 - Pump Bolts and Studs (Volumetric)
C-F-1	Pressure Retaining Welds in Austenitic Stainless Steel or High Alloy Piping: (NONE AT PNNP)
C-F-2[4]	Pressure Retaining Welds in Carbon and Low Alloy Steel Piping:
	C5.51 - Circumferential Welds ≥ 3/8 in. T_{nom} for piping NPS > 4 inches (Surface & Volumetric)
	C5.81 - Circumferential Welds in piping branch connections of branch piping NPS > 4 inches (Surface)
C-G	Pressure Retaining Welds in Pumps and Valves:
	C6.10 - Pump Casing Welds (Surface)
	C6.20 - Valve Body Welds (Surface)
C-H	All Pressure Retaining Components:
	C7.10 - Pressure Retaining Components - System Leakage Tests (VT-2)

NOTES:
1. Only those Code item numbers that are applicable at PNPP.
2. Includes the use of Code Case N-700.
3. Includes the use of Code Case N-652-1.
4. Includes the use of Code Case N-663.

3.1 Exemptions

Per the provisions of Section XI, components may be exempted from specific examination requirements providing that they are within the exemption criteria. Listed below are the exemptions applicable to the ISEP.

The following components within RHR, ECC, and CHR systems are exempted from volumetric and surface examination requirements [IWC-1221(a)&(f)].

1. Vessels, piping, pumps, valves, and other components 4 inch NPS and smaller.

2. Piping and other components of any size beyond the last shutoff valve in open ended portions of systems that do not contain water during normal plant operations.

The following components in systems other than RHR, ECC, and CHR are exempted from volumetric and surface examination requirements [IWC-1222(a) through (d)].

1. Vessels, piping, pumps, valves, and other components NPS 4 and smaller.

2. Component connections NPS 4 and smaller (including nozzles, socket fittings, and other connections) in vessels, piping, pumps, valves, and other components of any size.

3. Vessels, piping, pumps, valves, other components, and component connections of any size in systems or portions of systems that operate (when the system function is required) at a pressure equal to or less than 275 psig and at a temperature equal to or less than 200°.

4. Piping and other components of any size beyond the last shutoff valve in open ended portions of systems that do not contain water during normal plant operating conditions.

Piping support members and piping support components that are encased in concrete shall be exempted from the requirements of IWC-2500 [IWC-1230].

3.2 Examination Selection Process

For Examination Categories C-A, C-B, C-C, C-D, C-F-2 and C-G not all of the non-exempt components are required to be examined. For these Categories, ASME Section XI (or the applicable Code Case) delineates the following criteria for selecting the non-exempt components (or areas) to be examined.

3.2.1 C-A, Pressure Retaining Welds in Pressure Vessels, and C-B, Pressure Retaining Nozzle Welds in Vessels.

The criteria for selecting the welds to be examined are:

1. For shell welds, only those at gross structural discontinuities such as shell (or head)-to-flange weld, and head-to-shell welds;

2. For all shell and nozzle welds, in the case of multiple vessels of similar design, size, and service (such as the RHR heat exchangers), the required exams may be limited to one vessel.

3.2.2 C-C, Integral Attachments for Vessels, Piping, Pumps, and Valves

The criteria for selecting the welds to be examined are:

1. The attachment is on the outside of the pressure retaining component, provides support as defined in NF-1110, and the attachment weld joins the attachment either directly to the surface of the component or to an integrally cast or forged attachment to the component.

2. In case of multiple vessels of similar design and service, only one integral attachment of only one of the multiple vessels shall be selected for examination however, at least 10% of the integral attachments shall be examined.

3. For piping pumps and valves, a sample of 10% the welded attachments associated with the component supports selected for examination under IWF-2510,(i.e., those of components that are required to be examined under IWC-2500 by volumetric, surface, or visual VT-1 & VT-3 examinations, and those of piping not exempted by IWC-1220), shall be examined.

4. Examination is required whenever component support member deformation (e.g., broken, bent, or pulled out parts) is identified during operation, refueling, maintenance, examination, inservice inspection, or testing.

3.2.3 C-D, Pressure Retaining Bolting Greater than 2 in. In Diameter

The criteria for selecting the bolting are:

1. The exam of bolting for vessels, pumps, and valves may be conducted on one vessel, one pump, one valve among a group of vessels, pumps, and valves in each system required to be examined and which are similar in design, size, function, and service (for PNPP only the LPCS pump has bolting > 2 in. in diameter);

2. The exam of flange bolting in piping systems required to be examined may be limited to the flange connections in pipe runs selected for examination under Examination Category C-F-1 and C-F-2 (for PNPP there is none greater than 2 in. in diameter).

3.2.4 C-F-2, Pressure Retaining Welds in Carbon or Low Alloy Steel Piping

The criteria for selecting the welds to be examined are:

1. The welds selected for examination shall include 7.5% of all carbon or low alloy welds, but not less than 28 welds, of all carbon and low alloy steel welds not exempted by IWC-1220. (Some welds not exempted by IWC-1220, such as welds greater than 4 inch NPS, but less than .375 inch NWT, are not required to be nondestructively examined per C-F-2. These welds, however, shall be included in the total weld count to which the 7.5% sampling rate is applied). The intersecting portion of the longitudinal welds are also required to be examined;

2. The examinations shall be distributed among the Class 2 systems prorated, to the degree practicable, on the number of non-exempt welds in each system;

3. Within each system, the examinations shall be distributed among terminal ends and structural discontinuities (and line sizes) prorated, to the degree practicable, on the number of nonexempt terminal ends and structural discontinuities in that system.

4. With the incorporation of Code Case N-663, and since PNPP used insulation meeting RG 1.36 requirements (chloride free) and has not identified any plant-specific outside surface attack mechanisms within the scope of the Class 2 large bore piping systems, no C5.81 items (branch connections), for which only a surface examination is specified in Table IWC-2500-1, are selected for examination.

The selection criteria is applied, to the extent practical, individually to each of the Category C-F-2 item numbers (i.e., percentages requirements will generally be met for each item number).

3.2.5 C-G, Pressure Retaining Welds in Pumps and Valves

The criteria for selecting the welds to be examined are:

1. Limited to welds in components in piping runs examined under Examination Category C-F-2;

2. In case of multiple pumps and valves of similar design, size, function, and service in a system, the examination of only one pump and one valve among each group of multiple pumps and valves is required (see Tables 3.3.4-1 and 3.3.4-2 below).

TABLE 3.3.4-1 CLASS 2 PUMPS

SYSTEM	PUMP ID	MANUFACTURER
Residual Heat Removal	E12-C002A*	Bryon Jackson
Residual Heat Removal	E12-C002B*	Bryon Jackson
Residual Heat Removal	E12-C002C	Bryon Jackson
Low Pressure Core Spray	E21-C001	Bryon Jackson
High Pressure Core Spray	E22-C001	Bryon Jackson
Reactor Core Isolation Cooling	E51-C001	Bingham Williamette

* Similar design, size, function, and service

Table 3.3.4-2 Class-2 Valve Grouping

GROUPING NUMBER	MANUFACTURING METHOD	VALVE DESIGN	PIPING SYSTEM	VALVE SIZE (NPS)	WELDED BODY YES	WELDED BODY NO	VALVE ID NUMBER
I	FORGED	CHECK	HIGH PRESSURE CORE SPRAY	6″	YES		E22-F003
II	FORGED	GATE	HIGH PRESSURE CORE SPRAY	6″	YES		E22-F026
III	FORGED	GATE	REACTOR CORE ISOLATION COOLING	6″	YES		E51-F502

3.3 Additional Examinations

Examinations performed in accordance with Table IWC-2500-1, except for Examination Category C-H, that reveal flaws or relevant indications exceeding acceptance standards of Table IWC-3410-1 shall be extended to include additional examinations during the current outage. The additional examinations shall include an additional number of welds, areas, or parts included in the inspection item equal to 20% of the number welds, areas, or parts included in the inspection item that are scheduled to be performed during the interval. The additional examinations shall be selected from welds, areas, or parts of similar material and service. This additional selection may require inclusion of piping systems other than the one containing the flaws or relevant conditions. As an alternative to the above requirements, an engineering evaluation meeting the requirements within Code Case N-586-1 may be used to determine that additional examination scope.

If these additional examinations detect further indications exceeding the acceptance standards of IWC-3410-1, the examinations shall be further extended to include additional examinations during the current outage. These additional examinations shall include the remaining number of welds, areas, or parts of similar material and service subject to the same type of flaws or relevant conditions

For the inspection period following the period in which the examinations of IWC-2430(a) or (b) were completed, the examinations shall be performed as originally scheduled in accordance with IWC-2400

If welded attachments are examined as a result of identified component support deformation and the results of these examinations exceed the acceptance standards of Table IWC-3410-1 additional examinations shall be performed, if necessary, based on the Condition Report evaluation.

3.4 Successive Examinations

The sequence of component examinations which was established in the first inspection interval shall be repeated in the successive inspection intervals, to the extent practical. As allowed by Code Case N-624, the sequence of examinations may be modified in a manner that optimizes scaffolding, radiological, insulation removal, or other considerations provided the Program B percentage requirements are met.

If a component is accepted for continued service in accordance with IWC-3122.3 if IWC-3132.3, the areas containing the flaws or relevant conditions shall be re-examined during the next inspection periods listed in the schedule of the inspection program of IWC-2400. Alternatively, acoustic emission may be used to monitor growth of existing flaws in accordance with IWA-2420(b).

If reexaminations required by IWC-2420(b) reveal that the flaws or relevant conditions remain essentially unchanged for three successive inspection periods, the component examination schedule may revert to the original schedule of successive inspections.

If welded attachments are examined as a result of identified component support deformation, and the results of these examinations exceed the acceptance standards of Table IWC-3410-1, successive examinations shall be performed, if determined necessary, based on the Condition Report evaluation.

3.5 Relief Requests

When compliance to Code examination requirements is not achievable, relief from examinations is requested. Inservice Relief Requests (IR), which are required to be filed with the NRC for components subject to the examination requirements of ASME Section XI, Article IWC are:

IR No./Rev	Submittal Letter	NRC Safety Eval
IR-012, R-3	L-10-246	SE to follow review/approval
IR-013, R-2	L-10-246	SE to follow review/approval

NOTE: Relief Request IR-15 was listed and exhibited herein, but none of the components listed in IR-15 remain scheduled for examination and it is no longer needed. Relief Requests IR-019 and IR-026 were no longer required due to a code change for Figure IWC-2500-1.

The relief requests that are submitted to the NRC for approval are processed through Fleet Licensing and become docketed correspondence. Additionally, copies are captured in the ISI Program Notebook. The copies of the requests exhibited on the following pages are for information only.

Perry Nuclear Power Plant Unit 1
RELIEF REQUEST #IR-012, Rev. 3

1. ASME Code Component(s) Affected

ASME Code Class 2 integrally welded support attachment from the Reactor Core Isolation Cooling (RCIC) System (E51); Category C-C; Item C3.30 (Pump Welded Attachment).

ITEM NO.	COMPONENT I.D.	SYS./DWG. NO.	DESCRIPTION
C3.20	1-E51-C0001-A-WA	305-631-109	WELDED PUMP CASING SUPPORT LUG

2. Applicable Code Edition and Addenda

The applicable ASME B&PV Section XI code of record for Perry NPP for the 3rd 10-Year Inservice Inspection Interval is the 2001 Edition through the 2003 Addenda as modified by 10CFR50.55a.

3. Applicable Code Requirement

Table IWC-2500-1, Category C-C, Item No. C3.30 requires 100% of required areas of the welded attachment surface as defined by Figure IWC-2500-5. Note 5 of Table IWC-2500-1 for Category C-C welds allows for a sample of 10% of the welded attachments.

4. Reason for Request

Pursuant to 10 CFR 50.55a(a)(3)(ii), an alternative to examining 100% of the required area as defined by Figure IWC-2500-5 is being requested for the area of the pump support integral attachment weld that is only partially accessible due to pedestal interference (see Figure IR-012-1). Coverage is limited to approximately 83%. Disassembly of the pump pedestal to provide for additional coverage does not significantly improve the quality of the examination without an increase hardship from the maintenance or redesign of the pedestal, based on known inservice degradation mechanisms. The relief is requested for Perry's third 10-year inspection interval.

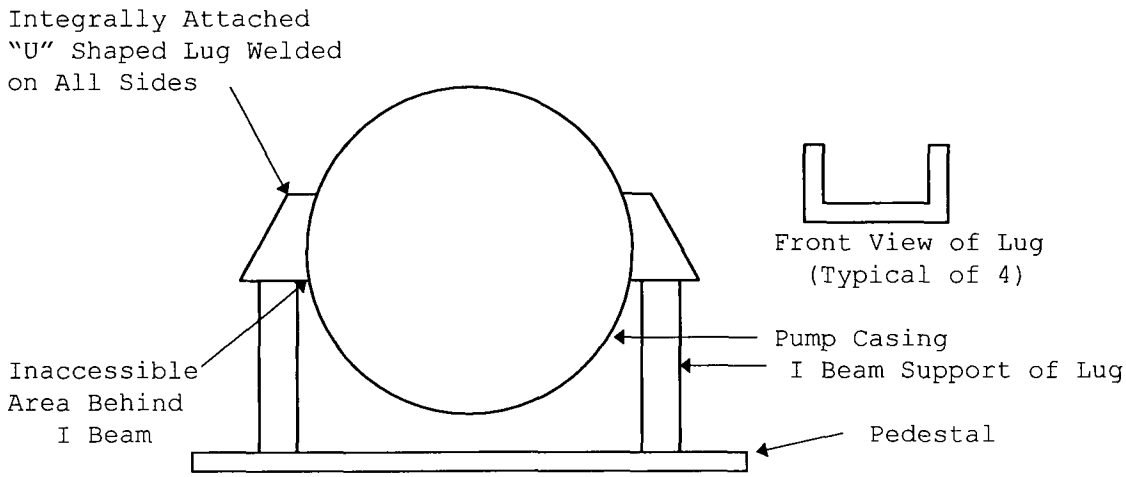

Figure IR-012-1

5. Proposed Alternative and Basis for Use

Partial examination, which meets all the requirements of ASME Section XI, 2001 Edition through the 2003 Addenda except coverage, will be performed.

In addition to partial examination of the subject weld, complete examinations meeting the requirements of the ASME Code Section XI are performed on welds of similar configurations that utilize essentially similar weld techniques, procedures and materials. The examined welds are subject to the same operating and environmental conditions as the partially examined weld.

Since the construction, operating conditions and environmental conditions of the non-examined portions of the weld are identical to the examined portions, it is reasonable to apply satisfactory results to the non-examined portions.

Design, procurement and operational provisions against nil ductile failure of the subject welds remain as described in the Perry USAR.

Full access to the subject pump casing integral attachment welds could only be provided by redesign of the pump's pedestal mounting.

In summary, because of the capability to examine at least 83% of the weld surfaces on a continuing basis, protection against brittle failure, and the previous approval of similar relief it is concluded that the specified requirements does not provides an acceptable level of quality or safety.

6. Duration of Proposed Alternative

This request is being requested for the 3rd 10-year ISI Interval, which will expire May 17, 2019.

7. Precedents

Revision 2 of this relief request, which requested similar relief for the subject weld for Perry's second 10-year inspection interval, was approved by the NRC (reference TAC No. MA3437, dated 11/22/99).

Perry Nuclear Power Plant Unit 1
RELIEF REQUEST #IR-013, Rev. 2

1. ASME Code Component(s) Affected

ASME Code Class 2 pump casing welds (28) in the Residual Heat Removal (E12), High Pressure Core Spray (E22), and Low Pressure Core Spray (E21) Systems; Category C-G, Item C6.10 (Pump Casing Welds).

2. Applicable Code Edition and Addenda

The applicable ASME B&PV Section XI code of record for Perry NPP for the 3rd 10-Year Inservice Inspection Interval is the 2001 Edition through the 2003 Addenda as modified by 10CFR50.55a.

3. Applicable Code Requirement

Table IWC-2500-1, Category C-G, Item No. C6.10 requires surface examination of the areas defined by Figure IWC-2500-8. Note 1 of Table IWC-2500-1, Category C-G, Item No. C6.10 states that "In the case of multiple pumps of similar design, size, function and service in a system, required weld examinations may be limited to all the welds in one pump in the same group."

4. Reason for Request

Pursuant to 10 CFR 50.55a(a)(3)(ii), relief is requested from performing routinely scheduled examinations of those pump casing welds that are inaccessible because they are located within those portions of vertical line shaft pump casings that are installed below the floor elevations (i.e., bolted into a pit). The relief is requested for Perry's third 10-year inspection interval.

5. Proposed Alternative and Basis for Use

If the subject welds become accessible through the disassembly of the pumps for maintenance, repair or modification, examinations which meet all the requirements of ASME Section XI, 2001 Edition through the 2003 Addenda will be performed. PNPP will only schedule the weld examinations which are accessible at this time.

The subject welds are below the floor elevation. See Figure IR-013-01. Only disassembly of the pump and removal of all the pump internals would provide examination access to these welds. Disassembly would involve removal of the 7,800-lb. pump motor, and the 22-ft long, 16,000-lb. pump head and vertical line shaft assembly.

The pump casing welds above the floor elevation can be fully examined. Since the construction and operating conditions of these accessible pump casing welds are identical to those of the inaccessible welds, it is reasonable to apply satisfactory results from examined welds to the non-examined welds.

In summary, because of the acceptable initial condition, the capability to examine the similar accessible welds on a continuing basis, and the previous approval of similar relief it is concluded that the specified requirements would result in hardship or unusual difficulty without a compensating increase in the level of quality or safety.

6. Duration of Proposed Alternative

This alternative is being requested for the 3rd 10-year ISI Interval, which will expire May 17, 2019.

7. Precedents

The NRC (reference TAC No. MA3437, dated 11/22/99) approved revision 1 of this relief request, which requested similar relief for the subject welds for Perry's second 10-year inspection interval.

Perry Nuclear Power Plant Unit 1
RELIEF REQUEST #IR-013, Rev. 2

WELD NO.	ISI ISO SS-305-	DESCRIPTION
1-E22-C001-001	701-114	Pump Head to Barrel Shell Weld
1-E22-C001-002	701-114	Pump Shell to Shell Weld
1-E22-C001-003	701-114	Pump Shell to Shell Weld
1-E22-C001-004	701-114	Pump Shell to Flange Weld
1-E22-C001-013	701-114	Pump Barrel Long seam
1-E22-C001-014	701-114	Pump Barrel Long seam
1-E22-C001-015	701-114	Pump Barrel Long seam
1-E21-C001-001	705-113	Pump Head to Barrel Shell Weld
1-E21-C001-002	705-113	Pump Shell to Shell Weld
1-E21-C001-003	705-113	Pump Shell to Flange Weld
1-E21-C001-012	705-113	Pump Shell to Shell Weld
1-E21-C001-013	705-113	Pump Barrel Long seam
1-E21-C001-014	705-113	Pump Barrel Long seam
1-E21-C001-015	705-113	Pump Barrel Long seam
1-E12-C002A-001	641-120	Pump Head to Barrel Shell Weld
1-E12-C002A-002	641-120	Pump Shell to Shell Weld
1-E12-C002A-003	641-120	Pump Shell to Flange Weld
1-E12-C002A-012	641-120	Pump Shell to Shell Weld
1-E12-C002A-013	641-120	Pump Barrel Long seam
1-E12-C002A-014	641-120	Pump Barrel Long seam
1-E12-C002A-015	641-120	Pump Barrel Long seam

E12 = Residual Heat Removal
E22 = High Pressure Core Spray
E21 = Low Pressure Core Spray

Perry Nuclear Power Plant Unit 1
RELIEF REQUEST #IR-013, Rev. 2

WELD NO.	ISI ISO SS-305-	DESCRIPTION
1-E12-C002C-001	643-122	Pump Head to Barrel Shell Weld
1-E12-C002C-002	643-122	Pump Shell to Shell Weld
1-E12-C002C-003	643-122	Pump Shell to Flange Weld
1-E12-C002C-012	643-122	Pump Shell to Shell Weld
1-E12-C002C-013	643-122	Pump Barrel Long seam
1-E12-C002C-014	643-122	Pump Barrel Long seam
1-E12-C002C-015	643-122	Pump Barrel Long seam

E12 = Residual Heat Removal

Figure IR-013-01

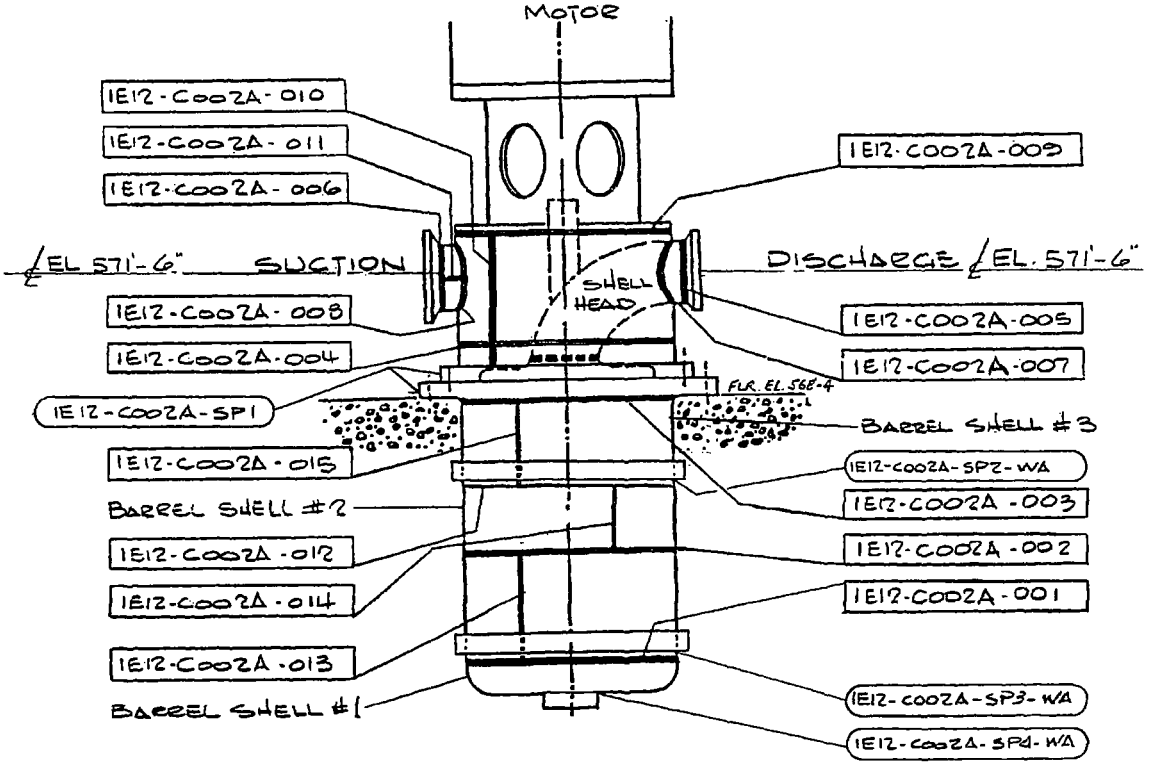

Note: This drawing shows an example (Residual Heat Removal Pump - 1E12) of the inaccessible welds, all three pumps are a similar configuration.

3.6 Inservice Examination Table

This section contains the listing of all Class 2 components subject to the examination requirements of ASME Section XI, Article IWC. The components scheduled for examinations are presented to management for approval at least 60 days prior to commencing a scheduled refueling outage.

The information presented in the tables are defined below:

1. EXAMINATION CATEGORY - The basis for organizing components subject to examination.

2. ITEM NO. - A division within an examination category which separates the specific examination requirements.

3. MARK No. - A unique identification number assigned to each weld or component.

4. COMPONENT DESCRIPTION - A brief description used to identify the weld or component.

5. EXAM METHOD - This abbreviation identifies the unique non-destructive examination method(s) required for the weld or component. The abbreviations used in this listing are as follows:

MT	-	Magnetic Particle Testing (see Note)
PT	-	Dye Penetrant Testing (see Note)
UT	-	Ultrasonic Testing
VT-1	-	Visual Examination for Surface Conditions
VT-2	-	Visual Examination for Leakage
VT-3	-	Visual Examination for General Conditions

NOTE: For carbon steel welds, MT & PT are interchangeable.

6. PERIOD SCHED. - This column identifies the inspection period which the weld or component is scheduled to receive examination. The period scheduled can be either 1, 2, 3, or any combination of these numbers. Normally, there will be 2 refueling outages within each period. Scheduled examinations can be completed in either of the refueling outages as appropriate to facilitate other outage activities, but must be completed by the end of the period. For those welds or components not scheduled for examination, the letters "NS" will be inserted in place of an inspection period. For those components only examined when a particular situational requirement is met (e.g., when removed or when access is provided to a normally inaccessible item by a maintenance, repair, or replacement activity), the letters "SR" will be inserted in place of an inspection period. An asterisk(s) in the schedule column denotes a scheduling peculiarity that will be explained at the end of the applicable category.

ITEM NO.	MARK NO.	COMPONENT DESCRIPTION	EXAM METHOD	PERIOD SCHED.	ISI ISO SS-305-
		EXAMINATION CATEGORY: C-A			
C1.10	1E12-B001A-001	SHELL FLANGE TO SHELL CYLINDER #1	UT	1	641-121
C1.20	1E12-B001A-003	SHELL CYLINDER #3	UT	3	641-121
C1.10	1E12-B001B-001	SHELL FLANGE TO SHELL CYLINDER #1	UT	NS	643-121
C1.20	1E12-B001B-003	SHELL CYLINDER #3	UT	NS	643-121
C1.10	1E12-B001C-001	SHELL FLANGE TO SHELL CYLINDER #1	UT	NS	641-122
C1.20	1E12-B001C-003	SHELL CYLINDER #3	UT	NS	641-122
C1.10	1E12-B001D-001	SHELL FLANGE TO SHELL CYLINDER #1	UT	NS	643-123
C1.20	1E12-B001D-003	SHELL CYLINDER #3	UT	NS	643-123
C1.30		DOES NOT EXIST			
		EXAMINATION CATEGORY: C-B			
C2.11		NOT APPLICABLE AT PNPP			
C2.21	1E12-B001A-002	SHELL CYLINDER #1 OUTLET NOZZLE NK-N3	UT, MT	2	641-121
C2.22	1E12-B001A-002-IR	OUTLET NOZZLE NK-N3 INNER RADIUS	UT	2	641-121
C2.21	1E12-B001A-004	SHELL HEAD TO INLET NOZZLE NK-N4	UT, MT	3	641-121
C2.22	1E12-B001A-004-IR	INLET NOZZLE NK-N4 INNER RADIUS	UT	3	641-121
C2.21	1E12-B001B-002	SHELL CYLINDER #1 OUTLET NOZZLE NK-N3	UT, MT	NS	643-121
C2.22	1E12-B001B-002-IR	OUTLET NOZZLE NK-N3 INNER RADIUS	UT	NS	643-121
C2.21	1E12-B001B-004	SHELL HEAD TO INLET NOZZLE NK-N4	UT, MT	NS	643-121
C2.22	1E12-B001B-004-IR	INLET NOZZLE NK-N4 INNER RADIUS	UT	NS	643-121
C2.21	1E12-B001C-002	SHELL CYLINDER #1 OUTLET NOZZLE NK-N3	UT, MT	NS	641-122
C2.22	1E12-B001C-002-IR	OUTLET NOZZLE NK-N3 INNER RADIUS	UT	NS	641-122
C2.21	1E12-B001C-004	SHELL HEAD TO INLET NOZZLE NK-N4	UT, MT	NS	641-122
C2.22	1E12-B001C-004-IR	INLET NOZZLE NK-N4 INNER RADIUS	UT	NS	641-122
C2.21	1E12-B001D-002	SHELL CYLINDER #1 OUTLET NOZZLE NK-N3	UT, MT	NS	643-123
C2.22	1E12-B001D-002-IR	OUTLET NOZZLE NK-N3 INNER RADIUS	UT	NS	643-123

ITEM NO.	MARK NO.	COMPONENT DESCRIPTION	EXAM METHOD	PERIOD SCHED.	ISI ISO SS-305-
		EXAMINATION CATEGORY: C-B			
C2.21	1E12-B001D-004	SHELL HEAD TO INLET NOZZLE NK-N4	UT, MT	NS	643-123
C2.22	1E12-B001D-004-IR	INLET NOZZLE NK-N4 INNER RADIUS	UT	NS	643-123
C2.31		NOT APPLICABLE AT PNPP			
C2.32		NOT APPLICABLE AT PNPP			
C2.33		NOT APPLICABLE AT PNPP			
		EXAMINATION CATEGORY: C-C			
C3.20	1C11-H0031-WA	PIPING SUPPORT WELDED ATTACHMENT	MT	NS	871-103
C3.20	1C11-H0032-WA	PIPING SUPPORT WELDED ATTACHMENT	MT	NS	871-103
C3.20	1C11-H0033-WA	PIPING SUPPORT WELDED ATTACHMENT	MT	1	871-103
C3.20	1C11-H0038-WA	PIPING SUPPORT WELDED ATTACHMENT	MT	NS	871-103
C3.20	1C11-H0039-WA	PIPING SUPPORT WELDED ATTACHMENT	MT	NS	871-103
C3.20	1C11-H0040-WA	PIPING SUPPORT WELDED ATTACHMENT	MT	3	871-104
C3.20	1C11-H0041-WA	PIPING SUPPORT WELDED ATTACHMENT	MT	NS	871-104
C3.20	1C11-H0042-WA	PIPING SUPPORT WELDED ATTACHMENT	MT	NS	871-104
C3.20	1C11-H0043-WA	PIPING SUPPORT WELDED ATTACHMENT	MT	NS	871-104
C3.20	1C11-H0046-WA	PIPING SUPPORT WELDED ATTACHMENT	MT	NS	871-101
C3.20	1C11-H0048-WA	PIPING SUPPORT WELDED ATTACHMENT	MT	NS	871-101
C3.20	1C11-H0049-WA	PIPING SUPPORT WELDED ATTACHMENT	MT	NS	871-101
C3.20	1C11-H0051-WA	PIPING SUPPORT WELDED ATTACHMENT	MT	NS	871-101
C3.20	1C11-H0052-WA	PIPING SUPPORT WELDED ATTACHMENT	MT	NS	871-101
C3.20	1C11-H0053-WA	PIPING SUPPORT WELDED ATTACHMENT	MT	NS	871-101
C3.20	1C11-H0056-WA	PIPING SUPPORT WELDED ATTACHMENT	MT	NS	871-102
C3.20	1C11-H0057-WA	PIPING SUPPORT WELDED ATTACHMENT	MT	NS	871-102
C3.20	1C11-H0060-WA	PIPING SUPPORT WELDED ATTACHMENT	MT	NS	871-102
C3.20	1C11-H0659-WA	PIPING SUPPORT WELDED ATTACHMENT	MT	NS	871-102
C3.20	1C11-H0660-WA	PIPING SUPPORT WELDED ATTACHMENT	MT	NS	871-101
C3.20	1C11-H0661-WA	PIPING SUPPORT WELDED ATTACHMENT	MT	NS	871-101
C3.20	1C11-H0662-WA	PIPING SUPPORT WELDED ATTACHMENT	MT	NS	871-104
C3.20	1C11-H0665-WA	PIPING SUPPORT WELDED ATTACHMENT	MT	1	871-104
C3.20	1C11-H0666-WA	PIPING SUPPORT WELDED ATTACHMENT	MT	NS	871-104
C3.20	1C11-H0667-WA	PIPING SUPPORT WELDED ATTACHMENT	MT	NS	871-103
C3.20	1C11-H0668-WA	PIPING SUPPORT WELDED ATTACHMENT	MT	NS	871-103
C3.20	1C11-H0674-WA	PIPING SUPPORT WELDED ATTACHMENT	MT	NS	871-101
C3.20	1C11-H0675-WA	PIPING SUPPORT WELDED ATTACHMENT	MT	NS	871-102

ITEM NO.	MARK NO.	COMPONENT DESCRIPTION	EXAM METHOD	PERIOD SCHED.	ISI ISO SS-305-
		EXAMINATION CATEGORY: C-C			
C3.10	1E12-B001A-SB1-WA	HEAT EXCHANGER SUPPORT BRACKET WELDED ATTACHMENT	MT	NS	641-121
C3.10	1E12-B001A-SB2-WA	HEAT EXCHANGER SUPPORT BRACKET WELDED ATTACHMENT	MT	NS	641-121
C3.10	1E12-B001A-SB3-WA	HEAT EXCHANGER SUPPORT BRACKET WELDED ATTACHMENT	MT	NS	641-121
C3.10	1E12-B001A-SB4-WA	HEAT EXCHANGER SUPPORT BRACKET WELDED ATTACHMENT	MT	NS	641-121
C3.10	1E12-B001A-SL1-WA	HEAT EXCHANGER GUIDE BRACKET WELDED ATTACHMENT	MT	NS	641-121
C3.10	1E12-B001A-SL2-WA	HEAT EXCHANGER GUIDE BRACKET WELDED ATTACHMENT	MT	NS	641-121
C3.10	1E12-B001A-SL3-WA	HEAT EXCHANGER GUIDE BRACKET WELDED ATTACHMENT	MT	NS	641-121
C3.10	1E12-B001A-SL4-WA	HEAT EXCHANGER GUIDE BRACKET WELDED ATTACHMENT	MT	NS	641-121
C3.10	1E12-B001B-SB1-WA	HEAT EXCHANGER SUPPORT BRACKET WELDED ATTACHMENT	MT	NS	643-121
C3.10	1E12-B001B-SB2-WA	HEAT EXCHANGER SUPPORT BRACKET WELDED ATTACHMENT	MT	NS	643-121
C3.10	1E12-B001B-SB3-WA	HEAT EXCHANGER SUPPORT BRACKET WELDED ATTACHMENT	MT	NS	643-121
C3.10	1E12-B001B-SB4-WA	HEAT EXCHANGER SUPPORT BRACKET WELDED ATTACHMENT	MT	NS	643-121
C3.10	1E12-B001B-SL1-WA	HEAT EXCHANGER GUIDE BRACKET WELDED ATTACHMENT	MT	NS	643-121
C3.10	1E12-B001B-SL2-WA	HEAT EXCHANGER GUIDE BRACKET WELDED ATTACHMENT	MT	NS	643-121
C3.10	1E12-B001B-SL3-WA	HEAT EXCHANGER GUIDE BRACKET WELDED ATTACHMENT	MT	NS	643-121
C3.10	1E12-B001B-SL4-WA	HEAT EXCHANGER GUIDE BRACKET WELDED ATTACHMENT	MT	NS	643-121
C3.10	1E12-B001C-SB1-WA	HEAT EXCHANGER SUPPORT BRACKET WELDED ATTACHMENT	MT	NS	641-122
C3.10	1E12-B001C-SB2-WA	HEAT EXCHANGER SUPPORT BRACKET WELDED ATTACHMENT	MT	NS	641-122
C3.10	1E12-B001C-SB3-WA	HEAT EXCHANGER SUPPORT BRACKET WELDED ATTACHMENT	MT	NS	641-122
C3.10	1E12-B001C-SB4-WA	HEAT EXCHANGER SUPPORT BRACKET WELDED ATTACHMENT	MT	NS	643-122
C3.10	1E12-B001C-SL1-WA	HEAT EXCHANGER GUIDE BRACKET WELDED ATTACHMENT	MT	NS	643-122
C3.10	1E12-B001C-SL2-WA	HEAT EXCHANGER GUIDE BRACKET WELDED ATTACHMENT	MT	NS	643-122
C3.10	1E12-B001C-SL3-WA	HEAT EXCHANGER GUIDE BRACKET WELDED ATTACHMENT	MT	NS	643-122
C3.10	1E12-B001C-SL4-WA	HEAT EXCHANGER GUIDE BRACKET WELDED ATTACHMENT	MT	NS	643-122
C3.10	1E12-B001D-SB1-WA	HEAT EXCHANGER SUPPORT BRACKET WELDED ATTACHMENT	MT	NS	643-123
C3.10	1E12-B001D-SB2-WA	HEAT EXCHANGER SUPPORT BRACKET WELDED ATTACHMENT	MT	NS	643-123
C3.10	1E12-B001D-SB3-WA	HEAT EXCHANGER SUPPORT BRACKET WELDED ATTACHMENT	MT	3*	643-123
C3.10	1E12-B001D-SB4-WA	HEAT EXCHANGER SUPPORT BRACKET WELDED ATTACHMENT	MT	NS	643-123
C3.10	1E12-B001D-SL1-WA	HEAT EXCHANGER GUIDE BRACKET WELDED ATTACHMENT	MT	NS	643-123
C3.10	1E12-B001D-SL2-WA	HEAT EXCHANGER GUIDE BRACKET WELDED ATTACHMENT	MT	NS	643-123
C3.10	1E12-B001D-SL3-WA	HEAT EXCHANGER GUIDE BRACKET WELDED ATTACHMENT	MT	NS	643-123
C3.10	1E12-B001D-SL4-WA	HEAT EXCHANGER GUIDE BRACKET WELDED ATTACHMENT	MT	NS	643-123

ITEM NO.	MARK NO.	COMPONENT DESCRIPTION	EXAM METHOD	PERIOD SCHED.	ISI ISO SS-305-
		EXAMINATION CATEGORY: C-C			
C3.20	1E12-H0044-WA	PIPING SUPPORT WELDED ATTACHMENT	MT	NS	642-137
C3.20	1E12-H0093-WA	PIPING SUPPORT WELDED ATTACHMENT	MT	NS	642-121
C3.20	1E12-H0116-WA	PIPING SUPPORT WELDED ATTACHMENT	MT	NS	642-119
C3.20	1E12-H0118-WA	PIPING SUPPORT WELDED ATTACHMENT	MT	NS	642-119
C3.20	1E12-H0120-WA	PIPING SUPPORT WELDED ATTACHMENT	MT	2	643-110
C3.20	1E12-H0122-WA	PIPING SUPPORT WELDED ATTACHMENT	MT	NS	642-132
C3.20	1E12-H0164-WA	PIPING SUPPORT WELDED ATTACHMENT	MT	NS	643-117
C3.20	1E12-H0169-WA	PIPING SUPPORT WELDED ATTACHMENT	MT	NS	642-111
C3.20	1E12-H0173-WA	PIPING SUPPORT WELDED ATTACHMENT	MT	NS	642-110
C3.20	1E12-H0186-WA	PIPING SUPPORT WELDED ATTACHMENT	MT	NS	643-101
C3.20	1E12-H0187-WA	PIPING SUPPORT WELDED ATTACHMENT	MT	2	643-101
C3.20	1E12-H0234-WA	PIPING SUPPORT WELDED ATTACHMENT	MT	NS	641-119
C3.20	1E12-H0263-WA	PIPING SUPPORT WELDED ATTACHMENT	MT	NS	642-127
C3.20	1E12-H0281-WA	PIPING SUPPORT WELDED ATTACHMENT	MT	NS	643-102
C3.20	1E12-H0289-WA	PIPING SUPPORT WELDED ATTACHMENT	MT	NS	641-101
C3.20	1E12-H0290-WA	PIPING SUPPORT WELDED ATTACHMENT	MT	NS	641-101
C3.20	1E12-H0308-WA	PIPING SUPPORT WELDED ATTACHMENT	MT	NS	642-105
C3.20	1E12-H0311-WA	PIPING SUPPORT WELDED ATTACHMENT	MT	NS	642-107
C3.20	1E12-H0312-WA	PIPING SUPPORT WELDED ATTACHMENT	MT	NS	642-107
C3.20	1E12-H0322-WA	PIPING SUPPORT WELDED ATTACHMENT	MT	NS	642-103
C3.20	1E12-H0323-WA	PIPING SUPPORT WELDED ATTACHMENT	MT	NS	642-103
C3.20	1E12-H0328-WA	PIPING SUPPORT WELDED ATTACHMENT	MT	NS	641-102
C3.20	1E12-H0357-WA	PIPING SUPPORT WELDED ATTACHMENT	MT	NS	642-116
C3.20	1E12-H0358-WA	PIPING SUPPORT WELDED ATTACHMENT	MT	NS	642-116
C3.20	1E12-H0359-WA	PIPING SUPPORT WELDED ATTACHMENT	MT	NS	642-116
C3.20	1E12-H0360-WA	PIPING SUPPORT WELDED ATTACHMENT	MT	1	642-116
C3.20	1E12-H0367-WA	PIPING SUPPORT WELDED ATTACHMENT	MT	NS	642-114
C3.20	1E12-H0368-WA	PIPING SUPPORT WELDED ATTACHMENT	MT	NS	642-114
C3.20	1E12-H0369-WA	PIPING SUPPORT WELDED ATTACHMENT	MT	3	642-114
C3.20	1E12-H0372-WA	PIPING SUPPORT WELDED ATTACHMENT	MT	2	642-113
C3.20	1E12-H0390-WA	PIPING SUPPORT WELDED ATTACHMENT	MT	NS	642-101
C3.20	1E12-H0401-WA	PIPING SUPPORT WELDED ATTACHMENT	MT	NS	642-109
C3.20	1E12-H0412-WA	PIPING SUPPORT WELDED ATTACHMENT	MT	NS	643-117
C3.20	1E12-H0450-WA	PIPING SUPPORT WELDED ATTACHMENT	MT	NS	643-104
C3.20	1E12-H0451-WA	PIPING SUPPORT WELDED ATTACHMENT	MT	NS	641-104
C3.20	1E12-H0463-WA	PIPING SUPPORT WELDED ATTACHMENT	MT	NS	641-110
C3.20	1E12-H0464-WA	PIPING SUPPORT WELDED ATTACHMENT	MT	NS	641-109
C3.20	1E12-H0475-WA	PIPING SUPPORT WELDED ATTACHMENT	MT	NS	642-121
C3.20	1E12-H0484-WA	PIPING SUPPORT WELDED ATTACHMENT	MT	NS	642-129
C3.20	1E12-H0488-WA	PIPING SUPPORT WELDED ATTACHMENT	MT	NS	642-129
C3.20	1E12-H0489-WA	PIPING SUPPORT WELDED ATTACHMENT	MT	NS	642-130
C3.20	1E12-H0527-WA	PIPING SUPPORT WELDED ATTACHMENT	MT	NS	641-105

ITEM NO.	MARK NO.	COMPONENT DESCRIPTION	EXAM METHOD	PERIOD SCHED.	ISI ISO SS-305-
		EXAMINATION CATEGORY: C-C			
C3.20	1E12-H0529-WA	PIPING SUPPORT WELDED ATTACHMENT	MT	NS	641-106
C3.20	1E12-H0562-WA	PIPING SUPPORT WELDED ATTACHMENT	MT	NS	643-110
C3.20	1E12-H0670-WA	PIPING SUPPORT WELDED ATTACHMENT	MT	NS	642-137
C3.20	1E12-H0708-WA	PIPING SUPPORT WELDED ATTACHMENT	MT	3	643-117
C3.20	1E12-H0720-WA	PIPING SUPPORT WELDED ATTACHMENT	MT	NS	642-133
C3.20	1E12-H0721-WA	PIPING SUPPORT WELDED ATTACHMENT	MT	NS	642-121
C3.20	1E12-H0730-WA	PIPING SUPPORT WELDED ATTACHMENT	MT	NS	642-103
C3.20	1E12-H0731-WA	PIPING SUPPORT WELDED ATTACHMENT	MT	NS	642-101
C3.20	1E12-P105-WA	PENETRATION P105 TO PROCESS PIPE WELDED ATTACHMENT	MT	NS	642-121
C3.20	1E12-P113-WA	PENETRATION P113 TO PROCESS PIPE WELDED ATTACHMENT	MT	NS	642-126
C3.20	1E12-P407-WA	PENETRATION P407 TO PROCESS PIPE WELDED ATTACHMENT	MT	NS	642-133
C3.20	1E12-P412-WA	PENETRATION P412 TO PROCESS PIPE WELDED ATTACHMENT	MT	NS	642-137
C3.20	1E21-H0020-WA	PIPING SUPPORT WELDED ATTACHMENT	MT	2	705-102
C3.20	1E21-H0023-WA	PIPING SUPPORT WELDED ATTACHMENT	MT	NS	705-103
C3.20	1E21-H0026-WA	PIPING SUPPORT WELDED ATTACHMENT	MT	NS	705-101
C3.20	1E21-H0035-WA	PIPING SUPPORT WELDED ATTACHMENT	MT	1	705-104
C3.20	1E21-H0043-WA	PIPING SUPPORT WELDED ATTACHMENT	MT	NS	705-106
C3.20	1E21-H0080-WA	PIPING SUPPORT WELDED ATTACHMENT	MT	NS	705-101
ECP #04-0270 DELETED THE SUPPORT 1E21-0087, WELDED ATTACHMENT 1E21-0087-WA STILL EXISTS BUT IS NOW EXEMPT.					
C3.20	1E22-H0027-WA	PIPING SUPPORT WELDED ATTACHMENT	MT	NS	701-102
C3.20	1E22-H0038-WA	PIPING SUPPORT WELDED ATTACHMENT	MT	NS	701-101
C3.20	1E22-H0039-WA	PIPING SUPPORT WELDED ATTACHMENT	MT	NS	701-101
C3.20	1E22-H0042-WA	PIPING SUPPORT WELDED ATTACHMENT	MT	NS	701-103
C3.20	1E22-H0054-WA	PIPING SUPPORT WELDED ATTACHMENT	MT	NS	701-101
C3.20	1E22-H0062-WA	PIPING SUPPORT WELDED ATTACHMENT	MT	NS	701-108
C3.20	1E22-H0085-WA	PIPING SUPPORT WELDED ATTACHMENT	MT	3	701-112
C3.20	1E22-H0107-WA	PIPING SUPPORT WELDED ATTACHMENT	MT	NS	701-105
C3.30	1E51-C001-A-WA	PUMP SUPPORT WELDED ATTACHMENT	MT	3(IR-012)	631-109
C3.30	1E51-C001-B-WA	PUMP SUPPORT WELDED ATTACHMENT	MT	NS	631-109
C3.30	1E51-C001-C-WA	PUMP SUPPORT WELDED ATTACHMENT	MT	NS	631-109
C3.30	1E51-C001-D-WA	PUMP SUPPORT WELDED ATTACHMENT	MT	NS	631-109
C3.20	1E51-H0026-WA	PIPING SUPPORT WELDED ATTACHMENT	MT	1	632-105
C3.20	1E51-H0041-WA	PIPING SUPPORT WELDED ATTACHMENT	MT	NS	631-104
C3.20	1E51-H0042-WA	PIPING SUPPORT WELDED ATTACHMENT	MT	NS	631-102
C3.20	1E51-H0055-WA	PIPING SUPPORT WELDED ATTACHMENT	MT	NS	632-104
C3.20	1E51-H0056-WA	PIPING SUPPORT WELDED ATTACHMENT	MT	NS	632-104

ITEM NO.	MARK NO.	COMPONENT DESCRIPTION	EXAM METHOD	PERIOD SCHED.	ISI ISO SS-305-
		EXAMINATION CATEGORY: C-C			
C3.20	1E51-P101-WA	PENETRATION P101 TO PROCESS PIPE WELDED ATTACHMENT	MT	NS	631-112
C3.20	1G33-H0273-WA	PIPING SUPPORT WELDED ATTACHMENT	MT	NS	672-102
C3.20	1G33-P132-WA	PENETRATION P132 TO PROCESS PIPE WELDED ATTACHMENT	MT	NS	672-102
C3.20	1N11-H0221-WA	PIPING SUPPORT WELDED ATTACHMENT	MT	NS	605-108
C3.20	1N11-H0222-WA	PIPING SUPPORT WELDED ATTACHMENT	MT	NS	605-110
C3.20	1N11-H0223-WA	PIPING SUPPORT WELDED ATTACHMENT	MT	NS	605-107
C3.20	1N11-H0224-WA	PIPING SUPPORT WELDED ATTACHMENT	MT	NS	605-109
C3.20	1N27-H0031-WA	PIPING SUPPORT WELDED ATTACHMENT	MT	NS	082-104
C3.20	1N27-H0032-WA	PIPING SUPPORT WELDED ATTACHMENT	MT	NS	082-101
C3.20	1P45-H0611-WA	PIPING SUPPORT WELDED ATTACHMENT	MT	NS	792-113
C3.40		NOT APPLICABLE AT PNPP			

* Only one required per Code Case N-700

		EXAMINATION CATEGORY: C-D			
C4.10		NOT APPLICABLE AT PNPP			
C4.20		NOT APPLICABLE AT PNPP			
C4.30	1E21-C001-1B	LPCS PUMP, STUD #1	UT	1	705-113
C4.30	1E21-C001-2B	LPCS PUMP, STUD #2	UT	1	705-113
C4.30	1E21-C001-3B	LPCS PUMP, STUD #3	UT	1	705-113
C4.30	1E21-C001-4B	LPCS PUMP, STUD #4	UT	1	705-113
C4.30	1E21-C001-5B	LPCS PUMP, STUD #5	UT	1	705-113
C4.30	1E21-C001-6B	LPCS PUMP, STUD #6	UT	1	705-113
C4.30	1E21-C001-7B	LPCS PUMP, STUD #7	UT	1	705-113
C4.30	1E21-C001-8B	LPCS PUMP, STUD #8	UT	1	705-113
C4.30	1E21-C001-9B	LPCS PUMP, STUD #9	UT	2	705-113
C4.30	1E21-C001-10B	LPCS PUMP, STUD #10	UT	2	705-113
C4.30	1E21-C001-11B	LPCS PUMP, STUD #11	UT	2	705-113
C4.30	1E21-C001-12B	LPCS PUMP, STUD #12	UT	2	705-113
C4.30	1E21-C001-13B	LPCS PUMP, STUD #13	UT	2	705-113
C4.30	1E21-C001-14B	LPCS PUMP, STUD #14	UT	2	705-113
C4.30	1E21-C001-15B	LPCS PUMP, STUD #15	UT	2	705-113
C4.30	1E21-C001-16B	LPCS PUMP, STUD #16	UT	2	705-113
C4.30	1E21-C001-17B	LPCS PUMP, STUD #17	UT	3	705-113
C4.30	1E21-C001-18B	LPCS PUMP, STUD #18	UT	3	705-113

ITEM NO.	MARK NO.	COMPONENT DESCRIPTION	EXAM METHOD	PERIOD SCHED.	ISI ISO SS-305-
		EXAMINATION CATEGORY: C-D			
C4.30	1E21-C001-19B	LPCS PUMP, STUD #19	UT	3	705-113
C4.30	1E21-C001-20B	LPCS PUMP, STUD #20	UT	3	705-113
C4.30	1E21-C001-21B	LPCS PUMP, STUD #21	UT	3	705-113
C4.30	1E21-C001-22B	LPCS PUMP, STUD #22	UT	3	705-113
C4.30	1E21-C001-23B	LPCS PUMP, STUD #23	UT	3	705-113
C4.30	1E21-C001-24B	LPCS PUMP, STUD #24	UT	3	705-113
C4.40		NOT APPLICABLE AT PNPP			
		EXAMINATION CATEGORY: C-F-1			
C5.11		NOT APPLICABLE AT PNPP			
C5.21		NOT APPLICABLE AT PNPP			
C5.30		NOT APPLICABLE AT PNPP			
C5.40		NOT APPLICABLE AT PNPP			
		EXAMINATION CATEGORY: C-F-2			
C5.51	1B21-0017	26″ VALVE B21-F028C TO PIPE	UT	NS	605-109
C5.51	1B21-0018	26″ PIPE TO 28″ PIPE	UT	1	605-109
C5.51	1B21-0019	28″ PIPE TO VALVE N11-F020C	UT	NS	605-109
C5.51	1B21-0052	26″ VALVE B21-F028D TO PIPE	UT	NS	605-110
C5.51	1B21-0053	26″ PIPE TO 28″ PIPE	UT	NS	605-110
C5.51	1B21-0054	28″ PIPE TO VALVE N11-F020D	UT	2	605-110
C5.51	1B21-0094	26″ VALVE B21-F028B TO PIPE	UT	NS	605-108
C5.51	1B21-0095	26″ PIPE TO 28″ PIPE	UT	NS	605-108
C5.51	1B21-0096	28″ PIPE TO VALVE N11-F020B	UT	NS	605-108
C5.51	1B21-0130	26″ VALVE B21-F028A TO PIPE	UT	NS	605-107
C5.51	1B21-0131	26″ PIPE TO 28″ PIPE	UT	NS	605-107
C5.51	1B21-0132	28″ PIPE TO VALVE N11-F020A	UT	NS	605-107
C5.51	1C11-0001	8″ CAP TO PIPE	UT	NS	871-103
C5.51	1C11-0002	8″ PIPE TO ELBOW	UT	NS	871-103
C5.51	1C11-0003	8″ ELBOW TO TEE	UT	2	871-103
C5.51	1C11-0004	8″ TEE TO ELBOW	UT	NS	871-103
C5.51	1C11-0005	8″ ELBOW TO 8″ X 12″ REDUCER	UT	NS	871-103
C5.51	1C11-0006	8″ X 12″ REDUCER TO PIPE	UT	NS	871-103
C5.51	1C11-0007	12″ PIPE TO CAP	UT	2	871-103
C5.51	1C11-0008	8″ TEE TO PIPE	UT	NS	871-103
C5.51	1C11-0009	8″ PIPE TO TEE	UT	NS	871-103
C5.51	1C11-0010	8″ TEE TO PIPE	UT	NS	871-103
C5.51	1C11-0010A	8″ PIPE TO PIPE	UT	NS	871-103

ITEM NO.	MARK NO.	COMPONENT DESCRIPTION	EXAM METHOD	PERIOD SCHED.	ISI ISO SS-305-
		EXAMINATION CATEGORY: C-F-2			
C5.51	1C11-0011	8″ TEE TO PIPE	UT	NS	871-103
C5.51	1C11-0012	8″ PIPE TO CAP	UT	NS	871-103
C5.51	1C11-0013	8″ PIPE TO TEE	UT	NS	871-103
C5.51	1C11-0014	8″ TEE TO PIPE	UT	NS	871-103
C5.51	1C11-0015	8″ TEE TO PIPE	UT	NS	871-103
C5.51	1C11-0015A	8″ PIPE TO PIPE	UT	NS	871-103
C5.51	1C11-0016	8″ PIPE TO CAP	UT	NS	871-103
C5.51	1C11-0017	8″ PIPE BEND TO TEE	UT	NS	871-103
C5.51	1C11-0017A	8″ PIPE TO PIPE BEND	UT	NS	871-103
C5.51	1C11-0018	8″ TEE TO PIPE BEND	UT	NS	871-103
C5.51	1C11-0019	8″ TEE TO PIPE BEND	UT	NS	871-103
C5.51	1C11-0020	8″ PIPE BEND TO TEE	UT	NS	871-103
C5.51	1C11-0021	8″ TEE TO PIPE	UT	NS	871-103
C5.51	1C11-0022	8″ PIPE TO CAP	UT	NS	871-103
C5.51	1C11-0023	8″ TEE TO PIPE	UT	NS	871-103
C5.51	1C11-0024	8″ PIPE TO ELBOW	UT	NS	871-103
C5.51	1C11-0025	8″ ELBOW TO PIPE	UT	NS	871-103
C5.51	1C11-0026	8″ PIPE TO CAP	UT	NS	871-103
C5.51	1C11-0027	8″ PIPE BEND TO TEE	UT	NS	871-104
C5.51	1C11-0028	8″ TEE TO PIPE	UT	NS	871-104
C5.51	1C11-0029	8″ TEE TO PIPE	UT	NS	871-104
C5.51	1C11-0030	8″ CAP TO PIPE	UT	2	871-104
C5.51	1C11-0031	8″ PIPE TO TEE	UT	NS	871-104
C5.51	1C11-0032	8″ TEE TO PIPE	UT	NS	871-104
C5.51	1C11-0033	8″ PIPE TO TEE	UT	3	871-104
C5.51	1C11-0034	8″ PIPE TO CAP	UT	NS	871-104
C5.51	1C11-0035	8″ PIPE TO TEE	UT	NS	871-104
C5.51	1C11-0036	8″ TEE TO PIPE	UT	NS	871-104
C5.51	1C11-0037	8″ TEE TO PIPE	UT	NS	871-104
C5.51	1C11-0038	8″ PIPE TO CAP	UT	NS	871-104
C5.51	1C11-0039	8″ PIPE TO ELBOW	UT	NS	871-104
C5.51	1C11-0040	8″ ELBOW TO PIPE	UT	NS	871-104
C5.51	1C11-0041	8″ PIPE TO CAP	UT	NS	871-104
C5.51	1C11-0042	8″ CAP TO PIPE	UT	NS	871-101
C5.51	1C11-0043	8″ PIPE TO ELBOW	UT	NS	871-101
C5.51	1C11-0044	8″ ELBOW TO PIPE	UT	NS	871-101
C5.51	1C11-0045	8″ PIPE TO TEE	UT	NS	871-101
C5.51	1C11-0046	8″ TEE TO 8″ X 12″ REDUCING ELBOW	UT	NS	871-101
C5.51	1C11-0047	8″ X 12″ REDUCING ELBOW TO PIPE	UT	3	871-101

ITEM NO.	MARK NO.	COMPONENT DESCRIPTION	EXAM METHOD	PERIOD SCHED.	ISI ISO SS-305-
		EXAMINATION CATEGORY: C-F-2			
C5.51	1C11-0048	12" PIPE TO CAP	UT	NS	871-101
C5.51	1C11-0049	8" TEE TO PIPE	UT	NS	871-101
C5.51	1C11-0050	8" PIPE TO TEE	UT	NS	871-101
C5.51	1C11-0051	8" TEE TO PIPE	UT	NS	871-101
C5.51	1C11-0052	8" TEE TO PIPE	UT	NS	871-101
C5.51	1C11-0053	8" PIPE TO CAP	UT	NS	871-101
C5.51	1C11-0054	8" PIPE TO TEE	UT	NS	871-101
C5.51	1C11-0055	8" TEE TO PIPE	UT	NS	871-101
C5.51	1C11-0056	8" TEE TO PIPE	UT	NS	871-101
C5.51	1C11-0057	8" PIPE TO CAP	UT	NS	871-101
C5.51	1C11-0058	8" PIPE TO TEE	UT	NS	871-101
C5.51	1C11-0059	8" TEE TO PIPE	UT	NS	871-101
C5.51	1C11-0060	8" PIPE TO TEE	UT	NS	871-101
C5.51	1C11-0060A	8" PIPE TO PIPE	UT	NS	871-101
C5.51	1C11-0061	8" PIPE TO CAP	UT	NS	871-101
C5.51	1C11-0062	8" PIPE BEND TO TEE	UT	NS	871-101
C5.51	1C11-0063	8" TEE TO PIPE	UT	NS	871-101
C5.51	1C11-0064	8" PIPE TO TEE	UT	NS	871-101
C5.51	1C11-0065	8" TEE TO PIPE	UT	NS	871-101
C5.51	1C11-0066	8" PIPE TO CAP	UT	NS	871-101
C5.51	1C11-0067	8" TEE TO PIPE	UT	NS	871-101
C5.51	1C11-0068	8" PIPE TO ELBOW	UT	NS	871-101
C5.51	1C11-0069	8" ELBOW TO PIPE	UT	NS	871-101
C5.51	1C11-0070	8" PIPE TO CAP	UT	1	871-101
C5.51	1C11-0071	8" TEE TO PIPE	UT	NS	871-101
C5.51	1C11-0072	8" PIPE TO TEE	UT	NS	871-102
C5.51	1C11-0073	8" TEE TO PIPE	UT	NS	871-102
C5.51	1C11-0074	8" TEE TO PIPE	UT	NS	871-102
C5.51	1C11-0075	8" PIPE TO CAP	UT	NS	871-102
C5.51	1C11-0076	8" PIPE TO TEE	UT	NS	871-102
C5.51	1C11-0076A	8" PIPE TO PIPE	UT	NS	871-102
C5.51	1C11-0077	8" TEE TO PIPE	UT	NS	871-102
C5.51	1C11-0078	8" TEE TO PIPE	UT	1	871-102
C5.51	1C11-0079	8" PIPE TO CAP	UT	NS	871-102
C5.51	1C11-0080	8" PIPE TO ELBOW.	UT	NS	871-102

ITEM NO.	MARK NO.	COMPONENT DESCRIPTION	EXAM METHOD	PERIOD SCHED.	ISI ISO SS-305-
		EXAMINATION CATEGORY: C-F-2			
C5.51	1C11-0081	8″ ELBOW TO PIPE	UT	NS	871-102
C5.51	1C11-0082	8″ PIPE TO CAP	UT	NS	871-102
C5.51	1E12-0013	20″ PIPE BEND TO VALVE F008	UT	NS	642-101
C5.81	1E12-0014	20″ PIPE BEND TO 20″ X 8″ WELDOLET	N/A	NS*	642-101
C5.51	1E12-0015	20″ X 8″ WELDOLET TO 8″ PIPE (<.375″ NWT)	N/A	NS	642-101
C5.51	1E12-0016	20″ X 20″ X 20″ TEE TO PIPE BEND	UT	NS	642-101
C5.51	1E12-0017	20″ PIPE TO 20″ X 20″ X 20″ TEE	UT	NS	642-101
C5.51	1E12-0017A	20″ X 18″ REDUCER TO 20″ PIPE	UT	NS	642-101
C5.51	1E12-0018	18″ PIPE TO 20″ X 18″ REDUCER	UT	NS	642-101
C5.51	1E12-0019	18″ ELBOW TO PIPE	UT	NS	643-103
C5.51	1E12-0020	18″ PIPE TO ELBOW	UT	NS	643-103
C5.51	1E12-0021	18″ ELBOW TO PIPE	UT	NS	642-105
C5.51	1E12-0022	18″ PIPE TO ELBOW	UT	NS	642-105
C5.51	1E12-0023	18″ VALVE F006A TO PIPE	UT	NS	642-105
C5.51	1E12-0024	18″ PIPE TO VALVE F006A	UT	NS	642-105
C5.51	1E12-0025	18″ ELBOW TO PIPE	UT	NS	642-105
C5.51	1E12-0026	18″ PIPE TO ELBOW	UT	NS	642-105
C5.51	1E12-0027	18″ ELBOW TO PIPE	UT	NS	642-105
C5.51	1E12-0028	18″ PIPE TO ELBOW	UT	NS	642-105
C5.51	1E12-0029	24″ X 24″ X 18″ TEE TO 18″ PIPE	UT	3	641-101
C5.51	1E12-0030	24″ X 24″ X 18″ TEE TO 24″ PIPE	UT	NS	641-101
C5.51	1E12-0031	24″ PIPE TO ELBOW	UT	NS	641-101
C5.51	1E12-0032	24″ ELBOW TO PIPE	UT	NS	641-101
C5.51	1E12-0033	24″ PIPE TO FLANGE	UT	NS	641-101
C5.51	1E12-0034	24″ PIPE TO 24″ X 24″ X 18″ TEE	UT	NS	641-101
C5.51	1E12-0035	24″ PIPE TO ELBOW	UT	NS	641-101
C5.51	1E12-0036	24″ ELBOW TO PIPE	UT	NS	641-101
C5.51	1E12-0037	24″ PIPE TO ELBOW	UT	NS	641-101
C5.51	1E12-0038	24″ X 24″ X 16″ TEE TO 24″ PIPE	UT	NS	641-101
C5.51	1E12-0039	24″ X 24″ X 16″ TEE TO 16″ PIPE	UT	NS	641-101
C5.51	1E12-0039A	16″ PIPE TO FLANGE, LPCS INTERTIE	UT	NS	641-101
C5.51	1E12-0040	24″ PIPE TO 24″ X 24″ X 16″ TEE	UT	NS	641-101
C5.51	1E12-0041	24″ ELBOW TO PIPE	UT	NS	641-101
C5.51	1E12-0042	24″ PIPE TO ELBOW	UT	2	641-101
C5.51	1E12-0043	24″ ELBOW TO PIPE	UT	NS	642-107

ITEM NO.	MARK NO.	COMPONENT DESCRIPTION	EXAM METHOD	PERIOD SCHED.	ISI ISO SS-305-
		EXAMINATION CATEGORY: C-F-2			
C5.51	1E12-0044	24" PIPE TO ELBOW	UT	NS	642-107
C5.51	1E12-0045	24" VALVE F004A TO PIPE	UT	NS	642-107
C5.51	1E12-0046	24" PIPE TO VALVE F004A	UT	1	642-107
C5.51	1E12-0047	24" ELBOW TO PIPE	UT	NS	642-107
C5.51	1E12-0048	24" PENETRATION P102 PROCESS PIPE TO ELBOW	UT	NS	642-107
C5.51	1E12-0049	20" TEE TO PIPE	UT	NS	642-101
C5.51	1E12-0050	20" PIPE TO 20" X 20" X 18" TEE	UT	NS	642-102
C5.51	1E12-0051	18" PIPE TO ELBOW	UT	NS	642-109
C5.51	1E12-0052	18" ELBOW TO PIPE	UT	NS	642-109
C5.51	1E12-0053	18" PIPE TO ELBOW	UT	NS	642-110
C5.51	1E12-0054	18" ELBOW TO PIPE	UT	NS	642-110
C5.51	1E12-0055	18" PIPE TO VALVE F067	UT	3	642-110
C5.51	1E12-0056	18" PIPE TO VALVE F068	UT	3	642-110
C5.51	1E12-0057	24" X 18" REDUCING ELBOW TO 18" PIPE	UT	NS	642-111
C5.51	1E12-0058	24" PIPE TO 24" X 18" REDUCING ELBOW	UT	NS	642-111
C5.51	1E12-0059	24" X 24" X 24" TEE TO PIPE	UT	NS	642-111
C5.51	1E12-0060	24" X 24" X 24" TEE TO PIPE	UT	NS	642-111
C5.51	1E12-0061	24" PIPE TO ELBOW	UT	NS	642-111
C5.51	1E12-0062	24" ELBOW TO PIPE	UT	NS	642-111
C5.51	1E12-0063	24" PIPE TO ELBOW	UT	NS	642-111
C5.51	1E12-0064	24" ELBOW TO PIPE	UT	NS	642-111
C5.51	1E12-0064A	24" PIPE TO FLANGE	UT	NS	642-111
C5.51	1E12-0064B	24" FLANGE TO PIPE	UT	NS	642-111
C5.51	1E12-0064C	24" PIPE TO FLANGE	UT	2	642-111
C5.51	1E12-0065	24" PIPE TO 24" X 24" X 24" TEE	UT	NS	642-111
C5.51	1E12-0066	24" ELBOW TO PIPE	UT	2	642-112
C5.51	1E12-0067	24" PIPE TO ELBOW	UT	NS	642-112
C5.51	1E12-0068	24" VALVE F105 TO PIPE	UT	NS	642-112
C5.51	1E12-0069	24" PIPE BEND TO VALVE F105	UT	NS	642-112
C5.51	1E12-0069A	24" PIPE TO PIPE BEND	UT	2	642-112
C5.51	1E12-0070	24" PEN. P403 TO PIPE BEND	UT	NS	642-112
C5.51	1E12-0071	20" TEE TO PIPE	UT	NS	642-102
C5.51	1E12-0072	20" PIPE TO 20" X 18" REDUCING ELBOW	UT	NS	642-102
C5.51	1E12-0073	20" X 18" REDUCING ELBOW TO 18" PIPE	UT	NS	642-102
C5.51	1E12-0074	18" PIPE TO ELBOW	UT	NS	642-113

ITEM NO.	MARK NO.	COMPONENT DESCRIPTION	EXAM METHOD	PERIOD SCHED.	ISI ISO SS-305-
		EXAMINATION CATEGORY: C-F-2			
C5.51	1E12-0075	18″ ELBOW TO PIPE	UT	NS	642-113
C5.51	1E12-0076	18″ PIPE TO VALVE F006B	UT	NS	642-113
C5.51	1E12-0077	18″ PIPE TO VALVE F006B	UT	NS	642-113
C5.51	1E12-0078	18″ ELBOW TO PIPE	UT	NS	642-113
C5.51	1E12-0079	18″ PIPE TO ELBOW	UT	NS	642-113
C5.51	1E12-0080	18″ PIPE TO ELBOW	UT	NS	642-113
C5.51	1E12-0081	18″ PIPE TO ELBOW	UT	NS	642-113
C5.51	1E12-0082	24″ X 24″ X 18″ TEE TO 18″ PIPE	UT	2	642-114
C5.51	1E12-0083	24″ X 24″ X 18″ TEE TO 24″ PIPE	UT	NS	642-114
C5.51	1E12-0084	24″ PIPE TO ELBOW	UT	NS	642-114
C5.51	1E12-0085	24″ ELBOW TO PIPE	UT	NS	642-114
C5.51	1E12-0086	24″ PIPE TO FLANGE	UT	3	642-114
C5.51	1E12-0087	24″ PIPE TO 24″ X 24″ X 18″ TEE	UT	NS	642-114
C5.51	1E12-0088	24″ ELBOW TO PIPE	UT	NS	642-114
C5.51	1E12-0089	24″ ELBOW TO ELBOW	UT	NS	642-114
C5.51	1E12-0090	24″ PIPE TO ELBOW	UT	2	642-114
C5.51	1E12-0091	24″ ELBOW TO PIPE	UT	NS	642-114
C5.51	1E12-0092	24″ PIPE TO ELBOW	UT	NS	642-114
C5.51	1E12-0093	24″ ELBOW TO PIPE	UT	NS	642-116
C5.51	1E12-0094	24″ PIPE TO ELBOW	UT	NS	642-116
C5.51	1E12-0095	24″ VALVE F004B TO PIPE	UT	1	642-116
C5.51	1E12-0096	24″ PIPE TO VALVE F004B	UT	NS	642-116
C5.51	1E12-0096A	24″ ELBOW TO PIPE	UT	NS	642-116
C5.51	1E12-0096AA	24″ PIPE TO PIPE	UT	NS	642-116
C5.51	1E12-0097	24″ PENETRATION P402 PROCESS PIPE TO ELBOW	UT	NS	642-116
C5.51	1E12-0098	20″ X 20″ X 18″ TEE TO PIPE	UT	NS	642-102
C5.81	1E12-0099	24″ PIPE TO 24″ X 8″ WELDOLET	N/A	NS*	642-111
C5.81	1E12-0100	24″ PIPE TO 24″ X 8″ WELDOLET	N/A	NS*	642-114
C5.51	1E12-0101	24″ X 8″ WELDOLET TO 8″ PIPE CAP	UT	NS	642-114
C5.51	1E12-0102	24″ FLANGE TO PIPE	UT	NS	642-114
C5.51	1E12-0102A	24″ PIPE TO FLANGE	UT	NS	642-114
C5.51	1E12-0102B	24″ FLANGE TO PIPE	UT	NS	642-114
C5.51	1E12-0103	24″ PIPE TO FLANGE	UT	NS	642-114
C5.81	1E12-0104	24″ PIPE TO 24″ X 10″ WELDOLET	N/A	NS*	642-114
C5.81	1E12-0105	24″ PIPE TO 24″ X 8″ WELDOLET	N/A	NS*	642-114

ITEM NO.	MARK NO.	COMPONENT DESCRIPTION	EXAM METHOD	PERIOD SCHED.	ISI ISO SS-305-
		EXAMINATION CATEGORY: C-F-2			
C5.51	1E12-0106	24" X 8" WELDOLET TO 8" PIPE CAP (<.375" NWT)	N/A	NS	641-101
C5.81	1E12-0107	24" PIPE TO 24" X 8" WELDOLET	N/A	NS*	641-101
C5.51	1E12-0108	24" PIPE TO FLANGE	UT	NS	641-101
C5.51	1E12-0108A	24" FLANGE TO PIPE	UT	3	641-101
C5.51	1E12-0108B	24" PIPE TO FLANGE	UT	NS	641-101
C5.51	1E12-0109	24" FLANGE TO PIPE	UT	NS	641-101
C5.81	1E12-0110	24" PIPE TO 24" X 8" WELDOLET	N/A	NS*	641-101
C5.81	1E12-0111	24" PIPE TO 10" WELDOLET	N/A	NS*	641-101
C5.51	1E12-0112	18" FLANGE TO PIPE	UT	1	641-102
C5.81	1E12-0113	18" PIPE TO 18" X 6" WELDOLET	N/A	NS*	641-102
C5.51	1E12-0114	18" X 6" WELDOLET TO 6" PIPE (<.375" NWT)	N/A	NS	641-102
C5.51	1E12-0115	18" PIPE TO FLANGED VALVE F031A	UT	NS	641-102
C5.51	1E12-0116	18" FLANGED VALVE F031A TO PIPE	UT	NS	641-102
C5.51	1E12-0117	18" PIPE TO VALVE F029A	UT	NS	641-102
C5.51	1E12-0118	18" VALVE F029A TO PIPE	UT	NS	641-102
C5.81	1E12-0119	18" PIPE TO 18" X 8" WELDOLET	N/A	NS*	641-102
C5.51	1E12-0120	18" PIPE TO ELBOW	UT	NS	641-102
C5.51	1E12-0121	18" ELBOW TO PIPE	UT	2	641-102
C5.51	1E12-0122	18" X 8" WELDOLET TO 8" PIPE (<.375" NWT)	N/A	NS	641-104
C5.81	1E12-0123	18" PIPE TO 18" X 8" WELDOLET	N/A	NS*	641-104
C5.51	1E12-0124	18" PIPE TO 18" X 18" X 18" TEE	UT	NS	641-109
C5.51	1E12-0125	18" TEE TO PIPE	UT	NS	641-109
C5.51	1E12-0126	18" X 18" X 18" TEE TO PIPE	UT	NS	641-109
C5.51	1E12-0127	18" PIPE TO ELBOW	UT	NS	641-110
C5.51	1E12-0128	18" ELBOW TO PIPE	UT	NS	641-110
C5.51	1E12-0129	18" PIPE TO VALVE F047A	UT	NS	641-110
C5.51	1E12-0130	18" VALVE F047A TO PIPE	UT	NS	641-110
C5.51	1E12-0131	18" PIPE TO ELBOW	UT	3	641-110
C5.51	1E12-0132	18" ELBOW TO PIPE	UT	NS	641-110
C5.51	1E12-0133	18" PIPE TO ELBOW	UT	NS	641-110
C5.51	1E12-0134	18" ELBOW TO PIPE	UT	NS	641-110
C5.51	1E12-0138	18" PIPE TO ELBOW	UT	NS	641-110
C5.51	1E12-0139	18" ELBOW TO PIPE	UT	NS	641-110
C5.51	1E12-0140	18" PIPE TO 18" X 18" X 10" TEE	UT	NS	641-110
C5.51	1E12-0141	18" X 18" X 10" TEE TO 10" PIPE (<.375" NWT)	N/A	NS	641-110
C5.51	1E12-0141A	10" PIPE TO BLIND FITTING D0506A	N/A	NS	641-110

ITEM NO.	MARK NO.	COMPONENT DESCRIPTION	EXAM METHOD	PERIOD SCHED.	ISI ISO SS-305-
		EXAMINATION CATEGORY: C-F-2			
C5.51	1E12-0142	18″ X 18″ X 10″ TEE TO 18″ PIPE	UT	NS	641-110
C5.51	1E12-0143	18″ PIPE TO 20″ X 18″ REDUCER	UT	NS	641-111
C5.51	1E12-0144	20″ X 18″ REDUCER TO 20″ PIPE	UT	NS	641-111
C5.51	1E12-0145	20″ PIPE TO INLET NOZZLE HEAT EXCHANGER B001A	UT	3	641-111
C5.51	1E12-0146	20″ HEAT EXCHANGER B001A OUTLET NOZZLE TO ELBOW	UT	2	641-113
C5.81	1E12-0147	20″ ELBOW TO 20″ X 6″ ELBOLET	N/A	NS*	641-113
C5.51	1E12-0148	20″ X 6″ ELBOLET TO 6″ PIPE (<.375″ NWT)	N/A	NS	641-113
C5.51	1E12-0149	20″ ELBOW TO PIPE	UT	NS	641-113
C5.51	1E12-0150	20″ PIPE TO 20″ X 18″ REDUCER	UT	NS	641-118
C5.51	1E12-0151	20″ X 18″ REDUCER TO 18″ PIPE	UT	3	641-118
C5.51	1E12-0152	18″ PIPE TO ELBOW	UT	NS	641-118
C5.51	1E12-0153	18″ ELBOW TO PIPE	UT	NS	641-118
C5.51	1E12-0154	18″ PIPE TO ELBOW	UT	NS	641-118
C5.51	1E12-0155	18″ ELBOW TO PIPE	UT	NS	641-118
C5.51	1E12-0156	18″ PIPE TO ELBOW	UT	NS	641-118
C5.51	1E12-0157	18″ ELBOW TO PIPE	UT	NS	641-118
C5.51	1E12-0158	18″ PIPE TO 20″ X 18″ REDUCING ELBOW	UT	NS	641-118
C5.51	1E12-0159	20″ X 18″ REDUCING ELBOW TO PIPE	UT	NS	641-118
C5.51	1E12-0160	20″ PIPE TO HEAT EXCHANGER B001C INLET NOZZLE	UT	3	641-118
C5.51	1E12-0161	18″ FLANGE TO PIPE	UT	1	643-101
C5.81	1E12-0162	18″ PIPE TO 18″ X 6″ WELDOLET	N/A	NS*	643-101
C5.51	1E12-0163	18″ X 6″ WELDOLET TO 6″ PIPE (<.375″ NWT)	N/A	NS	643-107
C5.51	1E12-0164	18″ PIPE TO FLANGED VALVE F031B	UT	NS	643-101
C5.51	1E12-0165	18″ FLANGED VALVE F031B TO PIPE	UT	NS	643-101
C5.51	1E12-0166	18″ PIPE TO VALVE F029B	UT	NS	643-101
C5.51	1E12-0167	18″ VALVE F029B TO PIPE	UT	NS	643-101
C5.81	1E12-0168	18″ PIPE TO 18″ X 8″ WELDOLET	N/A	NS*	643-101
C5.51	1E12-0169	18″ PIPE TO ELBOW	UT	NS	643-101
C5.51	1E12-0170	18″ ELBOW TO PIPE	UT	NS	643-101
C5.51	1E12-0171	18″ PIPE TO 18″ X 18″ X 18″ TEE	UT	NS	643-104
C5.51	1E12-0172	18″ TEE TO PIPE	UT	NS	643-104
C5.51	1E12-0173	18″ PIPE TO ELBOW	UT	NS	643-102
C5.51	1E12-0174	18″ ELBOW TO PIPE	UT	NS	643-102
C5.51	1E12-0175	18″ PIPE TO VALVE F047B	UT	NS	643-102
C5.51	1E12-0176	18″ VALVE F047B TO PIPE	UT	NS	643-102

ITEM NO.	MARK NO.	COMPONENT DESCRIPTION	EXAM METHOD	PERIOD SCHED.	ISI ISO SS-305-
		EXAMINATION CATEGORY: C-F-2			
C5.51	1E12-0177	18" PIPE TO ELBOW	UT	1	643-102
C5.51	1E12-0178	18" ELBOW TO PIPE	UT	NS	643-102
C5.51	1E12-0179	18" PIPE TO ELBOW	UT	NS	643-102
C5.51	1E12-0180	18" ELBOW TO PIPE	UT	NS	643-102
C5.51	1E12-0184	18" PIPE TO ELBOW	UT	NS	643-102
C5.51	1E12-0185	18" ELBOW TO PIPE	UT	NS	643-102
C5.51	1E12-0186	18" PIPE TO 18" X 18" X 10" TEE	UT	NS	643-102
C5.51	1E12-0187	18" X 18" X 10" TEE TO 10" PIPE (<.375" NWT)	N/A	NS	643-102
C5.51	1E12-0187A	10" PIPE TO BLIND FITTING D0506B	N/A	NS	643-102
C5.51	1E12-0188	18" X 18" X 10" TEE TO 18" PIPE	UT	NS	643-102
C5.51	1E12-0189	18" PIPE TO 18" X 20" REDUCER	UT	NS	643-103
C5.51	1E12-0190	18" X 20" REDUCER TO 20" PIPE	UT	NS	643-103
C5.51	1E12-0191	20" PIPE TO HEAT EXCHANGER B001B INLET NOZZLE	UT	NS	643-103
C5.51	1E12-0192	20" HEAT EXCHANGER B0001C OUTLET NOZZLE TO ELBOW	UT	2	643-106
C5.81	1E12-0193	20" ELBOW TO 20" X 6" ELBOLET	N/A	NS*	643-106
C5.51	1E12-0194	20" ELBOW TO PIPE	UT	NS	643-106
C5.51	1E12-0195	20" PIPE TO 20" X 18" REDUCER	UT	NS	643-113
C5.51	1E12-0196	20" X 18" REDUCER TO PIPE	UT	NS	643-113
C5.51	1E12-0197	18" PIPE TO ELBOW	UT	NS	643-113
C5.51	1E12-0198	18" ELBOW TO PIPE	UT	NS	643-113
C5.51	1E12-0199	18" PIPE TO ELBOW	UT	NS	643-113
C5.51	1E12-0200	18" ELBOW TO PIPE	UT	NS	643-113
C5.51	1E12-0201	18" PIPE TO ELBOW	UT	NS	643-113
C5.51	1E12-0202	18" ELBOW TO PIPE	UT	NS	643-113
C5.51	1E12-0203	18" PIPE TO 20" X 18" REDUCING ELBOW	UT	NS	643-113
C5.51	1E12-0204	20" X 18" REDUCING ELBOW TO 20" PIPE	UT	NS	643-113
C5.51	1E12-0205	20" PIPE TO HEAT EXCHANGER B001D INLET NOZZLE	UT	3	643-113
C5.51	1E12-0206	18" FLANGE TO PIPE	UT	2	643-115
C5.81	1E12-0207	18" PIPE TO 18" X 6" WELDOLET	N/A	NS*	643-115
C5.51	1E12-0208	18" PIPE TO FLANGED VALVE F031C	UT	NS	643-115
C5.51	1E12-0209	18" FLANGED VALVE F031C TO PIPE	UT	NS	643-115
C5.51	1E12-0210	18" PIPE TO ELBOW	UT	NS	643-115
C5.51	1E12-0211	18" ELBOW TO PIPE	UT	NS	643-115
C5.81	1E12-0212	18" PIPE TO 18" X 8" WELDOLET	N/A	NS*	643-115
C5.51	1E12-0213	18" PIPE TO ELBOW	UT	NS	643-115
C5.51	1E12-0214	18" ELBOW TO PIPE	UT	NS	643-115

ITEM NO.	MARK NO.	COMPONENT DESCRIPTION	EXAM METHOD	PERIOD SCHED.	ISI ISO SS-305-
		EXAMINATION CATEGORY: C-F-2			
C5.51	1E12-0215	18" PIPE TO VALVE F029C	UT	3	643-117
C5.51	1E12-0216	18" VALVE F029C TO PIPE	UT	NS	643-117
C5.51	1E12-0217	18" PIPE TO ELBOW	UT	2	643-117
C5.51	1E12-0218	18" ELBOW TO PIPE	UT	NS	643-117
C5.51	1E12-0218A	18" PIPE TO FLANGE FE N014C	UT	NS	643-117
C5.51	1E12-0218B	18" FLANGE FE N014C TO PIPE	UT	NS	643-117
C5.51	1E12-0219	18" PIPE TO ELBOW	UT	NS	643-117
C5.51	1E12-0220	18" ELBOW TO PIPE	UT	NS	643-117
C5.51	1E12-0221	18" PIPE TO ELBOW	UT	NS	643-118
C5.51	1E12-0222	18" ELBOW TO PIPE	UT	1	643-118
C5.51	1E12-0223	18" PIPE TO ELBOW	UT	NS	643-118
C5.51	1E12-0224	18" ELBOW TO PIPE	UT	NS	643-118
C5.51	1E12-0225	18" X 8" WELDOLET TO 8" PIPE (<.375" NWT)	N/A	NS	643-115
C5.51	1E12-0226	18" PIPE TO ELBOW (<.375" NWT)	N/A	NS	643-115
C5.51	1E12-0227	18" ELBOW TO PIPE (<.375" NWT)	N/A	NS	643-115
C5.51	1E12-0228	18" PIPE TO VALVE F072C (<.375" NWT)	N/A	NS	643-115
C5.51	1E12-0229	24" X 8" WELDOLET TO 8" PIPE (<.375" NWT)	N/A	NS	642-111
C5.51	1E12-0230	8" PIPE TO ELBOW (<.375" NWT)	N/A	NS	642-111
C5.51	1E12-0231	8" ELBOW TO PIPE (<.375" NWT)	N/A	NS	642-111
C5.51	1E12-0232	8" PIPE TO VALVE F071C (<.375" NWT)	N/A	NS	642-111
C5.51	1E12-0233	24" X 8" WELDOLET TO 8" PIPE (<.375" NWT)	N/A	NS	642-114
C5.51	1E12-0234	8" PIPE TO ELBOW (<.375" NWT)	N/A	NS	642-114
C5.51	1E12-0235	8" ELBOW TO PIPE (<.375" NWT)	N/A	NS	642-114
C5.51	1E12-0236	8" PIPE TO ELBOW (<.375" NWT)	N/A	NS	642-114
C5.51	1E12-0237	8" ELBOW TO PIPE (<.375" NWT)	N/A	NS	642-114
C5.51	1E12-0238	8" PIPE TO VALVE F071B (<.375" NWT)	N/A	NS	642-114
C5.51	1E12-0239	8" PIPE TO VALVE F072B (<.375" NWT)	N/A	NS	643-101
C5.51	1E12-0240	8" X 8" X 8" TEE TO PIPE (<.375" NWT)	N/A	NS	643-101
C5.51	1E12-0241	8" PIPE TO 8" X 8" X 8" TEE (<.375" NWT)	N/A	NS	643-101
C5.51	1E12-0242	8" ELBOW TO PIPE (<.375" NWT)	N/A	NS	643-101
C5.51	1E12-0243	8" PIPE TO ELBOW (<.375" NWT)	N/A	NS	643-101
C5.51	1E12-0244	8" ELBOW TO PIPE (<.375" NWT)	N/A	NS	643-101
C5.51	1E12-0245	8" PIPE TO ELBOW (<.375" NWT)	N/A	NS	643-101
C5.51	1E12-0246	18" X 8" WELDOLET TO 8" PIPE (<.375" NWT)	N/A	NS	643-101
C5.51	1E12-0247	8" TEE TO PIPE (<.375" NWT)	N/A	NS	643-101

ITEM NO.	MARK NO.	COMPONENT DESCRIPTION	EXAM METHOD	PERIOD SCHED.	ISI ISO SS-305-
		EXAMINATION CATEGORY: C-F-2			
C5.51	1E12-0248	8" PIPE TO ELBOW (<.375" NWT)	N/A	NS	643-108
C5.51	1E12-0249	8" ELBOW TO PIPE (<.375" NWT)	N/A	NS	643-108
C5.51	1E12-0250	8" PIPE TO VALVE F504 (<.375" NWT)	N/A	NS	643-108
C5.51	1E12-0251	8" VALVE F504 TO PIPE (<.375" NWT)	N/A	NS	641-114
C5.51	1E12-0252	8" PIPE TO ELBOW (<.375" NWT)	N/A	NS	641-114
C5.51	1E12-0253	8" ELBOW TO PIPE (<.375" NWT)	N/A	NS	641-114
C5.51	1E12-0254	8" PIPE TO ELBOW (<.375" NWT)	N/A	NS	641-114
C5.51	1E12-0255	8" PIPE TO VALVE E12-F040 (<.375" NWT)	N/A	NS	641-115
C5.51	1E12-0256	8" ELBOW TO PIPE (<.375" NWT)	N/A	NS	641-115
C5.51	1E12-0257	8" PIPE TO ELBOW (<.375" NWT)	N/A	NS	641-115
C5.51	1E12-0258	8" ELBOW TO PIPE (<.375" NWT)	N/A	NS	641-114
C5.51	1E12-0259	8" PIPE TO ELBOW (<.375" NWT)	N/A	NS	641-114
C5.51	1E12-0260	8" ELBOW TO PIPE (<.375" NWT)	N/A	NS	641-114
C5.51	1E12-0261	8" PIPE TO ELBOW (<.375" NWT)	N/A	NS	641-114
C5.51	1E12-0262	8" ELBOW TO PIPE (<.375" NWT)	N/A	NS	641-114
C5.51	1E12-0263	8" PIPE TO ELBOW (<.375" NWT)	N/A	NS	641-114
C5.51	1E12-0264	8" TEE TO PIPE (<.375" NWT)	N/A	NS	641-114
C5.51	1E12-0265	8" PIPE TO TEE (<.375" NWT)	N/A	NS	641-114
C5.51	1E12-0266	8" ELBOW TO PIPE (<.375" NWT)	N/A	NS	641-114
C5.51	1E12-0267	8" PIPE TO TEE (<.375" NWT)	N/A	NS	641-114
C5.51	1E12-0268	8" ELBOW TO PIPE (<.375" NWT)	N/A	NS	641-114
C5.51	1E12-0269	8" PIPE TO ELBOW (<.375" NWT)	N/A	NS	641-114
C5.51	1E12-0270	8" ELBOW TO PIPE (<.375" NWT)	N/A	NS	641-116
C5.51	1E12-0271	8" PIPE TO ELBOW (<.375" NWT)	N/A	NS	641-116
C5.51	1E12-0272	8" ELBOW TO PIPE (<.375" NWT)	N/A	NS	641-116
C5.51	1E12-0273	8" PIPE TO ELBOW (<.375" NWT)	N/A	NS	641-116
C5.51	1E12-0274	8" ELBOW TO PIPE (<.375" NWT)	N/A	NS	641-116
C5.51	1E12-0275	8" PIPE TO ELBOW (<.375" NWT)	N/A	NS	641-116
C5.51	1E12-0276	8" ELBOW TO PIPE (<.375" NWT)	N/A	NS	641-116
C5.51	1E12-0277	8" PIPE TO ELBOW (<.375" NWT)	N/A	NS	641-116
C5.51	1E12-0278	8" ELBOW TO PIPE (<.375" NWT)	N/A	NS	641-117
C5.51	1E12-0279	8" PIPE TO ELBOW (<.375" NWT)	N/A	NS	641-117
C5.51	1E12-0280	8" ELBOW TO PIPE (<.375" NWT)	N/A	NS	641-117
C5.51	1E12-0281	8" PIPE TO ELBOW (<.375" NWT)	N/A	NS	641-117
C5.51	1E12-0282	8" ELBOW TO PIPE (<.375" NWT)	N/A	NS	641-117

ITEM NO.	MARK NO.	COMPONENT DESCRIPTION	EXAM METHOD	PERIOD SCHED.	ISI ISO SS-305-
		EXAMINATION CATEGORY: C-F-2			
C5.51	1E12-0283	8" PIPE TO ELBOW (<.375" NWT)	N/A	NS	641-117
C5.51	1E12-0284	8" ELBOW TO PIPE (<.375" NWT)	N/A	NS	641-117
C5.51	1E12-0285	8" PIPE TO ELBOW (<.375" NWT)	N/A	NS	641-117
C5.51	1E12-0286	8" ELBOW TO PIPE (<.375" NWT)	N/A	NS	641-108
C5.51	1E12-0287	8" PIPE TO ELBOW (<.375" NWT)	N/A	NS	641-108
C5.51	1E12-0288	8" ELBOW TO PIPE (<.375" NWT)	N/A	NS	641-108
C5.51	1E12-0289	8" PIPE TO ELBOW (<.375" NWT)	N/A	NS	641-108
C5.51	1E12-0290	8" ELBOW TO PIPE (<.375" NWT)	N/A	NS	641-108
C5.51	1E12-0291	8" PIPE TO ELBOW (<.375" NWT)	N/A	NS	641-108
C5.51	1E12-0292	8" VALVE F049 TO PIPE (<.375" NWT)	N/A	NS	641-108
C5.51	1E12-0293	8" PIPE TO VALVE F049 (<.375" NWT)	N/A	NS	641-104
C5.51	1E12-0294	8" ELBOW TO PIPE (<.375" NWT)	N/A	NS	641-104
C5.51	1E12-0295	8" PIPE TO ELBOW (<.375" NWT)	N/A	NS	641-104
C5.51	1E12-0296	18" X 8" WELDOLET TO 8" PIPE (<.375" NWT)	N/A	NS	641-102
C5.51	1E12-0297	8" PIPE TO ELBOW (<.375" NWT)	N/A	NS	641-102
C5.51	1E12-0298	8" ELBOW TO PIPE (<.375" NWT)	N/A	NS	641-102
C5.51	1E12-0298A	8" PIPE TO PIPE (<.375" NWT)	N/A	NS	641-102
C5.51	1E12-0299	8" PIPE TO ELBOW (<.375" NWT)	N/A	NS	641-102
C5.51	1E12-0300	8" ELBOW TO PIPE (<.375" NWT)	N/A	NS	641-102
C5.51	1E12-0301	8" PIPE TO VALVE F072A (<.375" NWT)	N/A	NS	641-102
C5.51	1E12-0302	8" PIPE TO VALVE F071A (<.375" NWT)	N/A	NS	641-101
C5.51	1E12-0303	8" ELBOW TO PIPE (<.375" NWT)	N/A	NS	641-101
C5.51	1E12-0304	8" PIPE TO ELBOW (<.375" NWT)	N/A	NS	641-101
C5.51	1E12-0305	8" ELBOW TO PIPE (<.375" NWT)	N/A	NS	641-101
C5.51	1E12-0306	8" PIPE TO ELBOW (<.375" NWT)	N/A	NS	641-101
C5.51	1E12-0307	24" X 8" WELDOLET TO 8" PIPE	N/A	NS	641-101
C5.51	1E12-0308	20" HEAT EXCHANGER B001C OUTLET NOZZLE TO PIPE	UT	NS	641-119
C5.81	1E12-0309	20" PIPE TO 20" X 6" WELDOLET	N/A	NS*	641-119
C5.51	1E12-0310	20" PIPE TO 20" X 18" REDUCING ELBOW	UT	NS	641-119
C5.51	1E12-0311	20" X 18" REDUCING ELBOW TO 18" PIPE	UT	NS	641-119
C5.51	1E12-0312	18" PIPE TO VALVE F003A	UT	NS	641-119
C5.51	1E12-0313	18" VALVE F003A TO PIPE	UT	NS	641-119
C5.51	1E12-0314	18" PIPE TO ELBOW	UT	NS	641-119
C5.51	1E12-0315	18" ELBOW TO PIPE	UT	NS	641-119
C5.51	1E12-0316	18" PIPE TO 18" X 18" X 18" TEE	UT	NS	641-106

ITEM NO.	MARK NO.	COMPONENT DESCRIPTION	EXAM METHOD	PERIOD SCHED.	ISI ISO SS-305-
		EXAMINATION CATEGORY: C-F-2			
C5.51	1E12-0317	18″ TEE TO PIPE	UT	NS	641-106
C5.51	1E12-0318	18″ PIPE TO ELBOW	UT	NS	641-106
C5.51	1E12-0319	18″ ELBOW TO PIPE	UT	NS	641-106
C5.51	1E12-0319A	18″ PIPE TO FLANGE FE N014A	UT	NS	641-106
C5.51	1E12-0320	18″ TEE TO PIPE	UT	NS	641-106
C5.51	1E12-0320A	18″ PIPE TO FLANGE	UT	NS	641-106
C5.51	1E12-0321	18″ TEE TO PIPE	UT	NS	641-106
C5.51	1E12-0322	18″ PIPE TO 18″ X 12″ REDUCER	UT	NS	641-106
C5.51	1E12-0323	18″ X 12″ REDUCER TO 12″ PIPE	UT	NS	641-106
C5.51	1E12-0323A	12″ PIPE TO VALVE F0621	UT	NS	641-106
C5.51	1E12-0323B	12″ VALVE F0621 TO 12″ X 10″ REDUCING TEE	UT	NS	641-106
C5.51	1E12-0323D	12″ X 10″ REDUCING TEE TO PIPE	UT	NS	641-106
C5.51	1E12-0324	12″ PIPE TO ELBOW	UT	NS	641-106
C5.51	1E12-0325	12″ ELBOW TO PIPE	UT	NS	641-106
C5.51	1E12-0326	12″ PIPE TO ELBOW	UT	NS	641-106
C5.51	1E12-0327	12″ ELBOW TO PIPE	UT	NS	641-106
C5.51	1E12-0328	12″ PIPE TO ELBOW	UT	NS	641-106
C5.51	1E12-0329	12″ ELBOW TO PIPE	UT	NS	641-106
C5.51	1E12-0330	12″ PIPE TO ELBOW	UT	3	642-119
C5.51	1E12-0331	12″ ELBOW TO PIPE	UT	NS	642-119
C5.51	1E12-0332	12″ PIPE TO VALVE F053A	UT	NS	642-119
C5.51	1E12-0333	12″ VALVE F053A TO PIPE	UT	2	642-119
C5.51	1E12-0334	18″ PIPE TO ELBOW	UT	NS	642-119
C5.51	1E12-0335	12″ ELBOW TO PIPE	UT	NS	642-119
C5.51	1E12-0336	12″ PIPE TO VALVE F050A	UT	NS	642-120
C5.51	1E12-0337	12″ VALVE F050A TO PIPE	UT	1	642-120
C5.51	1E12-0338	12″ PIPE TO 12″ X 14″ REDUCING SLEEVE	UT	1	642-120
C5.81	1E12-0339	12″ PIPE TO 12″ X 6″ SWEEPOLET RWCU INTERTIE	N/A	NS*	642-120
C5.81	1E12-0341	12″ PIPE TO 12″ X 8″ SWEEPOLET	N/A	NS*	642-119
C5.51	1E12-0342	12″ X 8″ SWEEPOLET TO 8″ PIPE (<.375″ NWT)	N/A	NS	642-119
C5.51	1E12-0343	8″ PIPE TO ELBOW (<.375″ NWT)	N/A	NS	642-119
C5.51	1E12-0344	8″ ELBOW TO PIPE (<.375″ NWT)	N/A	NS	642-119
C5.51	1E12-0345	8″ PIPE TO ELBOW (<.375″ NWT)	N/A	NS	642-119
C5.51	1E12-0346	8″ ELBOW TO PIPE (<.375″ NWT)	N/A	NS	642-119
C5.51	1E12-0346A	8″ PIPE TO PIPE (<.375″ NWT)	N/A	NS	642-119
C5.51	1E12-0347	8″ PIPE TO ELBOW (<.375″ NWT)	N/A	NS	642-119
C5.51	1E12-0348	8″ ELBOW TO PIPE (<.375″ NWT)	N/A	NS	642-119
C5.51	1E12-0349	8″ PIPE TO ELBOW (<.375″ NWT)	N/A	NS	642-119

ITEM NO.	MARK NO.	COMPONENT DESCRIPTION	EXAM METHOD	PERIOD SCHED.	ISI ISO SS-305-
		EXAMINATION CATEGORY: C-F-2			
C5.51	1E12-0350	8″ ELBOW TO PIPE (<.375″ NWT)	N/A	NS	642-119
C5.51	1E12-0351	8″ PIPE TO FLANGE VALVE F063A (<.375″ NWT)	N/A	NS	642-119
C5.51	1E12-0352	18″ PIPE TO 18″ X 18″ TEE	UT	NS	641-106
C5.51	1E12-0353	18″ X 18″ X 18″ TEE TO 18″ PIPE	UT	NS	641-106
C5.51	1E12-0354	18″ TEE TO PIPE	UT	NS	641-106
C5.51	1E12-0355	18″ PIPE TO FLANGE RO-D004A	UT	NS	641-106
C5.51	1E12-0356	18″ FLANGE RO-D004A TO PIPE	UT	NS	642-130
C5.51	1E12-0357	18″ PIPE TO ELBOW	UT	NS	642-130
C5.51	1E12-0358	18″ ELBOW TO PIPE	UT	NS	642-130
C5.51	1E12-0359	18″ PIPE TO ELBOW	UT	NS	642-130
C5.51	1E12-0360	18″ ELBOW TO PIPE	UT	NS	642-130
C5.81	1E12-0361	18″ PIPE TO 18″ X 6″ WELDOLET	N/A	NS*	642-130
C5.51	1E12-0362	18″ X 6″ WELDOLET TO 6″ PIPE (<.375″ NWT)	N/A	NS	642-123
C5.51	1E12-0363	6″ PIPE TO ELBOW (<.375″ NWT)	N/A	NS	642-123
C5.51	1E12-0364	6″ ELBOW TO PIPE (<.375″ NWT)	N/A	NS	642-123
C5.51	1E12-0365	6″ PIPE TO FLANGE FE-N012 (<.375″ NWT)	N/A	NS	642-123
C5.51	1E12-0366	6″ FLANGE FE-N012 TO PIPE (<.375″ NWT)	N/A	NS	642-123
C5.51	1E12-0367	6″ PIPE TO ELBOW (<.375″ NWT)	N/A	NS	642-123
C5.51	1E12-0368	6″ ELBOW TO PIPE (<.375″ NWT)	N/A	NS	642-123
C5.51	1E12-0369	6″ PIPE TO 6″ X 6″ X 6″ TEE (<.375″ NWT)	N/A	NS	642-122
C5.51	1E12-0370	6″ X 6″ X 6″ TEE TO PIPE (<.375″ NWT)	N/A	NS	642-122
C5.51	1E12-0371	6″ PIPE TO ELBOW (<.375″ NWT)	N/A	NS	642-122
C5.51	1E12-0372	6″ ELBOW TO PIPE (<.375″ NWT)	N/A	NS	642-122
C5.51	1E12-0373	6″ PIPE TO ELBOW (<.375″ NWT)	N/A	NS	642-122
C5.51	1E12-0374	6″ ELBOW TO PIPE (<.375″ NWT)	N/A	NS	642-122
C5.51	1E12-0375	6″ PIPE TO ELBOW (<.375″ NWT)	N/A	NS	642-122
C5.51	1E12-0376	6″ ELBOW TO PIPE (<.375″ NWT)	N/A	NS	642-122
C5.51	1E12-0377	6″ PIPE TO ELBOW (<.375″ NWT)	N/A	NS	642-122
C5.51	1E12-0378	6″ ELBOW TO PIPE (<.375″ NWT)	N/A	NS	642-122
C5.51	1E12-0379	6″ PIPE TO FLANGED VALVE F086	N/A	NS	642-122
C5.51	1E12-0380	18″ PIPE TO 18″ X 12″ REDUCING ELBOW	UT	2	642-129
C5.51	1E12-0381	18″ X 12″ REDUCING ELBOW TO 12″ PIPE	UT	NS	642-129
C5.51	1E12-0382	12″ PIPE TO VALVE F027A	UT	NS	642-129
C5.51	1E12-0383	12″ VALVE F027A TO PIPE	UT	NS	642-129
C5.51	1E12-0384	12″ PIPE TO ELBOW	UT	NS	642-129

ITEM NO.	MARK NO.	COMPONENT DESCRIPTION	EXAM METHOD	PERIOD SCHED.	ISI ISO SS-305-
		EXAMINATION CATEGORY: C-F-2			
C5.51	1E12-0385	12″ ELBOW TO PIPE	UT	NS	642-129
C5.51	1E12-0386	12″ PIPE TO ELBOW	UT	NS	642-129
C5.51	1E12-0387	12″ ELBOW TO PIPE	UT	NS	642-129
C5.51	1E12-0388	12″ PIPE TO PENETRATION P113 PROCESS PIPE	UT	2	642-129
C5.51	1E12-0389	12″ PENETRATION P113 PROCESS PIPE TO PIPE	UT	3	642-126
C5.51	1E12-0389A	12″ PIPE TO PIPE	UT	NS	642-126
C5.51	1E12-0390	12″ PIPE TO 12″ X 12″ X 12″ TEE	UT	1	642-126
C5.51	1E12-0391	12″ X 12″ X 12″ TEE TO PIPE	UT	NS	642-126
C5.51	1E12-0393A	12″ PIPE TO ELBOW	UT	NS	642-126
C5.51	1E12-0394	12″ ELBOW TO PIPE	UT	NS	642-126
C5.51	1E12-0395	12″ PIPE TO ELBOW	UT	NS	642-126
C5.51	1E12-0396	12″ ELBOW TO PIPE	UT	NS	642-126
C5.51	1E12-0397	12″ PIPE TO VALVE F042A	UT	NS	642-126
C5.51	1E12-0413	12″ X 12″ X 12″ TEE TO 12″ PIPE	UT	NS	642-126
C5.51	1E12-0413A	12″ PIPE TO ELBOW	UT	NS	642-126
C5.51	1E12-0414	12″ ELBOW TO PIPE	UT	NS	642-126
C5.51	1E12-0415	12″ PIPE TO ELBOW	UT	NS	642-126
C5.51	1E12-0416	12″ ELBOW TO PIPE	UT	NS	642-126
C5.51	1E12-0417	12″ PIPE TO 12″ X 12″ X 12″ TEE	UT	1	642-127
C5.51	1E12-0418	12″ X 12″ X 12″ TEE TO 12″ PIPE	UT	NS	642-127
C5.51	1E12-0419	12″ PIPE TO ELBOW	UT	NS	642-128
C5.51	1E12-0420	12″ ELBOW TO PIPE	UT	NS	642-128
C5.51	1E12-0421	12″ PIPE TO VALVE F037A	UT	NS	642-128
C5.51	1E12-0422	12″ TEE TO PIPE	UT	NS	642-127
C5.51	1E12-0423	12″ PIPE TO VALVE F028A	UT	NS	642-127
C5.51	1E12-0435	6″ TEE TO PIPE (<.375″ NWT)	N/A	NS	642-122
C5.51	1E12-0436	6″ PIPE TO VALVE F023 (<.375″ NWT)	N/A	NS	642-122
C5.81	1E12-0443	18″ PIPE TO 18″ X 10″ WELDOLET	N/A	NS*	641-106
C5.51	1E12-0444	18″ X 10″ WELDOLET TO 10″ PIPE (<.375″ NWT)	N/A	NS	641-106
C5.51	1E12-0445	10″ PIPE TO ELBOW (<.375″ NWT)	N/A	NS	641-106
C5.51	1E12-0446	10″ ELBOW TO PIPE (<.375″ NWT)	N/A	NS	641-106
C5.51	1E12-0447	10″ PIPE TO PIPE (<.375″ NWT)	N/A	NS	641-107
C5.51	1E12-0449	10″ PIPE TO ELBOW (<.375″ NWT)	N/A	NS	641-107
C5.51	1E12-0450	10″ ELBOW TO PIPE (<.375″ NWT)	N/A	NS	641-107

ITEM NO.	MARK NO.	COMPONENT DESCRIPTION	EXAM METHOD	PERIOD SCHED.	ISI ISO SS-305-
		EXAMINATION CATEGORY: C-F-2			
C5.51	1E12-0451	10″ PIPE TO VALVE F099A (<.375″ NWT)	N/A	NS	641-107
C5.51	1E12-0452	10″ TEE TO PIPE (<.375″ NWT)	N/A	NS	641-107
C5.51	1E12-0453	10″ PIPE TO VALVE F552A (<.375″ NWT)	N/A	NS	641-107
C5.51	1E12-0454	18″ PIPE TO 18″ X 18″ X 18″ TEE	UT	NS	641-106
C5.51	1E12-0454A	18″ PIPE TO 18″ FLANGE	UT	NS	641-106
C5.51	1E12-0454B	18″ FLANGE TO 18″ PIPE	UT	NS	641-106
C5.51	1E12-0455	18″ ELBOW TO PIPE	UT	3	641-105
C5.51	1E12-0456	18″ PIPE TO ELBOW	UT	NS	641-105
C5.51	1E12-0457	18″ VALVE F024A TO PIPE	UT	NS	641-105
C5.51	1E12-0458	18″ PIPE TO VALVE F024A	UT	2	641-105
C5.51	1E12-0458A	18″ PIPE TO PIPE	UT	NS	641-105
C5.51	1E12-0459	18″ PIPE TO PENETRATION P105	UT	2	641-105
C5.51	1E12-0459A	18″ PIPE TO PIPE	UT	NS	641-105
C5.51	1E12-0460	18″ PENETRATION P105 TO PIPE	UT	NS	642-121
C5.51	1E12-0461	18″ PIPE TO ELBOW	UT	NS	642-121
C5.51	1E12-0462	18″ ELBOW TO FLANGE RO-D003A	UT	NS	642-121
C5.51	1E12-0463	18″ FLANGE RO-D003A TO 18″ X 10″ REDUCER (incl. long-seam)	UT	NS	642-121
C5.51	1E12-0464	18″ X 10″ REDUCER TO 10″ PIPE (<.375″ NWT)(incl long-seam)	N/A	NS	642-121
C5.51	1E12-0465	10″ PIPE TO ELBOW (<.375″ NWT)	N/A	NS	642-121
C5.51	1E12-0466	10″ ELBOW TO PIPE (<.375″ NWT)	N/A	NS	642-121
C5.81	1E12-0467	18″ X 12″ WELDOLET TO 18″ PIPE	N/A	NS*	641-105
C5.51	1E12-0468	12″ X 12″ X 12″ TEE TO 18″ X 12″ WELDOLET	UT	NS	641-105
C5.51	1E12-0469	12″ X 12″ X 12″ TEE TO PIPE	UT	NS	641-105
C5.51	1E12-0470	12″ PIPE TO 12″ X 12″ X 6″ TEE	UT	1	641-105
C5.51	1E12-0471	12″ X 12″ X 6″ TEE TO 12″ FLANGE LPCS INTERTIE	UT	NS	641-105
C5.51	1E12-0472	12″ X 12″ X 6″ TEE TO 6″ ELBOW (<.375″ NWT)	N/A	NS	641-105
C5.51	1E12-0473	6″ ELBOW TO 6″ X 4″ REDUCER (<.375″ NWT)	N/A	NS	641-105
C5.51	1E12-0494	12″ X 6″ REDUCER TO 12″ X 12″ X 12″ TEE (<.375″ NWT)	N/A	NS	641-105
C5.51	1E12-0495	6″ ELBOW TO 12″ X 6″ REDUCER (<.375″ NWT)	N/A	NS	641-105
C5.51	1E12-0496	6″ VALVE F018A TO ELBOW (<.375″ NWT)	N/A	NS	641-105
C5.51	1E12-0497	6″ PIPE TO VALVE F018A (<.375″ NWT)	N/A	NS	641-105
C5.51	1E12-0498	6″ ELBOW TO PIPE (<.375″ NWT)	N/A	NS	641-105

ITEM NO.	MARK NO.	COMPONENT DESCRIPTION	EXAM METHOD	PERIOD SCHED.	ISI ISO SS-305-
		EXAMINATION CATEGORY: C-F-2			
C5.51	1E12-0499	6" PIPE TO ELBOW (<.375" NWT)	N/A	NS	641-105
C5.51	1E12-0500	6" ELBOW TO PIPE (<.375" NWT)	N/A	NS	641-103
C5.51	1E12-0501	6" PIPE TO ELBOW (<.375" NWT)	N/A	NS	641-103
C5.51	1E12-0502	6" ELBOW TO PIPE (<.375" NWT)	N/A	NS	641-103
C5.51	1E12-0503	6" PIPE TO ELBOW (<.375" NWT)	N/A	NS	641-103
C5.51	1E12-0504	6" ELBOW TO PIPE (<.375" NWT)	N/A	NS	641-103
C5.51	1E12-0505	6" PIPE TO ELBOW (<.375" NWT)	N/A	NS	641-103
C5.51	1E12-0506	6" ELBOW TO PIPE (<.375" NWT)	N/A	NS	641-103
C5.51	1E12-0507	6" PIPE TO ELBOW (<.375" NWT)	N/A	NS	641-103
C5.51	1E12-0508	6" ELBOW TO PIPE (<.375" NWT)	N/A	NS	641-103
C5.51	1E12-0509	6" PIPE TO ELBOW (<.375" NWT)	N/A	NS	641-103
C5.51	1E12-0509A	6" FLANGE TO PIPE (<.375" NWT)	N/A	NS	641-103
C5.51	1E12-0510	6" ELBOW TO PIPE (<.375" NWT)	N/A	NS	641-103
C5.51	1E12-0510A	6" PIPE TO FLANGE (<.375" NWT)	N/A	NS	641-103
C5.51	1E12-0511	6" PIPE TO ELBOW (<.375" NWT)	N/A	NS	641-103
C5.51	1E12-0513	6" FLANGE VALVE F046A TO PIPE (<.375" NWT)	N/A	NS	641-103
C5.51	1E12-0514	6" PIPE TO FLANGED VALVE F046A (<.375" NWT)	N/A	NS	641-103
C5.51	1E12-0515	6" FLANGE RO-D001A TO PIPE (<.375" NWT)	N/A	NS	641-103
C5.51	1E12-0516	6" PIPE TO FLANGE RO-D001A (<.375" NWT)	N/A	NS	641-103
C5.51	1E12-0517	6" VALVE F064A TO PIPE (<.375" NWT)	N/A	NS	641-103
C5.51	1E12-0518	6" PIPE TO VALVE F064A (<.375" NWT)	N/A	NS	641-103
C5.51	1E12-0519	6" ELBOW TO PIPE (<.375" NWT)	N/A	NS	641-103
C5.51	1E12-0520	6" PIPE TO ELBOW (<.375" NWT)	N/A	NS	641-103
C5.51	1E12-0521	6" ELBOW TO PIPE (<.375" NWT)	N/A	NS	641-102
C5.51	1E12-0522	6" PIPE TO ELBOW (<.375" NWT)	N/A	NS	641-102
C5.51	1E12-0523	20" X 6" WELDOLET TO 6" PIPE (<.375" NWT)	N/A	NS	641-119
C5.51	1E12-0526	6" PIPE TO ELBOW (<.375" NWT)	N/A	NS	641-119
C5.51	1E12-0527	6" ELBOW TO PIPE (<.375" NWT)	N/A	NS	641-119
C5.51	1E12-0528	6" PIPE TO ELBOW (<.375" NWT)	N/A	NS	641-119
C5.51	1E12-0529	6" ELBOW TO PIPE (<.375" NWT)	N/A	NS	641-119
C5.51	1E12-0530	6" PIPE TO ELBOW (<.375" NWT)	N/A	NS	641-119
C5.51	1E12-0531	6" ELBOW TO PIPE (<.375" NWT)	N/A	NS	641-119
C5.51	1E12-0532	6" PIPE TO VALVE F502C (<.375" NWT)	N/A	NS	641-119
C5.51	1E12-0539	6" PIPE TO VALVE F502A (<.375" NWT)	N/A	NS	641-113
C5.51	1E12-0540	6" ELBOW TO PIPE (<.375" NWT)	N/A	NS	641-113

ITEM NO.	MARK NO.	COMPONENT DESCRIPTION	EXAM METHOD	PERIOD SCHED.	ISI ISO SS-305-
		EXAMINATION CATEGORY: C-F-2			
C5.51	1E12-0541	6" PIPE TO ELBOW (<.375" NWT)	N/A	NS	641-113
C5.51	1E12-0542	6" ELBOW TO PIPE (<.375" NWT)	N/A	NS	641-113
C5.51	1E12-0543	6" PIPE TO ELBOW (<.375" NWT)	N/A	NS	641-113
C5.51	1E12-0544	18" TEE TO PIPE	UT	NS	641-106
C5.51	1E12-0545	18" PIPE TO ELBOW	UT	NS	641-106
C5.51	1E12-0547	18" ELBOW TO VALVE F048A	UT	NS	641-106
C5.51	1E12-0548	18" PIPE TO VALVE F048A	UT	NS	641-109
C5.51	1E12-0549	18" ELBOW TO PIPE	UT	NS	641-109
C5.51	1E12-0550	18" PIPE TO ELBOW	UT	NS	641-109
C5.51	1E12-0551	20" HEAT EXCHANGER B001D OUTLET NOZZLE TO PIPE	UT	NS	643-114
C5.51	1E12-0552	20" PIPE TO 20" X 18" REDUCING ELBOW	UT	NS	643-114
C5.51	1E12-0553	20" X 18" REDUCING ELBOW TO 18" PIPE	UT	NS	643-114
C5.51	1E12-0554	18" PIPE TO VALVE F003B	UT	NS	643-114
C5.51	1E12-0555	18" VALVE F003B TO PIPE	UT	NS	643-114
C5.51	1E12-0556	18" PIPE TO ELBOW	UT	NS	643-114
C5.51	1E12-0557	18" ELBOW TO PIPE	UT	NS	643-114
C5.51	1E12-0558	18" PIPE TO 18" X 18" X 18" TEE	UT	NS	643-105
C5.51	1E12-0559	18" TEE TO PIPE	UT	NS	643-105
C5.51	1E12-0559A	18" PIPE TO ELBOW	UT	NS	643-105
C5.51	1E12-0559B	18" ELBOW TO PIPE	UT	NS	643-105
C5.51	1E12-0559C	18" PIPE TO PIPE	UT	NS	643-105
C5.51	1E12-0559D	18" PIPE TO VALVE P45-F575	UT	1	643-105
C5.51	1E12-0560	18" X 18" X 18" TEE TO PIPE	UT	NS	643-105
C5.51	1E12-0561	18" PIPE TO 18" X 18" X 18" TEE	UT	NS	643-105
C5.51	1E12-0562	18" X 18" X 18" TEE TO PIPE	UT	NS	643-105
C5.51	1E12-0563	18" PIPE TO ELBOW	UT	NS	643-105
C5.51	1E12-0564	18" ELBOW TO PIPE	UT	NS	643-105
C5.51	1E12-0565	18" PIPE TO FLANGE FE-N014B	UT	NS	643-105
C5.51	1E12-0566	18" PIPE TO FLANGE FE-N014B	UT	NS	643-110
C5.51	1E12-0567	18" TEE TO PIPE	UT	NS	643-110
C5.51	1E12-0568	18" X 18" X 18" TEE TO PIPE	UT	NS	643-110
C5.51	1E12-0569	18" PIPE TO 18" X 12" REDUCER	UT	NS	643-110
C5.51	1E12-0570	18" X 12" REDUCER TO 12" PIPE	UT	NS	643-110
C5.51	1E12-0570A	12" PIPE TO PIPE	UT	NS	643-110
C5.51	1E12-0571	12" PIPE TO ELBOW	UT	NS	643-110

ITEM NO.	MARK NO.	COMPONENT DESCRIPTION	EXAM METHOD	PERIOD SCHED.	ISI ISO SS-305-
		EXAMINATION CATEGORY: C-F-2			
C5.51	1E12-0572	12″ ELBOW TO PIPE	UT	NS	643-110
C5.51	1E12-0573	12″ PIPE TO ELBOW	UT	NS	643-110
C5.51	1E12-0574	12″ ELBOW TO PIPE	UT	NS	643-110
C5.51	1E12-0575	12″ PIPE TO ELBOW	UT	NS	643-110
C5.51	1E12-0576	12″ ELBOW TO PIPE	UT	NS	643-110
C5.51	1E12-0577	12″ PIPE TO ELBOW	UT	NS	642-132
C5.51	1E12-0578	12″ ELBOW TO PIPE	UT	NS	642-132
C5.51	1E12-0578A	12″ PIPE TO PIPE	UT	NS	642-132
C5.51	1E12-0579	12″ PIPE TO VALVE F053B	UT	2	642-132
C5.51	1E12-0580	12″ VALVE F053B TO PIPE	UT	3	642-132
C5.51	1E12-0581	12″ PIPE TO ELBOW	UT	NS	642-132
C5.51	1E12-0582	12″ ELBOW TO PIPE	UT	NS	642-132
C5.51	1E12-0583	12″ PIPE TO VALVE F050B	UT	NS	642-131
C5.51	1E12-0584	12″ VALVE F050B TO PIPE	UT	NS	642-131
C5.81	1E12-0585	12″ PIPE TO 12″ X 6″ SWEEPOLET	N/A	NS*	642-131
C5.51	1E12-0586	12″ PIPE TO 12″ X 14″ REDUCING SLEEVE	UT	1	642-131
C5.81	1E12-0588	12″ PIPE TO 12″ X 8″ SWEEPOLET	N/A	NS*	642-132
C5.51	1E12-0589	12″ X 8″ SWEEPOLET TO 8″ PIPE (<.375″ NWT)	N/A	NS	642-132
C5.51	1E12-0590	8″ PIPE TO ELBOW (<.375″ NWT)	N/A	NS	642-132
C5.51	1E12-0591	8″ ELBOW TO PIPE (<.375″ NWT)	N/A	NS	642-132
C5.51	1E12-0592	8″ PIPE TO ELBOW (<.375″ NWT)	N/A	NS	642-132
C5.51	1E12-0593	8″ ELBOW TO PIPE (<.375″ NWT)	N/A	NS	642-132
C5.51	1E12-0594	8″ PIPE TO ELBOW (<.375″ NWT)	N/A	NS	642-132
C5.51	1E12-0595	8″ ELBOW TO PIPE (<.375″ NWT)	N/A	NS	642-132
C5.51	1E12-0596	8″ PIPE TO ELBOW (<.375″ NWT)	N/A	NS	642-132
C5.51	1E12-0597	8″ ELBOW TO PIPE (<.375″ NWT)	N/A	NS	642-132
C5.51	1E12-0598	8″ PIPE TO VALVE F063B (<.375″ NWT)	N/A	NS	642-132
C5.51	1E12-0601	8″ PIPE TO VALVE F063C (<.375″ NWT)	N/A	NS	642-134
C5.51	1E12-0602	8″ ELBOW TO PIPE (<.375″ NWT)	N/A	NS	642-134
C5.51	1E12-0603	8″ PIPE TO ELBOW (<.375″ NWT)	N/A	NS	642-134
C5.51	1E12-0604	8″ ELBOW TO PIPE (<.375″ NWT)	N/A	NS	642-134
C5.51	1E12-0605	8″ PIPE TO ELBOW (<.375″ NWT)	N/A	NS	642-134
C5.51	1E12-0606	8″ ELBOW TO PIPE (<.375″ NWT)	N/A	NS	642-134
C5.51	1E12-0607	8″ PIPE TO ELBOW (<.375″ NWT)	N/A	NS	642-134
C5.51	1E12-0608	8″ ELBOW TO PIPE (<.375″ NWT)	N/A	NS	642-134

ITEM NO.	MARK NO.	COMPONENT DESCRIPTION	EXAM METHOD	PERIOD SCHED.	ISI ISO SS-305-
		EXAMINATION CATEGORY: C-F-2			
C5.51	1E12-0609	8" PIPE TO ELBOW (<.375" NWT)	N/A	NS	642-134
C5.51	1E12-0610	8" ELBOW TO PIPE (<.375" NWT)	N/A	NS	642-134
C5.51	1E12-0611	8" PIPE TO ELBOW (<.375" NWT)	N/A	NS	642-134
C5.51	1E12-0612	12" X 8" WELDOLET TO 8" PIPE (<.375" NWT)	N/A	NS	642-134
C5.51	1E12-0613	18" PIPE TO 18" X 18" X 18" TEE	UT	NS	643-110
C5.81	1E12-0614	18" PIPE TO 18" X 10" WELDOLET	N/A	NS*	643-110
C5.51	1E12-0615	18" X 10" SWEEPOLET TO 10" PIPE (<.375" NWT)	N/A	NS	643-110
C5.51	1E12-0616	10" PIPE TO ELBOW (<.375" NWT)	N/A	NS	643-110
C5.51	1E12-0617	10" ELBOW TO PIPE (<.375" NWT)	N/A	NS	643-110
C5.51	1E12-0619	10" PIPE TO 10" X 10" X 10" TEE (<.375" NWT)	N/A	NS	643-112
C5.51	1E12-0620	10" X 10" X 10" TEE TO PIPE (<.375" NWT)	N/A	NS	643-112
C5.51	1E12-0621	10" PIPE TO ELBOW (<.375" NWT)	N/A	NS	643-112
C5.51	1E12-0622	10" ELBOW TO PIPE (<.375" NWT)	N/A	NS	643-112
C5.51	1E12-0623	10" PIPE TO VALVE F099B (<.375" NWT)	N/A	NS	643-112
C5.51	1E12-0624	10" TEE TO PIPE (<.375" NWT)	N/A	NS	643-112
C5.51	1E12-0624A	10" PIPE TO PIPE (<.375" NWT)	N/A	NS	643-112
C5.51	1E12-0625	10" PIPE TO VALVE F552B (<.375" NWT)	N/A	NS	643-112
C5.51	1E12-0626	18" ELBOW TO PIPE	UT	NS	643-109
C5.51	1E12-0626A	18" PIPE TO ELBOW	UT	1	643-109
C5.51	1E12-0627	18" PIPE TO FLANGE RO-D004B	UT	NS	643-109
C5.51	1E12-0627A	18" X 18" X 18" TEE TO PIPE	UT	NS	643-109
C5.51	1E12-0628	18" X 18" X 18" TEE TO PIPE	UT	NS	643-109
C5.51	1E12-0629	18" PIPE TO 18" X 18" X 18" TEE	UT	NS	643-109
C5.51	1E12-0630	18" ELBOW TO PIPE	UT	NS	643-109
C5.51	1E12-0631	18" PIPE TO ELBOW	UT	NS	643-109
C5.51	1E12-0631A	18" PIPE TO PIPE	UT	NS	643-109
C5.51	1E12-0631B	18" PIPE TO FLANGE	UT	NS	643-109
C5.51	1E12-0631C	18" FLANGE TO PIPE	UT	NS	643-109
C5.51	1E12-0632	18" ELBOW TO PIPE	UT	NS	643-109
C5.51	1E12-0633	18" PIPE TO ELBOW	UT	NS	643-109
C5.51	1E12-0634	18" PIPE TO PIPE	UT	NS	643-109
C5.51	1E12-0635	18" VALVE F024B TO PIPE	UT	NS	643-109
C5.51	1E12-0636	18" PIPE TO VALVE F024B	UT	NS	643-109
C5.51	1E12-0636A	18" PIPE TO PIPE	UT	NS	643-109
C5.51	1E12-0637	18" ELBOW TO PIPE	UT	NS	643-109

ITEM NO.	MARK NO.	COMPONENT DESCRIPTION	EXAM METHOD	PERIOD SCHED.	ISI ISO SS-305-
		EXAMINATION CATEGORY: C-F-2			
C5.51	1E12-0638	18" PIPE TO ELBOW	UT	3	643-109
C5.51	1E12-0638A	18" PIPE TO PIPE	UT	NS	643-109
C5.51	1E12-0639	18" PIPE TO PENETRATION P407 PROCESS PIPE	UT	2	643-109
C5.51	1E12-0640	18" PENETRATION P407 PROCESS PIPE TO PIPE	UT	NS	642-133
C5.51	1E12-0641	18" PIPE TO ELBOW	UT	NS	642-133
C5.51	1E12-0642	18" ELBOW TO FLANGE RO-D003B	UT	1	642-133
C5.51	1E12-0643	18" FLANGE RO-D003B TO 18" X 10" REDUCER (incl. long-seam)	UT	NS	642-133
C5.51	1E12-0644	18" X 10" REDUCER TO 10" PIPE (<.375" NWT)(incl long-seam)	N/A	NS	642-133
C5.51	1E12-0645	10" PIPE TO ELBOW (<.375" NWT)	N/A	NS	642-133
C5.51	1E12-0646	10" ELBOW TO PIPE (<.375" NWT)	N/A	NS	642-133
C5.81	1E12-0648	18" X 6" WELDOLET TO 18" PIPE	N/A	NS*	643-109
C5.51	1E12-0649	6" PIPE TO 18" X 6" WELDOLET (<.375" NWT)	N/A	NS	643-109
C5.51	1E12-0650	6" X 6" X 6" TEE TO PIPE (<.375" NWT)	N/A	NS	643-109
C5.51	1E12-0651	6" TEE TO 6" PIPE (<.375" NWT)	N/A	NS	643-109
C5.51	1E12-0652	6" PIPE TO ELBOW (<.375" NWT)	N/A	NS	643-109
C5.51	1E12-0653	6" ELBOW TO 6" X 4" REDUCER (<.375" NWT)	N/A	NS	643-109
C5.51	1E12-0654	6" PIPE TO 6" X 6" X 6" TEE (<.375" NWT)	N/A	NS	643-109
C5.51	1E12-0655	6" VALVE F018B TO PIPE (<.375" NWT)	N/A	NS	643-109
C5.51	1E12-0656	6" PIPE TO VALVE F018B (<.375" NWT)	N/A	NS	643-109
C5.51	1E12-0657	6" ELBOW TO PIPE (<.375" NWT)	N/A	NS	643-109
C5.51	1E12-0658	6" PIPE TO ELBOW (<.375" NWT)	N/A	NS	643-109
C5.51	1E12-0659	6" ELBOW TO PIPE (<.375" NWT)	N/A	NS	643-111
C5.51	1E12-0660	6" PIPE TO ELBOW (<.375" NWT)	N/A	NS	643-111
C5.51	1E12-0661	6" ELBOW TO PIPE (<.375" NWT)	N/A	NS	643-111
C5.51	1E12-0662	6" PIPE TO ELBOW (<.375" NWT)	N/A	NS	643-111
C5.51	1E12-0663	6" ELBOW TO PIPE (<.375" NWT)	N/A	NS	643-111
C5.51	1E12-0664	6" PIPE TO ELBOW (<.375" NWT)	N/A	NS	643-111
C5.51	1E12-0665	6" ELBOW TO PIPE (<.375" NWT)	N/A	NS	643-111
C5.51	1E12-0666	6" PIPE TO ELBOW (<.375" NWT)	N/A	NS	643-111
C5.51	1E12-0667	6" ELBOW TO PIPE (<.375" NWT)	N/A	NS	643-111
C5.51	1E12-0668	6" PIPE TO ELBOW (<.375" NWT)	N/A	NS	643-111
C5.51	1E12-0668A	6" FLANGE TO PIPE (<.375" NWT)	N/A	NS	643-111

ITEM NO.	MARK NO.	COMPONENT DESCRIPTION	EXAM METHOD	PERIOD SCHED.	ISI ISO SS-305-
		EXAMINATION CATEGORY: C-F-2			
C5.51	1E12-0669	6″ ELBOW TO PIPE (<.375″ NWT)	N/A	NS	643-111
C5.51	1E12-0669A	6″ PIPE TO ELBOW (<.375″ NWT)	N/A	NS	643-111
C5.51	1E12-0669B	6″ PIPE TO FLANGE (<.375″ NWT)	N/A	NS	643-111
C5.51	1E12-0670	6″ FLANGED VALVE F046B TO PIPE (<.375″ NWT)	N/A	NS	643-111
C5.51	1E12-0671	6″ PIPE TO FLANGED VALVE F046B (<.375″ NWT)	N/A	NS	643-111
C5.51	1E12-0672	6″ FLANGE RO-D001B TO PIPE (<.375″ NWT)	N/A	NS	643-111
C5.51	1E12-0673	6″ PIPE TO FLANGE RO-D001B (<.375″ NWT)	N/A	NS	643-111
C5.51	1E12-0674	6″ VALVE F064B TO PIPE (<.375″ NWT)	N/A	NS	643-111
C5.51	1E12-0675	6″ PIPE TO VALVE F064B (<.375″ NWT)	N/A	NS	643-111
C5.51	1E12-0676	6″ ELBOW TO PIPE (<.375″ NWT)	N/A	NS	643-111
C5.51	1E12-0677	6″ PIPE TO ELBOW (<.375″ NWT)	N/A	NS	643-111
C5.51	1E12-0678	6″ ELBOW TO PIPE (<.375″ NWT)	N/A	NS	643-107
C5.51	1E12-0679	6″ PIPE TO ELBOW (<.375″ NWT)	N/A	NS	643-107
C5.51	1E12-0682	18″ FLANGE RO-D004B TO PIPE	UT	NS	643-109
C5.51	1E12-0683	18″ PIPE TO 18″ X 12″ REDUCING ELBOW	UT	NS	642-136
C5.51	1E12-0684	18″ X 12″ REDUCING ELBOW TO PIPE	UT	NS	642-136
C5.51	1E12-0685	12″ PIPE TO VALVE F027B	UT	NS	642-136
C5.51	1E12-0686	12″ VALVE F027B TO PIPE	UT	NS	642-136
C5.51	1E12-0687	12″ PIPE TO ELBOW	UT	NS	642-136
C5.51	1E12-0688	12″ ELBOW TO PIPE	UT	3	642-136
C5.51	1E12-0688A	12″ PIPE TO PIPE	UT	NS	642-136
C5.51	1E12-0689	12″ PIPE TO PENETRATION P412 PROCESS PIPE	UT	NS	642-136
C5.51	1E12-0690	12″ PENETRATION P412 PROCESS PIPE TO PIPE	UT	2	642-137
C5.51	1E12-0691	12″ PIPE TO 12″ X 12″ X 12″ TEE	UT	NS	642-137
C5.51	1E12-0692	12″ X 12″ X 12″ TEE TO PIPE	UT	NS	642-137
C5.51	1E12-0693	12″ PIPE TO VALVE F042B	UT	NS	642-137
C5.51	1E12-0721	12″ TEE TO PIPE	UT	NS	642-137
C5.51	1E12-0722	12″ PIPE TO ELBOW	UT	NS	642-137
C5.51	1E12-0723	12″ ELBOW TO PIPE	UT	NS	642-137
C5.51	1E12-0724	12″ PIPE TO ELBOW	UT	NS	642-137
C5.51	1E12-0725	12″ ELBOW TO PIPE	UT	NS	642-137
C5.51	1E12-0726	12″ PIPE TO ELBOW	UT	NS	642-137
C5.51	1E12-0727	12″ ELBOW TO PIPE	UT	NS	642-137
C5.51	1E12-0728	12″ PIPE TO 12″ X 12″ X 12″ TEE	UT	NS	642-138
C5.51	1E12-0729	12″ X 12″ X 12″ TEE TO ELBOW	UT	NS	642-138

ITEM NO.	MARK NO.	COMPONENT DESCRIPTION	EXAM METHOD	PERIOD SCHED.	ISI ISO SS-305-
		EXAMINATION CATEGORY: C-F-2			
C5.51	1E12-0730	12″ ELBOW TO PIPE	UT	NS	642-138
C5.51	1E12-0731	12″ TEE TO PIPE	UT	NS	642-138
C5.51	1E12-0732	12″ PIPE TO VALVE F037B	UT	NS	642-138
C5.51	1E12-0734	12″ PIPE TO VALVE F028B	UT	NS	642-138
C5.51	1E12-0750	18″ TEE TO PIPE	UT	NS	643-105
C5.51	1E12-0751	18″ PIPE TO ELBOW	UT	NS	643-105
C5.51	1E12-0752	18″ ELBOW TO VALVE F048B	UT	NS	643-105
C5.51	1E12-0754	18″ PIPE TO VALVE F048B	UT	NS	643-104
C5.51	1E12-0755	18″ ELBOW TO PIPE	UT	NS	643-104
C5.51	1E12-0756	18″ PIPE TO ELBOW	UT	2	643-104
C5.51	1E12-0757	18″ X 18″ X 18″ TEE TO PIPE	UT	NS	643-104
C5.81	1E12-0758	20″ PIPE TO 20″ X 6″ WELDOLET	N/A	NS*	643-114
C5.51	1E12-0759	20″ X 6″ WELDOLET TO 6″ PIPE (<.375″ NWT)	N/A	NS	643-114
C5.51	1E12-0762	6″ PIPE TO ELBOW (<.375″ NWT)	N/A	NS	643-114
C5.51	1E12-0763	6″ ELBOW TO PIPE (<.375″ NWT)	N/A	NS	643-114
C5.51	1E12-0764	6″ PIPE TO ELBOW (<.375″ NWT)	N/A	NS	643-114
C5.51	1E12-0765	6″ ELBOW TO PIPE (<.375″ NWT)	N/A	NS	643-114
C5.51	1E12-0766	6″ PIPE TO ELBOW (<.375″ NWT)	N/A	NS	643-114
C5.51	1E12-0767	6″ ELBOW TO PIPE (<.375″ NWT)	N/A	NS	643-114
C5.51	1E12-0768	6″ PIPE TO VALVE F502D (<.375″ NWT)	N/A	NS	643-114
C5.51	1E12-0773	6″ PIPE TO VALVE F502B (<.375″ NWT)	N/A	NS	643-106
C5.51	1E12-0774	6″ ELBOW TO PIPE (<.375″ NWT)	N/A	NS	643-106
C5.51	1E12-0775	6″ PIPE TO ELBOW (<.375″ NWT)	N/A	NS	643-106
C5.51	1E12-0776	6″ ELBOW TO PIPE (<.375″ NWT)	N/A	NS	643-106
C5.51	1E12-0777	6″ PIPE TO ELBOW (<.375″ NWT)	N/A	NS	643-106
C5.51	1E12-0778	20″ X 6″ ELBOLET TO PIPE (<.375″ NWT)	N/A	NS	643-106
C5.51	1E12-0780	8″ PIPE TO FLANGED VALVE F020 (<.375″ NWT)	N/A	NS	642-108
C5.51	1E12-0781	8″ ELBOW TO PIPE (<.375″ NWT)	N/A	NS	642-108
C5.51	1E12-0782	8″ PIPE TO ELBOW (<.375″ NWT)	N/A	NS	642-108
C5.51	1E12-0783	8″ ELBOW TO PIPE (<.375″ NWT)	N/A	NS	642-108
C5.51	1E12-0784	8″ PIPE TO ELBOW (<.375″ NWT)	N/A	NS	642-108
C5.51	1E12-0785	8″ ELBOW TO PIPE (<.375″ NWT)	N/A	NS	642-108
C5.51	1E12-0786	8″ PIPE TO ELBOW (<.375″ NWT)	N/A	NS	642-108
C5.51	1E12-0787	8″ ELBOW TO PIPE (<.375″ NWT)	N/A	NS	642-108
C5.51	1E12-0788	8″ PIPE TO ELBOW (<.375″ NWT)	N/A	NS	642-108

ITEM NO.	MARK NO.	COMPONENT DESCRIPTION	EXAM METHOD	PERIOD SCHED.	ISI ISO SS-305-
		EXAMINATION CATEGORY: C-F-2			
C5.51	1E12-0789	8″ ELBOW TO PIPE (<.375″ NWT)	N/A	NS	642-104
C5.51	1E12-0790	8″ PIPE TO ELBOW (<.375″ NWT)	N/A	NS	642-104
C5.51	1E12-0791	8″ ELBOW TO PIPE (<.375″ NWT)	N/A	NS	642-101
C5.51	1E12-0792	8″ PIPE TO ELBOW (<.375″ NWT)	N/A	NS	642-101
C5.51	1E12-0793	8″ ELBOW TO PIPE (<.375″ NWT)	N/A	NS	642-101
C5.51	1E12-0794	8″ PIPE TO ELBOW (<.375″ NWT)	N/A	NS	642-101
C5.51	1E12-0795	8″ ELBOW TO PIPE (<.375″ NWT)	N/A	NS	642-101
C5.51	1E12-0796	8″ PIPE TO ELBOW (<.375″ NWT)	N/A	NS	642-101
C5.51	1E12-0810	6″ PIPE TO VALVE F018C (<.375″ NWT)	N/A	NS	643-120
C5.51	1E12-0811	6″ ELBOW TO PIPE (<.375″ NWT)	N/A	NS	643-120
C5.51	1E12-0812	6″ PIPE TO ELBOW (<.375″ NWT)	N/A	NS	643-120
C5.51	1E12-0813	6″ ELBOW TO PIPE (<.375″ NWT)	N/A	NS	643-119
C5.51	1E12-0814	6″ PIPE TO ELBOW (<.375″ NWT)	N/A	NS	643-119
C5.51	1E12-0815	6″ PIPE TO PIPE (<.375″ NWT)	N/A	NS	643-116
C5.51	1E12-0816	6″ ELBOW TO PIPE (<.375″ NWT)	N/A	NS	643-116
C5.51	1E12-0817	6″ PIPE TO ELBOW (<.375″ NWT)	N/A	NS	643-116
C5.51	1E12-0818	6″ ELBOW TO PIPE (<.375″ NWT)	N/A	NS	643-116
C5.51	1E12-0819	6″ PIPE TO ELBOW (<.375″ NWT)	N/A	NS	643-116
C5.51	1E12-0820	6″ ELBOW TO PIPE (<.375″ NWT)	N/A	NS	643-116
C5.51	1E12-0821	6″ PIPE TO ELBOW (<.375″ NWT)	N/A	NS	643-116
C5.51	1E12-0822	6″ ELBOW TO PIPE (<.375″ NWT)	N/A	NS	643-116
C5.51	1E12-0823	6″ PIPE TO ELBOW (<.375″ NWT)	N/A	NS	643-116
C5.51	1E12-0823A	6″ FLANGE TO PIPE (<.375″ NWT)	N/A	NS	643-116
C5.51	1E12-0824	6″ ELBOW TO PIPE (<.375″ NWT)	N/A	NS	643-116
C5.51	1E12-0824A	6″ PIPE TO FLANGE (<.375″ NWT)	N/A	NS	643-116
C5.51	1E12-0825	6″ PIPE TO ELBOW (<.375″ NWT)	N/A	NS	643-116
C5.51	1E12-0826	6″ FLANGED VALVE F046C TO PIPE (<.375″ NWT)	N/A	NS	643-116
C5.51	1E12-0827	6″ PIPE TO FLANGED VALVE F046C (<.375″ NWT)	N/A	NS	643-116
C5.51	1E12-0827A	6″ FLANGE R0-D001C TO PIPE (<.375″ NWT)	N/A	NS	643-116
C5.51	1E12-0827B	6″ PIPE TO FLANGE R0-D001C (<.375″ NWT)	N/A	NS	643-116
C5.51	1E12-0828	6″ VALVE F064C TO PIPE (<.375″ NWT)	N/A	NS	643-116
C5.51	1E12-0829	6″ PIPE TO VALVE F064C (<.375″ NWT)	N/A	NS	643-116
C5.51	1E12-0830	6″ ELBOW TO PIPE (<.375″ NWT)	N/A	NS	643-116
C5.51	1E12-0831	6″ PIPE TO ELBOW (<.375″ NWT)	N/A	NS	643-116
C5.51	1E12-0832	6″ ELBOW TO PIPE (<.375″ NWT)	N/A	NS	643-115

ITEM NO.	MARK NO.	COMPONENT DESCRIPTION	EXAM METHOD	PERIOD SCHED.	ISI ISO SS-305-
		EXAMINATION CATEGORY: C-F-2			
C5.51	1E12-0833	6" PIPE TO ELBOW (<.375" NWT)	N/A	NS	643-115
C5.51	1E12-0834	18" X 6" WELDOLET TO 6" PIPE (<.375" NWT)	N/A	NS	643-115
C5.51	1E12-0837	18" VALVE F021 TO 18" PIPE	UT	NS	643-120
C5.51	1E12-0838	18" PIPE TO TEE	UT	NS	643-120
C5.51	1E12-0839	18" PIPE TO 18" X 18" X 18" TEE	UT	3	643-120
C5.51	1E12-0840	18" X 18" X 18" TEE TO PIPE	UT	NS	643-120
C5.51	1E12-0841	18" PIPE TO ELBOW	UT	NS	643-120
C5.51	1E12-0842	18" ELBOW TO PIPE	UT	NS	643-120
C5.51	1E12-0843	18" PIPE TO FLANGE RO-D004C	UT	NS	643-120
C5.51	1E12-0844	18" FLANGE RO-D004C TO PIPE	UT	NS	643-120
C5.51	1E12-0845	18" PIPE TO ELBOW	UT	NS	643-120
C5.51	1E12-0846	18" ELBOW TO PIPE	UT	2	643-120
C5.51	1E12-0847	18" PIPE TO 18" X 12" REDUCING ELBOW	UT	NS	642-134
C5.51	1E12-0848	18" X 12" REDUCING ELBOW TO 12" PIPE	UT	NS	642-134
C5.51	1E12-0849	12" PIPE TO 12" X 8" SWEEPOLET	UT	NS	642-134
C5.51	1E12-0850	12" PIPE TO VALVE F042C	UT	NS	642-134
C5.51	1E12-0896	24" X 10" WELDOLET TO 10" PIPE (<.375" NWT)	N/A	NS	642-114
C5.51	1E12-0897	10" PIPE TO ELBOW (<.375" NWT)	N/A	NS	642-114
C5.51	1E12-0898	10" ELBOW TO PIPE (<.375" NWT)	N/A	NS	642-114
C5.51	1E12-0899	10" PIPE TO ELBOW (<.375" NWT)	N/A	NS	642-114
C5.51	1E12-0900	10" ELBOW TO PIPE (<.375" NWT)	N/A	NS	642-114
C5.51	1E12-0901	10" PIPE TO ELBOW (<.375" NWT)	N/A	NS	642-115
C5.51	1E12-0902	10" ELBOW TO PIPE (<.375" NWT)	N/A	NS	642-115
C5.51	1E12-0903	10" PIPE TO VALVE F066B (<.375" NWT)	N/A	NS	642-115
C5.51	1E12-0905	24" X 10" WELDOLET TO 10" PIPE (<.375" NWT)	N/A	NS	641-101
C5.51	1E12-0906	10" PIPE TO ELBOW (<.375" NWT)	N/A	NS	641-101
C5.51	1E12-0907	10" ELBOW TO PIPE (<.375" NWT)	N/A	NS	641-101
C5.51	1E12-0908	10" PIPE TO ELBOW (<.375" NWT)	N/A	NS	641-101
C5.51	1E12-0909	10" ELBOW TO PIPE (<.375" NWT)	N/A	NS	641-101
C5.51	1E12-0910	10" PIPE TO ELBOW (<.375" NWT)	N/A	NS	642-106
C5.51	1E12-0911	10" ELBOW TO PIPE (<.375" NWT)	N/A	NS	642-106
C5.51	1E12-0912	10" PIPE TO VALVE F066A (<.375" NWT)	N/A	NS	642-106
C5.51	1E12-0914	10" PIPE TO 10" X 10" X 4" TEE RCIC HEAD SPRAY INTERTIE	UT	NS	641-112
C5.51	1E12-0915	10" ELBOW TO PIPE	UT	NS	641-112
C5.51	1E12-0916	10" PIPE TO ELBOW	UT	NS	641-112

ITEM NO.	MARK NO.	COMPONENT DESCRIPTION	EXAM METHOD	PERIOD SCHED.	ISI ISO SS-305-
		EXAMINATION CATEGORY: C-F-2			
C5.51	1E12-0917	10" X 10" X 10" TEE TO PIPE	UT	NS	641-112
C5.51	1E12-0918	10" PIPE TO 10" X 10" X 10" TEE	UT	NS	641-112
C5.51	1E12-0919	10" ELBOW TO PIPE	UT	NS	641-112
C5.51	1E12-0920	10" PIPE TO ELBOW	UT	1	641-112
C5.51	1E12-0921	10" ELBOW TO PIPE	UT	NS	641-112
C5.51	1E12-0922	10" PIPE TO ELBOW	UT	NS	641-112
C5.51	1E12-0922A	10" PIPE TO BLIND FITTING D0505A	UT	NS	641-110
1E12-0923 TO 0940 DELETED IAW DCP 98-0024					
C5.51	1E12-0968	10" X 10" X 10" TEE TO PIPE	UT	3	641-112
C5.51	1E12-0969	10" ELBOW TO PIPE	UT	NS	641-112
C5.51	1E12-0970	10" PIPE TO ELBOW	UT	NS	641-112
C5.51	1E12-0971	10" ELBOW TO PIPE	UT	NS	641-112
C5.51	1E12-0972	10" PIPE TO ELBOW	UT	NS	641-112
C5.51	1E12-0972A	10" PIPE TO BLIND FITTING D0505B	UT	NS	641-112
1E12-0973 TO 0989 DELETED DCP 98-0024					
C5.51	1E12-1014	18" VALVE P45-F575 TO 18" PIPE	UT	NS	643-105
C5.51	1E12-1015	18" PIPE TO VALVE P45-F573	UT	NS	643-105
C5.81	1E12-1016	6" WELDOLET TO 18" PIPE (<.375" NWT)	N/A	NS*	641-105
C5.51	1E12-1017	6" PIPE TO 6" WELDOLET (<.375" NWT)	N/A	NS	641-105
C5.51	1E12-1018	6" ELBOW TO PIPE (<.375" NWT)	N/A	NS	641-105
C5.51	1E12-1019	6" PIPE TO ELBOW (<.375" NWT)	N/A	NS	641-105
C5.51	1E12-1020	6" VALVE F609 TO PIPE (<.375" NWT)	N/A	NS	641-105
C5.51	1E12-1021	6" PIPE TO VALVE F609 (<.375" NWT)	N/A	NS	641-105
C5.51	1E12-1022	6" VALVE F610 TO PIPE (<.375" NWT)	N/A	NS	641-105
C5.51	1E12-1023	6" PIPE TO VALVE F610 (<.375" NWT)	N/A	NS	641-105
C5.51	1E12-1024	6" ELBOW TO PIPE (<.375" NWT)	N/A	NS	641-105
C5.51	1E12-1025	6" PIPE TO ELBOW (<.375" NWT)	N/A	NS	641-105
C5.51	1E12-1026	6" ELBOW TO PIPE (<.375" NWT)	N/A	NS	641-105
C5.51	1E12-1027	6" PIPE TO ELBOW (<.375" NWT)	N/A	NS	641-105
C5.51	1E12-1028	6" ELBOW TO PIPE (<.375" NWT)	N/A	NS	641-105
C5.51	1E12-1029	6" PIPE TO ELBOW (<.375" NWT)	N/A	NS	641-105
C5.51	1E12-1030	6" ELBOW TO PIPE (<.375" NWT)	N/A	NS	641-107

ITEM NO.	MARK NO.	COMPONENT DESCRIPTION	EXAM METHOD	PERIOD SCHED.	ISI ISO SS-305-
		EXAMINATION CATEGORY: C-F-2			
C5.51	1E12-1031	6" PIPE TO ELBOW (<.375" NWT)	N/A	NS	641-107
C5.51	1E12-1032	6" ELBOW TO PIPE (<.375" NWT)	N/A	NS	641-107
C5.51	1E12-1033	6" PIPE TO ELBOW (<.375" NWT)	N/A	NS	641-107
C5.51	1E12-1034	6" ELBOW TO PIPE (<.375" NWT)	N/A	NS	641-107
C5.51	1E12-1035	6" PIPE TO ELBOW (<.375" NWT)	N/A	NS	641-107
C5.51	1E12-1036	10" X 6" REDUCER TO 6" PIPE (<.375" NWT)	N/A	NS	641-107
C5.51	1E12-1037	10" PIPE TO 10" X 6" REDUCER (<.375" NWT)	N/A	NS	641-107
C5.51	1E12-1038	10" VALVE F522A TO PIPE (<.375" NWT)	N/A	NS	641-107
C5.51	1E12-1039	10" VALVE 1G40-F0052 TO PIPE (<.375" NWT)	N/A	NS	246-101
C5.51	1E12-1040	10" PIPE TO ELBOW (<.375" NWT)	N/A	NS	246-101
C5.51	1E12-1041	10" ELBOW TO PIPE (<.375" NWT)	N/A	NS	246-101
C5.51	1E12-1042	10" PIPE TO ELBOW (<.375" NWT)	N/A	NS	246-101
C5.51	1E12-1043	10" ELBOW TO PIPE (<.375" NWT)	N/A	NS	246-101
C5.51	1E12-1044	10" PIPE TO VALVE 1G40-F0053 (<.375" NWT)	N/A	NS	246-101
C5.51	1E12-1045	10" VALVE 1G40-F0053 TO PIPE (<.375" NWT)	N/A	NS	641-106
C5.51	1E12-1046	10" PIPE TO ELBOW (<.375" NWT)	N/A	NS	641-106
C5.51	1E12-1047	10" ELBOW TO 12" X 10" REDUCING TEE (<.375" NWT)	N/A	NS	641-106
C5.51	1E12-1049	18" ELBOW TO 18" X 10" REDUCING TEE	UT	NS	642-105
C5.51	1E12-1050	18" X 10" REDUCING TEE TO 10" PIPE (<.375" NWT)	N/A	NS	642-105
C5.51	1E12-1051	10" PIPE TO ELBOW (<.375" NWT)	N/A	NS	642-105
C5.51	1E12-1052	10" ELBOW TO PIPE (<.375" NWT)	N/A	NS	642-105
C5.51	1E12-1053	10" PIPE TO VALVE 1G40-F0015 (<.375" NWT)	N/A	NS	642-105
C5.51	1E12-1054	10" VALVE 1G40-F0015 TO PIPE (<.375" NWT)	N/A	NS	246-102
C5.51	1E12-1055	10" PIPE TO VALVE 1G40-F0018 (<.375" NWT)	N/A	NS	246-102
C5.51	1E12-1056	18" ELBOW TO 18" X 10" REDUCING TEE	UT	NS	641-106
C5.51	1E21-0031	12" PIPE TO VALVE F005	UT	NS	705-108
C5.81	1E21-0032	12" PIPE TO 6" WELDOLET	N/A	NS*	705-108
C5.51	1E21-0033	14" X 12" REDUCING ELBOW TO 12" PIPE	UT	3	705-108
C5.51	1E21-0034	14" PIPE TO 14" X 12" REDUCING ELBOW	PT	NS	705-108
C5.51	1E21-0035	14" D0002 FLANGE TO PIPE	UT	NS	705-107
C5.51	1E21-0036	14" X 10" REDUCING TEE TO D0002 FLANGE	UT	NS	705-107
C5.51	1E21-0037	14" PIPE TO 14" X 14" X 12" TEE	UT	NS	705-107
C5.51	1E21-0037A	14" X 10" REDUCING TEE TO 14" PIPE	UT	NS	705-107
C5.51	1E21-0038	14" ELBOW TO PIPE	UT	NS	705-106
C5.51	1E21-0039	14" PIPE TO ELBOW	UT	NS	705-106
C5.51	1E21-0040	14" FLANGE FE-N002 TO PIPE	UT	NS	705-105
C5.51	1E21-0041	14" PIPE TO FLANGE FE-N002	UT	NS	705-105
C5.51	1E21-0042	14" ELBOW TO PIPE	UT	NS	705-105
C5.51	1E21-0043	14" PIPE TO ELBOW	UT	2	705-105
C5.51	1E21-0044	14" ELBOW TO PIPE	UT	NS	705-104
C5.51	1E21-0044A	14" PIPE TO 14" X 10" REDUCING TEE	UT	3	705-105

ITEM NO.	MARK NO.	COMPONENT DESCRIPTION	EXAM METHOD	PERIOD SCHED.	ISI ISO SS-305-
		EXAMINATION CATEGORY: C-F-2			
C5.51	1E21-0044B	14″ X 10″ REDUCING TEE TO 14″ PIPE	UT	NS	705-105
C5.51	1E21-0045	14″ PIPE TO ELBOW	UT	NS	705-104
C5.81	1E21-0046	14″ PIPE TO 6″ WELDOLET	N/A	NS*	705-104
C5.51	1E21-0047	14″ FLANGED VALVE TO PIPE	UT	NS	705-104
C5.51	1E21-0048	14″ PIPE TO FLANGED VALVE F003	UT	NS	705-104
C5.81	1E21-0049	14″ PIPE TO 6″ WELDOLET	N/A	NS*	705-104
C5.51	1E21-0050	14″ ELBOW TO PIPE	UT	NS	705-102
C5.51	1E21-0051	14″ PIPE TO ELBOW	UT	NS	705-102
C5.51	1E21-0052	16″ X 14″ REDUCER TO 14″ PIPE	UT	NS	705-102
C5.51	1E21-0053	16″ FLANGE TO 16″ X 14″ REDUCER	UT	3	705-102
C5.51	1E21-0055	24″ PIPE TO FLANGE	UT	1	705-102
C5.51	1E21-0056	24″ ELBOW TO PIPE	UT	NS	705-102
C5.51	1E21-0057	24″ FLANGE TO ELBOW	UT	NS	705-102
C5.51	1E21-0058	24″ PIPE TO FLANGE	UT	NS	705-102
C5.51	1E21-0059	24″ FLANGE TO PIPE	UT	NS	705-102
C5.51	1E21-0060	24″ PIPE TO FLANGE	UT	NS	705-102
C5.51	1E21-0061	24″ X 24″ X 16″ TEE TO 24″ PIPE	UT	NS	705-102
C5.51	1E21-0062	24″ PIPE TO 24″ X 24″ X 16″ TEE	UT	NS	705-102
C5.51	1E21-0063	24″ ELBOW TO PIPE	UT	NS	705-101
C5.51	1E21-0064	24″ PIPE TO ELBOW	UT	NS	705-101
C5.51	1E21-0065	24″ ELBOW TO PIPE	UT	NS	705-101
C5.51	1E21-0066	24″ PIPE TO ELBOW	UT	NS	705-101
C5.81	1E21-0067	24″ PIPE TO 6″ WELDOLET	PT	NS	705-101
C5.51	1E21-0068	24″ ELBOW TO PIPE	UT	NS	705-101
C5.51	1E21-0069	24″ PIPE TO ELBOW	UT	NS	705-101
C5.51	1E21-0070	24″ ELBOW TO PIPE	UT	NS	705-101
C5.51	1E21-0071	24″ VALVE F001 TO ELBOW	UT	NS	705-101
C5.51	1E21-0072	24″ PIPE TO VALVE F001	UT	NS	705-101
C5.51	1E21-0073	24″ PENETRATION P103 PROCESS PIPE TO PIPE	UT	NS	705-101
C5.51	1E21-0075	6″ WELDOLET TO 6″ PIPE (<.375″ NWT)	N/A	NS	705-108
C5.51	1E21-0076	6″ PIPE TO ELBOW (<.375″ NWT)	N/A	NS	705-108
C5.51	1E21-0077	6″ ELBOW TO PIPE (<.375″ NWT)	N/A	NS	705-108
C5.51	1E21-0078	6″ PIPE TO VALVE F025E (<.375″ NWT)	N/A	NS	705-108
C5.51	1E21-0079	14″ X 14″ X 12″ TEE TO 12″ ELBOW	UT	NS	705-107
C5.51	1E21-0080	12″ ELBOW TO VALVE F012	UT	NS	705-107
C5.51	1E21-0081	6″ ELBOW TO 6″ WELDOLET (<.375″ NWT)	N/A	NS	705-104
C5.51	1E21-0082	6″ PIPE TO ELBOW (<.375″ NWT)	N/A	NS	705-104
C5.51	1E21-0083	6″ VALVE TO PIPE (<.375″ NWT)	N/A	NS	705-104
C5.51	1E21-0084	6″ ELBOW TO VALVE F004 (<.375″ NWT)	N/A	NS	705-104
C5.51	1E21-0085	6″ WELDOLET TO 6″ PIPE (<.375″ NWT)	N/A	NS	705-104
C5.51	1E21-0086	24″ X 24″ X 16″ TEE TO 16″ PIPE	UT	2	705-102
C5.51	1E21-0087	16″ PIPE TO ELBOW	UT	NS	705-102

ITEM NO.	MARK NO.	COMPONENT DESCRIPTION	EXAM METHOD	PERIOD SCHED.	ISI ISO SS-305-
		EXAMINATION CATEGORY: C-F-2			
C5.51	1E21-0088	16" ELBOW TO PIPE	UT	NS	705-102
C5.51	1E21-0089	16" PIPE TO PIPE	UT	NS	705-102
C5.51	1E21-0090	16" PIPE TO ELBOW	UT	NS	705-103
C5.51	1E21-0091	16" ELBOW TO PIPE	UT	NS	705-103
C5.51	1E21-0092	16" PIPE TO FLANGE D005	UT	NS	705-103
C5.51	1E21-0093	16" FLANGE D005 TO PIPE	UT	NS	705-103
C5.51	1E21-0094	16" PIPE TO FLANGE D006	UT	NS	705-103
C5.51	1E21-0095	6" WELDOLET TO ELBOW (<.375" NWT)	N/A	NS	705-101
C5.51	1E21-0096	6" ELBOW TO PIPE (<.375" NWT)	N/A	NS	705-101
C5.51	1E21-0097	6" PIPE TO VALVE F008 (<.375" NWT)	N/A	NS	705-101
C5.51	1E21-0098	12" VALVE TO 12" X 12" REDUCING TEE	UT	NS	705-107
C5.51	1E21-0098A	12" X 12" X 6" REDUCING 6" TEE TO 6" X 4" REDUCING ELBOW (<.375" NWT)	N/A	NS	705-107
C5.51	1E21-0099	12" X 12" X 6" REDUCING TEE TO FLANGE	UT	NS	705-107
C5.51	1E21-0100	12" FLANGE TO PIPE	UT	NS	705-107
C5.51	1E21-0101	12" PIPE TO FLANGED VALVE F501	UT	NS	705-107
C5.51	1E21-0102	14" X 10" REDUCING TEE TO 10" PIPE (<.375")	N/A	NS	705-107
C5.51	1E21-0103	10" PIPE TO VALVE 1G40-F0052 (<.375")	N/A	NS	705-107
C5.51	1E21-0104	10" VALVE 1G40-F0018 TO PIPE (<.375")	N/A	NS	705-103
C5.51	1E21-0105	10" PIPE TO ELBOW (<.375")	N/A	NS	705-103
C5.51	1E21-0106	10" ELBOW TO PIPE (<.375")	N/A	NS	705-103
C5.51	1E21-0107	10" PIPE TO ELBOW (<.375")	N/A	NS	705-103
C5.51	1E21-0108	10" ELBOW TO PIPE (<.375")	N/A	NS	705-103
C5.51	1E21-0109	10" PIPE TO 16" X 10" REDUCING TEE (<.375")	N/A	NS	705-103
C5.51	1E21-0110	16" X 10" REDUCING TEE TO 16" PIPE	UT	NS	705-103
C5.51	1E21-0110A	16" PIPE TO 16" X 10" REDUCING TEE	UT	NS	705-103
C5.81	1E21-0111	24" PIPE TO 24" X 10" WELDOLET	N/A	NS*	705-102
C5.51	1E21-0112	24" X 10" WELDOLET TO VALVE 1G40-F0019 (<.375")	N/A	NS	705-102
C5.51	1E21-0114	10" VALVE 1G40-F0019 TO PIPE (<.375")	N/A	NS	246-103
C5.51	1E21-0115	10" PIPE TO VALVE 1G40-F0020 (<.375")	N/A	NS	246-103
C5.51	1E21-0116	10" VALVE 1G40-F0050 TO PIPE (<.375")	N/A	NS	246-103
C5.51	1E21-0117	10" PIPE TO VALVE 1G40-F0051 (<.375")	N/A	NS	246-103
C5.51	1E21-0118	10" VALVE 1G40-F0051 TO PIPE (<.375")	N/A	NS	705-105
C5.51	1E21-0119	10" PIPE TO 14" X 10" REDUCING TEE (<.375")	N/A	NS	705-105
C5.51	1E22-0028	12" VALVE F004 TO ELBOW	UT	NS	701-108
C5.51	1E22-0029	12" ELBOW TO 12" X 16" REDUCER	UT	NS	701-108
C5.51	1E22-0030	12" X 16" REDUCER TO 16" PIPE	UT	NS	701-108
C5.81	1E22-0031	16" PIPE TO 6" SWEEPOLET	PT	NS	701-108
C5.51	1E22-0032	16" PIPE TO ELBOW	UT	NS	701-108
C5.51	1E22-0033	16" ELBOW TO FLANGE RO-D002	UT	NS	701-108
C5.51	1E22-0034	16" FLANGE RO-D002 TO PIPE	UT	NS	701-108
C5.51	1E22-0034A	16" PIPE TO ELBOW	UT	NS	701-107

ITEM NO.	MARK NO.	COMPONENT DESCRIPTION	EXAM METHOD	PERIOD SCHED.	ISI ISO SS-305-
		EXAMINATION CATEGORY: C-F-2			
C5.51	1E22-0035	16″ PIPE TO ELBOW	UT	NS	701-106
C5.51	1E22-0036	16″ ELBOW TO PIPE	UT	NS	701-106
C5.51	1E22-0036A	16″ PIPE TO PIPE	UT	NS	701-106
C5.51	1E22-0037	16″ PIPE TO ELBOW	UT	NS	701-106
C5.51	1E22-0038	16″ ELBOW TO PIPE	UT	NS	701-106
C5.51	1E22-0039	16″ PIPE TO ELBOW	UT	NS	701-106
C5.51	1E22-0040	16″ ELBOW TO PIPE	UT	NS	701-106
C5.51	1E22-0041	16″ PIPE TO 16″ X 16″ X 12″ TEE	UT	NS	701-105
C5.51	1E22-0042	16″ X 16″ X 12″ TEE TO 16″ PIPE	UT	NS	701-105
C5.51	1E22-0043	16″ PIPE TO ELBOW	UT	2	701-105
C5.51	1E22-0044	16″ ELBOW TO PIPE	UT	NS	701-105
C5.51	1E22-0045	16″ PIPE TO FLANGE FE-N007	UT	NS	701-105
C5.51	1E22-0046	16″ PIPE TO FLANGE FE-N007	UT	NS	701-104
C5.81	1E22-0047	16″ PIPE TO 6″ SWEEPOLET	PT	NS	701-104
C5.51	1E22-0048	16″ VALVE F024 TO PIPE	UT	NS	701-104
C5.51	1E22-0049	16″ PIPE TO VALVE F024	UT	NS	701-104
C5.81	1E22-0050	16″ PIPE TO 6″ WELDOLET	N/A	NS*	701-104
C5.51	1E22-0051	16″ ELBOW TO PIPE	UT	NS	701-104
C5.51	1E22-0052	16″ PIPE TO ELBOW	UT	NS	701-104
C5.51	1E22-0053	16″ ELBOW TO PIPE	UT	NS	701-103
C5.51	1E22-0054	16″ PIPE TO ELBOW	UT	NS	701-103
C5.51	1E22-0055	16″ FLANGE TO PIPE	UT	3	701-103
C5.51	1E22-0056	24″ PIPE TO FLANGE	UT	3	701-103
C5.51	1E22-0057	24″ FLANGE D006 TO PIPE	UT	NS	701-103
C5.51	1E22-0058	24″ X 24″ 24″ TEE TO FLANGE D006	UT	NS	701-103
C5.51	1E22-0059	24″ PIPE TO 24″ X 24″ X 24″ TEE	UT	NS	701-103
C5.51	1E22-0059A	24″ PIPE TO PIPE	UT	NS	701-102
C5.51	1E22-0060	24″ ELBOW TO PIPE	UT	NS	701-102
C5.51	1E22-0061	24″ PIPE TO ELBOW	UT	NS	701-102
C5.81	1E22-0062	24″ PIPE TO 6″ WELDOLET	N/A	NS*	701-102
C5.51	1E22-0063	24″ X 24″ X 12″ TEE TO 24″ PIPE	PT	NS	701-102
C5.51	1E22-0064	24″ PIPE TO 24″ X 24″ X 12″ TEE	UT	NS	701-102
C5.51	1E22-0065	24″ ELBOW TO PIPE	UT	NS	701-102
C5.51	1E22-0066	24″ PIPE TO ELBOW	UT	NS	701-102
C5.51	1E22-0067	24″ ELBOW TO PIPE	UT	NS	701-102
C5.51	1E22-0068	24″ PIPE TO ELBOW	UT	NS	701-102
C5.51	1E22-0069	24″ ELBOW TO PIPE	UT	NS	701-102
C5.51	1E22-0070	24″ PIPE TO ELBOW	UT	NS	701-102
C5.51	1E22-0071	24″ ELBOW TO PIPE	UT	NS	701-101
C5.51	1E22-0072	24″ FLANGE TO ELBOW	UT	NS	701-101
C5.51	1E22-0073	24″ PIPE TO FLANGE	UT	NS	701-101
C5.51	1E22-0074	24″ VALVE F015 TO PIPE	UT	NS	701-101

ITEM NO.	MARK NO.	COMPONENT DESCRIPTION	EXAM METHOD	PERIOD SCHED.	ISI ISO SS-305-
		EXAMINATION CATEGORY: C-F-2			
C5.51	1E22-0075	24″ PIPE TO VALVE F015	UT	NS	701-101
C5.51	1E22-0077	24″ ELBOW TO PIPE	UT	NS	701-101
C5.51	1E22-0078	24″ PENETRATION P401 PROCESS PIPE TO ELBOW	UT	1	701-101
C5.51	1E22-0080	16″ X 16″ X 12″ TEE TO 12″ PIPE	UT	NS	701-105
C5.51	1E22-0081	12″ PIPE TO ELBOW	UT	NS	701-105
C5.51	1E22-0082	12″ ELBOW TO PIPE	UT	NS	701-105
C5.51	1E22-0083	12″ PIPE TO ELBOW	UT	NS	701-105
C5.51	1E22-0084	12″ ELBOW TO PIPE	UT	NS	701-105
C5.51	1E22-0085	12″ PIPE TO 12″ X 12″ X 12″ TEE	UT	NS	701-105
C5.51	1E22-0086	12″ X 12″ X 12″ TEE TO 12″ PIPE	UT	NS	701-105
C5.51	1E22-0087	12″ PIPE TO ELBOW	UT	3	701-105
C5.51	1E22-0088	12″ ELBOW TO PIPE	UT	NS	701-105
C5.51	1E22-0088A	12″ PIPE TO PIPE	UT	NS	701-112
C5.51	1E22-0089	12″ PIPE TO ELBOW	UT	NS	701-113
C5.51	1E22-0090	12″ ELBOW TO PIPE	UT	NS	701-113
C5.51	1E22-0091	12″ PIPE TO VALVE F023	UT	NS	701-113
C5.51	1E22-0104	6″ SWEEPOLET TO 6″ PIPE	UT	NS	701-108
C5.51	1E22-0105	6″ PIPE TO ELBOW	UT	2	701-108
C5.51	1E22-0106	6″ ELBOW TO PIPE	UT	NS	701-108
C5.51	1E22-0107	6″ PIPE TO VALVE F003	UT	NS	701-108
C5.51	1E22-0108	6″ PIPE TO 6″ SWEEPOLET	UT	NS	701-104
C5.51	1E22-0109	6″ ELBOW TO PIPE	UT	NS	701-104
C5.51	1E22-0110	6″ PIPE TO ELBOW	UT	NS	701-104
C5.51	1E22-0111	6″ VALVE F026 TO PIPE	UT	NS	701-104
C5.51	1E22-0112	6″ PIPE TO VALVE F026	UT	NS	701-104
C5.51	1E22-0113	6″ ELBOW TO PIPE	UT	NS	701-104
C5.51	1E22-0114	6″ X 6″ X 4″ REDUCING TEE TO ELBOW	UT	NS	701-104
C5.51	1E22-0115	6″ SWEEPOLET TO 6″ X 6″ X 4″ REDUCING TEE	UT	NS	701-104
C5.51	1E22-0116	24″ X 24″ X 24″ TEE TO 24″ X 16″ REDUCER	UT	NS	701-103
C5.51	1E22-0117	24″ X 16″ REDUCER TO 16″ PIPE	UT	NS	701-103
C5.51	1E22-0118	16″ PIPE TO FLANGED VALVE F002	UT	NS	701-103
C5.51	1E22-0119	16″ FLANGED VALVE F002 TO PIPE	UT	NS	701-103
C5.51	1E22-0120	16″ PIPE TO VALVE F001	UT	NS	701-103
C5.51	1E22-0121	16″ WELDOLET TO ELBOW (<.375″ NWT)	N/A	NS	701-102
C5.51	1E22-0122	16″ ELBOW TO PIPE (<.375″ NWT)	N/A	NS	701-102
C5.51	1E22-0123	16″ PIPE TO VALVE F019 (<.375″ NWT)	N/A	NS	701-102
C5.51	1E22-0124	24″ X 24″ X 12″ TEE TO PIPE (<.375″ NWT)	UT	NS	701-102
C5.51	1E22-0124A	12″ PIPE TO ELBOW	UT	NS	701-102
C5.51	1E22-0124B	12″ ELBOW TO FLANGED VALVE G42F010	UT	NS	701-102
C5.51	1E22-0125	12″ X 12″ X 12″ TEE TO 12″ X 10″ REDUCER	UT	NS	701-105
C5.51	1E22-0126	12″ X 10″ REDUCER TO VALVE F010	UT	NS	701-105
C5.51	1E22-0127	6″ VALVE F003 TO 6″ PIPE	UT	NS	701-108

ITEM NO.	MARK NO.	COMPONENT DESCRIPTION	EXAM METHOD	PERIOD SCHED.	ISI ISO SS-305-
		EXAMINATION CATEGORY: C-F-2			
C5.51	1E22-0128	6" PIPE TO VALVE F031	UT	NS	701-108
C5.51	1E22-0131	12" FLANGED VALVE G42F010 TO 12" PIPE	UT	2	701-102
C5.51	1E22-0132	12" VALVE F010 TO 10" PIPE	UT	NS	701-105
C5.51	1E22-0133	10" PIPE TO VALVE F011	UT	NS	701-105
C5.51	1E22-0134	12" PIPE TO FLANGED VALVE G42F020	UT	NS	701-102
C5.51	1E51-0031	6" VALVE F013 TO PIPE	UT	1	631-105
C5.51	1E51-0032	6" PIPE TO ELBOW	UT	NS	631-105
C5.51	1E51-0033	6" ELBOW TO PIPE	UT	NS	631-105
C5.51	1E51-0034	6" PIPE TO ELBOW	UT	2	631-103
C5.51	1E51-0035	6" ELBOW TO PIPE	UT	NS	631-103
C5.51	1E51-0036	6" PIPE TO ELBOW	UT	NS	631-103
C5.51	1E51-0037	6" ELBOW TO PIPE	UT	NS	631-103
C5.51	1E51-0038	6" PIPE TO TEE	UT	NS	631-102
C5.51	1E51-0039	6" TEE TO PIPE	UT	3	631-102
C5.51	1E51-0040	6" TEE TO 6" X 4" REDUCER	UT	NS	631-102
C5.51	1E51-0042	6" PIPE TO FLANGE FE-N001	UT	NS	631-102
C5.51	1E51-0043	6" FLANGE FE-N001 TO PIPE	UT	NS	631-102
C5.51	1E51-0044	6" PIPE TO ELBOW	UT	NS	631-102
C5.51	1E51-0045	6" ELBOW TO PIPE	UT	NS	631-102
C5.51	1E51-0046	6" PIPE TO ELBOW	UT	NS	631-102
C5.51	1E51-0047	6" ELBOW TO PIPE	UT	NS	631-102
C5.51	1E51-0048	6" PIPE TO ELBOW	UT	NS	631-102
C5.51	1E51-0049	6" ELBOW TO PIPE	UT	NS	631-102
C5.51	1E51-0050	6" PIPE TO VALVE F502	UT	NS	631-102
C5.51	1E51-0051	6" VALVE F502 TO FLANGE	UT	NS	631-102
C5.51	1E51-0052	6" FLANGE TO STRAINER D025 (<.375" NWT)	N/A	NS	631-110
C5.51	1E51-0053	6" STRAINER D025 TO FLANGE (<.375" NWT)	N/A	NS	631-110
C5.51	1E51-0054	6" FLANGE TO ELBOW (<.375" NWT)	N/A	NS	631-110
C5.51	1E51-0055	6" ELBOW TO PIPE (<.375" NWT)	N/A	NS	631-110
C5.51	1E51-0056	6" PIPE TO VALVE F501 (<.375" NWT)	N/A	NS	631-110
C5.51	1E51-0057	6" VALVE F501 TO PIPE (<.375" NWT)	N/A	NS	631-110
C5.51	1E51-0058	6" PIPE TO 6" X 6" X 4" TEE (<.375" NWT)	N/A	NS	631-110
C5.51	1E51-0059	6" TEE TO FLANGED VALVE F577 (<.375" NWT)	N/A	NS	631-110
C5.51	1E51-0060	6" TEE TO PIPE (<.375" NWT)	N/A	NS	631-110
C5.51	1E51-0061	6" PIPE TO ELBOW (<.375" NWT)	N/A	NS	631-111
C5.51	1E51-0062	6" ELBOW TO PIPE (<.375" NWT)	N/A	NS	631-111

ITEM NO.	MARK NO.	COMPONENT DESCRIPTION	EXAM METHOD	PERIOD SCHED.	ISI ISO SS-305-
		EXAMINATION CATEGORY: C-F-2			
C5.51	1E51-0062A	6" PIPE TO PIPE (<.375" NWT)	N/A	NS	631-111
C5.51	1E51-0062B	6" PIPE TO PIPE (<.375" NWT)	N/A	NS	631-111
C5.51	1E51-0063	6" PIPE TO ELBOW (<.375" NWT)	N/A	NS	631-111
C5.51	1E51-0064	6" ELBOW TO PIPE (<.375" NWT)	N/A	NS	631-111
C5.51	1E51-0065	6" PIPE TO ELBOW (<.375" NWT)	N/A	NS	631-112
C5.51	1E51-0066	6" ELBOW TO FLANGED VALVE F030 (<.375" NWT)	N/A	NS	631-112
C5.51	1E51-0067	6" FLANGED VALVE F030 TO PIPE (<.375" NWT)	N/A	NS	631-112
C5.51	1E51-0068	6" PIPE TO VALVE F031 (<.375" NWT)	N/A	NS	631-112
C5.51	1E51-0069	6" VALVE F031 TO PIPE (<.375" NWT)	N/A	NS	631-112
C5.51	1E51-0070	6" PIPE TO ELBOW (<.375" NWT)	N/A	NS	631-112
C5.51	1E51-0071	6" ELBOW TO PIPE (<.375" NWT)	N/A	NS	631-112
C5.51	1E51-0072	6" PIPE TO ELBOW (<.375" NWT)	N/A	NS	631-112
C5.51	1E51-0073	6" ELBOW TO PIPE (<.375" NWT)	N/A	NS	631-112
C5.51	1E51-0073A	6" PIPE TO PIPE (<.375" NWT)	N/A	NS	631-112
C5.51	1E51-0074	6" PIPE TO PENETRATION P101 PROCESS PIPE (<.375" NWT)	N/A	NS	631-112
C5.51	1E51-0075	6" PIPE TO FLANGED VALVE F011 (<.375" NWT)	N/A	NS	631-110
C5.51	1E51-0076	6" FLANGED VALVE F011 TO PIPE (<.375" NWT)	N/A	NS	631-110
C5.51	1E51-0077	6" VALVE F010 TO PIPE (<.375" NWT)	N/A	NS	631-110
C5.51	1E51-0078	6" FLANGED VALVE F577 TO 6" X 6" X 4" TEE (<.375" NWT)	N/A	NS	631-110
C5.51	1E51-0079	6" TEE TO PIPE (<.375" NWT)	N/A	NS	631-110
C5.51	1E51-0088	12" PIPE TO VALVE F068	UT	NS	631-101
C5.51	1E51-0089	12" PIPE TO PIPE	UT	NS	631-101
C5.51	1E51-0090	12" ELBOW TO PIPE	UT	NS	631-101
C5.51	1E51-0091	12" FLANGED VALVE F040 TO ELBOW	UT	NS	631-101
C5.51	1E51-0091A	12" PIPE TO FLANGED VALVE F040	UT	NS	631-101
C5.51	1E51-0092	12" ELBOW TO PIPE	UT	NS	632-105
C5.51	1E51-0093	12" PIPE TO ELBOW	UT	NS	632-105
C5.51	1E51-0093A	12" PIPE TO PIPE	UT	NS	632-105
C5.51	1E51-0094	12" ELBOW TO PIPE	UT	NS	632-104
C5.51	1E51-0095	12" PIPE TO ELBOW	UT	NS	632-104
C5.51	1E51-0096	12" PIPE BEND TO PIPE	UT	NS	632-103
C5.51	1E51-0097	8" X 12" X 12" TEE TO 12" PIPE BEND	UT	3	632-103
C5.51	1E51-0097A	8" X 12" X 12" TEE TO 12" PIPE	UT	NS	632-103
C5.51	1E51-0098	12" X 12" X 12" TEE TO PIPE	UT	NS	632-103
C5.51	1E51-0099	12" PIPE TO TEE	UT	2	632-103
C5.51	1E51-0100	12" CAP TO PIPE	UT	NS	632-103

ITEM NO.	MARK NO.	COMPONENT DESCRIPTION	EXAM METHOD	PERIOD SCHED.	ISI ISO SS-305-
		EXAMINATION CATEGORY: C-F-2			
C5.51	1E51-0101	12″ PIPE TO TEE	UT	NS	632-103
C5.51	1E51-0102	8″ X 12″ REDUCING ELBOW TO 12″ PIPE	UT	1	632-103
C5.51	1E51-0103	8″ FLANGE TO 8″ X 12″ REDUCING ELBOW	UT	NS	632-103
C5.51	1E51-0104	12″ X 8″ TEE TO PIPE	UT	NS	632-103
C5.51	1E51-0105	8″ PIPE TO RUPTURE DISC D001	UT	NS	632-103
C5.51	1E51-0106	8″ RUPTURE DISC D001 TO 8″ PIPE	UT	NS	632-103
C5.51	1E51-0107	8″ PIPE TO RUPTURE DISC D002	UT	NS	632-103
C5.51	1E51-0118	10″ PIPE TO TEE	UT	NS	632-102
C5.51	1E51-0119	10″ VALVE F064 TO PIPE	UT	NS	632-102
C5.51	1E51-0130	12″ CAP TO PIPE	UT	NS	632-103
C5.51	1E51-0131	12″ PIPE TO CAP	UT	NS	632-103
C5.51	1G33-0114	6″ VALVE F040 TO PENETRATION P132 PROCESS PIPE	UT	1	672-102
C5.51	1G33-0115	6″ PENETRATION P132 PROCESS PIPE TO VALVE F039	UT	2	672-102
C5.51	1G33-0116	6″ VALVE F039 TO PIPE	UT	NS	672-102
C5.51	1G33-0117	6″ PIPE TO FLANGE FE N040	UT	NS	672-102
C5.51	1G33-0118	6″ FLANGE FE N040 TO PIPE	UT	NS	672-102
C5.51	1G33-0119	6″ PIPE TO ELBOW	UT	NS	672-102
C5.51	1G33-0120	6″ ELBOW TO PIPE	UT	NS	672-102
C5.51	1G33-0121	6″ X 6″ X 6″ TEE TO PIPE	UT	NS	672-101
C5.51	1G33-0122	6″ X 6″ X 6″ TEE TO VALVE F051A	UT	3	672-101
C5.51	1G33-0123	6″ VALVE F051A TO PIPE	UT	NS	672-101
C5.51	1G33-0124	6″ PIPE TO ELBOW	UT	NS	672-101
C5.51	1G33-0125	6″ ELBOW TO PIPE	UT	NS	672-101
C5.51	1G33-0126	6″ PIPE TO VALVE F052A	UT	NS	672-101
C5.51	1G33-0127	6″ VALVE F052A TO PIPE	UT	NS	672-101
C5.51	1G33-0128	6″ PIPE TO ELBOW	UT	NS	672-101
C5.51	1G33-0129	6″ ELBOW TO PIPE	UT	NS	672-101
C5.51	1G33-0130	6″ PIPE TO ELBOW	UT	NS	672-101
C5.51	1G33-0131	6″ ELBOW TO WELDOLET	UT	NS	672-101
C5.51	1G33-0132	6″ PIPE TO TEE	UT	NS	672-101
C5.51	1G33-0132A	6″ PIPE TO PIPE	UT	NS	672-101
C5.51	1G33-0133	6″ VALVE F051B TO PIPE	UT	NS	672-101
C5.51	1G33-0134	6″ ELBOW TO VALVE F051B	UT	NS	672-101
C5.51	1G33-0135	6″ PIPE TO ELBOW	UT	NS	672-101

ITEM NO.	MARK NO.	COMPONENT DESCRIPTION	EXAM METHOD	PERIOD SCHED.	ISI ISO SS-305-
		EXAMINATION CATEGORY: C-F-2			
C5.51	1G33-0136	6″ ELBOW TO PIPE	UT	NS	672-101
C5.51	1G33-0137	6″ PIPE TO ELBOW	UT	NS	672-101
C5.51	1G33-0138	6″ VALVE F052B TO PIPE	UT	NS	672-101
C5.51	1G33-0139	6″ PIPE TO VALVE F052B	UT	NS	672-101
C5.51	1G33-0140	6″ ELBOW TO PIPE	UT	NS	672-101
C5.51	1G33-0141	6″ PIPE TO ELBOW	UT	NS	672-101
C5.51	1G33-0142	6″ ELBOW TO PIPE	UT	NS	672-101
C5.51	1G33-0143	6″ WELDOLET TO ELBOW	UT	NS	672-101
C5.51	1N27-0010	20″ PIPE TO VALVE F032A	UT	NS	082-101
C5.51	1N27-0010A	20″ PIPE TO PIPE	UT	2	082-101
C5.51	1N27-0011	20″ X 20″ X 14″ TEE TO 20″ PIPE	UT	NS	082-101
C5.51	1N27-0011A	20″ X 20″ X 14″ TEE TO 14″ X 12″ REDUCER	UT	NS	082-101
C5.51	1N27-0012	20″ PIPE TO 20″ X 20″ X 14″ TEE	UT	NS	082-101
C5.51	1N27-0013	20″ VALVE F065A TO PIPE	UT	NS	082-101
C5.51	1N27-0024	20″ PIPE TO VALVE F032B	UT	NS	082-104
C5.51	1N27-0024A	20″ PIPE TO PIPE	UT	NS	082-104
C5.51	1N27-0025	20″ X 20″ X 14″ TEE TO 20″ PIPE	UT	3	082-104
C5.51	1N27-0025A	20″ X 20″ X 14″ TEE TO 14″ X 12″ REDUCER	UT	NS	082-104
C5.51	1N27-0026	20″ PIPE TO 20″ X 20″ X 14″ TEE	UT	NS	082-104
C5.51	1N27-0027	20″ VALVE F065B TO PIPE	UT	NS	082-104

* Branch connection welds (C5.81) that were examined prior to incorporation of Code Case N-663 and will not need to be scheduled for examination in the future.

		EXAMINATION CATEGORY: C-G			
C6.10	1E12-C002A-001	DISHED HEAD TO BARREL SHELL #1	MT	SR*	641-120
C6.10	1E12-C002A-002	BARREL SHELL #1 TO BARREL SHELL #2	MT	SR*	641-120
C6.10	1E12-C002A-003	BARREL SHELL #3 TO BARREL FLANGE	MT	SR*	641-120
C6.10	1E12-C002A-004	HEAD FLANGE TO HEAD SHELL	MT	3	641-120
C6.10	1E12-C002A-005	18″ DISCHARGE FLANGE TO 18″ DISCHARGE PIPE	MT	3	641-120
C6.10	1E12-C002A-006	24″ SUCTION FLANGE TO 24″ DISCHARGE PIPE	MT	1	641-120
C6.10	1E12-C002A-007	18″ DISCHARGE PIPE TO HEAD SHELL	MT	2	641-120
C6.10	1E12-C002A-008	24″ SUCTION PIPE TO HEAD SHELL	MT	1	641-120
C6.10	1E12-C002A-009	HEAD SHELL TO HEAD COVER	MT	2	641-120

ITEM NO.	MARK NO.	COMPONENT DESCRIPTION	EXAM METHOD	PERIOD SCHED.	ISI ISO SS-305-
		EXAMINATION CATEGORY: C-G			
C6.10	1E12-C002A-010	HEAD SHELL LONGITUDINAL SEAM	MT	3	641-120
C6.10	1E12-C002A-011	24" SUCTION PIPE LONGITUDINAL SEAM	MT	1	641-120
C6.10	1E12-C002A-012	BARREL SHELL #2 TO BARREL SHELL #3	MT	SR*	641-120
C6.10	1E12-C002A-013	BARREL SHELL #1 LONGITUDINAL SEAM	MT	SR*	641-120
C6.10	1E12-C002A-014	BARREL SHELL #2 LONGITUDINAL SEAM	MT	SR*	641-120
C6.10	1E12-C002A-015	BARREL SHELL #3 LONGITUDINAL SEAM	MT	SR*	641-120
C6.10	1E12-C002B-001	DISHED HEAD TO BARREL SHELL #1	MT	NS	641-123
C6.10	1E12-C002B-002	BARREL SHELL #1 TO BARREL SHELL #2	MT	NS	641-123
C6.10	1E12-C002B-003	BARREL SHELL #3 TO BARREL FLANGE	MT	NS	641-123
C6.10	1E12-C002B-004	HEAD FLANGE TO HEAD SHELL	MT	NS	641-123
C6.10	1E12-C002B-005	18" DISCHARGE FLANGE TO 18" DISCHARGE PIPE	MT	NS	641-123
C6.10	1E12-C002B-006	24" SUCTION FLANGE TO 24" DISCHARGE PIPE	MT	NS	641-123
C6.10	1E12-C002B-007	18" DISCHARGE PIPE TO HEAD SHELL	MT	NS	641-123
C6.10	1E12-C002B-008	24" SUCTION PIPE TO HEAD SHELL	MT	NS	641-123
C6.10	1E12-C002B-009	HEAD SHELL TO HEAD COVER	MT	NS	641-123
C6.10	1E12-C002B-010	HEAD SHELL LONGITUDINAL	MT	NS	641-123
C6.10	1E12-C002B-011	24" SUCTION PIPE LONGITUDINAL SEAM	MT	NS	641-123
C6.10	1E12-C002B-012	BARREL SHELL #2 TO BARREL SHELL #3	MT	NS	641-123
C6.10	1E12-C002B-013	BARREL SHELL #1 LONGITUDINAL SEAM	MT	NS	641-123
C6.10	1E12-C002B-014	BARREL SHELL #2 LONGITUDINAL SEAM	MT	NS	641-123
C6.10	1E12-C002B-015	BARREL SHELL #3 LONGITUDINAL SEAM	MT	NS	641-123
C6.10	1E12-C002C-001	DISHED HEAD TO BARREL SHELL #1	MT	SR*	643-122
C6.10	1E12-C002C-002	BARREL SHELL #1 TO BARREL SHELL #2	MT	SR*	643-122
C6.10	1E12-C002C-003	BARREL SHELL #3 TO BARREL FLANGE	MT	SR*	643-122
C6.10	1E12-C002C-004	HEAD FLANGE TO HEAD SHELL	MT	3	643-122
C6.10	1E12-C002C-005	18" DISCHARGE FLANGE TO 18" DISCHARGE PIPE	MT	1	643-122
C6.10	1E12-C002C-006	24" SUCTION FLANGE TO 24" DISCHARGE PIPE	MT	2	643-122
C6.10	1E12-C002C-007	18" DISCHARGE PIPE TO HEAD SHELL	MT	2	643-122
C6.10	1E12-C002C-008	24" SUCTION PIPE TO HEAD SHELL	MT	2	643-122
C6.10	1E12-C002C-009	HEAD SHELL TO HEAD COVER	MT	3	643-122
C6.10	1E12-C002C-010	HEAD SHELL LONGITUDINAL	MT	3	643-122
C6.10	1E12-C002C-011	24" SUCTION PIPE LONGITUDINAL SEAM	MT	2	643-122
C6.10	1E12-C002C-012	BARREL SHELL #2 TO BARREL SHELL #3	MT	SR*	643-122

ITEM NO.	MARK NO.	COMPONENT DESCRIPTION	EXAM METHOD	PERIOD SCHED.	ISI ISO SS-305-
		EXAMINATION CATEGORY: C-G			
C6.10	1E12-C002C-013	BARREL SHELL #1 LONGITUDINAL SEAM	MT	SR*	643-122
C6.10	1E12-C002C-014	BARREL SHELL #2 LONGITUDINAL SEAM	MT	SR*	643-122
C6.10	1E12-C002C-015	BARREL SHELL #3 LONGITUDINAL SEAM	MT	SR*	643-122
C6.10	1E21-C001-001	DISHED HEAD TO BARREL SHELL #1	MT	SR*	705-113
C6.10	1E21-C001-002	BARREL SHELL #1 TO BARREL SHELL #2	MT	SR*	705-113
C6.10	1E21-C001-003	BARREL SHELL #3 TO BARREL FLANGE	MT	SR*	705-113
C6.10	1E21-C001-004	HEAD FLANGE TO HEAD SHELL	MT	1	705-113
C6.10	1E21-C001-005	16″ DISCHARGE FLANGE TO 16″ DISCHARGE PIPE	MT	2	705-113
C6.10	1E21-C001-006	16″ DISCHARGE PIPE TO HEAD SHELL	MT	2	705-113
C6.10	1E21-C001-007	24″ SUCTION FLANGE TO 24″ SUCTION PIPE	MT	3	705-113
C6.10	1E21-C001-008	24″ SUCTION PIPE TO HEAD SHELL	MT	3	705-113
C6.10	1E21-C001-009	HEAD SHELL TO HEAD COVER	MT	2	705-113
C6.10	1E21-C001-010	HEAD SHELL LONGITUDINAL SEAM	MT	3	705-113
C6.10	1E21-C001-011	24″ SUCTION PIPE LONGITUDINAL SEAM	MT	1	705-113
C6.10	1E21-C001-012	BARREL SHELL #2 TO BARREL SHELL #3	MT	SR*	705-113
C6.10	1E21-C001-013	BARREL SHELL #1 LONGITUDINAL SEAM	MT	SR*	705-113
C6.10	1E21-C001-014	BARREL SHELL #2 LONGITUDINAL SEAM	MT	SR*	705-113
C6.10	1E21-C001-015	BARREL SHELL #3 LONGITUDINAL SEAM	MT	SR*	705-113
C6.10	1E22-C001-001	DISHED HEAD TO BARREL SHELL #1	MT	SR*	701-114
C6.10	1E22-C001-002	BARREL SHELL #1 TO BARREL SHELL #2	MT	SR*	701-114
C6.10	1E22-C001-003	BARREL SHELL #2 TO BARREL SHELL #3	MT	SR*	701-114
C6.10	1E22-C001-004	BARREL SHELL #3 TO SHELL FLANGE	MT	SR*	701-114
C6.10	1E22-C001-005	HEAD FLANGE TO HEAD SHELL	MT	2	701-114
C6.10	1E22-C001-006	16″ DISCHARGE FLANGE TO 16″ DISCHARGE PIPE	MT	1	701-114
C6.10	1E22-C001-007	16″ DISCHARGE PIPE TO HEAD SHELL	MT	1	701-114
C6.10	1E22-C001-008	24″ SUCTION FLANGE TO SUCTION PIPE	MT	3	701-114
C6.10	1E22-C001-009	24″ SUCTION PIPE TO HEAD SHELL	MT	3	701-114
C6.10	1E22-C001-010	HEAD SHELL TO HEAD COVER	MT	3	701-114
C6.10	1E22-C001-011	HEAD SHELL LONGITUDINAL SEAM	MT	2	701-114
C6.10	1E22-C001-012	24″ SUCTION PIPE LONGITUDINAL SEAM	MT	3	701-114
C6.10	1E22-C001-013	BARREL SHELL #1 LONGITUDINAL SEAM	MT	SR*	701-114
C6.10	1E22-C001-014	BARREL SHELL #2 LONGITUDINAL SEAM	MT	SR*	701-114
C6.10	1E22-C001-015	BARREL SHELL #3 LONGITUDINAL SEAM	MT	SR*	701-114

ITEM NO.	MARK NO.	COMPONENT DESCRIPTION	EXAM METHOD	PERIOD SCHED.	ISI ISO SS-305-
		EXAMINATION CATEGORY: C-G			
C6.10	1E22-C001-016	16″ DISCHARGE PIPE LONGITUDINAL SEAM	MT	1	701-114
C6.10	1E51-C001-001	RCIC PUMP CASING TO FLANGE (DISCHARGE)	MT	2	631-109
C6.10	1E51-C001-002	RCIC PUMP CASING TO SUCTION NOZZLE	MT	3	631-109
C6.10	1E51-C001-003	6″ SUCTION NOZZLE TO ELBOW	MT	1	631-109
C6.10	1E51-C001-004	6″ ELBOW TO FLANGE	MT	2	631-109
C6.20	1E22-F003-SEAM	6″ CHECK VALVE BODY WELD	MT	2	701-114
C6.20	1E22-F026-SEAM	6″ GATE VALVE BODY WELD	MT	3	701-114
C6.20	1E51-F502-SEAM	6″ GATE VALVE BODY WELD	MT	3	631-109

* Not scheduled due to inaccessibility (see relief request IR-013), but should access be provided by maintenance or repair the welds shall be examined.

		EXAMINATION CATEGORY: C-H			
C7.10	PR COMPONENTS	SYSTEM LEAKAGE TESTS	VT-2	1,2,3	

4.0 IWD (CLASS 3) EXAMINATIONS

Class 3 examination categories are identifiable by a 'D' as the first assigned letter and are as follows:

Examination Category	Examination Item No.[1] - Area (Examination Method)
D-A	Welded Attachments for Vessels, Piping, Pumps and Valves:
	D1.10 - Vessel Welded Attachments (VT-1)
	D1.20 - Piping Welded Attachments (VT-1)
	D1.30 - Pump Welded Attachments (VT-1)
D-B	Pressure Retaining Components:
	D2.10 - System Leakage Test (VT-2)

NOTES: 1. Only those Code item numbers that are applicable at PNPP.

4.1 Exemptions

The following components are exempted from their respective examination requirements.

1. Integral attachments of supports and restraints to components that are NPS 4 and smaller within the system boundaries of Examination Categories D-A and D-B are exempt from examination.

2. Integral attachments of supports and restraints to components exceeding NPS 4 may be exempted from examination provided:

   a. the components are located in systems (or portions of systems) whose function is not required in support of reactor residual heat removal, containment heat removal, or emergency core cooling; and

   b. the components operate at a pressure of 275 psig or less and at a temperature of 200°F or less.

4.2 Examination Selection Process

For Examination Category D-A, not all of the non-exempt integral attachments are required to be examined.

1. The attachment is on the outside of the pressure retaining component, provides support as defined in NF-1110, and the attachment weld joins the attachment either directly to the surface of the component or to an integrally cast or forged attachment to the component.

2. In case of multiple vessels of similar design and service, the integrally welded attachments of only one of the multiple vessels shall be selected for examination.

3. For piping, pumps and valves, a 10% sample shall be selected for examination. This percentage sample shall be proportional to the total number of non-exempt integrally welded attachments connected to the piping, pumps, and valves located within each system subject to examination.

4. Examination is required whenever component support member deformation (e.g., broken, bent, or pulled out parts) is identified during operation, refueling, maintenance, examination, inservice inspection, or testing.

4.3 Additional Examinations

Examinations performed in accordance with Table IWD-2500-1, except for Examination Category D-A, that reveal flaws or relevant indications exceeding acceptance standards of Table IWD-3000 shall be extended to include additional examinations during the current outage. The additional examinations shall include an additional number of welds, areas, or parts included in the inspection item equal to 20% of the number welds, areas, or parts included in the inspection item that are scheduled to be performed during the interval. The additional examinations shall be selected from welds, areas, or parts of similar material and service. This additional selection may require inclusion of piping systems other than the one containing the flaws or relevant conditions. As an alternative to the above requirements, an engineering evaluation meeting the requirements within Code Case N-586-1 may be used to determine that additional examination scope.

If these additional examinations detect further indications exceeding the acceptance standards of IWD-3000, the examinations shall be further extended to include additional examinations during the current outage. These additional examinations shall include the remaining number of welds, areas, or parts of similar material and service subject to the same type of flaws or relevant conditions

For the inspection period following the period in which the examinations of IWD-2430(a) or (b) were completed, the examinations shall be performed as originally scheduled in accordance with IWD-2400.

If welded attachments are examined as a result of identified component support deformation and the results of these examinations exceed the acceptance standards of Table IWD-3000 additional examinations shall be performed, if necessary, based on the Condition Report evaluation.

4.4 Successive Examinations

The sequence of component examinations which was established in the first inspection interval shall be repeated in the successive inspection intervals, to the extent practical. As allowed by Code Case N-624, the sequence of examinations may be modified in a manner that optimizes scaffolding, radiological, insulation removal, or other considerations provided the Program B percentage requirements are met.

If a component is accepted for continued service in accordance with IWD-3000, the areas containing the flaws or relevant conditions shall be re-examined during the next inspection periods listed in the schedule of the inspection program of IWD-2400.

If reexaminations required by IWD-2420(b) reveal that the flaws or relevant conditions remain essentially unchanged for three successive inspection periods, the component examination schedule may revert to the original schedule of successive inspections.

If welded attachments are examined as a result of identified component support deformation, and the results of these examinations exceed the acceptance standards of Table IWD-3000, successive examinations shall be performed, if determined necessary, based on the Condition Report evaluation.

4.5 Relief Requests

When compliance to Code examination requirements is not achievable, relief from examinations is requested. Inservice Relief Requests (IR), which are required to be filed with the NRC for components subject to the examination requirements of ASME Section XI, Article IWD are:

IR No./Rev	Submittal Letter	NRC Safety Eval
IR-027, R-2	L-10-246	SE to follow review/approval

The relief requests that are submitted to the NRC for approval are processed through Fleet Licensing and become docketed correspondence. Additionally, copies are captured in the ISI Program Notebook. The copy of the request exhibited on the following pages are for information only.

Perry Nuclear Power Plant Unit 1
RELIEF REQUEST #IR-027, Rev. 2

1. ASME Code Component(s) Affected

ASME Code Class 3 Pressure Vessels Welded Attachment (1) in the Standby Diesel Generator Fuel Oil System (R45), Category D-A, Item D1.10.

ITEM NO.	COMPONENT I.D.	SYS./ISI ISO	DESCRIPTION
D1.10	1R45-A003A-WA	STANDBY & HPCS DIESEL FUEL OIL SS-305-355-110	INTEGRALLY ATTACHED ANCHOR OF DIV 1 DIESEL FUEL OIL DAY TANK

2. Applicable Code Edition and Addenda

The applicable ASME B&PV Section XI code of record for Perry NPP for the 3rd 10-Year Inservice Inspection Interval is the 2001 Edition through the 2003 Addenda as modified by 10CFR50.55a.

3. Applicable Code Requirement

Table IWD-2500-1, Category D-A, Item No. D1.10 requires visual examination (VT-1) of 100% of the required areas of each welded attachment. Note 3 of Table IWD-2500-1, Category D-A states "For multiple vessels of similar design, function, and service, the welded attachments of only one of the multiple vessels shall be selected for examination."

4. Reason for Request

Pursuant to 10 CFR 50.55a(a)(3)(ii), relief is requested from performing visual examination (VT-1) of the subject welded attachment due to access limitations due to the fire retardant coating (Pyrocrete) on the welded attachment. The relief is requested for Perry's third 10-year inspection interval.

5. Proposed Alternative and Basis for Use

At the time of the scheduled ASME Code Section XI, Category F-A visual examinations of the day tank anchor, the Pyrocrete covering the integral attachment will be examined for any condition which might indicate that their integral attachments are structurally degraded (i.e., severely cracked or missing Pyrocrete, support detached from component, etc.). First and Second interval examinations produced acceptable results with no visible signs of structural degradation.

The integrally attached (welded) anchor on the fuel oil day tank is buried in fire retardant Pyrocrete in order to meet the PNPP Fire Protection Program requirements per 10CFR50 Appendix R, and Branch Technical position APCSB 9.5-1, Appendix A (see PNPP USAR Appendix 9A, Section 90A.5(D)(2)(1)). Pyrocrete is a hard, rigid material. When applied, it is considered as a permanent feature of the system to endure through the life span of the facility. To remove this material from the day tanks would require cutting and chipping.

The structural integrity of the pressure boundary was demonstrated during construction, prior to application of Pyrocrete by meeting the requirements of the ASME Code Section III. All welds were inspected in accordance with the appropriate Code requirements. Weld techniques and welders were qualified in accordance with Code requirements and materials were purchased and traced in accordance with he appropriate Code and NRC requirements and guidelines.

In summary, because of acceptable initial condition, the capability to visually examine the pyrocrete for indications of degradation of the underlying attachment welds, and the previous approval of the same relief it is concluded that the specified requirements would result in hardship or unusual difficulty without a compensating increase in the level of quality or safety.

6. Duration of Proposed Alternative

This alternative is being requested for the 3rd 10-year ISI Interval, which will expire May 17, 2019.

7. Precedent

The NRC (reference TAC No. MA3437, dated 11/22/99) approved revision 1 of this relief request, which requested similar relief for the subject welds for Perry's second 10-year inspection interval.

4.6 Inservice Examination Table

This section contains the listing of all Class 3 components subject to the examination requirements of ASME Section XI, Article IWD. This listing is for reference purposes only. The actual components scheduled for examinations are presented to management for approval at least 60 days prior to commencing a scheduled refueling outage.

The information presented in the tables are defined below:

1. EXAMINATION CATEGORY - The basis for organizing components subject to examination.

2. ITEM NO. - A division within an examination category which separates the specific examination requirements.

3. MARK NO. - A unique identification number assigned to each weld or component.

4. COMPONENT DESCRIPTION - A brief description used to identify the weld or component.

5. EXAM METHOD - This abbreviation identifies the unique non-destructive examination method(s) required for the weld or component. The abbreviations used in this listing are as follows:

   VT-1 - Visual Examination for Surface Conditions
   VT-2 - Visual Examination for Leakage

6. PERIOD SCHED. - This column identifies the inspection period which the weld or component is tentatively scheduled to receive examination. Normally there will be 2 refueling outages within each period. Scheduled examinations can be completed in either of the refueling outages as appropriate to facilitate other outage activities, but must be completed by the end of the period. The period scheduled can be either 1, 2, 3, or any combination of these numbers. For those welds or components not scheduled for examination, the letters "NS" will be inserted in place of an inspection period. An asterisk(s) in the schedule column denotes a scheduling peculiarity that will be explained at the end of the applicable category.

ITEM NO.	MARK NO.	COMPONENT DESCRIPTION	EXAM METHOD	PERIOD SCHED.	ISI ISO SS-305-
		EXAMINATION CATEGORY: D-A			
D1.20	1B21-B0101A-WA	INTEGRAL ATTACHMENT RIGID STRUT	VT-1	NS	605-128
D1.20	1B21-B0101B-WA	INTEGRAL ATTACHMENT RIGID STRUT	VT-1	1	605-112
D1.20	1B21-B0101C-WA	INTEGRAL ATTACHMENT RIGID STRUT	VT-1	NS	605-122
D1.20	1B21-B0101D-WA	INTEGRAL ATTACHMENT RIGID STRUT	VT-1	NS	605-116
D1.20	1B21-B0102B-WA	INTEGRAL ATTACHMENT RIGID STRUT	VT-1	NS	605-120
D1.20	1B21-B0102C-WA	INTEGRAL ATTACHMENT RIGID STRUT	VT-1	NS	605-127
D1.20	1B21-B0103B-WA	INTEGRAL ATTACHMENT RIGID STRUT	VT-1	NS	605-121
D1.20	1B21-B0103C-WA	INTEGRAL ATTACHMENT RIGID STRUT	VT-1	NS	605-125
D1.20	1B21-H0001-WA	INTEGRAL ATTACHMENT ANCHOR	VT-1	NS	605-128
D1.20	1B21-H0006-WA	INTEGRAL ATTACHMENT MECHANICAL SNUBBER	VT-1	NS	605-128
D1.20	1B21-H0007-WA	INTEGRAL ATTACHMENT MECHANICAL SNUBBER	VT-1	NS	605-128
D1.20	1B21-H0010-WA	INTEGRAL ATTACHMENT MECHANICAL SNUBBER	VT-1	NS	605-127
D1.20	1B21-H0011-WA	INTEGRAL ATTACHMENT ANCHOR	VT-1	NS	605-127
D1.20	1B21-H0013-WA	INTEGRAL ATTACHMENT MECHANICAL SNUBBER	VT-1	NS	605-127
D1.20	1B21-H0016-WA	INTEGRAL ATTACHMENT ANCHOR	VT-1	NS	605-125
D1.20	1B21-H0020-WA	INTEGRAL ATTACHMENT MECHANICAL SNUBBER	VT-1	2	605-125
D1.20	1B21-H0021-WA	INTEGRAL ATTACHMENT MECHANICAL SNUBBER	VT-1	NS	605-125
D1.20	1B21-H0023-WA	INTEGRAL ATTACHMENT MECHANICAL SNUBBER	VT-1	NS	605-125
D1.20	1B21-H0025-WA	INTEGRAL ATTACHMENT MECHANICAL SNUBBER	VT-1	NS	605-113
D1.20	1B21-H0026-WA	INTEGRAL ATTACHMENT ANCHOR	VT-1	NS	605-121
D1.20	1B21-H0029-WA	INTEGRAL ATTACHMENT MECHANICAL SNUBBER	VT-1	NS	605-121
D1.20	1B21-H0031-WA	INTEGRAL ATTACHMENT MECHANICAL SNUBBER	VT-1	NS	605-121
D1.20	1B21-H0035-WA	INTEGRAL ATTACHMENT ANCHOR	VT-1	NS	605-120
D1.20	1B21-H0042-WA	INTEGRAL ATTACHMENT MECHANICAL SNUBBER	VT-1	1	605-120
D1.20	1B21-H0044-WA	INTEGRAL ATTACHMENT ANCHOR	VT-1	NS	605-115
D1.20	1B21-H0045-WA	INTEGRAL ATTACHMENT MECHANICAL SNUBBER	VT-1	NS	605-115
D1.20	1B21-H0047-WA	INTEGRAL ATTACHMENT MECHANICAL SNUBBER	VT-1	NS	605-115
D1.20	1B21-H0049-WA	INTEGRAL ATTACHMENT MECHANICAL SNUBBER	VT-1	2	605-115
D1.20	1B21-H0050-WA	INTEGRAL ATTACHMENT RIGID GUIDE	VT-1	NS*	605-115
D1.20	1B21-H0052-WA	INTEGRAL ATTACHMENT ANCHOR	VT-1	NS	605-130
D1.20	1B21-H0053-WA	INTEGRAL ATTACHMENT VARIABLE SPRING	VT-1	3	605-130
D1.20	1B21-H0054-WA	INTEGRAL ATTACHMENT MECHANICAL SNUBBER	VT-1	NS	605-130
D1.20	1B21-H0056-WA	INTEGRAL ATTACHMENT MECHANICAL SNUBBER	VT-1	NS	605-130
D1.20	1B21-H0057-WA	INTEGRAL ATTACHMENT MECHANICAL SNUBBER	VT-1	NS	605-130
D1.20	1B21-H0061-WA	INTEGRAL ATTACHMENT ANCHOR	VT-1	NS	605-117
D1.20	1B21-H0063-WA	INTEGRAL ATTACHMENT MECHANICAL SNUBBER	VT-1	NS	605-117
D1.20	1B21-H0065-WA	INTEGRAL ATTACHMENT MECHANICAL SNUBBER	VT-1	NS	605-117
D1.20	1B21-H0069-WA	INTEGRAL ATTACHMENT MECHANICAL SNUBBER	VT-1	NS	605-113
D1.20	1B21-H0070-WA	INTEGRAL ATTACHMENT ANCHOR	VT-1	NS	605-116
D1.20	1B21-H0073-WA	INTEGRAL ATTACHMENT MECHANICAL SNUBBER	VT-1	NS	605-116
D1.20	1B21-H0074-WA	INTEGRAL ATTACHMENT MECHANICAL SNUBBER	VT-1	3	605-116

EXAMINATION CATEGORY: D-A

ITEM NO.	MARK NO.	COMPONENT DESCRIPTION	EXAM METHOD	PERIOD SCHED.	ISI ISO SS-305-
D1.20	1B21-H0079-WA	INTEGRAL ATTACHMENT MECHANICAL SNUBBER	VT-1	NS	605-116
D1.20	1B21-H0080-WA	INTEGRAL ATTACHMENT ANCHOR	VT-1	NS	605-118
D1.20	1B21-H0084-WA	INTEGRAL ATTACHMENT MECHANICAL SNUBBER	VT-1	NS	605-118
D1.20	1B21-H0086-WA	INTEGRAL ATTACHMENT MECHANICAL SNUBBER	VT-1	NS	605-118
D1.20	1B21-H0087-WA	INTEGRAL ATTACHMENT MECHANICAL SNUBBER	VT-1	NS	605-113
D1.20	1B21-H0088-WA	INTEGRAL ATTACHMENT ANCHOR	VT-1	NS	605-114
D1.20	1B21-H0090-WA	INTEGRAL ATTACHMENT ANCHOR	VT-1	NS	605-113
D1.30	1B21-H0092-WA	INTEGRAL ATTACHMENT MECHANICAL SNUBBER	VT-1	NS	605-114
D1.20	1B21-H0095-WA	INTEGRAL ATTACHMENT MECHANICAL SNUBBER	VT-1	NS	605-114
D1.20	1B21-H0097-WA	INTEGRAL ATTACHMENT ANCHOR	VT-1	NS	605-123
D1.20	1B21-H0098-WA	INTEGRAL ATTACHMENT MECHANICAL SNUBBER	VT-1	NS	605-123
D1.20	1B21-H0105-WA	INTEGRAL ATTACHMENT ANCHOR	VT-1	NS	605-124
D1.20	1B21-H0106-WA	INTEGRAL ATTACHMENT MECHANICAL SNUBBER	VT-1	NS	605-123
D1.20	1B21-H0107-WA	INTEGRAL ATTACHMENT MECHANICAL SNUBBER	VT-1	1	605-123
D1.20	1B21-H0109-WA	INTEGRAL ATTACHMENT ANCHOR	VT-1	NS	605-122
D1.20	1B21-H0115-WA	INTEGRAL ATTACHMENT MECHANICAL SNUBBER	VT-1	NS	605-122
D1.20	1B21-H0116-WA	INTEGRAL ATTACHMENT VARIABLE SPRING	VT-1	NS	605-122
D1.20	1B21-H0117-WA	INTEGRAL ATTACHMENT MECHANICAL SNUBBER	VT-1	NS	605-122
D1.20	1B21-H0119-WA	INTEGRAL ATTACHMENT MECHANICAL SNUBBER	VT-1	3	605-122
D1.20	1B21-H0120-WA	INTEGRAL ATTACHMENT RIGID GUIDE	VT-1	NS*	605-114
D1.20	1B21-H0121-WA	INTEGRAL ATTACHMENT ANCHOR	VT-1	2	605-129
D1.20	1B21-H0122-WA	INTEGRAL ATTACHMENT MECHANICAL SNUBBER	VT-1	NS	605-129
D1.20	1B21-H0125-WA	INTEGRAL ATTACHMENT MECHANICAL SNUBBER	VT-1	NS	605-129
D1.20	1B21-H0127-WA	INTEGRAL ATTACHMENT MECHANICAL SNUBBER	VT-1	NS	605-129
D1.20	1B21-H0128-WA	INTEGRAL ATTACHMENT RIGID GUIDE	VT-1	NS*	605-129
D1.20	1B21-H0129-WA	INTEGRAL ATTACHMENT MECHANICAL SNUBBER	VT-1	NS	605-119
D1.20	1B21-H0132-WA	INTEGRAL ATTACHMENT VARIABLE SPRING	VT-1	NS	605-124
D1.20	1B21-H0133-WA	INTEGRAL ATTACHMENT MECHANICAL SNUBBER	VT-1	NS	605-127
D1.20	1B21-H0134-WA	INTEGRAL ATTACHMENT RIGID GUIDE	VT-1	1	605-127
D1.20	1B21-H0135-WA	INTEGRAL ATTACHMENT MECHANICAL SNUBBER	VT-1	NS	605-127
D1.20	1B21-H0138-WA	INTEGRAL ATTACHMENT MECHANICAL SNUBBER	VT-1	NS	605-126
D1.20	1B21-H0140-WA	INTEGRAL ATTACHMENT MECHANICAL SNUBBER	VT-1	NS	605-126
D1.20	1B21-H0141-WA	INTEGRAL ATTACHMENT MECHANICAL SNUBBER	VT-1	NS	605-126
D1.20	1B21-H0142-WA	INTEGRAL ATTACHMENT ANCHOR	VT-1	NS	605-112
D1.20	1B21-H0143-WA	INTEGRAL ATTACHMENT MECHANICAL SNUBBER	VT-1	NS	605-124
D1.20	1B21-H0147-WA	INTEGRAL ATTACHMENT MECHANICAL SNUBBER	VT-1	NS	605-124
D1.20	1B21-H0149-WA	INTEGRAL ATTACHMENT VARIABLE SPRING	VT-1	NS	605-112
D1.20	1B21-H0150-WA	INTEGRAL ATTACHMENT MECHANICAL SNUBBER	VT-1	NS	605-112
D1.20	1B21-H0151-WA	INTEGRAL ATTACHMENT MECHANICAL SNUBBER	VT-1	NS	605-112
D1.20	1B21-H0153-WA	INTEGRAL ATTACHMENT MECHANICAL SNUBBER	VT-1	NS	605-112
D1.20	1B21-H0154-WA	INTEGRAL ATTACHMENT MECHANICAL SNUBBER	VT-1	NS	605-112
D1.20	1B21-H0155-WA	INTEGRAL ATTACHMENT RIGID GUIDE	VT-1	NS*	605-112

EXAMINATION CATEGORY: D-A

ITEM NO.	MARK NO.	COMPONENT DESCRIPTION	EXAM METHOD	PERIOD SCHED.	ISI ISO SS-305-
D1.20	1B21-H0156-WA	INTEGRAL ATTACHMENT RIGID GUIDE	VT-1	NS*	605-128
D1.20	1B21-H0157-WA	INTEGRAL ATTACHMENT RIGID GUIDE	VT-1	NS*	605-127
D1.20	1B21-H0158-WA	INTEGRAL ATTACHMENT RIGID GUIDE	VT-1	NS*	605-125
D1.20	1B21-H0159-WA	INTEGRAL ATTACHMENT RIGID GUIDE	VT-1	NS*	605-121
D1.20	1B21-H0160-WA	INTEGRAL ATTACHMENT RIGID STRUT	VT-1	NS*	605-120
D1.20	1B21-H0161-WA	INTEGRAL ATTACHMENT RIGID STRUT	VT-1	NS	605-124
D1.20	1B21-H0162-WA	INTEGRAL ATTACHMENT MECHANICAL SNUBBER	VT-1	NS	605-124
D1.20	1B21-H0163-WA	INTEGRAL ATTACHMENT RIGID GUIDE	VT-1	NS*	605-117
D1.20	1B21-H0164-WA	INTEGRAL ATTACHMENT RIGID GUIDE	VT-1	NS*	605-116
D1.20	1B21-H0165-WA	INTEGRAL ATTACHMENT MECHANICAL SNUBBER	VT-1	NS	605-121
D1.20	1B21-H0166-WA	INTEGRAL ATTACHMENT MECHANICAL SNUBBER	VT-1	NS	605-114
D1.20	1B21-H0167-WA	INTEGRAL ATTACHMENT RIGID GUIDE	VT-1	NS*	605-126
D1.20	1B21-H0168-WA	INTEGRAL ATTACHMENT RIGID GUIDE	VT-1	NS*	605-113
D1.20	1B21-H0170-WA	INTEGRAL ATTACHMENT MECHANICAL SNUBBER	VT-1	NS	605-124
D1.20	1B21-H0171-WA	INTEGRAL ATTACHMENT ANCHOR	VT-1	NS	605-126
D1.20	1B21-H0173-WA	INTEGRAL ATTACHMENT RIGID GUIDE	VT-1	NS*	605-123
D1.20	1B21-H0174-WA	INTEGRAL ATTACHMENT MECHANICAL SNUBBER	VT-1	NS	605-122
D1.20	1B21-H0175-WA	INTEGRAL ATTACHMENT RIGID GUIDE	VT-1	NS*	605-122
D1.20	1B21-H0176-WA	INTEGRAL ATTACHMENT RIGID GUIDE	VT-1	NS*	605-130
D1.20	1B21-H0177-WA	INTEGRAL ATTACHMENT RIGID GUIDE	VT-1	NS*	605-118
D1.20	1B21-H0178-WA	INTEGRAL ATTACHMENT MECHANICAL SNUBBER	VT-1	NS	605-120
D1.20	1B21-H0179-WA	INTEGRAL ATTACHMENT RIGID GUIDE	VT-1	NS*	605-124
D1.20	1B21-H0180-WA	INTEGRAL ATTACHMENT ANCHOR	VT-1	NS	605-119
D1.20	1B21-H0181-WA	INTEGRAL ATTACHMENT MECHANICAL SNUBBER	VT-1	1	605-119
D1.20	1B21-H0186-WA	INTEGRAL ATTACHMENT RIGID GUIDE	VT-1	NS*	605-119
D1.20	1B21-H0187-WA	INTEGRAL ATTACHMENT MECHANICAL SNUBBER	VT-1	NS	605-120
D1.20	1B21-H0191-WA	INTEGRAL ATTACHMENT MECHANICAL SNUBBER	VT-1	NS	605-118
D1.20	1B21-H0192-WA	INTEGRAL ATTACHMENT RIGID GUIDE	VT-1	NS*	605-118
D1.20	1B21-H0203-WA	INTEGRAL ATTACHMENT RIGID STRUT	VT-1	NS	605-116
D1.20	1B21-H0204-WA	INTEGRAL ATTACHMENT RIGID STRUT	VT-1	NS	605-130
D1.20	1B21-H0205-WA	INTEGRAL ATTACHMENT RIGID STRUT	VT-1	NS	605-129
D1.20	1B21-H0206-WA	INTEGRAL ATTACHMENT RIGID STRUT	VT-1	NS	605-128
D1.20	1B21-H0207-WA	INTEGRAL ATTACHMENT RIGID STRUT	VT-1	NS	605-127
D1.20	1B21-H0208-WA	INTEGRAL ATTACHMENT RIGID STRUT	VT-1	NS	605-125
D1.20	1B21-H0209-WA	INTEGRAL ATTACHMENT RIGID STRUT	VT-1	NS	605-124
D1.20	1B21-H0210-WA	INTEGRAL ATTACHMENT RIGID STRUT	VT-1	NS	605-126
D1.20	1B21-H0211-WA	INTEGRAL ATTACHMENT RIGID STRUT	VT-1	NS	605-123
D1.20	1B21-H0212-WA	INTEGRAL ATTACHMENT RIGID STRUT	VT-1	NS	605-122
D1.20	1B21-H0213-WA	INTEGRAL ATTACHMENT RIGID STRUT	VT-1	NS	605-112
D1.20	1B21-H0214-WA	INTEGRAL ATTACHMENT RIGID STRUT	VT-1	NS	605-113
D1.20	1B21-H0215-WA	INTEGRAL ATTACHMENT RIGID STRUT	VT-1	NS	605-114
D1.20	1B21-H0216-WA	INTEGRAL ATTACHMENT RIGID STRUT	VT-1	NS	605-115

ITEM NO.	MARK NO.	COMPONENT DESCRIPTION	EXAM METHOD	PERIOD SCHED.	ISI ISO SS-305-
		EXAMINATION CATEGORY: D-A			
D1.20	1B21-H0217-WA	INTEGRAL ATTACHMENT RIGID STRUT	VT-1	NS	605-121
D1.20	1B21-H0218-WA	INTEGRAL ATTACHMENT RIGID STRUT	VT-1	NS	605-120
D1.20	1B21-H0219-WA	INTEGRAL ATTACHMENT RIGID STRUT	VT-1	NS	605-119
D1.20	1B21-H0220-WA	INTEGRAL ATTACHMENT RIGID STRUT	VT-1	2	605-118
D1.20	1B21-H0221-WA	INTEGRAL ATTACHMENT RIGID STRUT	VT-1	NS	605-117
D1.20	1B21-H0222-WA	INTEGRAL ATTACHMENT MECHANICAL SNUBBER	VT-1	NS	605-119
D1.20	1B21-H0409-WA	INTEGRAL ATTACHMENT VARIABLE SPRING	VT-1	NS	605-125
D1.20	1B21-H0412-WA	INTEGRAL ATTACHMENT MECHANICAL SNUBBER	VT-1	NS	605-121
D1.20	1B21-H0413-WA	INTEGRAL ATTACHMENT VARIABLE SPRING	VT-1	NS	605-121
D1.20	1B21-H0416-WA	INTEGRAL ATTACHMENT VARIABLE SPRING	VT-1	NS	605-115
D1.20	1B21-H0419-WA	INTEGRAL ATTACHMENT VARIABLE SPRING	VT-1	NS	605-118
D1.20	1B21-H0420-WA	INTEGRAL ATTACHMENT VARIABLE SPRING	VT-1	NS	605-112
D1.20	1B21-H0428-WA	INTEGRAL ATTACHMENT VARIABLE SPRING	VT-1	NS	605-113
D1.20	1B21-H0433-WA	INTEGRAL ATTACHMENT VARIABLE SPRING	VT-1	NS	605-129
D1.20	1B21-H0437-WA	INTEGRAL ATTACHMENT VARIABLE SPRING	VT-1	1	605-128
D1.20	1B21-H0439-WA	INTEGRAL ATTACHMENT VARIABLE SPRING	VT-1	NS	605-117
D1.20	1B21-QUE-01-WA	INTEGRAL ATTACHMENT QUENCHER ANCHOR, F041A	VT-1	NS	605-128
D1.20	1B21-QUE-02-WA	INTEGRAL ATTACHMENT QUENCHER ANCHOR, F041B	VT-1	NS	605-113
D1.20	1B21-QUE-03-WA	INTEGRAL ATTACHMENT QUENCHER ANCHOR, F041C	VT-1	NS	605-122
D1.20	1B21-QUE-04-WA	INTEGRAL ATTACHMENT QUENCHER ANCHOR, F041D	VT-1	2	605-118
D1.20	1B21-QUE-05-WA	INTEGRAL ATTACHMENT QUENCHER ANCHOR, F041E	VT-1	NS	605-130
D1.20	1B21-QUE-06-WA	INTEGRAL ATTACHMENT QUENCHER ANCHOR, F041F	VT-1	NS	605-115
D1.20	1B21-QUE-07-WA	INTEGRAL ATTACHMENT QUENCHER ANCHOR, F041G	VT-1	NS	605-125
D1.20	1B21-QUE-08-WA	INTEGRAL ATTACHMENT QUENCHER ANCHOR, F041K	VT-1	NS	605-120
D1.20	1B21-QUE-09-WA	INTEGRAL ATTACHMENT QUENCHER ANCHOR, F047B	VT-1	NS	605-112
D1.20	1B21-QUE-10-WA	INTEGRAL ATTACHMENT QUENCHER ANCHOR, F047C	VT-1	NS	605-126
D1.20	1B21-QUE-11-WA	INTEGRAL ATTACHMENT QUENCHER ANCHOR, F047D	VT-1	NS	605-119
D1.20	1B21-QUE-12-WA	INTEGRAL ATTACHMENT QUENCHER ANCHOR, F047F	VT-1	NS	605-121
D1.20	1B21-QUE-13-WA	INTEGRAL ATTACHMENT QUENCHER ANCHOR, F047G	VT-1	NS	605-127
D1.20	1B21-QUE-14-WA	INTEGRAL ATTACHMENT QUENCHER ANCHOR, F047H	VT-1	NS	605-117
D1.20	1B21-QUE-15-WA	INTEGRAL ATTACHMENT QUENCHER ANCHOR, F051A	VT-1	NS	605-129
D1.20	1B21-QUE-16-WA	INTEGRAL ATTACHMENT QUENCHER ANCHOR, F051B	VT-1	NS	605-114
D1.20	1B21-QUE-17-WA	INTEGRAL ATTACHMENT QUENCHER ANCHOR, F051C	VT-1	NS	605-123
D1.20	1B21-QUE-18-WA	INTEGRAL ATTACHMENT QUENCHER ANCHOR, F051D	VT-1	NS	605-116
D1.20	1B21-QUE-19-WA	INTEGRAL ATTACHMENT QUENCHER ANCHOR, F051G	VT-1	NS	605-124
D1.20	1E12-H0060-WA	INTEGRAL ATTACHMENT MECHANICAL SNUBBER	VT-1	NS	642-149
D1.20	1E12-H0061-WA	INTEGRAL ATTACHMENT VARIABLE SPRING	VT-1	NS	642-149
D1.20	1E12-H0062-WA	INTEGRAL ATTACHMENT RIGID GUIDE	VT-1	3	642-149
D1.20	1E12-H0573-WA	INTEGRAL ATTACHMENT RIGID STRUT	VT-1	NS	642-149

ITEM NO.	MARK NO.	COMPONENT DESCRIPTION	EXAM METHOD	PERIOD SCHED.	ISI ISO SS-305-
		EXAMINATION CATEGORY: D-A			
D1.20	1E22-D008-WA	INTEGRAL ATTACHMENT EXHAUST SILENCE SUPPORT ANCHOR	VT-1	NS	355-101
D1.20	1E22-H0132-WA	INTEGRAL ATTACHMENT ANCHOR	VT-1	2	355-101
D1.20	1E22-H0133-WA	INTEGRAL ATTACHMENT RIGID STRUT	VT-1	NS	355-101
D1.20	1E22-H0136-WA	INTEGRAL ATTACHMENT VARIABLE SPRING	VT-1	NS	355-101
D1.20	1E22-H0138-WA	INTEGRAL ATTACHMENT VARIABLE SPRING	VT-1	NS	355-101
D1.20	1E22-H0139-WA	INTEGRAL ATTACHMENT VARIABLE SPRING	VT-1	NS	355-101
D1.10	1E22-S001-WA	JACKET WATER HEAT EXCHANGER VESSEL ANCHOR	VT-1	2	791-101
D1.10	1E22-S004A-WA	INTEGRAL ATTACH AIR RECEIVER TANK (A004B) SUPPORT ANCHOR	VT-1	NS	351-101
D1.10	1E22-S004B-WA	INTEGRAL ATTACH AIR RECEIVER TANK (A004B) SUPPORT ANCHOR	VT-1	3	351-101
D1.10	1P42-A001A-WA	INTEGRAL ATTACHMENT SURGE TANK ANCHOR	VT-1	1	621-113
D1.10	1P42-A001B-WA	INTEGRAL ATTACHMENT SURGE TANK ANCHOR	VT-1	NS	621-113
D1.10	1P42-B001A-WA	INTEGRAL ATTACHMENT HEAT EXCHANGER ANCHOR	VT-1	1	621-112
D1.10	1P42-B001B-WA	INTEGRAL ATTACHMENT HEAT EXCHANGER ANCHOR	VT-1	NS	621-112
D1.30	1P42-C001A-WA	INTEGRAL ATTACHMENT PUMP ANCHOR	VT-1	2	4549-22-043-2
D1.30	1P42-C001B-WA	INTEGRAL ATTACHMENT PUMP ANCHOR	VT-1	NS	4549-22-043-2
D1.20	1P42-H0102-WA	INTEGRAL ATTACHMENT RIGID GUIDE	VT-1	NS	621-106
D1.20	1P42-H0108-WA	INTEGRAL ATTACHMENT RIGID STRUT	VT-1	NS	621-108
D1.20	1P42-H0110-WA	INTEGRAL ATTACHMENT RIGID ROD	VT-1	NS	621-106
D1.20	1P42-H0111-WA	INTEGRAL ATTACHMENT RIGID GUIDE	VT-1	NS	621-106
D1.20	1P42-H0112-WA	INTEGRAL ATTACHMENT VARIABLE SPRING	VT-1	3	621-106
D1.20	1P42-H0115-WA	INTEGRAL ATTACHMENT RIGID GUIDE	VT-1	NS	621-107
D1.20	1P42-H0120-WA	INTEGRAL ATTACHMENT VARIABLE SPRING	VT-1	NS	621-106
D1.20	1P42-H0122-WA	INTEGRAL ATTACHMENT RIGID GUIDE	VT-1	1	621-106
D1.20	1P42-H0123-WA	INTEGRAL ATTACHMENT RIGID STRUT	VT-1	NS	621-107
D1.20	1P42-H0148-WA	INTEGRAL ATTACHMENT RIGID GUIDE	VT-1	NS	621-109
D1.20	1P42-H0171-WA	INTEGRAL ATTACHMENT ANCHOR	VT-1	2	621-107
D1.20	1P42-H0191-WA	INTEGRAL ATTACHMENT ANCHOR	VT-1	NS	621-101
D1.20	1P42-H0210-WA	INTEGRAL ATTACHMENT ANCHOR	VT-1	NS	621-103
D1.30	1P42-H0213-WA	INTEGRAL ATTACHMENT RIGID STRUT	VT-1	NS	621-103
D1.20	1P42-H0219-WA	INTEGRAL ATTACHMENT ANCHOR	VT-1	NS	621-109
D1.20	1P42-H0221-WA	INTEGRAL ATTACHMENT RIGID GUIDE	VT-1	NS*	621-104
D1.20	1P42-H0222-WA	INTEGRAL ATTACHMENT RIGID GUIDE	VT-1	NS*	621-104
D1.20	1P42-H0234-WA	INTEGRAL ATTACHMENT RIGID GUIDE	VT-1	NS*	621-105
D1.20	1P42-H0236-WA	INTEGRAL ATTACHMENT ANCHOR	VT-1	NS	621-103
D1.20	1P42-H0239-WA	INTEGRAL ATTACHMENT RIGID STRUT	VT-1	NS	621-103
D1.20	1P42-H0240-WA	INTEGRAL ATTACHMENT RIGID STRUT	VT-1	NS	621-103
D1.20	1P42-H0241-WA	INTEGRAL ATTACHMENT RIGID STRUT	VT-1	NS	621-104
D1.20	1P42-H0242-WA	INTEGRAL ATTACHMENT RIGID STRUT	VT-1	NS	621-104

EXAMINATION CATEGORY: D-A

ITEM NO.	MARK NO.	COMPONENT DESCRIPTION	EXAM METHOD	PERIOD SCHED.	ISI ISO SS-305-
D1.30	1P45-C001A-WA	INTEGRAL ATTACHMENT PUMP ANCHOR	VT-1	1	791-108
D1.30	1P45-C001B-WA	INTEGRAL ATTACHMENT PUMP ANCHOR	VT-1	NS	791-109
D1.30	1P45-C002-WA	INTEGRAL ATTACHMENT PUMP ANCHOR	VT-1	NS	791-107
D1.10	1P45-D002A-WA	INTEGRAL ATTACHMENT FILTER ANCHOR	VT-1	2	791-108
D1.10	1P45-D002B-WA	INTEGRAL ATTACHMENT FILTER ANCHOR	VT-1	NS	791-109
D1.10	1P45-D003-WA	INTEGRAL ATTACHMENT FILTER ANCHOR	VT-1	NS	791-107
D1.20	1P45-H0020-WA	INTEGRAL ATTACHMENT ANCHOR	VT-1	NS	742-103
D1.20	1P45-H0021-WA	INTEGRAL ATTACHMENT ANCHOR	VT-1	NS	742-103
D1.20	1P45-H0022-WA	INTEGRAL ATTACHMENT ANCHOR	VT-1	NS*	792-106
D1.20	1P45-H0033-WA	INTEGRAL ATTACHMENT ANCHOR	VT-1	NS	792-105
D1.20	1P45-H0034-WA	INTEGRAL ATTACHMENT ANCHOR	VT-1	NS	792-106
D1.20	1P45-H0035-WA	INTEGRAL ATTACHMENT ANCHOR	VT-1	NS	792-117
D1.20	1P45-H0047-WA	INTEGRAL ATTACHMENT ANCHOR	VT-1	NS	792-116
D1.20	1P45-H0048-WA	INTEGRAL ATTACHMENT ANCHOR	VT-1	NS	792-115
D1.20	1P45-H0049-WA	INTEGRAL ATTACHMENT ANCHOR	VT-1	NS*	792-112
D1.20	1P45-H0060-WA	INTEGRAL ATTACHMENT ANCHOR	VT-1	NS	792-112
D1.20	1P45-H0070-WA	INTEGRAL ATTACHMENT ANCHOR	VT-1	1	792-112
D1.20	1P45-H0071-WA	INTEGRAL ATTACHMENT VARIABLE SPRING	VT-1	NS	792-113
D1.20	1P45-H0077-WA	INTEGRAL ATTACHMENT ANCHOR	VT-1	NS	792-113
D1.20	1P45-H0089-WA	INTEGRAL ATTACHMENT ANCHOR	VT-1	NS	792-118
D1.20	1P45-H0097-WA	INTEGRAL ATTACHMENT MECHANICAL SNUBBER	VT-1	NS	791-111
D1.20	1P45-H0100-WA	INTEGRAL ATTACHMENT ANCHOR	VT-1	NS	791-111
D1.20	1P45-H0123-WA	INTEGRAL ATTACHMENT ANCHOR	VT-1	NS	792-108
D1.20	1P45-H0124-WA	INTEGRAL ATTACHMENT MECHANICAL SNUBBER	VT-1	NS	792-107
D1.20	1P45-H0127-WA	INTEGRAL ATTACHMENT ANCHOR	VT-1	NS*	792-107
D1.20	1P45-H0128-WA	INTEGRAL ATTACHMENT ANCHOR	VT-1	NS	792-107
D1.20	1P45-H0159-WA	INTEGRAL ATTACHMENT ANCHOR	VT-1	3	792-104
D1.20	1P45-H0169-WA	INTEGRAL ATTACHMENT RIGID STRUT	VT-1	NS	792-104
D1.20	1P45-H0170-WA	INTEGRAL ATTACHMENT RIGID ROD	VT-1	NS	791-106
D1.20	1P45-H0172-WA	INTEGRAL ATTACHMENT ANCHOR	VT-1	NS	791-106
D1.20	1P45-H0175-WA	INTEGRAL ATTACHMENT VARIABLE SPRING	VT-1	NS	791-106
D1.20	1P45-H0183-WA	INTEGRAL ATTACHMENT MECHANICAL SNUBBER	VT-1	1	791-106
D1.20	1P45-H0186-WA	INTEGRAL ATTACHMENT MECHANICAL SNUBBER	VT-1	NS	791-106
D1.20	1P45-H0189-WA	INTEGRAL ATTACHMENT ANCHOR	VT-1	NS	791-106
D1.20	1P45-H0191-WA	INTEGRAL ATTACHMENT RIGID GUIDE	VT-1	NS*	791-113
D1.20	1P45-H0210-WA	INTEGRAL ATTACHMENT ANCHOR	VT-1	NS	791-113
D1.20	1P45-H0212-WA	INTEGRAL ATTACHMENT RIGID STRUT	VT-1	NS	791-112
D1.20	1P45-H0215-WA	INTEGRAL ATTACHMENT RIGID STRUT	VT-1	NS	791-112
D1.20	1P45-H0222-WA	INTEGRAL ATTACHMENT MECHANICAL SNUBBER	VT-1	NS	791-112
D1.20	1P45-H0226-WA	INTEGRAL ATTACHMENT RIGID STRUT	VT-1	NS	791-112
D1.20	1P45-H0229-WA	INTEGRAL ATTACHMENT ANCHOR	VT-1	NS	791-112
D1.20	1P45-H0232-WA	INTEGRAL ATTACHMENT ANCHOR	VT-1	NS	791-103

ITEM NO.	MARK NO.	COMPONENT DESCRIPTION	EXAM METHOD	PERIOD SCHED.	ISI ISO SS-305-
		EXAMINATION CATEGORY: D-A			
D1.20	1P45-H0243-WA	INTEGRAL ATTACHMENT ANCHOR	VT-1	NS	791-102
D1.20	1P45-H0256-WA	INTEGRAL ATTACHMENT RIGID STRUT	VT-1	NS	791-103
D1.20	1P45-H0271-WA	INTEGRAL ATTACHMENT RIGID GUIDE	VT-1	NS*	791-104
D1.20	1P45-H0272-WA	INTEGRAL ATTACHMENT VARIABLE SPRING	VT-1	NS	791-104
D1.20	1P45-H0273-WA	INTEGRAL ATTACHMENT RIGID STRUT	VT-1	NS	791-104
D1.20	1P45-H0274-WA	INTEGRAL ATTACHMENT RIGID GUIDE	VT-1	NS*	791-105
D1.20	1P45-H0277-WA	INTEGRAL ATTACHMENT VARIABLE SPRING	VT-1	NS	791-105
D1.20	1P45-H0287-WA	INTEGRAL ATTACHMENT ANCHOR	VT-1	NS	791-105
D1.20	1P45-H0293-WA	INTEGRAL ATTACHMENT ANCHOR	VT-1	NS	792-109
D1.20	1P45-H0294-WA	INTEGRAL ATTACHMENT RIGID SUPPORT	VT-1	NS	792-109
D1.20	1P45-H0297-WA	INTEGRAL ATTACHMENT RIGID GUIDE	VT-1	NS	792-109
D1.20	1P45-H0298-WA	INTEGRAL ATTACHMENT RIGID GUIDE	VT-1	NS	792-109
D1.20	1P45-H0308-WA	INTEGRAL ATTACHMENT ANCHOR	VT-1	NS	792-114
D1.20	1P45-H0309-WA	INTEGRAL ATTACHMENT RIGID SUPPORT	VT-1	NS	792-309
D1.20	1P45-H0312-WA	INTEGRAL ATTACHMENT RIGID GUIDE	VT-1	1	792-115
D1.20	1P45-H0313-WA	INTEGRAL ATTACHMENT RIGID GUIDE	VT-1	NS	792-115
D1.20	1P45-H0353-WA	INTEGRAL ATTACHMENT MECHANICAL SNUBBER	VT-1	NS	792-104
D1.20	1P45-H0357-WA	INTEGRAL ATTACHMENT RIGID STRUT	VT-1	3	792-103
D1.20	1P45-H0365-WA	INTEGRAL ATTACHMENT RIGID GUIDE	VT-1	NS	792-110
D1.20	1P45-H0369-WA	INTEGRAL ATTACHMENT RIGID SUPPORT	VT-1	NS	792-110
D1.20	1P45-H0382-WA	INTEGRAL ATTACHMENT RIGID STRUT	VT-1	2	792-102
D1.20	1P45-H0386-WA	INTEGRAL ATTACHMENT RIGID GUIDE	VT-1	NS	792-102
D1.20	1P45-H0388-WA	INTEGRAL ATTACHMENT ANCHOR	VT-1	NS	792-101
D1.20	1P45-H0389-WA	INTEGRAL ATTACHMENT ANCHOR	VT-1	NS	792-111
D1.20	1P45-H0395-WA	INTEGRAL ATTACHMENT RIGID STRUT	VT-1	NS	791-105
D1.20	1P45-H0413-WA	INTEGRAL ATTACHMENT RIGID STRUT	VT-1	NS	791-101
D1.20	1P45-H0417-WA	INTEGRAL ATTACHMENT RIGID GUIDE	VT-1	NS*	791-101
D1.20	1P45-H0422-WA	INTEGRAL ATTACHMENT MECHANICAL SNUBBER	VT-1	NS	791-102
D1.20	1P45-H0428-WA	INTEGRAL ATTACHMENT RIGID GUIDE	VT-1	NS	791-102
D1.20	1P45-H0431-WA	INTEGRAL ATTACHMENT RIGID SUPPORT	VT-1	NS	791-102
D1.20	1P45-H0509-WA	INTEGRAL ATTACHMENT MECHANICAL SNUBBER	VT-1	NS	792-111
D1.20	1P45-H0510-WA	INTEGRAL ATTACHMENT MECHANICAL SNUBBER	VT-1	2	792-114
D1.20	1P45-H0511-WA	INTEGRAL ATTACHMENT RIGID STRUT	VT-1	NS	792-114
D1.20	1P45-H0512-WA	INTEGRAL ATTACHMENT MECHANICAL SNUBBER	VT-1	NS	792-111
D1.20	1P45-H0515-WA	INTEGRAL ATTACHMENT RIGID STRUT	VT-1	NS	792-114
D1.20	1P45-H0516-WA	INTEGRAL ATTACHMENT MECHANICAL SNUBBER	VT-1	NS	792-111
D1.20	1P45-H0521-WA	INTEGRAL ATTACHMENT MECHANICAL SNUBBER	VT-1	NS	792-101
D1.20	1P45-H0526-WA	INTEGRAL ATTACHMENT MECHANICAL SNUBBER	VT-1	NS	792-101
D1.20	1P45-H0625-WA	INTEGRAL ATTACHMENT ANCHOR	VT-1	NS	791-101
D1.20	1P45-H0643-WA	INTEGRAL ATTACHMENT RIGID GUIDE	VT-1	NS*	791-110
D1.20	1P45-H0648-WA	INTEGRAL ATTACHMENT RIGID GUIDE	VT-1	NS	791-110
D1.20	1P45-H0649-WA	INTEGRAL ATTACHMENT RIGID GUIDE	VT-1	NS*	791-110

ITEM NO.	MARK NO.	COMPONENT DESCRIPTION	EXAM METHOD	PERIOD SCHED.	ISI ISO SS-305-
		EXAMINATION CATEGORY: D-A			
D1.20	1P45-H0654-WA	INTEGRAL ATTACHMENT RIGID GUIDE	VT-1	NS	791-110
D1.20	1P45-H0656-WA	INTEGRAL ATTACHMENT RIGID GUIDE	VT-1	NS	791-110
D1.20	1P45-H0659-WA	INTEGRAL ATTACHMENT RIGID GUIDE	VT-1	NS*	791-110
D1.20	1P45-H5000-WA	INTEGRAL ATTACHMENT RIGID GUIDE	VT-1	NS	791-105
D1.20	1P45-H5002-WA	INTEGRAL ATTACHMENT RIGID STRUT	VT-1	NS	791-106
D1.20	1P45-H5003-WA	INTEGRAL ATTACHMENT RIGID STRUT	VT-1	3	791-112
D1.10	1P47-A002A-WA	INTEGRAL ATTACHMENT EXPANSION TANK ANCHOR	VT-1	2	002-115
D1.10	1P47-A002B-WA	INTEGRAL ATTACHMENT EXPANSION TANK ANCHOR	VT-1	NS	002-115
D1.10	1P47-B001A-WA	INTEGRAL ATTACHMENT CHILLER ANCHOR	VT-1	1	002-116
D1.10	1P47-B001B-WA	INTEGRAL ATTACHMENT CHILLER ANCHOR	VT-1	NS	002-116
D1.10	1P47-B001C-WA	INTEGRAL ATTACHMENT CHILLER ANCHOR	VT-1	NS	002-116
D1.30	1P47-C001A-WA	INTEGRAL ATTACHMENT PUMP ANCHOR	VT-1	2	002-117
D1.30	1P47-C001B-WA	INTEGRAL ATTACHMENT PUMP ANCHOR	VT-1	NS	002-117
D1.30	1P47-C001C-WA	INTEGRAL ATTACHMENT PUMP ANCHOR	VT-1	NS	002-117
D1.20	1P47-H0001-WA	INTEGRAL ATTACHMENT RIGID SUPPORT	VT-1	NS	002-101
D1.20	1P47-H0002-WA	INTEGRAL ATTACHMENT RIGID GUIDE	VT-1	NS	002-101
D1.20	1P47-H0014-WA	INTEGRAL ATTACHMENT RIGID GUIDE	VT-1	NS	002-101
D1.20	1P47-H0015-WA	INTEGRAL ATTACHMENT RIGID GUIDE	VT-1	NS	002-101
D1.20	1P47-H0016-WA	INTEGRAL ATTACHMENT RIGID SUPPORT	VT-1	NS	002-102
D1.20	1P47-H0019-WA	INTEGRAL ATTACHMENT RIGID STRUT	VT-1	NS	002-102
D1.20	1P47-H0021-WA	INTEGRAL ATTACHMENT RIGID SUPPORT	VT-1	NS	002-107
D1.20	1P47-H0029-WA	INTEGRAL ATTACHMENT RIGID SUPPORT	VT-1	NS	002-108
D1.20	1P47-H0030-WA	INTEGRAL ATTACHMENT RIGID SUPPORT	VT-1	NS	002-109
D1.20	1P47-H0031-WA	INTEGRAL ATTACHMENT RIGID SUPPORT	VT-1	3	002-103
D1.20	1P47-H0034-WA	INTEGRAL ATTACHMENT RIGID STRUT	VT-1	NS	002-103
D1.20	1P47-H0043-WA	INTEGRAL ATTACHMENT RIGID STRUT	VT-1	NS	002-103
D1.20	1P47-H0046-WA	INTEGRAL ATTACHMENT RIGID STRUT	VT-1	NS	002-107
D1.20	1P47-H0215-WA	INTEGRAL ATTACHMENT ANCHOR	VT-1	NS	002-110
D1.20	1P47-H0218-WA	INTEGRAL ATTACHMENT ANCHOR	VT-1	NS	002-103
D1.20	1P47-H0219-WA	INTEGRAL ATTACHMENT ANCHOR	VT-1	1	002-113
D1.20	1P47-H0220-WA	INTEGRAL ATTACHMENT ANCHOR	VT-1	NS	002-107
D1.20	1P47-H0221-WA	INTEGRAL ATTACHMENT ANCHOR	VT-1	NS	002-105
D1.20	1P47-H0222-WA	INTEGRAL ATTACHMENT ANCHOR	VT-1	NS	002-102
D1.20	1P47-H0278-WA	INTEGRAL ATTACHMENT MECHANICAL SNUBBER	VT-1	NS	002-103
D1.20	1P47-H0279-WA	INTEGRAL ATTACHMENT MECHANICAL SNUBBER	VT-1	2	002-113
D1.20	1P47-H0286-WA	INTEGRAL ATTACHMENT RIGID STRUT	VT-1	NS	002-105
D1.20	1P47-H0287-WA	INTEGRAL ATTACHMENT RIGID STRUT	VT-1	NS	002-110
D1.20	1P47-H0348-WA	INTEGRAL ATTACHMENT RIGID STRUT	VT-1	NS	002-104
D1.20	1P47-H0349-WA	INTEGRAL ATTACHMENT RIGID STRUT	VT-1	NS	002-113
D1.20	1P47-H0357-WA	INTEGRAL ATTACHMENT RIGID STRUT	VT-1	NS	002-105
D1.20	1P47-H0358-WA	INTEGRAL ATTACHMENT RIGID STRUT	VT-1	NS	002-111

ITEM NO.	MARK NO.	COMPONENT DESCRIPTION	EXAM METHOD	PERIOD SCHED.	ISI ISO SS-305-
		EXAMINATION CATEGORY: D-A			
D1.20	1P47-H0378-WA	INTEGRAL ATTACHMENT VARIABLE SPRING	VT-1	NS	002-109
D1.20	1P47-H0379-WA	INTEGRAL ATTACHMENT VARIABLE SPRING	VT-1	NS	002-109
D1.20	1P47-H0380-WA	INTEGRAL ATTACHMENT VARIABLE SPRING	VT-1	NS	002-108
D1.20	1P47-H0381-WA	INTEGRAL ATTACHMENT VARIABLE SPRING	VT-1	NS	002-108
D1.20	1P47-H0382-WA	INTEGRAL ATTACHMENT VARIABLE SPRING	VT-1	NS	002-107
D1.10	OP49-C002A-WA	INTEGRAL ATTACHMENT SCREEN WASH PUMP ANCHOR	VT-1	3	214-101
D1.10	OP49-C002B-WA	INTEGRAL ATTACHMENT SCREEN WASH PUMP ANCHOR	VT-1	NS	214-102
D1.10	OP49-D003A-WA	INTEGRAL ATTACHMENT SCREEN WASH STRAINER ANCHOR	VT-1	2	214-101
D1.10	OP49-D003B-WA	INTEGRAL ATTACHMENT SCREEN WASH STRAINER ANCHOR	VT-1	NS	214-102
D1.10	1P57-A003A-WA	INTEGRAL ATTACHMENT ADS SAFETY-RELATED AIR STORAGE TANK A	VT-1	1	271-101
D1.10	1P57-A003B-WA	INTEGRAL ATTACHMENT ADS SAFETY-RELATED AIR STORAGE TANK B	VT-1	NS	271-101
D1.10	1R44-A001A-WA	INTEGRAL ATTACHMENT STARTING AIR RECEIVER TANK ANCHOR	VT-1	3	351-102
D1.10	1R44-A001B-WA	INTEGRAL ATTACHMENT STARTING AIR RECEIVER TANK ANCHOR	VT-1	NS	351-104
D1.10	1R44-A002A-WA	INTEGRAL ATTACHMENT STARTING AIR RECEIVER TANK ANCHOR	VT-1	NS	351-103
D1.10	1R44-A002B-WA	INTEGRAL ATTACHMENT STARTING AIR RECEIVER TANK ANCHOR	VT-1	NS	351-105
D1.10	1R45-A003A-WA	INTEGRAL ATTACHMENT FUEL OIL DAY TK ANCHOR	VT-1	3	355-110
D1.10	1R45-A003B-WA	INTEGRAL ATTACHMENT FUEL OIL DAY TK ANCHOR	VT-1	NS	355-111
D1.10	1R45-A005-WA	INTEGRAL ATTACHMENT HPCS FUEL OIL DAY TANK ANCHOR	VT-1	NS	356-101
D1.10	1R46-A003A-WA	INTEGRAL ATTACHMENT JACKET WATER STAND PIPE ANCHOR	VT-1	3	354-105
D1.10	1R46-A003B-WA	INTEGRAL ATTACHMENT JACKET WATER STAND PIPE ANCHOR	VT-1	NS	354-106
D1.10	1R46-B001A-WA	INTEGRAL ATTACHMENT LUBE OIL HEAT EXCHANGER ANCHOR	VT-1	2	354-101
D1.10	1R46-B001B-WA	INTEGRAL ATTACHMENT LUBE OIL HEAT EXCHANGER ANCHOR	VT-1	NS	354-102
D1.10	1R46-B002A-WA	INTEGRAL ATTACHMENT LUBE OIL HEAT EXCHANGER ANCHOR	VT-1	NS	354-103
D1.10	1R46-B002B-WA	INTEGRAL ATTACHMENT LUBE OIL HEAT EXCHANGER ANCHOR	VT-1	NS	354-104
D1.10	1R47-A001A-WA	INTEGRAL ATTACHMENT LUBE OIL TANK ANCHOR	VT-1	3	353-103
D1.10	1R47-A001B-WA	INTEGRAL ATTACHMENT LUBE OIL TANK ANCHOR	VT-1	NS	353-104
D1.10	1R47-D005A-WA	INTEGRAL ATTACHMENT FILTER ANCHOR	VT-1	NS	353-105
D1.10	1R47-D005B-WA	INTEGRAL ATTACHMENT FILTER ANCHOR	VT-1	NS	353-106
D1.10	1R47-D006A-WA	INTEGRAL ATTACHMENT WARM FILTER ANCHOR	VT-1	1	353-101
D1.10	1R47-D006B-WA	INTEGRAL ATTACHMENT WARM FILTER ANCHOR	VT-1	NS	353-102
D1.20	1R48-D001A-WA	INTEGRAL ATTACHMENT STANDBY DIESEL SILENCER ANCHOR	VT-1	NS	355-105
D1.20	1R48-D001B-WA	INTEGRAL ATTACHMENT STANDBY DIESEL SILENCER ANCHOR	VT-1	3	355-104
D1.20	1R48-D002A-WA	INTEGRAL ATTACHMENT STANDBY DIESEL SILENCER ANCHOR	VT-1	NS	355-103
D1.20	1R48-D002B-WA	INTEGRAL ATTACHMENT STANDBY DIESEL SILENCER ANCHOR	VT-1	NS	355-102
D1.20	1R48-D003A-WA	INTEGRAL ATTACHMENT STANDBY DIESEL SILENCER ANCHOR	VT-1	NS	355-103

ITEM NO.	MARK NO.	COMPONENT DESCRIPTION	EXAM METHOD	PERIOD SCHED.	ISI ISO SS-305-
		EXAMINATION CATEGORY: D-A			
D1.20	1R48-D003B-WA	INTEGRAL ATTACHMENT STANDBY DIESEL SILENCER ANCHOR	VT-1	NS	355-102
D1.20	1R48-H0005-WA	INTEGRAL ATTACHMENT ANCHOR	VT-1	NS	355-103
D1.20	1R48-H0006-WA	INTEGRAL ATTACHMENT ANCHOR	VT-1	NS	355-103
D1.20	1R48-H0011-WA	INTEGRAL ATTACHMENT ANCHOR	VT-1	NS	355-103
D1.20	1R48-H0012-WA	INTEGRAL ATTACHMENT ANCHOR	VT-1	NS	355-103
D1.20	1R48-H0013-WA	INTEGRAL ATTACHMENT ANCHOR	VT-1	2	355-102
D1.20	1R48-H0018-WA	INTEGRAL ATTACHMENT ANCHOR	VT-1	NS	355-102
D1.20	1R48-H0019-WA	INTEGRAL ATTACHMENT ANCHOR	VT-1	NS	355-102
D1.20	1R48-H0024-WA	INTEGRAL ATTACHMENT ANCHOR	VT-1	NS	355-102
D1.20	1R48-H0027-WA	INTEGRAL ATTACHMENT MECHANICAL SNUBBER	VT-1	3	355-105
D1.20	1R48-H0034-WA	INTEGRAL ATTACHMENT MECHANICAL SNUBBER	VT-1	NS	355-104
D1.20	1R48-H0041-WA	INTEGRAL ATTACHMENT VARIABLE SPRING	VT-1	NS	355-105
D1.20	1R48-H0042-WA	INTEGRAL ATTACHMENT VARIABLE SPRING	VT-1	NS	355-104
D1.20	1R48-H0045-WA	INTEGRAL ATTACHMENT RIGID SUPPORT	VT-1	NS	355-106
D1.20	1R48-H0047-WA	INTEGRAL ATTACHMENT RIGID SUPPORT	VT-1	NS	355-106
D1.20	1R48-H0050-WA	INTEGRAL ATTACHMENT RIGID GUIDE	VT-1	NS	355-107
D1.20	1R48-H0052-WA	INTEGRAL ATTACHMENT RIGID SUPPORT	VT-1	NS	355-107
D1.20	2P42-H0009-WA	INTEGRAL ATTACHMENT RIGID GUIDE	VT-1	NS	623-106
D1.20	2P42-H0010-WA	INTEGRAL ATTACHMENT RIGID GUIDE	VT-1	NS	623-107
D1.20	2P42-H0018-WA	INTEGRAL ATTACHMENT RIGID STRUT	VT-1	NS	623-106
D1.20	2P42-H0020-WA	INTEGRAL ATTACHMENT RIGID STRUT	VT-1	NS	623-107
D1.20	2P42-H0024-WA	INTEGRAL ATTACHMENT RIGID GUIDE	VT-1	NS	623-112
D1.20	2P42-H0025-WA	INTEGRAL ATTACHMENT RIGID GUIDE	VT-1	NS*	623-110
D1.20	2P42-H0026-WA	INTEGRAL ATTACHMENT RIGID STRUT	VT-1	NS	623-110
D1.20	2P42-H0039-WA	INTEGRAL ATTACHMENT ANCHOR	VT-1	NS	623-101
D1.20	2P42-H0044-WA	INTEGRAL ATTACHMENT ANCHOR	VT-1	NS	623-111
D1.20	2P42-H0050-WA	INTEGRAL ATTACHMENT MECHANICAL SNUBBER	VT-1	NS	623-112
D1.20	2P42-H0143-WA	INTEGRAL ATTACHMENT RIGID GUIDE	VT-1	NS	623-108
D1.20	2P42-H0146-WA	INTEGRAL ATTACHMENT RIGID SUPPORT	VT-1	NS	623-108
D1.20	2P42-H0148-WA	INTEGRAL ATTACHMENT RIGID SUPPORT	VT-1	3	623-104
D1.20	2P42-H0153-WA	INTEGRAL ATTACHMENT RIGID STRUT	VT-1	NS	623-103
D1.20	2P42-H0265-WA	INTEGRAL ATTACHMENT ANCHOR	VT-1	NS	623-104
D1.20	2P42-H0273-WA	INTEGRAL ATTACHMENT ANCHOR	VT-1	NS	623-108
D1.10	1G41-A002A-WA	INTEGRAL ATTACHMENT, SURGE TANK ANCHOR	VT-1	1	655-118
D1.10	1G41-A002B-WA	INTEGRAL ATTACHMENT, SURGE TANK ANCHOR	VT-1	NS	655-119
D1.10	1G41-B001A-WA	INTEGRAL ATTACHMENT, HEAT EXCHANGER ANCHOR	VT-1	3	654-108
D1.10	1G41-B001B-WA	INTEGRAL ATTACHMENT, HEAT EXCHANGER ANCHOR	VT-1	NS	654-108
D1.20	1G41-H0013-WA	INTEGRAL ATTACHMENT RIGID GUIDE	VT-1	NS	655-117
D1.20	1G41-H0026-WA	INTEGRAL ATTACHMENT RIGID STRUT	VT-1	NS	655-117
D1.20	1G41-H0038-WA	INTEGRAL ATTACHMENT VARIABLE SPRING	VT-1	NS	655-110

ITEM NO.	MARK NO.	COMPONENT DESCRIPTION	EXAM METHOD	PERIOD SCHED.	ISI ISO SS-305-
		EXAMINATION CATEGORY: D-A			
D1.20	1G41-H0041-WA	INTEGRAL ATTACHMENT RIGID STRUT	VT-1	NS	655-110
D1.20	1G41-H0045-WA	INTEGRAL ATTACHMENT RIGID STRUT	VT-1	NS	655-110
D1.20	1G41-H0054-WA	INTEGRAL ATTACHMENT RIGID STRUT	VT-1	NS	655-107
D1.20	1G41-H0070-WA	INTEGRAL ATTACHMENT MECHANICAL SNUBBER	VT-1	NS	654-101
D1.20	1G41-H0129-WA	INTEGRAL ATTACHMENT RIGID STRUT	VT-1	1	655-108
D1.20	1G41-H0139-WA	INTEGRAL ATTACHMENT RIGID STRUT	VT-1	NS	655-108
D1.20	1G41-H0184-WA	INTEGRAL ATTACHMENT RIGID STRUT	VT-1	NS	655-108
D1.20	1G41-H0221-WA	INTEGRAL ATTACHMENT RIGID GUIDE	VT-1	NS	651-101
D1.20	1G41-H0228-WA	INTEGRAL ATTACHMENT MECHANICAL SNUBBER	VT-1	NS	655-111
D1.20	1G41-H0236-WA	INTEGRAL ATTACHMENT MECHANICAL SNUBBER	VT-1	NS	655-111
D1.20	1G41-H0238-WA	INTEGRAL ATTACHMENT MECHANICAL SNUBBER	VT-1	NS	655-112
D1.20	1G41-H0242-WA	INTEGRAL ATTACHMENT MECHANICAL SNUBBER	VT-1	NS	655-109
D1.20	1G41-H0244-WA	INTEGRAL ATTACHMENT RIGID STRUT	VT-1	NS	655-112
D1.20	1G41-H0273-WA	INTEGRAL ATTACHMENT RIGID STRUT	VT-1	NS	654-107
D1.20	1G41-H0275-WA	INTEGRAL ATTACHMENT RIGID STRUT	VT-1	2	654-107
D1.20	1G41-H0281-WA	INTEGRAL ATTACHMENT RIGID GUIDE	VT-1	NS	651-103
D1.20	1G41-H0309-WA	INTEGRAL ATTACHMENT RIGID GUIDE	VT-1	NS	654-103
D1.20	1G41-H0316-WA	INTEGRAL ATTACHMENT RIGID GUIDE	VT-1	NS	654-102
D1.20	1G41-H0396-WA	INTEGRAL ATTACHMENT RIGID GUIDE	VT-1	NS*	655-114
D1.20	1G41-H0404-WA	INTEGRAL ATTACHMENT ANCHOR	VT-1	NS	655-105
D1.20	1G41-H0415-WA	INTEGRAL ATTACHMENT ANCHOR	VT-1	NS	654-103
D1.20	1G41-H0425-WA	INTEGRAL ATTACHMENT ANCHOR	VT-1	3	654-102
D1.20	1G41-H0427-WA	INTEGRAL ATTACHMENT ANCHOR	VT-1	NS	655-116
D1.20	1G41-H0429-WA	INTEGRAL ATTACHMENT RIGID STRUT	VT-1	NS	651-102
D1.20	1G41-H0481-WA	INTEGRAL ATTACHMENT RIGID STRUT	VT-1	NS	654-105
D1.20	1G41-H5001-WA	INTEGRAL ATTACHMENT MECHANICAL SNUBBER	VT-1	NS	655-108
D1.20	1G42-H0005-WA	INTEGRAL ATTACHMENT RIGID GUIDE	VT-1	3	655-101
D1.20	1G42-H0010-WA	INTEGRAL ATTACHMENT MECHANICAL SNUBBER	VT-1	NS	655-101
D1.20	1G42-H0013-WA	INTEGRAL ATTACHMENT MECHANICAL SNUBBER	VT-1	NS	655-101

* These welded attachments are not scheduled for examination because they are filled with sealant or sealed with rubber boots.

		EXAMINATION CATEGORY: D-B			
D2.10	PR COMPONENTS	SYSTEM LEAKAGE TESTS	VT-2	1,2,3	

5.0 IWE/IWL (CLASS MC and CC) EXAMINATIONS

Class MC examination categories are identifiable by an 'E' as the first assigned letter and are as follows:

Examination Category	Examination Item No.[1] - Area (Examination Method)
E-A	Containment Surfaces:
	E1.11 - Accessible Surface Areas (VT-3M)
	E1.11BC- Containment Bolted Connections (VT-3)[2]
	E1.12 - Wetted Surface of Submerged Areas (VT-3)
E-C	Containment Surfaces Requiring Augmented Examination:
	E4.11 - Visible Surfaces (VT-1M)
	E4.12 - Surface Area Grid (Volumetric)

NOTES:
1. Only those Code item numbers that are applicable at PNPP.
2. A VT-1 Exam is required for bolted connections when flaws or degradation are identified.

Class CC examination categories are identifiable by an 'L' as the first assigned letter and are as follows:

Examination Category	Examination Item No.[1] - Area (Examination Method)
L-A	Concrete Surfaces:
	L1.11 - All Accessible Areas (VT-3C)
	L1.12 - Suspect Areas (VT-1C)
L-B	Unbonded Post Tensioning System (NOT APPLICABLE AT PNPP)

NOTES: 1. Only those Code item numbers that are applicable at PNPP.

GENERAL NOTE: Reference FCR 024929 for "IWE/IWL Inspection Boundary".

5.1 Exemptions

Per the provisions of Section XI, components may be exempt from specific examination requirements providing that they are within the exemption criteria. Listed below are the exemptions applicable to the ISEP.

1. The following components (or parts of components) are exempted from the examination requirements of IWE-2000:

   a. vessels, parts, and appurtenances that are outside the boundaries of the containment as defined in the Design Specifications;

   b. embedded or inaccessible portions of containment vessels, parts, and appurtenances that met the requirements of the original Construction Code;

c. portions of containment vessels, parts, and appurtenances that become embedded in concrete or become inaccessible as a result of vessel repair/replacement activities if the conditions of IWE-1232 and IWE-5220 are met;

d. piping, pumps, and valves that are part of the containment system, or which penetrate or are attached to the containment vessel. These components shall be examined in accordance with the rules of IWB or IWC, as appropriate to the classification defined by the Design Specifications.

2. The following components (or parts of components) may be exempted from the examination requirements of IWL-2000:

a. tendon end anchorages that are inaccessible, subject to the requirements of IWL-2521.1;

b. portions of the concrete surface that are covered by the liner, foundation material, or backfill, or are otherwise obstructed by adjacent structures, components, parts, or appurtenances.

5.2 Examination Selection Process

For Examination Categories E-A, E-C, and L-A ASME Section XI delineates criteria which are applied in selecting the areas to be examined.

1. E-A Containment Surfaces

The criteria for selecting containment surfaces are:

a. VT-3M examination of the accessible interior and exterior containment surfaces of Class MC Containment which include;
   - o integral attachments and structures that are parts of reinforcing structure, such as stiffening rings, manhole frames, and reinforcement around openings.
   - o surfaces of attachment welds between structural attachments and the pressure retaining boundary or reinforcing structure, except for nonstructural or temporary attachments as defined in NE-4435 and minor permanent attachments as defined in CC-4543.4 of ASME Section XI.

b. Pressure retaining bolted connections within the IWE boundary at least once per interval as required by 10CFR50.55a(b)(2)(ix)(G).

c. At least 80% of the pressure retaining boundary excluding attachments, structural reinforcement, and areas made inaccessible during construction.

d. Including 100% of accessible wetted surfaces of submerged areas that are necessary, at least once per interval.

2. E-C Containment Surfaces Requiring Augmented Examinations

The criteria for selecting the areas to be examined are:

a. Interior and exterior containment surface areas that are subject to accelerated corrosion with no or minimal corrosion allowance or areas where the absence or repeated loss of protective coatings has resulted in substantial corrosion and pitting. Typical locations of such areas are those exposed to standing water, repeated wetting and drying, persistent leakage, and those with geometries that permit water accumulation, condensation, and microbiological attack. Such areas may include penetration sleeves, surfaces wetted during refueling, concrete-to-steel shell or liner interfaces, embedment zones, leak chase channels, drain areas, or sump liners.

b. Interior and exterior containment surface areas that are subject to excessive wear from abrasion or erosion that causes a loss of protective coatings, deformation, or material loss. Typical locations of such areas are those subject to substantial traffic, sliding pads or supports, pins or clevises, shear lugs, seismic restraints, surfaces exposed to water jets from testing operation or safety relief valve discharges, and areas that experience wear from frequent vibrations.

3. L-A Concrete Surfaces

100% of the accessible concrete surface area in the Annulus shall be VT-3C visual examined for evidence of conditions indicative of damage or degradation each interval.

5.3 Successive Examinations (Reference IWE 2420)

The sequence of component exams established during the first inspection interval shall be repeated during each successive inspection interval, to the extent practical.

When examinations results require evaluation of flaws or areas of degradation in accordance with IWE-3000, and the component is evaluated as acceptable for continued service, the areas containing such flaws or areas of degradation shall have augmented examination under Category E-C and re-examined during the next inspection period listed in the ISEP.

When augmented examinations under Category E-C reveal flaws or areas of degradation which remain essentially unchanged for the next inspection period, these areas no longer require augmented examination under Category E-C and revert to the original schedule of successive exams.

5.4 Relief Requests

When compliance with Code examination requirements is not practical, relief from examinations is requested. There are currently no Inservice Relief Requests (IR) required for 3rd 10-Year ISI Interval for Subsections IWE and IWL.

5.5 Inservice Examination Table

This section contains the listing of all Class MC and CC areas subject to the examination requirements of ASME Section XI, Subsection IWE and IWL. This listing is for reference purposes only. The actual components scheduled for examinations are presented to management for approval at least 60 days prior to commencing a scheduled refueling outage.

The information presented in the tables are defined below:

(1) EXAMINATION CATEGORY - The basis for organizing areas subject to examination.

(2) ITEM NO. - A division within an examination category which separates the specific examination requirements.

(3) MARK NO. - A unique identification number assigned to each examination area.

(4) COMPONENT DESCRIPTION - A brief description used to identify the examination area. Within this description, the numbers inside parentheticals represent the percent of the containment surface area covered by that particular examination area as documented in Technical Assignment File 81872.

(5) EXAM METHOD - This abbreviation identifies the unique nondestructive examination method(s) required for the examination area. The abbreviations used in this listing are as follows:

- VT-1 - Visual examination (direct or remote) conducted to detect discontinuities and imperfections on the surfaces of components, including such conditions as cracks, wear, corrosion, or erosion
- VT-3 - Visual examination, which may be conducted remotely with or without optical aids, conducted to determine the general mechanical or structural condition of components and their supports by verifying parameters such as clearances, settings, and physical displacements; to detect discontinuities and imperfections, such as loss of integrity at bolted or welded connections, loose or missing parts, debris, corrosion, wear, or erosion; and to detect conditions that could affect operability or functional adequacy of snubbers and constant load and spring type supports. The examination must be capable of resolving, with or without optical aids, 0.105" lower case characters without ascenders or descenders (e.g., a, c, e, o)

- VT-3M - General visual examination of Metal Containment (Class MC) surfaces, performed either directly or remotely, by line of sight from available viewing angles from floors, platforms, walkways, ladders, or other permanent vantage points, to assess the general condition of containment surfaces. The examinations shall be performed with illumination sufficient to detect evidence of degradation. The examinations shall be performed by personnel who are qualified for visual examination (i.e., are certified VT-1 or VT-3 examiners, or qualified General Visual examiners).
- VT-3C - General visual examinations of Concrete Containment (Class CC) concrete surfaces conducted to determine the general structural condition of containments. The examination shall be performed in sufficient detail to identify areas of concrete deterioration and distress, such as defined in ACI 201.1 and ACI 349.3R. The visual examinations shall be performed directly or remotely, with adequate illumination, by personnel with visual acuity sufficient to detect evidence of degradation and who have been qualified for visual examination in accordance with IWA-2300 (i.e., are certified VT-1 and/or VT-3 examiners per NOP-CC-5708).
- VT-1M - Detailed visual examination of Metal Containment (Class MC) surfaces performed to determine the magnitude and extent of deterioration and distress of containment surfaces requiring augmented inspection in accordance with IWE-1241 or suspect containment surfaces initially detected by an IWE General Visual examination (VT-3M). The visual examinations shall be performed directly with adequate illumination, by personnel who have been qualified for visual examination in accordance with IWA-2300 (i.e., are certified VT-1), have a Class MC endorsement per NOP-CC-5708, and with visual acuity sufficient to resolve 0.044" lower case characters without ascenders or descenders (e.g., a, c, e, o).
- VT-1C - Detailed visual examination of Concrete Containment (Class CC) surfaces performed to determine the magnitude and extent of deterioration and distress of containment surfaces initially detected by an IWL General Visual examination (VT-3C). The visual examinations shall be performed directly with adequate illumination, by personnel who have been qualified for visual examination in accordance with IWA-2300 (i.e., are certified VT-1), with visual acuity sufficient to resolve 0.044" lower case characters without ascenders or descenders (e.g., a, c, e, o).
- UTT - Ultrasonic thickness examinations for suspect areas under augmented examination Category E-C.

(6) PERIOD SCHED. - This column identifies the inspection period during which the area is tentatively scheduled to receive examination. Normally there will be two refueling outages within each period. Scheduled examinations can be completed in either of the refueling outages as appropriate to facilitate other outage activities, but must be completed by the end of the period. The period scheduled can be 1, 2, 3, or any combination of these numbers. For those areas not scheduled for examination, the letters "NS" will be inserted in place of an inspection period. An asterisk(s) in the schedule column denotes a scheduling peculiarity that will be explained at the end of the applicable category. "SR" stands for a situational requirement and will be explained by a scheduling note.

ITEM NO.	MARK NO.	COMPONENT DESCRIPTION	EXAM METHOD	PERIOD SCHED.	ISI ISO SS-305-
		EXAMINATION CATEGORY: E-A			
E1.11	1T23-EXTERIOR				
E1.11	IT23-001-E	EXTERIOR EL 599-610 AZ 0-90 (2%)	VT-3M	1,2,3	503-123
E1.11	1T23-002-E	EXTERIOR EL 599-610 AZ 90-180 (2%)	VT-3M	1,2,3	503-124
E1.11	1T23-003-E	EXTERIOR EL 599-610 AZ 180-270 (2%)	VT-3M	1,2,3	503-125
E1.11	1T23-004-E	EXTERIOR EL 599-610 AZ 270-360 (2%)	VT-3M	1,2,3	503-126
E1.11	1T23-005-E	EXTERIOR EL 610-664 AZ 0-90 (9%)	VT-3M	1,2,3	503-127
E1.11	1T23-006-E	EXTERIOR EL 610-664 AZ 90-180 (7%)	VT-3M	1,2,3	503-128
E1.11	1T23-007-E	EXTERIOR EL 610-664 AZ 180-270 (9%)	VT-3M	1,2,3	503-129
E1.11	1T23-008-E	EXTERIOR EL 610-664 AZ 270-360 (7%)	VT-3M	1,2,3	503-130
E1.11	1T23-009-E	EXTERIOR EL 664-727 AZ 0-90 (9%)	VT-3M	1,2,3	503-133
E1.11	1T23-010-E	EXTERIOR EL 664-727 AZ 90-180 (9%)	VT-3M	1,2,3	503-134
E1.11	1T23-011-E	EXTERIOR EL 664-727 AZ 180-270 (9%)	VT-3M	1,2,3	503-135
E1.11	1T23-012-E	EXTERIOR EL 664-727 AZ 270-360 (9%)	VT-3M	1,2,3	503-136
E1.11	1T23-013-E	EXTERIOR DOME EL 727-757 (20%)	VT-3M	1,2,3	503-137
E1.11	1T23-014-E	EXTERIOR ANNULUS STEAM TUNNEL EL 616-649 (2%)	VT-3M	1,2,3	503-131
E1.11	1T23-015-E	EXTERIOR FUEL TRANSFER TUBE EL 620-652 (1%)	VT-3M	1,2,3	503-132
E1.11BC	1P53-A306-B	CTMT EQUIPMENT HATCH BOLTING	VT-3*	2	503-126
E1.11	1T23-INTERIOR	INTERIOR EL			
E1.11	1T23-005-I	INTERIOR EL 599-620 AZ 20-90 (2%)	VT-3	1,2,3	503-105
E1.11	1T23-006-I	INTERIOR EL 599-620 AZ 90-180 (3%)	VT-3	1,2,3	503-106
E1.11	1T23-007-I	INTERIOR EL 599-620 AZ 180-270 (3%)	VT-3	1,2,3	503-107
E1.11	1T23-008-I	INT EXCEPT STEAM TUNNEL EL 599-620 AZ 270-340 (2%)	VT-3	1,2,3	503-108
E1.11	1T23-009-I	INT EXCEPT FUEL TRNSFR EL 620-642 AZ 20-90 (2%)	VT-3	1,2,3	503-109
E1.11	1T23-010-I	INT EXCEPT FUEL STORAGE PIT EL 620-642 AZ 90-180 (2%)	VT-3	1,2,3	503-110
E1.11	1T23-011-I	INT EXCEPT FUEL TRNSFR EL 620-642 AZ 180-270 (3%)	VT-3	1,2,3	503-111
E1.11	1T23-012-I	INTERIOR EL 620-642 AZ 270-340 (2%)	VT-3	1,2,3	503-112
E1.11	1T23-013-I	INT EXCEPT ST & FILTER RM EL 642-690 AZ 0-90 (5%)	VT-3	1,2,3	503-113
E1.11	1T23-014-I	INT EXCEPT FUEL STOR PIT EL 642-690 AZ 90-180 (4%)	VT-3	1,2,3	503-114
E1.11	1T23-015-I	INTERIOR EL 642-690 AZ 180-270 (6%)	VT-3	1,2,3	503-115
E1.11	1T23-016-I	INT EXCEPT STEAM TUNNEL EL 642-690 AZ 270-360 (6%)	VT-3	1,2,3	503-116
E1.11	1T23-017-I	INT ABOVE POLAR CRANE EL 690-727 AZ 0-90 (4%)	VT-3	1,2,3	503-119

ITEM NO.	MARK NO.	COMPONENT DESCRIPTION	EXAM METHOD	PERIOD SCHED.	ISI ISO SS-305-
		EXAMINATION CATEGORY: E-A			
E1.11	1T23-018-I	INT ABOVE POLAR CRANE EL 690-727 AZ 90-180 (4%)	VT-3	1,2,3	503-120
E1.11	1T23-019-I	INT ABOVE POLAR CRANE EL 690-727 AZ 180-270 (4%)	VT-3	1,2,3	503-121
E1.11	1T23-020-I	INT ABOVE POLAR CRANE EL 690-727 AZ 270-360 (4%)	VT-3	1,2,3	503-122
E1.11	1T23-021-I	INTERIOR OF DOME EL 727-757 0-360 (19%)	VT-3	1,2,3	503-138
E1.11	1T23-022-I	CONTAINMENT STM TUNNEL EL 616-649 AZ 340-20 (2%)	VT-3	1,2,3	503-117
E1.11	1T23-023-I	FUEL TRANSFER TUBE EL 631-641 AZ 155-182 (<1%)	VT-3	1,2,3	503-118
E1.12	1T23-WETTED SURFACES OF SUBMERGED AREAS				
E1.12	IT23-001-I	SUPPRESSION POOL WALL EL 575-599 AZ 0-90	VT-3	3	503-101
E1.12	1T23-002-I	SUPPRESSION POOL WALL EL 575-599 AZ 90-180	VT-3	3	503-102
E1.12	1T23-003-I	SUPPRESSION POOL WALL EL 575-599 AZ 180-270	VT-3	3	503-103
E1.12	1T23-004-I	SUPPRESSION POOL WALL EL 575-599 AZ 270-360	VT-3	3	503-104
E1.20	NO BWR VENT SYSTEMS WIHTIN PNPP'S IWE BOUNDARY				
E1.30	NO MOISTURE BARRIERS WITHIN PNPP'S CONTAINMENT				

* VT-1 examination shall be performed for bolted connections when flaws or areas of degradation are identified.

GENERAL NOTE: IWE/IWL examinations may be performed along with Tech Spec Containment visual exams covered by ISI Instruction T23-T2400-5.

		EXAMINATION CATEGORY: E-C			
E4.11	NO AREAS IDENTIFIED		VT-1M	SR	
E4.12	NO AREAS IDENTIFIED		UTT	SR	
		EXAMINATION CATEGORY: L-A			
L1.11	1T23-016-E	ANNULUS CONCRETE SURFACE AZ 0-360	VT-3C	1,2*	503-139
L1.12	NO AREAS IDENTIFIED				

* In accordance with IWL-2510, the frequency of examination for concrete surfaces after 10 years of service is once every five years plus or minus one year.

6.0 IWF (CLASS 1, 2, 3 AND MC COMPONENT SUPPORT) EXAMINATIONS

Support Types

The examination requirements apply to the following:

1. piping supports;

2. supports other than piping supports.

Component support types are divided into the following functional groupings.

1. Anchors

2. Multi-Directional Rigid Guides

3. Single-Directional Rigid Guides

4. Rigid Rods/Supports

5. Mechanical/Hydraulic Snubbers

6. Variable & Constant Spring Supports

7. Single Directional Rigid Struts

8. Multi-Directional Rigid Struts

Component Support examination categories are identifiable by a 'F' as the first assigned letter and are as follows:

Examination Category	Examination Item No.[1] - Area (Examination Method)
F-A	Other-Than Piping Supports:
	F1.40 - Class 1, 2 and 3 vessel, heat exchanger, pump, etc. supports
F-A	Supports, Augmented:
	F1.50 - Augmented piping supports
F-A	Class 1 Piping Supports:
	F1.A - anchors
	F1.E - supports exempt from examination (i.e., inside penetration guard pipes)
	F1.G - multi-directional guides
	F1.Gs - single-directional guides
	F1.R - rigid rods/supports
	F1.SN - mechanical or hydraulic snubbers
	F1.SP - constant or variable spring supports
	F1.ST - single-directional rigid struts
	F1.STm - multi-directional rigid struts

Examination Category	Examination Item No.[1] - Area (Examination Method)

F-A Class 2 Piping Supports:

- F2.A - anchors
- F2.E - supports exempt from examination (i.e., inside penetration guard pipes)
- F2.G - multi-directional guides
- F2.Gs - single-directional guides
- F2.R - rigid rods/supports
- F2.SN - mechanical or hydraulic snubbers
- F2.SP - constant or variable spring supports
- F2.ST - single-directional rigid struts
- F2.STm - multi-directional rigid struts

F-A Class 3 Piping Supports:

- F3.A - anchors
- F3.G - multi-directional guides
- F3.Gs - single-directional guides
- F3.R - rigid rods/supports
- F3.SN - mechanical or hydraulic snubbers
- F3.SP - constant or variable spring supports
- F3.ST - single-directional rigid struts
- F3.STm - multi-directional rigid struts

F-A Supports, Class MC:
None at PNPP, Containment is Free-Standing

NOTE: 1. The item numbers above are not those identified in the Code. The types of supports are to be grouped by their support functions. Item numbers are not prescribed by the Code Case. The item numbers above were assigned to differentiate the groups and the rules of the Code applied individually to each item number.

6.1 Support Selection and Exemptions

Component supports exempt from examination are those connected to components and items exempted from examination under IWB-1220, IWC-1220, and IWD-1220. In addition, portions of supports that are inaccessible by being buried underground, encased in concrete, or encapsulated by guard pipe are also exempt.

Component supports to be examined shall be the supports of those components that are required to be examined under IWB-2500, IWC-2500 and IWD-2500 by volumetric, surface, or visual (VT-1 or VT-3) examination methods. Piping supports to be examined shall be the supports of piping not exempted under IWB-1220, IWC-1220, IWD-1220 and IWE-1220. Of these, 25% of the Class 1 piping, 15% of the Class 2 piping, 10% of the Class 3 piping, and 100% of the non-piping supports are selected (i.e., scheduled) for examination. For non-piping supports on multiple components of similar design, function, and service, the supports of only one of the multiple components are selected.

6.2 Additional Examinations

Component support examinations performed in accordance with Table IWF-2500-1 that reveal conditions exceeding the acceptance standards of IWF-3400 shall be extended to include the component supports immediately adjacent to those component supports for which corrective action is required.

The additional examinations shall be extended to include additional supports within the system, equal in number and of the same type and function as those scheduled for examination during the inspection period.

When the additional examinations required by IWF-2430(a) reveal flaws or relevant conditions exceeding the acceptance standards of IWF-3400, the examinations shall be further extended to include additional examinations during the current outage. These additional examinations shall include the remaining component supports within the system of the same type and function.

When the additional examinations required by IWF-2430(b) reveal flaws or relevant conditions exceeding the acceptance standards of IWF-3400, the examinations shall be extended to include all nonexempt supports potentially subject to the same failure modes that required corrective actions in accordance with IWF-2430(a) and (b). Also, these additional examinations shall include nonexempt component supports in other systems when the support failures requiring corrective actions indicate non-system-related support failure modes.

When the additional examinations required by IWF-2430(c) reveal flaws or relevant conditions exceeding the acceptance standards of IWF-3400, the Condition Report evaluator shall determine which of the exempt component supports could be affected by the same observed failure modes and could affect nonexempt components and schedule those for examination.

6.3 Successive Examinations

The sequence of component support examinations established in the first inspection interval shall be repeated in the successive inspection intervals, to the extent practical. As allowed by Code Case N-624, the sequence of examinations may be modified in a manner that optimizes scaffolding, radiological, insulation removal, or other considerations provided the Program B percentage requirements are met.

When a component support is accepted for continued service in accordance with IWF-3112.2 or IWF-3122.2, the component support shall be reexamined during the next inspection period listed in the ISEP.

When the examinations required by IWF-2420(b) do not require additional corrective measures during the next inspection period, the inspection schedule may revert to the requirements of IWF-2420(a).

6.4 Relief Requests

When compliance to Code examination requirements is not achievable, relief from examinations is requested. Currently for the 3rd 10-Year Interval , no Inservice Relief Requests (IR) have been filed with the NRC for components subject to the examination requirements of ASME Section XI, Article IWF.

6.5 Inservice Examination Table

This section contains the listing of all Class 1, 2, 3, and Augmented supports subject to the examination requirements of ASME Section XI. The actual supports scheduled for examinations at each outage are presented to management for approval at least 60 days prior to commencing a scheduled refueling outage.

The information presented in the tables are defined below:

1. EXAMINATION CATEGORY - A grouping of items to be examined or tested. All supports are Category F-A.

2. ITEM NO. - A division within an examination category which identifies the support types by support function.

3. MARK NO. - A unique identification number assigned to each pipe or component support.

4. COMPONENT DESCRIPTION - A brief description used to identify the type of support. If (WA) is included in the component description it indicates that the support has a "welded attachment" to the piping or component. Depending on the code class of the component the examination of the "WA" is covered in another section, i.e., B-K, C-C, and D-A for Class 1, 2, and 3 respectively.

5. EXAM METHOD - This abbreviation identifies the unique non-destructive examination method required for the pipe support or component support. All components in this category require a VT-3 examination.

6. PERIOD SCHED. - This column identifies the inspection period in which the weld or component is scheduled to be examined. The period scheduled can be either 1, 2, 3, or any combination of these numbers. Normally there will be 2 refueling outages within each period. Scheduled examinations can be completed in either of the refueling outages as appropriate to facilitate other outage activities, but must be completed by the end of the period. For those pipe supports or component supports not scheduled for examination, the letters "NS" will be inserted in place of an inspection period. An asterisk(s) in the schedule column denotes a scheduling peculiarity which will be explained at the end of the applicable category.

ITEM NO.	MARK NO.	COMPONENT DESCRIPTION	EXAM METHOD	PERIOD SCHED.	ISI ISO SS-305-
		EXAMINATION CATEGORY: F-A			
F3.STm	1B21-B0101A	RIGID STRUT (WA) MPL 1B21G7000	VT-3	NS	605-128
F3.STm	1B21-B0101B	RIGID STRUT (WA) MPL 1B21G7002	VT-3	1	605-112
F3.STm	1B21-B0101C	RIGID STRUT (WA) MPL 1B21G7003	VT-3	NS	605-122
F3.STm	1B21-B0101D	RIGID STRUT (WA) MPL 1B21G7004	VT-3	NS	605-116
F3.STm	1B21-B0102B	RIGID STRUT (WA) MPL 1B21G7005	VT-3	NS	605-120
F3.STm	1B21-B0102C	RIGID STRUT (WA) MPL 1B21G7006	VT-3	NS	605-127
F3.STm	1B21-B0103B	RIGID STRUT (WA) MPL 1B21G7007	VT-3	NS	605-121
F3.STm	1B21-B0103C	RIGID STRUT (WA) MPL 1B21G7001	VT-3	NS	605-125
F1.G	1B21-G101A	RIGID GUIDE (WA) MPL 1B21G7030	VT-3	2	605-101
F1.G	1B21-G101B	RIGID GUIDE (WA) MPL 1B21G7031	VT-3	NS	605-102
F1.G	1B21-G101C	RIGID GUIDE (WA) MPL 1B21G7032	VT-3	NS	605-103
F1.G	1B21-G101D	RIGID GUIDE (WA) MPL 1B21G7033	VT-3	3	605-104
F1.E	1B21-G102A	RIGID GUIDE (INSIDE PENETRATION GUARD PIPE)	VT-3	NS	605-107
F1.E	1B21-G102B	RIGID GUIDE (INSIDE PENETRATION GUARD PIPE)	VT-3	NS	605-108
F1.E	1B21-G102C	RIGID GUIDE (INSIDE PENETRATION GUARD PIPE)	VT-3	NS	605-109
F1.E	1B21-G102D	RIGID GUIDE (INSIDE PENETRATION GUARD PIPE)	VT-3	NS	605-110
F3.A	1B21-H0001	ANCHOR (WA)	VT-3	NS	605-128
F3.SN	1B21-H0002	MECHANICAL SNUBBER	VT-3	NS	605-128
F3.SN	1B21-H0004	MECHANICAL SNUBBER	VT-3	3	605-128
F3.SN	1B21-H0005	MECHANICAL SNUBBER	VT-3	NS	605-128
F3.SN	1B21-H0006	MECHANICAL SNUBBER (WA)	VT-3	NS	605-128
F3.SN	1B21-H0007	MECHANICAL SNUBBER (WA) (TANDEM)	VT-3	NS	605-128
F3.SP	1B21-H0008	VARIABLE SPRING	VT-3	NS	605-127
F3.SN	1B21-H0009	MECHANICAL SNUBBER (TANDEM)	VT-3	NS	605-127
F3.SN	1B21-H0010	MECHANICAL SNUBBER (WA) (TANDEM)	VT-3	NS	605-127
F3.A	1B21-H0011	ANCHOR (WA)	VT-3	NS	605-127
F3.SN	1B21-H0012	MECHANICAL SNUBBER	VT-3	NS	605-127
F3.SN	1B21-H0013	MECHANICAL SNUBBER (WA)	VT-3	NS	605-127
F3.SN	1B21-H0014	MECHANICAL SNUBBER	VT-3	NS	605-127
F3.SN	1B21-H0015	MECHANICAL SNUBBER	VT-3	NS	605-113
F3.A	1B21-H0016	ANCHOR (WA)	VT-3	NS	605-125
F3.SN	1B21-H0020	MECHANICAL SNUBBER (WA) (TANDEM)	VT-3	2	605-125
F3.SN	1B21-H0021	MECHANICAL SNUBBER (WA)	VT-3	NS	605-125
F3.SN	1B21-H0022	MECHANICAL SNUBBER	VT-3	NS	605-125
F3.SN	1B21-H0023	MECHANICAL SNUBBER (WA)	VT-3	NS	605-125
F3.SN	1B21-H0024	MECHANICAL SNUBBER	VT-3	NS	605-125
F3.SN	1B21-H0025	MECHANICAL SNUBBER (WA) (TANDEM)	VT-3	NS	605-113
F3.A	1B21-H0026	ANCHOR (WA)	VT-3	NS	605-121
F3.SN	1B21-H0029	MECHANICAL SNUBBER (WA) (TANDEM)	VT-3	NS	605-121

ITEM NO.	MARK NO.	COMPONENT DESCRIPTION	EXAM METHOD	PERIOD SCHED.	ISI ISO SS-305-
		EXAMINATION CATEGORY: F-A			
F3.SN	1B21-H0031	MECHANICAL SNUBBER (WA)	VT-3	NS	605-121
F3.SN	1B21-H0032	MECHANICAL SNUBBER	VT-3	NS	605-121
F3.SN	1B21-H0033	MECHANICAL SNUBBER	VT-3	NS	605-121
F3.SP	1B21-H0034	VARIABLE SPRING	VT-3	NS	605-113
F3.A	1B21-H0035	ANCHOR (WA)	VT-3	NS	605-120
F3.SP	1B21-H0036	VARIABLE SPRING	VT-3	NS	605-120
F3.ST	1B21-H0038	RIGID STRUT	VT-3	NS	605-120
F3.SN	1B21-H0039	MECHANICAL SNUBBER	VT-3	NS	605-120
F3.SN	1B21-H0040	MECHANICAL SNUBBER	VT-3	NS	605-120
F3.SN	1B21-H0041	MECHANICAL SNUBBER	VT-3	NS	605-120
F3.SN	1B21-H0042	MECHANICAL SNUBBER (WA) (TANDEM)	VT-3	1	605-120
F3.SN	1B21-H0043	MECHANICAL SNUBBER	VT-3	NS	605-115
F3.A	1B21-H0044	ANCHOR (WA)	VT-3	NS	605-115
F3.SN	1B21-H0045	MECHANICAL SNUBBER (WA)	VT-3	NS	605-115
F3.SN	1B21-H0046	MECHANICAL SNUBBER	VT-3	NS	605-115
F3.SN	1B21-H0047	MECHANICAL SNUBBER (WA)	VT-3	NS	605-115
F3.SN	1B21-H0048	MECHANICAL SNUBBER	VT-3	NS	605-115
F3.SN	1B21-H0049	MECHANICAL SNUBBER (WA) (TANDEM)	VT-3	2	605-115
F3.G	1B21-H0050	RIGID GUIDE (WA)	VT-3	NS**	605-115
F3.SN	1B21-H0051	MECHANICAL SNUBBER (TANDEM)	VT-3	NS	605-113
F3.A	1B21-H0052	ANCHOR (WA)	VT-3	NS	605-130
F3.SP	1B21-H0053	VARIABLE SPRING (WA)	VT-3	3	605-130
F3.SN	1B21-H0054	MECHANICAL SNUBBER (WA) (TANDEM)	VT-3	NS	605-130
F3.SN	1B21-H0056	MECHANICAL SNUBBER (WA)	VT-3	NS	605-130
F3.SN	1B21-H0057	MECHANICAL SNUBBER (WA)	VT-3	NS	605-130
F3.SN	1B21-H0058	MECHANICAL SNUBBER	VT-3	NS	605-130
F3.SN	1B21-H0059	MECHANICAL SNUBBER	VT-3	NS	605-130
F3.SN	1B21-H0060	MECHANICAL SNUBBER	VT-3	NS	605-113
F3.A	1B21-H0061	ANCHOR (WA)	VT-3	NS	605-117
F3.SP	1B21-H0062	VARIABLE SPRING	VT-3	NS	605-117
F3.SN	1B21-H0063	MECHANICAL SNUBBER (WA) (TANDEM)	VT-3	NS	605-117
F3.SN	1B21-H0064	MECHANICAL SNUBBER	VT-3	NS	605-117
F3.SN	1B21-H0065	MECHANICAL SNUBBER (WA) (TANDEM)	VT-3	NS	605-117
F3.SN	1B21-H0066	MECHANICAL SNUBBER	VT-3	NS	605-117
F3.ST	1B21-H0067	RIGID STRUT	VT-3	NS	605-117
F3.SN	1B21-H0068	MECHANICAL SNUBBER	VT-3	NS	605-117
F3.SN	1B21-H0069	MECHANICAL SNUBBER (WA) (TANDEM)	VT-3	NS	605-113
F3.A	1B21-H0070	ANCHOR (WA)	VT-3	NS	605-116
F3.SN	1B21-H0071	MECHANICAL SNUBBER	VT-3	NS	605-116
F3.SP	1B21-H0072	VARIABLE SPRING	VT-3	NS	605-116

ITEM NO.	MARK NO.	COMPONENT DESCRIPTION	EXAM METHOD	PERIOD SCHED.	ISI ISO SS-305-
		EXAMINATION CATEGORY: F-A			
F3.SN	1B21-H0073	MECHANICAL SNUBBER (WA)	VT-3	NS	605-116
F3.SN	1B21-H0074	MECHANICAL SNUBBER (WA) (TANDEM)	VT-3	3	605-116
F3.SN	1B21-H0075	MECHANICAL SNUBBER	VT-3	NS	605-116
F3.SN	1B21-H0076	MECHANICAL SNUBBER	VT-3	NS	605-116
F3.SN	1B21-H0077	MECHANICAL SNUBBER	VT-3	NS	605-116
F3.SN	1B21-H0078	MECHANICAL SNUBBER	VT-3	NS	605-116
F3.SN	1B21-H0079	MECHANICAL SNUBBER (WA)	VT-3	NS	605-116
F3.A	1B21-H0080	ANCHOR (WA)	VT-3	NS	605-118
F3.SN	1B21-H0082	MECHANICAL SNUBBER	VT-3	NS	605-118
F3.SN	1B21-H0084	MECHANICAL SNUBBER (WA)	VT-3	2	605-118
F3.SN	1B21-H0085	MECHANICAL SNUBBER	VT-3	NS	605-118
F3.SN	1B21-H0086	MECHANICAL SNUBBER (WA) (TANDEM)	VT-3	NS	605-118
F3.SN	1B21-H0087	MECHANICAL SNUBBER (WA) (TANDEM)	VT-3	NS	605-113
F3.A	1B21-H0088	ANCHOR (WA)	VT-3	1	605-114
F3.SN	1B21-H0089	MECHANICAL SNUBBER	VT-3	NS	605-114
F3.A	1B21-H0090	ANCHOR (WA)	VT-3	NS	605-113
F3.SN	1B21-H0091	MECHANICAL SNUBBER	VT-3	NS	605-114
F3.SN	1B21-H0092	MECHANICAL SNUBBER (WA) (TANDEM)	VT-3	NS	605-114
F3.SP	1B21-H0093	VARIABLE SPRING	VT-3	NS	605-114
F3.SN	1B21-H0094	MECHANICAL SNUBBER	VT-3	NS	605-114
F3.SN	1B21-H0095	MECHANICAL SNUBBER (WA) (TANDEM)	VT-3	NS	605-114
F3.SN	1B21-H0096	MECHANICAL SNUBBER	VT-3	NS	605-114
F3.A	1B21-H0097	ANCHOR (WA)	VT-3	NS	605-123
F3.SN	1B21-H0098	MECHANICAL SNUBBER (WA) (TANDEM)	VT-3	NS	605-123
F3.SP	1B21-H0099	VARIABLE SPRING (TANDEM)	VT-3	NS	605-123
F3.SN	1B21-H0100	MECHANICAL SNUBBER	VT-3	NS	605-123
F3.SN	1B21-H0101	MECHANICAL SNUBBER	VT-3	NS	605-130
F1.SP	1B21-H101A(A)	VARIABLE SPRING MPL 1B21G7050A	VT-3	NS	605-101
F1.SP	1B21-H101A(B)	VARIABLE SPRING MPL 1B21G7094	VT-3	NS	605-101
F1.SP	1B21-H101B(A)	VARIABLE SPRING MPL 1B21G7052	VT-3	NS	605-102
F1.SP	1B21-H101B(B)	VARIABLE SPRING MPL 1B21G7053	VT-3	NS	605-102
F1.SP	1B21-H101C(A)	VARIABLE SPRING MPL 1B21G7054	VT-3	NS	605-103
F1.SP	1B21-H101C(B)	VARIABLE SPRING MPL 1B21G7055	VT-3	NS	605-103
F1.SP	1B21-H101D(A)	VARIABLE SPRING MPL 1B21G7056	VT-3	3	605-104
F1.SP	1B21-H101D(B)	VARIABLE SPRING MPL 1B21G7057	VT-3	3	605-104
F3.SN	1B21-H0102	MECHANICAL SNUBBER	VT-3	NS	605-123
F1.SP	1B21-H0102B	VARIABLE SPRING MPL 1B21H7051	VT-3	2	605-102
F1.SP	1B21-H0102C	VARIABLE SPRING MPL 1B21H7059	VT-3	NS	605-103
F3.SN	1B21-H0103	MECHANICAL SNUBBER	VT-3	NS	605-123

ITEM NO.	MARK NO.	COMPONENT DESCRIPTION	EXAM METHOD	PERIOD SCHED.	ISI ISO SS-305-
		EXAMINATION CATEGORY: F-A			
F3.SP	1B21-H0104	VARIABLE SPRING (TANDEM)	VT-3	NS	605-123
F3.A	1B21-H0105	ANCHOR (WA)	VT-3	NS	605-124
F3.SN	1B21-H0106	MECHANICAL SNUBBER (WA) (TANDEM)	VT-3	NS	605-123
F3.SN	1B21-H0107	MECHANICAL SNUBBER (WA) (TANDEM)	VT-3	1	605-123
F3.SN	1B21-H0108	MECHANICAL SNUBBER	VT-3	NS	605-124
F3.A	1B21-H0109	ANCHOR (WA)	VT-3	NS	605-122
F3.ST	1B21-H0110	RIGID STRUT	VT-3	NS	605-122
F3.ST	1B21-H0111	RIGID STRUT	VT-3	NS	605-122
F3.SN	1B21-H0112	MECHANICAL SNUBBER	VT-3	NS	605-117
F3.SN	1B21-H0113	MECHANICAL SNUBBER	VT-3	NS	605-122
F3.SN	1B21-H0114	MECHANICAL SNUBBER	VT-3	NS	605-122
F3.SN	1B21-H0115	MECHANICAL SNUBBER (WA)	VT-3	NS	605-122
F3.SP	1B21-H0116	VARIABLE SPRING (WA)	VT-3	NS	605-122
F3.SN	1B21-H0117	MECHANICAL SNUBBER (WA) (TANDEM)	VT-3	NS	605-122
F3.SN	1B21-H0118	MECHANICAL SNUBBER (TANDEM)	VT-3	NS	605-122
F3.SN	1B21-H0119	MECHANICAL SNUBBER (WA) (TANDEM)	VT-3	3	605-122
F3.G	1B21-H0120	RIGID GUIDE (WA)	VT-3	NS**	605-114
F3.A	1B21-H0121	ANCHOR (WA)	VT-3	2	605-129
F3.SN	1B21-H0122	MECHANICAL SNUBBER (WA)	VT-3	NS	605-129
F3.SN	1B21-H0124	MECHANICAL SNUBBER	VT-3	NS	605-129
F3.SN	1B21-H0125	MECHANICAL SNUBBER (WA)	VT-3	NS	605-129
F3.SN	1B21-H0126	MECHANICAL SNUBBER	VT-3	2	605-129
F3.SN	1B21-H0127	MECHANICAL SNUBBER (WA) (TANDEM)	VT-3	NS	605-129
F3.G	1B21-H0128	RIGID GUIDE (WA)	VT-3	NS**	605-129
F3.SN	1B21-H0129	MECHANICAL SNUBBER (WA)	VT-3	NS	605-119
F3.SN	1B21-H0130	MECHANICAL SNUBBER	VT-3	NS	605-124
F3.SP	1B21-H0132	VARIABLE SPRING (WA)	VT-3	NS	605-124
F3.SN	1B21-H0133	MECHANICAL SNUBBER (WA)	VT-3	NS	605-127
F3.Gs	1B21-H0134	RIGID GUIDE (WA)	VT-3	1	605-127
F3.SN	1B21-H0135	MECHANICAL SNUBBER (WA) (TANDEM)	VT-3	NS	605-127
F3.SP	1B21-H0136	VARIABLE SPRING	VT-3	NS	605-126
F3.SN	1B21-H0138	MECHANICAL SNUBBER (WA)	VT-3	NS	605-126
F3.SN	1B21-H0139	MECHANICAL SNUBBER	VT-3	NS	605-126
F3.SN	1B21-H0140	MECHANICAL SNUBBER (WA) (TANDEM)	VT-3	NS	605-126
F3.SN	1B21-H0141	MECHANICAL SNUBBER (WA) (TANDEM)	VT-3	NS	605-126
F3.A	1B21-H0142	ANCHOR (WA)	VT-3	NS	605-112
F3.SN	1B21-H0143	MECHANICAL SNUBBER (WA)	VT-3	NS	605-124
F3.SP	1B21-H0144	VARIABLE SPRING	VT-3	NS	605-112
F3.SN	1B21-H0145	MECHANICAL SNUBBER	VT-3	NS	605-112
F3.SN	1B21-H0146	MECHANICAL SNUBBER	VT-3	NS	605-112

ITEM NO.	MARK NO.	COMPONENT DESCRIPTION	EXAM METHOD	PERIOD SCHED.	ISI ISO SS-305-
		EXAMINATION CATEGORY: F-A			
F3.SN	1B21-H0147	MECHANICAL SNUBBER (WA)	VT-3	NS	605-124
F3.SN	1B21-H0148	MECHANICAL SNUBBER	VT-3	NS	605-112
F3.SP	1B21-H0149	VARIABLE SPRING (WA)	VT-3	NS	605-112
F3.SN	1B21-H0150	MECHANICAL SNUBBER (WA) (TANDEM)	VT-3	NS	605-112
F3.SN	1B21-H0151	MECHANICAL SNUBBER (WA) (TANDEM)	VT-3	NS	605-112
F3.SN	1B21-H0152	MECHANICAL SNUBBER	VT-3	NS	605-112
F3.SN	1B21-H0153	MECHANICAL SNUBBER (WA) (TANDEM)	VT-3	NS	605-112
F3.SN	1B21-H0154	MECHANICAL SNUBBER (WA) (TANDEM)	VT-3	NS	605-112
F3.G	1B21-H0155	RIGID GUIDE (WA)	VT-3	NS**	605-112
F3.G	1B21-H0156	RIGID GUIDE (WA)	VT-3	NS**	605-128
F3.G	1B21-H0157	RIGID GUIDE (WA)	VT-3	NS**	605-127
F3.G	1B21-H0158	RIGID GUIDE (WA)	VT-3	NS**	605-125
F3.G	1B21-H0159	RIGID GUIDE (WA)	VT-3	NS**	605-121
F3.G	1B21-H0160	RIGID GUIDE (WA)	VT-3	NS**	605-120
F3.ST	1B21-H0161	RIGID STRUT (WA)	VT-3	3	605-124
F3.SN	1B21-H0162	MECHANICAL SNUBBER (WA) (TANDEM)	VT-3	NS	605-124
F3.G	1B21-H0163	RIGID GUIDE (WA)	VT-3	NS**	605-117
F3.G	1B21-H0164	RIGID GUIDE (WA)	VT-3	NS**	605-116
F3.SN	1B21-H0165	MECHANICAL SNUBBER (WA)	VT-3	NS	605-121
F3.SN	1B21-H0166	MECHANICAL SNUBBER (WA)	VT-3	NS	605-114
F3.G	1B21-H0167	RIGID GUIDE (WA)	VT-3	NS**	605-126
F3.G	1B21-H0168	RIGID GUIDE (WA)	VT-3	NS**	605-113
F3.ST	1B21-H0169	RIGID STRUT	VT-3	NS	605-121
F3.SN	1B21-H0170	MECHANICAL SNUBBER (WA) (TANDEM)	VT-3	NS	605-124
F3.A	1B21-H0171	ANCHOR (WA)	VT-3	NS	605-126
F3.ST	1B21-H0172	RIGID STRUT	VT-3	NS	605-117
F3.G	1B21-H0173	RIGID GUIDE (WA)	VT-3	NS**	605-123
F3.SN	1B21-H0174	MECHANICAL SNUBBER (WA) (TANDEM)	VT-3	NS	605-122
F3.G	1B21-H0175	RIGID GUIDE (WA)	VT-3	NS**	605-122
F3.G	1B21-H0176	RIGID GUIDE (WA)	VT-3	NS**	605-130
F3.G	1B21-H0177	RIGID GUIDE (WA)	VT-3	NS**	605-118
F3.SN	1B21-H0178	MECHANICAL SNUBBER (WA) (TANDEM)	VT-3	NS	605-120
F3.G	1B21-H0179	RIGID GUIDE (WA)	VT-3	NS**	605-124
F3.A	1B21-H0180	ANCHOR (WA)	VT-3	NS	605-119
F3.SN	1B21-H0181	MECHANICAL SNUBBER (WA) (TANDEM)	VT-3	1	605-119
F3.SN	1B21-H0183	MECHANICAL SNUBBER	VT-3	NS	605-119
F3.SN	1B21-H0184	MECHANICAL SNUBBER	VT-3	NS	605-119
F3.SN	1B21-H0185	MECHANICAL SNUBBER	VT-3	NS	605-119
F3.G	1B21-H0186	RIGID GUIDE (WA)	VT-3	NS	605-119

ITEM NO.	MARK NO.	COMPONENT DESCRIPTION	EXAM METHOD	PERIOD SCHED.	ISI ISO SS-305-
		EXAMINATION CATEGORY: F-A			
F3.SN	1B21-H0187	MECHANICAL SNUBBER (WA) (TANDEM)	VT-3	NS	605-120
F3.ST	1B21-H0188	RIGID STRUT	VT-3	NS	605-120
F3.SN	1B21-H0191	MECHANICAL SNUBBER (WA)	VT-3	NS	605-118
F3.G	1B21-H0192	RIGID GUIDE (WA)	VT-3	NS**	605-118
F3.ST	1B21-H0201	RIGID STRUT	VT-3	NS	605-121
F3.Gs	1B21-H0202	RIGID GUIDE	VT-3	NS	605-121
F3.STm	1B21-H0203	RIGID STRUT (WA) (TANDEM)	VT-3	NS	605-116
F3.STm	1B21-H0204	RIGID STRUT (WA) (TANDEM)	VT-3	NS	605-130
F3.STm	1B21-H0205	RIGID STRUT (WA) (TANDEM)	VT-3	NS	605-129
F3.STm	1B21-H0206	RIGID STRUT (WA) (TANDEM)	VT-3	NS	605-128
F3.STm	1B21-H0207	RIGID STRUT (WA) (TANDEM)	VT-3	NS	605-127
F3.STm	1B21-H0208	RIGID STRUT (WA) (TANDEM)	VT-3	NS	605-125
F3.STm	1B21-H0209	RIGID STRUT (WA) (TANDEM)	VT-3	NS	605-124
F3.STm	1B21-H0210	RIGID STRUT (WA) (TANDEM)	VT-3	NS	605-126
F3.STm	1B21-H0211	RIGID STRUT (WA) (TANDEM)	VT-3	NS	605-123
F3.STm	1B21-H0212	RIGID STRUT (WA) (TANDEM)	VT-3	NS	605-122
F3.STm	1B21-H0213	RIGID STRUT (WA) (TANDEM)	VT-3	NS	605-112
F3.STm	1B21-H0214	RIGID STRUT (WA) (TANDEM)	VT-3	NS	605-113
F3.STm	1B21-H0215	RIGID STRUT (WA) (TANDEM)	VT-3	NS	605-114
F3.STm	1B21-H0216	RIGID STRUT (WA) (TANDEM)	VT-3	NS	605-115
F3.STm	1B21-H0217	RIGID STRUT (WA) (TANDEM)	VT-3	NS	605-121
F3.STm	1B21-H0218	RIGID STRUT (WA) (TANDEM)	VT-3	NS	605-120
F3.STm	1B21-H0219	RIGID STRUT (WA) (TANDEM)	VT-3	NS	605-119
F3.STm	1B21-H0220	RIGID STRUT (WA) (TANDEM)	VT-3	2	605-118
F3.STm	1B21-H0221	RIGID STRUT (WA) (TANDEM)	VT-3	NS	605-117
F3.SN	1B21-H0222	MECHANICAL SNUBBER (WA) (TANDEM)	VT-3	NS	605-119
F3.ST	1B21-H0406	RIGID STRUT	VT-3	NS	605-125
F3.ST	1B21-H0407	RIGID STRUT	VT-3	NS	605-125
F3.SN	1B21-H0408	MECHANICAL SNUBBER	VT-3	NS	605-125
F3.SP	1B21-H0409	VARIABLE SPRING (WA)	VT-3	NS	605-125
F3.SN	1B21-H0410	MECHANICAL SNUBBER	VT-3	NS	605-125
F3.Gs	1B21-H0411	RIGID GUIDE	VT-3	NS	605-125
F3.SN	1B21-H0412	MECHANICAL SNUBBER (WA)	VT-3	NS	605-121
F3.SP	1B21-H0413	VARIABLE SPRING (WA)	VT-3	NS	605-121
F3.Gs	1B21-H0414	RIGID GUIDE	VT-3	2	605-121
F3.ST	1B21-H0415	RIGID STRUT	VT-3	NS	605-121
F3.SP	1B21-H0416	VARIABLE SPRING (WA)	VT-3	1	605-115
F3.SP	1B21-H0419	VARIABLE SPRING (WA)	VT-3	NS	605-118
F3.SP	1B21-H0420	VARIABLE SPRING (WA)	VT-3	NS	605-112

ITEM NO.	MARK NO.	COMPONENT DESCRIPTION	EXAM METHOD	PERIOD SCHED.	ISI ISO SS-305-
		EXAMINATION CATEGORY: F-A			
F3.SN	1B21-H0421	MECHANICAL SNUBBER	VT-3	NS	605-112
F3.SN	1B21-H0423	MECHANICAL SNUBBER	VT-3	3	605-112
F3.SP	1B21-H0424	VARIABLE SPRING	VT-3	NS	605-126
F3.SP	1B21-H0425	VARIABLE SPRING	VT-3	NS	605-122
F3.SN	1B21-H0427	MECHANICAL SNUBBER	VT-3	NS	605-126
F3.SP	1B21-H0428	VARIABLE SPRING (WA)	VT-3	NS	605-113
F3.SP	1B21-H0429	VARIABLE SPRING	VT-3	NS	605-130
F3.SP	1B21-H0433	VARIABLE SPRING (WA)	VT-3	NS	605-129
F3.ST	1B21-H0436	RIGID STRUT	VT-3	NS	605-117
F3.SP	1B21-H0437	VARIABLE SPRING (WA)	VT-3	NS	605-128
F3.SP	1B21-H0438	VARIABLE SPRING	VT-3	NS	605-128
F3.SP	1B21-H0439	VARIABLE SPRING (WA)	VT-3	NS	605-117
F1.G	1B21-H0441	RIGID GUIDE	VT-3	NS	605-105
F1.SP	1B21-H0442	VARIABLE SPRING (WA < .625")	VT-3	NS	605-105
F1.G	1B21-H0443	RIGID GUIDE	VT-3	NS	605-105
F1.G	1B21-H0444	RIGID GUIDE	VT-3	NS	605-106
F1.SN	1B21-H0445	HYDRAULIC SNUBBER	VT-3	NS	605-106
F1.SN	1B21-H0446	HYDRAULIC SNUBBER (WA < .625") (TANDEM)	VT-3	NS	605-106
F1.SN	1B21-H0447	HYDRAULIC SNUBBER	VT-3	NS	605-106
F1.SP	1B21-H0448	VARIABLE SPRING	VT-3	1	605-106
F1.SN	1B21-H0449	HYDRAULIC SNUBBER	VT-3	NS	605-106
F1.SN	1B21-H0450	HYDRAULIC SNUBBER	VT-3	2	605-106
F1.SP	1B21-H0451	VARIABLE SPRING	VT-3	NS	605-106
F1.SN	1B21-H0452	HYDRAULIC SNUBBER	VT-3	NS	605-106
F1.SN	1B21-H0453	HYDRAULIC SNUBBER	VT-3	NS	605-106
F1.SP	1B21-H0454	VARIABLE SPRING	VT-3	NS	605-106
F1.SN	1B21-H0458	MECHANICAL SNUBBER	VT-3	NS	605-106
F1.SN	1B21-H0459	MECHANICAL SNUBBER	VT-3	1	605-106
F1.SN	1B21-H0462	HYDRAULIC SNUBBER	VT-3	NS	605-106
F1.SN	1B21-H0471	HYDRAULIC SNUBBER	VT-3	NS	605-106
F1.SN	1B21-H0472	HYDRAULIC SNUBBER	VT-3	NS	605-106
F1.SN	1B21-H0474	MECHANICAL SNUBBER	VT-3	NS	605-106
F1.SP	1B21-H0475	VARIABLE SPRING	VT-3	NS	605-106
F1.R	1B21-H0486	RIGID SUPPORT	VT-3	NS	605-105
F1.G	1B21-H0489	RIGID GUIDE	VT-3	3	605-105
F1.SN	1B21-H0490	HYDRAULIC SNUBBER	VT-3	NS	605-106
F1.SN	1B21-H0491	HYDRAULIC SNUBBER	VT-3	NS	605-106
F1.G	1B21-H0492	RIGID GUIDE	VT-3	NS	605-105
F1.G	1B21-H0493	RIGID GUIDE (WA < .625")	VT-3	NS	605-105

ITEM NO.	MARK NO.	COMPONENT DESCRIPTION	EXAM METHOD	PERIOD SCHED.	ISI ISO SS-305-
		EXAMINATION CATEGORY: F-A			
F3.Gs	1B21-H5000	RIGID GUIDE	VT-3	1	605-125
F3.SP	1B21-H5001	VARIABLE SPRING	VT-3	NS	605-125
F3.A	1B21-QUE-01-SP	ANCHOR FOR QUENCHER FOR SRV F041A (WA)	VT-3	NS	605-128
F3.A	1B21-QUE-02-SP	ANCHOR FOR QUENCHER FOR SRV F041B (WA)	VT-3	NS	605-113
F3.A	1B21-QUE-03-SP	ANCHOR FOR QUENCHER FOR SRV F041C (WA)	VT-3	NS	605-122
F3.A	1B21-QUE-04-SP	ANCHOR FOR QUENCHER FOR SRV F041D (WA)	VT-3	2	605-118
F3.A	1B21-QUE-05-SP	ANCHOR FOR QUENCHER FOR SRV F041E (WA)	VT-3	NS	605-130
F3.A	1B21-QUE-06-SP	ANCHOR FOR QUENCHER FOR SRV F041F (WA)	VT-3	NS	605-115
F3.A	1B21-QUE-07-SP	ANCHOR FOR QUENCHER FOR SRV F041G (WA)	VT-3	NS	605-125
F3.A	1B21-QUE-08-SP	ANCHOR FOR QUENCHER FOR SRV F041K (WA)	VT-3	NS	605-120
F3.A	1B21-QUE-09-SP	ANCHOR FOR QUENCHER FOR SRV F047B (WA)	VT-3	NS	605-112
F3.A	1B21-QUE-10-SP	ANCHOR FOR QUENCHER FOR SRV F047C (WA)	VT-3	NS	605-126
F3.A	1B21-QUE-11-SP	ANCHOR FOR QUENCHER FOR SRV F047D (WA)	VT-3	NS	605-119
F3.A	1B21-QUE-12-SP	ANCHOR FOR QUENCHER FOR SRV F047F (WA)	VT-3	NS	605-121
F3.A	1B21-QUE-13-SP	ANCHOR FOR QUENCHER FOR SRV F047G (WA)	VT-3	NS	605-127
F3.A	1B21-QUE-14-SP	ANCHOR FOR QUENCHER FOR SRV F047H (WA)	VT-3	NS	605-117
F3.A	1B21-QUE-15-SP	ANCHOR FOR QUENCHER FOR SRV F051A (WA)	VT-3	NS	605-129
F3.A	1B21-QUE-16-SP	ANCHOR FOR QUENCHER FOR SRV F051B (WA)	VT-3	NS	605-114
F3.A	1B21-QUE-17-SP	ANCHOR FOR QUENCHER FOR SRV F051C (WA)	VT-3	NS	605-123
F3.A	1B21-QUE-18-SP	ANCHOR FOR QUENCHER FOR SRV F051D (WA)	VT-3	NS	605-116
F3.A	1B21-QUE-19-SP	ANCHOR FOR QUENCHER FOR SRV F051G (WA)	VT-3	NS	605-124
F1.SN	1B21-S101B	HYDRAULIC SNUBBER MPL 1B21G7070	VT-3	2	605-102
F1.SN	1B21-S101C	HYDRAULIC SNUBBER MPL 1B21G7071	VT-3	NS	605-103
F1.SN	1B21-S102A	HYDRAULIC SNUBBER MPL 1B21G7072	VT-3	3	605-101
F1.SN	1B21-S102B	HYDRAULIC SNUBBER MPL 1B21G7073	VT-3	NS	605-102
F1.SN	1B21-S102C	HYDRAULIC SNUBBER MPL 1B21G7074	VT-3	1	605-103
F1.ST	1B21-RS102D	RIGID STRUT MPL 1B21G7075	VT-3	NS	605-104
F1.SN	1B21-S103A	HYDRAULIC SNUBBER MPL 1B21G7076	VT-3	NS	605-101
F1.SN	1B21-S104A	HYDRAULIC SNUBBER MPL 1B21G7080	VT-3	NS	605-101
F1.SN	1B21-S104D	HYDRAULIC SNUBBER MPL 1B21G7083	VT-3	3	605-104
F1.ST	1B21-RS105A	RIGID STRUT MPL 1B21G7084	VT-3	1	605-101
F1.SN	1B21-S105B	HYDRAULIC SNUBBER MPL 1B21G7085	VT-3	NS	605-102
F1.SN	1B21-S105C	HYDRAULIC SNUBBER MPL 1B21G7086	VT-3	NS	605-103
F1.SN	1B21-S105D	HYDRAULIC SNUBBER MPL 1B21G7087	VT-3	NS	605-104
F1.ST	1B21-RS106B	RIGID STRUT MPL 1B21G7088	VT-3	NS	605-102
F1.ST	1B21-RS106C	RIGID STRUT MPL 1B21G7089	VT-3	NS	605-103
F1.SN	1B21-S107B	HYDRAULIC SNUBBER MPL 1B21G7090	VT-3	NS	605-102
F1.SN	1B21-S107C	HYDRAULIC SNUBBER MPL 1B21G7091	VT-3	3	605-103

ITEM NO.	MARK NO.	COMPONENT DESCRIPTION	EXAM METHOD	PERIOD SCHED.	ISI ISO SS-305-
		EXAMINATION CATEGORY: F-A			
F1.40	1B33-B301A	RIGID STRUT, PUMP, MPL 1B33G7000A	VT-3	1	602-102
F1.40	1B33-B301B	RIGID STRUT, PUMP, MPL 1B33G7000B	VT-3	NS	602-104
F1.40	1B33-B302A	RIGID STRUT, PUMP, MPL 1B33G7001A	VT-3	2	602-102
F1.40	1B33-B302B	RIGID STRUT, PUMP, MPL 1B33G7001B	VT-3	NS	602-104
F1.G	1B33-H0001	RIGID GUIDE	VT-3	NS	671-101
F1.G	1B33-H0004	RIGID GUIDE	VT-3	2	671-101
F1.40	1B33-H301A	CONSTANT SUPPORT, PUMP, MPL 1B33G7013A	VT-3	3	602-102
F1.40	1B33-H301B	CONSTANT SUPPORT, PUMP, MPL 1B33G7013B	VT-3	NS	602-104
F1.40	1B33-H302A	CONSTANT SUPPORT, PUMP, MPL 1B33F7014A	VT-3	1	602-102
F1.40	1B33-H302B	CONSTANT SUPPORT, PUMP, MPL 1B33G7014B	VT-3	NS	602-104
F1.40	1B33-H303A	CONSTANT SUPPORT, PUMP, MPL 1B33G7015A	VT-3	3	602-102
F1.40	1B33-H303B	CONSTANT SUPPORT, PUMP, MPL 1B33G7015B	VT-3	NS	602-104
F1.40	1B33-H304A	CONSTANT SUPPORT, PUMP, MPL 1B33G7016A	VT-3	3	602-102
F1.40	1B33-H304B	CONSTANT SUPPORT, PUMP, MPL 1B33G7016B	VT-3	NS	602-104
F1.SP	1B33-H305A	VARIABLE SPRING (WA) MPL 1B33G7017A	VT-3	1	602-102
F1.SP	1B33-H305B	VARIABLE SPRING (WA) MPL 1B33G7017B	VT-3	NS	602-104
F1.SP	1B33-H306A	VARIABLE SPRING (WA) MPL 1B33G7018A	VT-3	NS	602-102
F1.SP	1B33-H306B	VARIABLE SPRING (WA) MPL 1B33G7018B	VT-3	NS	602-104
F1.SP	1B33-H351A	VARIABLE SPRING, MPL 1B33G7019A	VT-3	NS	602-101
F1.SP	1B33-H351B	VARIABLE SPRING, MPL 1B33G7019B	VT-3	NS	602-103
F1.SP	1B33-H352A	VARIABLE SPRING, MPL 1B33G7020A	VT-3	NS	602-101
F1.SP	1B33-H352B	VARIABLE SPRING, MPL 1B33G7020B	VT-3	NS	602-103
F1.SP	1B33-H353A	VARIABLE SPRING, MPL 1B33G7021A	VT-3	NS	602-101
F1.SP	1B33-H353B	VARIABLE SPRING, MPL 1B33G7021B	VT-3	3	602-103
F1.SP	1B33-H354A	VARIABLE SPRING, MPL 1B33G7022A	VT-3	NS	602-101
F1.SP	1B33-H354B	VARIABLE SPRING, MPL 1B33G7022B	VT-3	NS	602-103
F1.SP	1B33-H355A	VARIABLE SPRING, MPL 1B33G7023A	VT-3	NS	602-102
F1.SP	1B33-H355B	VARIABLE SPRING, MPL 1B33G7023B	VT-3	2	602-104
F1.SP	1B33-H356A	VARIABLE SPRING, MPL 1B33G7024A	VT-3	NS	602-102
F1.SP	1B33-H356B	VARIABLE SPRING, MPL 1B33G7024B	VT-3	NS	602-104
F1.G	1B33-H5000	RIGID GUIDE	VT-3	NS	671-102
F1.G	1B33-H5001	RIGID GUIDE	VT-3	NS	671-102
F1.40	1B33-S369A	HYDRAULIC SNUBBER, PUMP, MPL 1B33G7064A	VT-3	1	602-102
F1.40	1B33-S369B	HYDRAULIC SNUBBER, PUMP, MPL 1B33G7064B	VT-3	NS	602-104
F1.40	1B33-S370A	HYDRAULIC SNUBBER, PUMP, MPL 1B33G7065A	VT-3	2	602-102
F1.40	1B33-S370B	HYDRAULIC SNUBBER, PUMP, MPL 1B33G7065B	VT-3	NS	602-104
F1.40	1B33-S371A	HYDRAULIC SNUBBER, PUMP, MPL 1B33G7066A	VT-3	3	602-102
F1.40	1B33-S371B	HYDRAULIC SNUBBER, PUMP, MPL 1B33G7066B	VT-3	NS	602-104
F1.40	1B33-S372A	HYDRAULIC SNUBBER, PUMP (WA), MPL 1B33G7067A	VT-3	1	602-102

ITEM NO.	MARK NO.	COMPONENT DESCRIPTION	EXAM METHOD	PERIOD SCHED.	ISI ISO SS-305-
		EXAMINATION CATEGORY: F-A			
F1.40	1B33-S372B	HYDRAULIC SNUBBER, PUMP (WA), MPL 1B33G7067B	VT-3	NS	602-104
F1.40	1B33-S373A	HYDRAULIC SNUBBER, PUMP (WA), MPL 1B33G7068A	VT-3	1	602-102
F1.40	1B33-S373B	HYDRAULIC SNUBBER, PUMP (WA), MPL 1B33G7068B	VT-3	NS	602-104
F1.40	1B33-S374A	HYDRAULIC SNUBBER, PUMP (WA), MPL 1B33G7069A	VT-3	2	602-102
F1.40	1B33-S374B	HYDRAULIC SNUBBER, PUMP (WA), MPL 1B33G7069B	VT-3	NS	602-104
F1.40	1B33-S375A	HYDRAULIC SNUBBER, PUMP (WA), MPL 1B33G7070A	VT-3	2	602-102
F1.40	1B33-S375B	HYDRAULIC SNUBBER, PUMP (WA), MPL 1B33G7070B	VT-3	NS	602-104
F2.G	1C11-H0031	RIGID GUIDE (WA)	VT-3	NS	871-103
F2.G	1C11-H0032	RIGID GUIDE (WA)	VT-3	NS	871-103
F2.G	1C11-H0033	RIGID GUIDE (WA)	VT-3	1	871-103
F2.ST	1C11-H0036	RIGID STRUT	VT-3	NS	871-103
F2.ST	1C11-H0037	RIGID STRUT	VT-3	NS	871-103
F2.G	1C11-H0038	RIGID GUIDE (WA)	VT-3	NS	871-103
F2.G	1C11-H0039	RIGID GUIDE (WA)	VT-3	NS	871-103
F2.G	1C11-H0040	RIGID GUIDE (WA)	VT-3	3	871-104
F2.G	1C11-H0041	RIGID GUIDE (WA)	VT-3	NS	871-104
F2.G	1C11-H0042	RIGID GUIDE (WA)	VT-3	NS	871-104
F2.G	1C11-H0043	RIGID GUIDE (WA)	VT-3	NS	871-104
F2.ST	1C11-H0044	RIGID STRUT	VT-3	NS	871-104
F2.ST	1C11-H0045	RIGID STRUT	VT-3	NS	871-104
F2.G	1C11-H0046	RIGID GUIDE (WA)	VT-3	NS	871-101
F2.ST	1C11-H0047	RIGID STRUT	VT-3	NS	871-101
F2.G	1C11-H0048	RIGID GUIDE (WA)	VT-3	NS	871-101
F2.G	1C11-H0049	RIGID GUIDE (WA)	VT-3	NS	871-101
F2.ST	1C11-H0050	RIGID STRUT	VT-3	3	871-101
F2.G	1C11-H0051	RIGID GUIDE (WA)	VT-3	NS	871-101
F2.G	1C11-H0052	RIGID GUIDE (WA)	VT-3	2	871-101
F2.G	1C11-H0053	RIGID GUIDE (WA)	VT-3	NS	871-101
F2.ST	1C11-H0054	RIGID STRUT	VT-3	NS	871-102
F2.G	1C11-H0056	RIGID GUIDE (WA)	VT-3	NS	871-102
F2.G	1C11-H0057	RIGID GUIDE (WA)	VT-3	NS	871-102
F2.ST	1C11-H0059	RIGID STRUT	VT-3	NS	871-102
F2.G	1C11-H0060	RIGID GUIDE (WA)	VT-3	NS	871-102
F1.50	1C11-H0634	RIGID STRUT (AUGMENTED HEPIBER)	VT-3	2	871-105
F2.SN	1C11-H0659	MECHANICAL SNUBBER (WA)	VT-3	1	871-102
F2.STm	1C11-H0660	RIGID STRUT	VT-3	NS	871-101
F2.SN	1C11-H0661	MECHANICAL SNUBBER (WA)	VT-3	NS	871-101
F2.SN	1C11-H0662	MECHANICAL SNUBBER (WA)	VT-3	NS	871-104

ITEM NO.	MARK NO.	COMPONENT DESCRIPTION	EXAM METHOD	PERIOD SCHED.	ISI ISO SS-305-
		EXAMINATION CATEGORY: F-A			
F2.SN	1C11-H0663	MECHANICAL SNUBBER	VT-3	3	871-103
F2.STm	1C11-H0665	RIGID STRUT (WA)	VT-3	1	871-104
F2.SN	1C11-H0666	MECHANICAL SNUBBER (WA)	VT-3	NS	871-104
F2.STm	1C11-H0667	RIGID STRUT (WA)	VT-3	NS	871-103
F2.STm	1C11-H0668	RIGID STRUT (WA)	VT-3	NS	871-103
F2.SN	1C11-H0673	MECHANICAL SNUBBER	VT-3	2	871-101
F2.STm	1C11-H0674	RIGID STRUT (WA)	VT-3	NS	871-101
F2.SN	1C11-H0675	MECHANICAL SNUBBER (WA)	VT-3	NS	871-102
F1.50	1C11-H0695	RIGID ANCHOR (AUGMENTED HEPIBER)	VT-3	2	871-105
F2.SN	1C11-H5013	MECHANICAL SNUBBER	VT-3	NS	871-101
F2.SN	1C11-H5014	MECHANICAL SNUBBER	VT-3	NS	871-103
F1.50	1C11-H5161	RIGID GUIDE (AUGMENTED HEPIBER)	VT-3	2	871-105
F1.ST	1C41-H0056	RIGID STRUT	VT-3	3	691-101
F1.Gs	1C41-H0059	RIGID GUIDE	VT-3	1	691-101
F1.Gs	1C41-H0061	RIGID GUIDE	VT-3	NS	691-101
F1.ST	1C41-H0063	RIGID STRUT	VT-3	NS	691-101
F1.Gs	1C41-H0064	RIGID GUIDE	VT-3	NS	691-101
F1.Gs	1C41-H0065	RIGID GUIDE	VT-3	NS	691-101
F1.G	1C41-H0066	RIGID GUIDE	VT-3	NS	691-101
F1.SN	1C41-H0067	MECHANICAL SNUBBER	VT-3	NS	691-101
F1.SP	1C41-H0068	VARIABLE SPRING	VT-3	1	691-101
F1.ST	1C41-H0069	RIGID STRUT	VT-3	NS	691-101
F1.SN	1C41-H0109	MECHANICAL SNUBBER (TANDEM)	VT-3	NS	691-101
F1.SN	1C41-H0110	MECHANICAL SNUBBER	VT-3	2	691-101
F1.R	1C41-H0119	RIGID SUPPORT	VT-3	NS	691-101
F1.SN	1C41-H5000	MECHANICAL SNUBBER	VT-3	NS	691-101
F1.SN	1C41-H5001	MECHANICAL SNUBBER	VT-3	NS	691-101
F1.SN	1C41-H5002	MECHANICAL SNUBBER	VT-3	NS	691-101
F1.SN	1C41-H5003	MECHANICAL SNUBBER	VT-3	NS	691-101
F1.R	1C41-H5004	RIGID SUPPORT	VT-3	3	691-101
F1.SN	1C41-H5005	MECHANICAL SNUBBER	VT-3	3	691-101
F1.Gs	1C41-H5021	RIGID GUIDE	VT-3	NS	691-101
F1.Gs	1C41-H5022	RIGID GUIDE	VT-3	NS	691-101
F1.A	1C41-PRB4031-SP	ANCHOR (WA)	VT-3	NS	691-102
F1.40	1E12-B001A-SB1-SP	RIGID, HEAT EXCHANGER SUPPORT (WA)	VT-3	1	641-121
F1.40	1E12-B001A-SB2-SP	RIGID, HEAT EXCHANGER SUPPORT (WA)	VT-3	2	641-121
F1.40	1E12-B001A-SB3-SP	RIGID, HEAT EXCHANGER SUPPORT (WA)	VT-3	3	641-121
F1.40	1E12-B001A-SB4-SP	RIGID, HEAT EXCHANGER SUPPORT (WA)	VT-3	3	641-121

ITEM NO.	MARK NO.	COMPONENT DESCRIPTION	EXAM METHOD	PERIOD SCHED.	ISI ISO SS-305-
		EXAMINATION CATEGORY: F-A			
F1.40	1E12-B001B-SB1-SP	RIGID, HEAT EXCHANGER SUPPORT (WA)	VT-3	NS	643-121
F1.40	1E12-B001B-SB2-SP	RIGID, HEAT EXCHANGER SUPPORT (WA)	VT-3	NS	643-121
F1.40	1E12-B001B-SB3-SP	RIGID, HEAT EXCHANGER SUPPORT (WA)	VT-3	NS	643-121
F1.40	1E12-B001B-SB4-SP	RIGID, HEAT EXCHANGER SUPPORT (WA)	VT-3	NS	643-121
F1.40	1E12-B001C-SB1-SP	RIGID, HEAT EXCHANGER SUPPORT (WA)	VT-3	NS	641-122
F1.40	1E12-B001C-SB2-SP	RIGID, HEAT EXCHANGER SUPPORT (WA)	VT-3	NS	641-122
F1.40	1E12-B001C-SB3-SP	RIGID, HEAT EXCHANGER SUPPORT (WA)	VT-3	NS	641-122
F1.40	1E12-B001C-SB4-SP	RIGID, HEAT EXCHANGER SUPPORT (WA)	VT-3	NS	641-122
F1.40	1E12-B001D-SB1-SP	RIGID, HEAT EXCHANGER SUPPORT (WA)	VT-3	NS	643-123
F1.40	1E12-B001D-SB2-SP	RIGID, HEAT EXCHANGER SUPPORT (WA)	VT-3	NS	643-123
F1.40	1E12-B001D-SB3-SP	RIGID, HEAT EXCHANGER SUPPORT (WA)	VT-3	NS	643-123
F1.40	1E12-B001D-SB4-SP	RIGID, HEAT EXCHANGER SUPPORT (WA)	VT-3	NS	643-123
F1.40	1E12-B001A-SL1-SP	RIGID, HEAT EXCHANGER GUIDE (WA)	VT-3	1	641-121
F1.40	1E12-B001A-SL2-SP	RIGID, HEAT EXCHANGER GUIDE (WA)	VT-3	2	641-121
F1.40	1E12-B001A-SL3-SP	RIGID, HEAT EXCHANGER GUIDE (WA)	VT-3	1	641-121
F1.40	1E12-B001A-SL4-SP	RIGID, HEAT EXCHANGER GUIDE (WA)	VT-3	2	641-121
F1.40	1E12-B001B-SL1-SP	RIGID, HEAT EXCHANGER GUIDE (WA)	VT-3	NS	643-121
F1.40	1E12-B001B-SL2-SP	RIGID, HEAT EXCHANGER GUIDE (WA)	VT-3	NS	643-121
F1.40	1E12-B001B-SL3-SP	RIGID, HEAT EXCHANGER GUIDE (WA)	VT-3	NS	643-121
F1.40	1E12-B001B-SL4-SP	RIGID, HEAT EXCHANGER GUIDE (WA)	VT-3	NS	643-121
F1.40	1E12-B001C-SL1-SP	RIGID, HEAT EXCHANGER GUIDE (WA)	VT-3	NS	641-122
F1.40	1E12-B001C-SL2-SP	RIGID, HEAT EXCHANGER GUIDE (WA)	VT-3	NS	641-122
F1.40	1E12-B001C-SL3-SP	RIGID, HEAT EXCHANGER GUIDE (WA)	VT-3	NS	641-122
F1.40	1E12-B001C-SL4-SP	RIGID, HEAT EXCHANGER GUIDE (WA)	VT-3	NS	641-122
F1.40	1E12-B001D-SL1-SP	RIGID, HEAT EXCHANGER GUIDE (WA)	VT-3	NS	643-123
F1.40	1E12-B001D-SL2-SP	RIGID, HEAT EXCHANGER GUIDE (WA)	VT-3	NS	643-123
F1.40	1E12-B001D-SL3-SP	RIGID, HEAT EXCHANGER GUIDE (WA)	VT-3	NS	643-123
F1.40	1E12-B001D-SL4-SP	RIGID, HEAT EXCHANGER GUIDE (WA)	VT-3	NS	643-123
F1.40	1E12-C002A-SP1	ANCHOR, PUMP SUPPORT	VT-3	1	641-120
F1.40	1E12-C002A-SP2	RIGID, PUMP GUIDE (WA)	VT-3	SR	641-120
F1.40	1E12-C002A-SP3	RIGID, PUMP GUIDE (WA)	VT-3	SR	641-120
F1.40	1E12-C002A-SP4	RIGID, PUMP GUIDE (WA)	VT-3	SR	641-120
F1.40	1E12-C002B-SP1	ANCHOR, PUMP SUPPORT	VT-3	NS	641-123
F1.40	1E12-C002B-SP2	RIGID, PUMP GUIDE (WA)	VT-3	NS	641-123
F1.40	1E12-C002B-SP3	RIGID, PUMP GUIDE (WA)	VT-3	NS	641-123
F1.40	1E12-C002B-SP4	RIGID, PUMP GUIDE (WA)	VT-3	NS	641-123
F1.40	1E12-C002C-SP1	ANCHOR, PUMP SUPPORT	VT-3	NS	643-122
F1.40	1E12-C002C-SP2	RIGID, PUMP GUIDE (WA)	VT-3	NS	643-122
F1.40	1E12-C002C-SP3	RIGID, PUMP GUIDE (WA)	VT-3	NS	643-122
F1.40	1E12-C002C-SP4	RIGID, PUMP GUIDE (WA)	VT-3	NS	643-122

ITEM NO.	MARK NO.	COMPONENT DESCRIPTION	EXAM METHOD	PERIOD SCHED.	ISI ISO SS-305-
		EXAMINATION CATEGORY: F-A			
F1.ST	1E12-H0001	RIGID STRUT (TANDEM)	VT-3	1	642-139
F1.SP	1E12-H0003	VARIABLE SPRING	VT-3	1	642-141
F1.SN	1E12-H0004	MECHANICAL SNUBBER	VT-3	2	642-141
F1.SN	1E12-H0005	MECHANICAL SNUBBER	VT-3	NS	642-140
F1.SN	1E12-H0006	MECHANICAL SNUBBER	VT-3	NS	642-140
F1.SN	1E12-H0007	MECHANICAL SNUBBER	VT-3	NS	642-145
F1.SP	1E12-H0009	VARIABLE SPRING	VT-3	NS	642-145
F1.SN	1E12-H0010	MECHANICAL SNUBBER	VT-3	1	642-145
F1.SN	1E12-H0011	MECHANICAL SNUBBER	VT-3	NS	642-144
F1.SN	1E12-H0012	MECHANICAL SNUBBER	VT-3	NS	642-144
F1.SN	1E12-H0015	MECHANICAL SNUBBER	VT-3	NS	642-143
F1.SN	1E12-H0016	MECHANICAL SNUBBER	VT-3	3	642-125
F1.SN	1E12-H0017	MECHANICAL SNUBBER	VT-3	NS	642-125
F1.SN	1E12-H0018	MECHANICAL SNUBBER	VT-3	NS	642-143
F1.R	1E12-H0019	RIGID SUPPORT	VT-3	1	642-143
F1.SP	1E12-H0020	VARIABLE SPRING	VT-3	NS	642-125
F1.R	1E12-H0021	RIGID SUPPORT	VT-3	NS	642-143
F1.R	1E12-H0022	RIGID SUPPORT	VT-3	NS	642-143
F1.R	1E12-H0023	RIGID SUPPORT	VT-3	NS	642-143
F2.SP	1E12-H0024	VARIABLE SPRING	VT-3	NS	642-126
F1.R	1E12-H0025	RIGID SUPPORT	VT-3	NS	642-142
F1.SN	1E12-H0026	MECHANICAL SNUBBER	VT-3	NS	642-142
F1.R	1E12-H0027	RIGID SUPPORT	VT-3	3	642-142
F1.R	1E12-H0028	RIGID SUPPORT	VT-3	NS	642-142
F1.R	1E12-H0029	RIGID SUPPORT	VT-3	NS	642-142
F1.SN	1E12-H0030	MECHANICAL SNUBBER	VT-3	NS	642-142
F1.ST	1E12-H0032	RIGID STRUT	VT-3	NS	642-142
F1.SN	1E12-H0035	MECHANICAL SNUBBER	VT-3	NS	642-135
F1.SN	1E12-H0036	MECHANICAL SNUBBER	VT-3	3	642-135
F2.SN	1E12-H0039	MECHANICAL SNUBBER	VT-3	1	642-126
F1.R	1E12-H0040	RIGID SUPPORT	VT-3	NS	642-139
F2.G	1E12-H0041	RIGID GUIDE	VT-3	NS	642-127
F2.SP	1E12-H0042	VARIABLE SPRING (TANDEM)	VT-3	NS	642-127
F2.Gs	1E12-H0043	RIGID GUIDE	VT-3	NS	642-126
F2.G	1E12-H0044	RIGID GUIDE (WA)	VT-3	NS	642-137
F2.SN	1E12-H0045	MECHANICAL SNUBBER (TANDEM)	VT-3	NS	642-138
F1.SN	1E12-H0046	MECHANICAL SNUBBER	VT-3	NS	642-139
F1.SN	1E12-H0047	MECHANICAL SNUBBER	VT-3	NS	642-139
F1.R	1E12-H0048	RIGID ROD	VT-3	NS	642-139

ITEM NO.	MARK NO.	COMPONENT DESCRIPTION	EXAM METHOD	PERIOD SCHED.	ISI ISO SS-305-
		EXAMINATION CATEGORY: F-A			
F1.SN	1E12-H0049	MECHANICAL SNUBBER	VT-3	NS	642-139
F1.R	1E12-H0050	RIGID ROD	VT-3	2	642-139
F1.SN	1E12-H0051	MECHANICAL SNUBBER	VT-3	3	642-137
F1.SP	1E12-H0052	VARIABLE SPRING (TANDEM)	VT-3	NS	642-139
F1.R	1E12-H0053	RIGID SUPPORT	VT-3	NS	642-142
F1.R	1E12-H0054	RIGID SUPPORT	VT-3	1	642-142
F1.ST	1E12-H0055	RIGID STRUT	VT-3	NS	642-142
F1.R	1E12-H0056	RIGID SUPPORT	VT-3	NS	642-142
F1.R	1E12-H0057	RIGID SUPPORT	VT-3	NS	642-142
F1.R	1E12-H0058	RIGID SUPPORT	VT-3	NS	642-142
F1.R	1E12-H0059	RIGID SUPPORT	VT-3	NS	642-143
F3.SN	1E12-H0060	MECHANICAL SNUBBER (WA) (TANDEM)	VT-3	NS	642-149
F3.SP	1E12-H0061	VARIABLE SPRING (WA)	VT-3	NS	642-149
F3.G	1E12-H0062	RIGID GUIDE (WA)	VT-3	3	642-149
F3.ST	1E12-H0063	RIGID STRUT	VT-3	NS	642-149
F1.SN	1E12-H0074	MECHANICAL SNUBBER	VT-3	NS	642-142
F1.SP	1E12-H0075	VARIABLE SPRING	VT-3	NS	642-141
F1.SP	1E12-H0076	VARIABLE SPRING	VT-3	NS	642-145
F2.STm	1E12-H0077	RIGID STRUT	VT-3	NS	642-133
F2.STm	1E12-H0084	RIGID STRUT	VT-3	3*	642-133
F2.STm	1E12-H0085	RIGID STRUT	VT-3	NS*	642-133
F2.STm	1E12-H0086	RIGID STRUT	VT-3	NS*	642-133
F2.ST	1E12-H0093	RIGID STRUT (WA < .75")	VT-3	NS	642-121
F2.STm	1E12-H0095	RIGID STRUT	VT-3	NS*	642-121
F2.STm	1E12-H0097	RIGID STRUT	VT-3	NS*	642-121
F2.STm	1E12-H0099	RIGID STRUT	VT-3	NS*	642-121
F1.SP	1E12-H0100	VARIABLE SPRING (WA)	VT-3	NS	642-117
F2.A	1E12-H0102	ANCHOR (WA < .75")	VT-3	3*	641-117
F2.SN	1E12-H0104	MECHANICAL SNUBBER	VT-3	1*	642-119
F2.SN	1E12-H0105	MECHANICAL SNUBBER	VT-3	NS*	642-119
F2.SN	1E12-H0106	MECHANICAL SNUBBER	VT-3	NS*	642-119
F2.SP	1E12-H0107	VARIABLE SPRING	VT-3	NS*	642-119
F2.SN	1E12-H0108	MECHANICAL SNUBBER	VT-3	NS*	642-119
F2.SN	1E12-H0109	HYDRAULIC SNUBBER	VT-3	NS*	642-119
F2.SN	1E12-H0110	MECHANICAL SNUBBER	VT-3	NS*	642-119
F2.ST	1E12-H0111	RIGID STRUT	VT-3	NS*	642-119
F2.ST	1E12-H0114	RIGID STRUT	VT-3	NS	642-119
F2.SN	1E12-H0115	MECHANICAL SNUBBER	VT-3	NS	642-119
F2.SN	1E12-H0116	MECHANICAL SNUBBER (TANDEM) (WA < .75")	VT-3	NS	642-119

ITEM NO.	MARK NO.	COMPONENT DESCRIPTION	EXAM METHOD	PERIOD SCHED.	ISI ISO SS-305-
		EXAMINATION CATEGORY: F-A			
F2.R	1E12-H0117	RIGID SUPPORT	VT-3	NS	642-119
F2.A	1E12-H0118	ANCHOR (WA)	VT-3	NS	642-119
F2.ST	1E12-H0119	RIGID STRUT	VT-3	NS*	642-132
F2.A	1E12-H0120	ANCHOR (WA)	VT-3	2	643-110
F2.ST	1E12-H0121	RIGID STRUT	VT-3	NS	642-132
F2.SN	1E12-H0122	MECHANICAL SNUBBER (WA < .75") (TANDEM)	VT-3	NS	642-132
F2.ST	1E12-H0123	RIGID STRUT	VT-3	3	642-132
F2.SN	1E12-H0124	MECHANICAL SNUBBER	VT-3	NS	642-132
F2.A	1E12-H0128	ANCHOR (WA)	VT-3	NS*	641-116
F2.A	1E12-H0136	ANCHOR (WA)	VT-3	NS*	643-116
F2.SP	1E12-H0138	VARIABLE SPRING (TANDEM)	VT-3	2	643-115
F2.ST	1E12-H0140	RIGID STRUT	VT-3	NS	643-115
F2.SP	1E12-H0141	VARIABLE SPRING (TANDEM)	VT-3	NS	643-117
F2.SP	1E12-H0142	VARIABLE SPRING	VT-3	NS*	643-116
F2.ST	1E12-H0143	RIGID STRUT (WA)	VT-3	2*	643-116
F2.G	1E12-H0147	RIGID GUIDE	VT-3	NS	643-117
F2.ST	1E12-H0148	RIGID STRUT	VT-3	NS*	643-116
F2.ST	1E12-H0149	RIGID STRUT	VT-3	NS*	643-116
F2.ST	1E12-H0150	RIGID STRUT	VT-3	NS*	643-116
F2.Gs	1E12-H0152	RIGID GUIDE	VT-3	NS*	641-116
F2.G	1E12-H0153	RIGID GUIDE	VT-3	NS*	641-116
F2.G	1E12-H0154	RIGID GUIDE	VT-3	3*	641-116
F2.ST	1E12-H0157	RIGID STRUT	VT-3	NS*	641-117
F2.ST	1E12-H0158	RIGID STRUT	VT-3	NS*	641-117
F2.ST	1E12-H0159	RIGID STRUT	VT-3	NS*	641-117
F2.Gs	1E12-H0160	RIGID GUIDE	VT-3	NS*	641-117
F2.A	1E12-H0161	ANCHOR (WA < .75")	VT-3	NS*	641-117
F2.SN	1E12-H0162	MECHANICAL SNUBBER	VT-3	NS*	643-116
F2.Gs	1E12-H0163	RIGID GUIDE	VT-3	NS*	643-116
F2.SN	1E12-H0164	MECHANICAL SNUBBER (WA < .75")	VT-3	NS	643-117
F2.SN	1E12-H0165	MECHANICAL SNUBBER	VT-3	NS	643-117
F2.SP	1E12-H0166	VARIABLE SPRING	VT-3	NS	642-112
F2.SP	1E12-H0167	VARIABLE SPRING	VT-3	NS	642-111
F2.SN	1E12-H0169	HYDRAULIC SNUBBER (WA) (TANDEM)	VT-3	NS	642-111
F2.SN	1E12-H0170	HYDRAULIC SNUBBER	VT-3	2	642-111
F2.SN	1E12-H0171	HYDRAULIC SNUBBER	VT-3	NS	642-111
F2.SN	1E12-H0172	MECHANICAL SNUBBER	VT-3	NS	642-110
F2.SP	1E12-H0173	VARIABLE SPRING (WA) (TANDEM)	VT-3	NS	642-110
F2.SP	1E12-H0175	VARIABLE SPRING	VT-3	NS*	642-132

ITEM NO.	MARK NO.	COMPONENT DESCRIPTION	EXAM METHOD	PERIOD SCHED.	ISI ISO SS-305-
		EXAMINATION CATEGORY: F-A			
F2.ST	1E12-H0176	RIGID STRUT	VT-3	NS*	642-108
F2.SP	1E12-H0177	VARIABLE SPRING	VT-3	NS*	642-108
F2.ST	1E12-H0178	RIGID STRUT	VT-3	NS*	642-108
F2.SN	1E12-H0180	MECHANICAL SNUBBER (WA < .75")	VT-3	NS*	642-132
F2.ST	1E12-H0182	RIGID STRUT	VT-3	NS*	642-108
F2.ST	1E12-H0183	RIGID STRUT	VT-3	NS*	642-108
F2.SP	1E12-H0184	VARIABLE SPRING	VT-3	NS	641-118
F2.ST	1E12-H0185	RIGID STRUT	VT-3	3*	643-101
F2.SP	1E12-H0186	VARIABLE SPRING (WA < .75")	VT-3	NS	643-101
F2.G	1E12-H0187	RIGID GUIDE (WA)	VT-3	2	643-101
F2.G	1E12-H0188	RIGID GUIDE	VT-3	NS*	643-111
F2.SP	1E12-H0189	VARIABLE SPRING	VT-3	NS*	643-111
F2.SN	1E12-H0190	MECHANICAL SNUBBER	VT-3	3*	643-111
F2.SN	1E12-H0192	MECHANICAL SNUBBER	VT-3	NS*	643-111
F2.SP	1E12-H0193	VARIABLE SPRING	VT-3	NS*	643-107
F2.SP	1E12-H0194	VARIABLE SPRING	VT-3	NS*	643-108
F2.SN	1E12-H0195	MECHANICAL SNUBBER	VT-3	1*	641-114
F2.STm	1E12-H0197	RIGID STRUT	VT-3	1*	641-114
F2.ST	1E12-H0198	RIGID STRUT	VT-3	NS*	641-114
F2.ST	1E12-H0199	RIGID STRUT	VT-3	NS*	641-114
F2.G	1E12-H0200	RIGID GUIDE	VT-3	NS*	641-114
F2.G	1E12-H0201	RIGID GUIDE	VT-3	NS	643-104
F2.R	1E12-H0202	RIGID ROD	VT-3	NS*	641-114
F2.SP	1E12-H0210	VARIABLE SPRING	VT-3	NS	641-118
F2.SN	1E12-H0211	MECHANICAL SNUBBER	VT-3	NS	641-118
F2.ST	1E12-H0212	RIGID STRUT	VT-3	NS	641-118
F2.SN	1E12-H0213	MECHANICAL SNUBBER	VT-3	NS	641-118
F2.ST	1E12-H0214	RIGID STRUT	VT-3	NS*	641-113
F2.SP	1E12-H0215	VARIABLE SPRING	VT-3	NS*	641-113
F2.ST	1E12-H0216	RIGID STRUT	VT-3	NS*	641-113
F2.ST	1E12-H0219	RIGID STRUT (WA < .75") (TANDEM)	VT-3	NS*	641-119
F2.ST	1E12-H0220	RIGID STRUT	VT-3	NS*	641-119
F2.ST	1E12-H0233	RIGID STRUT (WA < .75") (TANDEM)	VT-3	NS*	641-119
F2.SN	1E12-H0234	MECHANICAL SNUBBER (WA < .75")	VT-3	NS*	641-119
F2.SP	1E12-H0236	VARIABLE SPRING (TANDEM)	VT-3	NS	642-103
F2.SP	1E12-H0237	VARIABLE SPRING	VT-3	3	643-113
F2.ST	1E12-H0238	RIGID STRUT	VT-3	NS*	643-106
F2.SP	1E12-H0239	VARIABLE SPRING	VT-3	NS*	643-106
F2.ST	1E12-H0240	RIGID STRUT	VT-3	NS*	643-106
F2.SP	1E12-H0254	VARIABLE SPRING	VT-3	NS	643-113

ITEM NO.	MARK NO.	COMPONENT DESCRIPTION	EXAM METHOD	PERIOD SCHED.	ISI ISO SS-305-
		EXAMINATION CATEGORY: F-A			
F2.SN	1E12-H0255	MECHANICAL SNUBBER	VT-3	NS	643-113
F2.SN	1E12-H0256	MECHANICAL SNUBBER	VT-3	NS	643-113
F2.SN	1E12-H0257	MECHANICAL SNUBBER	VT-3	NS	643-113
F2.ST	1E12-H0258	RIGID STRUT (WA < .75")	VT-3	NS*	643-114
F2.ST	1E12-H0259	RIGID STRUT	VT-3	NS*	643-114
F2.ST	1E12-H0260	RIGID STRUT	VT-3	NS*	643-114
F2.ST	1E12-H0261	RIGID STRUT (WA < .75")	VT-3	NS*	643-114
F2.SN	1E12-H0263	MECHANICAL SNUBBER (WA) (TANDEM)	VT-3	NS	642-127
F2.SN	1E12-H0264	MECHANICAL SNUBBER	VT-3	NS	642-126
F2.ST	1E12-H0277	RIGID STRUT	VT-3	1	641-112
F2.ST	1E12-H0278	RIGID STRUT	VT-3	NS	641-112
F2.ST	1E12-H0279	RIGID STRUT	VT-3	NS	641-112
F2.SN	1E12-H0280	MECHANICAL SNUBBER	VT-3	NS	641-112
F2.A	1E12-H0281	ANCHOR (WA)	VT-3	NS	643-102
F2.ST	1E12-H0282	RIGID STRUT	VT-3	NS	641-112
F2.ST	1E12-H0283	RIGID STRUT	VT-3	NS	641-112
F2.SN	1E12-H0284	MECHANICAL SNUBBER	VT-3	NS	641-112
F2.SP	1E12-H0286	VARIABLE SPRING	VT-3	NS	641-101
F2.R	1E12-H0287	RIGID SUPPORT	VT-3	NS	641-101
F2.SN	1E12-H0288	MECHANICAL SNUBBER	VT-3	NS	641-101
F2.SN	1E12-H0289	MECHANICAL SNUBBER (WA)	VT-3	NS	641-101
F2.SN	1E12-H0290	MECHANICAL SNUBBER (WA)	VT-3	NS	641-101
F2.SP	1E12-H0291	VARIABLE SPRING (TANDEM)	VT-3	2	641-101
F2.SN	1E12-H0292	MECHANICAL SNUBBER	VT-3	3	641-101
F2.SN	1E12-H0293	HYDRAULIC SNUBBER (TANDEM)	VT-3	NS	641-101
F2.SP	1E12-H0294	VARIABLE SPRING	VT-3	NS	641-101
F2.SN	1E12-H0295	MECHANICAL SNUBBER	VT-3	NS	642-105
F2.ST	1E12-H0299	RIGID STRUT	VT-3	NS*	641-115
F2.ST	1E12-H0300	RIGID STRUT	VT-3	NS*	641-115
F2.ST	1E12-H0301	RIGID STRUT	VT-3	NS*	641-115
F2.ST	1E12-H0302	RIGID STRUT	VT-3	NS*	641-115
F2.SN	1E12-H0303	MECHANICAL SNUBBER	VT-3	NS*	641-115
F2.ST	1E12-H0304	RIGID STRUT	VT-3	3*	641-115
F2.SN	1E12-H0305	MECHANICAL SNUBBER (WA)	VT-3	NS*	641-115
F2.ST	1E12-H0306	RIGID STRUT	VT-3	NS*	641-115
F2.SP	1E12-H0308	VARIABLE SPRING (WA)	VT-3	NS	642-105
F2.SN	1E12-H0309	HYDRAULIC SNUBBER	VT-3	NS	642-105
F2.SN	1E12-H0310	MECHANICAL SNUBBER	VT-3	NS	642-105
F2.SP	1E12-H0311	VARIABLE SPRING (WA < .75")	VT-3	NS	642-107

ITEM NO.	MARK NO.	COMPONENT DESCRIPTION	EXAM METHOD	PERIOD SCHED.	ISI ISO SS-305-
		EXAMINATION CATEGORY: F-A			
F2.SP	1E12-H0312	VARIABLE SPRING (WA <.75")	VT-3	NS	642-107
F2.SN	1E12-H0313	MECHANICAL SNUBBER	VT-3	NS	642-107
F2.SN	1E12-H0314	MECHANICAL SNUBBER	VT-3	NS	642-107
F2.SN	1E12-H0315	HYDRAULIC SNUBBER	VT-3	NS	642-107
F2.SN	1E12-H0316	HYDRAULIC SNUBBER	VT-3	NS	642-107
F2.SN	1E12-H0317	MECHANICAL SNUBBER	VT-3	1*	641-101
F2.SN	1E12-H0318	MECHANICAL SNUBBER	VT-3	NS*	641-101
F2.SP	1E12-H0319	VARIABLE SPRING	VT-3	1*	641-101
F2.A	1E12-H0320	ANCHOR (WA)	VT-3	1	641-101
F2.SN	1E12-H0322	MECHANICAL SNUBBER (WA)	VT-3	NS	642-103
F2.SN	1E12-H0323	MECHANICAL SNUBBER (WA) (TANDEM)	VT-3	NS	642-103
F2.SN	1E12-H0324	MECHANICAL SNUBBER	VT-3	NS	642-105
F2.SN	1E12-H0325	MECHANICAL SNUBBER	VT-3	NS	642-105
F2.G	1E12-H0328	RIGID GUIDE (WA < .75")	VT-3	NS	641-102
F2.SP	1E12-H0331	VARIABLE SPRING	VT-3	NS*	641-102
F2.SN	1E12-H0333	MECHANICAL SNUBBER	VT-3	NS*	641-103
F2.SP	1E12-H0334	VARIABLE SPRING	VT-3	NS*	641-103
F2.G	1E12-H0335	RIGID GUIDE	VT-3	NS*	641-103
F2.SP	1E12-H0338	VARIABLE SPRING	VT-3	NS	641-102
F2.SN	1E12-H0339	MECHANICAL SNUBBER	VT-3	NS*	641-104
F2.SN	1E12-H0340	MECHANICAL SNUBBER	VT-3	NS*	641-108
F2.SP	1E12-H0341	VARIABLE SPRING	VT-3	NS*	641-108
F2.SN	1E12-H0344	MECHANICAL SNUBBER	VT-3	NS*	641-108
F2.SN	1E12-H0345	MECHANICAL SNUBBER	VT-3	NS*	641-108
F2.SP	1E12-H0346	VARIABLE SPRING	VT-3	NS*	641-108
F2.SN	1E12-H0347	MECHANICAL SNUBBER	VT-3	NS*	641-108
F2.R	1E12-H0348	RIGID SUPPORT	VT-3	2*	641-102
F2.SN	1E12-H0349	MECHANICAL SNUBBER	VT-3	NS	641-112
F2.ST	1E12-H0352	RIGID STRUT	VT-3	NS*	642-122
F2.ST	1E12-H0353	RIGID STRUT	VT-3	NS*	642-122
F2.A	1E12-H0354	ANCHOR (WA)	VT-3	NS*	642-122
F1.ST	1E12-H0355	RIGID STRUT	VT-3	NS	642-122
F2.G	1E12-H0356	RIGID GUIDE	VT-3	NS*	642-122
F2.SP	1E12-H0357	VARIABLE SPRING (WA < .75")	VT-3	NS	642-116
F2.SP	1E12-H0358	VARIABLE SPRING (WA < .75")	VT-3	NS	642-116
F2.SN	1E12-H0359	MECHANICAL SNUBBER (WA)	VT-3	NS	642-116
F2.SN	1E12-H0360	MECHANICAL SNUBBER (WA)	VT-3	1	642-116
F2.SN	1E12-H0361	HYDRAULIC SNUBBER	VT-3	NS	642-116
F2.SN	1E12-H0362	HYDRAULIC SNUBBER	VT-3	NS	642-116
F2.SP	1E12-H0363	VARIABLE SPRING (TANDEM)	VT-3	NS	642-114

ITEM NO.	MARK NO.	COMPONENT DESCRIPTION	EXAM METHOD	PERIOD SCHED.	ISI ISO SS-305-
		EXAMINATION CATEGORY: F-A			
F2.ST	1E12-H0364	RIGID STRUT	VT-3	NS	642-114
F2.SN	1E12-H0365	MECHANICAL SNUBBER	VT-3	3	642-114
F2.SP	1E12-H0366	VARIABLE SPRING	VT-3	NS	642-114
F2.SN	1E12-H0367	HYDRAULIC SNUBBER (WA < .75")	VT-3	NS	642-114
F2.SN	1E12-H0368	HYDRAULIC SNUBBER (WA)	VT-3	NS	642-114
F2.ST	1E12-H0369	RIGID STRUT (WA)	VT-3	NS	642-114
F2.SN	1E12-H0370	MECHANICAL SNUBBER	VT-3	NS	642-114
F2.SP	1E12-H0371	VARIABLE SPRING	VT-3	NS	642-114
F2.SP	1E12-H0372	VARIABLE SPRING (WA)	VT-3	NS	642-113
F2.SN	1E12-H0373	MECHANICAL SNUBBER	VT-3	NS	642-113
F2.SN	1E12-H0374	MECHANICAL SNUBBER	VT-3	NS	642-113
F2.SN	1E12-H0375	MECHANICAL SNUBBER	VT-3	NS	642-113
F2.SN	1E12-H0376	MECHANICAL SNUBBER	VT-3	NS	642-113
F2.SN	1E12-H0377	MECHANICAL SNUBBER	VT-3	NS	642-102
F2.SN	1E12-H0378	MECHANICAL SNUBBER	VT-3	3	642-102
F2.SN	1E12-H0379	MECHANICAL SNUBBER	VT-3	NS	642-102
F2.ST	1E12-H0380	RIGID STRUT	VT-3	NS	642-109
F2.ST	1E12-H0381	RIGID STRUT	VT-3	NS	642-109
F2.SN	1E12-H0382	MECHANICAL SNUBBER	VT-3	3*	642-114
F2.SN	1E12-H0383	MECHANICAL SNUBBER	VT-3	NS*	642-114
F2.SP	1E12-H0384	VARIABLE SPRING (WA < .75")	VT-3	3*	642-114
F2.SN	1E12-H0385	MECHANICAL SNUBBER	VT-3	NS	642-101
F2.SN	1E12-H0386	HYDRAULIC SNUBBER	VT-3	NS	642-102
F2.SN	1E12-H0388	MECHANICAL SNUBBER	VT-3	NS	642-102
F2.SN	1E12-H0389	MECHANICAL SNUBBER	VT-3	NS	642-101
F2.SP	1E12-H0390	VARIABLE SPRING (WA < .75")	VT-3	3	642-101
F2.SN	1E12-H0391	MECHANICAL SNUBBER	VT-3	NS	642-102
F2.SN	1E12-H0392	MECHANICAL SNUBBER	VT-3	NS	642-102
F2.SN	1E12-H0393	MECHANICAL SNUBBER	VT-3	NS*	642-101
F2.SN	1E12-H0394	MECHANICAL SNUBBER	VT-3	1*	642-101
F2.SP	1E12-H0395	VARIABLE SPRING (WA < .75")	VT-3	1*	642-101
F2.SP	1E12-H0396	VARIABLE SPRING (TANDEM)	VT-3	NS	642-102
F2.A	1E12-H0397	ANCHOR (WA)	VT-3	NS*	643-101
F2.A	1E12-H0400	ANCHOR (WA)	VT-3	NS*	642-104
F2.A	1E12-H0401	ANCHOR (WA)	VT-3	NS	642-109
F2.A	1E12-H0403	ANCHOR (WA)	VT-3	NS*	642-114
F2.SP	1E12-H0406	VARIABLE SPRING (WA < .75")	VT-3	NS*	642-134
F2.SN	1E12-H0407	MECHANICAL SNUBBER	VT-3	NS*	642-134
F2.SN	1E12-H0408	MECHANICAL SNUBBER	VT-3	NS*	642-134

ITEM NO.	MARK NO.	COMPONENT DESCRIPTION	EXAM METHOD	PERIOD SCHED.	ISI ISO SS-305-
		EXAMINATION CATEGORY: F-A			
F1.SP	1E12-H0409	VARIABLE SPRING	VT-3	2	642-134
F2.SN	1E12-H0410	MECHANICAL SNUBBER	VT-3	NS	642-134
F2.A	1E12-H0412	ANCHOR (WA)	VT-3	NS	643-117
F2.SN	1E12-H0414	MECHANICAL SNUBBER	VT-3	NS*	642-134
F2.ST	1E12-H0415	RIGID STRUT	VT-3	NS*	642-134
F1.SN	1E12-H0416	MECHANICAL SNUBBER	VT-3	2	642-134
F2.SP	1E12-H0417	VARIABLE SPRING	VT-3	NS	642-134
F1.SN	1E12-H0418	MECHANICAL SNUBBER	VT-3	NS	642-134
F1.SN	1E12-H0419	MECHANICAL SNUBBER	VT-3	NS	642-134
F2.SP	1E12-H0420	VARIABLE SPRING	VT-3	NS*	643-120
F2.SN	1E12-H0421	MECHANICAL SNUBBER	VT-3	2*	643-120
F2.SN	1E12-H0422	MECHANICAL SNUBBER	VT-3	NS*	643-119
F2.SN	1E12-H0423	MECHANICAL SNUBBER (WA)	VT-3	NS*	643-119
F2.SN	1E12-H0424	MECHANICAL SNUBBER	VT-3	NS	643-120
F2.SN	1E12-H0425	MECHANICAL SNUBBER	VT-3	NS	643-120
F2.SP	1E12-H0426	VARIABLE SPRING	VT-3	2	643-120
F2.SN	1E12-H0427	MECHANICAL SNUBBER	VT-3	NS	643-120
F2.SN	1E12-H0428	MECHANICAL SNUBBER	VT-3	NS	643-120
F2.SN	1E12-H0430	MECHANICAL SNUBBER	VT-3	NS	642-134
F2.ST	1E12-H0432	RIGID STRUT	VT-3	NS	642-112
F2.SP	1E12-H0433	VARIABLE SPRING	VT-3	NS	642-111
1E12-H0435 TO H0441 DELETED IAW DCP 98-0024					
F2.ST	1E12-H0443	RIGID STRUT	VT-3	1	643-102
F2.SP	1E12-H0444	VARIABLE SPRING	VT-3	NS	643-102
F2.ST	1E12-H0445	RIGID STRUT	VT-3	NS	643-102
F2.Gs	1E12-H0446	RIGID GUIDE (WA < .75")	VT-3	NS	643-102
F2.SN	1E12-H0447	MECHANICAL SNUBBER (TANDEM)	VT-3	NS	643-102
F2.SP	1E12-H0448	VARIABLE SPRING	VT-3	NS	643-102
F2.SN	1E12-H0449	MECHANICAL SNUBBER	VT-3	NS	643-104
F2.Gs	1E12-H0450	RIGID GUIDE (WA < .75")	VT-3	NS	643-104
F2.SP	1E12-H0451	VARIABLE SPRING (WA) (TANDEM)	VT-3	NS	641-104
F2.Gs	1E12-H0454	RIGID GUIDE	VT-3	NS	641-109
F2.SN	1E12-H0455	MECHANICAL SNUBBER	VT-3	NS	641-109
F2.ST	1E12-H0456	RIGID STRUT	VT-3	NS	641-110
1E12-H0457 TO H0462 DELETED IAW DCP 98-0024					

ITEM NO.	MARK NO.	COMPONENT DESCRIPTION	EXAM METHOD	PERIOD SCHED.	ISI ISO SS-305-
		EXAMINATION CATEGORY: F-A			
F2.A	1E12-H0463	ANCHOR (WA)	VT-3	NS	641-110
F2.SP	1E12-H0464	VARIABLE SPRING (WA)	VT-3	NS	641-109
F2.Gs	1E12-H0465	RIGID GUIDE	VT-3	1	641-110
F2.SN	1E12-H0466	MECHANICAL SNUBBER (TANDEM)	VT-3	NS	641-110
1E12-H0467 AND H0468 DELETED IAW DCP 98-0024					
F2.SP	1E12-H0469	VARIABLE SPRING	VT-3	NS	641-110
F2.ST	1E12-H0470	RIGID STRUT	VT-3	2	641-110
F2.SP	1E12-H0471	VARIABLE SPRING	VT-3	NS	641-110
F2.ST	1E12-H0472	RIGID STRUT	VT-3	NS	643-102
F2.ST	1E12-H0473	RIGID STRUT	VT-3	NS	641-110
F1.G	1E12-H0474	RIGID GUIDE	VT-3	NS	642-144
F2.ST	1E12-H0475	RIGID STRUT (WA)	VT-3	NS	642-121
F1.G	1E12-H0476	RIGID GUIDE	VT-3	NS	642-140
F1.SP	1E12-H0478	VARIABLE SPRING	VT-3	NS	642-145
F2.ST	1E12-H0482	RIGID STRUT	VT-3	NS*	643-112
F2.ST	1E12-H0483	RIGID STRUT	VT-3	NS*	641-107
F2.SN	1E12-H0484	MECHANICAL SNUBBER (WA)	VT-3	NS	642-129
F2.SN	1E12-H0485	MECHANICAL SNUBBER	VT-3	NS	642-129
F2.SN	1E12-H0486	MECHANICAL SNUBBER	VT-3	NS	642-129
F2.SP	1E12-H0487	VARIABLE SPRING	VT-3	NS	642-129
F2.SN	1E12-H0488	MECHANICAL SNUBBER (WA)	VT-3	NS	642-129
F2.R	1E12-H0489	RIGID SUPPORT (WA)	VT-3	NS	642-130
F2.SN	1E12-H0490	HYDRAULIC SNUBBER	VT-3	NS	642-130
F2.SN	1E12-H0491	HYDRAULIC SNUBBER	VT-3	NS	642-130
F2.SN	1E12-H0492	MECHANICAL SNUBBER	VT-3	NS*	642-123
F2.R	1E12-H0493	RIGID ROD	VT-3	NS*	642-123
F2.SN	1E12-H0496	MECHANICAL SNUBBER	VT-3	NS	641-106
F2.SN	1E12-H0497	MECHANICAL SNUBBER	VT-3	NS	641-106
F2.SN	1E12-H0498	MECHANICAL SNUBBER (TANDEM)	VT-3	NS	641-106
F2.SP	1E12-H0499	VARIABLE SPRING	VT-3	3	641-106
F2.SN	1E12-H0500	MECHANICAL SNUBBER	VT-3	NS	641-106
F2.SN	1E12-H0501	MECHANICAL SNUBBER	VT-3	NS	641-106
F2.SN	1E12-H0502	MECHANICAL SNUBBER	VT-3	2	641-106
F2.SN	1E12-H0503	MECHANICAL SNUBBER	VT-3	NS	641-119
F2.ST	1E12-H0504	RIGID STRUT	VT-3	NS	641-119
F2.SP	1E12-H0505	VARIABLE SPRING (TANDEM)	VT-3	NS	641-119
F2.SN	1E12-H0506	MECHANICAL SNUBBER (TANDEM)	VT-3	NS	641-109

ITEM NO.	MARK NO.	COMPONENT DESCRIPTION	EXAM METHOD	PERIOD SCHED.	ISI ISO SS-305-
		EXAMINATION CATEGORY: F-A			
F2.SN	1E12-H0510	MECHANICAL SNUBBER	VT-3	NS*	641-105
F2.SN	1E12-H0511	MECHANICAL SNUBBER	VT-3	NS*	641-103
F2.SN	1E12-H0512	MECHANICAL SNUBBER	VT-3	NS*	641-103
F2.SN	1E12-H0513	MECHANICAL SNUBBER	VT-3	NS*	641-103
F2.SP	1E12-H0514	VARIABLE SPRING	VT-3	NS*	641-105
F2.SN	1E12-H0526	MECHANICAL SNUBBER	VT-3	NS	641-105
F2.SP	1E12-H0527	VARIABLE SPRING (WA < .75")	VT-3	NS	641-105
F2.SN	1E12-H0528	MECHANICAL SNUBBER	VT-3	NS	641-105
F2.SP	1E12-H0529	VARIABLE SPRING (WA)	VT-3	NS	641-106
F2.SN	1E12-H0533	MECHANICAL SNUBBER (WA <.75")	VT-3	NS	641-105
F2.SP	1E12-H0534	VARIABLE SPRING (TANDEM)	VT-3	NS	643-114
F2.SN	1E12-H0535	MECHANICAL SNUBBER	VT-3	NS	643-114
F2.SP	1E12-H0536	VARIABLE SPRING	VT-3	NS	643-105
F2.SN	1E12-H0545	MECHANICAL SNUBBER	VT-3	NS*	643-111
F2.SN	1E12-H0546	MECHANICAL SNUBBER	VT-3	NS*	643-111
F2.SP	1E12-H0547	VARIABLE SPRING	VT-3	NS*	643-111
F2.SP	1E12-H0548	VARIABLE SPRING	VT-3	NS	643-110
F2.ST	1E12-H0549	RIGID STRUT	VT-3	NS	643-110
F2.SP	1E12-H0550	VARIABLE SPRING	VT-3	NS	643-110
F2.SN	1E12-H0551	MECHANICAL SNUBBER	VT-3	NS	643-109
F2.SP	1E12-H0552	VARIABLE SPRING	VT-3	NS	643-109
F2.SP	1E12-H0553	VARIABLE SPRING	VT-3	NS	643-109
F2.SN	1E12-H0554	MECHANICAL SNUBBER	VT-3	NS	643-109
F2.SN	1E12-H0555	MECHANICAL SNUBBER	VT-3	NS	643-109
F2.SN	1E12-H0556	MECHANICAL SNUBBER (TANDEM)	VT-3	3	643-109
F2.SN	1E12-H0557	MECHANICAL SNUBBER	VT-3	NS	643-109
F2.SN	1E12-H0558	MECHANICAL SNUBBER	VT-3	NS	643-109
F2.SP	1E12-H0559	VARIABLE SPRING	VT-3	1	642-136
F2.SN	1E12-H0560	MECHANICAL SNUBBER (TANDEM)	VT-3	NS	642-136
F2.SN	1E12-H0561	MECHANICAL SNUBBER	VT-3	2	642-136
F2.ST	1E12-H0562	RIGID STRUT (WA < .75")	VT-3	2	643-110
F2.ST	1E12-H0563	RIGID STRUT	VT-3	NS	643-110
F2.ST	1E12-H0564	RIGID STRUT	VT-3	NS*	643-111
F2.SN	1E12-H0565	MECHANICAL SNUBBER (TANDEM)	VT-3	3*	643-109
F2.SP	1E12-H0566	VARIABLE SPRING	VT-3	NS*	643-109
F2.SN	1E12-H0567	MECHANICAL SNUBBER	VT-3	NS*	643-109
F2.SN	1E12-H0569	MECHANICAL SNUBBER	VT-3	NS	643-105
F2.SN	1E12-H0570	MECHANICAL SNUBBER	VT-3	NS	643-114
F2.SN	1E12-H0571	MECHANICAL SNUBBER	VT-3	NS	643-105

ITEM NO.	MARK NO.	COMPONENT DESCRIPTION	EXAM METHOD	PERIOD SCHED.	ISI ISO SS-305-
		EXAMINATION CATEGORY: F-A			
F2.ST	1E12-H0572	RIGID STRUT	VT-3	NS	643-105
F3.ST	1E12-H0573	RIGID STRUT (WA)	VT-3	NS	642-149
F2.A	1E12-H0611	ANCHOR (WA)	VT-3	NS*	641-114
F2.STm	1E12-H0614	RIGID STRUT	VT-3	NS*	643-110
F2.SP	1E12-H0615	VARIABLE SPRING	VT-3	NS	643-109
F2.SN	1E12-H0616	MECHANICAL SNUBBER	VT-3	NS	643-109
F2.SN	1E12-H0617	MECHANICAL SNUBBER (WA)	VT-3	NS*	643-110
F2.ST	1E12-H0618	RIGID STRUT	VT-3	NS	643-114
F2.A	1E12-H0620	ANCHOR (WA < .75")	VT-3	NS*	643-111
F3.ST	1E12-H0624	RIGID STRUT	VT-3	2	642-149
F3.ST	1E12-H0626	RIGID STRUT	VT-3	NS	642-149
F1.ST	1E12-H0633	RIGID STRUT	VT-3	2	642-122
F2.ST	1E12-H0635	RIGID STRUT	VT-3	NS*	642-132
F1.R	1E12-H0639	RIGID ROD	VT-3	NS	642-143
F1.ST	1E12-H0641	RIGID STRUT	VT-3	NS	642-142
F1.ST	1E12-H0642	RIGID STRUT	VT-3	NS	642-142
F1.ST	1E12-H0643	RIGID STRUT (TANDEM)	VT-3	NS	642-143
F1.ST	1E12-H0644	RIGID STRUT (TANDEM)	VT-3	NS	642-143
F2.ST	1E12-H0646	RIGID STRUT	VT-3	NS*	642-108
F1.G	1E12-H0648	RIGID GUIDE	VT-3	2	642-122
F2.ST	1E12-H0649	RIGID STRUT	VT-3	1*	642-122
F2.ST	1E12-H0650	RIGID STRUT	VT-3	NS*	642-122
F2.ST	1E12-H0651	RIGID STRUT	VT-3	NS*	642-122
F1.SN	1E12-H0652	MECHANICAL SNUBBER	VT-3	2	642-137
F1.SN	1E12-H0653	MECHANICAL SNUBBER	VT-3	NS	642-137
F1.ST	1E12-H0654	RIGID STRUT	VT-3	NS	642-139
F2.ST	1E12-H0657	RIGID STRUT	VT-3	NS	642-138
F2.ST	1E12-H0658	RIGID STRUT	VT-3	NS	642-138
F1.SN	1E12-H0660	MECHANICAL SNUBBER (TANDEM)	VT-3	1	642-137
F2.SP	1E12-H0661	VARIABLE SPRING	VT-3	3	642-137
F2.ST	1E12-H0662	RIGID STRUT	VT-3	3*	641-108
F2.ST	1E12-H0663	RIGID STRUT	VT-3	NS*	641-108
F2.ST	1E12-H0665	RIGID STRUT	VT-3	2	641-104
F2.SN	1E12-H0666	MECHANICAL SNUBBER	VT-3	NS	641-104
F2.SP	1E12-H0667	VARIABLE SPRING	VT-3	NS	641-106
F2.SP	1E12-H0670	VARIABLE SPRING (WA)	VT-3	NS	642-137
F1.SN	1E12-H0671	MECHANICAL SNUBBER (TANDEM)	VT-3	NS	642-141
F2.ST	1E12-H0673	RIGID STRUT	VT-3	NS	642-127
F1.SP	1E12-H0675	VARIABLE SPRING	VT-3	NS	642-141
F2.G	1E12-H0676	RIGID GUIDE	VT-3	NS*	641-103

ITEM NO.	MARK NO.	COMPONENT DESCRIPTION	EXAM METHOD	PERIOD SCHED.	ISI ISO SS-305-
		EXAMINATION CATEGORY: F-A			
F2.Gs	1E12-H0677	RIGID GUIDE	VT-3	NS*	641-103
F2.ST	1E12-H0678	RIGID STRUT	VT-3	NS*	641-103
F2.SN	1E12-H0679	MECHANICAL SNUBBER	VT-3	NS*	641-103
F2.SN	1E12-H0680	MECHANICAL SNUBBER	VT-3	NS*	641-103
F2.SN	1E12-H0681	MECHANICAL SNUBBER	VT-3	3*	641-103
F2.SN	1E12-H0682	MECHANICAL SNUBBER	VT-3	NS*	641-103
F2.ST	1E12-H0683	RIGID STRUT	VT-3	NS	641-102
F2.ST	1E12-H0684	RIGID STRUT	VT-3	NS*	641-107
F2.Gs	1E12-H0685	RIGID GUIDE	VT-3	NS*	641-103
F2.Gs	1E12-H0687	RIGID GUIDE	VT-3	NS*	641-115
F2.ST	1E12-H0688	RIGID STRUT	VT-3	NS*	643-110
F2.ST	1E12-H0689	RIGID STRUT	VT-3	NS	641-104
F2.ST	1E12-H0690	RIGID STRUT	VT-3	NS	641-104
	1E12-H0691	DELETED IAW DCP 98-0024			
F1.R	1E12-H0692	RIGID SUPPORT	VT-3	NS	642-139
F2.G	1E12-H0693	RIGID GUIDE	VT-3	3	642-137
F3.SN	1E12-H0694	MECHANICAL SNUBBER	VT-3	3	642-149
F1.Gs	1E12-H0695	RIGID GUIDE	VT-3	NS	642-139
F3.ST	1E12-H0698	RIGID STRUT	VT-3	NS	642-149
F3.SN	1E12-H0699	MECHANICAL SNUBBER	VT-3	NS	642-149
F2.STm	1E12-H0702	RIGID STRUT	VT-3	NS*	642-121
F2.STm	1E12-H0703	RIGID STRUT	VT-3	NS*	642-121
F2.ST	1E12-H0707	RIGID STRUT	VT-3	NS	643-115
F2.ST	1E12-H0708	RIGID STRUT (WA)	VT-3	3	643-117
F2.SP	1E12-H0709	VARIABLE SPRING	VT-3	2*	643-116
F2.SN	1E12-H0710	MECHANICAL SNUBBER	VT-3	2*	642-111
F2.SP	1E12-H0711	VARIABLE SPRING	VT-3	NS*	642-111
F2.SN	1E12-H0712	MECHANICAL SNUBBER	VT-3	NS*	642-111
F2.ST	1E12-H0713	RIGID STRUT	VT-3	NS	642-111
F2.ST	1E12-H0714	RIGID STRUT	VT-3	1	642-111
F2.ST	1E12-H0717	RIGID STRUT	VT-3	NS*	642-133
F2.ST	1E12-H0718	RIGID STRUT	VT-3	3*	642-133
F2.ST	1E12-H0719	RIGID STRUT	VT-3	NS	642-133
F2.ST	1E12-H0720	RIGID STRUT (WA < .75")	VT-3	NS	642-133
F2.R	1E12-H0721	RIGID SUPPORT (WA < .75")	VT-3	NS	642-121
F2.ST	1E12-H0723	RIGID STRUT (WA < .75")	VT-3	NS*	642-133
F2.ST	1E12-H0724	RIGID STRUT (WA < .75")	VT-3	NS*	642-121
F1.SN	1E12-H0726	HYDRAULIC SNUBBER	VT-3	3	642-141
F2.ST	1E12-H0727	RIGID STRUT	VT-3	1*	641-119
F2.SN	1E12-H0729	MECHANICAL SNUBBER	VT-3	1	642-101

ITEM NO.	MARK NO.	COMPONENT DESCRIPTION	EXAM METHOD	PERIOD SCHED.	ISI ISO SS-305-
		EXAMINATION CATEGORY: F-A			
F2.SN	1E12-H0730	MECHANICAL SNUBBER (WA < .75")	VT-3	NS	642-103
F2.SN	1E12-H0731	MECHANICAL SNUBBER (WA)	VT-3	NS	642-101
F2.SP	1E12-H0732	VARIABLE SPRING	VT-3	NS	642-101
F2.ST	1E12-H0733	RIGID STRUT	VT-3	NS	642-101
F2.SN	1E12-H0734	MECHANICAL SNUBBER	VT-3	1	642-134
F1.SP	1E12-H0735	VARIABLE SPRING	VT-3	NS	642-134
F1.SN	1E12-H0736	MECHANICAL SNUBBER	VT-3	1	642-134
F2.SN	1E12-H0737	MECHANICAL SNUBBER	VT-3	NS	643-120
F2.SN	1E12-H0738	MECHANICAL SNUBBER	VT-3	NS	643-120
F1.ST	1E12-H0739	RIGID STRUT	VT-3	NS	642-125
F1.ST	1E12-H0740	RIGID STRUT	VT-3	NS	642-125
F1.SN	1E12-H0741	MECHANICAL SNUBBER (TANDEM)	VT-3	NS	642-125
F2.SN	1E12-H0747	MECHANICAL SNUBBER	VT-3	2	642-132
F1.Gs	1E12-H0748	RIGID GUIDE	VT-3	3	642-141
F1.SN	1E12-H0749	MECHANICAL SNUBBER	VT-3	NS	642-141
F1.SN	1E12-H0750	MECHANICAL SNUBBER	VT-3	NS	642-141
F2.SN	1E12-H0751	MECHANICAL SNUBBER	VT-3	NS*	642-132
F2.SN	1E12-H0752	MECHANICAL SNUBBER	VT-3	NS*	642-132
	1E12-H0763	DELETED IAW DCP 98-0024			
F1.SN	1E12-H0764	MECHANICAL SNUBBER	VT-3	NS	642-145
F1.SN	1E12-H0765	MECHANICAL SNUBBER	VT-3	2	642-145
F1.SN	1E12-H0766	MECHANICAL SNUBBER (TANDEM)	VT-3	NS	642-145
F1.Gs	1E12-H0767	RIGID GUIDE	VT-3	NS	642-145
F2.SN	1E12-H0769	HYDRAULIC SNUBBER	VT-3	NS	642-102
F2.SN	1E12-H0770	MECHANICAL SNUBBER	VT-3	NS	642-126
F2.SN	1E12-H0771	MECHANICAL SNUBBER	VT-3	NS	642-126
F2.SN	1E12-H0772	MECHANICAL SNUBBER	VT-3	3	642-126
F2.SN	1E12-H0774	MECHANICAL SNUBBER	VT-3	NS	641-112
F1.SN	1E12-H0777	MECHANICAL SNUBBER	VT-3	NS	642-142
F2.SN	1E12-H0779	MECHANICAL SNUBBER	VT-3	NS*	643-108
F2.SN	1E12-H0780	MECHANICAL SNUBBER	VT-3	NS*	641-114
F2.SN	1E12-H0781	MECHANICAL SNUBBER	VT-3	NS*	643-111
F2.SN	1E12-H0782	MECHANICAL SNUBBER (TANDEM)	VT-3	NS*	643-111
F1.ST	1E12-H0786	RIGID STRUT	VT-3	3	642-125
F2.SN	1E12-H0787	MECHANICAL SNUBBER	VT-3	3	642-132
F2.SN	1E12-H0788	MECHANICAL SNUBBER	VT-3	NS*	642-119
F2.G	1E12-H0789	RIGID GUIDE	VT-3	NS	642-101
F2.SN	1E12-H0790	HYDRAULIC SNUBBER AND RIGID STRUT	VT-3	NS	641-105
F2.G	1E12-H1098	RIGID GUIDE	VT-3	NS*	641-107
F2.A	1E12-H1099	ANCHOR (WA)	VT-3	NS*	641-107
F2.G	1E12-H1100	RIGID GUIDE	VT-3	NS*	641-105

ITEM NO.	MARK NO.	COMPONENT DESCRIPTION	EXAM METHOD	PERIOD SCHED.	ISI ISO SS-305-
		EXAMINATION CATEGORY: F-A			
F2.G	1E12-H1101	RIGID GUIDE	VT-3	NS*	641-105
F2.SP	1E12-H1102	VARIABLE SPRING	VT-3	NS*	641-105
F1.SN	1E12-H5000	MECHANICAL SNUBBER (TANDEM)	VT-3	NS	642-143
F1.SN	1E12-H5001	MECHANICAL SNUBBER	VT-3	NS	642-135
F2.SN	1E12-H5002	MECHANICAL SNUBBER	VT-3	NS	642-138
F2.Gs	1E12-H6000	RIGID GUIDE	VT-3	2*	643-116
F2.A	1E12-P102-SP	ANCHOR (WA)	VT-3	NS	642-107
F2.A	1E12-P105-SP	ANCHOR (WA)	VT-3	NS	642-121
F2.A	1E12-P113-SP	ANCHOR (WA)	VT-3	NS	642-126
F2.A	1E12-P402-SP	ANCHOR (WA)	VT-3	NS	642-116
F2.A	1E12-P403-SP	ANCHOR (WA)	VT-3	NS	642-112
F2.A	1E12-P407-SP	ANCHOR (WA)	VT-3	3	642-133
F1.A	1E12-P411-SP	ANCHOR (WA)	VT-3	NS	642-135
F2.A	1E12-P412-SP	ANCHOR (WA)	VT-3	NS	642-137
F1.A	1E12-P421-SP	ANCHOR (WA)	VT-3	NS	642-101
F2.E	1E12-P102-SP1	RIGID GUIDE (INSIDE PENETRATION GUARD PIPE)	VT-3	NS	642-107
F2.E	1E12-P402-SP1	RIGID GUIDE (INSIDE PENETRATION GUARD PIPE)	VT-3	NS	642-116
F2.E	1E12-P403-SP1	RIGID GUIDE (INSIDE PENETRATION GUARD PIPE)	VT-3	NS	642-112
F1.E	1E12-P421-SP1	RIGID GUIDE (INSIDE PENETRATION GUARD PIPE)	VT-3	NS	642-117
F1.A	1E12-PRB2035-SP	ANCHOR (WA)	VT-3	2	642-143
F1.A	1E12-PRB2036-SP	ANCHOR (WA)	VT-3	NS	642-139
F1.A	1E12-PRB2044-SP	ANCHOR (WA)	VT-3	NS	642-126
F1.40	1E21-C001-SP1	PUMP SUPPORT, ANCHOR	VT-3	2	705-113
F1.40	1E21-C001-SP2	PUMP BARREL SUPPORT (WA)	VT-3	SR	705-113
F1.40	1E21-C001-SP3	PUMP BARREL SUPPORT (WA)	VT-3	SR	705-113
F1.40	1E21-C001-SP4	PUMP BARREL GUIDE PIN (WA)	VT-3	SR	705-113
F1.SN	1E21-H0001	HYDRAULIC SNUBBER	VT-3	NS	705-111
F1.SN	1E21-H0002	HYDRAULIC SNUBBER	VT-3	NS	705-111
F1.SP	1E21-H0003	VARIABLE SPRING	VT-3	NS	705-111
F1.SN	1E21-H0004	MECHANICAL SNUBBER	VT-3	2	705-111
F1.ST	1E21-H0005	RIGID STRUT	VT-3	3	705-111
F1.SP	1E21-H0006	VARIABLE SPRING	VT-3	NS	705-111
F1.SN	1E21-H0007	MECHANICAL SNUBBER	VT-3	NS	705-109
F1.SN	1E21-H0008	MECHANICAL SNUBBER	VT-3	NS	705-109
F1.SP	1E21-H0009	VARIABLE SPRING (TANDEM)	VT-3	NS	705-109
F1.SP	1E21-H0010	VARIABLE SPRING (TANDEM)	VT-3	2	705-109
F1.SN	1E21-H0011	MECHANICAL SNUBBER	VT-3	NS	705-109
F1.SN	1E21-H0012	MECHANICAL SNUBBER	VT-3	NS	705-109
F1.SP	1E21-H0013	VARIABLE SPRING	VT-3	NS	705-109
F1.SP	1E21-H0014	VARIABLE SPRING	VT-3	NS	705-109

ITEM NO.	MARK NO.	COMPONENT DESCRIPTION	EXAM METHOD	PERIOD SCHED.	ISI ISO SS-305-
		EXAMINATION CATEGORY: F-A			
F1.SN	1E21-H0015	MECHANICAL SNUBBER	VT-3	1	705-109
F1.SN	1E21-H0016	MECHANICAL SNUBBER	VT-3	NS	705-109
F2.R	1E21-H0020	RIGID ROD (WA)	VT-3	NS	705-102
F2.ST	1E21-H0021	RIGID STRUT	VT-3	NS	705-102
Component support 1E21-H0022 was removed under ECP 04-0270.					
F2.A	1E21-H0023	ANCHOR (WA)	VT-3	3	705-103
F2.ST	1E21-H0024	RIGID STRUT	VT-3	NS	705-102
F2.SP	1E21-H0025	VARIABLE SPRING	VT-3	2	705-102
F2.SN	1E21-H0026	MECHANICAL SNUBBER (WA <.75")	VT-3	3	705-101
F2.SP	1E21-H0027	VARIABLE SPRING	VT-3	NS	705-101
F2.SN	1E21-H0028	MECHANICAL SNUBBER	VT-3	NS	705-101
F2.SP	1E21-H0029	VARIABLE SPRING	VT-3	NS	705-101
F2.SN	1E21-H0030	MECHANICAL SNUBBER (TANDEM)	VT-3	NS	705-101
F2.SP	1E21-H0031	VARIABLE SPRING	VT-3	NS	705-101
F2.ST	1E21-H0032	RIGID STRUT	VT-3	NS	705-101
F2.R	1E21-H0035	RIGID ROD (WA)	VT-3	1	705-104
F2.SP	1E21-H0036	VARIABLE SPRING	VT-3	NS	705-104
F2.SN	1E21-H0038	HYDRAULIC SNUBBER	VT-3	NS	705-104
F2.SN	1E21-H0039	HYDRAULIC SNUBBER	VT-3	NS	705-104
F2.SN	1E21-H0040	MECHANICAL SNUBBER	VT-3	NS	705-105
F2.SP	1E21-H0041	VARIABLE SPRING	VT-3	NS	705-105
F2.SN	1E21-H0042	MECHANICAL SNUBBER	VT-3	NS	705-105
F2.A	1E21-H0043	ANCHOR (WA)	VT-3	NS	705-106
F2.SN	1E21-H0050	HYDRAULIC SNUBBER (TANDEM)	VT-3	NS	705-101
F2.SP	1E21-H0051	VARIABLE SPRING	VT-3	NS	705-102
F2.SN	1E21-H0053	HYDRAULIC SNUBBER	VT-3	1	705-104
F1.SP	1E21-H0058	VARIABLE SPRING	VT-3	NS	705-108
F1.SN	1E21-H0060	MECHANICAL SNUBBER	VT-3	NS	705-108
F1.SN	1E21-H0061	MECHANICAL SNUBBER	VT-3	NS	705-108
F1.SN	1E21-H0062	MECHANICAL SNUBBER	VT-3	3	705-108
F1.SN	1E21-H0063	MECHANICAL SNUBBER	VT-3	NS	705-108
F2.SP	1E21-H0064	VARIABLE SPRING	VT-3	1	705-108
F2.SN	1E21-H0065	MECHANICAL SNUBBER	VT-3	NS	705-108
F2.SN	1E21-H0066	MECHANICAL SNUBBER	VT-3	2	705-107
F2.SN	1E21-H0067	MECHANICAL SNUBBER	VT-3	NS	705-107
F2.SN	1E21-H0079	MECHANICAL SNUBBER	VT-3	NS*	705-101
F2.ST	1E21-H0080	RIGID STRUT (WA <.75")	VT-3	3	705-101
F2.SN	1E21-H0084	MECHANICAL SNUBBER	VT-3	NS*	705-108
F2.SP	1E21-H0085	VARIABLE SPRING	VT-3	NS*	705-108

ITEM NO.	MARK NO.	COMPONENT DESCRIPTION	EXAM METHOD	PERIOD SCHED.	ISI ISO SS-305-
		EXAMINATION CATEGORY: F-A			
Component support 1E21-H0087 was removed under ECP 04-0270.					
F1.SP	1E21-H0089	VARIABLE SPRING	VT-3	3	705-108
F2.SN	1E21-H0096	MECHANICAL SNUBBER	VT-3	NS	705-108
F2.E	1E21-P103-SP1	RIGID GUIDE (INSIDE PENETRATION GUARD PIPE)	VT-3	NS	705-101
F2.A	1E21-P103-SP	ANCHOR (WA)	VT-3	NS	705-101
F1.A	1E21-P112-SP	ANCHOR (WA)	VT-3	1	705-109
F1.A	1E21-PRB3046-SP	ANCHOR (WA)	VT-3	NS	705-110
F1.40	1E22-C001-SP1	PUMP SUPPORT, ANCHOR	VT-3	2	701-114
F1.40	1E22-C001-SP2	PUMP BARREL SUPPORT (WA)	VT-3	SR	701-114
F1.40	1E22-C001-SP3	PUMP BARREL SUPPORT (WA)	VT-3	SR	701-114
F3.A	1E22-D008-SP	EXHAUST SILENCER SUPPORT (WA)	VT-3	NS	355-101
F1.SN	1E22-H0001	HYDRAULIC SNUBBER	VT-3	NS	701-111
F1.SN	1E22-H0002	HYDRAULIC SNUBBER	VT-3	NS	701-111
F1.SP	1E22-H0003	VARIABLE SPRING	VT-3	NS	701-111
F1.ST	1E22-H0004	RIGID STRUT	VT-3	2	701-111
F1.SN	1E22-H0005	MECHANICAL SNUBBER	VT-3	3	701-111
F1.SP	1E22-H0006	VARIABLE SPRING	VT-3	3	701-111
F1.SN	1E22-H0007	MECHANICAL SNUBBER	VT-3	NS	701-109
F1.SN	1E22-H0008	MECHANICAL SNUBBER	VT-3	NS	701-109
F1.SP	1E22-H0009	VARIABLE SPRING	VT-3	1	701-109
F1.SN	1E22-H0010	MECHANICAL SNUBBER	VT-3	NS	701-109
F1.SN	1E22-H0011	MECHANICAL SNUBBER	VT-3	NS	701-109
F1.SN	1E22-H0015	MECHANICAL SNUBBER	VT-3	NS	701-109
F1.SP	1E22-H0016	VARIABLE SPRING (TANDEM)	VT-3	NS	701-109
F1.SN	1E22-H0017	MECHANICAL SNUBBER	VT-3	1	701-109
F2.SP	1E22-H0025	VARIABLE SPRING	VT-3	NS	701-103
F2.ST	1E22-H0026	RIGID STRUT	VT-3	NS	701-103
F2.ST	1E22-H0027	RIGID STRUT (WA)	VT-3	NS	701-102
F2.SP	1E22-H0028	VARIABLE SPRING	VT-3	NS	701-102
F2.ST	1E22-H0029	RIGID STRUT (TANDEM)	VT-3	2	701-102
F2.ST	1E22-H0030	RIGID STRUT	VT-3	NS	701-102
F2.R	1E22-H0031	RIGID SUPPORT	VT-3	NS	701-102
F2.SN	1E22-H0032	MECHANICAL SNUBBER	VT-3	NS	701-102
F2.R	1E22-H0033	RIGID SUPPORT	VT-3	NS	701-102
F2.SN	1E22-H0034	MECHANICAL SNUBBER	VT-3	1	701-102
F2.R	1E22-H0036	RIGID SUPPORT	VT-3	NS	701-102
F2.SN	1E22-H0037	MECHANICAL SNUBBER	VT-3	NS	701-102
F2.SN	1E22-H0038	MECHANICAL SNUBBER (WA)	VT-3	NS	701-101
F2.SP	1E22-H0039	VARIABLE SPRING (WA < .75")	VT-3	3	701-101

ITEM NO.	MARK NO.	COMPONENT DESCRIPTION	EXAM METHOD	PERIOD SCHED.	ISI ISO SS-305-
		EXAMINATION CATEGORY: F-A			
F2.ST	1E22-H0041	RIGID STRUT	VT-3	NS	701-101
F2.SP	1E22-H0042	VARIABLE SPRING (WA < .75")	VT-3	NS	701-103
F2.Gs	1E22-H0043	RIGID GUIDE	VT-3	3	701-103
F2.ST	1E22-H0044	RIGID STRUT	VT-3	NS	701-104
F2.SP	1E22-H0045	VARIABLE SPRING (TANDEM)	VT-3	NS	701-104
F2.SN	1E22-H0047	MECHANICAL SNUBBER	VT-3	NS	701-104
F2.ST	1E22-H0048	RIGID STRUT	VT-3	NS	701-104
F2.ST	1E22-H0049	RIGID STRUT	VT-3	NS	701-104
F2.ST	1E22-H0050	RIGID STRUT	VT-3	NS	701-105
F2.ST	1E22-H0051	RIGID STRUT	VT-3	1	701-105
F2.ST	1E22-H0052	RIGID STRUT	VT-3	NS	701-105
F2.SN	1E22-H0053	MECHANICAL SNUBBER	VT-3	NS	701-105
F2.SN	1E22-H0054	MECHANICAL SNUBBER (WA)	VT-3	NS	701-105
F2.ST	1E22-H0055	RIGID STRUT	VT-3	NS	701-106
F2.SP	1E22-H0056	VARIABLE SPRING	VT-3	NS	701-106
F2.SN	1E22-H0057	MECHANICAL SNUBBER	VT-3	3	701-106
F2.ST	1E22-H0058	RIGID STRUT	VT-3	NS	701-106
F2.SP	1E22-H0059	VARIABLE SPRING (TANDEM)	VT-3	NS	701-106
F2.SN	1E22-H0060	MECHANICAL SNUBBER	VT-3	NS	701-106
F2.Gs	1E22-H0061	RIGID GUIDE	VT-3	NS	701-106
F2.R	1E22-H0062	RIGID SUPPORT (WA)	VT-3	1	701-107
F2.ST	1E22-H0063	RIGID STRUT	VT-3	3	701-107
F2.SN	1E22-H0064	MECHANICAL SNUBBER	VT-3	NS	701-108
F2.ST	1E22-H0065	RIGID STRUT	VT-3	NS	701-108
F2.SN	1E22-H0066	MECHANICAL SNUBBER (TANDEM)	VT-3	NS	701-108
F2.SP	1E22-H0069	VARIABLE SPRING	VT-3	NS	701-108
F2.SN	1E22-H0070	MECHANICAL SNUBBER	VT-3	2	701-108
F2.SP	1E22-H0071	VARIABLE SPRING	VT-3	2	701-105
F2.ST	1E22-H0072	RIGID STRUT	VT-3	NS	701-105
F2.ST	1E22-H0073	RIGID STRUT	VT-3	NS	701-105
F2.ST	1E22-H0078	RIGID STRUT	VT-3	NS	701-105
F2.SP	1E22-H0079	VARIABLE SPRING	VT-3	NS	701-105
F2.Gs	1E22-H0080	RIGID GUIDE	VT-3	NS	701-105
F2.SN	1E22-H0081	MECHANICAL SNUBBER	VT-3	NS	701-105
F2.Gs	1E22-H0082	RIGID GUIDE	VT-3	NS	701-112
F2.ST	1E22-H0083	RIGID STRUT	VT-3	NS	701-112
F2.ST	1E22-H0084	RIGID STRUT	VT-3	NS	701-112
F2.R	1E22-H0085	RIGID SUPPORT (WA)	VT-3	NS	701-112
F2.STm	1E22-H0086	RIGID STRUT	VT-3	NS	701-113

ITEM NO.	MARK NO.	COMPONENT DESCRIPTION	EXAM METHOD	PERIOD SCHED.	ISI ISO SS-305-
		EXAMINATION CATEGORY: F-A			
F2.ST	1E22-H0104	RIGID STRUT	VT-3	NS*	701-102
F2.SN	1E22-H0105	MECHANICAL SNUBBER	VT-3	NS	701-101
F2.SN	1E22-H0107	MECHANICAL SNUBBER (WA) (TANDEM)	VT-3	NS	701-105
F1.SP	1E22-H0117	VARIABLE SPRING	VT-3	NS	701-108
F1.SN	1E22-H0118	MECHANICAL SNUBBER	VT-3	NS	701-108
F1.SN	1E22-H0119	MECHANICAL SNUBBER	VT-3	2	701-108
F2.SP	1E22-H0120	VARIABLE SPRING	VT-3	NS	701-104
F2.SN	1E22-H0122	MECHANICAL SNUBBER	VT-3	NS	701-113
F3.A	1E22-H0132	ANCHOR (WA)	VT-3	2	355-101
F3.ST	1E22-H0133	RIGID STRUT (WA)	VT-3	3	355-101
F3.SN	1E22-H0134	MECHANICAL SNUBBER	VT-3	NS	355-101
F3.SN	1E22-H0135	MECHANICAL SNUBBER	VT-3	NS	355-101
F3.SP	1E22-H0136	VARIABLE SPRING (WA)	VT-3	NS	355-101
F3.Gs	1E22-H0137	RIGID GUIDE	VT-3	NS	355-101
F3.SP	1E22-H0138	VARIABLE SPRING (WA)	VT-3	2	355-101
F3.SP	1E22-H0139	VARIABLE SPRING (WA)	VT-3	NS	355-101
F1.SP	1E22-H0144	VARIABLE SPRING (TANDEM)	VT-3	NS	701-109
F3.A	1E22-H0146	ANCHOR	VT-3	NS	355-101
F2.ST	1E22-H0148	RIGID STRUT	VT-3	NS	701-108
F3.SN	1E22-H5000	MECHANICAL SNUBBER	VT-3	NS	355-101
F1.40	1E22-S001-SP	DIESEL GENERATOR HEAT EXCHANGER SUPPORT (WA)	VT-3	2	791-101
F1.40	1E22-S004A-SP	AIR RECEIVER TANK (A004B) SUPPORT (WA)	VT-3	NS	351-101
F1.40	1E22-S004B-SP	AIR RECEIVER TANK (A004B) SUPPORT (WA)	VT-3	3	351-101
F2.E	1E22-P401-SP1	RIGID GUIDE (INSIDE PENETRATION GUIDE PIPE)	VT-3	NS	701-101
F2.A	1E22-P401-SP	ANCHOR (WA)	VT-3	NS	701-101
F1.A	1E22-P410-SP	ANCHOR (WA)	VT-3	NS	701-109
F1.A	1E22-PRB3052-SP	ANCHOR (WA)	VT-3	NS	701-110
1E32 SUPPORTS DELETED IAW DCP 96-0044					
F1.40	1E51-C001-SP	ANCHOR, PUMP (WA)	VT-3	3	631-109
F1.40	1E51-C002-SP	ANCHOR, TURBINE	VT-3	1	632-103
F1.E	1E51-G202A	RIGID GUIDE (INSIDE PENETRATION GUARD PIPE)	VT-3	NS	632-101
F2.ST	1E51-H0003	RIGID STRUT	VT-3	NS*	631-110
F2.ST	1E51-H0004	RIGID STRUT	VT-3	NS*	631-111
F2.G	1E51-H0005	RIGID GUIDE	VT-3	NS*	631-111
F2.SN	1E51-H0008	MECHANICAL SNUBBER	VT-3	NS	632-103
F2.SP	1E51-H0015	VARIABLE SPRING	VT-3	NS*	631-110
F2.ST	1E51-H0019	RIGID STRUT	VT-3	NS*	631-110

ITEM NO.	MARK NO.	COMPONENT DESCRIPTION	EXAM METHOD	PERIOD SCHED.	ISI ISO SS-305-
		EXAMINATION CATEGORY: F-A			
F2.SP	1E51-H0021	VARIABLE SPRING (TANDEM)	VT-3	NS*	632-103
F2.A	1E51-H0026	ANCHOR (WA)	VT-3	1	632-105
F2.G	1E51-H0028	RIGID GUIDE	VT-3	NS	632-105
F2.ST	1E51-H0029	RIGID STRUT	VT-3	NS	632-105
F2.SP	1E51-H0030	VARIABLE SPRING (TANDEM)	VT-3	NS	631-101
F2.R	1E51-H0031	RIGID SUPPORT	VT-3	NS*	631-111
F2.Gs	1E51-H0032	RIGID GUIDE	VT-3	NS*	631-111
F2.SP	1E51-H0034	VARIABLE SPRING	VT-3	NS*	631-112
F2.ST	1E51-H0035	RIGID STRUT	VT-3	NS*	631-112
F1.ST	1E51-H0037	RIGID STRUT	VT-3	NS	631-106
F1.SP	1E51-H0038	VARIABLE SPRING	VT-3	NS	631-106
F1.ST	1E51-H0039	RIGID STRUT	VT-3	2	631-106
F1.SP	1E51-H0040	VARIABLE SPRING	VT-3	2	631-105
F2.G	1E51-H0041	RIGID GUIDE (WA < .75")	VT-3	NS	631-104
F2.A	1E51-H0042	ANCHOR (WA)	VT-3	NS	631-102
F2.SP	1E51-H0044	VARIABLE SPRING (TANDEM)	VT-3	NS	631-102
F2.ST	1E51-H0045	RIGID STRUT	VT-3	NS	631-102
F2.ST	1E51-H0046	RIGID STRUT	VT-3	NS	631-102
F2.ST	1E51-H0055	RIGID STRUT (WA)	VT-3	NS	632-104
F2.SN	1E51-H0056	MECHANICAL SNUBBER (WA < .75")	VT-3	3	632-104
F2.SN	1E51-H0057	MECHANICAL SNUBBER	VT-3	NS	631-102
F2.SP	1E51-H0058	VARIABLE SPRING (TANDEM)	VT-3	NS	631-102
F1.Gs	1E51-H0071	RIGID GUIDE	VT-3	NS	631-108
F1.SN	1E51-H0072	HYDRAULIC SNUBBER	VT-3	NS	631-108
F1.SN	1E51-H0073	HYDRAULIC SNUBBER	VT-3	1	631-108
F1.SN	1E51-H0074	HYDRAULIC SNUBBER	VT-3	NS	631-108
F1.SP	1E51-H0075	VARIABLE SPRING (TANDEM)	VT-3	NS	631-107
F1.G	1E51-H0076	RIGID GUIDE	VT-3	2	631-107
F1.ST	1E51-H0078	RIGID STRUT	VT-3	NS	631-107
F1.R	1E51-H0079	RIGID SUPPORT	VT-3	NS	631-107
F1.ST	1E51-H0080	RIGID STRUT	VT-3	NS	631-107
F1.ST	1E51-H0081	RIGID STRUT	VT-3	NS	631-107
F1.G	1E51-H0102	RIGID GUIDE (WA)	VT-3	NS	632-101
F1.SP	1E51-H0109	VARIABLE SPRING	VT-3	NS	632-101
F1.SN	1E51-H0110	MECHANICAL SNUBBER	VT-3	NS	632-101
F1.SN	1E51-H0111	MECHANICAL SNUBBER	VT-3	NS	632-101
F1.G	1E51-H0129	RIGID GUIDE	VT-3	NS	632-101
F2.G	1E51-H0131	RIGID GUIDE	VT-3	2	632-103
F2.ST	1E51-H0137	RIGID STRUT	VT-3	2	631-105

ITEM NO.	MARK NO.	COMPONENT DESCRIPTION	EXAM METHOD	PERIOD SCHED.	ISI ISO SS-305-
		EXAMINATION CATEGORY: F-A			
F2.SP	1E51-H0138	VARIABLE SPRING	VT-3	NS	631-103
F2.ST	1E51-H0140	RIGID STRUT	VT-3	NS*	631-110
F2.SP	1E51-H0141	VARIABLE SPRING	VT-3	3	632-102
F1.SP	1E51-H0150	VARIABLE SPRING (WA)	VT-3	NS	631-108
F1.ST	1E51-H0151	RIGID STRUT	VT-3	3	631-107
F2.SN	1E51-H0156	MECHANICAL SNUBBER	VT-3	NS	632-103
F1.Gs	1E51-H5002	RIGID GUIDE	VT-3	NS	632-101
F2.E	1E51-P101-SP1	RIGID GUIDE (INSIDE PENETRATION GUARD PIPE)	VT-3	NS	631-112
F2.E	1E51-P101-SP2	RIGID GUIDE (INSIDE PENETRATION GUARD PIPE)	VT-3	NS	631-112
F1.E	1E51-P123-SP1	RIGID GUIDE (INSIDE PENETRATION GUARD PIPE)	VT-3	NS	631-106
F1.E	1E51-P123-SP2	RIGID GUIDE (INSIDE PENETRATION GUARD PIPE)	VT-3	NS	631-106
F2.A	1E51-P101-SP	ANCHOR (WA)	VT-3	NS	631-112
F1.A	1E51-P123-SP	ANCHOR (WA)	VT-3	3	631-106
F1.A	1E51-P422-SP	ANCHOR (WA)	VT-3	NS	631-102
F1.ST	1G33-H0020	RIGID STRUT	VT-3	2	671-107
F1.ST	1G33-H0024	RIGID STRUT (TANDEM)	VT-3	NS	671-106
F1.ST	1G33-H0025	RIGID STRUT (TANDEM)	VT-3	NS	671-106
F1.ST	1G33-H0027	RIGID STRUT (TANDEM)	VT-3	1	671-106
F1.G	1G33-H0028	RIGID GUIDE	VT-3	2	671-106
F1.ST	1G33-H0029	RIGID STRUT	VT-3	NS	671-106
F1.SP	1G33-H0033	VARIABLE SPRING	VT-3	NS	671-105
F1.SP	1G33-H0078	VARIABLE SPRING	VT-3	1	671-102
F1.SP	1G33-H0079	VARIABLE SPRING (TANDEM)	VT-3	NS	671-102
F1.SP	1G33-H0080	VARIABLE SPRING (WA < .625")	VT-3	NS	671-103
F1.SP	1G33-H0081	VARIABLE SPRING	VT-3	NS	671-103
F1.ST	1G33-H0088	RIGID STRUT	VT-3	NS	671-107
F1.ST	1G33-H0093	RIGID STRUT	VT-3	NS	671-103
F1.ST	1G33-H0094	RIGID STRUT	VT-3	NS	671-102
F1.ST	1G33-H0095	RIGID STRUT	VT-3	NS	671-105
F1.ST	1G33-H0100	RIGID STRUT	VT-3	NS	671-105
F1.50	1G33-H0142	MECHANICAL SNUBBER (AUGMENTED HEPIBER)	VT-3	1	671-104
F1.50	1G33-H0144	MECHANICAL SNUBBER (AUGMENTED HEPIBER)	VT-3	2	671-104
F1.50	1G33-H0145	VARIABLE SPRING (AUGMENTED HEPIBER)	VT-3	2	671-104
F1.50	1G33-H0146	MECHANICAL SNUBBER (AUGMENTED HEPIBER)	VT-3	3	671-104
F1.ST	1G33-H0165	RIGID STRUT	VT-3	NS	671-106
F2.SP	1G33-H0179	VARIABLE SPRING	VT-3	1	672-102
F2.SP	1G33-H0188	VARIABLE SPRING	VT-3	NS	672-101
F2.SP	1G33-H0190	VARIABLE SPRING	VT-3	NS	672-101
F1.SP	1G33-H0204	VARIABLE SPRING	VT-3	NS	671-105

ITEM NO.	MARK NO.	COMPONENT DESCRIPTION	EXAM METHOD	PERIOD SCHED.	ISI ISO SS-305-
		EXAMINATION CATEGORY: F-A			
F1.G	1G33-H0205	RIGID GUIDE	VT-3	NS	671-106
F1.SP	1G33-H0206	VARIABLE SPRING	VT-3	3	671-107
F1.ST	1G33-H0210	RIGID STRUT	VT-3	NS	671-102
F1.ST	1G33-H0211	RIGID STRUT	VT-3	3	671-102
F2.SN	1G33-H0215	MECHANICAL SNUBBER	VT-3	2	672-102
F2.SN	1G33-H0216	MECHANICAL SNUBBER	VT-3	NS	672-102
F2.SN	1G33-H0217	MECHANICAL SNUBBER	VT-3	NS	672-102
F2.SN	1G33-H0218	MECHANICAL SNUBBER	VT-3	NS	672-102
F2.SN	1G33-H0219	MECHANICAL SNUBBER	VT-3	NS	672-101
F2.SN	1G33-H0220	MECHANICAL SNUBBER	VT-3	NS	672-101
F2.SN	1G33-H0221	MECHANICAL SNUBBER	VT-3	NS	672-101
F2.SN	1G33-H0222	MECHANICAL SNUBBER	VT-3	NS	672-101
F2.SN	1G33-H0223	MECHANICAL SNUBBER	VT-3	NS	672-101
F2.SN	1G33-H0224	MECHANICAL SNUBBER (TANDEM)	VT-3	1	672-101
F1.50	1G33-H0238	RIGID STRUT (AUGMENTED HEPIBER)	VT-3	1	671-104
F2.SN	1G33-H0239	MECHANICAL SNUBBER	VT-3	NS	672-101
F2.SN	1G33-H0240	MECHANICAL SNUBBER	VT-3	NS	672-101
F1.50	1G33-H0269	MECHANICAL SNUBBER (AUGMENTED HEPIBER)	VT-3	2	672-103
F1.50	1G33-H0271	RIGID STRUT (AUGMENTED HEPIBER)	VT-3	2	672-103
F2.SP	1G33-H0273	VARIABLE SPRING (WA < .75")	VT-3	NS	672-102
F1.G	1G33-H1007	RIGID GUIDE	VT-3	NS	671-107
F1.G	1G33-H1008	RIGID GUIDE	VT-3	NS	671-105
F1.E	1G33-P131-SP1	RIGID GUIDE (INSIDE PENETRATION GUARD PIPE)	VT-3	NS	671-104
F1.E	1G33-P131-SP2	RIGID GUIDE (INSIDE PENETRATION GUARD PIPE)	VT-3	NS	671-104
F2.E	1G33-P132-SP1	RIGID GUIDE (INSIDE PENETRATION GUARD PIPE)	VT-3	NS	672-102
F1.A	1G33-P131-SP	ANCHOR (WA)	VT-3	NS	671-104
F2.A	1G33-P132-SP	ANCHOR (WA)	VT-3	NS	672-102
F2.STm	1G40-H0008	RIGID STRUT (TANDEM)	VT-3	3	246-103
F2.ST	1G40-H0024	RIGID STRUT	VT-3	NS	246-101
F2.STm	1G40-H0025	RIGID STRUT (TANDEM)	VT-3	NS	246-102
F2.STm	1G40-H0026	RIGID STRUT (TANDEM)	VT-3	NS	705-103
F2.ST	1G40-H0027	RIGID STRUT	VT-3	NS	246-101
F2.STm	1G40-H0028	RIGID STRUT (TANDEM)	VT-3	NS	641-106
F1.40	1G41-A002A-SP	ANCHOR, SURGE TANK (WA)	VT-3	1	655-118
F1.40	1G41-A002B-SP	ANCHOR, SURGE TANK (WA)	VT-3	NS	655-119
F1.40	1G41-B001A-SP	ANCHOR, HEAT EXCHANGER (WA)	VT-3	3	654-108
F1.40	1G41-B001B-SP	ANCHOR, HEAT EXCHANGER (WA)	VT-3	NS	654-108
F3.ST	1G41-H0001	RIGID STRUT	VT-3	NS	655-116
F3.STm	1G41-H0002	RIGID STRUT	VT-3	NS	655-116
F3.ST	1G41-H0003	RIGID STRUT	VT-3	NS	655-117

ITEM NO.	MARK NO.	COMPONENT DESCRIPTION	EXAM METHOD	PERIOD SCHED.	ISI ISO SS-305-
		EXAMINATION CATEGORY: F-A			
F3.ST	1G41-H0004	RIGID STRUT	VT-3	NS	655-117
F3.R	1G41-H0005	RIGID ROD	VT-3	3	655-117
F3.ST	1G41-H0006	RIGID STRUT	VT-3	NS	655-117
F3.ST	1G41-H0007	RIGID STRUT	VT-3	NS	655-117
F3.ST	1G41-H0008	RIGID STRUT	VT-3	NS	655-117
F3.R	1G41-H0011	RIGID ROD	VT-3	1	655-117
F3.SN	1G41-H0012	MECHANICAL SNUBBER (TANDEM)	VT-3	NS	655-117
F3.G	1G41-H0013	RIGID GUIDE	VT-3	NS	655-117
F3.R	1G41-H0015	RIGID ROD	VT-3	NS	655-117
F3.Gs	1G41-H0016	RIGID GUIDE	VT-3	NS	655-117
F3.R	1G41-H0017	RIGID ROD	VT-3	NS	655-117
F3.Gs	1G41-H0018	RIGID GUIDE	VT-3	NS	655-117
F3.R	1G41-H0019	RIGID ROD	VT-3	NS	655-117
F3.Gs	1G41-H0020	RIGID GUIDE	VT-3	NS	655-117
F3.R	1G41-H0021	RIGID ROD	VT-3	NS	655-117
F3.Gs	1G41-H0022	RIGID GUIDE	VT-3	NS	655-117
F3.R	1G41-H0023	RIGID ROD	VT-3	NS	655-117
F3.Gs	1G41-H0024	RIGID GUIDE	VT-3	NS	655-117
F3.SN	1G41-H0025	MECHANICAL SNUBBER	VT-3	NS	655-117
F3.ST	1G41-H0026	RIGID STRUT (WA)	VT-3	NS	655-117
F3.ST	1G41-H0027	RIGID STRUT	VT-3	NS	655-117
F3.G	1G41-H0030	RIGID GUIDE	VT-3	NS	655-110
F3.G	1G41-H0031	RIGID GUIDE	VT-3	NS	655-110
F3.SP	1G41-H0032	VARIABLE SPRING	VT-3	NS	655-110
F3.G	1G41-H0033	RIGID GUIDE	VT-3	3	655-110
F3.G	1G41-H0034	RIGID GUIDE	VT-3	NS	655-110
F3.G	1G41-H0035	RIGID GUIDE	VT-3	NS	655-110
F3.ST	1G41-H0036	RIGID STRUT	VT-3	NS	655-110
F3.SN	1G41-H0037	MECHANICAL SNUBBER (TANDEM)	VT-3	NS	655-110
F3.SP	1G41-H0038	VARIABLE SPRING (WA)	VT-3	NS	655-110
F3.ST	1G41-H0039	RIGID STRUT	VT-3	NS	655-110
F3.ST	1G41-H0040	RIGID STRUT	VT-3	NS	655-110
F3.ST	1G41-H0041	RIGID STRUT (WA) (TANDEM)	VT-3	NS	655-110
F3.ST	1G41-H0042	RIGID STRUT	VT-3	NS	655-110
F3.ST	1G41-H0043	RIGID STRUT	VT-3	1	655-110
F3.ST	1G41-H0044	RIGID STRUT	VT-3	NS	655-110
F3.ST	1G41-H0045	RIGID STRUT (WA)	VT-3	NS	655-110
F3.STm	1G41-H0047	RIGID STRUT	VT-3	NS	651-103
F3.SN	1G41-H0048	MECHANICAL SNUBBER	VT-3	NS	651-103
F3.ST	1G41-H0049	RIGID STRUT	VT-3	NS	651-103

ITEM NO.	MARK NO.	COMPONENT DESCRIPTION	EXAM METHOD	PERIOD SCHED.	ISI ISO SS-305-
		EXAMINATION CATEGORY: F-A			
F2.SN	1G41-H0050	MECHANICAL SNUBBER	VT-3	NS	655-107
F3.SN	1G41-H0051	MECHANICAL SNUBBER	VT-3	NS	655-107
F3.ST	1G41-H0052	RIGID STRUT	VT-3	NS	655-107
F3.G	1G41-H0053	RIGID GUIDE	VT-3	NS	655-107
F3.G	1G41-H0054	RIGID GUIDE (WA)	VT-3	NS	655-107
F3.SP	1G41-H0055	VARIABLE SPRING	VT-3	NS	655-107
F3.STm	1G41-H0056	RIGID STRUT	VT-3	NS	655-107
F3.SP	1G41-H0057	VARIABLE SPRING	VT-3	NS	655-107
F3.G	1G41-H0058	RIGID GUIDE	VT-3	NS	655-107
F3.SN	1G41-H0059	MECHANICAL SNUBBER	VT-3	NS	655-107
F3.R	1G41-H0060	RIGID SUPPORT	VT-3	2	654-104
F3.R	1G41-H0061	RIGID SUPPORT	VT-3	NS	654-104
F3.ST	1G41-H0062	RIGID STRUT	VT-3	NS	654-104
F3.ST	1G41-H0063	RIGID STRUT	VT-3	NS	654-104
F3.R	1G41-H0064	RIGID SUPPORT	VT-3	NS	654-104
F3.SP	1G41-H0065	VARIABLE SPRING	VT-3	NS	654-104
F3.ST	1G41-H0066	RIGID STRUT	VT-3	NS	654-104
F3.SN	1G41-H0068	MECHANICAL SNUBBER	VT-3	NS	654-101
F3.G	1G41-H0069	RIGID GUIDE	VT-3	NS	654-101
F3.SN	1G41-H0070	MECHANICAL SNUBBER (WA)	VT-3	NS	654-101
F3.G	1G41-H0071	RIGID GUIDE	VT-3	NS	654-101
F3.SP	1G41-H0072	VARIABLE SPRING (TANDEM)	VT-3	NS	654-101
F3.ST	1G41-H0073	RIGID STRUT	VT-3	NS	654-101
F3.SP	1G41-H0074	VARIABLE SPRING	VT-3	NS	654-101
F3.G	1G41-H0075	RIGID GUIDE	VT-3	NS	654-101
F3.ST	1G41-H0076	RIGID STRUT	VT-3	2	654-101
F3.STm	1G41-H0090	RIGID STRUT	VT-3	NS	655-109
F3.STm	1G41-H0091	RIGID STRUT	VT-3	NS	655-109
F3.STm	1G41-H0094	RIGID STRUT	VT-3	NS	655-109
F3.STm	1G41-H0095	RIGID STRUT	VT-3	NS	655-109
F3.STm	1G41-H0096	RIGID STRUT	VT-3	NS	655-109
F3.STm	1G41-H0097	RIGID STRUT	VT-3	NS	655-109
F3.STm	1G41-H0098	RIGID STRUT	VT-3	NS	655-109
F3.STm	1G41-H0099	RIGID STRUT	VT-3	NS	655-109
F3.STm	1G41-H0100	RIGID STRUT	VT-3	NS	655-109
F3.STm	1G41-H0101	RIGID STRUT	VT-3	NS	655-109
F3.STm	1G41-H0102	RIGID STRUT	VT-3	NS	655-109
F3.STm	1G41-H0103	RIGID STRUT	VT-3	NS	655-109
F3.STm	1G41-H0104	RIGID STRUT	VT-3	NS	655-109

ITEM NO.	MARK NO.	COMPONENT DESCRIPTION	EXAM METHOD	PERIOD SCHED.	ISI ISO SS-305-
		EXAMINATION CATEGORY: F-A			
F3.STm	1G41-H0105	RIGID STRUT	VT-3	1	655-109
F3.STm	1G41-H0106	RIGID STRUT	VT-3	NS	655-109
F3.STm	1G41-H0107	RIGID STRUT	VT-3	NS	655-109
F3.STm	1G41-H0108	RIGID STRUT	VT-3	NS	655-109
F3.STm	1G41-H0109	RIGID STRUT	VT-3	NS	655-109
F3.STm	1G41-H0110	RIGID STRUT	VT-3	NS	655-109
F3.STm	1G41-H0111	RIGID STRUT	VT-3	NS	655-109
F3.STm	1G41-H0112	RIGID STRUT	VT-3	NS	655-109
F3.STm	1G41-H0113	RIGID STRUT	VT-3	3	655-109
F3.STm	1G41-H0114	RIGID STRUT	VT-3	NS	655-109
F3.STm	1G41-H0115	RIGID STRUT	VT-3	NS	655-109
F3.ST	1G41-H0117	RIGID STRUT	VT-3	NS	655-112
F3.ST	1G41-H0118	RIGID STRUT	VT-3	NS	655-108
F3.SN	1G41-H0119	MECHANICAL SNUBBER	VT-3	NS	655-108
F3.ST	1G41-H0120	RIGID STRUT	VT-3	NS	655-108
F3.SN	1G41-H0121	MECHANICAL SNUBBER	VT-3	NS	655-108
F3.ST	1G41-H0122	RIGID STRUT	VT-3	NS	655-108
F3.ST	1G41-H0123	RIGID STRUT	VT-3	NS	655-108
F3.STm	1G41-H0124	RIGID STRUT	VT-3	NS	655-108
F3.STm	1G41-H0125	RIGID STRUT	VT-3	NS	655-108
F3.ST	1G41-H0126	RIGID STRUT	VT-3	NS	655-108
F3.ST	1G41-H0127	RIGID STRUT	VT-3	2	655-108
F3.Gs	1G41-H0128	RIGID GUIDE	VT-3	NS	655-108
F3.ST	1G41-H0129	RIGID STRUT (WA)	VT-3	NS	655-108
F3.Gs	1G41-H0130	RIGID GUIDE	VT-3	NS	655-108
F3.G	1G41-H0131	RIGID GUIDE	VT-3	NS	655-108
F3.G	1G41-H0133	RIGID GUIDE	VT-3	1	655-108
F3.G	1G41-H0135	RIGID GUIDE	VT-3	NS	655-108
F3.ST	1G41-H0137	RIGID STRUT	VT-3	NS	655-108
F3.ST	1G41-H0139	RIGID STRUT (WA)	VT-3	NS	655-108
F3.G	1G41-H0140	RIGID GUIDE	VT-3	NS	655-108
F3.G	1G41-H0141	RIGID GUIDE	VT-3	NS	655-108
F3.STm	1G41-H0158	RIGID STRUT	VT-3	NS	655-109
F3.STm	1G41-H0159	RIGID STRUT	VT-3	NS	655-109
F3.STm	1G41-H0160	RIGID STRUT	VT-3	NS	655-109
F3.STm	1G41-H0161	RIGID STRUT	VT-3	NS	655-109
F3.STm	1G41-H0162	RIGID STRUT	VT-3	NS	655-111
F3.STm	1G41-H0163	RIGID STRUT	VT-3	3	655-111
F3.STm	1G41-H0164	RIGID STRUT	VT-3	NS	655-111
F3.STm	1G41-H0165	RIGID STRUT	VT-3	NS	655-111

ITEM NO.	MARK NO.	COMPONENT DESCRIPTION	EXAM METHOD	PERIOD SCHED.	ISI ISO SS-305-
		EXAMINATION CATEGORY: F-A			
F3.STm	1G41-H0166	RIGID STRUT	VT-3	NS	655-111
F3.STm	1G41-H0167	RIGID STRUT	VT-3	NS	655-111
F3.STm	1G41-H0168	RIGID STRUT	VT-3	NS	655-111
F3.STm	1G41-H0169	RIGID STRUT	VT-3	NS	655-111
F3.SN	1G41-H0170	MECHANICAL SNUBBER	VT-3	NS	655-111
F3.SN	1G41-H0171	MECHANICAL SNUBBER	VT-3	NS	655-111
F3.G	1G41-H0172	RIGID GUIDE	VT-3	NS	655-112
F3.G	1G41-H0173	RIGID GUIDE	VT-3	NS	655-112
F3.G	1G41-H0174	RIGID GUIDE	VT-3	NS	655-112
F3.ST	1G41-H0175	RIGID STRUT	VT-3	NS	655-112
F3.ST	1G41-H0176	RIGID STRUT	VT-3	NS	655-112
F3.ST	1G41-H0177	RIGID STRUT	VT-3	NS	655-112
F3.SP	1G41-H0178	VARIABLE SPRING	VT-3	NS	654-103
F3.SN	1G41-H0179	MECHANICAL SNUBBER & RIGID STRUT	VT-3	NS	655-108
F3.ST	1G41-H0184	RIGID STRUT (WA)	VT-3	NS	655-108
F3.R	1G41-H0189	RIGID SUPPORT	VT-3	NS	655-112
F3.ST	1G41-H0190	RIGID STRUT	VT-3	NS	655-112
F3.SN	1G41-H0191	MECHANICAL SNUBBER	VT-3	1	655-112
F3.G	1G41-H0192	RIGID GUIDE	VT-3	NS	655-112
F3.G	1G41-H0193	RIGID GUIDE	VT-3	NS	655-112
F3.G	1G41-H0194	RIGID GUIDE	VT-3	NS	655-112
F3.STm	1G41-H0195	RIGID STRUT	VT-3	NS	655-112
F3.STm	1G41-H0196	RIGID STRUT	VT-3	NS	655-112
F3.STm	1G41-H0197	RIGID STRUT	VT-3	1	655-112
F3.STm	1G41-H0198	RIGID STRUT	VT-3	NS	655-112
F3.STm	1G41-H0199	RIGID STRUT	VT-3	NS	655-112
F3.STm	1G41-H0200	RIGID STRUT	VT-3	NS	655-112
F3.G	1G41-H0205	RIGID GUIDE	VT-3	NS	654-107
F3.ST	1G41-H0206	RIGID STRUT	VT-3	NS	654-107
F3.ST	1G41-H0207	RIGID STRUT	VT-3	NS	654-107
F3.ST	1G41-H0208	RIGID STRUT	VT-3	NS	654-107
F3.G	1G41-H0209	RIGID GUIDE	VT-3	NS	654-107
F3.R	1G41-H0210	RIGID SUPPORT	VT-3	NS	654-107
F3.ST	1G41-H0211	RIGID STRUT	VT-3	NS	654-107
F3.ST	1G41-H0212	RIGID STRUT	VT-3	NS	654-107
F3.ST	1G41-H0213	RIGID STRUT	VT-3	NS	654-107
F3.G	1G41-H0214	RIGID GUIDE	VT-3	NS	654-107
F3.ST	1G41-H0215	RIGID STRUT	VT-3	NS	654-106
F3.ST	1G41-H0216	RIGID STRUT	VT-3	NS	654-107

ITEM NO.	MARK NO.	COMPONENT DESCRIPTION	EXAM METHOD	PERIOD SCHED.	ISI ISO SS-305-
		EXAMINATION CATEGORY: F-A			
F3.ST	1G41-H0217	RIGID STRUT	VT-3	NS	654-107
F3.ST	1G41-H0218	RIGID STRUT	VT-3	NS	654-107
F3.ST	1G41-H0219	RIGID STRUT	VT-3	NS	654-107
F3.ST	1G41-H0220	RIGID STRUT	VT-3	NS	654-106
F3.G	1G41-H0221	RIGID GUIDE (WA)	VT-3	NS	651-101
F3.ST	1G41-H0222	RIGID STRUT	VT-3	NS	651-101
F3.G	1G41-H0223	RIGID GUIDE	VT-3	3	651-101
F3.G	1G41-H0224	RIGID GUIDE	VT-3	NS	651-101
F3.ST	1G41-H0225	RIGID STRUT	VT-3	2	651-101
F3.ST	1G41-H0226	RIGID STRUT	VT-3	NS	655-111
F3.SN	1G41-H0227	MECHANICAL SNUBBER	VT-3	NS	655-111
F3.SN	1G41-H0228	MECHANICAL SNUBBER (TANDEM) (WA)	VT-3	NS	655-111
F3.ST	1G41-H0229	RIGID STRUT	VT-3	NS	655-111
F3.SN	1G41-H0230	MECHANICAL SNUBBER	VT-3	NS	655-111
F3.ST	1G41-H0231	RIGID STRUT	VT-3	NS	655-111
F3.SN	1G41-H0232	MECHANICAL SNUBBER	VT-3	1	655-111
F3.SN	1G41-H0233	MECHANICAL SNUBBER	VT-3	NS	655-111
F3.ST	1G41-H0234	RIGID STRUT	VT-3	NS	655-111
F3.ST	1G41-H0235	RIGID STRUT	VT-3	NS	655-111
F3.SN	1G41-H0236	MECHANICAL SNUBBER (WA) (TANDEM)	VT-3	NS	655-111
F3.SN	1G41-H0238	MECHANICAL SNUBBER (WA)	VT-3	NS	655-112
F3.ST	1G41-H0239	RIGID STRUT	VT-3	1	655-111
F3.SN	1G41-H0241	MECHANICAL SNUBBER	VT-3	NS	655-112
F3.SN	1G41-H0242	MECHANICAL SNUBBER (WA) (TANDEM)	VT-3	NS	655-109
F3.SN	1G41-H0243	MECHANICAL SNUBBER	VT-3	NS	655-111
F3.ST	1G41-H0244	RIGID STRUT (WA)	VT-3	NS	655-112
F3.ST	1G41-H0246	RIGID STRUT	VT-3	NS	654-106
F3.G	1G41-H0247	RIGID GUIDE	VT-3	NS	654-106
F3.G	1G41-H0248	RIGID GUIDE	VT-3	2	654-106
F3.ST	1G41-H0250	RIGID STRUT	VT-3	NS	654-102
F3.ST	1G41-H0251	RIGID STRUT	VT-3	NS	651-101
F3.ST	1G41-H0252	RIGID STRUT	VT-3	NS	651-101
F3.ST	1G41-H0253	RIGID STRUT	VT-3	NS	654-106
F3.Gs	1G41-H0256	RIGID GUIDE	VT-3	NS	654-107
F3.G	1G41-H0257	RIGID GUIDE	VT-3	NS	654-106
F3.ST	1G41-H0260	RIGID STRUT	VT-3	NS	654-102
F3.ST	1G41-H0261	RIGID STRUT	VT-3	NS	654-102
F3.ST	1G41-H0262	RIGID STRUT	VT-3	NS	654-106
F3.ST	1G41-H0263	RIGID STRUT	VT-3	NS	655-113

ITEM NO.	MARK NO.	COMPONENT DESCRIPTION	EXAM METHOD	PERIOD SCHED.	ISI ISO SS-305-
		EXAMINATION CATEGORY: F-A			
F3.ST	1G41-H0266	RIGID STRUT	VT-3	3	655-113
F3.ST	1G41-H0267	RIGID STRUT	VT-3	NS	655-113
F3.Gs	1G41-H0268	RIGID GUIDE	VT-3	NS	655-113
F3.ST	1G41-H0269	RIGID STRUT	VT-3	NS	651-101
F3.ST	1G41-H0273	RIGID STRUT (WA)	VT-3	NS	654-107
F3.ST	1G41-H0275	RIGID STRUT (WA)	VT-3	2	654-107
F3.ST	1G41-H0276	RIGID STRUT	VT-3	NS	651-101
F3.ST	1G41-H0277	RIGID STRUT	VT-3	NS	654-104
F3.ST	1G41-H0278	RIGID STRUT	VT-3	NS	651-103
F3.ST	1G41-H0279	RIGID STRUT	VT-3	NS	651-103
F3.ST	1G41-H0280	RIGID STRUT	VT-3	NS	651-103
F3.G	1G41-H0281	RIGID GUIDE (WA)	VT-3	NS	651-103
F3.ST	1G41-H0282	RIGID STRUT	VT-3	3	651-103
F3.STm	1G41-H0283	RIGID STRUT	VT-3	NS	651-103
F3.STm	1G41-H0284	RIGID STRUT	VT-3	NS	651-103
F3.G	1G41-H0287	RIGID GUIDE	VT-3	NS	654-105
F3.G	1G41-H0288	RIGID GUIDE	VT-3	NS	654-105
F3.G	1G41-H0290	RIGID GUIDE	VT-3	NS	654-105
F3.G	1G41-H0291	RIGID GUIDE	VT-3	3	654-105
F3.G	1G41-H0292	RIGID GUIDE	VT-3	NS	654-105
F3.G	1G41-H0293	RIGID GUIDE	VT-3	NS	654-105
F3.ST	1G41-H0294	RIGID STRUT	VT-3	NS	654-105
F3.ST	1G41-H0295	RIGID STRUT	VT-3	NS	654-105
F3.ST	1G41-H0296	RIGID STRUT	VT-3	NS	654-105
F3.STm	1G41-H0297	RIGID STRUT	VT-3	NS	654-105
F3.STm	1G41-H0298	RIGID STRUT	VT-3	NS	654-105
F3.ST	1G41-H0299	RIGID STRUT	VT-3	NS	654-105
F3.G	1G41-H0300	RIGID GUIDE	VT-3	NS	654-105
F3.SN	1G41-H0301	MECHANICAL SNUBBER	VT-3	NS	654-105
F3.ST	1G41-H0302	RIGID STRUT (TANDEM)	VT-3	NS	654-105
F3.STm	1G41-H0303	RIGID STRUT	VT-3	NS	654-105
F3.ST	1G41-H0304	RIGID STRUT	VT-3	NS	654-105
F3.ST	1G41-H0305	RIGID STRUT	VT-3	NS	654-105
F3.ST	1G41-H0306	RIGID STRUT	VT-3	NS	654-105
F3.STm	1G41-H0307	RIGID STRUT	VT-3	NS	654-105
F3.Gs	1G41-H0308	RIGID GUIDE	VT-3	NS	654-103
F3.G	1G41-H0309	RIGID GUIDE (WA)	VT-3	NS	654-103
F3.Gs	1G41-H0310	RIGID GUIDE	VT-3	NS	654-103
F3.SP	1G41-H0311	VARIABLE SPRING	VT-3	2	654-102

ITEM NO.	MARK NO.	COMPONENT DESCRIPTION	EXAM METHOD	PERIOD SCHED.	ISI ISO SS-305-
		EXAMINATION CATEGORY: F-A			
F3.ST	1G41-H0312	RIGID STRUT	VT-3	NS	654-102
F3.ST	1G41-H0313	RIGID STRUT	VT-3	1	654-102
F3.ST	1G41-H0314	RIGID STRUT	VT-3	NS	654-102
F3.ST	1G41-H0315	RIGID STRUT	VT-3	NS	654-102
F3.G	1G41-H0316	RIGID GUIDE (WA)	VT-3	NS	654-102
F3.G	1G41-H0318	RIGID GUIDE	VT-3	NS	655-104
F3.G	1G41-H0362	RIGID GUIDE	VT-3	NS	655-115
F3.SN	1G41-H0363	MECHANICAL SNUBBER	VT-3	NS	655-115
F3.ST	1G41-H0364	RIGID STRUT	VT-3	NS	655-115
F3.ST	1G41-H0365	RIGID STRUT	VT-3	NS	655-115
F3.ST	1G41-H0366	RIGID STRUT	VT-3	NS	655-115
F3.G	1G41-H0367	RIGID GUIDE	VT-3	NS	655-115
F3.SN	1G41-H0368	MECHANICAL SNUBBER	VT-3	NS	655-115
F3.SN	1G41-H0369	MECHANICAL SNUBBER	VT-3	NS	655-116
F3.STm	1G41-H0370	RIGID STRUT	VT-3	NS	655-115
F3.ST	1G41-H0371	RIGID STRUT	VT-3	NS	655-115
F3.ST	1G41-H0372	RIGID STRUT	VT-3	NS	655-115
F3.STm	1G41-H0373	RIGID STRUT	VT-3	3	655-115
F3.STm	1G41-H0374	RIGID STRUT	VT-3	NS	655-115
F3.ST	1G41-H0375	RIGID STRUT	VT-3	NS	655-115
F3.STm	1G41-H0376	RIGID STRUT	VT-3	NS	655-115
F3.ST	1G41-H0377	RIGID STRUT	VT-3	NS	655-115
F3.ST	1G41-H0378	RIGID STRUT	VT-3	NS	655-115
F3.STm	1G41-H0379	RIGID STRUT	VT-3	NS	655-115
F3.ST	1G41-H0380	RIGID STRUT	VT-3	NS	655-115
F3.ST	1G41-H0381	RIGID STRUT	VT-3	NS	655-115
F3.R	1G41-H0382	RIGID SUPPORT	VT-3	NS	655-115
F3.ST	1G41-H0383	RIGID STRUT	VT-3	NS	655-116
F3.ST	1G41-H0384	RIGID STRUT	VT-3	NS	655-116
F3.STm	1G41-H0385	RIGID STRUT	VT-3	NS	655-116
F3.ST	1G41-H0386	RIGID STRUT	VT-3	NS	655-116
F3.ST	1G41-H0387	RIGID STRUT	VT-3	2	655-116
F3.SN	1G41-H0388	MECHANICAL SNUBBER	VT-3	NS	655-116
F3.SN	1G41-H0389	MECHANICAL SNUBBER	VT-3	NS	655-116
F3.ST	1G41-H0390	RIGID STRUT	VT-3	NS	655-116
F3.ST	1G41-H0391	RIGID STRUT	VT-3	NS	655-116
F3.ST	1G41-H0392	RIGID STRUT	VT-3	NS	655-116
F3.ST	1G41-H0393	RIGID STRUT	VT-3	NS	655-116
F3.ST	1G41-H0394	RIGID STRUT	VT-3	NS	655-114
F3.ST	1G41-H0395	RIGID STRUT	VT-3	NS	655-114

ITEM NO.	MARK NO.	COMPONENT DESCRIPTION	EXAM METHOD	PERIOD SCHED.	ISI ISO SS-305-
		EXAMINATION CATEGORY: F-A			
F3.G	1G41-H0396	RIGID GUIDE (WA)	VT-3	NS**	655-114
F3.G	1G41-H0400	RIGID GUIDE	VT-3	NS	655-105
F3.G	1G41-H0401	RIGID GUIDE	VT-3	NS	655-105
F3.A	1G41-H0404	ANCHOR (WA)	VT-3	NS	655-105
F3.STm	1G41-H0407	RIGID STRUT	VT-3	NS	655-104
F3.STm	1G41-H0408	RIGID STRUT	VT-3	NS	655-104
F3.STm	1G41-H0409	RIGID STRUT	VT-3	1	655-106
F3.STm	1G41-H0410	RIGID STRUT	VT-3	NS	655-106
F3.A	1G41-H0415	ANCHOR (WA)	VT-3	NS	654-103
F3.G	1G41-H0416	RIGID GUIDE	VT-3	NS	651-102
F3.G	1G41-H0418	RIGID GUIDE	VT-3	NS	651-102
F3.A	1G41-H0425	ANCHOR (WA)	VT-3	3	654-102
F3.A	1G41-H0427	ANCHOR (WA)	VT-3	NS	655-116
F3.ST	1G41-H0429	RIGID STRUT (WA)	VT-3	NS	651-102
F3.ST	1G41-H0430	RIGID STRUT	VT-3	NS	655-112
F3.SP	1G41-H0449	VARIABLE SPRING (TANDEM)	VT-3	NS	654-101
F3.SN	1G41-H0450	MECHANICAL SNUBBER (TANDEM)	VT-3	3	654-101
F3.ST	1G41-H0453	RIGID STRUT	VT-3	NS	655-105
F3.G	1G41-H0460	RIGID GUIDE	VT-3	NS	655-105
F3.ST	1G41-H0471	RIGID STRUT	VT-3	NS	655-115
F3.SN	1G41-H0472	MECHANICAL SNUBBER	VT-3	NS	655-115
F3.SN	1G41-H0478	MECHANICAL SNUBBER	VT-3	NS	655-114
F3.ST	1G41-H0481	RIGID STRUT (WA)	VT-3	NS	654-105
F3.ST	1G41-H0484	RIGID STRUT	VT-3	NS	655-108
F3.STm	1G41-H0485	RIGID STRUT	VT-3	NS	655-106
F3.STm	1G41-H0486	RIGID STRUT	VT-3	NS	655-108
F3.ST	1G41-H0487	RIGID STRUT	VT-3	NS	655-112
F3.STm	1G41-H0488	RIGID STRUT	VT-3	NS	655-112
F3.STm	1G41-H0489	RIGID STRUT	VT-3	NS	655-108
F3.ST	1G41-H0492	RIGID STRUT	VT-3	NS	655-106
F3.SN	1G41-H0493	MECHANICAL SNUBBER	VT-3	NS	651-101
F3.SN	1G41-H0494	MECHANICAL SNUBBER	VT-3	NS	655-108
F3.STm	1G41-H0498	RIGID STRUT	VT-3	NS	651-103
F3.STm	1G41-H0499	RIGID STRUT	VT-3	NS	651-103
F3.R	1G41-H0500	RIGID SUPPORT	VT-3	NS	654-104
F3.ST	1G41-H0501	RIGID STRUT	VT-3	2	654-104
F3.ST	1G41-H0502	RIGID STRUT	VT-3	NS	651-101
F3.SP	1G41-H0503	VARIABLE SPRING	VT-3	NS	654-101
F3.Gs	1G41-H5000	RIGID GUIDE	VT-3	NS	654-106
F3.SN	1G41-H5001	MECHANICAL SNUBBER (WA) (TANDEM)	VT-3	NS	655-108

ITEM NO.	MARK NO.	COMPONENT DESCRIPTION	EXAM METHOD	PERIOD SCHED.	ISI ISO SS-305-
		EXAMINATION CATEGORY: F-A			
F3.SN	1G42-H0004	MECHANICAL SNUBBER	VT-3	2	655-101
F3.G	1G42-H0005	RIGID GUIDE (WA)	VT-3	NS	655-101
F3.Gs	1G42-H0006	RIGID GUIDE	VT-3	NS	655-101
F3.Gs	1G42-H0007	RIGID GUIDE	VT-3	NS	655-101
F3.ST	1G42-H0008	RIGID STRUT	VT-3	NS	655-101
F3.STm	1G42-H0009	RIGID STRUT	VT-3	NS	655-101
F3.SN	1G42-H0010	MECHANICAL SNUBBER (WA)	VT-3	NS	655-101
F3.ST	1G42-H0012	RIGID STRUT	VT-3	NS	655-101
F3.SN	1G42-H0013	MECHANICAL SNUBBER (WA)	VT-3	NS	655-101
F3.STm	1G42-H0014	RIGID STRUT	VT-3	1	655-101
F3.STm	1G42-H0015	RIGID STRUT	VT-3	NS	655-101
F3.ST	1G42-H0016	RIGID STRUT	VT-3	3	655-101
F3.G	1G42-H0017	RIGID GUIDE	VT-3	1	655-101
F2.G	1N11-H0221	RIGID GUIDE (WA)	VT-3	NS	605-108
F2.G	1N11-H0222	RIGID GUIDE (WA)	VT-3	NS	605-110
F2.G	1N11-H0223	RIGID GUIDE (WA)	VT-3	NS	605-107
F2.G	1N11-H0224	RIGID GUIDE (WA)	VT-3	NS	605-109
F2.SP	1N11-H0229	VARIABLE SPRING	VT-3	1	605-108
F2.SP	1N11-H0230	VARIABLE SPRING	VT-3	NS	605-110
F2.SP	1N11-H0231	VARIABLE SPRING	VT-3	NS	605-107
F2.SP	1N11-H0232	VARIABLE SPRING	VT-3	NS	605-109
F1.ST	1N22-H0003	RIGID STRUT	VT-3	1	121-101
F1.SN	1N22-H0004	MECHANICAL SNUBBER	VT-3	NS	121-102
F1.SP	1N22-H0005	VARIABLE SPRING	VT-3	NS	121-102
F1.SN	1N22-H0006	MECHANICAL SNUBBER	VT-3	NS	121-102
F1.ST	1N22-H0007	RIGID STRUT	VT-3	NS	121-102
F1.SN	1N22-H0008	MECHANICAL SNUBBER	VT-3	NS	121-102
F1.SP	1N22-H0010	VARIABLE SPRING	VT-3	NS	121-102
F1.SN	1N22-H0011	MECHANICAL SNUBBER	VT-3	NS	121-102
F1.ST	1N22-H0012	RIGID STRUT	VT-3	2	121-102
F1.SN	1N22-H0013	MECHANICAL SNUBBER	VT-3	2	121-102
F1.ST	1N22-H0014	RIGID STRUT	VT-3	NS	121-101
F1.SN	1N22-H0015	MECHANICAL SNUBBER	VT-3	NS	121-101
F1.ST	1N22-H0016	RIGID STRUT	VT-3	NS	121-101
F1.SN	1N22-H0017	MECHANICAL SNUBBER	VT-3	1	121-101
F1.ST	1N22-H0018	RIGID STRUT	VT-3	NS	121-101
F1.SP	1N22-H0019	VARIABLE SPRING	VT-3	2	121-101

ITEM NO.	MARK NO.	COMPONENT DESCRIPTION	EXAM METHOD	PERIOD SCHED.	ISI ISO SS-305-
		EXAMINATION CATEGORY: F-A			
F1.SN	1N22-H0126	MECHANICAL SNUBBER	VT-3	NS	121-102
F1.SN	1N22-H0127	MECHANICAL SNUBBER	VT-3	NS	121-102
F1.SN	1N22-H0128	MECHANICAL SNUBBER	VT-3	NS	121-102
F1.SN	1N22-H0129	MECHANICAL SNUBBER	VT-3	3	121-102
F1.SN	1N22-H0130	MECHANICAL SNUBBER	VT-3	1	121-103
F1.SN	1N22-H0131	MECHANICAL SNUBBER	VT-3	NS	121-101
F1.ST	1N22-H0132	RIGID STRUT	VT-3	NS	121-103
F1.SN	1N22-H0148	MECHANICAL SNUBBER	VT-3	NS	121-101
F1.E	1N22-P423-SP1	RIGID GUIDE (INSIDE PENETRATION GUARD PIPE)	VT-3	NS	121-103
F1.E	1N22-P423-SP2	RIGID GUIDE (INSIDE PENETRATION GUARD PIPE)	VT-3	NS	121-103
F1.E	1N22-P423-SP3	RIGID GUIDE (INSIDE PENETRATION GUARD PIPE)	VT-3	NS	121-103
F1.A	1N22-P423-SP	ANCHOR (WA)	VT-3	NS	121-103
F1.SN	1N27-H0001	HYDRAULIC SNUBBER	VT-3	1	082-103
F1.SN	1N27-H0004	HYDRAULIC SNUBBER	VT-3	NS	082-102
F1.SN	1N27-H0005	HYDRAULIC SNUBBER	VT-3	NS	082-102
F1.SN	1N27-H0006	HYDRAULIC SNUBBER	VT-3	NS	082-102
F1.SN	1N27-H0007	HYDRAULIC SNUBBER	VT-3	NS	082-102
F1.SP	1N27-H0010	VARIABLE SPRING (WA)	VT-3	NS	082-103
F1.SP	1N27-H0011	VARIABLE SPRING	VT-3	1	082-102
F1.SP	1N27-H0012	VARIABLE SPRING (TANDEM)	VT-3	NS	082-102
F1.SN	1N27-H0013	HYDRAULIC SNUBBER	VT-3	NS	082-106
F1.SN	1N27-H0016	HYDRAULIC SNUBBER	VT-3	NS	082-105
F1.SN	1N27-H0017	HYDRAULIC SNUBBER	VT-3	2	082-105
F1.SN	1N27-H0018	HYDRAULIC SNUBBER	VT-3	NS	082-105
F1.SN	1N27-H0019	HYDRAULIC SNUBBER	VT-3	NS	082-105
F1.SP	1N27-H0022	VARIABLE SPRING (WA) (TANDEM)	VT-3	2	082-106
F1.SP	1N27-H0023	VARIABLE SPRING	VT-3	NS	082-105
F1.SP	1N27-H0024	VARIABLE SPRING	VT-3	NS	082-105
F1.SP	1N27-H0027	VARIABLE SPRING (TANDEM)	VT-3	NS	082-105
F1.SP	1N27-H0028	VARIABLE SPRING (TANDEM)	VT-3	NS	082-102
F1.G	1N27-H0029	RIGID GUIDE (WA)	VT-3	1	082-102
F1.G	1N27-H0030	RIGID GUIDE (WA)	VT-3	NS	082-105
F2.G	1N27-H0031	RIGID GUIDE (WA)	VT-3	NS	082-104
F2.G	1N27-H0032	RIGID GUIDE (WA)	VT-3	3	082-101
F1.50	1N27-H0033	RIGID GUIDE (AUGMENTED HEPIBER)	VT-3	2	082-104
F1.50	1N27-H0034	RIGID GUIDE (AUGMENTED HEPIBER)	VT-3	2	082-101
F1.50	1N27-H1078	RIGID GUIDE (AUGMENTED HEPIBER)	VT-3	2	971-102
F1.50	1N27-H1127	RIGID GUIDE (AUGMENTED HEPIBER)	VT-3	3	971-101
F1.50	1N27-H1129	RIGID GUIDE (AUGMENTED HEPIBER)	VT-3	3	971-101

ITEM NO.	MARK NO.	COMPONENT DESCRIPTION	EXAM METHOD	PERIOD SCHED.	ISI ISO SS-305-
		EXAMINATION CATEGORY: F-A			
F1.E	1N27-P121-SP1	RIGID GUIDE (INSIDE PENETRATION GUARD PIPE)	VT-3	NS	082-101
F1.E	1N27-P414-SP1	RIGID GUIDE (INSIDE PENETRATION GUARD PIPE)	VT-3	NS	082-104
F1.A	1N27-P121-SP	ANCHOR (WA)	VT-3	NS	082-101
F1.A	1N27-P414-SP	ANCHOR (WA)	VT-3	3	082-104
F1.40	1P42-A001A-SP	SURGE TANK ANCHOR (WA)	VT-3	1	621-113
F1.40	1P42-A001B-SP	SURGE TANK ANCHOR (WA)	VT-3	NS	621-113
F1.40	1P42-B001A-SP	HEAT EXCHANGER ANCHOR (WA)	VT-3	1	621-112
F1.40	1P42-B001B-SP	HEAT EXCHANGER ANCHOR (WA)	VT-3	NS	621-112
F1.40	1P42-C001A-SP	PUMP ANCHOR (WA)	VT-3	2	621-102
F1.40	1P42-C001B-SP	PUMP ANCHOR (WA)	VT-3	NS	621-109
F3.G	1P42-H0102	RIGID GUIDE (WA)	VT-3	NS	621-106
F3.ST	1P42-H0103	RIGID STRUT	VT-3	NS	621-106
F3.G	1P42-H0104	RIGID GUIDE	VT-3	NS	621-108
F3.ST	1P42-H0105	RIGID STRUT	VT-3	1	621-108
F3.STm	1P42-H0106	RIGID STRUT	VT-3	NS	621-108
F3.R	1P42-H0107	RIGID ROD	VT-3	NS	621-108
F3.ST	1P42-H0108	RIGID STRUT (WA)	VT-3	NS	621-108
F3.R	1P42-H0109	RIGID ROD	VT-3	NS	621-108
F3.R	1P42-H0110	RIGID ROD (WA)	VT-3	NS	621-106
F3.G	1P42-H0111	RIGID GUIDE (WA)	VT-3	NS	621-106
F3.SP	1P42-H0112	VARIABLE SPRING (WA)	VT-3	3	621-106
F3.Gs	1P42-H0113	RIGID GUIDE	VT-3	NS	621-106
F3.Gs	1P42-H0114	RIGID GUIDE	VT-3	NS	621-106
F3.G	1P42-H0115	RIGID GUIDE (WA)	VT-3	NS	621-107
F3.ST	1P42-H0116	RIGID STRUT	VT-3	NS	621-107
F3.ST	1P42-H0117	RIGID STRUT	VT-3	NS	621-107
F3.R	1P42-H0118	RIGID ROD	VT-3	NS	621-106
F3.Gs	1P42-H0119	RIGID GUIDE	VT-3	NS	621-106
F3.SP	1P42-H0120	VARIABLE SPRING (WA)	VT-3	NS	621-106
F3.Gs	1P42-H0121	RIGID GUIDE	VT-3	NS	621-106
F3.Gs	1P42-H0122	RIGID GUIDE (WA)	VT-3	1	621-106
F3.ST	1P42-H0123	RIGID STRUT (WA)	VT-3	NS	621-107
F3.Gs	1P42-H0124	RIGID GUIDE	VT-3	NS	621-101
F3.R	1P42-H0125	RIGID ROD	VT-3	1	621-108
F3.ST	1P42-H0138	RIGID STRUT (TANDEM)	VT-3	NS	621-108
F3.ST	1P42-H0139	RIGID STRUT (TANDEM)	VT-3	NS	621-108
F3.Gs	1P42-H0140	RIGID GUIDE	VT-3	NS	621-107
F3.G	1P42-H0142	RIGID GUIDE	VT-3	NS	621-109
F3.STm	1P42-H0143	RIGID STRUT	VT-3	NS	621-109

ITEM NO.	MARK NO.	COMPONENT DESCRIPTION	EXAM METHOD	PERIOD SCHED.	ISI ISO SS-305-
		EXAMINATION CATEGORY: F-A			
F3.Gs	1P42-H0145	RIGID GUIDE	VT-3	NS	621-109
F3.R	1P42-H0146	RIGID ROD	VT-3	NS	621-109
F3.R	1P42-H0147	RIGID ROD	VT-3	NS	621-109
F3.G	1P42-H0148	RIGID GUIDE (WA)	VT-3	NS	621-109
F3.G	1P42-H0149	RIGID GUIDE	VT-3	NS	621-109
F3.Gs	1P42-H0156	RIGID GUIDE	VT-3	NS	621-109
F3.ST	1P42-H0157	RIGID STRUT	VT-3	NS	621-109
F3.G	1P42-H0158	RIGID GUIDE	VT-3	NS	621-109
F3.R	1P42-H0159	RIGID ROD	VT-3	NS	621-109
F3.ST	1P42-H0160	RIGID STRUT	VT-3	NS	621-109
F3.G	1P42-H0161	RIGID GUIDE	VT-3	NS	621-111
F3.G	1P42-H0162	RIGID GUIDE	VT-3	NS	621-111
F3.G	1P42-H0163	RIGID GUIDE	VT-3	3	621-110
F3.G	1P42-H0164	RIGID GUIDE	VT-3	NS	621-110
F3.A	1P42-H0171	ANCHOR (WA)	VT-3	NS	621-107
F3.R	1P42-H0181	RIGID ROD	VT-3	NS	621-109
F3.A	1P42-H0191	ANCHOR (WA)	VT-3	NS	621-101
F3.ST	1P42-H0194	RIGID STRUT	VT-3	NS	621-101
F3.Gs	1P42-H0195	RIGID GUIDE	VT-3	NS	621-108
F3.R	1P42-H0196	RIGID ROD	VT-3	NS	621-101
F3.ST	1P42-H0197	RIGID STRUT (TANDEM)	VT-3	NS	621-102
F3.G	1P42-H0198	RIGID GUIDE	VT-3	NS	621-102
F3.R	1P42-H0199	RIGID SUPPORT	VT-3	NS	621-102
F3.Gs	1P42-H0204	RIGID GUIDE	VT-3	NS	621-102
F3.ST	1P42-H0205	RIGID STRUT	VT-3	NS	621-102
F3.Gs	1P42-H0206	RIGID GUIDE	VT-3	NS	621-102
F3.R	1P42-H0208	RIGID ROD	VT-3	NS	621-103
F3.R	1P42-H0209	RIGID ROD	VT-3	2	621-103
F3.A	1P42-H0210	ANCHOR (WA)	VT-3	3	621-103
F3.SP	1P42-H0211	VARIABLE SPRING	VT-3	NS	621-103
F3.STm	1P42-H0212	RIGID STRUT	VT-3	NS	621-103
F3.ST	1P42-H0213	RIGID STRUT (WA)	VT-3	NS	621-103
F3.STm	1P42-H0215	RIGID STRUT	VT-3	3	621-102
F3.G	1P42-H0216	RIGID GUIDE	VT-3	NS	621-101
F3.G	1P42-H0217	RIGID GUIDE	VT-3	2	621-102
F3.ST	1P42-H0218	RIGID STRUT	VT-3	NS	621-103
F3.A	1P42-H0219	ANCHOR (WA)	VT-3	NS	621-109
F3.R	1P42-H0220	RIGID ROD	VT-3	NS	621-104
F3.G	1P42-H0221	RIGID GUIDE (WA)	VT-3	NS**	621-104
F3.G	1P42-H0222	RIGID GUIDE (WA)	VT-3	NS**	621-104

ITEM NO.	MARK NO.	COMPONENT DESCRIPTION	EXAM METHOD	PERIOD SCHED.	ISI ISO SS-305-
		EXAMINATION CATEGORY: F-A			
F3.R	1P42-H0223	RIGID ROD	VT-3	NS	621-104
F3.SP	1P42-H0225	VARIABLE SPRING	VT-3	NS	621-103
F3.ST	1P42-H0226	RIGID STRUT	VT-3	NS	621-103
F3.ST	1P42-H0227	RIGID STRUT	VT-3	NS	621-105
F3.ST	1P42-H0228	RIGID STRUT	VT-3	NS	621-105
F3.ST	1P42-H0229	RIGID STRUT	VT-3	NS	621-105
F3.ST	1P42-H0231	RIGID STRUT	VT-3	2	621-105
F3.ST	1P42-H0232	RIGID STRUT	VT-3	NS	621-105
F3.R	1P42-H0233	RIGID ROD	VT-3	NS	621-105
F3.G	1P42-H0234	RIGID GUIDE (WA)	VT-3	NS	621-105
F3.R	1P42-H0235	RIGID ROD	VT-3	NS	621-105
F3.A	1P42-H0236	ANCHOR (WA)	VT-3	NS	621-105
F3.SP	1P42-H0237	VARIABLE SPRING	VT-3	NS	621-104
F3.ST	1P42-H0238	RIGID STRUT	VT-3	NS	621-104
F3.ST	1P42-H0239	RIGID STRUT (WA)	VT-3	NS	621-103
F3.ST	1P42-H0240	RIGID STRUT (WA) (TANDEM)	VT-3	NS	621-103
F3.ST	1P42-H0241	RIGID STRUT (WA)	VT-3	NS	621-104
F3.ST	1P42-H0242	RIGID STRUT (WA) (TANDEM)	VT-3	NS	621-104
F3.R	1P42-H1426	RIGID SUPPORT	VT-3	NS	621-110
F3.G	1P42-H1427	RIGID GUIDE	VT-3	NS	621-110
F3.R	1P42-H1428	RIGID SUPPORT	VT-3	NS	621-111
F3.G	1P42-H1429	RIGID GUIDE	VT-3	NS	621-111
F3.SP	1P42-H5003	VARIABLE SPRING	VT-3	NS	621-106
F1.40	1P45-C001A-SP	ANCHOR, PUMP SUPPORT (WA)	VT-3	1	791-108
F1.40	1P45-C001B-SP	ANCHOR, PUMP SUPPORT (WA)	VT-3	NS	791-109
F1.40	1P45-C002-SP	ANCHOR, PUMP SUPPORT (WA)	VT-3	2	791-107
F1.40	1P45-D002A-SP	ANCHOR, FILTER SUPPORT (WA)	VT-3	2	791-108
F1.40	1P45-D002B-SP	ANCHOR, FILTER SUPPORT (WA)	VT-3	NS	791-109
F1.40	1P45-D003-SP	ANCHOR, FILTER SUPPORT (WA)	VT-3	3	791-107
F3.G	1P45-H0001	RIGID GUIDE	VT-3	NS	792-103
F3.G	1P45-H0002	RIGID GUIDE	VT-3	NS	792-103
F3.G	1P45-H0003	RIGID GUIDE	VT-3	NS	792-103
F3.G	1P45-H0004	RIGID GUIDE	VT-3	1	792-103
F3.G	1P45-H0005	RIGID GUIDE	VT-3	NS	792-103
F3.G	1P45-H0006	RIGID GUIDE	VT-3	NS	792-103
F3.G	1P45-H0007	RIGID GUIDE	VT-3	NS	792-103
F3.G	1P45-H0008	RIGID GUIDE	VT-3	NS	792-103
F3.R	1P45-H0009	RIGID SUPPORT	VT-3	NS	792-103
F3.R	1P45-H0010	RIGID SUPPORT	VT-3	NS	791-107

ITEM NO.	MARK NO.	COMPONENT DESCRIPTION	EXAM METHOD	PERIOD SCHED.	ISI ISO SS-305-
		EXAMINATION CATEGORY: F-A			
F3.ST	1P45-H0011	RIGID STRUT	VT-3	NS	791-107
F3.G	1P45-H0012	RIGID GUIDE	VT-3	NS	791-107
F3.G	1P45-H0018	RIGID GUIDE	VT-3	NS	792-102
F3.A	1P45-H0020	ANCHOR (WA)	VT-3	NS	792-103
F3.A	1P45-H0021	ANCHOR (WA)	VT-3	NS	792-103
F3.A	1P45-H0022	ANCHOR (WA)	VT-3	NS**	792-106
F3.G	1P45-H0023	RIGID GUIDE	VT-3	NS	792-106
F3.G	1P45-H0024	RIGID GUIDE	VT-3	NS	792-106
F3.G	1P45-H0025	RIGID GUIDE	VT-3	3	792-106
F3.G	1P45-H0026	RIGID GUIDE	VT-3	NS	792-106
F3.G	1P45-H0027	RIGID GUIDE	VT-3	NS	792-106
F3.G	1P45-H0028	RIGID GUIDE	VT-3	NS	792-106
F3.G	1P45-H0029	RIGID GUIDE	VT-3	NS	792-106
F3.G	1P45-H0030	RIGID GUIDE	VT-3	NS	792-106
F3.R	1P45-H0031	RIGID SUPPORT	VT-3	NS	792-106
F3.SP	1P45-H0032	VARIABLE SPRING	VT-3	NS	792-105
F3.A	1P45-H0033	ANCHOR (WA)	VT-3	NS	792-105
F3.A	1P45-H0034	ANCHOR (WA)	VT-3	NS	792-106
F3.A	1P45-H0035	ANCHOR (WA)	VT-3	NS	792-117
F3.G	1P45-H0036	RIGID GUIDE	VT-3	NS	792-117
F3.G	1P45-H0037	RIGID GUIDE	VT-3	NS	792-117
F3.G	1P45-H0038	RIGID GUIDE	VT-3	NS	792-117
F3.G	1P45-H0039	RIGID GUIDE	VT-3	NS	792-117
F3.G	1P45-H0040	RIGID GUIDE	VT-3	NS	792-117
F3.G	1P45-H0041	RIGID GUIDE	VT-3	NS	792-116
F3.G	1P45-H0042	RIGID GUIDE	VT-3	NS	792-116
F3.G	1P45-H0043	RIGID GUIDE	VT-3	NS	792-116
F3.G	1P45-H0044	RIGID GUIDE	VT-3	2	792-116
F3.ST	1P45-H0045	RIGID STRUT	VT-3	NS	792-116
F3.R	1P45-H0046	RIGID ROD	VT-3	1	792-116
F3.A	1P45-H0047	ANCHOR (WA)	VT-3	NS	792-116
F3.A	1P45-H0048	ANCHOR (WA)	VT-3	NS	792-115
F3.A	1P45-H0049	ANCHOR (WA)	VT-3	NS**	792-112
F3.G	1P45-H0050	RIGID GUIDE	VT-3	NS	792-112
F3.G	1P45-H0051	RIGID GUIDE	VT-3	NS	792-112
F3.G	1P45-H0052	RIGID GUIDE	VT-3	NS	792-112
F3.G	1P45-H0053	RIGID GUIDE	VT-3	NS	792-112
F3.G	1P45-H0054	RIGID GUIDE	VT-3	NS	792-112
F3.G	1P45-H0055	RIGID GUIDE	VT-3	NS	792-112
F3.G	1P45-H0056	RIGID GUIDE	VT-3	NS	792-112

ITEM NO.	MARK NO.	COMPONENT DESCRIPTION	EXAM METHOD	PERIOD SCHED.	ISI ISO SS-305-
		EXAMINATION CATEGORY: F-A			
F3.G	1P45-H0057	RIGID GUIDE	VT-3	NS	792-112
F3.R	1P45-H0058	RIGID SUPPORT	VT-3	NS	792-112
F3.R	1P45-H0059	RIGID ROD	VT-3	NS	792-112
F3.A	1P45-H0060	ANCHOR (WA)	VT-3	NS	792-112
F3.G	1P45-H0061	RIGID GUIDE	VT-3	NS	792-112
F3.G	1P45-H0062	RIGID GUIDE	VT-3	NS	792-112
F3.G	1P45-H0063	RIGID GUIDE	VT-3	3	792-112
F3.G	1P45-H0064	RIGID GUIDE	VT-3	NS	792-112
F3.G	1P45-H0065	RIGID GUIDE	VT-3	NS	792-112
F3.G	1P45-H0066	RIGID GUIDE	VT-3	NS	792-112
F3.R	1P45-H0067	RIGID SUPPORT	VT-3	NS	792-112
F3.STm	1P45-H0068	RIGID STRUT	VT-3	NS	792-112
F3.STm	1P45-H0069	RIGID STRUT	VT-3	NS	792-112
F3.A	1P45-H0070	ANCHOR (WA)	VT-3	1	792-112
F3.SP	1P45-H0071	VARIABLE SPRING (WA) (TANDEM)	VT-3	1	792-113
F3.STm	1P45-H0072	RIGID STRUT	VT-3	NS	792-112
F3.ST	1P45-H0073	RIGID STRUT	VT-3	NS	792-113
F3.STm	1P45-H0074	RIGID STRUT	VT-3	NS	792-113
F3.SP	1P45-H0075	VARIABLE SPRING (TANDEM)	VT-3	NS	792-113
F3.STm	1P45-H0076	RIGID STRUT	VT-3	NS	792-113
F3.A	1P45-H0077	ANCHOR (WA)	VT-3	NS	792-113
F3.G	1P45-H0078	RIGID GUIDE	VT-3	NS	792-117
F3.G	1P45-H0079	RIGID GUIDE	VT-3	NS	792-117
F3.G	1P45-H0080	RIGID GUIDE	VT-3	NS	792-117
F3.G	1P45-H0081	RIGID GUIDE	VT-3	1	792-117
F3.G	1P45-H0082	RIGID GUIDE	VT-3	NS	792-117
F3.G	1P45-H0083	RIGID GUIDE	VT-3	NS	792-117
F3.R	1P45-H0084	RIGID SUPPORT	VT-3	NS	792-117
F3.R	1P45-H0085	RIGID ROD	VT-3	NS	792-117
F3.R	1P45-H0086	RIGID SUPPORT	VT-3	NS	792-117
F3.G	1P45-H0087	RIGID GUIDE	VT-3	NS	792-117
F3.G	1P45-H0088	RIGID GUIDE	VT-3	NS	792-117
F3.A	1P45-H0089	ANCHOR (WA)	VT-3	NS	792-118
F3.R	1P45-H0090	RIGID SUPPORT	VT-3	NS	791-111
F3.G	1P45-H0091	RIGID GUIDE	VT-3	NS	791-111
F3.G	1P45-H0092	RIGID GUIDE	VT-3	NS	791-111
F3.G	1P45-H0093	RIGID GUIDE	VT-3	NS	791-111
F3.G	1P45-H0094	RIGID GUIDE	VT-3	2	791-111
F3.G	1P45-H0095	RIGID GUIDE	VT-3	NS	791-111
F3.G	1P45-H0096	RIGID GUIDE	VT-3	NS	791-111

ITEM NO.	MARK NO.	COMPONENT DESCRIPTION	EXAM METHOD	PERIOD SCHED.	ISI ISO SS-305-
		EXAMINATION CATEGORY: F-A			
F3.SN	1P45-H0097	MECHANICAL SNUBBER (WA)	VT-3	NS	791-111
F3.SP	1P45-H0098	VARIABLE SPRING	VT-3	NS	791-111
F3.ST	1P45-H0099	RIGID STRUT	VT-3	NS	791-111
F3.A	1P45-H0100	ANCHOR (WA)	VT-3	NS	791-111
F3.STm	1P45-H0101	RIGID STRUT	VT-3	1	792-118
F3.STm	1P45-H0102	RIGID STRUT (TANDEM)	VT-3	NS	792-118
F3.SP	1P45-H0103	VARIABLE SPRING	VT-3	NS	792-118
F3.SN	1P45-H0104	MECHANICAL SNUBBER (TANDEM)	VT-3	NS	792-118
F3.G	1P45-H0105	RIGID GUIDE	VT-3	NS	792-107
F3.G	1P45-H0106	RIGID GUIDE	VT-3	NS	792-107
F3.G	1P45-H0107	RIGID GUIDE	VT-3	NS	792-107
F3.G	1P45-H0108	RIGID GUIDE	VT-3	NS	792-107
F3.G	1P45-H0109	RIGID GUIDE	VT-3	NS	792-107
F3.G	1P45-H0110	RIGID GUIDE	VT-3	NS	792-107
F3.R	1P45-H0111	RIGID SUPPORT	VT-3	NS	792-107
F3.ST	1P45-H0112	RIGID STRUT	VT-3	NS	792-107
F3.G	1P45-H0113	RIGID GUIDE	VT-3	NS	792-107
F3.G	1P45-H0114	RIGID GUIDE	VT-3	NS	792-107
F3.G	1P45-H0115	RIGID GUIDE	VT-3	3	792-107
F3.G	1P45-H0116	RIGID GUIDE	VT-3	NS	792-107
F3.G	1P45-H0117	RIGID GUIDE	VT-3	NS	792-107
F3.G	1P45-H0118	RIGID GUIDE	VT-3	NS	792-107
F3.G	1P45-H0119	RIGID GUIDE	VT-3	1	792-107
F3.G	1P45-H0120	RIGID GUIDE	VT-3	NS	792-107
F3.G	1P45-H0121	RIGID GUIDE	VT-3	NS	792-107
F3.R	1P45-H0122	RIGID SUPPORT	VT-3	NS	792-107
F3.A	1P45-H0123	ANCHOR (WA)	VT-3	NS	792-108
F3.ST	1P45-H0124	RIGID STRUT (WA) (TANDEM)	VT-3	NS	792-107
F3.SP	1P45-H0125	VARIABLE SPRING	VT-3	NS	792-107
F3.SN	1P45-H0126	HYDRAULIC SNUBBER	VT-3	NS	792-107
F3.A	1P45-H0127	ANCHOR (WA)	VT-3	NS**	792-107
F3.A	1P45-H0128	ANCHOR (WA)	VT-3	NS	792-107
F3.STm	1P45-H0129	RIGID STRUT	VT-3	NS	792-108
F3.ST	1P45-H0130	RIGID STRUT (TANDEM)	VT-3	NS	792-108
F3.SP	1P45-H0131	VARIABLE SPRING	VT-3	NS	792-108
F3.SN	1P45-H0132	MECHANICAL SNUBBER (TANDEM)	VT-3	NS	792-108
F3.G	1P45-H0133	RIGID GUIDE	VT-3	NS	792-103
F3.R	1P45-H0134	RIGID SUPPORT	VT-3	NS	792-103
F3.G	1P45-H0135	RIGID GUIDE	VT-3	NS	792-103
F3.G	1P45-H0136	RIGID GUIDE	VT-3	NS	792-103

ITEM NO.	MARK NO.	COMPONENT DESCRIPTION	EXAM METHOD	PERIOD SCHED.	ISI ISO SS-305-
		EXAMINATION CATEGORY: F-A			
F3.G	1P45-H0137	RIGID GUIDE	VT-3	NS	792-103
F3.G	1P45-H0138	RIGID GUIDE	VT-3	3	792-103
F3.G	1P45-H0139	RIGID GUIDE	VT-3	NS	792-103
F3.SP	1P45-H0140	VARIABLE SPRING	VT-3	NS	792-103
F3.ST	1P45-H0141	RIGID STRUT	VT-3	NS	792-103
F3.G	1P45-H0142	RIGID GUIDE	VT-3	NS	792-104
F3.G	1P45-H0143	RIGID GUIDE	VT-3	NS	792-104
F3.G	1P45-H0144	RIGID GUIDE	VT-3	NS	792-104
F3.G	1P45-H0145	RIGID GUIDE	VT-3	NS	792-104
F3.G	1P45-H0146	RIGID GUIDE	VT-3	NS	792-104
F3.G	1P45-H0147	RIGID GUIDE	VT-3	NS	792-104
F3.G	1P45-H0148	RIGID GUIDE	VT-3	NS	792-104
F3.G	1P45-H0149	RIGID GUIDE	VT-3	NS	792-104
F3.G	1P45-H0150	RIGID GUIDE	VT-3	2	792-104
F3.G	1P45-H0151	RIGID GUIDE	VT-3	NS	792-104
F3.G	1P45-H0152	RIGID GUIDE	VT-3	NS	792-104
F3.G	1P45-H0153	RIGID GUIDE	VT-3	NS	792-104
F3.G	1P45-H0154	RIGID GUIDE	VT-3	NS	792-104
F3.G	1P45-H0155	RIGID GUIDE	VT-3	NS	792-104
F3.SP	1P45-H0156	VARIABLE SPRING (TANDEM)	VT-3	2	792-104
F3.ST	1P45-H0157	RIGID STRUT	VT-3	NS	792-104
F3.STm	1P45-H0158	RIGID STRUT	VT-3	NS	792-104
F3.A	1P45-H0159	ANCHOR (WA)	VT-3	3	792-104
F3.ST	1P45-H0160	RIGID STRUT	VT-3	NS	792-104
F3.ST	1P45-H0161	RIGID STRUT	VT-3	NS	792-104
F3.G	1P45-H0162	RIGID GUIDE	VT-3	NS**	792-104
F3.ST	1P45-H0163	RIGID STRUT	VT-3	NS	792-104
F3.SP	1P45-H0164	VARIABLE SPRING	VT-3	NS	792-104
F3.G	1P45-H0165	RIGID GUIDE	VT-3	NS	792-104
F3.ST	1P45-H0166	RIGID STRUT (TANDEM)	VT-3	NS	792-104
F3.SP	1P45-H0167	VARIABLE SPRING (TANDEM)	VT-3	NS	792-104
F3.ST	1P45-H0168	RIGID STRUT (TANDEM)	VT-3	NS	792-104
F3.ST	1P45-H0169	RIGID STRUT (WA)	VT-3	NS	792-104
F3.R	1P45-H0170	RIGID SUPPORT (WA)	VT-3	NS	791-106
F3.SP	1P45-H0171	VARIABLE SPRING	VT-3	NS	791-106
F3.A	1P45-H0172	ANCHOR (WA)	VT-3	NS	791-106
F3.STm	1P45-H0173	RIGID STRUT	VT-3	2	791-106
F3.SP	1P45-H0175	VARIABLE SPRING (WA)	VT-3	NS	791-106
F3.SN	1P45-H0176	MECHANICAL SNUBBER (TANDEM)	VT-3	NS	791-106
F3.SN	1P45-H0177	MECHANICAL SNUBBER (TANDEM)	VT-3	NS	791-106

ITEM NO.	MARK NO.	COMPONENT DESCRIPTION	EXAM METHOD	PERIOD SCHED.	ISI ISO SS-305-
		EXAMINATION CATEGORY: F-A			
F3.SP	1P45-H0178	VARIABLE SPRING	VT-3	NS	791-106
F3.SN	1P45-H0179	MECHANICAL SNUBBER	VT-3	NS	791-106
F3.SP	1P45-H0180	VARIABLE SPRING	VT-3	NS	791-106
F3.ST	1P45-H0181	RIGID STRUT (TANDEM)	VT-3	NS	791-106
F3.ST	1P45-H0182	RIGID STRUT	VT-3	NS	791-106
F3.SN	1P45-H0183	MECHANICAL SNUBBER (WA)	VT-3	1	791-106
F3.R	1P45-H0184	RIGID ROD	VT-3	NS	791-106
F3.SN	1P45-H0185	MECHANICAL SNUBBER (TANDEM)	VT-3	NS	791-106
F3.SN	1P45-H0186	MECHANICAL SNUBBER (WA)	VT-3	NS	791-106
F3.R	1P45-H0187	RIGID ROD	VT-3	NS	791-106
F3.R	1P45-H0188	RIGID ROD	VT-3	NS	791-106
F3.A	1P45-H0189	ANCHOR (WA)	VT-3	NS	791-106
F3.STm	1P45-H0190	RIGID STRUT	VT-3	NS	791-113
F3.G	1P45-H0191	RIGID GUIDE (WA)	VT-3	NS**	791-113
F3.SN	1P45-H0192	MECHANICAL SNUBBER	VT-3	NS	791-113
F3.ST	1P45-H0193	RIGID STRUT	VT-3	NS	791-113
F3.ST	1P45-H0194	RIGID STRUT	VT-3	NS	791-113
F3.ST	1P45-H0195	RIGID STRUT	VT-3	NS	791-113
F3.ST	1P45-H0196	RIGID STRUT	VT-3	NS	791-113
F3.ST	1P45-H0197	RIGID STRUT	VT-3	NS	791-113
F3.ST	1P45-H0198	RIGID STRUT	VT-3	NS	791-113
F3.Gs	1P45-H0199	RIGID GUIDE	VT-3	NS	791-113
F3.Gs	1P45-H0200	RIGID GUIDE	VT-3	NS	791-113
F3.R	1P45-H0201	RIGID SUPPORT	VT-3	3	791-113
F3.Gs	1P45-H0202	RIGID GUIDE	VT-3	NS	791-113
F3.R	1P45-H0203	RIGID SUPPORT	VT-3	NS	791-113
F3.R	1P45-H0204	RIGID SUPPORT	VT-3	NS	791-113
F3.Gs	1P45-H0205	RIGID GUIDE	VT-3	1	791-113
F3.A	1P45-H0210	ANCHOR (WA)	VT-3	NS	791-113
F3.SP	1P45-H0211	VARIABLE SPRING	VT-3	NS	791-111
F3.SN	1P45-H0212	MECHANICAL SNUBBER (WA)	VT-3	NS	791-112
F3.STm	1P45-H0213	RIGID STRUT	VT-3	NS	791-111
F3.ST	1P45-H0215	RIGID STRUT (WA)	VT-3	NS	791-112
F3.SN	1P45-H0216	MECHANICAL SNUBBER	VT-3	3	791-112
F3.R	1P45-H0217	RIGID ROD	VT-3	NS	791-112
F3.Gs	1P45-H0218	RIGID GUIDE	VT-3	NS	791-112
F3.R	1P45-H0219	RIGID ROD	VT-3	NS	791-112
F3.R	1P45-H0220	RIGID ROD	VT-3	NS	791-112
F3.Gs	1P45-H0221	RIGID GUIDE	VT-3	NS	791-112

ITEM NO.	MARK NO.	COMPONENT DESCRIPTION	EXAM METHOD	PERIOD SCHED.	ISI ISO SS-305-
		EXAMINATION CATEGORY: F-A			
F3.SN	1P45-H0222	MECHANICAL SNUBBER (WA)	VT-3	NS	791-112
F3.R	1P45-H0223	RIGID ROD	VT-3	NS	791-112
F3.R	1P45-H0224	RIGID ROD	VT-3	NS	791-112
F3.Gs	1P45-H0225	RIGID GUIDE	VT-3	NS	791-112
F3.STm	1P45-H0226	RIGID STRUT (WA)	VT-3	NS	791-112
F3.R	1P45-H0227	RIGID ROD	VT-3	NS	791-112
F3.R	1P45-H0228	RIGID ROD	VT-3	NS	791-112
F3.A	1P45-H0229	ANCHOR (WA)	VT-3	NS	791-112
F3.STm	1P45-H0230	RIGID STRUT	VT-3	NS	791-106
F3.STm	1P45-H0231	RIGID STRUT	VT-3	NS	791-106
F3.A	1P45-H0232	ANCHOR (WA)	VT-3	NS	791-103
F3.R	1P45-H0233	RIGID ROD	VT-3	NS	791-103
F3.R	1P45-H0235	RIGID ROD	VT-3	NS	791-103
F3.Gs	1P45-H0236	RIGID GUIDE	VT-3	NS	791-103
F3.R	1P45-H0237	RIGID ROD	VT-3	NS	791-103
F3.R	1P45-H0239	RIGID ROD	VT-3	NS	791-103
F3.ST	1P45-H0240	RIGID STRUT	VT-3	1	791-103
F3.R	1P45-H0241	RIGID ROD	VT-3	NS	791-103
F3.R	1P45-H0242	RIGID ROD	VT-3	NS	791-103
F3.A	1P45-H0243	ANCHOR (WA)	VT-3	2	791-102
F3.R	1P45-H0244	RIGID ROD	VT-3	NS	791-103
F3.ST	1P45-H0245	RIGID STRUT (TANDEM)	VT-3	NS	791-103
F3.R	1P45-H0246	RIGID ROD	VT-3	NS	791-103
F3.Gs	1P45-H0247	RIGID GUIDE	VT-3	NS	791-103
F3.R	1P45-H0248	RIGID ROD	VT-3	2	791-103
F3.Gs	1P45-H0249	RIGID GUIDE	VT-3	NS	791-103
F3.R	1P45-H0250	RIGID ROD	VT-3	NS	791-103
F3.Gs	1P45-H0251	RIGID GUIDE	VT-3	NS	791-103
F3.ST	1P45-H0252	RIGID STRUT	VT-3	NS	791-103
F3.Gs	1P45-H0253	RIGID GUIDE	VT-3	NS	791-103
F3.ST	1P45-H0254	RIGID STRUT	VT-3	NS	791-103
F3.G	1P45-H0255	RIGID GUIDE	VT-3	NS	791-103
F3.ST	1P45-H0256	RIGID STRUT (WA) (TANDEM)	VT-3	NS	791-103
F3.R	1P45-H0257	RIGID SUPPORT	VT-3	NS	791-104
F3.G	1P45-H0258	RIGID GUIDE	VT-3	NS	791-104
F3.R	1P45-H0259	RIGID SUPPORT	VT-3	NS	791-104
F3.G	1P45-H0260	RIGID GUIDE	VT-3	NS	791-104
F3.G	1P45-H0261	RIGID GUIDE	VT-3	NS	791-104
F3.G	1P45-H0262	RIGID GUIDE	VT-3	NS	791-104
F3.G	1P45-H0263	RIGID GUIDE	VT-3	NS	791-104

ITEM NO.	MARK NO.	COMPONENT DESCRIPTION	EXAM METHOD	PERIOD SCHED.	ISI ISO SS-305-
		EXAMINATION CATEGORY: F-A			
F3.G	1P45-H0264	RIGID GUIDE	VT-3	NS	791-104
F3.G	1P45-H0265	RIGID GUIDE	VT-3	NS	791-104
F3.G	1P45-H0266	RIGID GUIDE	VT-3	NS	791-104
F3.G	1P45-H0267	RIGID GUIDE	VT-3	2	791-104
F3.G	1P45-H0268	RIGID GUIDE	VT-3	NS	791-104
F3.G	1P45-H0269	RIGID GUIDE	VT-3	NS	791-104
F3.SN	1P45-H0270	HYDRAULIC SNUBBER	VT-3	NS	791-104
F3.Gs	1P45-H0271	RIGID GUIDE (WA)	VT-3	NS**	791-104
F3.SP	1P45-H0272	VARIABLE SPRING (WA) (TANDEM)	VT-3	NS	791-104
F3.ST	1P45-H0273	RIGID STRUT (WA) (TANDEM)	VT-3	NS	791-104
F3.G	1P45-H0274	RIGID GUIDE (WA)	VT-3	NS	791-105
F3.SP	1P45-H0277	VARIABLE SPRING (WA) (TANDEM)	VT-3	NS	791-105
F3.ST	1P45-H0279	RIGID STRUT	VT-3	NS	791-105
F3.ST	1P45-H0280	RIGID STRUT	VT-3	NS	791-105
F3.R	1P45-H0281	RIGID ROD	VT-3	NS	791-105
F3.R	1P45-H0282	RIGID ROD	VT-3	NS	791-105
F3.ST	1P45-H0283	RIGID STRUT	VT-3	NS	791-105
F3.R	1P45-H0284	RIGID ROD	VT-3	NS	791-105
F3.ST	1P45-H0285	RIGID STRUT	VT-3	NS	791-105
F3.R	1P45-H0286	RIGID ROD	VT-3	NS	791-105
F3.A	1P45-H0287	ANCHOR (WA)	VT-3	NS	791-105
F3.ST	1P45-H0288	RIGID STRUT	VT-3	NS	791-106
F3.SN	1P45-H0292	MECHANICAL SNUBBER	VT-3	NS	792-104
F3.A	1P45-H0293	ANCHOR (WA)	VT-3	NS	792-109
F3.R	1P45-H0294	RIGID SUPPORT (WA)	VT-3	NS	792-109
F3.G	1P45-H0295	RIGID GUIDE	VT-3	NS	792-109
F3.G	1P45-H0296	RIGID GUIDE	VT-3	NS	792-109
F3.G	1P45-H0297	RIGID GUIDE (WA)	VT-3	NS	792-109
F3.Gs	1P45-H0298	RIGID GUIDE (WA)	VT-3	NS	792-109
F3.ST	1P45-H0300	RIGID STRUT	VT-3	NS	792-109
F3.G	1P45-H0301	RIGID GUIDE	VT-3	NS	792-106
F3.G	1P45-H0302	RIGID GUIDE	VT-3	NS	792-106
F3.G	1P45-H0303	RIGID GUIDE	VT-3	NS	792-106
F3.G	1P45-H0304	RIGID GUIDE	VT-3	NS	792-106
F3.G	1P45-H0305	RIGID GUIDE	VT-3	NS	792-106
F3.G	1P45-H0306	RIGID GUIDE	VT-3	NS	792-106
F3.G	1P45-H0307	RIGID GUIDE	VT-3	NS	792-106
F3.A	1P45-H0308	ANCHOR (WA)	VT-3	NS	792-114
F3.R	1P45-H0309	RIGID SUPPORT (WA)	VT-3	NS	792-115
F3.G	1P45-H0310	RIGID GUIDE	VT-3	NS	792-115

ITEM NO.	MARK NO.	COMPONENT DESCRIPTION	EXAM METHOD	PERIOD SCHED.	ISI ISO SS-305-
		EXAMINATION CATEGORY: F-A			
F3.G	1P45-H0311	RIGID GUIDE	VT-3	NS**	792-115
F3.G	1P45-H0312	RIGID GUIDE (WA)	VT-3	1	792-115
F3.G	1P45-H0313	RIGID GUIDE (WA)	VT-3	NS	792-115
F3.G	1P45-H0345	RIGID GUIDE	VT-3	NS	792-115
F3.G	1P45-H0346	RIGID GUIDE	VT-3	NS	792-115
F3.G	1P45-H0347	RIGID GUIDE	VT-3	NS	792-115
F3.G	1P45-H0348	RIGID GUIDE	VT-3	NS	792-115
F3.G	1P45-H0349	RIGID GUIDE	VT-3	NS	792-115
F3.G	1P45-H0350	RIGID GUIDE	VT-3	NS	792-115
F3.G	1P45-H0351	RIGID GUIDE	VT-3	NS	792-115
F3.G	1P45-H0352	RIGID GUIDE	VT-3	NS	792-115
F3.SN	1P45-H0353	MECHANICAL SNUBBER (WA) (TANDEM)	VT-3	NS	792-104
F3.G	1P45-H0354	RIGID GUIDE	VT-3	NS	792-103
F3.ST	1P45-H0357	RIGID STRUT (WA)	VT-3	3	792-103
F3.R	1P45-H0358	RIGID SUPPORT	VT-3	NS	792-116
F3.G	1P45-H0359	RIGID GUIDE	VT-3	NS	792-116
F3.G	1P45-H0360	RIGID GUIDE	VT-3	3	792-116
F3.G	1P45-H0362	RIGID GUIDE	VT-3	NS	792-110
F3.G	1P45-H0363	RIGID GUIDE	VT-3	NS	792-110
F3.G	1P45-H0364	RIGID GUIDE	VT-3	NS	792-110
F3.G	1P45-H0365	RIGID GUIDE (WA)	VT-3	NS	792-110
F3.R	1P45-H0366	RIGID SUPPORT	VT-3	NS	792-110
F3.G	1P45-H0367	RIGID GUIDE	VT-3	NS	792-110
F3.G	1P45-H0368	RIGID GUIDE	VT-3	2	792-110
F3.R	1P45-H0369	RIGID SUPPORT (WA)	VT-3	NS	792-110
F3.G	1P45-H0370	RIGID GUIDE	VT-3	NS	792-102
F3.G	1P45-H0371	RIGID GUIDE	VT-3	NS	792-110
F3.G	1P45-H0372	RIGID GUIDE	VT-3	NS	792-110
F3.G	1P45-H0373	RIGID GUIDE	VT-3	NS	792-111
F3.G	1P45-H0374	RIGID GUIDE	VT-3	NS	792-111
F3.G	1P45-H0376	RIGID GUIDE	VT-3	NS	792-105
F3.G	1P45-H0380	RIGID GUIDE	VT-3	NS	792-102
F3.G	1P45-H0381	RIGID GUIDE	VT-3	NS	792-102
F3.ST	1P45-H0382	RIGID STRUT (WA)	VT-3	2	792-102
F3.G	1P45-H0383	RIGID GUIDE	VT-3	NS	792-110
F3.G	1P45-H0384	RIGID GUIDE	VT-3	NS	792-102
F3.ST	1P45-H0385	RIGID STRUT	VT-3	NS	792-102
F3.G	1P45-H0386	RIGID GUIDE (WA)	VT-3	NS	792-102
F3.ST	1P45-H0387	RIGID STRUT	VT-3	NS	792-102
F3.A	1P45-H0388	ANCHOR (WA)	VT-3	NS	792-101

ITEM NO.	MARK NO.	COMPONENT DESCRIPTION	EXAM METHOD	PERIOD SCHED.	ISI ISO SS-305-
		EXAMINATION CATEGORY: F-A			
F3.A	1P45-H0389	ANCHOR (WA)	VT-3	NS	792-111
F3.G	1P45-H0390	RIGID GUIDE	VT-3	NS	792-105
F3.G	1P45-H0391	RIGID GUIDE	VT-3	1	792-105
F3.G	1P45-H0392	RIGID GUIDE	VT-3	NS	792-105
F3.G	1P45-H0393	RIGID GUIDE	VT-3	NS	792-105
F3.ST	1P45-H0395	RIGID STRUT (WA)	VT-3	NS	791-105
F3.ST	1P45-H0396	RIGID STRUT	VT-3	NS	791-105
F3.G	1P45-H0397	RIGID GUIDE	VT-3	NS**	791-108
F3.G	1P45-H0398	RIGID GUIDE	VT-3	NS**	791-108
F3.G	1P45-H0399	RIGID GUIDE	VT-3	NS**	791-109
F3.G	1P45-H0400	RIGID GUIDE	VT-3	NS**	791-109
F3.G	1P45-H0401	RIGID GUIDE	VT-3	NS**	791-107
F3.G	1P45-H0402	RIGID GUIDE	VT-3	NS**	791-107
F3.ST	1P45-H0403	RIGID STRUT	VT-3	NS	791-105
F3.Gs	1P45-H0404	RIGID GUIDE	VT-3	NS	791-101
F3.ST	1P45-H0405	RIGID STRUT	VT-3	3	791-101
F3.Gs	1P45-H0406	RIGID GUIDE	VT-3	NS	791-101
F3.ST	1P45-H0407	RIGID STRUT	VT-3	NS	791-101
F3.Gs	1P45-H0408	RIGID GUIDE	VT-3	3	791-101
F3.ST	1P45-H0409	RIGID STRUT	VT-3	NS	791-101
F3.Gs	1P45-H0410	RIGID GUIDE	VT-3	NS	791-101
F3.ST	1P45-H0411	RIGID STRUT	VT-3	NS	791-101
F3.Gs	1P45-H0412	RIGID GUIDE	VT-3	NS	791-101
F3.ST	1P45-H0413	RIGID STRUT (WA)	VT-3	NS	791-101
F3.ST	1P45-H0414	RIGID STRUT	VT-3	NS	791-101
F3.ST	1P45-H0415	RIGID STRUT	VT-3	NS	791-101
F3.ST	1P45-H0416	RIGID STRUT	VT-3	NS	791-101
F3.G	1P45-H0417	RIGID GUIDE (WA)	VT-3	NS**	791-101
F3.STm	1P45-H0418	RIGID STRUT	VT-3	NS	791-102
F3.STm	1P45-H0419	RIGID STRUT	VT-3	NS	791-102
F3.G	1P45-H0420	RIGID GUIDE	VT-3	NS	791-102
F3.G	1P45-H0421	RIGID GUIDE	VT-3	NS	791-102
F3.SN	1P45-H0422	MECHANICAL SNUBBER (WA)	VT-3	NS	791-102
F3.G	1P45-H0423	RIGID GUIDE	VT-3	NS	791-102
F3.G	1P45-H0424	RIGID GUIDE	VT-3	NS	791-102
F3.G	1P45-H0425	RIGID GUIDE	VT-3	NS	791-102
F3.G	1P45-H0426	RIGID GUIDE	VT-3	NS	791-102
F3.ST	1P45-H0427	RIGID STRUT	VT-3	NS	791-102
F3.G	1P45-H0428	RIGID GUIDE (WA)	VT-3	NS	791-102
F3.G	1P45-H0430	RIGID GUIDE	VT-3	NS**	791-102

ITEM NO.	MARK NO.	COMPONENT DESCRIPTION	EXAM METHOD	PERIOD SCHED.	ISI ISO SS-305-
		EXAMINATION CATEGORY: F-A			
F3.R	1P45-H0431	RIGID SUPPORT (WA)	VT-3	NS	791-102
F3.G	1P45-H0434	RIGID GUIDE	VT-3	NS	792-114
F3.G	1P45-H0435	RIGID GUIDE	VT-3	NS	792-111
F3.R	1P45-H0437	RIGID SUPPORT	VT-3	NS	792-111
F3.STm	1P45-H0438	RIGID STRUT	VT-3	NS	791-102
F3.STm	1P45-H0439	RIGID STRUT	VT-3	NS	791-102
F3.SN	1P45-H0440	MECHANICAL SNUBBER	VT-3	NS	791-102
F3.SN	1P45-H0441	MECHANICAL SNUBBER	VT-3	NS	791-102
F3.SN	1P45-H0444	MECHANICAL SNUBBER	VT-3	NS	791-102
F3.SN	1P45-H0445	MECHANICAL SNUBBER	VT-3	NS	791-102
F3.G	1P45-H0446	RIGID GUIDE	VT-3	NS	792-114
F3.G	1P45-H0447	RIGID GUIDE	VT-3	NS	792-111
F3.ST	1P45-H0448	RIGID STRUT	VT-3	1	792-114
F3.ST	1P45-H0449	RIGID STRUT	VT-3	NS	792-111
F3.ST	1P45-H0501	RIGID STRUT	VT-3	NS	792-114
F3.SN	1P45-H0502	MECHANICAL SNUBBER	VT-3	NS	792-111
F3.ST	1P45-H0503	RIGID STRUT	VT-3	NS	792-111
F3.R	1P45-H0504	RIGID SUPPORT	VT-3	NS	792-114
F3.G	1P45-H0505	RIGID GUIDE	VT-3	NS	792-111
F3.G	1P45-H0506	RIGID GUIDE	VT-3	2	792-114
F3.G	1P45-H0507	RIGID GUIDE	VT-3	NS	792-114
F3.G	1P45-H0508	RIGID GUIDE	VT-3	1	792-111
F3.SN	1P45-H0509	MECHANICAL SNUBBER (WA)	VT-3	NS	792-111
F3.SN	1P45-H0510	MECHANICAL SNUBBER (WA)	VT-3	2	792-114
F3.ST	1P45-H0511	RIGID STRUT (WA)	VT-3	NS	792-114
F3.SN	1P45-H0512	MECHANICAL SNUBBER (WA)	VT-3	NS	792-111
F3.G	1P45-H0513	RIGID GUIDE	VT-3	NS	792-114
F3.G	1P45-H0514	RIGID GUIDE	VT-3	NS	792-111
F3.ST	1P45-H0515	RIGID STRUT (WA)	VT-3	NS	792-114
F3.SN	1P45-H0516	MECHANICAL SNUBBER (WA)	VT-3	NS	792-111
F3.R	1P45-H0517	RIGID SUPPORT	VT-3	NS	792-101
F3.R	1P45-H0518	RIGID SUPPORT	VT-3	NS	792-109
F3.G	1P45-H0519	RIGID GUIDE	VT-3	NS	792-101
F3.G	1P45-H0520	RIGID GUIDE	VT-3	NS	792-109
F3.SN	1P45-H0521	MECHANICAL SNUBBER (WA)	VT-3	NS	792-101
F3.G	1P45-H0522	RIGID GUIDE	VT-3	2	792-109
F3.G	1P45-H0523	RIGID GUIDE	VT-3	NS	792-101
F3.ST	1P45-H0524	RIGID STRUT	VT-3	NS	792-109
F3.SN	1P45-H0525	MECHANICAL SNUBBER (TANDEM)	VT-3	NS	792-101
F3.SN	1P45-H0526	MECHANICAL SNUBBER (WA)	VT-3	NS	792-101

ITEM NO.	MARK NO.	COMPONENT DESCRIPTION	EXAM METHOD	PERIOD SCHED.	ISI ISO SS-305-
		EXAMINATION CATEGORY: F-A			
F3.ST	1P45-H0527	RIGID STRUT	VT-3	1	792-101
F3.ST	1P45-H0528	RIGID STRUT	VT-3	NS	792-101
F3.ST	1P45-H0529	RIGID STRUT	VT-3	NS	792-101
F3.G	1P45-H0530	RIGID GUIDE	VT-3	NS	792-111
F3.G	1P45-H0531	RIGID GUIDE	VT-3	NS	792-111
F3.G	1P45-H0532	RIGID GUIDE	VT-3	NS	792-111
F3.ST	1P45-H0547	RIGID STRUT	VT-3	NS	792-111
F3.Gs	1P45-H0548	RIGID GUIDE	VT-3	NS	792-111
F3.ST	1P45-H0549	RIGID STRUT	VT-3	NS	792-111
F3.Gs	1P45-H0550	RIGID GUIDE	VT-3	NS	792-111
F3.ST	1P45-H0551	RIGID STRUT	VT-3	NS	792-111
F3.Gs	1P45-H0552	RIGID GUIDE	VT-3	NS	792-111
F3.Gs	1P45-H0603	RIGID GUIDE	VT-3	NS	791-113
F3.Gs	1P45-H0604	RIGID GUIDE	VT-3	NS	791-113
F3.Gs	1P45-H0605	RIGID GUIDE	VT-3	3	791-113
F3.Gs	1P45-H0606	RIGID GUIDE	VT-3	NS	791-113
F3.Gs	1P45-H0607	RIGID GUIDE	VT-3	NS	791-113
F3.Gs	1P45-H0608	RIGID GUIDE	VT-3	NS	791-113
F2.SP	1P45-H0609	VARIABLE SPRING	VT-3	NS	792-113
F2.SN	1P45-H0610	MECHANICAL SNUBBER (TANDEM)	VT-3	NS	792-113
F2.SN	1P45-H0611	MECHANICAL SNUBBER (WA)	VT-3	1	792-113
F3.ST	1P45-H0612	RIGID STRUT	VT-3	NS	792-113
F3.ST	1P45-H0613	RIGID STRUT (TANDEM)	VT-3	NS	792-113
F3.ST	1P45-H0614	RIGID STRUT (TANDEM)	VT-3	NS	792-113
F3.G	1P45-H0615	RIGID GUIDE	VT-3	NS	792-113
F3.ST	1P45-H0616	RIGID STRUT	VT-3	NS	792-113
F3.SN	1P45-H0617	MECHANICAL SNUBBER (TANDEM)	VT-3	NS	792-113
F3.ST	1P45-H0618	RIGID STRUT	VT-3	NS	792-113
F3.ST	1P45-H0619	RIGID STRUT	VT-3	NS	792-114
F3.G	1P45-H0620	RIGID GUIDE	VT-3	NS	792-111
F3.G	1P45-H0621	RIGID GUIDE	VT-3	NS	792-101
F3.ST	1P45-H0622	RIGID STRUT	VT-3	3	792-109
F3.ST	1P45-H0623	RIGID STRUT	VT-3	NS	791-101
F3.A	1P45-H0625	ANCHOR (WA)	VT-3	NS	791-101
F3.SP	1P45-H0626	VARIABLE SPRING	VT-3	NS	791-108
F3.SP	1P45-H0627	VARIABLE SPRING	VT-3	NS	791-109
F3.G	1P45-H0643	RIGID GUIDE (WA)	VT-3	NS**	791-110
F3.STm	1P45-H0644	RIGID STRUT	VT-3	NS	791-110
F3.STm	1P45-H0645	RIGID STRUT	VT-3	NS	791-110

ITEM NO.	MARK NO.	COMPONENT DESCRIPTION	EXAM METHOD	PERIOD SCHED.	ISI ISO SS-305-
		EXAMINATION CATEGORY: F-A			
F3.R	1P45-H0646	RIGID SUPPORT	VT-3	NS	791-110
F3.STm	1P45-H0647	RIGID STRUT	VT-3	NS	791-110
F3.G	1P45-H0648	RIGID GUIDE (WA)	VT-3	NS	791-110
F3.G	1P45-H0649	RIGID GUIDE (WA)	VT-3	NS**	791-110
F3.ST	1P45-H0650	RIGID STRUT	VT-3	2	791-113
F3.ST	1P45-H0651	RIGID STRUT	VT-3	NS	791-113
F3.G	1P45-H0652	RIGID GUIDE	VT-3	NS	791-110
F3.G	1P45-H0653	RIGID GUIDE	VT-3	NS	791-110
F3.G	1P45-H0654	RIGID GUIDE (WA)	VT-3	NS	791-110
F3.Gs	1P45-H0655	RIGID GUIDE	VT-3	1	791-110
F3.G	1P45-H0656	RIGID GUIDE (WA)	VT-3	NS	791-110
F3.Gs	1P45-H0657	RIGID GUIDE	VT-3	NS	791-110
F3.STm	1P45-H0658	RIGID STRUT	VT-3	NS	791-110
F3.G	1P45-H0659	RIGID GUIDE (WA)	VT-3	NS**	791-110
F3.STm	1P45-H0680	RIGID STRUT	VT-3	NS	792-115
F3.STm	1P45-H0681	RIGID STRUT	VT-3	NS	792-115
F3.ST	1P45-H0682	RIGID STRUT	VT-3	NS	792-113
F3.R	1P45-H0683	RIGID ROD	VT-3	3	792-105
F3.SN	1P45-H0684	MECHANICAL SNUBBER	VT-3	NS	792-109
F3.R	1P45-H0685	RIGID SUPPORT	VT-3	NS	792-106
F3.ST	1P45-H0686	RIGID STRUT	VT-3	NS	791-111
F3.ST	1P45-H0687	RIGID STRUT	VT-3	NS	792-113
F3.ST	1P45-H0689	RIGID STRUT	VT-3	NS	791-101
F3.ST	1P45-H0692	RIGID STRUT	VT-3	NS	791-102
F3.G	1P45-H5000	RIGID GUIDE (WA)	VT-3	NS	791-105
F3.G	1P45-H5001	RIGID GUIDE	VT-3	2	791-105
F3.ST	1P45-H5002	RIGID STRUT (WA) (TANDEM)	VT-3	NS	791-106
F3.ST	1P45-H5003	RIGID STRUT (WA) (TANDEM)	VT-3	3	791-112
F3.G	1P45-H5004	RIGID GUIDE	VT-3	NS	791-106
F3.G	1P45-H5005	RIGID GUIDE	VT-3	NS	791-112
F3.ST	1P45-H5007	RIGID STRUT	VT-3	NS	791-112
F3.ST	1P45-H5008	RIGID STRUT	VT-3	NS	791-106
F1.40	1P47-A002A-SP	ANCHOR, EXPANSION TANK (WA)	VT-3	2	002-115
F1.40	1P47-A002B-SP	ANCHOR, EXPANSION TANK (WA)	VT-3	NS	002-115
F1.40	1P47-B001A-SP	ANCHOR, CHILLER (WA)	VT-3	1	002-116
F1.40	1P47-B001B-SP	ANCHOR, CHILLER (WA)	VT-3	NS	002-116
F1.40	1P47-B001C-SP	ANCHOR, CHILLER (WA)	VT-3	NS	002-116

ITEM NO.	MARK NO.	COMPONENT DESCRIPTION	EXAM METHOD	PERIOD SCHED.	ISI ISO SS-305-
		EXAMINATION CATEGORY: F-A			
F1.40	1P47-C001A-SP	ANCHOR, PUMP (WA)	VT-3	2	002-117
F1.40	1P47-C001B-SP	ANCHOR, PUMP (WA)	VT-3	NS	002-117
F1.40	1P47-C001C-SP	ANCHOR, PUMP (WA)	VT-3	NS	002-117
F3.R	1P47-H0001	RIGID SUPPORT (WA)	VT-3	NS	002-101
F3.G	1P47-H0002	RIGID GUIDE (WA)	VT-3	1	002-101
F3.R	1P47-H0003	RIGID ROD	VT-3	NS	002-101
F3.ST	1P47-H0006	RIGID STRUT	VT-3	NS	002-101
F3.ST	1P47-H0007	RIGID STRUT	VT-3	NS	002-101
F3.ST	1P47-H0008	RIGID STRUT	VT-3	NS	002-101
F3.ST	1P47-H0009	RIGID STRUT	VT-3	NS	002-101
F3.ST	1P47-H0010	RIGID STRUT	VT-3	NS	002-101
F3.ST	1P47-H0011	RIGID STRUT	VT-3	2	002-101
F3.R	1P47-H0012	RIGID ROD	VT-3	NS	002-102
F3.ST	1P47-H0013	RIGID STRUT	VT-3	NS	002-102
F3.G	1P47-H0014	RIGID GUIDE (WA)	VT-3	NS	002-101
F3.G	1P47-H0015	RIGID GUIDE (WA)	VT-3	NS	002-101
F3.R	1P47-H0016	RIGID SUPPORT (WA)	VT-3	NS	002-102
F3.ST	1P47-H0018	RIGID STRUT	VT-3	NS	002-102
F3.ST	1P47-H0019	RIGID STRUT (WA)	VT-3	NS	002-102
F3.ST	1P47-H0020	RIGID STRUT	VT-3	NS	002-101
F3.R	1P47-H0021	RIGID SUPPORT (WA)	VT-3	NS	002-107
F3.STm	1P47-H0022	RIGID STRUT	VT-3	NS	002-107
F3.STm	1P47-H0023	RIGID STRUT	VT-3	NS	002-107
F3.G	1P47-H0024	RIGID GUIDE	VT-3	2	002-107
F3.STm	1P47-H0027	RIGID STRUT	VT-3	3	002-107
F3.STm	1P47-H0028	RIGID STRUT	VT-3	NS	002-107
F3.R	1P47-H0029	RIGID SUPPORT (WA)	VT-3	NS	002-108
F3.R	1P47-H0030	RIGID SUPPORT (WA)	VT-3	NS	002-109
F3.R	1P47-H0031	RIGID SUPPORT (WA)	VT-3	3	002-103
F3.ST	1P47-H0032	RIGID STRUT	VT-3	NS	002-103
F3.ST	1P47-H0033	RIGID STRUT	VT-3	NS	002-103
F3.ST	1P47-H0034	RIGID STRUT (WA)	VT-3	NS	002-103
F3.ST	1P47-H0035	RIGID STRUT	VT-3	NS	002-103
F3.ST	1P47-H0036	RIGID STRUT	VT-3	1	002-103
F3.R	1P47-H0037	RIGID ROD	VT-3	2	002-103
F3.G	1P47-H0038	RIGID GUIDE	VT-3	NS	002-103
F3.G	1P47-H0039	RIGID GUIDE	VT-3	NS	002-107
F3.ST	1P47-H0041	RIGID STRUT	VT-3	NS	002-103
F3.ST	1P47-H0042	RIGID STRUT	VT-3	NS	002-103

ITEM NO.	MARK NO.	COMPONENT DESCRIPTION	EXAM METHOD	PERIOD SCHED.	ISI ISO SS-305-
		EXAMINATION CATEGORY: F-A			
F3.ST	1P47-H0043	RIGID STRUT (WA)	VT-3	NS	002-103
F3.STm	1P47-H0044	RIGID STRUT	VT-3	NS	002-107
F3.STm	1P47-H0045	RIGID STRUT	VT-3	NS	002-107
F3.STm	1P47-H0046	RIGID STRUT (WA)	VT-3	NS	002-107
F3.STm	1P47-H0048	RIGID STRUT	VT-3	NS	002-107
F3.STm	1P47-H0049	RIGID STRUT	VT-3	NS	002-107
F3.STm	1P47-H0050	RIGID STRUT	VT-3	NS	002-107
F3.STm	1P47-H0051	RIGID STRUT	VT-3	NS	002-107
F3.ST	1P47-H0052	RIGID STRUT	VT-3	NS	002-101
F3.ST	1P47-H0053	RIGID STRUT	VT-3	3	002-102
F3.ST	1P47-H0054	RIGID STRUT	VT-3	NS	002-103
F3.G	1P47-H0055	RIGID GUIDE	VT-3	NS	002-107
F3.G	1P47-H0056	RIGID GUIDE	VT-3	NS	002-108
F3.G	1P47-H0057	RIGID GUIDE	VT-3	NS	002-109
F3.ST	1P47-H0170	RIGID STRUT	VT-3	NS	002-105
F3.ST	1P47-H0171	RIGID STRUT	VT-3	NS	002-105
F3.ST	1P47-H0172	RIGID STRUT	VT-3	NS	002-110
F3.ST	1P47-H0173	RIGID STRUT	VT-3	NS	002-110
F3.ST	1P47-H0174	RIGID STRUT	VT-3	NS	002-110
F3.ST	1P47-H0175	RIGID STRUT	VT-3	NS	002-110
F3.ST	1P47-H0176	RIGID STRUT	VT-3	NS	002-105
F3.ST	1P47-H0177	RIGID STRUT	VT-3	NS	002-105
F3.ST	1P47-H0178	RIGID STRUT	VT-3	NS	002-111
F3.ST	1P47-H0179	RIGID STRUT	VT-3	2	002-111
F3.ST	1P47-H0180	RIGID STRUT	VT-3	NS	002-106
F3.ST	1P47-H0181	RIGID STRUT	VT-3	NS	002-106
F3.ST	1P47-H0182	RIGID STRUT	VT-3	NS	002-111
F3.ST	1P47-H0183	RIGID STRUT	VT-3	NS	002-111
F3.ST	1P47-H0184	RIGID STRUT	VT-3	1	002-106
F3.ST	1P47-H0185	RIGID STRUT	VT-3	NS	002-106
F3.ST	1P47-H0186	RIGID STRUT	VT-3	NS	002-111
F3.ST	1P47-H0187	RIGID STRUT	VT-3	NS	002-111
F3.ST	1P47-H0188	RIGID STRUT	VT-3	NS	002-106
F3.ST	1P47-H0189	RIGID STRUT	VT-3	NS	002-106
F3.ST	1P47-H0190	RIGID STRUT	VT-3	1	002-113
F3.ST	1P47-H0191	RIGID STRUT	VT-3	NS	002-113
F3.ST	1P47-H0192	RIGID STRUT	VT-3	NS	002-103
F3.ST	1P47-H0193	RIGID STRUT	VT-3	NS	002-103
F3.ST	1P47-H0194	RIGID STRUT	VT-3	NS	002-113
F3.ST	1P47-H0195	RIGID STRUT	VT-3	NS	002-113

ITEM NO.	MARK NO.	COMPONENT DESCRIPTION	EXAM METHOD	PERIOD SCHED.	ISI ISO SS-305-
		EXAMINATION CATEGORY: F-A			
F3.ST	1P47-H0196	RIGID STRUT	VT-3	NS	002-113
F3.ST	1P47-H0197	RIGID STRUT	VT-3	NS	002-113
F3.ST	1P47-H0198	RIGID STRUT	VT-3	NS	002-103
F3.ST	1P47-H0199	RIGID STRUT	VT-3	NS	002-103
F3.ST	1P47-H0200	RIGID STRUT	VT-3	NS	002-113
F3.ST	1P47-H0201	RIGID STRUT	VT-3	NS	002-113
F3.ST	1P47-H0202	RIGID STRUT	VT-3	NS	002-104
F3.ST	1P47-H0203	RIGID STRUT	VT-3	NS	002-104
F3.ST	1P47-H0204	RIGID STRUT	VT-3	NS	002-113
F3.ST	1P47-H0205	RIGID STRUT	VT-3	NS	002-113
F3.ST	1P47-H0206	RIGID STRUT	VT-3	NS	002-104
F3.ST	1P47-H0207	RIGID STRUT	VT-3	NS	002-104
F3.ST	1P47-H0208	RIGID STRUT	VT-3	NS	002-111
F3.ST	1P47-H0209	RIGID STRUT	VT-3	NS	002-111
F3.ST	1P47-H0210	RIGID STRUT	VT-3	NS	002-113
F3.ST	1P47-H0211	RIGID STRUT	VT-3	NS	002-113
F3.ST	1P47-H0212	RIGID STRUT	VT-3	NS	002-104
F3.ST	1P47-H0213	RIGID STRUT	VT-3	NS	002-104
F3.A	1P47-H0215	ANCHOR (WA)	VT-3	NS	002-110
F3.A	1P47-H0218	ANCHOR (WA)	VT-3	NS	002-103
F3.A	1P47-H0219	ANCHOR (WA)	VT-3	1	002-113
F3.A	1P47-H0220	ANCHOR (WA)	VT-3	NS	002-107
F3.A	1P47-H0221	ANCHOR (WA)	VT-3	NS	002-105
F3.A	1P47-H0222	ANCHOR (WA)	VT-3	NS	002-102
F3.G	1P47-H0224	RIGID GUIDE	VT-3	NS	002-113
F3.G	1P47-H0226	RIGID GUIDE	VT-3	NS	002-113
F3.G	1P47-H0228	RIGID GUIDE	VT-3	NS	002-113
F3.G	1P47-H0230	RIGID GUIDE	VT-3	NS	002-113
F3.G	1P47-H0232	RIGID GUIDE	VT-3	NS	002-113
F3.G	1P47-H0233	RIGID GUIDE	VT-3	NS	002-113
F3.G	1P47-H0234	RIGID GUIDE	VT-3	NS	002-104
F3.G	1P47-H0236	RIGID GUIDE	VT-3	NS	002-104
F3.G	1P47-H0238	RIGID GUIDE	VT-3	NS	002-104
F3.G	1P47-H0240	RIGID GUIDE	VT-3	NS	002-104
F3.G	1P47-H0242	RIGID GUIDE	VT-3	NS	002-104
F3.G	1P47-H0251	RIGID GUIDE	VT-3	NS	002-105
F3.STm	1P47-H0252	RIGID STRUT	VT-3	NS	002-105
F3.G	1P47-H0253	RIGID GUIDE	VT-3	NS	002-105
F3.G	1P47-H0254	RIGID GUIDE	VT-3	NS	002-105
F3.G	1P47-H0255	RIGID GUIDE	VT-3	NS	002-105

ITEM NO.	MARK NO.	COMPONENT DESCRIPTION	EXAM METHOD	PERIOD SCHED.	ISI ISO SS-305-
		EXAMINATION CATEGORY: F-A			
F3.G	1P47-H0256	RIGID GUIDE	VT-3	NS	002-110
F3.STm	1P47-H0257	RIGID STRUT	VT-3	2	002-110
F3.G	1P47-H0258	RIGID GUIDE	VT-3	NS	002-110
F3.G	1P47-H0259	RIGID GUIDE	VT-3	2	002-110
F3.G	1P47-H0260	RIGID GUIDE	VT-3	NS	002-110
F3.G	1P47-H0261	RIGID GUIDE	VT-3	NS	002-113
F3.G	1P47-H0262	RIGID GUIDE	VT-3	NS	002-113
F3.G	1P47-H0263	RIGID GUIDE	VT-3	NS	002-113
F3.G	1P47-H0264	RIGID GUIDE	VT-3	NS	002-113
F3.G	1P47-H0265	RIGID GUIDE	VT-3	1	002-113
F3.G	1P47-H0266	RIGID GUIDE	VT-3	NS	002-103
F3.G	1P47-H0267	RIGID GUIDE	VT-3	NS	002-103
F3.G	1P47-H0268	RIGID GUIDE	VT-3	NS	002-103
F3.G	1P47-H0269	RIGID GUIDE	VT-3	NS	002-103
F3.G	1P47-H0270	RIGID GUIDE	VT-3	NS	002-103
F3.G	1P47-H0272	RIGID GUIDE	VT-3	NS	002-113
F3.G	1P47-H0273	RIGID GUIDE	VT-3	NS	002-103
F3.G	1P47-H0274	RIGID GUIDE	VT-3	NS	002-103
F3.G	1P47-H0275	RIGID GUIDE	VT-3	NS	002-113
F3.G	1P47-H0276	RIGID GUIDE	VT-3	NS	002-103
F3.G	1P47-H0277	RIGID GUIDE	VT-3	NS	002-113
F3.SN	1P47-H0278	MECHANICAL SNUBBER (WA)	VT-3	NS	002-103
F3.SN	1P47-H0279	MECHANICAL SNUBBER (WA)	VT-3	2	002-113
F3.G	1P47-H0280	RIGID GUIDE	VT-3	3	002-105
F3.G	1P47-H0281	RIGID GUIDE	VT-3	NS	002-110
F3.G	1P47-H0282	RIGID GUIDE	VT-3	NS	002-110
F3.G	1P47-H0283	RIGID GUIDE	VT-3	NS	002-105
F3.G	1P47-H0284	RIGID GUIDE	VT-3	NS	002-105
F3.G	1P47-H0285	RIGID GUIDE	VT-3	NS	002-110
F3.ST	1P47-H0286	RIGID STRUT (WA)	VT-3	NS	002-105
F3.ST	1P47-H0287	RIGID STRUT (WA)	VT-3	NS	002-110
F3.ST	1P47-H0289	RIGID STRUT	VT-3	NS	002-106
F3.G	1P47-H0290	RIGID GUIDE	VT-3	NS	002-111
F3.ST	1P47-H0291	RIGID STRUT	VT-3	3	002-111
F3.ST	1P47-H0292	RIGID STRUT	VT-3	NS	002-111
F3.G	1P47-H0293	RIGID GUIDE	VT-3	2	002-111
F3.G	1P47-H0294	RIGID GUIDE	VT-3	NS	002-111
F3.ST	1P47-H0295	RIGID STRUT	VT-3	NS	002-112
F3.ST	1P47-H0296	RIGID STRUT	VT-3	NS	002-112
F3.G	1P47-H0297	RIGID GUIDE	VT-3	NS	002-112

ITEM NO.	MARK NO.	COMPONENT DESCRIPTION	EXAM METHOD	PERIOD SCHED.	ISI ISO SS-305-
		EXAMINATION CATEGORY: F-A			
F3.G	1P47-H0298	RIGID GUIDE	VT-3	NS	002-106
F3.G	1P47-H0299	RIGID GUIDE	VT-3	NS	002-106
F3.ST	1P47-H0301	RIGID STRUT	VT-3	NS	002-104
F3.G	1P47-H0302	RIGID GUIDE	VT-3	NS	002-113
F3.ST	1P47-H0303	RIGID STRUT	VT-3	NS	002-113
F3.G	1P47-H0304	RIGID GUIDE	VT-3	NS	002-113
F3.G	1P47-H0322	RIGID GUIDE	VT-3	1	002-102
F3.STm	1P47-H0329	RIGID STRUT	VT-3	NS	002-114
F3.STm	1P47-H0331	RIGID STRUT	VT-3	NS	002-114
F3.STm	1P47-H0333	RIGID STRUT	VT-3	NS	002-113
F3.STm	1P47-H0335	RIGID STRUT	VT-3	NS	002-113
F3.G	1P47-H0337	RIGID GUIDE	VT-3	NS	002-114
F3.G	1P47-H0338	RIGID GUIDE	VT-3	NS	002-114
F3.STm	1P47-H0340	RIGID STRUT	VT-3	NS	002-114
F3.ST	1P47-H0341	RIGID STRUT	VT-3	NS	002-114
F3.ST	1P47-H0342	RIGID STRUT	VT-3	NS	002-104
F3.STm	1P47-H0343	RIGID STRUT	VT-3	NS	002-103
F3.STm	1P47-H0346	RIGID STRUT	VT-3	NS	002-104
F3.STm	1P47-H0347	RIGID STRUT	VT-3	NS	002-113
F3.ST	1P47-H0348	RIGID STRUT (WA) (TANDEM)	VT-3	NS	002-104
F3.ST	1P47-H0349	RIGID STRUT (WA) (TANDEM)	VT-3	NS	002-113
F3.G	1P47-H0350	RIGID GUIDE	VT-3	NS	002-104
F3.ST	1P47-H0351	RIGID STRUT	VT-3	NS	002-104
F3.STm	1P47-H0353	RIGID STRUT	VT-3	NS	002-114
F3.G	1P47-H0354	RIGID GUIDE	VT-3	NS	002-112
F3.G	1P47-H0355	RIGID GUIDE	VT-3	NS	002-112
F3.ST	1P47-H0357	RIGID STRUT (WA) (TANDEM)	VT-3	1	002-105
F3.ST	1P47-H0358	RIGID STRUT (WA) (TANDEM)	VT-3	NS	002-111
F3.ST	1P47-H0362	RIGID STRUT	VT-3	NS	002-105
F3.ST	1P47-H0363	RIGID STRUT	VT-3	2	002-112
F3.ST	1P47-H0364	RIGID STRUT	VT-3	NS	002-112
F3.ST	1P47-H0365	RIGID STRUT	VT-3	NS	002-112
F3.ST	1P47-H0369	RIGID STRUT	VT-3	NS	002-114
F3.SP	1P47-H0378	VARIABLE SPRING (WA)	VT-3	1	002-109
F3.SP	1P47-H0379	VARIABLE SPRING (WA)	VT-3	NS	002-109
F3.SP	1P47-H0380	VARIABLE SPRING (WA)	VT-3	NS	002-108
F3.SP	1P47-H0381	VARIABLE SPRING (WA)	VT-3	NS	002-108
F3.SP	1P47-H0382	VARIABLE SPRING (WA)	VT-3	NS	002-107
F3.SP	1P47-H0383	VARIABLE SPRING	VT-3	NS	002-107

ITEM NO.	MARK NO.	COMPONENT DESCRIPTION	EXAM METHOD	PERIOD SCHED.	ISI ISO SS-305-
		EXAMINATION CATEGORY: F-A			
F3.STm	1P47-H0384	RIGID STRUT	VT-3	NS	002-104
F3.STm	1P47-H0385	RIGID STRUT	VT-3	3	002-113
F3.STm	1P47-H0386	RIGID STRUT	VT-3	NS	002-103
F3.STm	1P47-H0392	RIGID STRUT	VT-3	NS	002-105
F3.STm	1P47-H0393	RIGID STRUT	VT-3	NS	002-110
F3.ST	1P47-H5000	RIGID STRUT	VT-3	NS	002-110
F3.G	1P47-H5001	RIGID GUIDE	VT-3	NS	002-105
F1.40	0P49-C002A-SP	ANCHOR, SCREEN WASH PUMP (WA)	VT-3	3	214-101
F1.40	0P49-C002B-SP	ANCHOR, SCREEN WASH PUMP (WA)	VT-3	NS	214-102
F1.40	0P49-D003A-SP	ANCHOR, SCREEN WASH STRAINER (WA)	VT-3	2	214-101
F1.40	0P49-D003B-SP	ANCHOR, SCREEN WASH STRAINER (WA)	VT-3	NS	214-102
F1.40	1P57-A003A-SP	ANCHOR, ADS SAFETY-RELATED AIR STORAGE TANK A (WA)	VT-3	1	271-101
F1.40	1P57-A003B-SP	ANCHOR, ADS SAFETY-RELATED AIR STORAGE TANK B (WA)	VT-3	NS	271-101
F1.40	1R44-A001A-SP	ANCHOR, STARTING AIR RECEIVER TANK (WA)	VT-3	3	351-102
F1.40	1R44-A001B-SP	ANCHOR, STARTING AIR RECEIVER TANK (WA)	VT-3	NS	351-104
F1.40	1R44-A002A-SP	ANCHOR, STARTING AIR RECEIVER TANK (WA)	VT-3	2	351-103
F1.40	1R44-A002B-SP	ANCHOR, STARTING AIR RECEIVER TANK (WA)	VT-3	NS	351-105
F1.40	1R45-A003A-SP	ANCHOR, FUEL OIL DAY TANK (WA)	VT-3	3	355-110
F1.40	1R45-A003B-SP	ANCHOR, FUEL OIL DAY TANK (WA)	VT-3	NS	355-111
F1.40	1R45-A005-SP	ANCHOR, HPCS FUEL OIL DAY TANK (WA)	VT-3	2	356-101
F1.40	1R46-A003A-SP	ANCHOR, JACKET WATER STAND PIPE (WA)	VT-3	3	354-105
F1.40	1R46-A003B-SP	ANCHOR, JACKET WATER STAND PIPE (WA)	VT-3	NS	354-106
F1.40	1R46-B001A-SP	ANCHOR, LUBE OIL HEAT EXCHANGER (WA)	VT-3	2	354-101
F1.40	1R46-B001B-SP	ANCHOR, LUBE OIL HEAT EXCHANGER (WA)	VT-3	NS	354-102
F1.40	1R46-B002A-SP	ANCHOR, JACKET WATER HEAT EXCHANGER(WA)	VT-3	1	354-103
F1.40	1R46-B002B-SP	ANCHOR, JACKET WATER HEAT EXCHANGER (WA)	VT-3	NS	354-104
F1.40	1R47-A001A-SP	STANDBY DIESEL LUBE OIL TANK ANCHOR (WA)	VT-3	3	353-103
F1.40	1R47-A001B-SP	STANDBY DIESEL LUBE OIL TANK ANCHOR (WA)	VT-3	NS	353-104
F1.40	1R47-D005A-SP	STANDBY DIESEL LUBE OIL FILTER ANCHOR (WA)	VT-3	2	353-105
F1.40	1R47-D005B-SP	STANDBY DIESEL LUBE OIL FILTER ANCHOR (WA)	VT-3	NS	353-106
F1.40	1R47-D006A-SP	STANDBY DIESEL LUBE OIL KEEP WARM FILTER ANCHOR (WA)	VT-3	1	353-101
F1.40	1R47-D006B-SP	STANDBY DIESEL LUBE OIL KEEP WARM FILTER ANCHOR (WA)	VT-3	NS	353-102

ITEM NO.	MARK NO.	COMPONENT DESCRIPTION	EXAM METHOD	PERIOD SCHED.	ISI ISO SS-305-
		EXAMINATION CATEGORY: F-A			
F3.A	1R48-D001A-SP	ANCHOR; STANDBY DIESEL SILENCER (WA)	VT-3	NS	355-105
F3.A	1R48-D001B-SP	ANCHOR; STANDBY DIESEL SILENCER (WA)	VT-3	3	355-104
F3.A	1R48-D002A-SP	ANCHOR; STANDBY DIESEL SILENCER (WA)	VT-3	NS	355-103
F3.A	1R48-D002B-SP	ANCHOR; STANDBY DIESEL SILENCER (WA)	VT-3	3	355-102
F3.A	1R48-D003A-SP	ANCHOR; STANDBY DIESEL SILENCER (WA)	VT-3	NS	355-103
F3.A	1R48-D003B-SP	ANCHOR; STANDBY DIESEL SILENCER (WA)	VT-3	3	355-102
F3.A	1R48-D010A-SP	ANCHOR; STANDBY DIESEL SILENCER	VT-3	NS	355-107
F3.A	1R48-D010B-SP	ANCHOR; STANDBY DIESEL SILENCER	VT-3	3	355-106
F3.G	1R48-H0001	RIGID GUIDE	VT-3	NS	355-103
F3.G	1R48-H0002	RIGID GUIDE	VT-3	1	355-103
F3.G	1R48-H0003	RIGID GUIDE	VT-3	NS	355-103
F3.ST	1R48-H0004	RIGID STRUT (TANDEM)	VT-3	NS	355-103
F3.A	1R48-H0005	ANCHOR (WA)	VT-3	NS	355-103
F3.A	1R48-H0006	ANCHOR (WA)	VT-3	NS	355-103
F3.G	1R48-H0007	RIGID GUIDE	VT-3	NS	355-103
F3.ST	1R48-H0008	RIGID STRUT (TANDEM)	VT-3	NS	355-103
F3.G	1R48-H0009	RIGID GUIDE	VT-3	NS	355-103
F3.G	1R48-H0010	RIGID GUIDE	VT-3	NS	355-103
F3.A	1R48-H0011	ANCHOR (WA)	VT-3	NS	355-103
F3.A	1R48-H0012	ANCHOR (WA)	VT-3	NS	355-103
F3.A	1R48-H0013	ANCHOR (WA)	VT-3	NS	355-102
F3.G	1R48-H0014	RIGID GUIDE	VT-3	NS	355-102
F3.G	1R48-H0015	RIGID GUIDE	VT-3	NS	355-102
F3.G	1R48-H0016	RIGID GUIDE	VT-3	NS	355-102
F3.ST	1R48-H0017	RIGID STRUT (TANDEM)	VT-3	NS	355-102
F3.A	1R48-H0018	ANCHOR (WA)	VT-3	NS	355-102
F3.A	1R48-H0019	ANCHOR (WA)	VT-3	NS	355-102
F3.G	1R48-H0020	RIGID GUIDE	VT-3	NS	355-102
F3.G	1R48-H0021	RIGID GUIDE	VT-3	NS	355-102
F3.G	1R48-H0022	RIGID GUIDE	VT-3	3	355-102
F3.ST	1R48-H0023	RIGID STRUT (TANDEM)	VT-3	NS	355-102
F3.A	1R48-H0024	ANCHOR (WA)	VT-3	NS	355-102
F3.SP	1R48-H0025	VARIABLE SPRING (TANDEM)	VT-3	NS	355-105
F3.SP	1R48-H0026	VARIABLE SPRING (TANDEM)	VT-3	NS	355-105
F3.SN	1R48-H0027	MECHANICAL SNUBBER (WA) (TANDEM)	VT-3	3	355-105
F3.SN	1R48-H0028	MECHANICAL SNUBBER (TANDEM)	VT-3	NS	355-105
F3.G	1R48-H0029	RIGID GUIDE	VT-3	NS	355-105
F3.G	1R48-H0030	RIGID GUIDE	VT-3	NS	355-105
F3.A	1R48-H0031	ANCHOR (NOT WELDED)	VT-3	1	355-105

ITEM NO.	MARK NO.	COMPONENT DESCRIPTION	EXAM METHOD	PERIOD SCHED.	ISI ISO SS-305-
		EXAMINATION CATEGORY: F-A			
F3.SP	1R48-H0032	VARIABLE SPRING (TANDEM)	VT-3	NS	355-104
F3.SP	1R48-H0033	VARIABLE SPRING (TANDEM)	VT-3	3	355-104
F3.SN	1R48-H0034	MECHANICAL SNUBBER (WA) (TANDEM)	VT-3	NS	355-104
F3.SN	1R48-H0035	MECHANICAL SNUBBER (TANDEM)	VT-3	NS	355-104
F3.R	1R48-H0036	RIGID SUPPORT	VT-3	NS	355-104
F3.G	1R48-H0037	RIGID GUIDE	VT-3	NS	355-104
F3.A	1R48-H0038	ANCHOR (NOT WELDED)	VT-3	NS	355-104
F3.A	1R48-H0039	ANCHOR (NOT WELDED)	VT-3	NS	355-105
F3.A	1R48-H0040	ANCHOR (NOT WELDED)	VT-3	NS	355-104
F3.SP	1R48-H0041	VARIABLE SPRING (WA)	VT-3	NS	355-105
F3.SP	1R48-H0042	VARIABLE SPRING (WA)	VT-3	NS	355-104
F3.Gs	1R48-H0043	RIGID GUIDE	VT-3	NS	355-106
F3.Gs	1R48-H0044	RIGID GUIDE	VT-3	NS	355-106
F3.ST	1R48-H0045	RIGID STRUT (WA)	VT-3	NS	355-106
F3.ST	1R48-H0046	RIGID STRUT	VT-3	NS	355-106
F3.R	1R48-H0047	RIGID SUPPORT (WA)	VT-3	2	355-106
F3.Gs	1R48-H0048	RIGID GUIDE	VT-3	NS	355-107
F3.Gs	1R48-H0049	RIGID GUIDE	VT-3	NS	355-107
F3.ST	1R48-H0050	RIGID STRUT (WA)	VT-3	2	355-107
F3.ST	1R48-H0051	RIGID STRUT	VT-3	NS	355-107
F3.R	1R48-H0052	RIGID SUPPORT (WA)	VT-3	NS	355-107
F3.R	1R48-PH001	RIGID ROD	VT-3	NS	355-108
F3.R	1R48-PH002	RIGID ROD	VT-3	NS	355-109
F3.R	1R48-PH003	RIGID SUPPORT	VT-3	NS	355-108
F3.R	1R48-PH004	RIGID SUPPORT	VT-3	NS	355-109
F3.R	1R48-PH005	RIGID ROD	VT-3	3	355-108
F3.R	1R48-PH006	RIGID ROD	VT-3	NS	355-109
F3.R	1R48-PH007	RIGID ROD	VT-3	NS	355-108
F3.R	1R48-PH008	RIGID ROD	VT-3	NS	355-109
F3.R	1R48-PH009	RIGID ROD	VT-3	NS	355-108
F3.R	1R48-PH010	RIGID ROD	VT-3	NS	355-109
F3.G	1R48-PH011	RIGID GUIDE	VT-3	NS	355-109
F3.G	1R48-PH012	RIGID GUIDE	VT-3	NS	355-108
F3.SP	2G41-H0032	VARIABLE SPRING	VT-3	NS	655-103
F3.SN	2G41-H0033	MECHANICAL SNUBBER	VT-3	NS	655-103
F3.SN	2G41-H0034	MECHANICAL SNUBBER	VT-3	2	655-103
F3.ST	2G41-H0035	RIGID STRUT	VT-3	NS	655-103
F3.SN	2G41-H0036	MECHANICAL SNUBBER	VT-3	NS	655-103
F3.G	2G41-H0037	RIGID GUIDE	VT-3	NS	655-103

ITEM NO.	MARK NO.	COMPONENT DESCRIPTION	EXAM METHOD	PERIOD SCHED.	ISI ISO SS-305-
		EXAMINATION CATEGORY: F-A			
F3.SN	2G41-H0038	MECHANICAL SNUBBER	VT-3	1	655-103
F3.G	2P42-H0009	RIGID GUIDE (WA)	VT-3	NS	623-106
F3.G	2P42-H0010	RIGID GUIDE (WA)	VT-3	NS	623-107
F3.ST	2P42-H0011	RIGID STRUT	VT-3	NS	623-107
F3.G	2P42-H0012	RIGID GUIDE	VT-3	NS	623-106
F3.Gs	2P42-H0013	RIGID GUIDE	VT-3	1	623-107
F3.R	2P42-H0014	RIGID ROD	VT-3	NS	623-107
F3.R	2P42-H0015	RIGID ROD	VT-3	NS	623-107
F3.ST	2P42-H0016	RIGID STRUT	VT-3	NS	623-106
F3.ST	2P42-H0017	RIGID STRUT	VT-3	NS	623-106
F3.ST	2P42-H0018	RIGID STRUT (WA)	VT-3	NS	623-106
F3.ST	2P42-H0019	RIGID STRUT	VT-3	NS	623-107
F3.ST	2P42-H0020	RIGID STRUT (WA)	VT-3	NS	623-107
F3.R	2P42-H0021	RIGID ROD	VT-3	NS	623-107
F3.G	2P42-H0024	RIGID GUIDE (WA)	VT-3	NS	623-112
F3.G	2P42-H0025	RIGID GUIDE (WA)	VT-3	NS	623-110
F3.ST	2P42-H0026	RIGID STRUT (WA)	VT-3	3	623-110
F3.ST	2P42-H0030	RIGID STRUT	VT-3	NS	623-110
F3.G	2P42-H0034	RIGID GUIDE	VT-3	NS	623-110
F3.R	2P42-H0035	RIGID ROD	VT-3	NS	623-110
F3.R	2P42-H0036	RIGID ROD	VT-3	1	623-110
F3.G	2P42-H0037	RIGID GUIDE	VT-3	NS	623-111
F3.A	2P42-H0039	ANCHOR (WA)	VT-3	NS	623-101
F3.ST	2P42-H0041	RIGID STRUT	VT-3	NS	623-110
F3.ST	2P42-H0042	RIGID STRUT	VT-3	NS	623-110
F3.A	2P42-H0044	ANCHOR (WA)	VT-3	NS	623-111
F3.ST	2P42-H0046	RIGID STRUT	VT-3	NS	623-112
F3.ST	2P42-H0047	RIGID STRUT	VT-3	NS	623-112
F3.ST	2P42-H0048	RIGID STRUT	VT-3	NS	623-112
F3.ST	2P42-H0049	RIGID STRUT	VT-3	1	623-112
F3.SN	2P42-H0050	MECHANICAL SNUBBER (WA)	VT-3	NS	623-112
F3.R	2P42-H0051	RIGID SUPPORT	VT-3	NS	623-112
F3.SN	2P42-H0052	MECHANICAL SNUBBER	VT-3	1	623-112
F3.R	2P42-H0053	RIGID ROD	VT-3	NS	623-112
F3.R	2P42-H0054	RIGID SUPPORT	VT-3	NS	623-112
F3.G	2P42-H0055	RIGID GUIDE	VT-3	NS	623-112
F3.ST	2P42-H0056	RIGID STRUT	VT-3	NS	623-112
F3.R	2P42-H0114	RIGID ROD	VT-3	NS	623-108
F3.ST	2P42-H0115	RIGID STRUT	VT-3	NS	623-104

ITEM NO.	MARK NO.	COMPONENT DESCRIPTION	EXAM METHOD	PERIOD SCHED.	ISI ISO SS-305-
		EXAMINATION CATEGORY: F-A			
F3.R	2P42-H0116	RIGID ROD	VT-3	NS	623-111
F3.ST	2P42-H0117	RIGID STRUT	VT-3	NS	623-101
F3.STm	2P42-H0118	RIGID STRUT	VT-3	NS	623-101
F3.Gs	2P42-H0119	RIGID GUIDE	VT-3	NS	623-108
F3.Gs	2P42-H0120	RIGID GUIDE	VT-3	NS	623-108
F3.R	2P42-H0121	RIGID ROD	VT-3	NS	623-108
F3.R	2P42-H0122	RIGID ROD	VT-3	NS	623-104
F3.ST	2P42-H0123	RIGID STRUT	VT-3	NS	623-103
F3.STm	2P42-H0124	RIGID STRUT	VT-3	2	623-111
F3.STm	2P42-H0125	RIGID STRUT	VT-3	NS	623-111
F3.G	2P42-H0126	RIGID GUIDE	VT-3	NS	623-111
F3.G	2P42-H0127	RIGID GUIDE	VT-3	NS	623-101
F3.ST	2P42-H0128	RIGID STRUT	VT-3	NS	623-102
F3.ST	2P42-H0129	RIGID STRUT	VT-3	NS	623-108
F3.STm	2P42-H0130	RIGID STRUT	VT-3	NS	623-102
F3.ST	2P42-H0131	RIGID STRUT	VT-3	NS	623-102
F3.R	2P42-H0132	RIGID SUPPORT	VT-3	NS	623-103
F3.STm	2P42-H0133	RIGID STRUT	VT-3	NS	623-102
F3.STm	2P42-H0134	RIGID STRUT	VT-3	NS	623-103
F3.ST	2P42-H0135	RIGID STRUT	VT-3	NS	623-103
F3.ST	2P42-H0136	RIGID STRUT	VT-3	NS	623-102
F3.ST	2P42-H0137	RIGID STRUT	VT-3	NS	623-104
F3.ST	2P42-H0138	RIGID STRUT	VT-3	NS	623-108
F3.R	2P42-H0139	RIGID SUPPORT	VT-3	NS	623-105
F3.ST	2P42-H0140	RIGID STRUT	VT-3	NS	623-103
F3.STm	2P42-H0141	RIGID STRUT	VT-3	NS	623-103
F3.STm	2P42-H0142	RIGID STRUT	VT-3	NS	623-104
F3.G	2P42-H0143	RIGID GUIDE (WA)	VT-3	NS	623-108
F3.ST	2P42-H0144	RIGID STRUT	VT-3	NS	623-108
F3.Gs	2P42-H0145	RIGID GUIDE	VT-3	NS	623-108
F3.R	2P42-H0146	RIGID SUPPORT (WA)	VT-3	NS	623-108
F3.Gs	2P42-H0147	RIGID GUIDE	VT-3	NS	623-108
F3.R	2P42-H0148	RIGID SUPPORT (WA)	VT-3	3	623-104
F3.G	2P42-H0149	RIGID GUIDE	VT-3	NS	623-104
F3.ST	2P42-H0150	RIGID STRUT	VT-3	2	623-104
F3.R	2P42-H0151	RIGID SUPPORT	VT-3	NS	623-104
F3.Gs	2P42-H0152	RIGID GUIDE	VT-3	NS	623-104
F3.STm	2P42-H0153	RIGID STRUT (WA)	VT-3	NS	623-103
F3.A	2P42-H0265	ANCHOR (WA)	VT-3	NS	623-104
F3.A	2P42-H0273	ANCHOR (WA)	VT-3	NS	623-108

ITEM NO.	MARK NO.	COMPONENT DESCRIPTION	EXAM METHOD	PERIOD SCHED.	ISI ISO SS-305-
		EXAMINATION CATEGORY: F-A			
F3.G	2P42-H0309	RIGID GUIDE	VT-3	NS	623-111
F3.G	2P42-H0310	RIGID GUIDE	VT-3	NS	623-102
F3.SN	2P42-H0312	MECHANICAL SNUBBER	VT-3	NS	623-112
F3.R	2P42-H0314	RIGID SUPPORT	VT-3	NS	623-113
F3.ST	2P42-H0315	RIGID STRUT	VT-3	NS	623-109
F3.G	2P42-H0317	RIGID GUIDE	VT-3	NS	623-106
F3.G	2P45-H0021	RIGID GUIDE	VT-3	NS	792-102
F3.G	2P45-H0022	RIGID GUIDE	VT-3	NS	792-102
F3.G	2P45-H0023	RIGID GUIDE	VT-3	NS	792-102

* Located on piping that is ≤ .375" nom wall thickness, for which no Category C-F-2 weld examinations are required.
** Component support is inaccessible

7.0 AUGMENTED EXAMINATIONS

Section XI does not address inspections and examinations beyond those required in Class 1, 2, 3, MC and CC systems. The Augmented Section is included to identify components subject to examination as a result of commitments listed in documents such as NUREG's, GE SIL's, Regulatory Guides, Information Notices, etc.

For tracking within the inservice examination program database, augmented examinations are categorized in a manner similar to ASME XI. The augmented examination categories are identifiable by an 'X' as the first assigned letter and are given in the following table.

TABLE IWX-2500

CATEGORY X-A, REACTOR VESSEL INTERNALS					
Item No.	Parts Examined [Commitments]	Source Documents	Exam Meth	Extent of Exam	Exam Frequency
	Jet Pump Assemblies				
X1.10	Holddown beams [L00416] [B01037]	USAR 3.9.5.3.7 IEB 80-07 SIL 330-2 RICSIL 65 IEN 93-101 BWRVIP-41	UT	Beam bolt hole (BB-1), tapered (BB-3) and transition and beam end (BB-2) areas	See Note 1
X1.20	Sensing line bracket welds	SIL 420	VT-3	Bracket to diffuser welds on the 4 diffusers next to RR outlet nozzles	3rd Period of each Interval
X1.30	Jet pump mixer inlets	SIL 465	VT-3	Inlet perimeter and throat for crud buildup/ plating	two each refueling outage (same two; 1 ea loop)
X1.40	Riser brace to vessel pad & brace leaf to yoke welds (VIP #s RB-1 and RB-2) [B00877]	SIL 551 BWRVIP-41	EVT1	Accessible portions of the weld HAZs of the 8 welds	See Note 2
X1.50	Restrainer set screws [B00929] [B01083]	SIL 574 RICSIL 78 CR 03-04880	VT-3	Set screw tack welds for cracking and set screw to mixer contact	See Note 14
X1.51	Restrainer wedge assemblies (VIP # WD-1)	BWRVIP-41	VT-1	Wedge to mixer bearing surfaces for signs of wear	Each Refuel
X1.60	Thermal sleeve to safe end (VIP # TS-2) and thermal sleeve modification welds	BWRVIP-41	EVT1	Accessible portions of weld HAZs	See Note 4
X1.70	Riser pipe elbow welds (VIP #s RS-1 and RS-2) [B01134]	IN 97-02 SIL 605-1 BWRVIP-41	EVT1	Accessible portions of weld HAZs	See Note 3
X1.71	Riser pipe to transition piece welds (VIP # RS-3)	BWRVIP-41	EVT1	Accessible portions of weld HAZs on riser side of welds	See Note 5

TABLE IWX-2500 CONT.

CATEGORY X-A, REACTOR VESSEL INTERNALS CONT.					
Item No.	Parts Examined [Commitments]	Source Documents	Exam Meth	Extent of Exam	Exam Frequency
	Jet Pump Assemblies Cont.				
X1.72	Riser pipe to restrainer bracket and to riser brace welds (VIP #s RS-6, RS-7, RS-8 and RS-9)	BWRVIP-41	EVT1	Accessible portions of weld HAZs on riser side of welds	See Note 2
X1.80	Inlet elbow to sleeve and sleeve to inlet nozzle welds (VIP #s IN-1 and IN-2)	BWRVIP-41	EVT1	Accessible portions of weld HAZs on the sleeve side of welds	See Note 2
X1.81	Inlet mixer barrel to adapter welds (VIP # MX-2)	BWRVIP-41	N/A	N/A	See Note 17
X1.90	Diffuser collar to shell, shell to tailpipe, tailpipe to lower ring, and lower ring to shroud support plate welds (VIP #s DF-1, DF-2, DF-3, and AD-2)	BWRVIP-41	EVT1	Accessible portions of weld HAZs on riser side of welds	See Notes 2 and 15
	IRM/SRM Dry Tubes				
X2.10	IRM and SRM dry tubes [B00548] [B01030]	SIL 409 R-2 RICSIL 73	VT-3	Upper 2 feet of dry tube for cracking	Each Period
X2.11	LPRM dry tubes	SIL 409 R-2	VT-3	Upper 2 feet of dry tube for cracking	See Note 13
	Core Spray Piping and Spargers				
X3.10	All creviced and tee-box to pipe core spray piping welds (VIP #s P3a and P5) [B01082] [B01091]	SIL 289-1, S-2 IEB 80-13 BWRVIP-18	EVT1	Accessible portions of weld HAZs	Each Refuel
X3.11	All other core spray piping welds (VIP #s P1, P1a, P2, P2a, P3b, P4a, b, c, d, and P6) [B01082] [B01091]	SIL 289-1, S-2 IEB 80-13 BWRVIP-18	EVT1	Accessible portions of weld HAZs	25% Each Refuel See Note 18 for P1s
X3.12	Core spray piping brackets (VIP # PB) [B01082] [B01091]	SIL 289-1, S-2 IEB 80-13 BWRVIP-18	EVT1	Examine bolting and tack welds for integrity	Every 4th Refuel (Baseline RFO5)
X3.13	Core spray piping to shroud flange connections (VIP # P-8)	BWRVIP-18	VT-1	Examine bolting and tack welds for integrity	Every 4th Refuel (Baseline RFO6)
X3.20	Sparger piping welds (VIP #s S2 and S4) [B01082] [B01091]	SIL 289-1, S-2 IEB 80-13 BWRVIP-18	EVT1	Accessible portions of weld HAZs	100% Every 2 Refuel Cycles
X3.21	Sparger spray nozzle welds (VIP #s S3a & b) [B01082] [B01091]	SIL 289-1, S-2 IEB 80-13 BWRVIP-18	VT-1	Accessible portions of weld HAZs	50% Every 2 Refuel Cycles

TABLE IWX-2500 CONT.

CATEGORY X-A, REACTOR VESSEL INTERNALS CONT.					
Item No.	Parts Examined [Commitments]	Source Documents	Exam Meth	Extent of Exam	Exam Frequency
	Core Spray Piping and Spargers Cont.				
X3.22	Sparger brackets (VIP # SB) [B01082] [B01091]	SIL 289-1, S-2 IEB 80-13 BWRVIP-18	VT-1	Examine bolting and tack welds for integrity	100% Every 2 Refuel Cycles
	Steam Dryer				
X4.10	Steam Dryer channels	SIL 474	VT-1	Examine channel welds for cracking	1st Period of Each Interval
X4.11	Steam Dryer Crud Exams	CA 03-1995-24	VT-3	Examine areas adjacent to the Main Steam Nozzles for unusual crud	Every Refuel (starting RFO10)
X4.12	Steam Dryer Welds	SIL 644, Supp 1 CA 03-5127-4 BWRVIP-139-A	VT-1	Examine Welds and Heat Affected Zones	RFO13 See Note 19
	Core Shroud				
X5.10	BWRVIP Category B welds (VIP #s H-3, H-4, H-6A and H-7) [L02098]	GL 94-03 SIL 572-1 BWRVIP-76-A BWRVIP-200	UT	Accessible portions of welds H-3(1-sided) & H-4,-6A &-7 (both sides)	See Notes 6 and 7
X5.11	Additional welds for expansion to BWRVIP Category C scope (VIP #s H-1, H-2, H-5 and H-6), and, as applicable, the intersecting vertical welds	BWRVIP-76-A	UT	Accessible portions of welds	See Note 7
X5.20	Shroud support plate to vessel weld (VIP # H-9)	BWRVIP-38 BWRVIP-104	UT	At least 10% of the welds circumference	See Note 8
X5.21	Shroud support plate to shroud support cylinder weld (VIP # H-8)	BWRVIP-38 BWRVIP-104	EVT1	At least 10% of the welds circumference	See Note 8
X5.30	Shroud Support Access Hole Cover Welds	SIL 462 BWRVIP-180	EVT1	Accessible portions of weld and HAZ	6 years (3RO)
X5.40	Core Shroud Support Leg Welds (VIP #'s H-10, H-11 and H-12)	BWRVIP-38	EVT1	Welds and HAZs as accessible	See Note 16
	Loose Parts Concerns & Brackets				
X6.10	Miscellaneous vessel appurtenances that could cause or become loose parts	None	VT-3	General exam for integrity	Each Interval
X6.11	Abandoned vibration monitoring instrumentation	PIFRA 96-1161-001	VT-1	6 items of Abandoned VMI	See Note 9
X6.12	Feedwater and Steam Dryer Support bracket vessel attachment welds	BWRVIP-48-A	EVT1	6 attachment welds for each	Each Interval

TABLE IWX-2500 CONT.

CATEGORY X-A, REACTOR VESSEL INTERNALS CONT.					
Item No.	Parts Examined [Commitments]	Source Documents	Exam Meth	Extent of Exam	Exam Frequency
X6.13	Damaged FW Sparger Nozzles of the 150 Degree Sparger	PIFRA 97-1573-001	VT-1	Examine Nozz 5 through 8 from CCW end	See Note 11
X6.14	Shroud Head Stud Assembly Modifications (SHSAM)	CA 02-4534-02 SIL 650	VT-3	Examine anti-rotation pins for wear	Each Refuel Except #2 & #8 - See Note 20
X6.15	Reactor Vessel Upper Interior	CA 03-1995-24	VT-3	Examine from FW sparger up to flange for crud deposits	Each Refuel
	Top Guide Assembly				
X7.10	Studs and tack welds	BWRVIP-26-A	VT-3	Examine studs and tack welds for integrity	Each Interval
X7.20	Rim areas containing weld HAZ and bottom 2" of interior side surfaces of 2 cells in weld plane/axis excluding bottom edge of grid cells	BWRVIP-183	EVT-1	Examine welds, HAZ and grid beam cells for flaws	Every 6 years (3RO) - rotating sample for cells
	LPCI Coupling				
X8.10	Thermal sleeve to elbow, elbow to fitting, and elbow to extension welds (VIP 3#s 6-1a through 6-1d)	BWRVIP-42-A	EVT1	Accessible portions of weld HAZs	See Note 12
X8.20	LPCI Strut to shroud, strut to elbow pad and pad to elbow welds (VIP #s 6-4, 6-5a and 6-5b)	BWRVIP-42-A	EVT1	Accessible portions of weld HAZs	See Note 12
X8.30	Shroud attachment ring to shroud welds (VIP # 6-6b)	BWRVIP-42-A	EVT1	Accessible portions of weld HAZs	See Note 12
	Lower Plenum				
X9.10	Control rod guide tube sleeve to alignment lug welds and fuel support alignment pins (VIP # CRGT-1 and ARPIN-1)	BWRVIP-47-A	VT-3	Verify lug and pin integrity	See Note 10
X9.20	Control rod guide tube body to sleeve to and base to body welds (VIP # CRGT-2 and CRGT-3)	BWRVIP-47-A	EVT1	Weld HAZs from inside of guide tube	See Note 10

TABLE IWX-2500 CONT.

NOTES:

1. USAR and BWRVIP-41, requirement for Group 2 beams is to examine the beams after 10 years of operation and then re-inspect every 4 years with Normal Water Chemistry or 6 years with "effective" (i.e., as defined by BWRVIP-62 and related correspondence) Hydrogen Water Chemistry. Perry's original beams were replaced with Group 2 crack resistant beams in RFO4. Startup from RFO4 was 8/13/94, therefore, the beams were examined in the refueling outage preceding 8/13/04 (RFO9) again in 2009 (RFO12) and will be re-examined again in 2015 (RFO15). In RFO11, jet pump 6 was disassembled to re-seat the transition piece and its beam was replaced with a Group 3 beam. The BWRVIP-41 requirements for Group 3 beams are to examine the beams at or before 20 years of service and then reinspection is the same as Group 2 beams. Start up from RFO11 was 5/13/07; therefore, the beam will first be examined in the refueling outage preceding 5/13/27 (RFO21).
2. 50% to be examined in RFO8 or RFO9, remaining 50% within 6 years of RFO8, and then reexamine 25% each 6 years thereafter. These components are classified Medium or Low priority per BWRVIP-41.
3. 100% examined in RFO6, 50% to be reexamined by RFO10 and then 25% each 6 years thereafter.
4. Welds are inaccessible for current examination technology, but examination techniques are under development by the BWRVIP Inspection Committee. Once examination techniques have been developed, exams will be scheduled in accordance with the BWRVIP guidelines.
5. 50% to be examined in RF8, remaining 50% in RFO9 and then reexamine 50% each 6 years thereafter. These components are classified High priority per BWRVIP-41.
6. Baseline examinations were performed in RFO7 with the frequency of subsequent examinations dependent upon coverage and examination results IAW BWRVIP-76 and as documented in Calculation EA-0235. The first re-inspection was performed in RFO10 and the next scheduled is RFO15.
7. Not scheduled for examination unless scope expansion is warranted from the results of the Category B examinations (i.e., cracking equal to or greater than 10% of the inspected length, in which case the shroud is reclassified as Category C) IAW BWRVIP-76-A. The scope expansion will also involve those intersecting vertical welds that do not meet the BWRVIP-76-A screening criteria.
8. Baseline exams performed using EVT-1 method in RFO7 with reexamination scheduled for 6 years thereafter. Due to revised BWRVIP recommendations for the H-9 weld provided in BWRVIP-104, the exam method was changed to UT. UT has a reexamination frequency of once every 10 years.
9. To be examined in RFO7 and then within the first period of subsequent Intervals.
10. At least 5% (i.e. 9) by RFO8 and an additional amount by the end of the following 6 years such that a total of 10% (i.e. 18) are examined. There is no re-inspection criteria for the 3rd Interval.
11. Examine every other refueling outage starting in RFO7. If after 3 examination cycles no IGSCC is found, then no further examinations will be required.
12. Baseline exams completed in RFO7, then 1/3 (i.e., one loop) every BWRVIP-42-A LPCI Inspection Cycle (i.e., every 2 refueling outages for plants on 24 month refueling cycles).
13. Examine at least 10% of the 41 LPRM dry tubes every refueling outage starting in RFO9. The sample will primarily be based on those that are made accessible by the scheduled fuel movement activities and partial examinations (i.e., tubes accessible from only one side) can be credited towards the 10% (e.g., examination of 10 LPRM's from only one side is equivalent to 5 complete exams).
14. The set screw gap issue, calculations, and tracking of Perry's gaps is documented in Technical Assignment File (TAF) 81787. In accordance with CR 03-04880, the set screw tack welds and gaps are no longer required to be examined every refueling outage. Starting in RFO10, they will only require examination if the corresponding restrainer bracket wedge assembly shows indications of wear or vibratory damage.
15. At Perry there are 2 welds located at the DF-3 location, identified in the schedule tables as DF-3A and DF-3B.
16. Routine examination of the Shroud Support Leg welds are not required, however, if access is provided through jet pump disassembly or other means, those welds that are made accessible shall be examined to the extent practical. If access does not allow EVT-1 resolution, perform the best examination possible with the given access.
17. The MX-2 welds of jet pumps 1-10 were examined in RFO8, but BWRVIP-41 clarifies that these welds do not require examination so they will no longer be scheduled.
18. The BWRVIP-18 requirement for the P1 and P1a welds is 1/4 (25%) each refueling outage, but they will be examined every other outage as these welds are at or inside the nozzle bore and thus coverage will be poor and the exams cannot meet EVT1 requirements. As such, re-inspection to the extent possible every other outage is more prudent.
19. Baseline BWRVIP-139-A inspection of the Steam Dryer was performed in RFO12. No specific re-inspection recommendations are made in BWRVIP-139-A. The re-inspection recommendations of SIL 644, Revision 1, i.e., examined susceptible areas every other refueling outage, were considered based on the results of the baseline exams that follow-up on indications found during RFO12 was required.
20. ECP 06-0021 installed repair hardware to eliminate the anti-rotation pin wear issue. SHSAM #2 and #8 do not require inspection every refueling outage now that the repair is in-place.

CATEGORY X-B & E HIGH ENERGY BREAK EXCLUSION REGIONS					
Item No.	Parts Examined [Commitments]	Source Documents	Exam Meth	Extent of Exam	Exam Frequency
	Piping Welds (X-B)				
X10.10	Large bore piping welds in high energy break exclusion regions [F00793] [F00862]	USAR 5.2.4.9 TAF-81871, RI-ISI of BER	UT	Same as Category R-A Exam Volume	Each Interval
X10.11	Small bore piping welds in high energy break exclusion regions [F00793] [F00862]	USAR 5.2.4.9 TAF-81871, RI-ISI of BER	UT	Extent of volumetric exam for socket welds TBD	Each Interval
	Flued Head Welds (X-E)				
X10.20	Main Steam and Feedwater containment penetration flued head fitting to process pipe welds [F00793]	USAR 5.2.4.9	UT	Entire weld volume	Each Interval

CATEGORY X-C, NUREG 0619 EXAMS[1]					
Item No.	Parts Examined [Commitments]	Source Documents	Exam Meth	Extent of Exam	Exam Frequency
X11.10	Feedwater sparger exams [B00918]	NUREG-0619	VT-3	Examine flow holes and weld in sparger arms and tees	Every 4th Refuel
X11.15	Feedwater Sparger Bracket pins	SIL 658	VT-3	Examine sparger bracket pins for wear	Every 4th Refuel with X11.10 exam
X11.20	Feedwater nozzle inner radii and bore [B00918]	NUREG-0619	UT	NUREG 0619 zones 1, 2A, 2B, 3, 4A, 4B and 5	Each Interval

NOTES:
1. Examinations are to comply with the requirements of NUREG-0619 as modified by General Electric report GE-NE-523-A71-0594-A, "Alternate BWR Feedwater Nozzle Inspection Requirements," and as documented in Technical Assignment File No. 81835.

CATEGORY X-F, RPV SHELL TO FLANGE AND HEAD TO FLANGE WELDS					
Item No.	Parts Examined [Commitments]	Source Documents	Exam Meth	Extent of Exam	Exam Frequency
X14.10	RPV shell to flange weld [S00453] Credited under code category B-A.	USAR 5.3.1.5	UT	Outside surface of weld and HAZ for flaws ≤ .24" deep	Each Interval
X14.20	RPV head to flange weld [S00453] Credited under code category B-A.	USAR 5.3.1.5	MT	Weld and HAZ	Each Interval

TABLE IWX-2500 CONT.

CATEGORY X-G, PIPING WELD EXAMINATIONS FOR IGSCC					
Item No.	Parts Examined [Commitments]	Source Documents	Exam Meth	Extent of Exam	Exam Frequency
	Resistant Material Welds (NUREG 0313 Category A)				
X15.10	Type 304 shop welds with solution annealing [L01551] [L01552] [L01548]	NUREG-0313 Rev. 2 GL 88-01	UT	Weld and HAZ	Each Interval
X15.11	Type 304 field welds with corrosion resistant clad (CRC) inlay [L01551] [L01552] [L01548]	NUREG-0313 Rev. 2 GL 88-01	UT	Weld and HAZ	Each Interval
X15.12	Type 316NG (low carbon) welds [L01551] [L01552] [L01548]	NUREG-0313 Rev. 2 GL 88-01	UT	Weld and HAZ	Each Interval
	Stress Improved Non-resistant Material Welds (NUREG 0313 Category C)				
X15.20	Mechanically stress improved inconel 182 welds [L01551] [L01552] [L01548]	NUREG-0313 Rev. 2 GL 88-01 SIL 455, R-2 BWRVIP-75-A	UT See Note 1	Weld and HAZ	Every 10 years
	Stress Improved Flawed Welds (NUREG 0313 Category E)				
X15.30	Welds with flaws that were mechanically stress improved or weld overlay repaired [L01551] [L01552] [L01548]	NUREG-0313 Rev. 2 GL 88-01 SIL 455, R-2 BWRVIP-75-A	UT See Note 1	Weld and HAZ	See Note 2

NOTES:

1. The UT recommendations of SIL 455, Rev. 2, are applicable to welds containing Inconel Alloy 182 material (i.e., Item No.s X15.20 and X15.30). Note that since the issuance of SIL 455, Appendix VIII, Supplement 10 has become mandatory and procedures that meet the Appendix VIII requirements meet or exceed the recommendations in SIL 455.
2. The frequency for the IGSCCC Category E welds was reduced from once every two refueling outages to once every 6 years for stress improved Category E welds and once every 10 years for weld overlay repaired Category E welds as technically justified by BWRVIP-75-A and accepted by the NRC. The prerequisite of having at least 1 qualifying inservice examination following stress improvement or weld overlay repair was met in RFO7 for weld 1B13-N4E-KB and in RFO8 for weld 1B13-N4C-KB.

CATEGORY X-H, INSTRUMENT NOZZLES FOR IGSCC					
Item No.	Parts Examined [Commitments]	Source Documents	Exam Meth	Extent of Exam	Exam Frequency
X16.10	Instrument nozzles [B00920]	SIL 571	PT	Socket weld and all of the accessible surfaces of 2 of the 14 nozzle assemblies	Each Interval See Note 1

NOTES:

1. 2 of the 14 instrument nozzles assemblies will be examined each interval starting after 15 years of operation (i.e., RFO9). If cracking is found, the sample will be expanded to 50%, and then again to 100% if additional cracking is found.

7.1 Exemptions

There are no exemptions noted for the augmented components.

7.2 Examination Selection Process

Selections of components and items are based on the requirements delineated in each particular commitment.

7.3 Additional Examinations

For GL 88-01 augmented examinations, additional examinations are performed as follows:

- If one or more cracked welds in IGSCC Categories A or C are found by a sample inspection during the 10 year interval, inspect an additional sample of the welds in that category, approximately equal in number to the original outage sample. This additional sample should be similar in distribution (according to pipe size, system, and location) to the original outage sample, unless it is determined that there is a technical reason to select a different distribution. If any further cracked welds are found in the additional sample, inspect all the welds in that IGSCC Category. CEI Commitment: L01548

- If significant crack growth or additional cracks are found during the inspection of an IGSCC Category E weld, all other Category E welds should be examined. Significant crack growth for SI mitigated Category E welds is defined as growth to a length or depth exceeding the criteria for SI mitigation (either 10% of circumference in length or 30% of the wall in depth).

For core shroud examinations performed in accordance with BWRVIP-76, if cracking greater than or equal to 10% of the weld length inspected is found in any of the Category B exams (i.e., H-3, H-4, H-6A & H-7), then the scope will be expanded to a Category C inspection (i.e., H-1 through H-7).

For all other augmented examinations, additional examinations are performed in accordance with the particular commitment and/or as dispositioned in corrective action documents.

7.4 Successive Examinations

Successive examinations are based on the requirements of each particular commitment. For the core shroud and core spray piping/sparger exams, reinspection shall be in accordance with BWRVIP-07 and 18 respectively. CEI Commitment: #L02098

7.5 Relief Requests

There are no regulatory requirements for augmented examinations that are not being met. Therefore, there are no Inservice Relief Requests for the augmented examinations.

7.6 Inservice Examination Table

This section contains the listing of Augmented components subject to examination. The information presented in the tables is defined below:

1. EXAMINATION CATEGORY - The basis for organizing components subject to examination.

2. ITEM NO. - A division within an examination category which separates the specific examination requirements.

3. MARK NO. - A unique identification number assigned to each weld or component. Mark numbers followed by the "@" symbol are those which are also listed under the Code examination tables of sections 2 through 6 herein.

4. COMPONENT DESCRIPTION - A brief description used to identify the weld or component.

5. EXAM METHOD - This abbreviation identifies the unique non-destructive examination method(s) required for the weld or component. The abbreviations used in this listing are as follows:

MT	-	Magnetic Particle Testing
PT	-	Dye Penetrant Testing
UT	-	Ultrasonic Testing
VT-1	-	Visual Examination for Surface Conditions
VT-2	-	Visual Examination for Leakage
VT-3	-	Visual Examination for General Conditions
EVT1	-	Visual Examination with precleaning and resolving the ASME Section XI VT-1 0.044 inch characters. Camera speed shall not exceed 0.5 inch/second and the camera angle to not exceed 30 degrees from perpendicular to the surface

6. SCHED. - This column identifies the inspection period, or refueling outage(s), in which the weld or component is tentatively scheduled to receive examination. Scheduling by period will indicate 1, 2, 3, or any combination of these numbers. Scheduling by refuel will indicate "R" and the particular outage(s) to be performed. Normally there will be 2 refueling outages within each period. When scheduled by period, examinations can be completed in either of the refueling outages as appropriate to facilitate other outage activities, but must be completed by the end of the period. Asterisk or plus signs may follow the period numbers and indicate scheduling peculiarities that are explained in notes at the end of the applicable Examination Category listing. For those welds or components not scheduled for examination, the letters "NS" will be inserted in place of an inspection period. Where the scheduling of components for augmented examinations is accomplished by the performance of the required Code examinations, a asterisk(s) or other symbols will follow the "NS" and notes will be found at the end of the augmented examination category indicating the particular scheduling requirements.

Scheduling of exams for welds which fall under the scope of GL 88-01 is in accordance with the staff position on inspection schedules as modified by Risk-Informed ISI and by BWRVIP-75-A. The IGSCC Category A welds (i.e., NUREG 0313 Categorization) are all identified within this section, but as their scheduling requirements are determined by the Risk-Informed ISI application, those requiring examination are scheduled under Risk-Informed Category R-A (formerly Code Categories B-J and B-F) in Section 2.0. The IGSCC Category C and E welds are also identified within this section. For these welds, the specific outage(s) in which they must be performed in order to meet the examination frequencies outlined in BWRVIP-75-A are identified in the schedule column. They will also be shown as scheduled in Section 2.0 for the refueling outage in which Code credit is to be taken. Note that the prerequisite of having at least 1 qualifying inservice examination following stress improvement or weld overlay repair was met in RFO7 for weld 1B13-N4E-KB and in RFO8 for weld 1B13-N4C-KB. L01552

ITEM NO.	MARK NO.	COMPONENT DESCRIPTION	EXAM METHOD	SCHED.	ISI ISO SS-305-
		EXAMINATION CATEGORY: X-A			
X9.10	1B13-CRGT-1a	9 CRD GUIDE TUBE SLEEVE TO ALIGNMENT LUG WELDS	VT-3	NS	006-120
X9.10	1B13-CRGT-1b	9 CRD GUIDE TUBE SLEEVE TO ALIGNMENT LUG WELDS	VT-3	NS	006-120
X9.20	1B13-CRGT-2a	9 CRD GUIDE TUBE BODY TO SLEEVE WELDS	EVT1	NS	006-120
X9.20	1B13-CRGT-2b	9 CRD GUIDE TUBE BODY TO SLEEVE WELDS	EVT1	NS	006-120
X9.20	1B13-CRGT-3a	9 CRD GUIDE TUBE BASE TO BODY WELDS	EVT1	NS	006-120
X9.20	1B13-CRGT-3b	9 CRD GUIDE TUBE BASE TO BODY WELDS	EVT1	NS	006-120
X7.10	1B13-CSPT-TGTW	CORE SUPPORT STRUCTURE, TOP GUIDE STUD TACK WELDS	VT-3	R13	006-123
X7.20	1B13-CSPT-TGGB	CORE SUPPORT STRUCTURE, TOP GUIDE GRID BEAM WELDS AND CELLS	EVT-1	R13,16	006-123
X3.11	1B13-CSHP-P1	HP CORE SPRAY THERMAL SLEEVE TO FLOW DIVIDER WELDS P1&P1A	EVT1	R-EVEN	006-113
X3.10	1B13-CSHP-CW-P2	HP CORE SPRAY FLOW DIVIDER TO HORIZ. PIPE WELDS P2&P2A	EVT1	R15	006-113
X3.11	1B13-CSHP-CW-P3b	HP CORE SPRAY HORIZONTAL PIPE TO COUPLING	EVT1	R15	006-113
X3.10	1B13-CSHP-CW-P3a	HP CORE SPRAY COUPLING TO HORIZONTAL PIPE	EVT1	R-All	006-113
X3.11	1B13-CSHP-CW-P4a	HP CORE SPRAY HORIZ PIPE TO ELBOW (SOL. ANNEALED)	EVT1	NS	006-113
X3.11	1B13-CSHP-CW-P4b	HP CORE SPRAY ELBOW TO UPPER RISER PIPE (SOL. ANNEALED)	EVT1	NS	006-113
X3.10	1B13-CSHP-CW-P5	HP CORE SPRAY UPPER RISER PIPE TO COUPLING	EVT1	R-All	006-113
X3.11	1B13-CSHP-CW-P6	HP CORE SPRAY COUPLING TO LOWER RISER PIPE	EVT1	R15	006-113
X3.11	1B13-CSHP-CW-P4c	HP CORE SPRAY LOWER RISER PIPE TO ELBOW	EVT1	R15	006-113
X3.11	1B13-CSHP-CW-P4d	HP CORE SPRAY ELBOW TO SHROUD FLANGE	EVT1	R15	006-113
X3.13	1B13-CSHP-CW-P8	HP CORE SPRAY SHROUD FLANGE TO SHROUD (BOLTED)	VT-1	R14	006-113
X3.10	1B13-CSHP-CCW-P2	HP CORE SPRAY FLOW DIVIDER TO HORIZ. PIPE WELDS P2&P2A	EVT1	R16	006-113
X3.11	1B13-CSHP-CCW-P3b	HP CORE SPRAY HORIZONTAL PIPE TO COUPLING	EVT1	R16	006-113
X3.10	1B13-CSHP-CCW-P3a	HP CORE SPRAY COUPLING TO HORIZONTAL PIPE	EVT1	R-All	006-113
X3.11	1B13-CSHP-CCW-P4a	HP CORE SPRAY HORIZ PIPE TO ELBOW (SOL. ANNEALED)	EVT1	NS	006-113
X3.11	1B13-CSHP-CCW-P4b	HP CORE SPRAY ELBOW TO UPPER RISER PIPE (SOL. ANNEALED)	EVT1	NS	006-113
X3.10	1B13-CSHP-CCW-P5	HP CORE SPRAY UPPER RISER PIPE TO COUPLING	EVT1	R-All	006-113
X3.11	1B13-CSHP-CCW-P6	HP CORE SPRAY COUPLING TO LOWER RISER PIPE	EVT1	R16	006-113
X3.11	1B13-CSHP-CCW-P4c	HP CORE SPRAY LOWER RISER PIPE TO ELBOW	EVT1	R16	006-113
X3.11	1B13-CSHP-CCW-P4d	HP CORE SPRAY ELBOW TO SHROUD FLANGE	EVT1	R16	006-113
X3.13	1B13-CSHP-CCW-P8	HP CORE SPRAY SHROUD FLANGE TO SHROUD (BOLTED)	VT-1	R14	006-113
X3.12	1B13-CSHP-PB	HP CORE SPRAY PIPING BRACKETS (3)	EVT1	R13,17	006-114
X3.11	1B13-CSLP-P1	LP CORE SPRAY THERMAL SLEEVE TO FLOW DIVIDER WELDS P1&P1A	EVT1	R-ODD	006-113
X3.10	1B13-CSLP-CW-P2	LP CORE SPRAY FLOW DIVIDER TO HORIZ. PIPE WELDS P2&P2A	EVT1	R13,17	006-113
X3.11	1B13-CSLP-CW-P3b	LP CORE SPRAY HORIZONTAL PIPE TO COUPLING	EVT1	R13,17	006-113
X3.10	1B13-CSLP-CW-P3a	LP CORE SPRAY COUPLING TO HORIZONTAL PIPE	EVT1	R-All	006-113
X3.11	1B13-CSLP-CW-P4a	LP CORE SPRAY HORIZ PIPE TO ELBOW (SOL. ANNEALED)	EVT1	NS	006-113
X3.11	1B13-CSLP-CW-P4b	LP CORE SPRAY ELBOW TO UPPER RISER PIPE (SOL. ANNEALED)	EVT1	NS	006-113
X3.10	1B13-CSLP-CW-P5	LP CORE SPRAY UPPER RISER PIPE TO COUPLING	EVT1	R-All	006-113

ITEM NO.	MARK NO.	COMPONENT DESCRIPTION	EXAM METHOD	SCHED.	ISI ISO SS-305-
		EXAMINATION CATEGORY: X-A			
X3.11	1B13-CSLP-CW-P6	LP CORE SPRAY COUPLING TO LOWER RISER PIPE	EVT1	R13,17	006-113
X3.11	1B13-CSLP-CW-P4c	LP CORE SPRAY LOWER RISER PIPE TO ELBOW	EVT1	R13,17	006-113
X3.11	1B13-CSLP-CW-P4d	LP CORE SPRAY ELBOW TO SHROUD FLANGE	EVT1	R13,17	006-113
X3.13	1B13-CSLP-CW-P8	LP CORE SPRAY SHROUD FLANGE TO SHROUD (BOLTED)	VT-1	R14	006-113
X3.10	1B13-CSLP-CCW-P2	LP CORE SPRAY FLOW DIVIDER TO HORIZ. PIPE WELDS P2&P2A	EVT1	R14	006-113
X3.11	1B13-CSLP-CCW-P3b	LP CORE SPRAY HORIZONTAL PIPE TO COUPLING	EVT1	R14	006-113
X3.10	1B13-CSLP-CCW-P3a	LP CORE SPRAY COUPLING TO HORIZONTAL PIPE	EVT1	R-All	006-113
X3.11	1B13-CSLP-CCW-P4a	LP CORE SPRAY HORIZ PIPE TO ELBOW (SOL. ANNEALED)	EVT1	NS	006-113
X3.11	1B13-CSLP-CCW-P4b	LP CORE SPRAY ELBOW TO UPPER RISER PIPE (SOL. ANNEALED)	EVT1	NS	006-113
X3.10	1B13-CSLP-CCW-P5	LP CORE SPRAY UPPER RISER PIPE TO COUPLING	EVT1	R-All	006-113
X3.11	1B13-CSLP-CCW-P6	LP CORE SPRAY COUPLING TO LOWER RISER PIPE	EVT1	R14	006-113
X3.11	1B13-CSLP-CCW-P4c	LP CORE SPRAY LOWER RISER PIPE TO ELBOW	EVT1	R14	006-113
X3.11	1B13-CSLP-CCW-P4d	LP CORE SPRAY ELBOW TO SHROUD FLANGE	EVT1	R14	006-113
X3.13	1B13-CSLP-CCW-P8	LP CORE SPRAY SHROUD FLANGE TO SHROUD (BOLTED)	VT-1	R14	006-113
X3.12	1B13-CSLP-PB	LP CORE SPRAY PIPING BRACKETS (3)	EVT1	R13,17	006-114
X3.20	1B13-CSS-7-S2	CORE SPRAY SPARGER TEE TO SPARGER PIPE WELDS (2)	EVT1	R-EVEN	006-115
X3.21	1B13-CSS-7-S3ab	CORE SPRAY SPARGER SPRAY NOZZLE WELDS (2 EA NOZZ)	VT-1	R14	006-115
X3.20	1B13-CSS-7-S4	CORE SPRAY SPARGER PIPE TO END CAP WELDS (2)	EVT1	R-EVEN	006-115
X3.22	1B13-CSS-7-SB	CORE SPRAY SPARGER BRACKETS (3)	VT-1	R-EVEN	006-116
X3.20	1B13-CSS-173-S2	CORE SPRAY SPARGER TEE TO SPARGER PIPE WELDS (2)	EVT1	R-ODD	006-115
X3.21	1B13-CSS-173-S3ab	CORE SPRAY SPARGER SPRAY NOZZLE WELDS (2 EA NOZZ)	VT-1	R15	006-115
X3.20	1B13-CSS-173-S4	CORE SPRAY SPARGER PIPE TO END CAP WELDS (2)	EVT1	R-ODD	006-115
X3.22	1B13-CSS-173-SB	CORE SPRAY SPARGER BRACKETS (3)	VT-1	R-ODD	006-116
X3.20	1B13-CSS-187-S2	CORE SPRAY SPARGER TEE TO SPARGER PIPE WELDS (2)	EVT1	R-ODD	006-115
X3.21	1B13-CSS-187-S3ab	CORE SPRAY SPARGER SPRAY NOZZLE WELDS (2 EA NOZZ)	VT-1	R13,17	006-115
X3.20	1B13-CSS-187-S4	CORE SPRAY SPARGER PIPE TO END CAP WELDS (2)	EVT1	R-ODD	006-115
X3.22	1B13-CSS-187-SB	CORE SPRAY SPARGER BRACKETS (3)	VT-1	R-ODD	006-116
X3.20	1B13-CSS-353-S2	CORE SPRAY SPARGER TEE TO SPARGER PIPE WELDS (2)	EVT1	R-EVEN	006-115
X3.21	1B13-CSS-353-S3ab	CORE SPRAY SPARGER SPRAY NOZZLE WELDS (2 EA NOZZ)	VT-1	R16	006-115
X3.20	1B13-CSS-353-S4	CORE SPRAY SPARGER PIPE TO END CAP WELDS (2)	EVT1	R-EVEN	006-115
X3.22	1B13-CSS-353-SB	CORE SPRAY SPARGER BRACKETS (3)	VT-1	R-EVEN	006-116
X5.11	1B13-CS-H1	TOP GUIDE HEAD FLANGE TO TOP GUIDE CYLINDER	UT	NS	006-122
X5.11	1B13-CS-H2	TOP GUIDE FLANGE TO TOP GUIDE CYLINDER	UT	NS	006-122
X5.10	1B13-CS-H3	SHROUD HEAD FLANGE TO CENTRAL UPPER CYLINDER	UT	R15	006-122
X5.10	1B13-CS-H4	SHROUD CENTRAL UPPER CYL TO CENTRAL MIDDLE CYL	UT	R15	006-122
X5.11	1B13-CS-H5	SHROUD CENTRAL MIDDLE CYL TO CENTRAL LOWER CYL	UT	NS	006-122

ITEM NO.	MARK NO.	COMPONENT DESCRIPTION	EXAM METHOD	SCHED.	ISI ISO SS-305-
		EXAMINATION CATEGORY: X-A			
X5.10	1B13-CS-H6A	SHROUD CENTRAL LOWER CYLINDER TO CORE PLATE FLANGE	UT	R15	006-122
X5.11	1B13-CS-H6B	CORE PLATE FLANGE TO SHROUD LOWER CYLINDER	UT	NS	006-122
X5.10	1B13-CS-H7	SHROUD LOWER CYLINDER TO SHROUD SUPPORT CYLINDER	UT	R15	006-122
X5.21	1B13-CS-H8	SHROUD SUPPORT CYLINDER TO SHROUD SUPPORT PLATE	EVT1	R15	006-121
X5.20	1B13-CS-H9	SHROUD SUPPORT PLATE TO RX VESSEL WALL	EVT1/UT	R15	006-121
X9.10	1B13-FSGT-AP1a	9 CRD GUIDE TUBE & FUEL SUPPORT ALIGNMENT PINS	VT-3	NS	006-120
X9.10	1B13-FSGT-AP1b	9 CRD GUIDE TUBE & FUEL SUPPORT ALIGNMENT PINS	VT-3	NS	006-120
X6.12	1B13-FWSB-WA @	FEEDWATER SPARGER BRACKET WELDED ATTACHMENTS	EVT1	NS+	006-118
X6.13	1B13-FWS-DAM	150 DEGREE FW SPARGER DAMAGE, NOZZ 5-8 FROM CCW END	VT-1	R-ODD	006-118
X2.10	1B13-IRM-16/13	IRM INSTRUMENT DRY TUBE B	VT-3	R-ODD	006-117
X2.10	1B13-IRM-16/53	IRM INSTRUMENT DRY TUBE A	VT-3	R-ODD	006-117
X2.10	1B13-IRM-24/29	IRM INSTRUMENT DRY TUBE D	VT-3	R-ODD	006-117
X2.10	1B13-IRM-24/37	IRM INSTRUMENT DRY TUBE C	VT-3	R-ODD	006-117
X2.10	1B13-IRM-32/29	IRM INSTRUMENT DRY TUBE E	VT-3	R-EVEN	006-117
X2.10	1B13-IRM-32/37	IRM INSTRUMENT DRY TUBE F	VT-3	R-EVEN	006-117
X2.10	1B13-IRM-48/13	IRM INSTRUMENT DRY TUBE G	VT-3	R-EVEN	006-117
X2.10	1B13-IRM-48/53	IRM INSTRUMENT DRY TUBE H	VT-3	R-EVEN	006-117
X1.30	1B13-JPA-P1/P2	JET PUMP NOZZLE TO MIXER ASSEMBLY	VT-3	NS	006-126
X1.30	1B13-JPA-P3/P4	JET PUMP NOZZLE TO MIXER ASSEMBLY	VT-3	R-All	006-126
X1.30	1B13-JPA-P5/P6	JET PUMP NOZZLE TO MIXER ASSEMBLY	VT-3	NS	006-126
X1.30	1B13-JPA-P7/P8	JET PUMP NOZZLE TO MIXER ASSEMBLY	VT-3	NS	006-126
X1.30	1B13-JPA-P9/P10	JET PUMP NOZZLE TO MIXER ASSEMBLY	VT-3	NS	006-126
X1.30	1B13-JPA-P11/P12	JET PUMP NOZZLE TO MIXER ASSEMBLY	VT-3	NS	006-126
X1.30	1B13-JPA-P13/P14	JET PUMP NOZZLE TO MIXER ASSEMBLY	VT-3	R-All	006-126
X1.30	1B13-JPA-P15/P16	JET PUMP NOZZLE TO MIXER ASSEMBLY	VT-3	NS	006-126
X1.30	1B13-JPA-P17/P18	JET PUMP NOZZLE TO MIXER ASSEMBLY	VT-3	NS	006-126
X1.30	1B13-JPA-P19/P20	JET PUMP NOZZLE TO MIXER ASSEMBLY	VT-3	NS	006-126
X1.90	1B13-JPDF-P1/P2	JET PUMP DIFFUSER WELDS (DF-1,2,3A,3B, and AD-2)	EVT1	R14	006-126
X1.90	1B13-JPDF-P3/P4	JET PUMP DIFFUSER WELDS (DF-1,2,3A,3B, and AD-2)	EVT1	R14	006-126
X1.90	1B13-JPDF-P5/P6	JET PUMP DIFFUSER WELDS (DF-1,2,3A,3B, and AD-2)	EVT1	R14	006-126
X1.90	1B13-JPDF-P7/P8	JET PUMP DIFFUSER WELDS (DF-1,2,3A,3B, and AD-2)	EVT1	NS	006-126
X1.90	1B13-JPDF-P9/P10	JET PUMP DIFFUSER WELDS (DF-1,2,3A,3B, and AD-2)	EVT1	NS	006-126
X1.90	1B13-JPDF-P11/P12	JET PUMP DIFFUSER WELDS (DF-1,2,3A,3B, and AD-2)	EVT1	R17	006-126
X1.90	1B13-JPDF-P13/P14	JET PUMP DIFFUSER WELDS (DF-1,2,3A,3B, and AD-2)	EVT1	R17	006-126
X1.90	1B13-JPDF-P15/P16	JET PUMP DIFFUSER WELDS (DF-1,2,3A,3B, and AD-2)	EVT1	R17	006-126
X1.90	1B13-JPDF-P17/P18	JET PUMP DIFFUSER WELDS (DF-1,2,3A,3B, and AD-2)	EVT1	NS	006-126
X1.90	1B13-JPDF-P19/P20	JET PUMP DIFFUSER WELDS (DF-1,2,3A,3B, and AD-2)	EVT1	NS	006-126
X1.10	1B13-JPHDB-P1	JET PUMP HOLD DOWN BEAM	UT	R15	006-115
X1.10	1B13-JPHDB-P2	JET PUMP HOLD DOWN BEAM	UT	R15	006-115
X1.10	1B13-JPHDB-P3	JET PUMP HOLD DOWN BEAM	UT	R15	006-115
X1.10	1B13-JPHDB-P4	JET PUMP HOLD DOWN BEAM	UT	R15	006-115

ITEM NO.	MARK NO.	COMPONENT DESCRIPTION	EXAM METHOD	SCHED.	ISI ISO SS-305-
		EXAMINATION CATEGORY: X-A			
X1.10	1B13-JPHDB-P5	JET PUMP HOLD DOWN BEAM	UT	R15	006-115
X1.10	1B13-JPHDB-P6	JET PUMP HOLD DOWN BEAM	UT	NS+++	006-115
X1.10	1B13-JPHDB-P7	JET PUMP HOLD DOWN BEAM	UT	R15	006-115
X1.10	1B13-JPHDB-P8	JET PUMP HOLD DOWN BEAM	UT	R15	006-115
X1.10	1B13-JPHDB-P9	JET PUMP HOLD DOWN BEAM	UT	R15	006-115
X1.10	1B13-JPHDB-P10	JET PUMP HOLD DOWN BEAM	UT	R15	006-115
X1.10	1B13-JPHDB-P11	JET PUMP HOLD DOWN BEAM	UT	R15	006-115
X1.10	1B13-JPHDB-P12	JET PUMP HOLD DOWN BEAM	UT	R15	006-115
X1.10	1B13-JPHDB-P13	JET PUMP HOLD DOWN BEAM	UT	R15	006-115
X1.10	1B13-JPHDB-P14	JET PUMP HOLD DOWN BEAM	UT	R15	006-115
X1.10	1B13-JPHDB-P15	JET PUMP HOLD DOWN BEAM	UT	R15	006-115
X1.10	1B13-JPHDB-P16	JET PUMP HOLD DOWN BEAM	UT	R15	006-115
X1.10	1B13-JPHDB-P17	JET PUMP HOLD DOWN BEAM	UT	R15	006-115
X1.10	1B13-JPHDB-P18	JET PUMP HOLD DOWN BEAM	UT	R15	006-115
X1.10	1B13-JPHDB-P19	JET PUMP HOLD DOWN BEAM	UT	R15	006-115
X1.10	1B13-JPHDB-P20	JET PUMP HOLD DOWN BEAM	UT	R15	006-115
X1.80	1B13-JPIN-P1/P2	JET PUMP INLET WELDS (IN-1&2)	EVT1	R14	006-126
X1.80	1B13-JPIN-P3/P4	JET PUMP INLET WELDS (IN-1&2)	EVT1	R14	006-126
X1.80	1B13-JPIN-P5/P6	JET PUMP INLET WELDS (IN-1&2)	EVT1	R14	006-126
X1.80	1B13-JPIN-P7/P8	JET PUMP INLET WELDS (IN-1&2)	EVT1	NS	006-126
X1.80	1B13-JPIN-P9/P10	JET PUMP INLET WELDS (IN-1&2)	EVT1	NS	006-126
X1.80	1B13-JPIN-P11/P12	JET PUMP INLET WELDS (IN-1&2)	EVT1	R17	006-126
X1.80	1B13-JPIN-P13/P14	JET PUMP INLET WELDS (IN-1&2)	EVT1	R17	006-126
X1.80	1B13-JPIN-P15/P16	JET PUMP INLET WELDS (IN-1&2)	EVT1	R17	006-126
X1.80	1B13-JPIN-P17/P18	JET PUMP INLET WELDS (IN-1&2)	EVT1	NS	006-126
X1.80	1B13-JPIN-P19/P20	JET PUMP INLET WELDS (IN-1&2)	EVT1	NS	006-126
X1.20	1B13-JPLAW-P01	JET PUMP SENSING LINE ATTACHMENT WELDS	VT-3	R16	006-125
X1.20	1B13-JPLAW-P02	JET PUMP SENSING LINE ATTACHMENT WELDS	VT-3	R16	006-125
X1.20	1B13-JPLAW-P03	JET PUMP SENSING LINE ATTACHMENT WELDS	VT-3	R16	006-125
X1.20	1B13-JPLAW-P04	JET PUMP SENSING LINE ATTACHMENT WELDS	VT-3	R16	006-125
X1.20	1B13-JPLAW-P05	JET PUMP SENSING LINE ATTACHMENT WELDS	VT-3	R16	006-125
X1.20	1B13-JPLAW-P06	JET PUMP SENSING LINE ATTACHMENT WELDS	VT-3	R16	006-125
X1.20	1B13-JPLAW-P07	JET PUMP SENSING LINE ATTACHMENT WELDS	VT-3	R16	006-125
X1.20	1B13-JPLAW-P08	JET PUMP SENSING LINE ATTACHMENT WELDS	VT-3	R16	006-125
X1.20	1B13-JPLAW-P09	JET PUMP SENSING LINE ATTACHMENT WELDS	VT-3	R16	006-125
X1.20	1B13-JPLAW-P10	JET PUMP SENSING LINE ATTACHMENT WELDS	VT-3	R16	006-125
X1.20	1B13-JPLAW-P11	JET PUMP SENSING LINE ATTACHMENT WELDS	VT-3	R16	006-125
X1.20	1B13-JPLAW-P12	JET PUMP SENSING LINE ATTACHMENT WELDS	VT-3	R16	006-125
X1.20	1B13-JPLAW-P13	JET PUMP SENSING LINE ATTACHMENT WELDS	VT-3	R16	006-125
X1.20	1B13-JPLAW-P14	JET PUMP SENSING LINE ATTACHMENT WELDS	VT-3	R16	006-125
X1.20	1B13-JPLAW-P15	JET PUMP SENSING LINE ATTACHMENT WELDS	VT-3	R16	006-125

ITEM NO.	MARK NO.	COMPONENT DESCRIPTION	EXAM METHOD	SCHED.	ISI ISO SS-305-
		EXAMINATION CATEGORY: X-A			
X1.20	1B13-JPLAW-P16	JET PUMP SENSING LINE ATTACHMENT WELDS	VT-3	R16	006-125
X1.20	1B13-JPLAW-P17	JET PUMP SENSING LINE ATTACHMENT WELDS	VT-3	R16	006-125
X1.20	1B13-JPLAW-P18	JET PUMP SENSING LINE ATTACHMENT WELDS	VT-3	R16	006-125
X1.20	1B13-JPLAW-P19	JET PUMP SENSING LINE ATTACHMENT WELDS	VT-3	R16	006-125
X1.20	1B13-JPLAW-P20	JET PUMP SENSING LINE ATTACHMENT WELDS	VT-3	R16	006-125
X1.81	1B13-JPMX-P1/P2	JET PUMP INLET MIXER BARREL TO ADAPTER WELD	EVT1	NS	006-126
X1.81	1B13-JPMX-P3/P4	JET PUMP INLET MIXER BARREL TO ADAPTER WELD	EVT1	NS	006-126
X1.81	1B13-JPMX-P5/P6	JET PUMP INLET MIXER BARREL TO ADAPTER WELD	EVT1	NS	006-126
X1.81	1B13-JPMX-P7/P8	JET PUMP INLET MIXER BARREL TO ADAPTER WELD	EVT1	NS	006-126
X1.81	1B13-JPMX-P9/P10	JET PUMP INLET MIXER BARREL TO ADAPTER WELD	EVT1	NS	006-126
X1.81	1B13-JPMX-P11/P12	JET PUMP INLET MIXER BARREL TO ADAPTER WELD	EVT1	NS	006-126
X1.81	1B13-JPMX-P13/P14	JET PUMP INLET MIXER BARREL TO ADAPTER WELD	EVT1	NS	006-126
X1.81	1B13-JPMX-P15/P16	JET PUMP INLET MIXER BARREL TO ADAPTER WELD	EVT1	NS	006-126
X1.81	1B13-JPMX-P17/P18	JET PUMP INLET MIXER BARREL TO ADAPTER WELD	EVT1	NS	006-126
X1.81	1B13-JPMX-P19/P20	JET PUMP INLET MIXER BARREL TO ADAPTER WELD	EVT1	NS	006-126
X1.40	1B13-JPRB-P1/P2	JET PUMP RISER BRACE WELDS (RB-1&2)	EVT1	R14	006-125
X1.40	1B13-JPRB-P3/P4	JET PUMP RISER BRACE WELDS (RB-1&2)	EVT1	R14	006-125
X1.40	1B13-JPRB-P5/P6	JET PUMP RISER BRACE WELDS (RB-1&2)	EVT1	R14	006-125
X1.40	1B13-JPRB-P7/P8	JET PUMP RISER BRACE WELDS (RB-1&2)	EVT1	NS	006-125
X1.40	1B13-JPRB-P9/P10	JET PUMP RISER BRACE WELDS (RB-1&2)	EVT1	NS	006-125
X1.40	1B13-JPRB-P11/P12	JET PUMP RISER BRACE WELDS (RB-1&2)	EVT1	R17	006-125
X1.40	1B13-JPRB-P13/P14	JET PUMP RISER BRACE WELDS (RB-1&2)	EVT1	R17	006-125
X1.40	1B13-JPRB-P15/P16	JET PUMP RISER BRACE WELDS (RB-1&2)	EVT1	R17	006-125
X1.40	1B13-JPRB-P17/P18	JET PUMP RISER BRACE WELDS (RB-1&2)	EVT1	NS	006-125
X1.40	1B13-JPRB-P19/P20	JET PUMP RISER BRACE WELDS (RB-1&2)	EVT1	NS	006-125
X1.70	1B13-JPREW-P1/P2	JET PUMP RISER ELBOW WELDS (RS-1&2)	EVT1	R15	006-126
X1.70	1B13-JPREW-P3/P4	JET PUMP RISER ELBOW WELDS (RS-1&2)	EVT1	NS	006-126
X1.70	1B13-JPREW-P5/P6	JET PUMP RISER ELBOW WELDS (RS-1&2)	EVT1	NS	006-126
X1.70	1B13-JPREW-P7/P8	JET PUMP RISER ELBOW WELDS (RS-1&2)	EVT1	NS	006-126
X1.70	1B13-JPREW-P9/P10	JET PUMP RISER ELBOW WELDS (RS-1&2)	EVT1	NS	006-126
X1.70	1B13-JPREW-P11/P12	JET PUMP RISER ELBOW WELDS (RS-1&2)	EVT1	NS	006-126
X1.70	1B13-JPREW-P13/P14	JET PUMP RISER ELBOW WELDS (RS-1&2)	EVT1	NS	006-126
X1.70	1B13-JPREW-P15/P16	JET PUMP RISER ELBOW WELDS (RS-1&2)	EVT1	NS	006-126
X1.70	1B13-JPREW-P17/P18	JET PUMP RISER ELBOW WELDS (RS-1&2)	EVT1	R15	006-126
X1.70	1B13-JPREW-P19/P20	JET PUMP RISER ELBOW WELDS (RS-1&2)	EVT1	R15	006-126
X1.71	1B13-JPRS3-P1/P2	JET PUMP RISER PIPE TO TRANSITION PIECE WELD	EVT1	NS	006-126
X1.71	1B13-JPRS3-P3/P4	JET PUMP RISER PIPE TO TRANSITION PIECE WELD	EVT1	NS	006-126
X1.71	1B13-JPRS3-P5/P6	JET PUMP RISER PIPE TO TRANSITION PIECE WELD	EVT1	NS	006-126
X1.71	1B13-JPRS3-P7/P8	JET PUMP RISER PIPE TO TRANSITION PIECE WELD	EVT1	NS	006-126
X1.71	1B13-JPRS3-P9/P10	JET PUMP RISER PIPE TO TRANSITION PIECE WELD	EVT1	NS	006-126
X1.71	1B13-JPRS3-P11/P12	JET PUMP RISER PIPE TO TRANSITION PIECE WELD	EVT1	R15	006-126

ITEM NO.	MARK NO.	COMPONENT DESCRIPTION	EXAM METHOD	SCHED.	ISI ISO SS-305-
		EXAMINATION CATEGORY: X-A			
X1.71	1B13-JPRS3-P13/P14	JET PUMP RISER PIPE TO TRANSITION PIECE WELD	EVT1	R15	006-126
X1.71	1B13-JPRS3-P15/P16	JET PUMP RISER PIPE TO TRANSITION PIECE WELD	EVT1	R15	006-126
X1.71	1B13-JPRS3-P17/P18	JET PUMP RISER PIPE TO TRANSITION PIECE WELD	EVT1	R15	006-126
X1.71	1B13-JPRS3-P19/P20	JET PUMP RISER PIPE TO TRANSITION PIECE WELD	EVT1	R15	006-126
X1.72	1B13-JPRS6-P1/P2	JET PUMP RISER PIPE TO RESTRAINER BRACKET WELDS (RS-6&7)	EVT1	R14	006-126
X1.72	1B13-JPRS6-P3/P4	JET PUMP RISER PIPE TO RESTRAINER BRACKET WELDS (RS-6&7)	EVT1	R14	006-126
X1.72	1B13-JPRS6-P5/P6	JET PUMP RISER PIPE TO RESTRAINER BRACKET WELDS (RS-6&7)	EVT1	R14	006-126
X1.72	1B13-JPRS6-P7/P8	JET PUMP RISER PIPE TO RESTRAINER BRACKET WELDS (RS-6&7)	EVT1	NS	006-126
X1.72	1B13-JPRS6-P9/P10	JET PUMP RISER PIPE TO RESTRAINER BRACKET WELDS (RS-6&7)	EVT1	NS	006-126
X1.72	1B13-JPRS6-P11/P12	JET PUMP RISER PIPE TO RESTRAINER BRACKET WELDS (RS-6&7)	EVT1	R17	006-126
X1.72	1B13-JPRS6-P13/P14	JET PUMP RISER PIPE TO RESTRAINER BRACKET WELDS (RS-6&7)	EVT1	R17	006-126
X1.72	1B13-JPRS6-P15/P16	JET PUMP RISER PIPE TO RESTRAINER BRACKET WELDS (RS-6&7)	EVT1	R17	006-126
X1.72	1B13-JPRS6-P17/P18	JET PUMP RISER PIPE TO RESTRAINER BRACKET WELDS (RS-6&7)	EVT1	NS	006-126
X1.72	1B13-JPRS6-P19/P20	JET PUMP RISER PIPE TO RESTRAINER BRACKET WELDS (RS-6&7)	EVT1	NS	006-126
X1.72	1B13-JPRS8-P1/P2	JET PUMP RISER PIPE TO RISER BRACE YOKE WELDS (RS-8&9)	EVT1	R13	006-125
X1.72	1B13-JPRS8-P3/P4	JET PUMP RISER PIPE TO RISER BRACE YOKE WELDS (RS-8&9)	EVT1	R13	006-125
X1.72	1B13-JPRS8-P5/P6	JET PUMP RISER PIPE TO RISER BRACE YOKE WELDS (RS-8&9)	EVT1	R14	006-125
X1.72	1B13-JPRS8-P7/P8	JET PUMP RISER PIPE TO RISER BRACE YOKE WELDS (RS-8&9)	EVT1	R13	006-125
X1.72	1B13-JPRS8-P9/P10	JET PUMP RISER PIPE TO RISER BRACE YOKE WELDS (RS-8&9)	EVT1	R13	006-125
X1.72	1B13-JPRS8-P11/P12	JET PUMP RISER PIPE TO RISER BRACE YOKE WELDS (RS-8&9)	EVT1	R13	006-125
X1.72	1B13-JPRS8-P13/P14	JET PUMP RISER PIPE TO RISER BRACE YOKE WELDS (RS-8&9)	EVT1	NS	006-125
X1.72	1B13-JPRS8-P15/P16	JET PUMP RISER PIPE TO RISER BRACE YOKE WELDS (RS-8&9)	EVT1	R13	006-125
X1.72	1B13-JPRS8-P17/P18	JET PUMP RISER PIPE TO RISER BRACE YOKE WELDS (RS-8&9)	EVT1	R13	006-125
X1.72	1B13-JPRS8-P19/P20	JET PUMP RISER PIPE TO RISER BRACE YOKE WELDS (RS-8&9)	EVT1	R13	006-125
X1.60	1B13-JPTS-P1/P2	THERMAL SLEEVE TO SAFE-END AND MODIFICATION WELDS	EVT1	NS*	006-126
X1.60	1B13-JPTS-P3/P4	THERMAL SLEEVE TO SAFE-END AND MODIFICATION WELDS	EVT1	NS*	006-126
X1.60	1B13-JPTS-P5/P6	THERMAL SLEEVE TO SAFE-END AND MODIFICATION WELDS	EVT1	NS*	006-126
X1.60	1B13-JPTS-P7/P8	THERMAL SLEEVE TO SAFE-END AND MODIFICATION WELDS	EVT1	NS*	006-126
X1.60	1B13-JPTS-P9/P10	THERMAL SLEEVE TO SAFE-END AND MODIFICATION WELDS	EVT1	NS*	006-126
X1.60	1B13-JPTS-P11/P12	THERMAL SLEEVE TO SAFE-END AND MODIFICATION WELDS	EVT1	NS*	006-126
X1.60	1B13-JPTS-P13/P14	THERMAL SLEEVE TO SAFE-END AND MODIFICATION WELDS	EVT1	NS*	006-126
X1.60	1B13-JPTS-P15/P16	THERMAL SLEEVE TO SAFE-END AND MODIFICATION WELDS	EVT1	NS*	006-126
X1.60	1B13-JPTS-P17/P18	THERMAL SLEEVE TO SAFE-END AND MODIFICATION WELDS	EVT1	NS*	006-126
X1.60	1B13-JPTS-P19/P20	THERMAL SLEEVE TO SAFE-END AND MODIFICATION WELDS	EVT1	NS*	006-126
X1.50	1B13-JPTW-P01	JET PUMP RESTRAINER ADJUSTING SCREW TACK WELDS	VT-3	NS**	006-125
X1.50	1B13-JPTW-P02	JET PUMP RESTRAINER ADJUSTING SCREW TACK WELDS	VT-3	NS**	006-125
X1.50	1B13-JPTW-P03	JET PUMP RESTRAINER ADJUSTING SCREW TACK WELDS	VT-3	NS**	006-125
X1.50	1B13-JPTW-P04	JET PUMP RESTRAINER ADJUSTING SCREW TACK WELDS	VT-3	NS**	006-125
X1.50	1B13-JPTW-P05	JET PUMP RESTRAINER ADJUSTING SCREW TACK WELDS	VT-3	NS**	006-125
X1.50	1B13-JPTW-P06	JET PUMP RESTRAINER ADJUSTING SCREW TACK WELDS	VT-3	NS**	006-125
X1.50	1B13-JPTW-P07	JET PUMP RESTRAINER ADJUSTING SCREW TACK WELDS	VT-3	NS**	006-125

ITEM NO.	MARK NO.	COMPONENT DESCRIPTION	EXAM METHOD	SCHED.	ISI ISO SS-305-
		EXAMINATION CATEGORY: X-A			
X1.50	1B13-JPTW-P08	JET PUMP RESTRAINER ADJUSTING SCREW TACK WELDS	VT-3	NS**	006-125
X1.50	1B13-JPTW-P09	JET PUMP RESTRAINER ADJUSTING SCREW TACK WELDS	VT-3	NS**	006-125
X1.50	1B13-JPTW-P10	JET PUMP RESTRAINER ADJUSTING SCREW TACK WELDS	VT-3	NS**	006-125
X1.50	1B13-JPTW-P11	JET PUMP RESTRAINER ADJUSTING SCREW TACK WELDS	VT-3	NS**	006-125
X1.50	1B13-JPTW-P12	JET PUMP RESTRAINER ADJUSTING SCREW TACK WELDS	VT-3	NS**	006-125
X1.50	1B13-JPTW-P13	JET PUMP RESTRAINER ADJUSTING SCREW TACK WELDS	VT-3	NS**	006-125
X1.50	1B13-JPTW-P14	JET PUMP RESTRAINER ADJUSTING SCREW TACK WELDS	VT-3	NS**	006-125
X1.50	1B13-JPTW-P15	JET PUMP RESTRAINER ADJUSTING SCREW TACK WELDS	VT-3	NS**	006-125
X1.50	1B13-JPTW-P16	JET PUMP RESTRAINER ADJUSTING SCREW TACK WELDS	VT-3	NS**	006-125
X1.50	1B13-JPTW-P17	JET PUMP RESTRAINER ADJUSTING SCREW TACK WELDS	VT-3	NS**	006-125
X1.50	1B13-JPTW-P18	JET PUMP RESTRAINER ADJUSTING SCREW TACK WELDS	VT-3	NS**	006-125
X1.50	1B13-JPTW-P19	JET PUMP RESTRAINER ADJUSTING SCREW TACK WELDS	VT-3	NS**	006-125
X1.50	1B13-JPTW-P20	JET PUMP RESTRAINER ADJUSTING SCREW TACK WELDS	VT-3	NS**	006-125
X1.51	1B13-JPWD-P1/P2	JET PUMP RESTRAINER BRACKET WEDGE BEARING SURFACE	VT-1	R-ALL	006-125
X1.51	1B13-JPWD-P3/P4	JET PUMP RESTRAINER BRACKET WEDGE BEARING SURFACE	VT-1	R-ALL	006-125
X1.51	1B13-JPWD-P5/P6	JET PUMP RESTRAINER BRACKET WEDGE BEARING SURFACE	VT-1	R-ALL	006-125
X1.51	1B13-JPWD-P7/P8	JET PUMP RESTRAINER BRACKET WEDGE BEARING SURFACE	VT-1	R-ALL	006-125
X1.51	1B13-JPWD-P9/P10	JET PUMP RESTRAINER BRACKET WEDGE BEARING SURFACE	VT-1	R-ALL	006-125
X1.51	1B13-JPWD-P11/P12	JET PUMP RESTRAINER BRACKET WEDGE BEARING SURFACE	VT-1	R-ALL	006-125
X1.51	1B13-JPWD-P13/P14	JET PUMP RESTRAINER BRACKET WEDGE BEARING SURFACE	VT-1	R-ALL	006-125
X1.51	1B13-JPWD-P15/P16	JET PUMP RESTRAINER BRACKET WEDGE BEARING SURFACE	VT-1	R-ALL	006-125
X1.51	1B13-JPWD-P17/P18	JET PUMP RESTRAINER BRACKET WEDGE BEARING SURFACE	VT-1	R-ALL	006-125
X1.51	1B13-JPWD-P19/P20	JET PUMP RESTRAINER BRACKET WEDGE BEARING SURFACE	VT-1	R-ALL	006-125
X8.10	1B13-LPCI-A61	LOOP A LPCI COUPLING PIPE WELDS	EVT1	R15	006-124
X8.10	1B13-LPCI-B61	LOOP B LPCI COUPLING PIPE WELDS	EVT1	R17	006-124
X8.10	1B13-LPCI-C61	LOOP C LPCI COUPLING PIPE WELDS	EVT1	R13	006-124
X8.20	1B13-LPCI-AST	LOOP A LPCI COUPLING STRUT WELDS	EVT1	R16	006-124
X8.20	1B13-LPCI-BST	LOOP B LPCI COUPLING STRUT WELDS	EVT1	R17	006-124
X8.20	1B13-LPCI-CST	LOOP C LPCI COUPLING STRUT WELDS	EVT1	R13	006-124
X8.30	1B13-LPCI-A66	LOOP A LPCI SHROUD ATTACHMENT WELD	EVT1	R15	006-124
X8.30	1B13-LPCI-B66	LOOP B LPCI SHROUD ATTACHMENT WELD	EVT1	R17	006-124
X8.30	1B13-LPCI-C66	LOOP C LPCI SHROUD ATTACHMENT WELD	EVT1	R13	006-124
X2.11	1B13-LPRM-SAMP	10% SAMPLE OF LPRM DRY TUBES	VT-3	R-ALL	006-117
X6.10	1B13-RHR/LPCI-D	RHR/LPCI FLOW DEFLECTORS	VT-3	R15	006-124
X4.10	1B13-SD	STEAM DRYER	VT-3	R16	006-119
X4.11	1B13-SD-STRUCT	STEAM DRYER STRUCTURAL	VT-3	R-ALL	006-119
X4.12	1B13-SD-AH1	HOOD TO BANK HORZ END PANEL WELD, TOP	VT-1	NS	006-129
X4.12	1B13-SD-AH2	BANK LWR VERT END PANEL TO BANK BOTTOM PANEL WELD, 0 DEG SIDE	VT-1	NS	006-129
X4.12	1B13-SD-AH2a	BANK LWR VERT END PANEL TO UPR VERT END PANEL WELD, 0 DEG SIDE	VT-1	NS	006-129
X4.12	1B13-SD-AH2b	BANK UPR VERT END PANEL TO BANK HORZ END PANEL WELD, 0 DEG SIDE	VT-1	NS	006-129

ITEM NO.	MARK NO.	COMPONENT DESCRIPTION	EXAM METHOD	SCHED.	ISI ISO SS-305-
		EXAMINATION CATEGORY: X-A			
X4.12	1B13-SD-AH3	HOOD END PLATE TO UPR SUPPORT RING WELD, 0 DEG SIDE	VT-1	NS	006-129
X4.12	1B13-SD-AH4	HOOD TO COVER PLATE WELD	VT-1	NS	006-129
X4.12	1B13-SD-AH5	HOOD END PLATE TO UPR SUPPORT RING WELD, 180 DEG SIDE	VT-1	NS	006-129
X4.12	1B13-SD-AH6	BANK LWR VERT END PANEL TO BANK BOTTOM PANEL WELD, 180 DEG SIDE	VT-1	NS	006-129
X4.12	1B13-SD-AH6a	BANK LWR VERT END PANEL TO UPR VERT END PANEL WELD, 180 DEG SIDE	VT-1	NS	006-129
X4.12	1B13-SD-AH6b	BANK UPR VERT END PANEL TO BANK HORZ END PANEL WELD, 180 DEG SIDE	VT-1	NS	006-129
X4.12	1B13-SD-AHS1	HOOD TO HOOD STIFFENER WELD, 0 DEG SIDE	VT-1	NS	006-129
X4.12	1B13-SD-AHS2	HOOD TO HOOD STIFFENER WELD, 180 DEG SIDE	VT-1	NS	006-129
X4.12	1B13-SD-AV1	BANK VERT END PANELS TO OUTLET PLENUM END PANEL WELD, 0 DEG SIDE	VT-1	NS	006-129
X4.12	1B13-SD-AV2	BANK VERT END PANELS TO HOOD END PLATE WELD, 0 DEG SIDE	VT-1	NS	006-129
X4.12	1B13-SD-AV3	HOOD TO HOOD END PLATE WELD, 0 DEG SIDE	VT-1	NS	006-129
X4.12	1B13-SD-AV4	HOOD TO HOOD END PLATE WELD, 180 DEG SIDE	VT-1	NS	006-129
X4.12	1B13-SD-AV5	BANK VERT END PANELS TO HOOD END PLATE WELD, 180 DEG SIDE	VT-1	NS	006-129
X4.12	1B13-SD-AV6	BANK VERT END PANELS TO OUTLET PLENUM END PANEL WELD, 180 DEG SIDE	VT-1	NS	006-129
X4.12	1B13-SD-BH1	HOOD TO BANK HORZ END PANEL WELD, TOP	VT-1	NS	006-129
X4.12	1B13-SD-BH2	BANK LWR VERT END PANEL TO BANK BOTTOM PANEL WELD, 0 DEG SIDE	VT-1	NS	006-129
X4.12	1B13-SD-BH2a	BANK LWR VERT END PANEL TO UPR VERT END PANEL WELD, 0 DEG SIDE	VT-1	NS	006-129
X4.12	1B13-SD-BH2b	BANK UPR VERT END PANEL TO BANK HORZ END PANEL WELD, 0 DEG SIDE	VT-1	NS	006-129
X4.12	1B13-SD-BH3	HOOD END PLATE TO UPR SUPPORT RING WELD, 0 DEG SIDE	VT-1	NS	006-129
X4.12	1B13-SD-BH4	HOOD TO COVER PLATE WELD	VT-1	NS	006-129
X4.12	1B13-SD-BH5	HOOD END PLATE TO UPR SUPPORT RING WELD, 180 DEG SIDE	VT-1	NS	006-129
X4.12	1B13-SD-BH6	BANK LWR VERT END PANEL TO BANK BOTTOM PANEL WELD, 180 DEG SIDE	VT-1	NS	006-129
X4.12	1B13-SD-BH6a	BANK LWR VERT END PANEL TO UPR VERT END PANEL WELD, 180 DEG SIDE	VT-1	NS	006-129
X4.12	1B13-SD-BH6b	BANK UPR VERT END PANEL TO BANK HORZ END PANEL WELD, 180 DEG SIDE	VT-1	NS	006-129
X4.12	1B13-SD-BHS1	HOOD TO HOOD STIFFENER WELD, 0 DEG SIDE	VT-1	NS	006-129
X4.12	1B13-SD-BHS2	HOOD TO HOOD STIFFENER WELD, MIDDLE	VT-1	NS	006-129
X4.12	1B13-SD-BHS3	HOOD TO HOOD STIFFENER WELD, 180 DEG SIDE	VT-1	NS	006-129
X4.12	1B13-SD-BV1	BANK VERT END PANELS TO OUTLET PLENUM END PANEL WELD, 0 DEG SIDE	VT-1	NS	006-129
X4.12	1B13-SD-BV2	BANK VERT END PANELS TO HOOD END PLATE WELD, 0 DEG SIDE	VT-1	NS	006-129
X4.12	1B13-SD-BV3	HOOD TO HOOD END PLATE WELD, 0 DEG SIDE	VT-1	NS	006-129
X4.12	1B13-SD-BV4	HOOD TO OUTLET PLENUM END PANEL WELD, 0 DEG SIDE	VT-1	NS	006-129
X4.12	1B13-SD-BV5	HOOD TO OUTLET PLENUM END PANEL WELD, 180 DEG SIDE	VT-1	NS	006-129
X4.12	1B13-SD-BV6	HOOD TO HOOD END PLATE WELD, 180 DEG SIDE	VT-1	NS	006-129
X4.12	1B13-SD-BV7	BANK VERT END PANELS TO HOOD END PLATE WELD, 180 DEG SIDE	VT-1	NS	006-129
X4.12	1B13-SD-BV8	BANK VERT END PANELS TO OUTLET PLENUM END PANEL WELD, 180 DEG SIDE	VT-1	NS	006-129
X4.12	1B13-SD-CH1	HOOD TO BANK HORZ END PANEL WELD, TOP	VT-1	NS	006-129
X4.12	1B13-SD-CH2	BANK LWR VERT END PANEL TO BANK BOTTOM PANEL WELD, 0 DEG SIDE	VT-1	NS	006-129
X4.12	1B13-SD-CH2a	BANK LWR VERT END PANEL TO UPR VERT END PANEL WELD, 0 DEG SIDE	VT-1	NS	006-129
X4.12	1B13-SD-CH2b	BANK UPR VERT END PANEL TO BANK HORZ END PANEL WELD, 0 DEG SIDE	VT-1	NS	006-129
X4.12	1B13-SD-CH3	HOOD END PLATE TO UPR SUPPORT RING WELD, 0 DEG SIDE	VT-1	NS	006-129
X4.12	1B13-SD-CH4	HOOD TO COVER PLATE WELD	VT-1	NS	006-129

ITEM NO.	MARK NO.	COMPONENT DESCRIPTION	EXAM METHOD	SCHED.	ISI ISO SS-305-
		EXAMINATION CATEGORY: X-A			
X4.12	1B13-SD-CH5	HOOD END PLATE TO UPR SUPPORT RING WELD, 180 DEG SIDE	VT-1	NS	006-129
X4.12	1B13-SD-CH6	BANK LWR VERT END PANEL TO BANK BOTTOM PANEL WELD, 180 DEG SIDE	VT-1	NS	006-129
X4.12	1B13-SD-CH6a	BANK LWR VERT END PANEL TO UPR VERT END PANEL WELD, 180 DEG SIDE	VT-1	NS	006-129
X4.12	1B13-SD-CH6b	BANK UPR VERT END PANEL TO BANK HORZ END PANEL WELD, 180 DEG SIDE	VT-1	NS	006-129
X4.12	1B13-SD-CHS1	HOOD TO HOOD STIFFENER WELD, 0 DEG SIDE	VT-1	NS	006-129
X4.12	1B13-SD-CHS2	HOOD TO HOOD STIFFENER WELD, MIDDLE	VT-1	NS	006-129
X4.12	1B13-SD-CHS3	HOOD TO HOOD STIFFENER WELD, 180 DEG SIDE	VT-1	NS	006-129
X4.12	1B13-SD-CV1	BANK VERT END PANELS TO OUTLET PLENUM END PANEL WELD, 0 DEG SIDE	VT-1	NS	006-129
X4.12	1B13-SD-CV2	BANK VERT END PANELS TO HOOD END PLATE WELD, 0 DEG SIDE	VT-1	NS	006-129
X4.12	1B13-SD-CV3	HOOD TO HOOD END PLATE WELD, 0 DEG SIDE	VT-1	NS	006-129
X4.12	1B13-SD-CV4	HOOD TO OUTLET PLENUM END PANEL WELD, 0 DEG SIDE	VT-1	NS	006-129
X4.12	1B13-SD-CV5	HOOD TO OUTLET PLENUM END PANEL WELD, 180 DEG SIDE	VT-1	NS	006-129
X4.12	1B13-SD-CV6	HOOD TO HOOD END PLATE WELD, 180 DEG SIDE	VT-1	NS	006-129
X4.12	1B13-SD-CV7	BANK VERT END PANELS TO HOOD END PLATE WELD, 180 DEG SIDE	VT-1	NS	006-129
X4.12	1B13-SD-CV8	BANK VERT END PANELS TO OUTLET PLENUM END PANEL WELD, 180 DEG SIDE	VT-1	NS	006-129
X4.12	1B13-SD-CP-90	COVER PLATE TO UPR SUPPORT RING WELD, 90 DEG SIDE	VT-1	NS	006-128
X4.12	1B13-SD-CP-270	COVER PLATE TO UPR SUPPORT RING WELD, 270 DEG SIDE	VT-1	NS	006-128
X4.12	1B13-SD-DC1-H	DRAIN CHANNEL 1 TO UPR SUPPORT RING HORZ WELD	VT-1	NS	006-128
X4.12	1B13-SD-DC2-H	DRAIN CHANNEL 2 TO UPR SUPPORT RING HORZ WELD	VT-1	NS	006-128
X4.12	1B13-SD-DC3-H	DRAIN CHANNEL 3 TO UPR SUPPORT RING HORZ WELD	VT-1	NS	006-128
X4.12	1B13-SD-DC4-H	DRAIN CHANNEL 4 TO UPR SUPPORT RING HORZ WELD	VT-1	NS	006-128
X4.12	1B13-SD-DC5-H	DRAIN CHANNEL 5 TO UPR SUPPORT RING HORZ WELD	VT-1	NS	006-128
X4.12	1B13-SD-DC6-H	DRAIN CHANNEL 6 TO UPR SUPPORT RING HORZ WELD	VT-1	NS	006-128
X4.12	1B13-SD-DC7-H	DRAIN CHANNEL 7 TO UPR SUPPORT RING HORZ WELD	VT-1	NS	006-128
X4.12	1B13-SD-DC8-H	DRAIN CHANNEL 8 TO UPR SUPPORT RING HORZ WELD	VT-1	NS	006-128
X4.12	1B13-SD-DC-V1	FIRST VERTICAL WELD OF DRAIN CHANNEL 1	VT-1	NS	006-128
X4.12	1B13-SD-DC-V2	SECOND VERTICAL WELD OF DRAIN CHANNEL 1	VT-1	NS	006-128
X4.12	1B13-SD-DC-V3	FIRST VERTICAL WELD OF DRAIN CHANNEL 2	VT-1	NS	006-128
X4.12	1B13-SD-DC-V4	SECOND VERTICAL WELD OF DRAIN CHANNEL 2	VT-1	NS	006-128
X4.12	1B13-SD-DC-V5	FIRST VERTICAL WELD OF DRAIN CHANNEL 3	VT-1	NS	006-128
X4.12	1B13-SD-DC-V6	SECOND VERTICAL WELD OF DRAIN CHANNEL 3	VT-1	NS	006-128
X4.12	1B13-SD-DC-V7	FIRST VERTICAL WELD OF DRAIN CHANNEL 4	VT-1	NS	006-128
X4.12	1B13-SD-DC-V8	SECOND VERTICAL WELD OF DRAIN CHANNEL 4	VT-1	NS	006-128
X4.12	1B13-SD-DC-V9	FIRST VERTICAL WELD OF DRAIN CHANNEL 5	VT-1	NS	006-128
X4.12	1B13-SD-DC-V10	SECOND VERTICAL WELD OF DRAIN CHANNEL 5	VT-1	NS	006-128
X4.12	1B13-SD-DC-V11	FIRST VERTICAL WELD OF DRAIN CHANNEL 6	VT-1	NS	006-128
X4.12	1B13-SD-DC-V12	SECOND VERTICAL WELD OF DRAIN CHANNEL 6	VT-1	NS	006-128
X4.12	1B13-SD-DC-V13	FIRST VERTICAL WELD OF DRAIN CHANNEL 7	VT-1	NS	006-128
X4.12	1B13-SD-DC-V14	SECOND VERTICAL WELD OF DRAIN CHANNEL 7	VT-1	NS	006-128
X4.12	1B13-SD-DC-V15	FIRST VERTICAL WELD OF DRAIN CHANNEL 8	VT-1	NS	006-128
X4.12	1B13-SD-DC-V16	SECOND VERTICAL WELD OF DRAIN CHANNEL 8	VT-1	NS	006-128

ITEM NO.	MARK NO.	COMPONENT DESCRIPTION	EXAM METHOD	SCHED.	ISI ISO SS-305-
		EXAMINATION CATEGORY: X-A			
X4.12	1B13-SD-DH1	HOOD TO BANK HORZ END PANEL WELD, TOP	VT-1	NS	006-129
X4.12	1B13-SD-DH2	BANK LWR VERT END PANEL TO BANK BOTTOM PANEL WELD, 0 DEG SIDE	VT-1	NS	006-129
X4.12	1B13-SD-DH2a	BANK LWR VERT END PANEL TO UPR VERT END PANEL WELD, 0 DEG SIDE	VT-1	NS	006-129
X4.12	1B13-SD-DH2b	BANK UPR VERT END PANEL TO BANK HORZ END PANEL WELD, 0 DEG SIDE	VT-1	NS	006-129
X4.12	1B13-SD-DH3	HOOD END PLATE TO UPR SUPPORT RING WELD, 0 DEG SIDE	VT-1	NS	006-129
X4.12	1B13-SD-DH4	HOOD TO COVER PLATE WELD	VT-1	NS	006-129
X4.12	1B13-SD-DH5	HOOD END PLATE TO UPR SUPPORT RING WELD, 180 DEG SIDE	VT-1	NS	006-129
X4.12	1B13-SD-DH6	BANK LWR VERT END PANEL TO BANK BOTTOM PANEL WELD, 180 DEG SIDE	VT-1	NS	006-129
X4.12	1B13-SD-DH6a	BANK LWR VERT END PANEL TO UPR VERT END PANEL WELD, 180 DEG SIDE	VT-1	NS	006-129
X4.12	1B13-SD-DH6b	BANK UPR VERT END PANEL TO BANK HORZ END PANEL WELD, 180 DEG SIDE	VT-1	NS	006-129
X4.12	1B13-SD-DHS1	HOOD TO HOOD STIFFENER WELD, 0 DEG SIDE	VT-1	NS	006-129
X4.12	1B13-SD-DHS2	HOOD TO HOOD STIFFENER WELD, MIDDLE	VT-1	NS	006-129
X4.12	1B13-SD-DHS3	HOOD TO HOOD STIFFENER WELD, 180 DEG SIDE	VT-1	NS	006-129
X4.12	1B13-SD-DV1	BANK VERT END PANELS TO OUTLET PLENUM END PANEL WELD, 0 DEG SIDE	VT-1	NS	006-129
X4.12	1B13-SD-DV2	BANK VERT END PANELS TO HOOD END PLATE WELD, 0 DEG SIDE	VT-1	NS	006-129
X4.12	1B13-SD-DV3	HOOD TO HOOD END PLATE WELD, 0 DEG SIDE	VT-1	NS	006-129
X4.12	1B13-SD-DV4	HOOD TO OUTLET PLENUM END PANEL WELD, 0 DEG SIDE	VT-1	NS	006-129
X4.12	1B13-SD-DV5	HOOD TO OUTLET PLENUM END PANEL WELD, 180 DEG SIDE	VT-1	NS	006-129
X4.12	1B13-SD-DV6	HOOD TO HOOD END PLATE WELD, 180 DEG SIDE	VT-1	NS	006-129
X4.12	1B13-SD-DV7	BANK VERT END PANELS TO HOOD END PLATE WELD, 180 DEG SIDE	VT-1	NS	006-129
X4.12	1B13-SD-DV8	BANK VERT END PANELS TO OUTLET PLENUM END PANEL WELD, 180 DEG SIDE	VT-1	NS	006-129
X4.12	1B13-SD-EB-30	EARTHQUAKE BLOCK AT 30 DEG TO UPR SUPPORT RING WELDS	VT-1	NS	006-128
X4.12	1B13-SD-EB-90	EARTHQUAKE BLOCK AT 90 DEG TO UPR SUPPORT RING WELDS	VT-1	NS	006-128
X4.12	1B13-SD-EB-150	EARTHQUAKE BLOCK AT 150 DEG TO UPR SUPPORT RING WELDS	VT-1	NS	006-128
X4.12	1B13-SD-EB-210	EARTHQUAKE BLOCK AT 210 DEG TO UPR SUPPORT RING WELDS	VT-1	NS	006-128
X4.12	1B13-SD-EB-270	EARTHQUAKE BLOCK AT 270 DEG TO UPR SUPPORT RING WELDS	VT-1	NS	006-128
X4.12	1B13-SD-EB-330	EARTHQUAKE BLOCK AT 330 DEG TO UPR SUPPORT RING WELDS	VT-1	NS	006-128
X4.12	1B13-SD-EH1	HOOD TO BANK HORZ END PANEL WELD, TOP	VT-1	NS	006-129
X4.12	1B13-SD-EH2	BANK LWR VERT END PANEL TO BANK BOTTOM PANEL WELD, 0 DEG SIDE	VT-1	NS	006-129
X4.12	1B13-SD-EH2a	BANK LWR VERT END PANEL TO UPR VERT END PANEL WELD, 0 DEG SIDE	VT-1	NS	006-129
X4.12	1B13-SD-EH2b	BANK UPR VERT END PANEL TO BANK HORZ END PANEL WELD, 0 DEG SIDE	VT-1	NS	006-129
X4.12	1B13-SD-EH3	HOOD END PLATE TO UPR SUPPORT RING WELD, 0 DEG SIDE	VT-1	NS	006-129
X4.12	1B13-SD-EH4	HOOD TO COVER PLATE WELD	VT-1	NS	006-129
X4.12	1B13-SD-EH5	HOOD END PLATE TO UPR SUPPORT RING WELD, 180 DEG SIDE	VT-1	NS	006-129
X4.12	1B13-SD-EH6	BANK LWR VERT END PANEL TO BANK BOTTOM PANEL WELD, 180 DEG SIDE	VT-1	NS	006-129
X4.12	1B13-SD-EH6a	BANK LWR VERT END PANEL TO UPR VERT END PANEL WELD, 180 DEG SIDE	VT-1	NS	006-129
X4.12	1B13-SD-EH6b	BANK UPR VERT END PANEL TO BANK HORZ END PANEL WELD, 180 DEG SIDE	VT-1	NS	006-129
X4.12	1B13-SD-EHS1	HOOD TO HOOD STIFFENER WELD, 0 DEG SIDE	VT-1	NS	006-129
X4.12	1B13-SD-EHS2	HOOD TO HOOD STIFFENER WELD, 180 DEG SIDE	VT-1	NS	006-129
X4.12	1B13-SD-EV1	BANK VERT END PANELS TO OUTLET PLENUM END PANEL WELD, 0 DEG SIDE	VT-1	NS	006-129
X4.12	1B13-SD-EV2	BANK VERT END PANELS TO HOOD END PLATE WELD, 0 DEG SIDE	VT-1	NS	006-129

ITEM NO.	MARK NO.	COMPONENT DESCRIPTION	EXAM METHOD	SCHED.	ISI ISO SS-305-
		EXAMINATION CATEGORY: X-A			
X4.12	1B13-SD-EV3	HOOD TO HOOD END PLATE WELD, 0 DEG SIDE	VT-1	NS	006-129
X4.12	1B13-SD-EV4	HOOD TO HOOD END PLATE WELD, 180 DEG SIDE	VT-1	NS	006-129
X4.12	1B13-SD-EV5	BANK VERT END PANELS TO HOOD END PLATE WELD, 180 DEG SIDE	VT-1	NS	006-129
X4.12	1B13-SD-EV6	BANK VERT END PANELS TO OUTLET PLENUM END PANEL WELD, 180 DEG SIDE	VT-1	NS	006-129
X4.12	1B13-SD-HDA-B	A HOLD-DOWN ASSEMBLY UPR BLOCK	VT-1	NS	006-128
X4.12	1B13-SD-HDA-H	A HOLD-DOWN C-CHANNEL TO UPR SUPPORT RING WELD	VT-1	NS	006-128
X4.12	1B13-SD-HDA-S	A HOLD-DOWN STUD	VT-1	NS	006-128
X4.12	1B13-SD-HDA-V1	A HOLD-DOWN C-CHANNEL TO OUTLET PLENUM END PANEL WELD, 90 DEG SIDE	VT-1	NS	006-128
X4.12	1B13-SD-HDA-V2	A HOLD-DOWN C-CHANNEL TO OUTLET PLENUM END PANEL WELD, 270 DEG SIDE	VT-1	NS	006-128
X4.12	1B13-SD-HDB-B	B HOLD-DOWN ASSEMBLY UPR BLOCK	VT-1	NS	006-128
X4.12	1B13-SD-HDB-H	B HOLD-DOWN C-CHANNEL TO UPR SUPPORT RING WELD	VT-1	NS	006-128
X4.12	1B13-SD-HDB-S	B HOLD-DOWN STUD	VT-1	NS	006-128
X4.12	1B13-SD-HDB-V1	B HOLD-DOWN C-CHANNEL TO OUTLET PLENUM END PANEL WELD, 90 DEG SIDE	VT-1	NS	006-128
X4.12	1B13-SD-HDB-V2	B HOLD-DOWN C-CHANNEL TO OUTLET PLENUM END PANEL WELD, 270 DEG SIDE	VT-1	NS	006-128
X4.12	1B13-SD-LA1	LIFTING ROD TO UPR SUPPORT RING WELD	VT-1	NS	006-130
X4.12	1B13-SD-LA2a	LWR BRACE TO BANK A END PANEL WELD, TOP & BOTTOM	VT-1	NS	006-130
X4.12	1B13-SD-LA2b	LWR BRACE PLATE TO PLATE WELD, TOP & BOTTOM	VT-1	NS	006-130
X4.12	1B13-SD-LA3a	UPR BRACE TO BANK A END PANEL WELD, TOP & BOTTOM	VT-1	NS	006-130
X4.12	1B13-SD-LA3b	UPR BRACE PLATE TO PLATE WELD, TOP & BOTTOM	VT-1	NS	006-130
X4.12	1B13-SD-LA4	LIFTING ROD TO LIFTING EYE BARREL TACK WELDS	VT-1	R13	006-130
X4.12	1B13-SD-LA5	LIFTING ROD EYE BARREL TO LIFTING EYE WELDS, BOTH SIDES	VT-1	NS	006-130
X4.12	1B13-SD-LB1	LIFTING ROD TO UPR SUPPORT RING WELD	VT-1	NS	006-130
X4.12	1B13-SD-LB2a	LWR BRACE TO BANK A END PANEL WELD, TOP & BOTTOM	VT-1	NS	006-130
X4.12	1B13-SD-LB2b	LWR BRACE PLATE TO PLATE WELD, TOP & BOTTOM	VT-1	NS	006-130
X4.12	1B13-SD-LB3a	UPR BRACE TO BANK A END PANEL WELD, TOP & BOTTOM	VT-1	R13	006-130
X4.12	1B13-SD-LB3b	UPR BRACE PLATE TO PLATE WELD, TOP & BOTTOM	VT-1	NS	006-130
X4.12	1B13-SD-LB4	LIFTING ROD TO LIFTING EYE BARREL TACK WELDS	VT-1	NS	006-130
X4.12	1B13-SD-LB5	LIFTING ROD EYE BARREL TO LIFTING EYE WELDS, BOTH SIDES	VT-1	NS	006-130
X4.12	1B13-SD-LC1	LIFTING ROD TO UPR SUPPORT RING WELD	VT-1	NS	006-130
X4.12	1B13-SD-LC2a	LWR BRACE TO BANK A END PANEL WELD, TOP & BOTTOM	VT-1	NS	006-130
X4.12	1B13-SD-LC2b	LWR BRACE PLATE TO PLATE WELD, TOP & BOTTOM	VT-1	NS	006-130
X4.12	1B13-SD-LC3a	UPR BRACE TO BANK A END PANEL WELD, TOP & BOTTOM	VT-1	NS	006-130
X4.12	1B13-SD-LC3b	UPR BRACE PLATE TO PLATE WELD, TOP & BOTTOM	VT-1	NS	006-130
X4.12	1B13-SD-LC4	LIFTING ROD TO LIFTING EYE BARREL TACK WELDS	VT-1	NS	006-130
X4.12	1B13-SD-LC5	LIFTING ROD EYE BARREL TO LIFTING EYE WELDS, BOTH SIDES	VT-1	NS	006-130
X4.12	1B13-SD-LD1	LIFTING ROD TO UPR SUPPORT RING WELD	VT-1	NS	006-130
X4.12	1B13-SD-LD2a	LWR BRACE TO BANK A END PANEL WELD, TOP & BOTTOM	VT-1	NS	006-130
X4.12	1B13-SD-LD2b	LWR BRACE PLATE TO PLATE WELD, TOP & BOTTOM	VT-1	NS	006-130
X4.12	1B13-SD-LD3a	UPR BRACE TO BANK A END PANEL WELD, TOP & BOTTOM	VT-1	NS	006-130
X4.12	1B13-SD-LD3b	UPR BRACE PLATE TO PLATE WELD, TOP & BOTTOM	VT-1	NS	006-130

ITEM NO.	MARK NO.	COMPONENT DESCRIPTION	EXAM METHOD	SCHED.	ISI ISO SS-305-
		EXAMINATION CATEGORY: X-A			
X4.12	1B13-SD-LD4	LIFTING ROD TO LIFTING EYE BARREL TACK WELDS	VT-1	R13	006-130
X4.12	1B13-SD-LD5	LIFTING ROD EYE BARREL TO LIFTING EYE WELDS, BOTH SIDES	VT-1	NS	006-130
X4.12	1B13-SD-LG-0	LWR GUIDE TO LWR SUPPORT RING WELDS, 0 DEG SIDE	VT-1	NS	006-128
X4.12	1B13-SD-LG-180	LWR GUIDE TO LWR SUPPORT RING WELDS, 180 DEG SIDE	VT-1	NS	006-128
X4.12	1B13-SD-MC	MANWAY COVER WELD, 270 DEG SIDE	VT-1	NS	006-128
X4.12	1B13-SD-SKA	SKIRT ACCESS COVER PLATES TO SKIRT WELDS	VT-1	NS	006-128
X4.12	1B13-SD-SKH	SKIRT TO LWR SUPPORT RING HORZ WELD	VT-1	NS	006-128
X4.12	1B13-SD-SKV	SKIRT VERTICAL WELD SEAMS	VT-1	NS	006-128
X4.12	1B13-SD-TB1	TIE BAR 1 AND ITS BANK ATTACHMENT WELDS	VT-1	NS	006-128
X4.12	1B13-SD-TB2	TIE BAR 2 AND ITS BANK ATTACHMENT WELDS	VT-1	NS	006-128
X4.12	1B13-SD-TB3	TIE BAR 3 AND ITS BANK ATTACHMENT WELDS	VT-1	NS	006-128
X4.12	1B13-SD-TB4	TIE BAR 4 AND ITS BANK ATTACHMENT WELDS	VT-1	NS	006-128
X4.12	1B13-SD-TB5	TIE BAR 5 AND ITS BANK ATTACHMENT WELDS	VT-1	NS	006-128
X4.12	1B13-SD-TB6	TIE BAR 6 AND ITS BANK ATTACHMENT WELDS	VT-1	NS	006-128
X4.12	1B13-SD-TB7	TIE BAR 7 AND ITS BANK ATTACHMENT WELDS	VT-1	NS	006-128
X4.12	1B13-SD-TB8	TIE BAR 8 AND ITS BANK ATTACHMENT WELDS	VT-1	NS	006-128
X4.12	1B13-SD-TB9	TIE BAR 9 AND ITS BANK ATTACHMENT WELDS	VT-1	NS	006-128
X4.12	1B13-SD-TB10	TIE BAR 10 AND ITS BANK ATTACHMENT WELDS	VT-1	NS	006-128
X4.12	1B13-SD-TB11	TIE BAR 11 AND ITS BANK ATTACHMENT WELDS	VT-1	NS	006-128
X4.12	1B13-SD-TB12	TIE BAR 12 AND ITS BANK ATTACHMENT WELDS	VT-1	NS	006-128
X4.12	1B13-SD-TB13	TIE BAR 13 AND ITS BANK ATTACHMENT WELDS	VT-1	NS	006-128
X4.12	1B13-SD-TB14	TIE BAR 14 AND ITS BANK ATTACHMENT WELDS	VT-1	NS	006-128
X4.12	1B13-SD-TB15	TIE BAR 15 AND ITS BANK ATTACHMENT WELDS	VT-1	NS	006-128
X4.12	1B13-SD-TB16	TIE BAR 16 AND ITS BANK ATTACHMENT WELDS	VT-1	NS	006-128
X4.12	1B13-SD-TB17	TIE BAR 17 AND ITS BANK ATTACHMENT WELDS	VT-1	NS	006-128
X4.12	1B13-SD-TB18	TIE BAR 18 AND ITS BANK ATTACHMENT WELDS	VT-1	NS	006-128
X4.12	1B13-SD-TB19	TIE BAR 19 AND ITS BANK ATTACHMENT WELDS	VT-1	NS	006-128
X4.12	1B13-SD-TB20	TIE BAR 20 AND ITS BANK ATTACHMENT WELDS	VT-1	NS	006-128
X4.12	1B13-SD-TB21	TIE BAR 21 AND ITS BANK ATTACHMENT WELDS	VT-1	NS	006-128
X4.12	1B13-SD-TB22	TIE BAR 22 AND ITS BANK ATTACHMENT WELDS	VT-1	NS	006-128
X4.12	1B13-SD-TB23	TIE BAR 23 AND ITS BANK ATTACHMENT WELDS	VT-1	NS	006-128
X4.12	1B13-SD-TB24	TIE BAR 24 AND ITS BANK ATTACHMENT WELDS	VT-1	NS	006-128
X4.12	1B13-SD-TB25	TIE BAR 25 AND ITS BANK ATTACHMENT WELDS	VT-1	NS	006-128
X4.12	1B13-SD-TB26	TIE BAR 26 AND ITS BANK ATTACHMENT WELDS	VT-1	NS	006-128
X4.12	1B13-SD-TB27	TIE BAR 27 AND ITS BANK ATTACHMENT WELDS	VT-1	NS	006-128
X4.12	1B13-SD-TB28	TIE BAR 28 AND ITS BANK ATTACHMENT WELDS	VT-1	NS	006-128
X4.12	1B13-SD-TB29	TIE BAR 29 AND ITS BANK ATTACHMENT WELDS	VT-1	NS	006-128
X4.12	1B13-SD-TB30	TIE BAR 30 AND ITS BANK ATTACHMENT WELDS	VT-1	NS	006-128
X4.12	1B13-SD-TB31	TIE BAR 31 AND ITS BANK ATTACHMENT WELDS	VT-1	NS	006-128
X4.12	1B13-SD-TB32	TIE BAR 32 AND ITS BANK ATTACHMENT WELDS	VT-1	NS	006-128
X4.12	1B13-SD-USR	UPR SUPPORT RING ACCESSIBLE SURFACES, INCL RING TO SKIRT WELD	VT-1	NS	006-128

ITEM NO.	MARK NO.	COMPONENT DESCRIPTION	EXAM METHOD	SCHED.	ISI ISO SS-305-
		EXAMINATION CATEGORY: X-A			
X6.12	1B13-SDSB-WA @	STEAM DRYER SUPPORT BRACKET WELDED ATTACHMENTS	EVT1	NS+	006-130
X6.14	1B13-SHSAM	SHROUD HEAD STUD ASSEMBLY MODIFICATIONS	VT-3	R-ALL++	006-001
X2.10	1B13-SRM-16/21	SRM INSTRUMENT DRY TUBE B	VT-3	R-EVEN	006-117
X2.10	1B13-SRM-16/45	SRM INSTRUMENT DRY TUBE A	VT-3	R-ODD	006-117
X2.10	1B13-SRM-40/21	SRM INSTRUMENT DRY TUBE C	VT-3	R-ODD	006-117
X2.10	1B13-SRM-40/45	SRM INSTRUMENT DRY TUBE D	VT-3	R-EVEN	006-117
X5.30	1B13-SSAHC	SHROUD SUPPORT ACCESS HOLE COVER WELD	EVT1	R14,17	006-121
X6.10	1B13-SSH-1	SURVEILLANCE SAMPLE HOLDER/SPECIMEN	VT-3	R16	006-127
X6.10	1B13-SSH-2	SURVEILLANCE SAMPLE HOLDER/SPECIMEN	VT-3	R16	006-127
X6.10	1B13-SSH-3	SURVEILLANCE SAMPLE HOLDER/SPECIMEN	VT-3	R16	006-127
X5.40	1B13-SSL	SHROUD SUPPORT LEGS (H-10 TO H-12)	EVT-1	NS+*	006-121
X6.15	1B13-UPPER-INT	REACTOR VESSEL INTERIOR FROM FW SPARGER UP TO FLANGE	VT-3	R-ALL	006-001
X6.11	1B13-VIB	ABANDONED VIBRATION MONITORING INSTRUMENTATION	VT-1	R13	006-001

\+ These Category X-A examinations are scheduled for examination in Section 2.0 under Category B-N-2.
* Inaccessible for current examination technology. BWRVIP is working on developing a technique to examine these welds. Once the technique is developed, the exams are to be scheduled.
** In accordance with CR 03-04880, the set screw tack welds and gaps are no longer required to be examined every refueling outage. Starting in RFO10, they will only require examination if the corresponding restrainer bracket wedge assembly shows indications of wear or vibratory damage.
+* To be performed only if access is provided through jet pump disassembly or other means.
++ Perform every outage except SHSAM #2 and #8 which have been modified by ECP 06-0021.
+++ Jet Pump Beam #6 is a group 3 beam, which is not required for examination until 1R21.

		EXAMINATION CATEGORY: X-B			
X10.10	1B21-0015 @	25″ VALVE F022C TO PENETRATION P122 PROCESS PIPE	UT	NS	605-103
X10.10	1B21-0016 @	26″ PENETRATION P122 PROCESS PIPE TO VALVE F028C	UT	NS	605-109
X10.10	1B21-0017 @	26″ VALVE F028C TO PIPE	UT	NS	605-109
X10.10	1B21-0018 @	26″ PIPE TO 28″ PIPE	UT	NS**	605-109
X10.10	1B21-0050 @	26″ VALVE F022D TO PENETRATION P415 PROCESS PIPE	UT	NS	605-104
X10.10	1B21-0051 @	26″ PENETRATION P415 PROCESS PIPE TO VALVE F028D	UT	NS	605-110
X10.10	1B21-0052 @	26″ VALVE F028D TO PIPE	UT	NS	605-110
X10.10	1B21-0053 @	26″ PIPE TO 28″ PIPE	UT	NS	605-110
X10.10	1B21-0092 @	26″ VALVE F022B TO PENETRATION P416 PROCESS PIPE	UT	NS	605-102
X10.10	1B21-0093 @	26″ PENETRATION P416 PROCESS PIPE TO VALVE F028D	UT	NS	605-108
X10.10	1B21-0094 @	26″ VALVE F028B TO PIPE	UT	NS	605-108
X10.10	1B21-0095 @	26″ PIPE TO 28″ PIPE	UT	NS	605-108
X10.10	1B21-0128 @	26″ VALVE F022A TO PENETRATION P124 PROCESS PIPE	UT	NS	605-101
X10.10	1B21-0129 @	26″ PENETRATION P124 PROCESS PIPE TO VALVE F028A	UT	NS*	605-107
X10.10	1B21-0130 @	26″ VALVE F028A TO PIPE	UT	NS	605-107
X10.10	1B21-0131 @	26″ PIPE TO 28″ PIPE	UT	NS	605-107

ITEM NO.	MARK NO.	COMPONENT DESCRIPTION	EXAM METHOD	SCHED.	ISI ISO SS-305-
		EXAMINATION CATEGORY: X-B			
X10.11	1C11-0083	2 1/2" PIPE TO VALVE F122	UT	NS	871-105
X10.11	1C11-0084	2 1/2" ELBOW TO PIPE	UT	NS	871-105
X10.11	1C11-0085	2 1/2" PIPE TO ELBOW	UT	NS	871-105
X10.11	1C11-0086	2 1/2" ELBOW TO PIPE	UT	NS	871-105
X10.11	1C11-0087	2 1/2" PIPE TO ELBOW	UT	NS	871-105
X10.11	1C11-0088	2 1/2" ELBOW TO PIPE	UT	NS	871-105
X10.11	1C11-0089	2 1/2" PIPE TO ELBOW	UT	NS	871-105
X10.11	1C11-0090	2 1/2" VALVE F083 TO PIPE	UT	NS	871-105
X10.11	1C11-0091	2 1/2" PIPE TO VALVE F083	UT	NS	871-105
X10.11	1C11-0092	2 1/2" PIPE TO ELBOW	UT	NS	871-105
X10.10	1E12-0333 @	12" VALVE F053A TO PIPE	UT	NS	642-119
X10.10	1E12-0334 @	12" PIPE TO ELBOW	UT	NS	642-119
X10.10	1E12-0335 @	12" ELBOW TO PIPE	UT	NS	642-119
X10.10	1E12-0336 @	12" PIPE TO VALVE F050A	UT	NS	642-120
X10.10	1E12-0337 @	12" VALVE F050A TO PIPE	UT	NS	642-120
X10.10	1E12-0338 @	12" PIPE TO 12" X 14" REDUCING SLEEVE	UT	NS	642-120
X10.10	1E12-0339 @	12" PIPE TO 12" X 6" SWEEPOLET RWCU INTERTIE	UT	NS	642-120
X10.10	1E12-0580 @	12" VALVE F053B TO PIPE	UT	NS	642-132
X10.10	1E12-0581 @	12" PIPE TO ELBOW	UT	NS	642-132
X10.10	1E12-0582 @	12" ELBOW TO PIPE	UT	NS	642-132
X10.10	1E12-0583 @	12" PIPE TO VALVE F050B	UT	NS	642-131
X10.10	1E12-0584 @	12" VALVE F050B TO PIPE	UT	NS	642-131
X10.10	1E12-0585 @	12" PIPE TO 12" X 6" SWEEPOLET RWCU INTERTIE	UT	NS	642-131
X10.10	1E12-0586 @	12" PIPE TO 12" X 14" REDUCING SLEEVE	UT	NS	642-131
X10.11	1E32-0196 @	2" COUPLING ON VALVE F028B TO PIPE	UT	NS	605-108
X10.11	1E32-0197 @	2" PIPE TO ELBOW	UT	NS	605-108
X10.11	1E32-0198 @	2" ELBOW TO 2" X 3/4" REDUCER	UT	NS	605-108
1E32-0199 TO 0211 DELETED IAW DCP 96-0044					
X10.11	1E32-0215 @	2" COUPLING ON VALVE F028A TO PIPE	UT	NS	605-107
X10.11	1E32-0216 @	2" PIPE TO ELBOW	UT	NS	605-107
X10.11	1E32-0217 @	2" ELBOW TO 2" X 3/4" REDUCER	UT	NS	605-107
1E32-0218 TO 0230 DELETED IAW DCP 96-0044					
X10.11	1E32-0234 @	2" COUPLING ON VALVE F028D TO PIPE	UT	NS	605-110
X10.11	1E32-0235 @	2" PIPE TO ELBOW	UT	NS	605-110
X10.11	1E32-0236 @	2" ELBOW TO 2" X 3/4" REDUCER	UT	NS	605-110

ITEM NO.	MARK NO.	COMPONENT DESCRIPTION	EXAM METHOD	SCHED.	ISI ISO SS-305-
		EXAMINATION CATEGORY: X-B			
1E32-0237 TO 0249 DELETED IAW DCP 96-0044					
X10.11	1E32-0252 @	2″ COUPLING ON VALVE F028C TO PIPE	UT	NS	605-109
X10.11	1E32-0253 @	2″ PIPE TO ELBOW	UT	NS	605-109
X10.11	1E32-0254 @	2″ ELBOW TO 2″ X 3/4″ REDUCER	UT	NS	605-109
1E32-0255 TO 0267 DELETED IAW DCP 96-0044					
X10.10	1E51-0120 @	10″ PIPE TO VALVE F064	UT	NS	632-101
X10.10	1E51-0121 @	10″ PENETRATION P422 PROCESS PIPE TO PIPE	UT	NS*	632-101
X10.10	1E51-0122 @	10″ PIPE TO PENETRATION P422 PROCESS PIPE	UT	NS	632-101
X10.10	1E51-0123 @	10″ VALVE F063 TO PIPE	UT	NS	632-101
X10.10	1E51-0124 @	10″ PIPE TO VALVE F063	UT	NS	632-101
X10.10	1G33-0060 @	6″ PIPE TO VALVE F001	UT	NS	671-103
X10.10	1G33-0061 @	6″ VALVE F001 TO PIPE	UT	NS	671-103
X10.10	1G33-0062 @	6″ PIPE TO PENETRATION P131 PROCESS PIPE	UT	NS	671-103
X10.10	1G33-0063 @	6″ PENETRATION P131 PROCESS PIPE TO PIPE	UT	NS*	671-104
X10.10	1G33-0064 @	6″ PIPE TO VALVE F004	UT	NS	671-104
X10.10	1G33-0064A	6″ VALVE F004 TO ELBOW	UT	NS	671-104
X10.10	1G33-0064B	6″ ELBOW TO PIPE	UT	NS	671-104
X10.10	1G33-0064C	6″ PIPE TO ELBOW	UT	NS	671-104
X10.10	1G33-0064D	6″ ELBOW TO PIPE	UT	NS	671-104
X10.10	1G33-0064E	6″ PIPE TO ELBOW	UT	NS	671-104
X10.10	1G33-0064F	6″ ELBOW TO PIPE	UT	3	671-104
X10.10	1G33-0114 @	6″ VALVE F040 TO PENETRATION P132 PROCESS PIPE	UT	NS	672-102
X10.10	1G33-0115 @	6″ PENETRATION P132 PROCESS PIPE TO VALVE F039	UT	NS	672-102
X10.10	1G33-0116 @	6″ VALVE F039 TO PIPE	UT	NS	672-102
X10.10	1G33-0117 @	6″ PIPE TO FLANGE FE N040	UT	NS	672-102
X10.10	1G33-0118 @	6″ FLANGE FE N040 TO PIPE	UT	NS	672-102
X10.10	1G33-0119 @	6″ PIPE TO ELBOW	UT	NS	672-102
X10.10	1G33-0120 @	6″ ELBOW TO PIPE	UT	NS	672-102
X10.10	1G33-0121 @	PIPE TO 6″ X 6″ X 6″ TEE	UT	NS	672-101
X10.10	1G33-0122 @	6″ X 6″ X 6″ TEE TO VALVE F051A	UT	NS	672-101
X10.10	1G33-0123 @	6″ VALVE F051A TO PIPE	UT	NS	672-101
X10.10	1G33-0124 @	6″ PIPE TO ELBOW	UT	NS	672-101
X10.10	1G33-0125 @	6″ ELBOW TO PIPE	UT	NS	672-101
X10.10	1G33-0126 @	6″ PIPE TO VALVE F052A	UT	NS	672-101
X10.10	1G33-0127 @	6″ VALVE F052A TO PIPE	UT	NS	672-101

ITEM NO.	MARK NO.	COMPONENT DESCRIPTION	EXAM METHOD	SCHED.	ISI ISO SS-305-
		EXAMINATION CATEGORY: X-B			
X10.10	1G33-0128 @	6" PIPE TO ELBOW	UT	NS	672-101
X10.10	1G33-0129 @	6" ELBOW TO PIPE	UT	NS	672-101
X10.10	1G33-0130 @	6" PIPE TO ELBOW	UT	NS	672-101
X10.10	1G33-0131 @	6" ELBOW TO WELDOLET	UT	NS	672-101
X10.10	1G33-0132 @	6" TEE TO PIPE	UT	NS	672-101
X10.10	1G33-0132A @	6" PIPE TO PIPE	UT	NS	672-101
X10.10	1G33-0133 @	6" PIPE TO VALVE F051B	UT	NS	672-101
X10.10	1G33-0134 @	6" VALVE F051B TO ELBOW	UT	NS	672-101
X10.10	1G33-0135 @	6" ELBOW TO PIPE	UT	NS	672-101
X10.10	1G33-0136 @	6" PIPE TO ELBOW	UT	NS	672-101
X10.10	1G33-0137 @	6" ELBOW TO PIPE	UT	NS	672-101
X10.10	1G33-0138 @	6" PIPE TO VALVE F052B	UT	NS	672-101
X10.10	1G33-0139 @	6" VALVE F052B TO PIPE	UT	NS	672-101
X10.10	1G33-0140 @	6" PIPE TO ELBOW	UT	NS	672-101
X10.10	1G33-0141 @	6" ELBOW TO PIPE	UT	NS	672-101
X10.10	1G33-0142 @	6" PIPE TO ELBOW	UT	NS	672-101
X10.10	1G33-0143 @	6" ELBOW TO WELDOLET	UT	NS	672-101
X10.10	1G33-0158	4" PIPE TO VALVE F053	UT	NS	672-103
X10.10	1G33-0159	4" VALVE F054 TO 4" PIPE	UT	NS	672-103
X10.10	1G33-0160	4" VALVE F028 TO 4" PIPE	UT	NS	672-103
X10.10	1G33-0161	4" PIPE TO VALVE F034	UT	NS	672-103
X10.11	1N22-0026 @	VALVE F022C TO 2" PIPE	UT	NS	121-102
X10.11	1N22-0027 @	2" PIPE TO ELBOW	UT	NS	121-102
X10.11	1N22-0028 @	2" ELBOW TO PIPE	UT	NS	121-102
X10.11	1N22-0029 @	2" PIPE TO ELBOW	UT	NS	121-102
X10.11	1N22-0030 @	2" ELBOW TO PIPE	UT	NS	121-102
X10.11	1N22-0030A @	2" PIPE TO COUPLING	UT	NS	121-102
X10.11	1N22-0030B @	2" COUPLING TO PIPE	UT	NS	121-102
X10.11	1N22-0031 @	2" PIPE TO ELBOW	UT	NS	121-102
X10.11	1N22-0031A @	2" TEE TO PIPE	UT	NS	121-102
X10.11	1N22-0031B @	2" PIPE TO TEE	UT	NS	121-102
X10.11	1N22-0031C @	2" PIPE TO COUPLING	UT	NS	121-102
X10.11	1N22-0032 @	2" ELBOW TO PIPE	UT	NS	121-102
X10.11	1N22-0033 @	2" PIPE TO ELBOW	UT	NS	121-102
X10.11	1N22-0034 @	2" ELBOW TO PIPE	UT	NS	121-102
X10.11	1N22-0035 @	2" PIPE TO ELBOW	UT	NS	121-102
X10.11	1N22-0036 @	2" ELBOW TO PIPE	UT	NS	121-102
X10.11	1N22-0037 @	2" PIPE TO 2" X 3" X 3" TEE	UT	NS*	121-102
X10.11	1N22-0059 @	2" COUPLING ON VALVE F022D TO PIPE	UT	NS	121-101

ITEM NO.	MARK NO.	COMPONENT DESCRIPTION	EXAM METHOD	SCHED.	ISI ISO SS-305-
		EXAMINATION CATEGORY: X-B			
X10.11	1N22-0060 @	2" PIPE TO ELBOW	UT	NS	121-101
X10.11	1N22-0061 @	2" ELBOW TO PIPE	UT	NS	121-101
X10.11	1N22-0062 @	2" PIPE TO ELBOW	UT	3	121-101
X10.11	1N22-0063 @	2" ELBOW TO PIPE	UT	3	121-101
X10.11	1N22-0064 @	2" PIPE TO ELBOW	UT	NS	121-101
X10.11	1N22-0065 @	2" ELBOW TO PIPE	UT	NS	121-101
X10.11	1N22-0066 @	2" PIPE TO 2" X 3" REDUCER	UT	NS	121-101
X10.11	1N22-0067 @	2" X 3" REDUCER TO PIPE	UT	NS*	121-101
X10.11	1N22-0068 @	3" PIPE TO 3" X 3" X 2" TEE	UT	NS*	121-101
X10.11	1N22-0069 @	3" X 3" X 2" TEE TO 3" PIPE	UT	NS	121-101
X10.11	1N22-0070 @	3" PIPE TO 3" X 3" X 2" TEE	UT	NS	121-103
X10.11	1N22-0071 @	3" X 3" X 2" TEE TO 3" PIPE	UT	NS	121-103
X10.11	1N22-0072 @	3" PIPE TO 3" X 3" X 2" TEE	UT	NS	121-103
X10.11	1N22-0073 @	3" X 3" X 2" TEE TO 3" PIPE	UT	NS*	121-103
X10.11	1N22-0074 @	3" PIPE TO VALVE F016	UT	NS	121-103
X10.11	1N22-0075 @	3" VALVE F016 TO PENETRATION P423	UT	NS	121-103
X10.11	1N22-0076 @	PENETRATION P423 TO 3" PIPE	UT	NS	121-103
X10.11	1N22-0077 @	3" PIPE TO VALVE F019	UT	NS	121-103
X10.11	1N22-0103 @	2" COUPLING ON VALVE F022B	UT	NS	121-101
X10.11	1N22-0104 @	2" PIPE TO ELBOW	UT	NS	121-101
X10.11	1N22-0105 @	2" ELBOW TO PIPE	UT	NS	121-101
X10.11	1N22-0106 @	2" PIPE TO ELBOW	UT	NS*	121-101
X10.11	1N22-0107 @	2" ELBOW TO PIPE	UT	NS*	121-101
X10.11	1N22-0108 @	2" PIPE TO ELBOW	UT	NS	121-101
X10.11	1N22-0108A @	2" ELBOW TO PIPE	UT	NS	121-101
X10.11	1N22-0108B @	2" PIPE TO ELBOW	UT	NS	121-101
X10.11	1N22-0109 @	2" ELBOW TO PIPE	UT	NS	121-101
X10.11	1N22-0109A @	2" PIPE TO COUPLING	UT	NS	121-101
X10.11	1N22-0109B @	2" COUPLING TO PIPE	UT	NS	121-101
X10.11	1N22-0110 @	2" PIPE TO ELBOW	UT	NS	121-101
X10.11	1N22-0111 @	2" ELBOW TO PIPE	UT	NS	121-101
X10.11	1N22-0112 @	2" PIPE TO ELBOW	UT	NS	121-101
X10.11	1N22-0113 @	2" ELBOW TO PIPE	UT	NS	121-101
X10.11	1N22-0114 @	2" PIPE TO ELBOW	UT	NS	121-101
X10.11	1N22-0115 @	2" ELBOW TO PIPE	UT	NS	121-101
X10.11	1N22-0116 @	2" PIPE TO 3" X 3" X 2" TEE	UT	NS	121-101
X10.11	1N22-0136 @	2" COUPLING ON VALVE F022A TO PIPE	UT	NS	121-102
X10.11	1N22-0137 @	2" PIPE TO ELBOW	UT	NS	121-102
X10.11	1N22-0138 @	2" ELBOW TO PIPE	UT	NS	121-102
X10.11	1N22-0139 @	2" PIPE TO ELBOW	UT	NS	121-102

ITEM NO.	MARK NO.	COMPONENT DESCRIPTION	EXAM METHOD	SCHED.	ISI ISO SS-305-
		EXAMINATION CATEGORY: X-B			
X10.11	1N22-0140 @	2" ELBOW TO PIPE	UT	NS	121-102
X10.11	1N22-0141 @	2" PIPE TO ELBOW	UT	NS	121-102
X10.11	1N22-0142 @	2" ELBOW TO PIPE	UT	NS	121-102
X10.11	1N22-0143 @	2" PIPE TO ELBOW	UT	NS	121-102
X10.11	1N22-0144 @	2" ELBOW TO PIPE	UT	NS	121-102
X10.11	1N22-0145 @	2" PIPE TO ELBOW	UT	NS	121-102
X10.11	1N22-0146 @	2" ELBOW TO PIPE	UT	NS	121-102
X10.11	1N22-0147 @	2" PIPE TO 3" X 3" X 2" TEE	UT	NS*	121-102
X10.10	1N27-0007 @	20" VALVE F559A TO PIPE	UT	NS	082-102
X10.10	1N27-0008 @	20" PENETRATION P121 PROCESS PIPE TO VALVE F559A	UT	NS	082-102
X10.10	1N27-0009 @	20" VALVE F032A TO PENETRATION P121 PROCESS PIPE	UT	NS*	082-101
X10.10	1N27-0010 @	20" PIPE TO VALVE F032A	UT	NS	082-101
X10.10	1N27-0010A @	20" PIPE TO PIPE	UT	NS**	082-101
X10.10	1N27-0011 @	20" X 20" X 14" TEE TO 20" PIPE	UT	NS	082-101
X10.10	1N27-0011A @	20" X 20" X 14" TEE TO 14" X 12" REDUCER	UT	NS	082-101
X10.10	1N27-0012 @	20" PIPE TO 20" X 20" X 14" TEE	UT	NS	082-101
X10.10	1N27-0013 @	20" VALVE F065A TO PIPE	UT	NS	082-101
X10.10	1N27-0014	20" PIPE TO VALVE F065A	UT	NS	082-101
X10.10	1N27-0021 @	20" VALVE F559B TO PIPE	UT	NS	082-105
X10.10	1N27-0022 @	20" PENETRATION P414 PROCESS PIPE TO VALVE F559B	UT	NS*	082-105
X10.10	1N27-0023 @	20" VALVE F032B TO PENETRATION P414 PROCESS PIPE	UT	NS	082-104
X10.10	1N27-0024 @	20" PIPE TO VALVE F032B	UT	NS	082-104
X10.10	1N27-0024A @	20" PIPE TO PIPE	UT	NS	082-104
X10.10	1N27-0025 @	20" X 20" X 14" TEE TO 20" PIPE	UT	NS**	082-104
X10.10	1N27-0025A @	20" X 20" X 24" TEE TO 14" X 12" REDUCER	UT	3	082-104
X10.10	1N27-0026 @	20" PIPE TO 20" X 20" X 14" TEE	UT	NS	082-104
X10.10	1N27-0027 @	20" VALVE F065B TO PIPE	UT	NS	082-104
X10.10	1N27-0028	20" PIPE TO VALVE F065B	UT	NS	082-104
X10.11	1N27-0071	1 1/2" VALVE F740 TO PIPE	UT	NS	971-102
X10.11	1N27-0072	1 1/2" PIPE TO ELBOW	UT	NS	971-102
X10.11	1N27-0073	1 1/2" ELBOW TO PIPE	UT	NS	971-102
X10.11	1N27-0074	1 1/2" PIPE TO ELBOW	UT	NS	971-102
X10.11	1N27-0075	1 1/2" ELBOW TO PIPE	UT	NS	971-102
X10.11	1N27-0076	1 1/2" PIPE TO CROSS	UT	NS	971-102
X10.11	1N27-0077	1 1/2" CROSS TO 1 1/2" X 1" REDUCER	UT	NS	971-102
X10.11	1N27-0078	1 1/2" CROSS TO 1 1/2" X 1" REDUCER	UT	NS	971-102
X10.11	1N27-0079	1 1/2" CROSS TO PIPE	UT	NS	971-102
X10.11	1N27-0080	1 1/2" PIPE TO TEE	UT	NS	971-102

ITEM NO.	MARK NO.	COMPONENT DESCRIPTION	EXAM METHOD	SCHED.	ISI ISO SS-305-
		EXAMINATION CATEGORY: X-B			
X10.11	1N27-0081	1 1/2" TEE TO 1 1/2" X 1" REDUCER	UT	NS	971-102
X10.11	1N27-0082	1 1/2" TEE TO 1 1/2" X 1" REDUCER	UT	NS	971-102
X10.11	1N27-0083	1 1/2" VALVE F737 TO PIPE	UT	NS	971-101
X10.11	1N27-0084	1 1/2" PIPE TO CROSS	UT	NS	971-101
X10.11	1N27-0085	1 1/2" CROSS TO PIPE	UT	NS	971-101
X10.11	1N27-0086	1 1/2" TEE TO 1 1/2" X 1" REDUCER	UT	NS	971-101
X10.11	1N27-0087	1 1/2" CROSS TO 1 1/2" X 1" REDUCER	UT	NS	971-101
X10.11	1N27-0088	1 1/2" PIPE TO TEE	UT	NS	971-101
X10.11	1N27-0089	1 1/2" TEE TO 1 1/2" X 1" REDUCER	UT	NS	971-101
X10.11	1N27-0090	1 1/2" TEE TO 1 1/2" X 1" REDUCER	UT	NS	971-101

* These Category X-B welds are selected in the basis document for HEBER under TAF #81871 however, scheduled for examination in Section 2.0, Category R-A.
** These Category X-B welds are selected in the basis document for HEBER under TAF #81871 however, scheduled for examination in Section 3.0, Category C-F-2.
… These welds must continue to be selected for HEBER to meet our RI-BER 50.59.

		EXAMINATION CATEGORY: X-C			
X11.10	1B13-FWS	FEEDWATER SPARGERS	VT-3	R13,17	006-118
X11.15	1B13-FWSBP	FEEDWATER SPARGER BRACKET PINS	VT-3	R13,17	006-118
X11.20	1B13-N4A-IR @	FW NOZZLE N4A INNER RADIUS	UT	NS*	006-108
X11.20	1B13-N4B-IR @	FW NOZZLE N4B INNER RADIUS	UT	NS*	006-108
X11.20	1B13-N4C-IR @	FW NOZZLE N4C INNER RADIUS	UT	NS*	006-108
X11.20	1B13-N4D-IR @	FW NOZZLE N4D INNER RADIUS	UT	NS*	006-108
X11.20	1B13-N4E-IR @	FW NOZZLE N4E INNER RADIUS	UT	NS*	006-108
X11.20	1B13-N4F-IR @	FW NOZZLE N4F INNER RADIUS	UT	NS*	006-108

* Scheduled for examination in Section 2.0, Category B-D. Examinations are to comply with the requirements of NUREG-0619 as modified by General Electric report GE-NE-523-A71-0594-A, "Alternate BWR Feedwater Nozzle Inspection Requirements," and as documented in Technical Assignment File No. 81835.

ITEM NO.	MARK NO.	COMPONENT DESCRIPTION	EXAM METHOD	SCHED.	ISI ISO SS-305-
		EXAMINATION CATEGORY: X-E			
X10.20	1B21-P122-WA @	PENETRATION P122 FLUED HEAD FITTING TO PROCESS PIPE ATTACHMENT WELD	UT	2	605-109
X10.20	1B21-P124-WA @	PENETRATION P124 FLUED HEAD FITTING TO PROCESS PIPE ATTACHMENT WELD	UT	3	605-107
X10.20	1B21-P415-WA @	PENETRATION P415 FLUED HEAD FITTING TO PROCESS PIPE ATTACHMENT WELD	UT	1	605-110
X10.20	1B21-P416-WA @	PENETRATION P416 FLUED HEAD FITTING TO PROCESS PIPE ATTACHMENT WELD	UT	2	605-108
X10.20	1N27-P121-WA @	PENETRATION P121 FLUED HEAD FITTING TO PROCESS PIPE ATTACHMENT WELD	UT	1	082-101
X10.20	1N27-P414-WA @	PENETRATION P414 FLUED HEAD FITTING TO PROCESS PIPE ATTACHMENT WELD	UT	3	082-104
		EXAMINATION CATEGORY: X-F			
X14.10	1B13-AE-SUR	NO. 4 SHELL RING TO SHELL FLANGE CIRC SEAM	UT	NS*	006-102
X14.20	1B13-AG-SUR	TOP HEAD TO FLANGE WELD	MT	NS**	006-103

* The augmented requirement is met by performing the Code UT examination in Section 2.0, Category B-A, with techniques capable of detecting outside surface flaws ≤ 0.24" deep.
** The augmented requirement is met by the scheduled Code examination in Section 2.0, Category B-A.

		EXAMINATION CATEGORY: X-G			
X15.20	1B13-N1A-KB @	RR OUTLET NOZZLE N1A TO SAFE-END - DM Weld	UT	NS**	006-107
X15.20	1B13-N1B-KB @	RR OUTLET NOZZLE N1B TO SAFE-END - DM Weld	UT	NS**	006-107
X15.20	1B13-N2A-KB @	RR INLET NOZZLE N2A TO SAFE-END - DM Weld	UT	NS**	006-107
X15.20	1B13-N2B-KB @	RR INLET NOZZLE N2B TO SAFE-END - DM Weld	UT	NS**	006-107
X15.20	1B13-N2C-KB @	RR INLET NOZZLE N2C TO SAFE-END - DM Weld	UT	NS**	006-107
X15.20	1B13-N2D-KB @	RR INLET NOZZLE N2D TO SAFE-END - DM Weld	UT	NS**	006-107
X15.20	1B13-N2E-KB @	RR INLET NOZZLE N2E TO SAFE-END - DM Weld	UT	NS**	006-107
X15.20	1B13-N2F-KB @	RR INLET NOZZLE N2F TO SAFE-END - DM Weld	UT	NS**	006-107

ITEM NO.	MARK NO.	COMPONENT DESCRIPTION	EXAM METHOD	SCHED.	ISI ISO SS-305-
		EXAMINATION CATEGORY: X-G			
X15.20	1B13-N2G-KB @	RR INLET NOZZLE N2G TO SAFE-END - DM Weld	UT	NS**	006-107
X15.20	1B13-N2H-KB @	RR INLET NOZZLE N2H TO SAFE-END - DM Weld	UT	NS**	006-107
X15.20	1B13-N2J-KB @	RR INLET NOZZLE N2J TO SAFE-END - DM Weld	UT	NS**	006-107
X15.20	1B13-N2K-KB @	RR INLET NOZZLE N2K TO SAFE-END - DM Weld	UT	NS**	006-108
X15.20	1B13-N4A-KB @	FW NOZZLE N4A TO SAFE-END - DM Weld	UT	NS**	006-108
X15.20	1B13-N4B-KB @	FW NOZZLE N4B TO SAFE-END - DM Weld	UT	NS**	006-108
X15.30	1B13-N4C-KB @	FW NOZZLE N4C TO SAFE-END - DM Weld (Overlayed)	UT	NS**	006-108
X15.20	1B13-N4D-KB @	FW NOZZLE N4D TO SAFE-END - DM Weld	UT	NS**	006-108
X15.30	1B13-N4E-KB @	FW NOZZLE N4E TO SAFE-END - DM Weld (with MSIP)	UT	NS**	006-108
X15.20	1B13-N4F-KB @	FW NOZZLE N4F TO SAFE-END - DM Weld	UT	NS**	006-108
X15.20	1B13-N5A-KB @	LPCS NOZZLE N5A TO SAFE-END - DM Weld	UT	NS**	006-109
X15.20	1B13-N5B-KB @	HPCS NOZZLE N5B TO SAFE-END - DM Weld	UT	NS**	006-109
X15.10	1B13-N5A-KC @	LPCS NOZZLE SAFE-END TO SAFE-END EXT - DM Weld	UT	NS*	006-109
X15.10	1B13-N5B-KC @	HPCS NOZZLE SAFE-END TO SAFE-END EXT - DM Weld	UT	NS	006-109
X15.20	1B13-N6A-KB @	RHR NOZZLE N6A TO SAFE-END - DM Weld	UT	NS**	006-109
X15.20	1B13-N6B-KB @	RHR NOZZLE N6B TO SAFE-END - DM Weld	UT	NS**	006-109
X15.20	1B13-N6C-KB @	RHR NOZZLE N6C TO SAFE-END - DM Weld	UT	NS**	006-109
X15.10	1B13-N6A-KC @	RHR NOZZLE N6A SAFE-END TO SAFE-END EXT - DM Weld	UT	NS	006-109
X15.10	1B13-N6B-KC @	RHR NOZZLE N6B SAFE-END TO SAFE-END EXT - DM Weld	UT	NS	006-109
X15.10	1B13-N6C-KC @	RHR NOZZLE N6C SAFE-END TO SAFE-END EXT - DM Weld	UT	NS	006-109
X15.20	1B13-N9A-KB @	JET PUMP INSTR NOZZLE N9A TO SAFE-END - DM Weld	UT	NS**	006-106
X15.20	1B13-N9A-KC @	JET PUMP INSTR NOZZLE SAFE-END TO PEN SEAL	UT	NS*	006-106
X15.20	1B13-N9B-KB @	JET PUMP INSTR NOZZLE N9B TO SAFE-END - DM Weld	UT	NS**	006-106
X15.20	1B13-N9B-KC @	JET PUMP INSTR NOZZLE SAFE-END TO PEN SEAL	UT	NS*	006-106
X15.11	1B33-0002 @	22" NOZZLE NIA SAFE-END (CRC)	UT, PT	NS	602-102
X15.10	1B33-0002-D @	PIPE SEAM, DOWNSTREAM	UT, PT	NS	602-102
X15.10	1B33-0003 @	22" ELBOW TO PIPE	UT, PT	NS*	602-102
X15.10	1B33-0003-U @	PIPE SEAM, UPSTREAM	UT, PT	NS*	602-102
X15.10	1B33-0003-D1 @	ELBOW SHORT SEAM, DOWNSTREAM	UT, PT	NS*	602-102
X15.10	1B33-0003-D2 @	ELBOW LONG SEAM, DOWNSTREAM	UT, PT	NS*	602-102
X15.10	1B33-0003A @	22" ELBOW TO PIPE	UT, PT	NS*	602-102
X15.10	1B33-0003A-U1 @	ELBOW SHORT SEAM, UPSTREAM	UT, PT	NS*	602-102
X15.10	1B33-0003A-U2 @	ELBOW LONG SEAM, UPSTREAM	UT, PT	NS*	602-102
X15.10	1B33-0003A-D @	PIPE SEAM, DOWNSTREAM	UT, PT	NS*	602-102
X15.11	1B33-0004 @	22" PIPE TO PIPE (CRC)	UT, PT	NS	602-102
X15.10	1B33-0004-U @	PIPE SEAM, UPSTREAM	UT, PT	NS	602-102
X15.10	1B33-0004-D @	PIPE SEAM, DOWNSTREAM	UT, PT	NS	602-102
X15.10	1B33-0005 @	22" PIPE TO ELBOW	UT, PT	NS	602-102
X15.10	1B33-0005-U @	PIPE SEAM, UPSTREAM	UT, PT	NS	602-102
X15.10	1B33-0005-D1 @	ELBOW SHORT SEAM, DOWNSTREAM	UT, PT	NS	602-102

ITEM NO.	MARK NO.	COMPONENT DESCRIPTION	EXAM METHOD	SCHED.	ISI ISO SS-305-
		EXAMINATION CATEGORY: X-G			
X15.10	1B33-0005-D2 @	ELBOW LONG SEAM, DOWNSTREAM	UT, PT	NS	602-102
X15.11	1B33-0006 @	22" ELBOW TO VALVE, F023A (CRC)	UT, PT	NS	602-102
X15.10	1B33-0006-U1 @	ELBOW SHORT SEAM, UPSTREAM	UT, PT	NS	602-102
X15.10	1B33-0006-U2 @	ELBOW LONG SEAM, UPSTREAM	UT, PT	NS	602-102
X15.11	1B33-0007 @	VALVE F023A TO 22" PIPE (CRC)	UT, PT	NS	602-102
X15.10	1B33-0007-D @	PIPE SEAM, DOWNSTREAM	UT, PT	NS	602-102
X15.10	1B33-0008 @	22" PIPE TO 22" X 4" CONTOUR NOZZLE	UT, PT	NS	602-102
X15.10	1B33-0008A @	22" PIPE TO 22" X 4" SWEEPOLET	UT, PT	NS	602-102
X15.10	1B33-0009 @	22" X 4" CONTOUR NOZZLE TO 4" PIPE	UT, PT	NS	602-102
X15.10	1B33-0009-D @	PIPE SEAM, DOWNSTREAM	UT, PT	NS	602-102
X15.10	1B33-0010 @	4" PIPE TO FLANGE	UT, PT	NS	602-102
X15.10	1B33-0010-U @	PIPE SEAM, UPSTREAM	UT, PT	NS	602-102
X15.10	1B33-0011 @	22" PIPE TO ELBOW	UT, PT	NS	602-102
X15.10	1B33-0011-U @	PIPE SEAM, UPSTREAM	UT, PT	NS	602-102
X15.10	1B33-0011-D1 @	ELBOW SHORT SEAM, DOWNSTREAM	UT, PT	NS	602-102
X15.10	1B33-0011-D2 @	ELBOW LONG SEAM, DOWNSTREAM	UT, PT	NS	602-102
X15.11	1B33-0012 @	22" ELBOW TO PUMP C001A CASING (CRC)	UT, PT	NS	602-102
X15.10	1B33-0012-U1 @	ELBOW SHORT SEAM, UPSTREAM	UT, PT	NS	602-102
X15.10	1B33-0012-U2 @	ELBOW LONG SEAM, UPSTREAM	UT, PT	NS	602-102
X15.11	1B33-0014 @	PUMP C001A CASING TO 24" PIPE (CRC)	UT, PT	NS	602-102
X15.10	1B33-0014-D @	PIPE SEAM, DOWNSTREAM	UT, PT	NS	602-102
X15.10	1B33-0015 @	24" PIPE TO 24" X 4" CONTOUR NOZZLE	UT, PT	NS	602-102
X15.10	1B33-0016 @	24" X 4" CONTOUR NOZZLE TO 4" PIPE	UT, PT	NS	602-102
X15.10	1B33-0016-D @	PIPE SEAM, DOWNSTREAM	UT, PT	NS	602-102
X15.10	1B33-0017 @	4" PIPE TO FLANGE	UT, PT	NS	602-102
X15.10	1B33-0017-U @	PIPE SEAM, UPSTREAM	UT, PT	NS	602-102
X15.11	1B33-0018 @	24" PIPE TO VALVE F060A (CRC)	UT, PT	NS	602-102
X15.10	1B33-0018-U @	PIPE SEAM, UPSTREAM	UT, PT	NS	602-102
X15.11	1B33-0019 @	VALVE F060A TO 24" PIPE (CRC)	UT, PT	NS	602-102
X15.10	1B33-0019-D @	PIPE SEAM, DOWNSTREAM	UT, PT	NS	602-102
X15.10	1B33-0020 @	24" PIPE TO ELBOW	UT, PT	NS*	602-102
X15.10	1B33-0020-U @	PIPE SEAM, UPSTREAM	UT, PT	NS*	602-102
X15.10	1B33-0020-D1 @	ELBOW SHORT SEAM, DOWNSTREAM	UT, PT	NS*	602-102
X15.10	1B33-0020-D2 @	ELBOW LONG SEAM, DOWNSTREAM	UT, PT	NS*	602-102
X15.10	1B33-0021 @	24" ELBOW TO PIPE	UT, PT	NS*	602-102
X15.10	1B33-0021-U1 @	ELBOW SHORT SEAM, UPSTREAM	UT, PT	NS*	602-102
X15.10	1B33-0021-U2 @	ELBOW LONG SEAM, UPSTREAM	UT, PT	NS*	602-102
X15.10	1B33-0021-D @	PIPE SEAM, DOWNSTREAM	UT, PT	NS*	602-102
X15.11	1B33-0022 @	24" PIPE TO VALVE F067A (CRC)	UT, PT	NS	602-102
X15.10	1B33-0022-U @	PIPE SEAM, UPSTREAM	UT, PT	NS	602-102

ITEM NO.	MARK NO.	COMPONENT DESCRIPTION	EXAM METHOD	SCHED.	ISI ISO SS-305-
		EXAMINATION CATEGORY: X-G			
X15.11	1B33-0023 @	VALVE F067A TO 24" PIPE (CRC)	UT, PT	NS	602-102
X15.10	1B33-0023-D @	PIPE SEAM, DOWNSTREAM	UT, PT	NS	602-102
X15.10	1B33-0024 @	24" PIPE TO ELBOW	UT, PT	NS	602-102
X15.10	1B33-0024-U @	PIPE SEAM, UPSTREAM	UT, PT	NS	602-102
X15.10	1B33-0024-D1 @	ELBOW SHORT SEAM, DOWNSTREAM	UT, PT	NS	602-102
X15.10	1B33-0024-D2 @	ELBOW LONG SEAM, DOWNSTREAM	UT, PT	NS	602-102
X15.10	1B33-0025 @	24" ELBOW TO PIPE	UT, PT	NS	602-102
X15.10	1B33-0025-U1 @	ELBOW SHORT SEAM, UPSTREAM	UT, PT	NS	602-102
X15.10	1B33-0025-U2 @	ELBOW LONG SEAM, UPSTREAM	UT, PT	NS	602-102
X15.10	1B33-0025-D @	PIPE SEAM, DOWNSTREAM	UT, PT	NS	602-102
X15.11	1B33-0026 @	24" PIPE TO 24" X 16" CROSS (CRC)	UT, PT	NS	602-102
X15.10	1B33-0026-U @	PIPE SEAM, UPSTREAM	UT, PT	NS	602-102
X15.11	1B33-0027 @	16" PIPE CAP TO PIPE (CRC)	UT, PT	NS	602-102
X15.10	1B33-0027-U @	PIPE SEAM, UPSTREAM	UT, PT	NS	602-101
X15.10	1B33-0028 @	16" PIPE TO 16" X 12" SWEEPOLET	UT, PT	NS*	602-101
X15.10	1B33-0029 @	16" PIPE TO 16" X 12" SWEEPOLET	UT, PT	NS	602-101
X15.10	1B33-0030 @	16" PIPE TO 24" X 16" CROSS	UT, PT	NS	602-101
X15.10	1B33-0030-D @	PIPE SEAM, DOWNSTREAM	UT, PT	NS	602-101
X15.11	1B33-0031 @	24" X 16" CROSS TO 16" PIPE (CRC)	UT, PT	NS	602-101
X15.10	1B33-0031-D @	PIPE SEAM, DOWNSTREAM	UT, PT	NS	602-101
X15.10	1B33-0032 @	16" PIPE TO 16" X 12" SWEEPOLET	UT, PT	NS	602-101
X15.10	1B33-0033 @	16" PIPE TO 16" X 12" SWEEPOLET	UT, PT	NS	602-101
X15.11	1B33-0034 @	16" PIPE TO CAP (CRC)	UT, PT	NS	602-101
X15.10	1B33-0034-U @	PIPE SEAM, UPSTREAM	UT, PT	NS	602-101
X15.11	1B33-0035 @	16" X 12" SWEEPOLET TO 12" PIPE (CRC)	UT, PT	NS	602-101
X15.10	1B33-0035-D @	PIPE SEAM, DOWNSTREAM	UT, PT	NS	602-101
X15.10	1B33-0036 @	12" PIPE TO ELBOW	UT, PT	NS	602-101
X15.10	1B33-0036-U @	PIPE SEAM, UPSTREAM	UT, PT	NS	602-101
X15.10	1B33-0036-D @	ELBOW SEAM, DOWNSTREAM	UT, PT	NS	602-101
X15.10	1B33-0037 @	12" ELBOW TO PIPE	UT, PT	NS	602-101
X15.10	1B33-0037-U @	ELBOW SEAM, UPSTREAM	UT, PT	NS	602-101
X15.10	1B33-0037-D @	PIPE SEAM, DOWNSTREAM	UT, PT	NS	602-101
X15.11	1B33-0038 @	12" PIPE TO NOZZLE N2A SAFE-END (CRC)	UT, PT	NS	602-101
X15.10	1B33-0038-U @	PIPE SEAM, UPSTREAM	UT, PT	NS	602-101
X15.11	1B33-0040 @	16" X 12" SWEEPOLET TO 12" PIPE (CRC)	UT, PT	NS	602-101
X15.10	1B33-0040-D @	PIPE SEAM, DOWNSTREAM	UT, PT	NS	602-101
X15.10	1B33-0041 @	12" PIPE TO ELBOW	UT, PT	NS	602-101
X15.10	1B33-0041-U @	PIPE SEAM, UPSTREAM	UT, PT	NS	602-101
X15.10	1B33-0041-D @	ELBOW SEAM, DOWNSTREAM	UT, PT	NS	602-101

ITEM NO.	MARK NO.	COMPONENT DESCRIPTION	EXAM METHOD	SCHED.	ISI ISO SS-305-
		EXAMINATION CATEGORY: X-G			
X15.10	1B33-0042 @	12" ELBOW TO PIPE	UT, PT	NS	602-101
X15.10	1B33-0042-U @	ELBOW SEAM, UPSTREAM	UT, PT	NS	602-101
X15.10	1B33-0042-D @	PIPE SEAM, DOWNSTREAM	UT, PT	NS	602-101
X15.11	1B33-0043 @	12" PIPE TO NOZZLE N2B SAFE-END (CRC)	UT, PT	NS	602-101
X15.10	1B33-0043-U @	PIPE SEAM, UPSTREAM	UT, PT	NS	602-101
X15.10	1B33-0045 @	24" X 16" CROSS TO 24" X 12" REDUCER	UT, PT	NS	602-101
X15.11	1B33-0046 @	24" X 12" REDUCER TO 12" PIPE (CRC)	UT, PT	NS	602-101
X15.10	1B33-0046-D @	PIPE SEAM, DOWNSTREAM	UT, PT	NS	602-101
X15.10	1B33-0047 @	12" PIPE TO ELBOW	UT, PT	NS	602-101
X15.10	1B33-0047-U @	PIPE SEAM, UPSTREAM	UT, PT	NS	602-101
X15.10	1B33-0047-D @	ELBOW SEAM, DOWNSTREAM	UT, PT	NS	602-101
X15.10	1B33-0048 @	12" ELBOW TO PIPE	UT, PT	NS	602-101
X15.10	1B33-0048-U @	ELBOW SEAM, UPSTREAM	UT, PT	NS	602-101
X15.10	1B33-0048-D @	PIPE SEAM, DOWNSTREAM	UT, PT	NS	602-101
X15.11	1B33-0049 @	12" PIPE TO NOZZLE N2C SAFE-END (CRC)	UT, PT	NS	602-101
X15.10	1B33-0049-U @	PIPE SEAM, UPSTREAM	UT, PT	NS	602-101
X15.11	1B33-0051 @	16" X 12" SWEEPOLET TO 12" PIPE (CRC)	UT, PT	NS	602-101
X15.10	1B33-0051-D @	PIPE SEAM, DOWNSTREAM	UT, PT	NS	602-101
X15.10	1B33-0052 @	12" PIPE TO ELBOW	UT, PT	NS	602-101
X15.10	1B33-0052-U @	PIPE SEAM, UPSTREAM	UT, PT	NS	602-101
X15.10	1B33-0052-D @	ELBOW SEAM, DOWNSTREAM	UT, PT	NS	602-101
X15.10	1B33-0053 @	12" ELBOW TO PIPE	UT, PT	NS	602-101
X15.10	1B33-0053-U @	ELBOW SEAM, UPSTREAM	UT, PT	NS	602-101
X15.10	1B33-0053-D @	PIPE SEAM, DOWNSTREAM	UT, PT	NS	602-101
X15.11	1B33-0054 @	12" PIPE TO NOZZLE N2D SAFE-END (CRC)	UT, PT	NS	602-101
X15.10	1B33-0054-U @	PIPE SEAM, UPSTREAM	UT, PT	NS	602-101
X15.11	1B33-0056 @	16" X 12" SWEEPOLET TO 12" PIPE (CRC)	UT, PT	NS*	602-101
X15.10	1B33-0056-D @	PIPE SEAM, DOWNSTREAM	UT, PT	NS*	602-101
X15.10	1B33-0057 @	12" PIPE TO ELBOW	UT, PT	NS*	602-101
X15.10	1B33-0057-U @	PIPE SEAM, UPSTREAM	UT, PT	NS*	602-101
X15.10	1B33-0057-D @	ELBOW SEAM, DOWNSTREAM	UT, PT	NS*	602-101
X15.10	1B33-0058 @	12" ELBOW TO PIPE	UT, PT	NS*	602-101
X15.10	1B33-0058-U @	ELBOW SEAM, UPSTREAM	UT, PT	NS*	602-101
X15.10	1B33-0058-D @	PIPE SEAM, DOWNSTREAM	UT, PT	NS*	602-101
X15.11	1B33-0059 @	12" PIPE TO NOZZLE N2E SAFE-END (CRC)	UT, PT	NS	602-101
X15.10	1B33-0059-U @	PIPE SEAM, UPSTREAM	UT, PT	NS	602-101
X15.11	1B33-0062 @	22" NOZZLE N1B SAFE-END TO PIPE (CRC)	UT, PT	NS	602-104
X15.10	1B33-0062-D @	PIPE SEAM, DOWNSTREAM	UT, PT	NS	602-104
X15.10	1B33-0063 @	22" PIPE TO ELBOW	UT, PT	NS	602-104
X15.10	1B33-0063-U @	PIPE SEAM, UPSTREAM	UT, PT	NS	602-104

ITEM NO.	MARK NO.	COMPONENT DESCRIPTION	EXAM METHOD	SCHED.	ISI ISO SS-305-
		EXAMINATION CATEGORY: X-G			
X15.10	1B33-0063-D1 @	ELBOW SHORT SEAM, DOWNSTREAM	UT, PT	NS	602-104
X15.10	1B33-0063-D2 @	ELBOW LONG SEAM, DOWNSTREAM	UT, PT	NS	602-104
X15.10	1B33-0063A @	22" ELBOW TO PIPE	UT, PT	NS	602-104
X15.10	1B33-0063A-U1 @	ELBOW SHORT SEAM, UPSTREAM	UT, PT	NS	602-104
X15.10	1B33-0063A-U2 @	ELBOW LONG SEAM, UPSTREAM	UT, PT	NS	602-104
X15.10	1B33-0063A-D @	PIPE SEAM, DOWNSTREAM	UT, PT	NS	602-104
X15.11	1B33-0064 @	22" PIPE TO PIPE (CRC)	UT, PT	NS	602-104
X15.10	1B33-0064-U @	PIPE SEAM, UPSTREAM	UT, PT	NS	602-104
X15.10	1B33-0064-D @	PIPE SEAM, DOWNSTREAM	UT, PT	NS	602-104
X15.10	1B33-0065 @	22" PIPE TO 22" X 22" X 20" TEE	UT, PT	NS	602-104
X15.10	1B33-0065-U @	PIPE SEAM, UPSTREAM	UT, PT	NS	602-104
X15.10	1B33-0066 @	22" X 22" X 20" TEE TO 22" PIPE	UT, PT	NS	602-104
X15.10	1B33-0066-D @	PIPE SEAM, DOWNSTREAM	UT, PT	NS	602-104
X15.10	1B33-0067 @	22" PIPE TO ELBOW	UT, PT	NS	602-104
X15.10	1B33-0067-U @	PIPE SEAM, UPSTREAM	UT, PT	NS	602-104
X15.10	1B33-0067-D1 @	ELBOW SHORT SEAM, DOWNSTREAM	UT, PT	NS	602-104
X15.10	1B33-0067-D2 @	ELBOW LONG SEAM, DOWNSTREAM	UT, PT	NS	602-104
X15.11	1B33-0068 @	22" ELBOW TO VALVE B33-F023B (CRC)	UT, PT	NS	602-104
X15.10	1B33-0068-U1 @	ELBOW SHORT SEAM, UPSTREAM	UT, PT	NS	602-104
X15.10	1B33-0068-U2 @	ELBOW LONG SEAM, UPSTREAM	UT, PT	NS	602-104
X15.11	1B33-0069 @	VALVE B33-F023B TO 22" PIPE (CRC)	UT, PT	NS	602-104
X15.10	1B33-0069-D @	PIPE SEAM, DOWNSTREAM	UT, PT	NS	602-104
X15.10	1B33-0070 @	22" PIPE TO 22" X 4" CONTOUR NOZZLE	UT, PT	NS	602-104
X15.10	1B33-0070A @	22" PIPE TO 22" X 4" SWEEPOLET	UT, PT	NS	602-104
X15.10	1B33-0071 @	22" X 4" CONTOUR NOZZLE TO 4" PIPE	UT, PT	NS	602-104
X15.10	1B33-0071-D @	PIPE SEAM, DOWNSTREAM	UT, PT	NS	602-104
X15.10	1B33-0072 @	4" PIPE TO FLANGE	UT, PT	NS	602-104
X15.10	1B33-0072-U @	PIPE SEAM, UPSTREAM	UT, PT	NS	602-104
X15.10	1B33-0073 @	22" PIPE TO ELBOW	UT, PT	NS	602-104
X15.10	1B33-0073-U @	PIPE SEAM, UPSTREAM	UT, PT	NS	602-104
X15.10	1B33-0073-D1 @	ELBOW SHORT SEAM, DOWNSTREAM	UT, PT	NS	602-104
X15.10	1B33-0073-D2 @	ELBOW LONG SEAM, DOWNSTREAM	UT, PT	NS	602-104
X15.11	1B33-0074 @	22" ELBOW TO PUMP C001B CASING (CRC)	UT, PT	NS	602-104
X15.10	1B33-0074-U1 @	ELBOW SHORT SEAM, UPSTREAM	UT, PT	NS	602-104
X15.10	1B33-0074-U2 @	ELBOW LONG SEAM, UPSTREAM	UT, PT	NS	602-104
X15.11	1B33-0076 @	PUMP C001B CASING TO 24" PIPE (CRC)	UT, PT	NS	602-104
X15.10	1B33-0076-D @	PIPE SEAM, DOWNSTREAM	UT, PT	NS	602-104
X15.10	1B33-0077 @	24" PIPE TO 24" X 4" CONTOUR NOZZLE	UT, PT	NS	602-104
X15.10	1B33-0078 @	24" X 4" CONTOUR NOZZLE TO 4" PIPE	UT, PT	NS	602-104
X15.10	1B33-0078-D @	PIPE SEAM, DOWNSTREAM	UT, PT	NS	602-104

ITEM NO.	MARK NO.	COMPONENT DESCRIPTION	EXAM METHOD	SCHED.	ISI ISO SS-305-
		EXAMINATION CATEGORY: X-G			
X15.10	1B33-0079 @	4" PIPE TO FLANGE	UT, PT	NS	602-104
X15.10	1B33-0079-U @	PIPE SEAM, UPSTREAM	UT, PT	NS	602-104
X15.11	1B33-0080 @	24" PIPE TO VALVE B33-F060B (CRC)	UT, PT	NS	602-104
X15.10	1B33-0080-U @	PIPE SEAM, UPSTREAM	UT, PT	NS	602-104
X15.11	1B33-0081 @	VALVE F060B TO 24" PIPE (CRC)	UT, PT	NS	602-104
X15.10	1B33-0081-D @	PIPE SEAM, DOWNSTREAM	UT, PT	NS	602-104
X15.10	1B33-0082 @	24" PIPE TO ELBOW	UT, PT	NS	602-104
X15.10	1B33-0082-U @	PIPE SEAM, UPSTREAM	UT, PT	NS	602-104
X15.10	1B33-0082-D1 @	ELBOW SHORT SEAM, DOWNSTREAM	UT, PT	NS	602-104
X15.10	1B33-0082-D2 @	ELBOW LONG SEAM, DOWNSTREAM	UT, PT	NS	602-104
X15.10	1B33-0083 @	24" ELBOW TO PIPE	UT, PT	NS	602-104
X15.10	1B33-0083-U1 @	ELBOW SHORT SEAM, UPSTREAM	UT, PT	NS	602-104
X15.10	1B33-0083-U2 @	ELBOW LONG SEAM, UPSTREAM	UT, PT	NS	602-104
X15.10	1B33-0083-D @	PIPE SEAM, DOWNSTREAM	UT, PT	NS	602-104
X15.11	1B33-0084 @	24" PIPE TO VALVE F067B (CRC)	UT, PT	NS	602-104
X15.10	1B33-0084-U @	PIPE SEAM, UPSTREAM	UT, PT	NS	602-104
X15.11	1B33-0085 @	VALVE F067B TO 24" PIPE (CRC)	UT, PT	NS	602-104
X15.10	1B33-0085-D @	PIPE SEAM, DOWNSTREAM	UT, PT	NS	602-104
X15.10	1B33-0086 @	24" PIPE TO ELBOW	UT, PT	NS	602-104
X15.10	1B33-0086-U @	PIPE SEAM, UPSTREAM	UT, PT	NS	602-104
X15.10	1B33-0086-D1 @	ELBOW SHORT SEAM, DOWNSTREAM	UT, PT	NS	602-104
X15.10	1B33-0086-D2 @	ELBOW LONG SEAM, DOWNSTREAM	UT, PT	NS	602-104
X15.10	1B33-0087 @	24" ELBOW TO PIPE	UT, PT	NS	602-104
X15.10	1B33-0087-U1 @	ELBOW SHORT SEAM, UPSTREAM	UT, PT	NS	602-104
X15.10	1B33-0087-U2 @	ELBOW LONG SEAM, UPSTREAM	UT, PT	NS	602-104
X15.10	1B33-0087-D @	PIPE SEAM, DOWNSTREAM	UT, PT	NS	602-104
X15.11	1B33-0088 @	24" PIPE TO 24" X 16" CROSS (CRC)	UT, PT	NS	602-104
X15.10	1B33-0088-U @	PIPE SEAM, UPSTREAM	UT, PT	NS	602-104
X15.11	1B33-0089 @	16" PIPE CAP TO PIPE (CRC)	UT, PT	NS	602-103
X15.10	1B33-0089-U @	PIPE SEAM, UPSTREAM	UT, PT	NS	602-103
X15.10	1B33-0090 @	16" PIPE TO 16" X 12" SWEEPOLET	UT, PT	NS	602-103
X15.10	1B33-0091 @	16" PIPE TO 16" X 12" SWEEPOLET	UT, PT	NS	602-103
X15.10	1B33-0092 @	16" PIPE TO 24" X 16" CROSS	UT, PT	NS	602-103
X15.10	1B33-0092-D @	PIPE SEAM, DOWNSTREAM	UT, PT	NS	602-103
X15.11	1B33-0093 @	24" X 16" CROSS TO 16" PIPE (CRC)	UT, PT	NS	602-103
X15.10	1B33-0093-D @	PIPE SEAM, DOWNSTREAM	UT, PT	NS	602-103
X15.10	1B33-0094 @	16" PIPE TO 16" X 12" SWEEPOLET	UT, PT	NS	602-103
X15.10	1B33-0095 @	16" PIPE TO 16" X 12" SWEEPOLET	UT, PT	NS	602-103
X15.11	1B33-0096 @	16" PIPE TO CAP (CRC)	UT, PT	NS*	602-103
X15.10	1B33-0096-U @	PIPE SEAM, UPSTREAM	UT, PT	NS*	602-103

ITEM NO.	MARK NO.	COMPONENT DESCRIPTION	EXAM METHOD	SCHED.	ISI ISO SS-305-
		EXAMINATION CATEGORY: X-G			
X15.11	1B33-0097 @	16" X 12" SWEEPOLET TO 12" PIPE (CRC)	UT, PT	NS	602-103
X15.10	1B33-0097-D @	PIPE SEAM, DOWNSTREAM	UT, PT	NS	602-103
X15.10	1B33-0098 @	12" PIPE TO ELBOW	UT, PT	NS	602-103
X15.10	1B33-0098-D @	ELBOW SEAM, DOWNSTREAM	UT, PT	NS	602-103
X15.10	1B33-0098-U @	PIPE SEAM, UPSTREAM	UT, PT	NS	602-103
X15.10	1B33-0099 @	12" ELBOW TO PIPE	UT, PT	NS	602-103
X15.10	1B33-0099-D @	PIPE SEAM, DOWNSTREAM	UT, PT	NS	602-103
X15.10	1B33-0099-U @	ELBOW SEAM, UPSTREAM	UT, PT	NS	602-103
X15.11	1B33-0100 @	12" PIPE TO NOZZLE N2F SAFE-END (CRC)	UT, PT	NS	602-103
X15.10	1B33-0100-U @	PIPE SEAM, UPSTREAM	UT, PT	NS	602-103
X15.11	1B33-0102 @	16" X 12" SWEEPOLET TO 12" PIPE (CRC)	UT, PT	NS	602-103
X15.10	1B33-0102-D @	PIPE SEAM, DOWNSTREAM	UT, PT	NS	602-103
X15.10	1B33-0103 @	12" PIPE TO ELBOW	UT, PT	NS	602-103
X15.10	1B33-0103-D @	ELBOW SEAM, DOWNSTREAM	UT, PT	NS	602-103
X15.10	1B33-0103-U @	PIPE SEAM, UPSTREAM	UT, PT	NS	602-103
X15.10	1B33-0104 @	12" ELBOW TO PIPE	UT, PT	NS	602-103
X15.10	1B33-0104-D @	PIPE SEAM, DOWNSTREAM	UT, PT	NS	602-103
X15.10	1B33-0104-U @	ELBOW SEAM, UPSTREAM	UT, PT	NS	602-103
X15.11	1B33-0105 @	12" PIPE TO NOZZLE N2G SAFE-END (CRC)	UT, PT	NS	602-103
X15.10	1B33-0105-U @	PIPE SEAM, UPSTREAM	UT, PT	NS	602-103
X15.10	1B33-0107 @	24" X 16" CROSS TO 24" X 12" REDUCER	UT, PT	NS	602-103
X15.11	1B33-0108 @	24" X 12" REDUCER TO 12" PIPE (CRC)	UT, PT	NS	602-103
X15.10	1B33-0108-D @	PIPE SEAM, DOWNSTREAM	UT, PT	NS	602-103
X15.10	1B33-0109 @	12" PIPE TO ELBOW	UT, PT	NS*	602-103
X15.10	1B33-0109-D @	ELBOW SEAM, DOWNSTREAM	UT, PT	NS*	602-103
X15.10	1B33-0109-U @	PIPE SEAM, UPSTREAM	UT, PT	NS*	602-103
X15.10	1B33-0110 @	12" ELBOW TO PIPE	UT, PT	NS*	602-103
X15.10	1B33-0110-D @	PIPE SEAM, DOWNSTREAM	UT, PT	NS*	602-103
X15.10	1B33-0110-U @	ELBOW SEAM, UPSTREAM	UT, PT	NS*	602-103
X15.11	1B33-0111 @	12" PIPE TO NOZZLE N2H SAFE-END (CRC)	UT, PT	NS	602-103
X15.10	1B33-0111-U @	PIPE SEAM, UPSTREAM	UT, PT	NS	602-103
X15.11	1B33-0113 @	16" X 12" SWEEPOLET TO 12" PIPE (CRC)	UT, PT	NS	602-103
X15.10	1B33-0113-D @	PIPE SEAM, DOWNSTREAM	UT, PT	NS	602-103
X15.10	1B33-0114 @	12" PIPE TO ELBOW	UT, PT	NS	602-103
X15.10	1B33-0114-D @	ELBOW SEAM, DOWNSTREAM	UT, PT	NS	602-103
X15.10	1B33-0114-U @	PIPE SEAM, UPSTREAM	UT, PT	NS	602-103
X15.10	1B33-0115 @	12" ELBOW TO PIPE	UT, PT	NS	602-103
X15.10	1B33-0115-D @	PIPE SEAM, DOWNSTREAM	UT, PT	NS	602-103
X15.10	1B33-0115-U @	ELBOW SEAM, UPSTREAM	UT, PT	NS	602-103
X15.11	1B33-0116 @	12" PIPE TO NOZZLE N2J SAFE-END (CRC)	UT, PT	NS	602-103

ITEM NO.	MARK NO.	COMPONENT DESCRIPTION	EXAM METHOD	SCHED.	ISI ISO SS-305-
		EXAMINATION CATEGORY: X-G			
X15.10	1B33-0116-U @	PIPE SEAM, UPSTREAM	UT, PT	NS	602-103
X15.11	1B33-0118 @	16" X 12" SWEEPOLET TO 12" PIPE (CRC)	UT, PT	NS	602-103
X15.10	1B33-0118-D @	PIPE SEAM, DOWNSTREAM	UT, PT	NS	602-103
X15.10	1B33-0119 @	12" PIPE TO ELBOW	UT, PT	NS	602-103
X15.10	1B33-0119-D @	ELBOW SEAM, DOWNSTREAM	UT, PT	NS	602-103
X15.10	1B33-0119-U @	PIPE SEAM, UPSTREAM	UT, PT	NS	602-103
X15.10	1B33-0120 @	12" ELBOW TO PIPE	UT, PT	NS	602-103
X15.10	1B33-0120-D @	PIPE SEAM, DOWNSTREAM	UT, PT	NS	602-103
X15.10	1B33-0120-U @	ELBOW SEAM, UPSTREAM	UT, PT	NS	602-103
X15.11	1B33-0121 @	12" PIPE TO NOZZLE N2K SAFE-END (CRC)	UT, PT	NS	602-103
X15.10	1B33-0121-U @	PIPE SEAM, UPSTREAM	UT, PT	NS	602-103
X15.11	1E12-0001 @	22" X 22" X 20" TEE TO 20" PIPE (CRC ON TEE ONLY)	UT, PT	NS	642-118
X15.10	1E12-0001A @	20" SS PIPE TO 20" CS PIPE - DM Weld (RR TIE-IN)	UT, PT	NS	642-118
X15.12	1G33-0071 @	4" SS PIPE TO 4" CS PIPE - DM Weld	UT, PT	NS	671-103
X15.12	1G33-0073 @	4" BENT PIPE TO PIPE	UT, PT	NS	671-105
X15.12	1G33-0075 @	4" X 4" TEE TO PIPE	UT, PT	NS	671-105
X15.12	1G33-0076 @	4" X 4" TEE TO PIPE	UT, PT	NS	671-105
X15.12	1G33-0078 @	4" PIPE TO BENT PIPE	UT, PT	NS	671-105
X15.12	1G33-0080 @	4" CS PIPE TO 4" SS PIPE - DM Weld	UT, PT	NS**	671-105
X15.11	1G33-0087 @	4"x22" SS SWEEPOLET TO 4" CS PIPE - DM Weld (SS has CRC)	UT, PT	NS	671-105
X15.12	1G33-0088 @	4" PIPE TO TEE	UT, PT	NS	671-105
X15.12	1G33-0090 @	4" PIPE TO BENT PIPE	UT, PT	NS	671-106
X15.12	1G33-0091 @	4" PIPE TO PIPE	UT, PT	NS	671-106
X15.12	1G33-0092 @	4" BENT PIPE TO PIPE	UT, PT	NS	671-106
X15.12	1G33-0094 @	4" BENT PIPE TO PIPE	UT, PT	NS	671-106
X15.12	1G33-0096 @	4" BENT PIPE TO PIPE	UT, PT	NS	671-106
X15.12	1G33-0097 @	4" PIPE TO PIPE	UT, PT	NS	671-106
X15.12	1G33-0099 @	4" PIPE TO BENT PIPE	UT, PT	NS	671-106
X15.12	1G33-0101 @	4" PIPE TO BENT PIPE	UT, PT	NS*	671-107
X15.12	1G33-0103 @	4" PIPE TO BENT PIPE	UT, PT	NS	671-107
X15.12	1G33-0106 @	4" CS PIPE TO 4" SS PIPE - DM Weld	UT, PT	NS	671-107
X15.11	1G33-0113 @	4"x22" SS SWEEPOLET TO 4" CS PIPE - DM Weld (SS has CRC)	UT, PT	NS	671-107

* These Category X-G welds are scheduled for examination in Section 2.0, Category R-A (Formerly B-J)
** These Category X-G welds are scheduled for examination in Section 2.0, Category R-A (Formerly B-F)

ITEM NO.	MARK NO.	COMPONENT DESCRIPTION	EXAM METHOD	SCHED.	ISI ISO SS-305-
		EXAMINATION CATEGORY: X-H			
X16.10	1B13-N11	CORE DIFFERENTIAL PRESSURE NOZZLE	PT	NS	006-104
X16.10	1B13-N12A @	INSTRUMENTATION NOZZLES	PT	NS	006-106
X16.10	1B13-N12B @	INSTRUMENTATION NOZZLES	PT	NS	006-106
X16.10	1B13-N12C @	INSTRUMENTATION NOZZLES	PT	NS	006-106
X16.10	1B13-N12D @	INSTRUMENTATION NOZZLES	PT	NS	006-106
X16.10	1B13-N13A @	INSTRUMENTATION NOZZLES	PT	NS	006-106
X16.10	1B13-N13B @	INSTRUMENTATION NOZZLES	PT	NS	006-106
X16.10	1B13-N13C @	INSTRUMENTATION NOZZLES	PT	NS	006-106
X16.10	1B13-N13D @	INSTRUMENTATION NOZZLES	PT	NS	006-106
X16.10	1B13-N14A @	INSTRUMENTATION NOZZLES	PT	2	006-106
X16.10	1B13-N14B @	INSTRUMENTATION NOZZLES	PT	2	006-106
X16.10	1B13-N14C @	INSTRUMENTATION NOZZLES	PT	NS	006-106
X16.10	1B13-N14D @	INSTRUMENTATION NOZZLES	PT	NS	006-106
X16.10	1B13-N18	LIQUID CONTROL NOZZLE	PT	NS	006-104

8.0 SNUBBERS

Snubbers are devices (component supports) which provide restraint to a component or system during a sudden application of force but allows for freedom of motion during thermal movement. The ASME Operation and Maintenance (OM) Code, ISTD and plant Operational Requirements Manual (ORM) identify snubber examination boundaries differently. The ASME OM Code and ORM identify snubber examination boundaries pin to pin. The ASME Section XI Code identifies component support (which includes snubbers) examination boundaries as pipe end attachment to structural support end attachment. The ASME Section XI Category F-A visual examination requirements for component support assemblies that contain snubbers are identified in Section 6.0. All other snubber examination testing required by the ORM and/or ASME OM Code, ISTD are covered by PAP-1115, Snubber Augmented Visual Inservice Inspection/Examination and Functional Testing Program.

9.0 SYSTEM PRESSURE TESTS

9.1 Terminology

Pressure tests are grouped by system operational requirements, associated safety class and frequency. The system pressure test are grouped as:

Leakage - Conducted on systems (or components) while the system is in operation, during a system operability test, or while the system is at test conditions using an external pressurization source.

Hydrostatic - Conducted during a plant shutdown at a pressure above nominal operating pressure or system pressure for which overpressure protection is provided.

Pneumatic - Conducted in lieu of a leakage or hydrostatic pressure test for Class 2 and Class 3 components in gaseous systems.

9.2 Exemptions

Open-ended portions of Class 2 and 3 systems are exempted from system pressure tests and associated VT-2 visual exams (refer to Interpretation XI-1-98-13). No other components within the pressure-retaining boundary are exempt or excluded from routine pressure testing/VT-2 examination requirements. For Repair/Replacement activities, exemptions are defined in IWA-4000 and NOP-CC-5703.

9.3 Test Pressurization Boundaries

Pressurization boundaries are utilized to provide a scope of testing required to satisfy parts to be examined. The boundary limits are generally defined by the location of the safety class interface valves within the system.

1. System Leakage Test

The boundary subject to test pressurization during a system leakage test includes the pressure retaining components to be tested in accordance with IWB-5222 (Class 1), IWC-5222 (Class 2), and IWD-5240 (Class 3).

2. System Hydrostatic Test Boundary

The boundary subject to test pressurization shall include:

a. By the system boundary (or each portion of the boundary) within which the components have the same minimum required classification and are designed to the same primary pressure rating as governed by the system function and the internal fluid operating conditions, respectively.
b. Systems which share safety functions for different modes of plant operation, and within which the component classifications differ, shall be subject to separate system pressure tests of each portion of the system boundary having the same minimum required component classifications.
c. Systems designed to operate at different pressures under several modes of plant operation or post-accident conditions shall be subject to a system pressure test within the test boundary defined by the operating mode with the higher pressure.
d. Where the respective system primary pressure ratings on the suction and discharge sides of system pumps differ, the system test boundary shall be divided into two separate boundaries (such as suction side and discharge side test boundaries). In the case of positive displacement pumps, the boundary interface shall be considered as the pump.

9.4 Pressure Testing Following Repair/Replacement Activities

Refer to Section 1.10.

9.5 Relief Requests

When compliance to code specified pressure testing and corresponding visual examination requirements are not achievable relief must be requested. The relief requests that are submitted to the NRC for approval are processed through Fleet Licensing and become docketed correspondence, a copy captured in the ISI Program Notebook and attached as information only. The following Pressure Test (PT) Relief Requests is required:

IR No./Rev	Submittal Letter	NRC Safety Eval
PT-001, R-2	L-10-246	SE to follow review/approval

NOTE: Pressure Testing relief requests PT-002, PT-003, PT-004, PT-005, PT-006, PT-007 and PT-008 were withdrawn or were not re-submitted for the third inspection interval.

Perry Nuclear Power Plant Unit 1
RELIEF REQUEST #PT-001, Rev. 2

1. ASME Code Components Affected

ASME Code Class 2 system valves/components attached to the Reactor Coolant Pressure Boundary (ASME Code Class 1) which are not provided with either pressure or test isolation (i.e., instrumentation, drain, vent, and test piping), Category C-H, Item No. C7.10 (Pressure retaining components). A list of functional location (component) numbers identified on Table #PT-001-1 displays the affected components (i.e., valves, piping systems and instruments).

2. Applicable Code Edition and Addenda

The applicable ASME B&PV Section XI code of record for Perry NPP for the 3rd 10-Year Inservice Inspection Interval is the 2001 Edition through the 2003 Addenda as modified by 10CFR50.55a.

3. Applicable Code Requirements

Table IWC-2500-1, Category C-H, Item No. C7.10 requires all pressure retaining components be visual examined (VT-2, System Leakage Test) for evidence of leakage. Table IWC-2500-1, Category C-H, Item No. C7.10 states the requirements of IWC-5210(a) apply which reference IWA-5000 for test conditions required during System Leakage Tests. The subject system valves/components are required to operate during normal plant operation so therefore sub-article IWA-5213(a)(3) requires ASME Class 2 systems be operation for at least four (4) hours prior to commencing System Leakage Tests.

4. Reason for Request

Pursuant to 10 CFR 50.55a(a)(3)(i), alternative is requested from operating the system for four hours before commencing the VT-2 examinations for those Class 2 systems/components that are non-isolable from the Reactor Coolant Pressure Boundary (Class 1). These components shall be examined (VT-2 Visual Examination) during the Class 1 Reactor Coolant Boundary System Leakage Test at the frequency intervals specified within Subsection IWC. Thus, this relief request proposes substituting IWA-5213(a)(1) for IWA-5213(a)(3) and IWB-5210(a) for IWC-5210(a). The relief is requested for Perry's third 10-year inspection interval.

5. Proposed Alternative and Basis for Use

For those Class 2 systems/components attached to the Reactor Coolant Pressure Boundary (Class 1) which are not provided with either pressure or test isolation, pressure testing will be conducted in accordance with IWA-5213(a)(1) and IWB-5210(a) in lieu of IWA-5213(a)(3) and IWC-5210(a), i.e. components that are required to operate during normal conditions will not be operating for four (4) hours prior to commencing System Leakage Tests. The non-isolable (from the ASME Code Class 1 boundary) ASME Code Class 2 system valves/components will be examined during the ASME Code Class 1 System Leakage Test.

Numerous components attached to the reactor coolant pressure boundary are covered by the provisions of 10CFR50.55a(c) Reactor Coolant Pressure Boundary. The following excerpt from 10CFR50a(c) is provided:

"(2) Components which are connected to the reactor coolant system and are part of the reactor coolant pressure boundary as defined in Section 50.2 need not meet the requirements of paragraph (c)(1) of this section, Provided:

(i) In the event of postulated failure of the component during normal reactor operation, the reactor can be shut down and cooled down in an orderly manner, assuming makeup is provided by the reactor coolant makeup system; or

(ii) The component is or can be isolated from the reactor coolant system by two valves in series (both closed, both open, or one closed and the other open). Each open valve must be capable of automatic actuation and, assuming the other valve is open, its closure time must be such that, in the event of postulated failure of the component during normal reactor operation, each valve remains operable and the reactor can be shut down and cooled down in an orderly manner, assuming makeup is provided by the reactor coolant makeup system only."

The piping systems and their associated components connected to the reactor coolant pressure boundary and less than 1 inch in diameter were constructed to the requirements of ASME Code, Section III, Subsection NC, and identified as Safety Class 2 for Inservice Inspection. The associated components and component parts are identified by valve number and listed below (Table PT-001-1). These piping systems shall be pressurized during the Class 1 Reactor Coolant Pressure Boundary System Leakage Test and a VT-2 Visual Examination will be performed. The System Leakage Test frequency and pressure will be that required for a Class 2 System Leakage Test. Although the system will not have been in operation for four hours prior to commencing the examinations, the time required to bring the reactor coolant system up to test pressure will allow for the detection of leakage.

Within ASME Section XI, the test conditions (i.e., pressure, temperature and hold time) between the Reactor Coolant Pressure Boundary and other safety systems are different. Although there are differences, all the System Leakage Tests ensure leak tightness. Therefore, the substitution of IWA-5213(a) for IWA-5213(c) and the substitution of IWB-5210(a)(1) for IWC-5210(a)(2) satisfies the intent of the Code.

6. Duration of Proposed Alternative

This alternative is being requested for the 3rd 10-year ISI Interval, which will expire May 17, 2019.

7. Precedents

The NRC (reference TAC No. MA3437, dated 11/22/99) approved revision 1 of this alternative request, which requested similar alternatives for the subject welds for Perry's second 10-year inspection interval.

Perry Nuclear Power Plant Unit 1
RELIEF REQUEST #PT-001, Rev. 2

Table #PT-001-1

Valve No.	Description	P&ID No.
1B33-F068A/B	Recirc Pump A/B Discharge Valve Vent	D-302-601, 602
1B33-F070A/B	Recirc Pump A/B Discharge Valve Drain	D-302-601, 602
1B33-F065A/B	Recirc Loop A/B FCV Drain	D-302-601, 602
1B33-F647A/B	Recirc Loop A/B FCV Vent	D-302-601, 602
1B33-F686A/B	Recirc Loop A/B FCV Drain	D-302-601, 602
1B33-F027A/B	Recirc Pump A/B Suction Valve Drain	D-302-601, 602
1B33-F503A/B -F504A/B	Instrument Isolation Valves for dPT-N015A/B, Respectively	D-302-602
1B33-F505A -F506A	Instrument Isolation Valves for FT-N014C/D	D-302-602
1B33-F505B -F506B	Instrument Isolation Valves for FT-N011B and FT-N024C/D	D-302-602
1B33-F507A -F508A	Instrument Isolation Valves for FT-N011A and FT-N014A/B	D-302-602
1B33-F507B -F508B	Instrument Isolation Valves for FT-N024A/B	D-302-602
1B33-F512A/B	Recirc Pump A/B Diff Pressure Instrument Vent	D-302-602
1B33-F513A/B	Recirc Pump A/B Diff Pressure Instrument Vent	D-302-602
1B33-F577	Recirc Loop B Flow Instrument Vent	D-302-602
1B33-F578	Recirc Loop B Flow Instrument Vent	D-302-602
1B33-F579	Recirc Loop A Flow Instrument Vent	D-302-602
1B33-F580	Recirc Loop A Flow Instrument Vent	D-302-602
1B33-F581	Recirc Loop B Flow Instrument Vent	D-302-602
1B33-F582	Recirc Loop B Flow Instrument Vent	D-302-602
1B33-F583	Recirc Loop A Flow Instrument Vent	D-302-602
1B33-F584	Recirc Loop A Flow Instrument Vent	D-302-602
1B33-F059	Recirc System Sample Isolation	D-302-602
1B33-F019	Reactor Water Sample Isolation	D-302-602
1B33-F110	Rx Recirc Sample Line Drain	D-302-602
1G33-F507	Instrument Isolation Valve for FT-N037	D-302-671
1G33-F523	RWCU Bottom Head Flow Instrument Vent	D-302-671
1B21-F596	1B21-F016 Test Connection Root Valve	D-302-121
1B21-F017	MST Drain and MSIV Bypass Line Drain	D-302-121
1N27-F551A/B/C	Feedwater Header A Branch Test Isolation	D-302-082
1N27-F551D/E/F	Feedwater Header B Branch Test Isolation	D-302-082
1N27-F557A/B	Feedwater Header A/B First Test Connection	D-302-082
1G33-F508A/B	Instrument Isolation Valves for PT-N076A, PT-N076B	D-302-671, 962
1G33-F108	Pen 131 INBD Test Conn First Isolation Valve	D-302-671
1E31-F540B	RWCU Diff Flow LD Low Side Test Connection	D-302-962
1E31-F541B	RWCU Diff Flow LD High Side Test Connection	D-302-962
1E51-F528A/B/C/D	Instrument Isolation Valves for PT-N084A/B, PT-N085A/B	D-302-632, 961

Perry Nuclear Power Plant Unit 1
RELIEF REQUEST #PT-001, Rev. 2

Valve No.	Description	P&ID No.
1E31-F542A/B	RCIC/RHR ST Supply LD Low Stby Test Conn	D-302-961
1E31-F543A/B	RCIC/RHR ST Supply LD High Stby Test Conn	D-302-961
1E31-N084B-G	Cross-Tie Low Side PT-N084A/B	D-302-961
1E31-N084B-R	Cross-Tie High Side PT-N084A/B	D-302-961
1E31-F519	Instrument Isolation Valve For PT-N080A	D-302-705, 962
1E31-F545A	RHR A to LPCS LD High Side Test Connection	D-302-962
1E31-F523	Instrument Isolation Valve for PT-N081	D-302-701, 962
1E31-F547	HPCS to SLC Ref Diff Pressure Test Connection	D-302-962
1E31-F520	Instrument Isolation Valve for PT-N080A	D-302-642, 962
1E31-F544A	RHR A to LPCS LD Low Side Test Connection	D-302-962
1E31-F521	Instrument Isolation Valve for PT-N080B	D-302-642, 962
1E31-F522	Instrument Isolation Valve for PT-N080B	D-302-642, 962
1E21-F502	LPCS to Rx Line Test Connection	D-302-705
1E22-F501	HPCS to Rx Line Test connection	D-302-701
1C41-F501	SLC Discharge Line Inboard Drywell Drain Vlv	D-302-691
1E12-F508A	LPCI From RHR A Inbd First Test Connection	D-302-642
1E12-F508B	LPCI From RHR B Inbd First Test Connection	D-302-642
1E12-F508C	LPCI From RHR C Inbd First Test Connection	D-302-642
1E12-F501	Shutdown Cooling Suction Hdr Inbd First Conn	D-302-642
1E51-F072	RHR & RCIC Steam Supply Line Test Connection	D-302-632
1B33-F514	Recirc Jet Pump 15 Flow Instrument Vent	D-302-604
1B33-F515	Recirc Jet Pump 12 Flow Instrument Vent	D-302-604
1B33-F516	Recirc Jet Pump 18 Flow Instrument Vent	D-302-604
1B33-F517	Recirc Jet Pump 19 Flow Instrument Vent	D-302-604
1B33-F518	Recirc Jet Pump 15 Flow Instrument Vent	D-302-604
1B33-F519	Recirc Jet Pump 16 Flow Instrument Vent	D-302-604
1B33-F520	Recirc Jet Pump 11 Flow Instrument Vent	D-302-604
1B33-F521	Recirc Jet Pump 17 Flow Instrument Vent	D-302-604
1B33-F522	Recirc Jet Pump 13 Flow Instrument Vent	D-302-604
1B33-F523	Recirc Jet Pump 20 Flow Instrument Vent	D-302-604
1B33-F524	Recirc Jet Pump 20 Flow Instrument Vent	D-302-604
1B33-F525	Recirc Jet Pump 14 Flow Instrument Vent	D-302-604
1B33-F526	Recirc Jet Pump 15 Flow Instrument Root FT-N038B, LT-N044D	D-302-604
1B33-F527	Recirc Jet Pump 12 Flow Instrument Root FT-N037F	D-302-604
1B33-F528	Recirc Jet Pump 18 Flow Instrument Root FT-N037M	D-302-604
1B33-F529	Recirc Jet Pump 19 Flow Instrument Root FT-N037S	D-302-604
1B33-F530	Recirc Jet Pump 15 Flow Instrument Root FT-N037U, FT-N038B	D-302-604
1B33-F531	Recirc Jet Pump 16 Flow Inst Root FT-N037D	D-302-604
1B33-F532	Recirc Jet Pump 11 Flow Inst Root FT-N037B	D-302-604
1B33-F533	Recirc Jet Pump 17 Flow Inst Root FT-N037H	D-302-604
1B33-F534	Recirc Jet Pump 13 Flow Inst Root FT-N037K	D-302-604
1B33-F535	Recirc Jet Pump 20 Flow Inst Root FT-N038D	D-302-604
1B33-F536	Recirc Jet Pump 20 Flow Inst Root FT-N037W, FT-N038D	D-302-604

Perry Nuclear Power Plant Unit 1
RELIEF REQUEST #PT-001, Rev. 2

Valve No.	Description	P&ID No.
1B33-F537	Recirc Jet Pump 14 Flow Inst Root FT-N037P	D-302-604
1B33-F646	Jet Pump Post Accident Sample Isolation	D-302-604
1P87-F001	Reactor Recirc B Sample Isolation Valve	D-302-431
1B33-F538	Recirc Jet Pump 7 Flow Instrument Vent	D-302-603
1B33-F539	Recirc Jet Pump 9 Flow Instrument Vent	D-302-603
1B33-F540	Recirc Jet Pump 10 Flow Instrument Vent	D-302-603
1B33-F541	Recirc Jet Pump 1 Flow Instrument Vent	D-302-603
1B33-F542	Recirc Jet Pump 2 Flow Instrument Vent	D-302-603
1B33-F543	Recirc Jet Pump 5 Flow Instrument Vent	D-302-603
1B33-F544	Recirc Jet Pump 3 Flow Instrument Vent	D-302-603
1B33-F545	Recirc Jet Pump 10 Flow Instrument Vent	D-302-603
1B33-F546	Recirc Jet Pump 5 Flow Instrument Vent	D-302-603
1B33-F547	Recirc Jet Pump 4 Flow Instrument Vent	D-302-603
1B33-F548	Recirc Jet Pump 6 Flow Instrument Vent	D-302-603
1B33-F549	Recirc Jet Pump 8 Flow Instrument Vent	D-302-603
1B33-F550	Recirc Jet Pump 7 Flow Instrument Root FT-N037G	D-302-603
1B33-F551	Recirc Jet Pump 9 Flow Instrument Root FT-N037R	D-302-603
1B33-F552	Recirc Jet Pump 10 Flow Instrument Root FT-N037V, FT-N038C	D-302-603
1B33-F553	Recirc Jet Pump 1 Flow Instrument Root FT-N037A	D-302-603
1B33-F554	Recirc Jet Pump 2 Flow Instrument Root FT-N037E	D-302-603
1B33-F555	Recirc Jet Pump 5 Flow Instrument Root FT-N038A, LT-N044C	D-302-603
1B33-F556	Recirc Jet Pump 3 Flow Instrument Root FT-N037J	D-302-603
1B33-F557	Recirc Jet Pump 10 Flow Instrument Root FT-N038C	D-302-603
1B33-F558	Recirc Jet Pump 5 Flow Instrument Root FT-N037T, FT-N038A	D-302-603
1B33-F559	Recirc Jet Pump 4 Flow Instrument Root FT-N037N	D-302-603
1B33-F560	Recirc Jet Pump 6 Flow Instrument Root FT-N037C	D-302-603
1B33-F561	Recirc Jet Pump 8 Flow Instrument Root FT-N037L	D-302-603
1B33-F570	Jet Pump Flow Instrument Vent	D-302-603
1B33-F571	Jet Pump Flow Instrument Isolation FT-N037G, FT-N037R, FT-N037V, FT-N037A, FT-N037E, FT-N037J, FT-N037T, FT-N037N, FT-N037C, FT-N037L	D-302-603
1B33-F645	Jet Pump Post Accident Sample Isolation	D-302-603
1P87-F007	Reactor Recirc A Sample Isolation Valve	D-302-431
1E31-F503 -F504	Instrument Isolation Valves for PT-N003A, PT-N086A, PT-N086B	D-302-961

Perry Nuclear Power Plant Unit 1
RELIEF REQUEST #PT-001, Rev. 2

Valve No.	Description	P&ID No.
1E31-F505 -F506	Instrument Isolation Valves for PT-N086C, PT-N086D	D-302-961
1E31-F507 -F508	Instrument Isolation Valves for PT-N003B, PT-N087A, PT-N087B	D-302-961
1E31-F509 -F510	Instrument Isolation Valves for PT-N087C, PT-N087D	D-302-961
1E31-F570	Main Steam Line A Flow Instrument Test Conn	D-302-961
1E31-F571	Main Steam Line A Flow Instrument Test Conn	D-302-961
1E31-F572	Main Steam Line A Flow Instrument Test Conn	D-302-961
1E31-F573	Main Steam Line A Flow Instrument Test Conn	D-302-961
1E31-F574	Main Steam Line B Flow Instrument Test Conn	D-302-961
1E31-F575	Main Steam Line B Flow Instrument Test Conn	D-302-961
1E31-F576	Main Steam Line B Flow Instrument Test Conn	D-302-961
1E31-F577	Main Steam Line B Flow Instrument Test Conn	D-302-961
1E31-F511 -F512	Instrument Isolation Valves for PT-N088A, PT-N088B	D-302-961
1E31-F513 -F514	Instrument Isolation Valves for PT-N003C, PT-N088C, PT-N088D	D-302-961
1E31-F515 -F516	Instrument Isolation Valves for PT-N089A, PT-N089B	D-302-961
1E31-F517 -F518	Instrument isolation Valves for PT-N003D, PT-N089C, PT-N089D	D-302-961
1E31-F578	Main Steam Line C Flow Instrument Test Conn	D-302-961
1E31-F579	Main Steam Line C Flow Instrument Test Conn	D-302-961
1E31-F580	Main Steam Line C Flow Instrument Test Conn	D-302-961
1E31-F581	Main Steam Line C Flow Instrument Test Conn	D-302-961
1E31-F582	Main Steam Line D Flow Instrument Test Conn	D-302-961
1E31-F583	Main Steam Line D Flow Instrument Test Conn	D-302-961
1E31-F584	Main Steam Line D Flow Instrument Test Conn	D-302-961
1E31-F585	Main Steam Line D Flow Instrument Test Conn	D-302-961
1B21-F512	Instrument Isol Valve for LT-N027, LT-N017	D-302-606
1B21-F514	Instrument Isol Valve for LT-N095B, PT-N403B, PI-R004B, PT-N058, PT-N403F, PT-N068B, PT-N008B, PT-N068F, PT-N040, PT-N078B, PT-N062B, PT-N004B, LT-N080B, LT-N490, LT-N091B, LT-N402B, LT-N091F, dPI-R009B, LT-N081B	D-302-606
1B21-R011 B-H	Reference Leg Fill Line	D-302-607, 803-010-136
1B21-R011 B-G	Reference Leg Fill Line	D-302-607
1B21-F510	Instrument Isolation Valve for PT-N078D, LT-N080D, LT-N073L, LT-N073R, LT-N081D, LT-N402F, LT-N044D	D-302-606
1B21-R011 D-H	Reference Leg Fill Line	D-302-607, 803-010-144
1B21-R011 D-G	Reference Leg Fill Line	D-302-607
1B21-F542	RPV Level Instrument Line Drain	D-302-606
1B21-F511	Instrument Isolation Valve for LT-N080D, dPI-R005	D-302-606
1B21-F544	RPV Level Instrument Line Vent	D-302-606
1B21-F546	RPV Level Instrument Line Drain D-302-606	

Perry Nuclear Power Plant Unit 1
RELIEF REQUEST #PT-001, Rev. 2

Valve No.	Description	P&ID No.
1B21-F515	Instrument Isolation Valve for LT-N080B, LT-N004, LT-N017, LT-N027, LT-N095B	D-302-606
1B21-F551	RPV Level Instrument Line Vent	D-302-606
1B21-F540	RPV Level Instrument Line Drain	D-302-606
1B21-F545	RPV Level Instrument Line Vent	D-302-606
1B21-F509	Instrument Isolation Valve for LT-N073L, LT-N073R, LT-N081D, LT-N402F	D-302-606
1B21-F548	RPV Level Instrument Line Drain	D-302-606
1B21-F549	RPV Level Instrument Line Vent	D-302-606
1B21-F513	Instrument Isolation Valve for LT-N081B, LT-N091F, dPI-R009B, LT-N402B, LT-N091B	D-302-606
1B21-F583	Instrument Isolation Valve for PT-N081, dPT-N032	D-302-606, 962
1B21-F582	Jet Pump Instrument Line Vent	D-302-606
1B21-F585	Instrument Isolation Valve For dPT-N011, dPT-N008	D-302-606, 872
1B21-F523	Instrument Isolation Valve for Flow Instruments P009, dPI-R005, LT-N490, dPT-N032, FT-N037, FT-N032, dPI-R005	D-302-606, 604, 671
1B21-F584	Jet Pump Instrument Line Vent	D-302-606
1B21-F553	Instrument Isolation Valve for LT-N095A, PT-N403A, PI-R004A, PT-N403E, PT-N005, PT-N068A, PT-N050, PT-N068E, PT-N006, PT-N008A, PT-N078A, PT-N062A, LT-N004A, LT-N080A, LT-N010, LT-N091A, LT-N402A, dPI-R009A, LT-N091E, LT-N081A	D-302-606
1B21-R011 A-H	Reference Leg Fill Line	D-302-607, 803-010-132
1B21-R011 A-G	Reference Leg Fill Line	D-302-607
1B21-F505	Instrument Isolation Valves for LT-N080C, PT-N078C, LT-N004C, LT-N073G, LT-N402E, LT-N073C, LT-N081C, LT-N044C	D-302-606
1B21-R011 C-H	Reference Leg Fill Line	D-302-607, 803-010-140
1B21-R011 C-G	Reference Leg Fill Line	D-302-607
1B21-F536	RPV Level Instrument Line Drain	D-302-606
1B21-F506	Instrument Isolation Valve for LT-N080C, LT-N004C	D-302-606
1B21-F539	RPV Level Instrument Line Vent	D-302-606
1B21-F528	RPV Level Instrument Line Drain	D-302-606
1B21-F552	Instrument Isolation Valve for LT-N080A, LT-N004A, LT-N095A	D-302-606
1B21-F533	RPV Level Instrument Line Vent	D-302-606
1B21-F535	RPV Level Instrument Line Drain	D-302-606
1B21-F504	Instrument Isolation Valves for LT-N081C, LT-N073C, LT-N402E, LT-N073G	D-302-606
1B21-F534	RPV Level Instrument Line Vent	D-302-606
1B21-F529	RPV Level Instrument LIne Drain	D-302-606
1B21-F555	Instrument Isolation Valve for LT-N081A, LT-N091E, dPI-R009A, LT-N402A, LT-N091A, LT-N010	D-302-606
1B21-F531	RPV Level Instrument Line Vent	D-302-606

10.0 CALIBRATION STANDARD DRAWINGS

10.1 Calibration Standards

Included in this section is a listing of NDE calibration standards required to perform ultrasonic examinations on piping and components subject to the examination requirements of ASME Section XI.

The UT calibration standard design and material selection is in accordance with the requirements of ASME Section V and XI as applicable. In addition to the required notches, drilled holes have been installed as additional reflectors in accordance with the provisions of the applicable Codes.

The actual drawings are not included in this document. They are included in PNPP's drawing control system.

Table 10-1 is a listing of the calibration standards required in the performance of reactor vessel examinations.

Table 10-2 is a listing of the calibration standards required in the performance of examinations on piping and components other than the reactor vessel.

TABLE 10-1

CALIBRATION STANDARDS (REACTOR VESSEL)

TITLE	NOMINAL WALL THICKNESS	MATERIAL SPECIFICATION	DRAWING NO.
PY-SE-CS-1	.755″	SA105	4549-08-899
PY-SE-BI-1	.755″	SA508 C1-1 & SA336 C1-F8	4549-08-907
PY-SE-BI-2	.890″	SA508 C1-1 & SB166	4549-08-905
PY-SE-BI-3	1.145″	SA508 C1-1 & SB166	4549-08-916
PY-SE-BI-4	1.258″	SA508 C1-1 & SA182 F316L	4549-08-915
PY-SE-BI-5	1.498″	SA508 C1-1 & SA336 C1-F8	4549-08-906
PY-123-1-RPV	8.0″	SA553 Grade B	4549-08-917
PY-124-1-RPV	7.35″	SA533 Grade B	4549-08-918
PY-125-1-RPV	6.25″	SA533 Grade B	4549-08-919
PY-126-1-RPV	7.375″	SA533 Grade B	4549-08-920
PY-127-1-RPV	3.88″	SA553 Grade B	4549-08-921
PY-128-1-RPV	4.88″	SA553 Grade B	4549-08-922
PY-FLG-1-RPV	7.4″ X 35″	SA553 Grade B	4549-08-911
PY-NUT-1-RPV-A	6.953″	SA540 Grade B24	4549-08-912
PY-STUD-1-RPV-A	6″ Dia.	SA540 Grade B	4549-08-923
PY-IR-5.3	5.3″	SA533 Grade B	4549-08-903
PY-IR-6.6	6.6″	SA533 Grade B	4549-08-903
PY-IR-7.7	7.7″	SA533 Grade B	4549-08-903

TABLE 10-2

CALIBRATION STANDARDS (PIPING AND OTHER COMPONENTS)

TITLE	NOMINAL WALL THICKNESS	MATERIAL SPECIFICATION	DRAWING NO.
PY-4-80-SS	0.400	SA376, TP 347	4549-08-893
PY-4-80-CS	0.337"	SA106, Grade B	4549-08-898
PY-4-XX1-CS-F	0.337"	SA234, WPB	4549-08-893
PY-4-XX1-SS	0.325"	SA358, TP 304	4549-08-893
PY-6-40-CS	.280"	SA106 Grade B	4549-08-893
PY-6-80-CS	0.432"	SA106, Grade B	4549-08-890
PY-6-120-CS	0.562"	SA106, Grade B	4549-08-890
PY-6-XX1-CS-F	0.562"	SA234, WPB	4549-08-893
PY-8-40-CS	.322"	SA106 Grade B	4549-08-893
PY-8-100-CS	0.594"	SA106, Grade B	4549-08-893
PY-8-XX1-CS-F	0.594"	SA234, WPB	4549-08-893
PY-10-40-CS	.365"	SA106 Grade B	4549-08-893
PY-10-80-CS	0.593"	SA106, Grade B	4549-08-890
PY-10-100-CS	0.718"	SA106, Grade B	4549-08-890
PY-10-XX1-CS-F	0.718"	SA234, WPB	4549-08-893
PY-10-XX2-CS-F	1.45"	SA105	4549-08-894
PY-12-40-CS	.406"	SA106 Grade B	4549-08-893
PY-12-80-CS	0.687"	SA106, Grade B	4549-08-890
PY-12-80-SS-F	0.685"	SA403, WP 304 W	4549-08-893
PY-12-100-CS	0.843"	SA106, Grade B	4549-08-890
PY-12-120-CS	1.00"	SA106, Grade B	4549-08-890
PY-12-CLAD-SS	.688"	SA358 TP 304 & Clad-TP E308 L	4549-08-910

TABLE 10-2 (Cont.)

CALIBRATION STANDARDS (PIPING AND OTHER COMPONENTS)

TITLE	NOMINAL WALL THICKNESS	MATERIAL SPECIFICATION	DRAWING NO.
PY-12-PEN-CS-2	6.5" X 3"	SA 105 & SA106 Grade B	Tube Turns Dwg. 70195Y-C153.1
PY-12-STD-CS	.375"	SA106 Grade B	4549-08-893
PY-12-XX1-CS-F	0.688"	SA234, WPB	4549-08-893
PY-12-XX1-SS	0.700"	SA358, TP 304	4549-08-893
PY-12-XX2-CS-F	0.843"	SA234, WPB	4549-08-893
PY-12-XX3-CS-F	1.312"	SA234, WPB	4549-08-894
PY-14-40-CS	.438"	SA106 Grade B	4549-08-893
PY-14-80-CS	0.750"	SA106, Grade B	4549-08-890
PY-14-XX1-CS-F	0.750"	SA234, WPB	4549-08-893
PY-16-40-CS	.500"	SA106 Grade B	4549-08-893
PY-16-100-CS	1.031"	SA106, Grade B	4549-08-891
PY-16-100-SS	1.031"	SA358, TP 304	4549-08-894
PY-16-CLAD-SS	1.03"	SA358 TP 304 & Clad-TP E308 L	4549-08-910
PY-16-STD-CS	.375"	SA106 Grade B	4549-08-893
PY-16-XX1-CS-F	1.031"	SA234, WPB	4549-08-894
PY-18-40-CS	0.562"	SA106, Grade B	4549-08-890
PY-18-STD-CS	0.375"	SA106 Grade B	4549-08-893
PY-18-XX1-CS-F	0.562"	SA234, WPB	4549-08-893
PY-18-XX1-SS-F	0.562"	SA403, WP 304	4549-08-893
PY-20-40-CS	0.594"	SA106, Grade B	4549-08-890
PY-20-80-CS	1.031"	SA106, Grade B	4549-08-891
PY-20-100-CS	1.281"	SA106, Grade B	4549-08-891

TABLE 10-2 (Cont.)

CALIBRATION STANDARDS (PIPING AND OTHER COMPONENTS)

TITLE	NOMINAL WALL THICKNESS	MATERIAL SPECIFICATION	DRAWING NO.
PY-20-120-CS	1.500"	SA106, Grade B	4549-08-894
PY-20-XX1-CS-F	0.594"	SA234, WPB	4549-08-893
PY-20-XX1-SS-F	1.281"	SA182, F 316 L	4549-08-894
PY-22-CLAD-SS	1.0"	SA358 TP 304 & Clad-TP E308 L	4549-08-910
PY-22-XX1-SS	1.006"	SA358, TP 304	4549-08-894
PY-22-XX1-SS-F	1.13"	SA403, WP 304	4549-08-894
PY-22-XX2-SS-F	1.38"	SA403 WP 304 & Clad-TP E308 L	4549-08-913
PY-24-40-CS	0.687"	SA106, Grade B	4549-08-890
PY-24-CLAD-SS	1.315"	SA358 TP 304 & Clad-TP E308 L	4549-08-910
PY-24-STD-CS	0.375"	SA106 Grade B	4549-08-893
PY-24-XX1-CS-F	0.687"	SA234, WPB	4549-08-893
PY-24-XX1-SS	1.386	SA358, TP 304	4549-08-894
PY-24-XX1-SS-F	1.735"	SA403, WP 304	4549-08-894
PY-24-XX2-SS-F	1.400"	SA403, WP 304	4549-08-894
PY-26-80-CS	1.499"	SA155, Grade KCF 70	4549-08-891
PY-26-XXI-CS	1.147"	SA155, Grade KCF 70	4549-08-891
PY-26-XX1-CS-F	1.414"	SA234, WPB	4549-08-894
PY-26-XX2-CS	1.321"	SA106, Grade B	4549-08-891
PY-28-140-CS	2.406"	SA106, Grade C	4549-08-894
PY-1.5-RHR	1.50"	SA516 Grade 70	4549-08-908
PY-IR-RHR	5.3"	SA105	4549-08-902

TABLE 10-2 (Cont.)

CALIBRATION STANDARDS (PIPING AND OTHER COMPONENTS)

TITLE	NOMINAL WALL THICKNESS	MATERIAL SPECIFICATION	DRAWING NO.
PY-STUD-LPCS 2.25 - CS	2.25″	SA193 Grade B7	4549-08-900
PY-STUD-MS-2.25-CS	2.25″	SA540 Grade B23, CL5	4549-08-901
PY-STUD-RR-3 - CS	3.0″	SA540 Grade B23, CLA	4549-08-909
PY-VALVE-XX1-CS	2.2″	SA105	80D7547
PY-VALVE-XX2-CS	1.5″	SA105	80D7547
PY-VALVE-XX3-CS	1.12″	SA105	80D7547
PY-STUD-MS-2.25-CS-1	2.25″	SA540 Grade B23, CL5	4549-08-925

11.0 ISI DRAWINGS

11.1 ISI Piping and Instrumentation Diagrams (P&ID's)

Included in PNPP's drawing control system (305 Series Drawings) are ISI P&ID's delineating the ISI boundaries for piping systems subject to the requirements of ASME Section XI.

The ISI boundary classifications are developed specifically to define the extent of examinations applicable to Section XI. The Section XI Class 1, 2, 3 and MC boundaries differ somewhat from the ASME Section III design boundaries. These differences occur as a result of systems, or portions of systems, being optionally upgraded in design.

The ISI classification boundaries are established by applying the provisions set forth in ASME Section XI, 10CFR50, Regulatory Guide 1.26 Revision 3, and NUREG-0800.

The drawings are color-coded, for ease of use.

For reference, the following table lists the ISI P&ID drawings.

Drawing No.	Sheet(s)	System	System Description
SS-305-0001	0001 - 0005	N/A	Legend and Drawing List
SS-305-0002	0001 - 0004	P47	Control Complex Chilled Water
SS-305-0003	0001	P54	Fire Service Water
SS-305-0004	0001	D17	Plant Radiation Monitoring
SS-305-0005	0001	P54	Fire Service Carbon Dioxide
SS-305-0007	0001	D17	Plant Radiation Monitoring
SS-305-0008	0001	P50	Containment Vessel Chilled Water
SS-305-0010	0001	D17	Liquid System Radiation Monitoring
SS-305-0011	0001	B21,N11	Main Steam
SS-305-0016	0001	M16,M17	Drywell and Containment Vacuum Relief
SS-305-0082	0001	N27	Feedwater
SS-305-0102	0001 & 0002	P11	Condensate Transfer and Storage
SS-305-0121	0001	N22	Main, Reheat, Extraction & Misc. Drains
SS-305-0212	0001	P41	Service Water
SS-305-0214	0001	P49	Emergency Service Water Screen Wash
SS-305-0242	0001	P51	Service Air
SS-305-0243	0001	P52	Instrument Air
SS-305-0244	0001	P52	Parallel Instrument Air
SS-305-0271	0001 & 0002	P57	Safety Related Instrument Air
SS-305-0346	0001 & 0002	R43	Standby Diesel Engine Mounted Piping
SS-305-0351	0001 & 0003	R44	DIV. 1&2 HPCS Diesel Gen. Starting Air
SS-305-0352	0001 & 0002	R45	Standby and HPCS Diesel Gen. Fuel Oil

Drawing No.	Sheet(s)	System	System Description
SS-305-0353	0001 & 0003	R47	Standby and HPCS Diesel Gen. Lube Oil
SS-305-0354	0001 & 0002	R46	Standby and HPCS Diesel Gen. Jacket Water
SS-305-0355	0001 - 0003	R48	Standby and HPCS Diesel Gen. Exh. Intake and Crankcase
SS-305-0356	0001	R45	HPCS Diesel Gen. Fuel Oil
SS-305-0358	0001 & 0002	R44	DIV. 3 HPCS Diesel Gen. Starting Air
SS-305-0359	0001	E22B	HPCS Diesel Generator Lube Oil
SS-305-0360	0001	E22B	HPCS Diesel Generator Cooling Water
SS-305-0431	0001 - 0003	P87	Post Accident Sampling
SS-305-0601	0001 & 0002	B33	Reactor Water Recirculation
SS-305-0602	0001	B33	Reactor Water Recirculation
SS-305-0603	0001	B33	Reactor Water Recirculation
SS-305-0604	0001	B33	Reactor Water Recirculation
SS-305-0605	0001 - 0008	B21	Nuclear Boiler
SS-305-0607	0001	B21	Nuclear Boiler
SS-305-0608	0001	B21	Nuclear Boiler
SS-305-0613	0001	P43	Nuclear Closed Cooling
SS-305-0614	0001 & 0002	M14	Containment Vessel & Drywell Purge
SS-305-0621	0001 & 0002	P42	Emergency Closed Cooling
SS-305-0622	0001 & 0002	P42	Emergency Closed Cooling
SS-305-0623	0001	P42	Emergency Closed Cooling
SS-305-0631	0001	E51	Reactor Core Isolation Cooling
SS-305-0632	0001	E51	Reactor Core Isolation Cooling
SS-305-0641	0001 & 0002	E12	Residual Heat Removal
SS-305-0642	0001 - 0004	E12	Residual Heat Removal
SS-305-0643	0001 & 0002	E12	Residual Heat Removal
SS-305-0651	0001	G41	Fuel Pool Cooling and Clean-Up
SS-305-0653	0001 & 0002	G41	Fuel Pool Filter Demineralizer System
SS-305-0654	0001	G41	Fuel Pool Cooling and Clean-Up
SS-305-0655	0001	G41	Fuel Pool Cooling and Clean-Up
SS-305-0661	0001	E15	Containment Spray
SS-305-0671	0001	G33	Reactor Water Clean-Up
SS-305-0672	0001	G33	Reactor Water Clean-Up
SS-305-0681	0001 & 0002	G42	Suppression Pool Clean-Up System
SS-305-0686	0001	G43	Suppression Pool Make-Up
SS-305-0691	0001	C41	Standby Liquid Control
SS-305-0692	0001	C41	Standby Liquid Control
SS-305-0701	0001	E22	High Pressure Core Spray
SS-305-0705	0001	E21	Low Pressure Core Spray
SS-305-0713	0001	P22	Mixed Bed Demin. and Distribution
SS-305-0737	0001	G50	Liquid Radwaste Disposal
SS-305-0739	0001	G61	Liquid Radwaste Equipment Drain Sumps

Drawing No.	Sheet(s)	System	System Description
SS-305-0740	0001	G61	Liquid Radwaste Equipment Drain Sumps
SS-305-0761	0001	P53	Penetration Pressurization
SS-305-0762	0001 - 0003	P53	Penetration Pressurization & Personnel Airlock Leakage Control
SS-305-0791	0001 & 0002	P45	Emergency Service Water
SS-305-0792	0001 - 0004	P45	Emergency Service Water
SS-305-0811	0001	E61	Containment Integrated Leak Rate Test
SS-305-0831	0001	M51	Combustible Gas Control
SS-305-0832	0001 & 0002	M51	Hydrogen Analysis
SS-305-0871	0001	C11	Control Rod Drive Hydraulics
SS-305-0872	0001	C11	Control Rod Drive Hydraulics
SS-305-0881	0001	D23	Containment Atmosphere Monitoring
SS-305-0950	0001	P86	Nitrogen Supply System
SS-305-0961	0001	E31	Leak Detection
SS-305-0962	0001	E31	Leak Detection
SS-305-0970	0001	F42	Inclined Fuel Transfer
SS-305-0971	0001	N27	Feedwater Leakage Control

11.2 ISI Isometric Drawings

Also included in PNPP's drawing control system (305 Series Drawings) are ISI isometric drawings delineating the components, welds, and supports which are subject to examination (other than VT-2) in accordance with the ISEP.

The ISI isometric drawings are established by applying the rules of ASME Section XI to components and systems which are not exempt from examination.

Each weld, support, and component subject to examination is identified by a unique number. These numbers are included on the isometrics with lines (arrows) identifying the particular item and it's location within a system or component.

For reference, the following table lists the ISI Isometric Drawings.

Drawing No.	Sheet(s)	System	System Description
SS-305-0001	0101	N/A	Legend and Drawing List
SS-305-0002	0101 - 0117	P47	Control Complex Chilled Water System
SS-305-0006	0101 - 0130	B13	Reactor Vessel and Internals
SS-305-0082	0101 - 0106	N27	Feedwater
SS-305-0121	0101 - 0103	N22	Main, Reheat, Extraction & Misc. Drains
SS-305-0214	0101 & 0102	P49	Emergency Service Water Screen Wash
SS-305-0246	0101 - 0103	G40	Alternate Decay Heat Removal
SS-305-0271	0101	P57	Safety Related Instrument Air
SS-305-0351	0101	E22	High Pressure Core Spray System

Drawing No.	Sheet(s)	System	System Description
SS-305-0351	0102 - 0105	R44	Standby Diesel Gen. Starting Air
SS-305-0353	0101 & 0106	R47	Standby and HPCS Diesel Gen. Lube Oil
SS-305-0354	0101 & 0106	R46	Standby and HPCS Diesel Gen. Jacket Water
SS-305-0355	0101	E22	High Pressure Core Spray System
SS-305-0355	0102 - 0109	R48	Standby Diesel Gen. Exhaust, Intake, Crankcase
SS-305-0355	0110 - 0111	R45	Standby Diesel Gen. Fuel Oil System
SS-305-0356	0101	R45	HPCS Diesel Gen. Fuel Oil
SS-305-0503	0101 - 0122 & 0138	T23	Containment Vessel - Interior
SS-305-0503	0123 - 0137 & 0139	T23	Containment Vessel - Exterior
SS-305-0602	0101 - 0105	B33	Reactor Water Recirculation
SS-305-0605	0101 - 0130	B21	Nuclear Boiler
SS-305-0621	0101 - 0113	P42	Emergency Closed Cooling
SS-305-0622	0101 - 0113	P42	Emergency Closed Cooling
SS-305-0631	0101 - 0112	E51	Reactor Core Isolation Cooling
SS-305-0632	0101 - 0105	E51	Reactor Core Isolation Cooling
SS-305-0641	0101 - 0123	E12	Residual Heat Removal
SS-305-0642	0101 - 0149	E12	Residual Heat Removal
SS-305-0643	0101 - 0123	E12	Residual Heat Removal
SS-305-0651	0101 - 0103	G41	Fuel Pool Cooling and Clean-Up
SS-305-0653	0103 - 0113 0115 - 0119	G41	Fuel Pool Filter Demineralizer System
SS-305-0654	0101 - 0108	G41	Fuel Pool Filter Demineralizer System
SS-305-0655	0101 - 0102 & 0114	G42	Suppression Pool Clean-Up System
SS-305-0671	0101 -0108	G33	Reactor Water Clean-Up
SS-305-0672	0101 -0103	G33	Reactor Water Clean-Up
SS-305-0691	0101 & 0102	C41	Standby Liquid Control
SS-305-0701	0101 - 0114	E22	High Pressure Core Spray
SS-305-0705	0101 - 0113	E21	Low Pressure Core Spray
SS-305-0791	0101 - 0113	P45	Emergency Service Water
SS-305-0792	0101 - 0118	P45	Emergency Service Water
SS-305-0871	0101 - 0105	C11	Control Rod Drive Hydraulics
SS-305-0971	0101 & 0102	N27	Feedwater Leakage Control