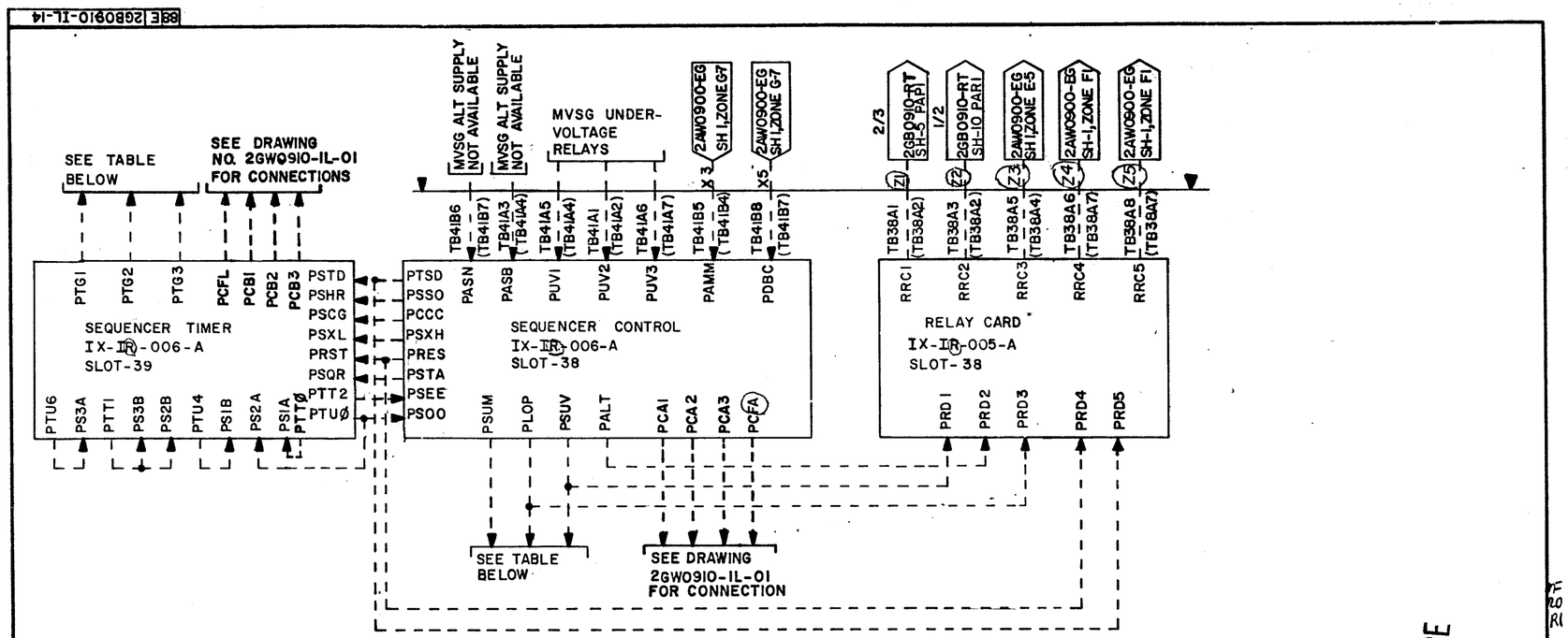

CONTROLLED DEVICE IN IX-IR-006-A	FUNCTION / SLOT						SSCS CID DRAWING NUMBER
	PLOP	PSUM	PSUV	PTG 1	PTG 2	PTG 3	
KC-MPMP-001-A	13	09	13		9 & 13		2GB0910-KC-22
VE-MPMP-271-A	23	23	23			23	-VE-07
* 1NM-MPMP-001-A						29	-NM-01
** 2NM-MPMP-002-A						29	-NM-02
* 0KE-IFCV-055-A	34						-KE-12
KE-MPMP-013-A	36	36	36	36			-KE-14
* 1NB-MPMP-008-A						74	-NB-41
** 2NB-MPMP-006-A						74	-NB-42
VC-MACU-054-A	14						-VC-03
1RJ-MCMP-001-A	47	47	47			47	-RJ-03

* UNIT 1 ONLY ** UNIT 2 ONLY

APERTURE CARD

POWERHOUSE
UNITS 1 & 2

SSCS CIRCUIT
INTERFACE DIAGRAM
LOAD SEQUENCER

BELLEFONTE NUCLEAR PLANT
TENNESSEE VALLEY AUTHORITY
DIVISION OF ENGINEERING DESIGN

Q

KNOXVILLE 88 E 2GB0910-IL-14 R1

Docket # 50-438
Control # 8202080064
Date 8202020
REGULATORY DOCKET FILE