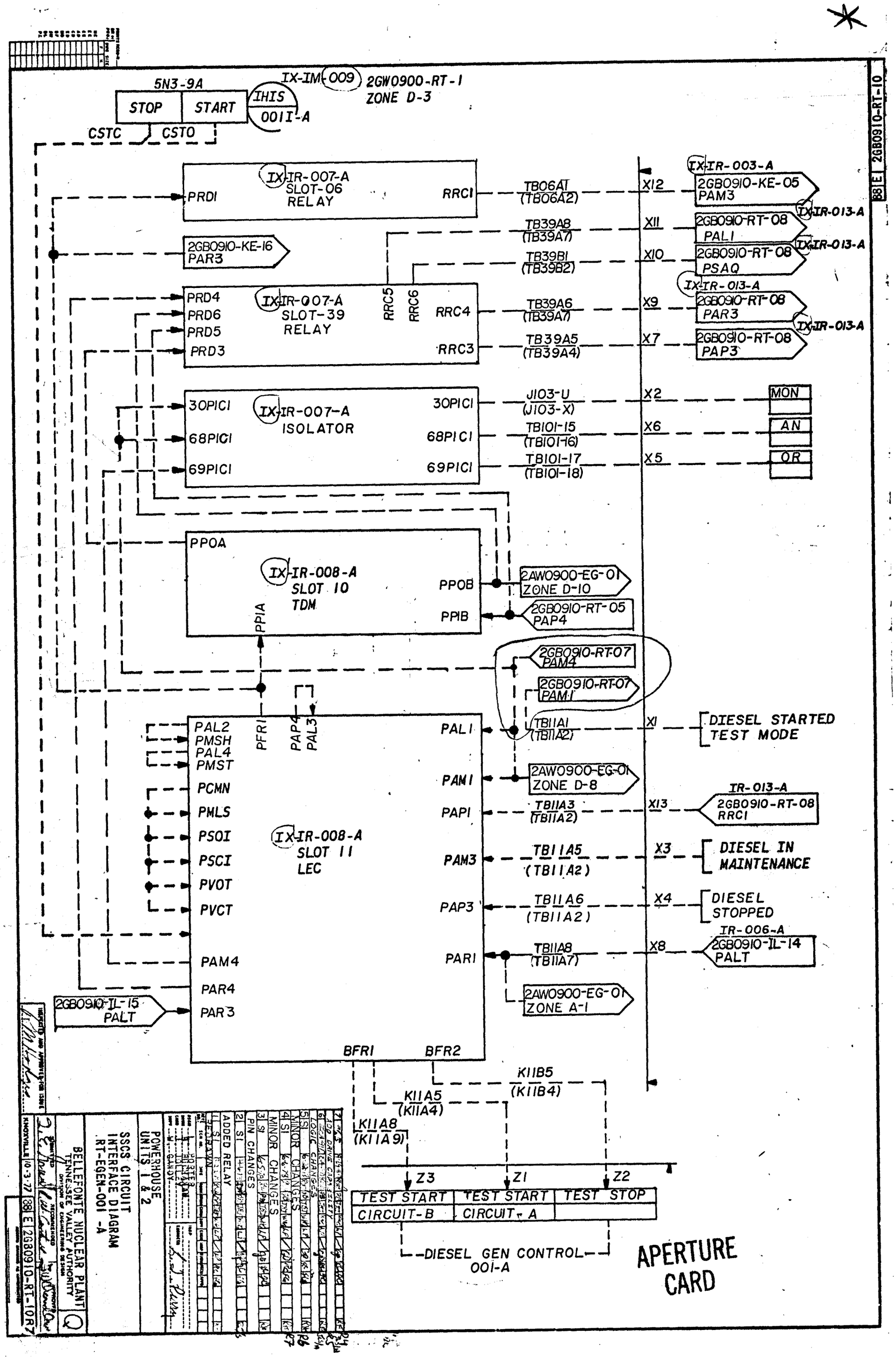
5N3-9A
STOP
START
IHIS
0011-A
CSTC
CSTO
IX-IM-009
2GW0900-RT-1
ZONE D-3
IX-IR-007-A
SLOT-06
RELAY
PRDI
RRCI
2GB0910-KE-16
PAR3
PRD4
PRD6
PRD5
PRD3
RRC5
RRC6
RRC4
RRC3
TB06A1
(TB06A2)
TB39A8
(TB39A7)
TB39B1
(TB39B2)
TB39A6
(TB39A7)
TB39A5
(TB39A4)
IX-IR-003-A
2GB0910-KE-05
PAM3
2GB0910-RT-08
PAL1
PSAQ
PAR3
PAP3
IX-IR-013-A
30PIC1
68PIC1
69PIC1
IX-IR-007-A
ISOLATOR
J103-U
(J103-X)
TB101-15
(TB101-16)
TB101-17
(TB101-18)
MON
AN
OR
PPOA
IX-IR-008-A
SLOT 10
TDM
PPIA
PPOB
PPIB
2AW0900-EG-01
ZONE D-10
2GB0910-RT-05
PAP4
2GB0910-RT-07
PAM4
PAM1
PAL2
PMSH
PAL4
PMST
PCMN
PMLS
PSOI
PSCI
PVOT
PVCT
PAM4
PAR4
PAR3
PFR1
PAP4
PAL3
IX-IR-008-A
SLOT 11
LEC
PAL1
PAM1
PAP1
PAM3
PAP3
PAR1
TB11A1
(TB11A2)
2AW0900-EG-01
ZONE D-8
TB11A3
(TB11A2)
TB11A5
(TB11A2)
TB11A6
(TB11A2)
TB11A8
(TB11A7)
2AW0900-EG-01
ZONE A-1
X1
X13
X3
X4
X8
DIESEL STARTED
TEST MODE
IR-013-A
2GB0910-RT-08
RRC1
DIESEL IN
MAINTENANCE
DIESEL
STOPPED
IR-006-A
2GB0910-IL-14
PALT
2GB0910-IL-15
PALT
BFR1
BFR2
K11B5
(K11B4)
K11A5
(K11A4)
K11A8
(K11A9)
Z3
Z1
Z2
TEST START
TEST START
TEST STOP
CIRCUIT-B
CIRCUIT-A
DIESEL GEN CONTROL
001-A
APERTURE
CARD
BELLEFONTE NUCLEAR PLANT
TENNESSEE VALLEY AUTHORITY
SSCS CIRCUIT
INTERFACE DIAGRAM
RT-EGEN-001 -A
POWERHOUSE
UNITS 1 & 2
2GB0910-RT-10R7
Docket # 50-438
Control # 8202020904
Date 8202022 of Document
REGULATORY DOCKET FILE