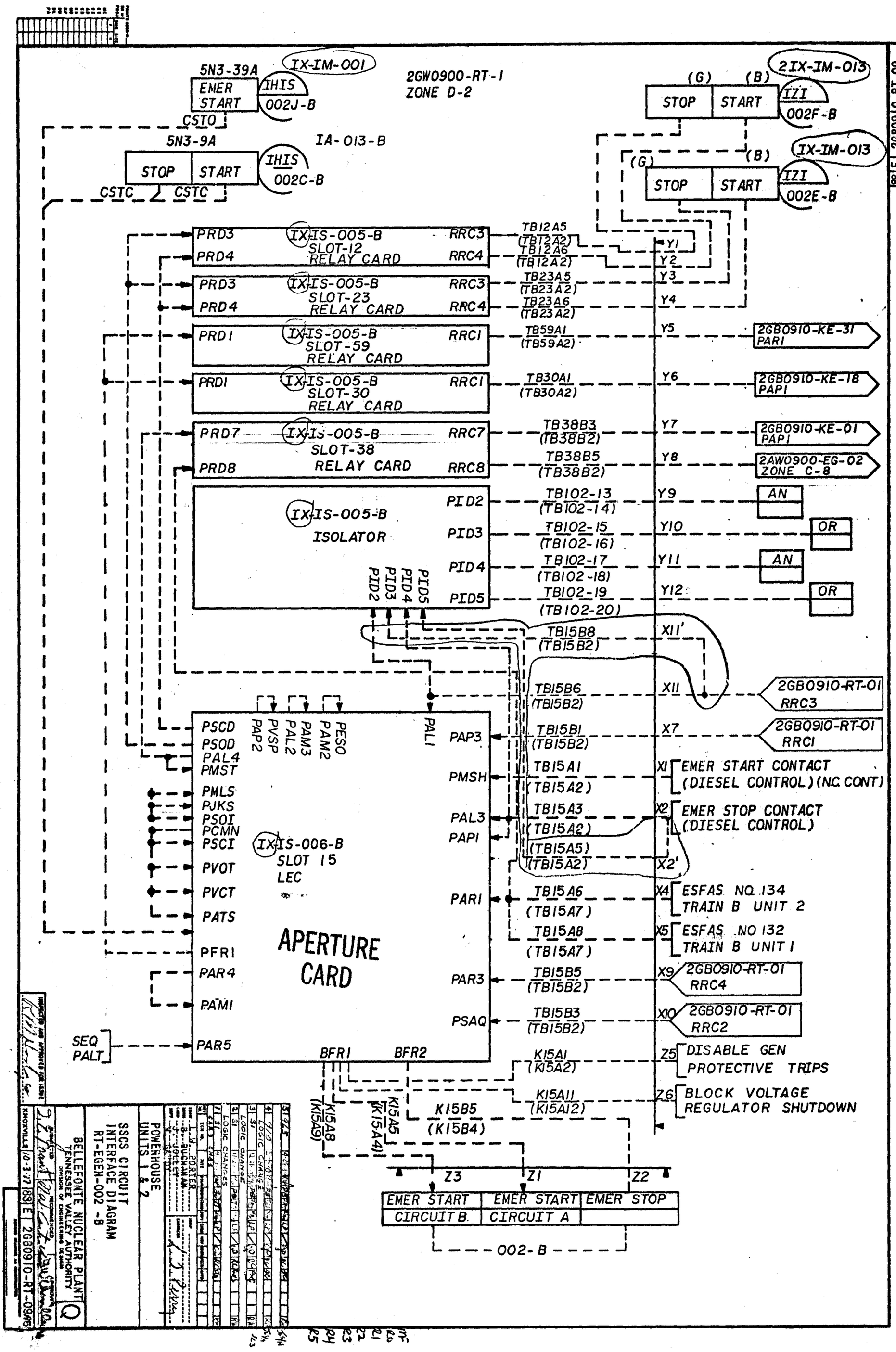

Docket # 50-438
Control #8202080064