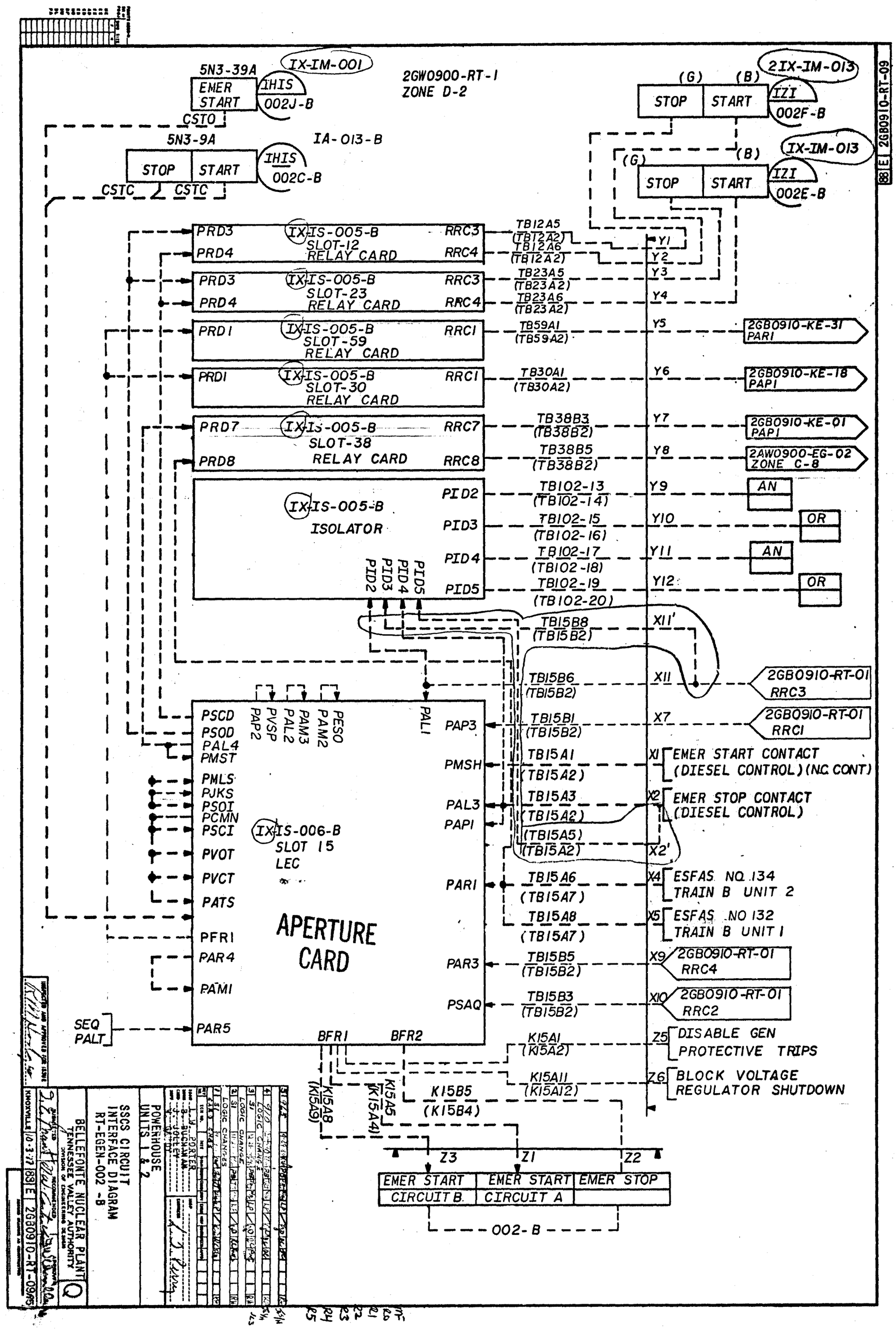

Docket # 50-438
Control # 8202080064
Date 8/22/82 of Document
REGULATORY DOCKET FILE