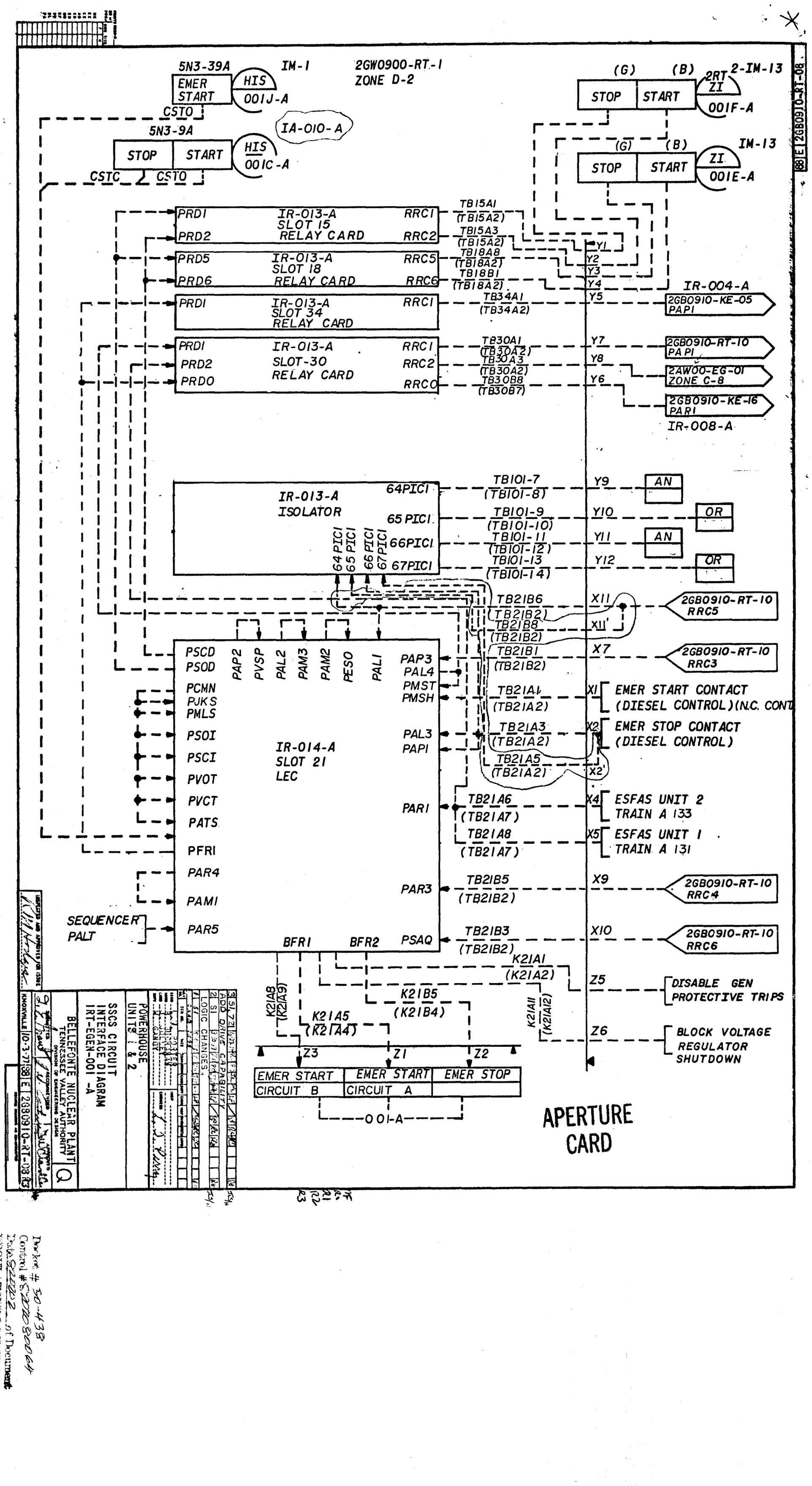
5N3-39A
EMER START
HIS
001J-A
IM-1
2GW0900-RT-1
ZONE D-2
CSTO
5N3-9A
STOP
START
HIS
001C-A
IA-010-A
CSTC
CSTO
(G)
(B)
2RT
ZI
2-IM-13
STOP
START
001F-A
(G)
(B)
IM-13
ZI
STOP
START
001E-A
PRD1
IR-013-A
SLOT 15
RELAY CARD
RRC1
PRD2
RRC2
TB15A1
(TB15A2)
TB15A3
(TB15A2)
PRD5
IR-013-A
SLOT 18
RELAY CARD
RRC5
PRD6
RRC6
TB18A8
(TB18A2)
TB18B1
(TB18A2)
PRD1
IR-013-A
SLOT 34
RELAY CARD
RRC1
TB34A1
(TB34A2)
PRD1
PRD2
PRD0
IR-013-A
SLOT-30
RELAY CARD
RRC1
RRC2
RRC0
TB30A1
(TB30A2)
TB30A3
(TB30A2)
TB30B8
(TB30B7)
Y1
Y2
Y3
Y4
Y5
Y7
Y8
Y6
IR-004-A
2GB0910-KE-05
PAP1
2GB0910-RT-10
PAP1
2AW00-EG-01
ZONE C-8
2GB0910-KE-16
PAR1
IR-008-A
IR-013-A
ISOLATOR
64PIC1
65 PIC1
66PIC1
67PIC1
64 PIC1
65 PIC1
66 PIC1
67PIC1
TB101-7
(TB101-8)
TB101-9
(TB101-10)
TB101-11
(TB101-12)
TB101-13
(TB101-14)
Y9
Y10
Y11
Y12
AN
OR
AN
OR
TB21B6
(TB21B2)
TB21B8
(TB21B2)
X11
X11'
2GB0910-RT-10
RRC5
TB21B1
(TB21B2)
X7
2GB0910-RT-10
RRC3
PSCD
PSOD
PCMN
PJKS
PMLS
PSOI
PSCI
PVOT
PVCT
PATS
PFRI
PAR4
PAMI
PAR5
SEQUENCER
PALT
PAP2
PVSP
PAL2
PAM3
PAM2
PESO
PAL1
PAP3
PAL4
PMST
PMSH
PAL3
PAP1
PAR1
PAR3
PSAQ
IR-014-A
SLOT 21
LEC
TB21A1
(TB21A2)
X1
EMER START CONTACT
(DIESEL CONTROL)(N.C. CONT
TB21A3
(TB21A2)
X2
EMER STOP CONTACT
(DIESEL CONTROL)
TB21A5
(TB21A2)
X2'
TB21A6
(TB21A7)
X4
ESFAS UNIT 2
TRAIN A 133
TB21A8
(TB21A7)
X5
ESFAS UNIT 1
TRAIN A 131
TB21B5
(TB21B2)
X9
2GB0910-RT-10
RRC4
TB21B3
(TB21B2)
X10
2GB0910-RT-10
RRC6
BFR1
BFR2
K21A1
(K21A2)
Z5
DISABLE GEN
PROTECTIVE TRIPS
K21A8
(K21A9)
K21B5
(K21B4)
K21A5
(K21A4)
K21A11
(K21A12)
Z6
BLOCK VOLTAGE
REGULATOR
SHUTDOWN
Z3
Z1
Z2
EMER START
CIRCUIT B
EMER START
CIRCUIT A
EMER STOP
001-A
APERTURE
CARD
BELLEFONTE NUCLEAR PLANT
TENNESSEE VALLEY AUTHORITY
DIVISION OF ENGINEERING DESIGN
SSCS CIRCUIT
INTERFACE DIAGRAM
IRT-EGEN-001 -A
POWERHOUSE
UNITS 1 & 2
LOGIC CHANGES
ADD DRIVE CAPABILITY
KNOXVILLE
10-3-77
2GB0910-RT-08
Docket # 50-438
Control # 8200800064
Date 8/28/82 of Document
REGULATORY DOCKET FILE