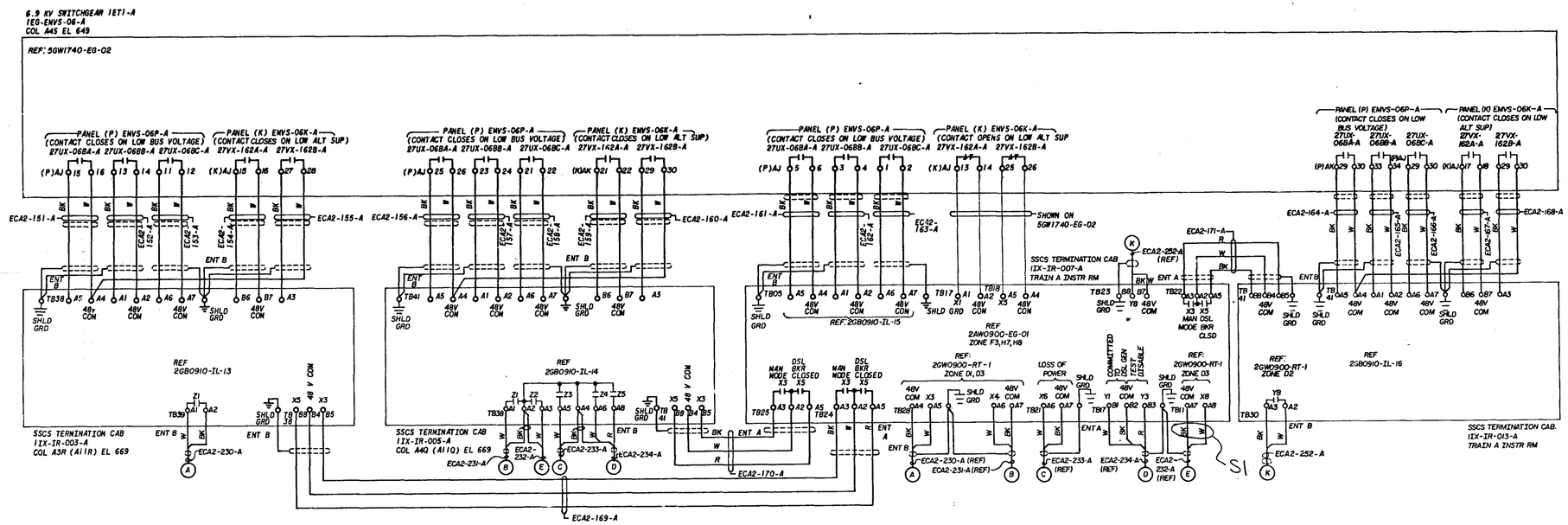

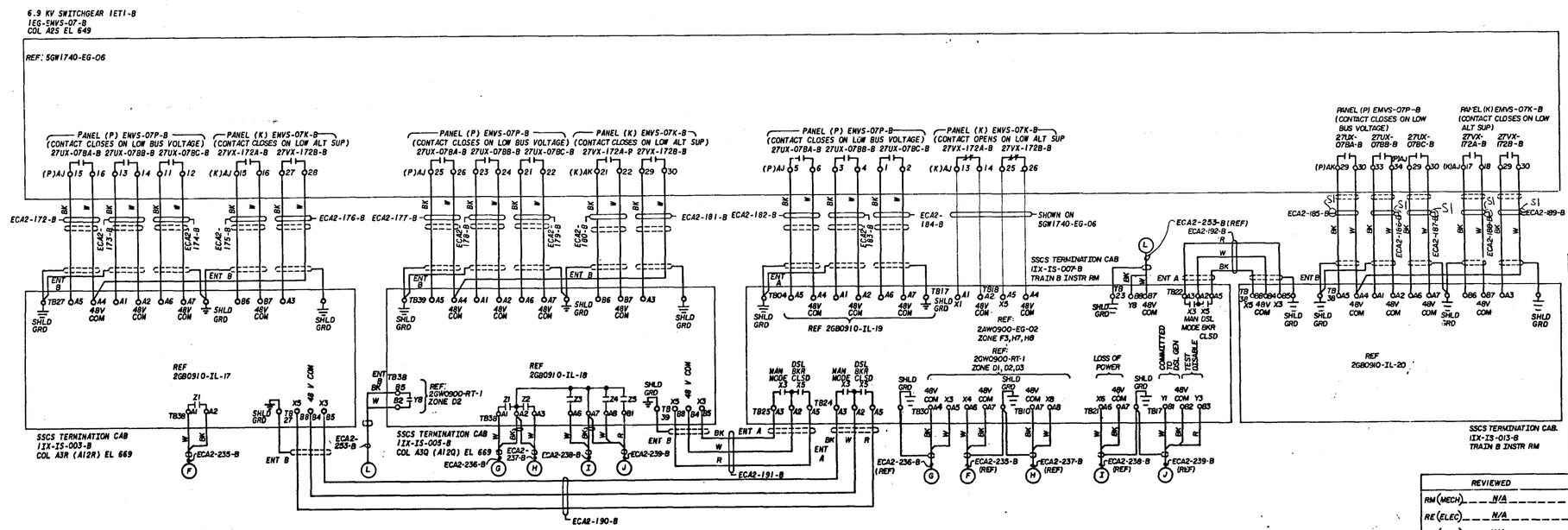

NOTES:

1. ALL INPUTS TO SSCS CABINETS SHOWN ON THIS SHEET ARE RELATED TO THE SEQUENCER.
2. FOR GENERAL NOTES SEE SHEET 1.

APERTURE CARD

Docket # [illegible]
Control # 8202080064
Date 820202 of Document
REGULATORY DOCKET FILE

REV NO.	ECN NO.	DATE	DSGN	DRWN	CHKD	SUPV	ENGR	INSP	SUBM	RECM	APPD
2	S1	10-10-79	[illegible]	[illegible]	[illegible]	[illegible]	[illegible]	[illegible]	[illegible]	[illegible]	[illegible]
REVERSED WIRE COLOR. ADDE: LEADERS TO CABLE NO'S.											
1	488, S1	4-24-79	[illegible]	[illegible]	[illegible]	[illegible]	[illegible]	[illegible]	[illegible]	[illegible]	[illegible]
REVISED SLOT ASSIGNMENTS, UPDATE TO CURRENT FCLD STATUS.											

DSGN R.H. Thomas
DRWN F.M. THOMAS
CHKD [illegible]
SUPV [illegible]
INSP
ENGINEER M.W. Stevenson

SCALE EXCEPT AS NOTED

GENERAL
UNITS 1 & 2

SCHEMATIC DIAGRAM
SOLID STATE CONTROL SYSTEM

BELLEFONTE NUCLEAR PLANT
TENNESSEE VALLEY AUTHORITY
DIVISION OF ENGINEERING DESIGN

Q

SUBMITTED M.W. Stevenson
RECOMMENDED [illegible]
APPROVED R.M. Hodges

KNOXVILLE 4-25-78 88 E 5GW0640-IL-07 R2

RECORD DRAWING AS CONSTRUCTED

REVIEWED
RM (MECH) N/A
RE (ELEC) N/A
RC (CIVIL) N/A
INSPECTED AND APPROVED FOR ISSUE

PRINT H 3
SIZE F 0
BR OR PROJ BE EE CE AD CD ED MD NP SB SL PA
PRINTS REQD-R