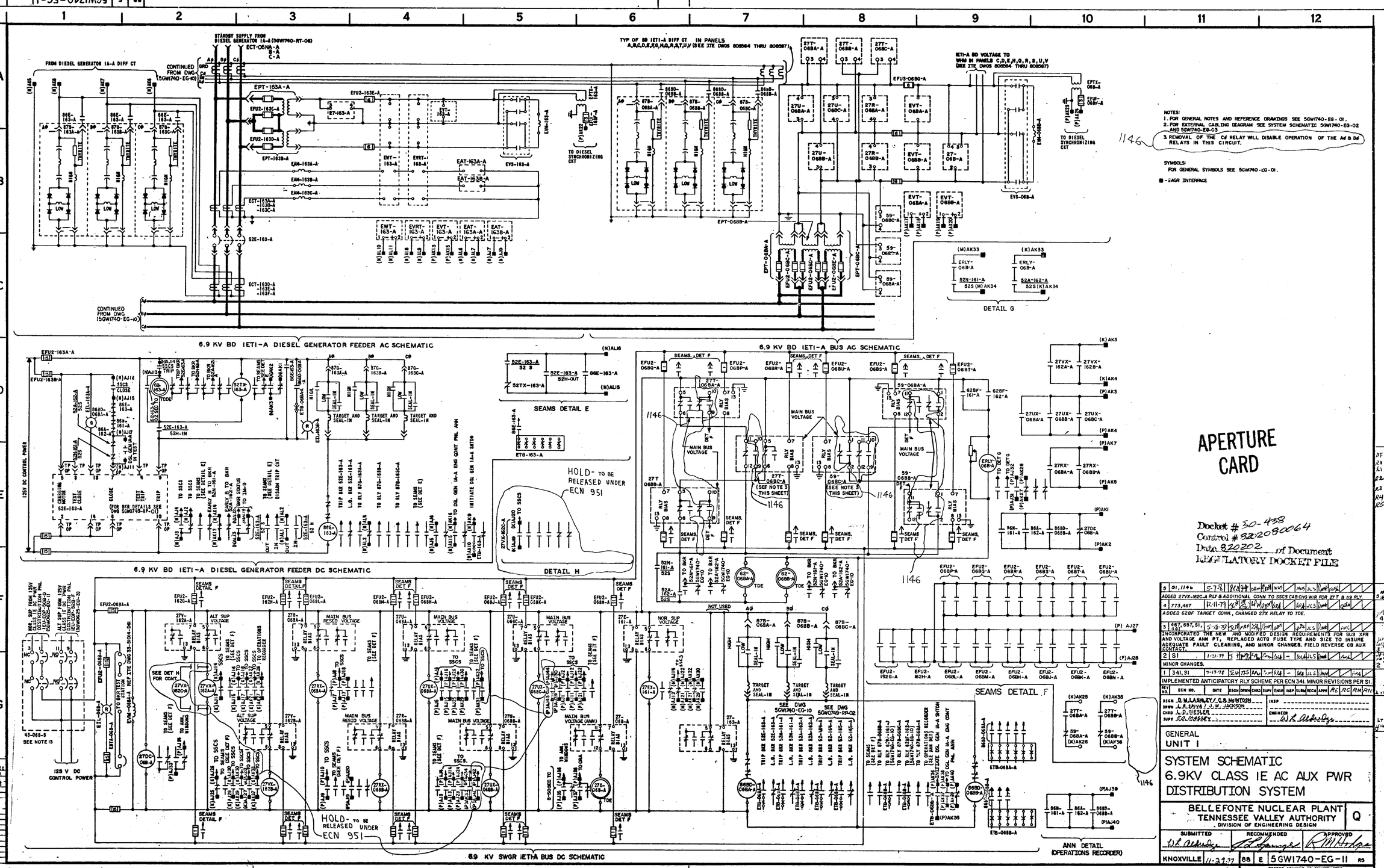

NOTES:
1. FOR GENERAL NOTES AND REFERENCE DRAWINGS SEE 5GW1740-EG-01.
2. FOR EXTERNAL CABLING DIAGRAM SEE SYSTEM SCHEMATIC 5GW1740-EG-02 AND 5GW1740-EG-03
3. REMOVAL OF THE Cd RELAY WILL DISABLE OPERATION OF THE Ad & Bd RELAYS IN THIS CIRCUIT. 1146

SYMBOLS:
FOR GENERAL SYMBOLS SEE 5GW1740-EG-01.
■ - SWGR INTERFACE

APERTURE CARD

Docket # 50-438
Control # 8202080064
Date 820202 of Document
REGULATORY DOCKET FILE

5	31, 1146	5-7-81		
	ADDED 27VX-162C-A RLY & ADDITIONAL CONN TO SSCS CAB CHG WIR FOR 27T & 59 RLY.			
4	773, 467	12-11-79		
	ADDED 62BF TARGET CONN, CHANGED 27X RELAY TO TDE.			
3	467, 657, 31, 1321	5-18-79		
	INCORPORATED THE NEW AND MODIFIED DESIGN REQUIREMENTS FOR BUS XFR AND VOLTAGE ANN PT, REPLACED ACTO FUSE TYPE AND SIZE TO INSURE ADEQUATE FAULT CLEARING, AND MINOR CHANGES. FIELD REVERSE CB AUX CONTACT.			
2	31	1-31-79		
	MINOR CHANGES.			
1	341, 31	7-17-78		
	IMPLEMENTED ANTICIPATORY RLY SCHEME PER ECN 341. MINOR REVISIONS PER 31.			

REV NO.	ECN NO.	DATE	DSGN	DRWN	CHKD	SUPV	ENGR	INSP	SUBM	RECM	APPR
									RC	RC	RM

DSGN D.W.LARKBURY / G.S.McINTOSH
DRWN J.P.BRYAN / J.W.JACKSON
CHKD J.D.DIESLER
SUPV 52-108556X
INSP
ENGINEER W.L. Ashby

GENERAL
UNIT 1

SYSTEM SCHEMATIC 6.9KV CLASS 1E AC AUX PWR DISTRIBUTION SYSTEM

BELLEFONTE NUCLEAR PLANT
TENNESSEE VALLEY AUTHORITY
DIVISION OF ENGINEERING DESIGN

Q

SUBMITTED W.L. Ashby | RECOMMENDED | APPROVED

KNOXVILLE 11-29-77 | 88 | E | 5GW1740-EG-11 | R5

RECORD DRAWING AS CONSTRUCTED